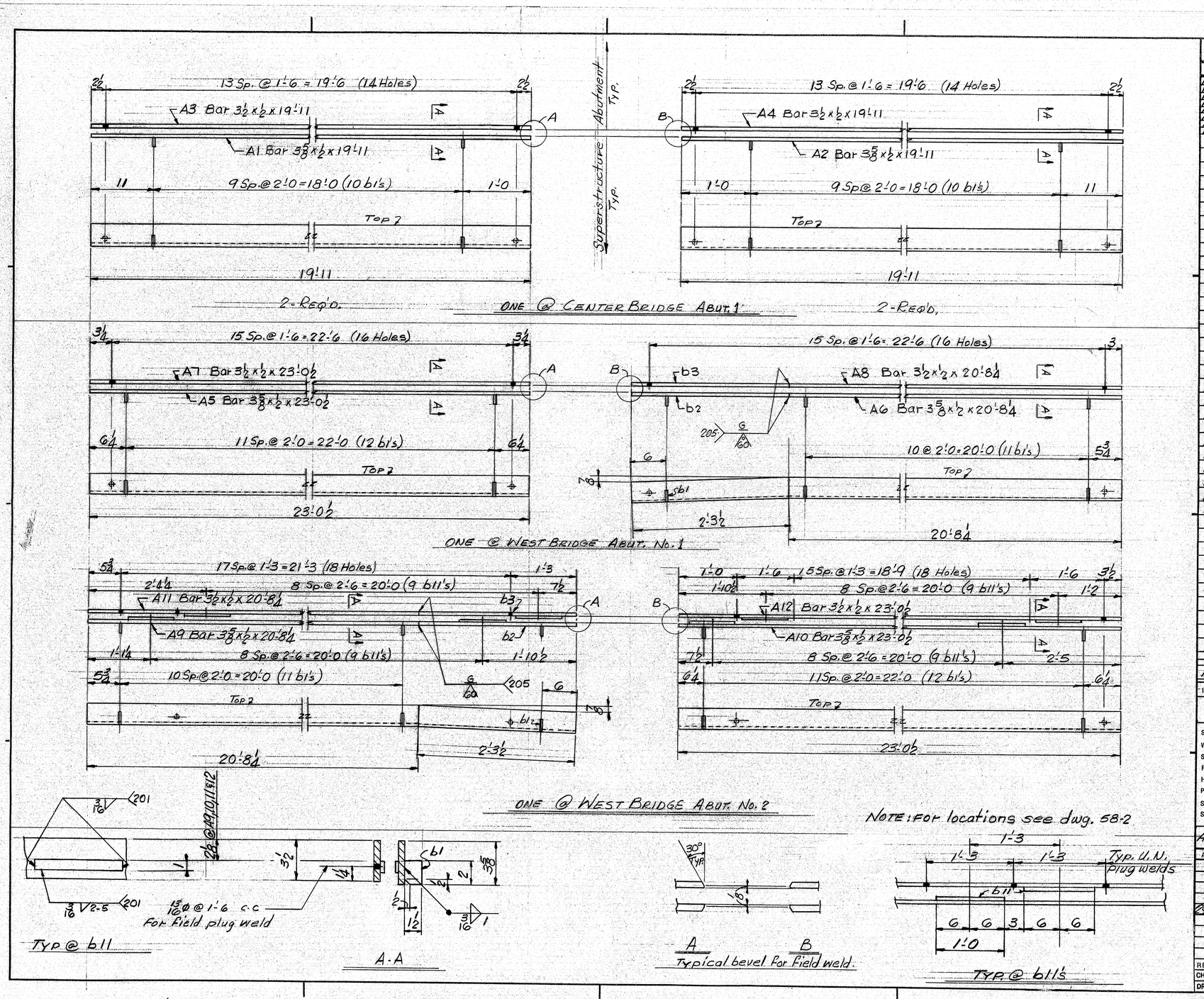

SHIP MARK	NO.	MARK	SHAPE	LENGTH		WT.	ITEM NO.	REMARKS
A1	1		Bar 3⅜ x ½	19	11		B-1	
A1A	1		Bar 3⅜ x ½	19	11		B-1	
A2	1		Bar 3½ x ½	19	11		F-1	
A2A	1		Bar 3½ x ½	19	11		F-1	
A3	1		Bar 3½ x ½	19	11		A-1	
A3A	1		Bar 3½ x ½	19	11		A-1	
A4	1		Bar 3½ x ½	19	11		E-1	
A4A	1		Bar 3½ x ½	19	11		E-1	
A5	1		Bar 3⅜ x ½	23	0½		A-1	
A6	1		Bar 3⅜ x ½	20	8¼		A-1	
A7	1		Bar 3½ x ½	23	0½		E-1	
A8	1		Bar 3½ x ½	20	8¼		E-1	
A9	1		Bar 3⅜ x ½	20	8¼		A-1	
A10	1		Bar 3⅜ x ½	23	0½		A-1	
A11	1		Bar 3½ x ½	20	8¼		E-1	
A12	1		Bar 3½ x ½	23	0½		E-1	
A13	1		Bar 3⅜ x ½	20	6		C-1	
A14	1		Bar 3⅜ x ½	18	6½		C-1	
A15	1		Bar 3½ x ½	20	6		G-1	
A16	1		Bar 3½ x ½	18	6½		G-1	
A17	1		Bar 3⅜ x ½	18	6½		C-1	
A18	1		Bar 3⅜ x ½	20	6		C-1	
A19	1		Bar 3½ x ½	18	6½		G-1	
A20	1		Bar 3½ x ½	20	6		G-1	
A21	1		Bar 5 x ½	23	8¾		J-1	
A22	1		Bar 5 x ½	21	3¾		J-1	
A23	1		Bar 4¾ x ½	23	8¾		H-1	
A24	1		Bar 4¾ x ½	21	3¾		H-1	
A25	1		Bar 5 x ½	21	3¾		J-1	
A26	1		Bar 5 x ½	23	8¾		J-1	
A27	1		Bar 4¾ x ½	21	3¾		H-1	
A28	1		Bar 4¾ x ½	23	8¾		H-1	
A29	3		Bar 5 x ½	19	0¾		K-1	
A30	3		Bar 5 x ½	21	2¾		K-1	
A31	3		Bar 4¾ x ½	19	0¾		I-1	
A32	3		Bar 4¾ x ½	21	2¾		I-1	
b1	132		Bar 1½ x ⅜	0	2		D-1	
	2	b2	Bar 3⅜ x ½	2	3 1/16		A-1	
	2	b3	Bar 3½ x ½	2	3 1/16		E-1	
	2	b4	Bar 3½ x ½	2	2 1/16		C-1	
	2	b5	Bar 3⅜ x ½	2	2 1/16		G-1	
	2	b6	Bar 5 x ½	2	4 1/16		J-1	
	2	b7	Bar 4¾ x ½	2	4 1/16		H-1	
	3	b8	Bar 4¾ x ½	2	1 1/16		I-1	
	3	b9	Bar 5 x ½	2	1 1/16		K-1	
b10	114		Bar 2¾ x ⅜	0	2¾		L-1	
	296	b11	Bar 1 x ⅜					
	32	b12	Bar 1 x ⅜	1	0		M-1	
Above B.O.M.	Covers Dwg.		58-2, 3	&			plsp.	

IT. NO. 2004-7801 / 2004-7802 — BR. NO. — PROJ. NO. 70I-95-7 (79) / 70I-70IC 95-7 (80)

FOR APPROVAL [X] **FOR FILES & FIELD** [X]

STEEL: ASTM. [X] A36 [ ] A572 GR. [ ] A588 GR. [ ] Unless Noted
WELDING ELECTRODE: [ ] E70 [X] See Welding Proc. [ ] None
SHOP CONN: [ ] Bolted [X] Welded [ ] None
FIELD CONN: [ ] Bolted [X] Welded [ ] None
HOLES: [X] 13/16 [ ] 15/16 [ ] [ ] Unless Noted [ ] None
PAINT: [X] None [ ] Shopcoat [ ] Galv. After Fab. [ ] As Noted
SPECIAL PAINT:
SPECIAL CLEANING: [X] Blast Clean [ ] None SSPC-SP10

ARMORED JOINTS @ WEST & CENTER BRIDGE

APPROVED: 1-17-79

PRINT DIST.		
2	12-1-78	APP.
3	1-26-79	FAB.
2	1-26-79	F&F.
2 sp/as	1-5-78	FA

Bancroft & Martin Inc.
South Portland, Maine 04106

JOB: REHABILITATION OF FOUR BRIDGE DECKS, HAMDEN, ME

CUSTOMER: REED & REED
DESIGNER: ME. D.O.T. BRIDGE DIV.

REV. △	ORDER NO.	JOB NO.	DRAWING NO.	REV.
CHECKED				
DRAWN RGM		8-74	58-1	△

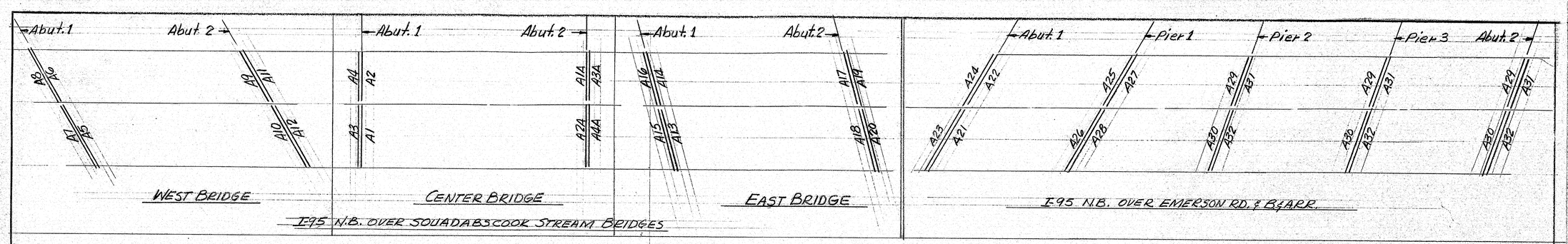

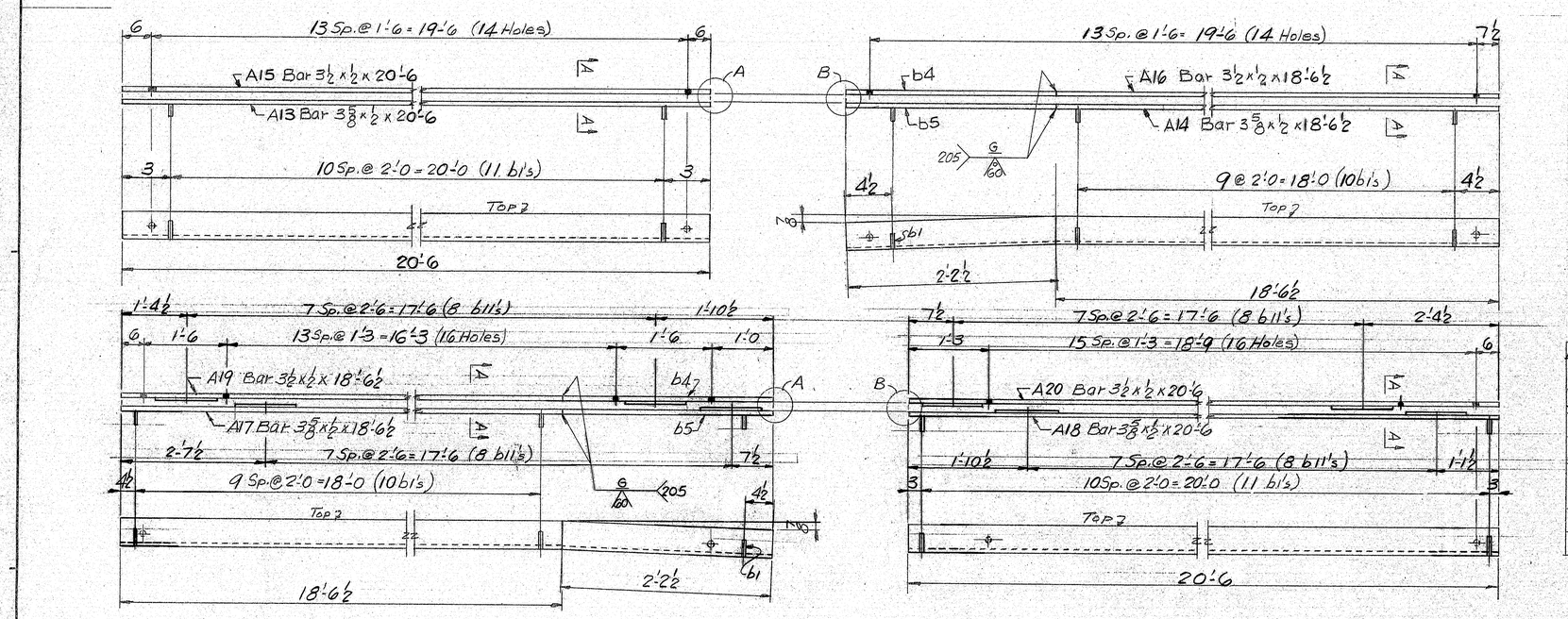

FOR REED & REED USE ARMORED JOINT SEALS		
DEPTH	I-95 N.B. OVER SQUADABSCOOK STREAM LOCATION	SEAL	"X" @ 45°
3⅛	ABUT. 1; WEST, CENTER & EAST BRIDGES	D.S. BROWN H2500	1 9/16
2⅛	ABUT. 2; WEST & EAST BRIDGES	ACMASEAL J162	1⅛
2⅝	ABUT. 2; CENTER BRIDGE	ACMASEAL J200	1 5/16
	I-95 N.B. OVER EMERSON MILL ROAD & B.&A. RAILROAD LOCATION	SEAL	
2⅝	ABUT. 1 & PIERS 1, 2 & 3	ACMASEAL J200	1 5/16
2⅛	ABUT. 2	ACMASEAL J162	1⅛

B.O.M. & General notes on dwg. 58-1

TQI-95-7 (79) TQI-TQIG 95-7 (80)

FRAMING PLAN FOR ALL JOINTS

ARMORED JOINTS EAST BRIDGE

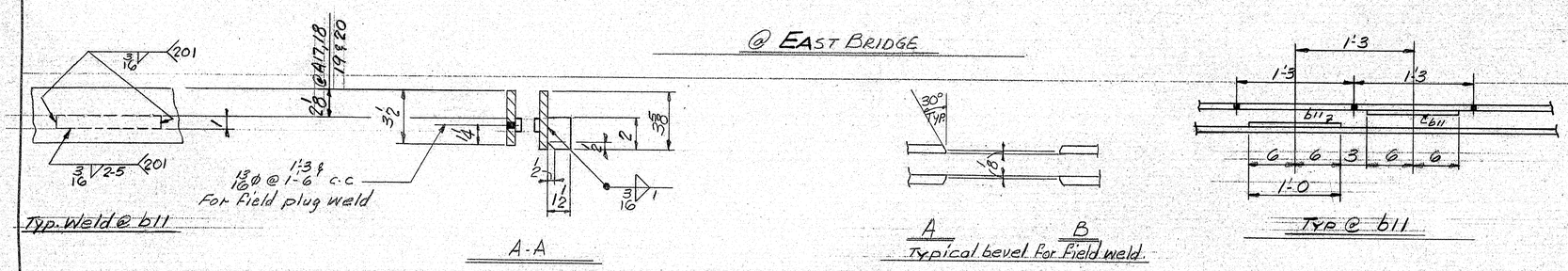

APPROVED: 1-17-79		
PRINT DIST.		
2	12-1-78	APP.
3	1-26-79	FAB.
2	1-26-79	F&F.
2 Sepas	1-5-78	F.A.
REV. △		
CHECKED		
DRAWN		R&M

Bancroft & Martin Inc.
South Portland, Maine 04106

JOB: REHABILITATION OF FOUR BRIDGE DECKS, HAMDEN, ME.

CUSTOMER: REED & REED

DESIGNER: ME. D.O.T. BRIDGE DIV.

ORDER NO.	JOB NO.	DRAWING NO.	REV.
	8-74	58-2	△

160-75

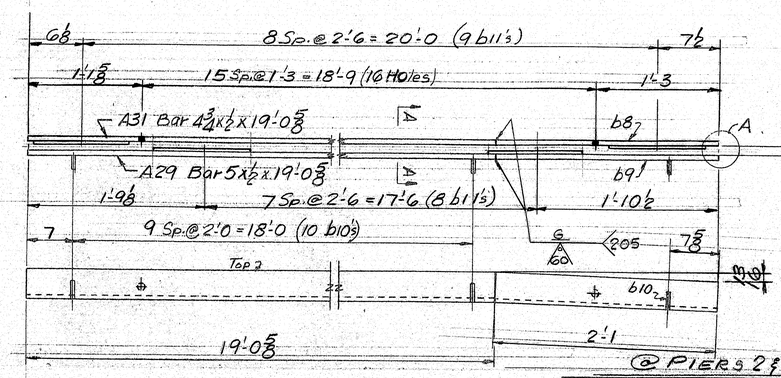

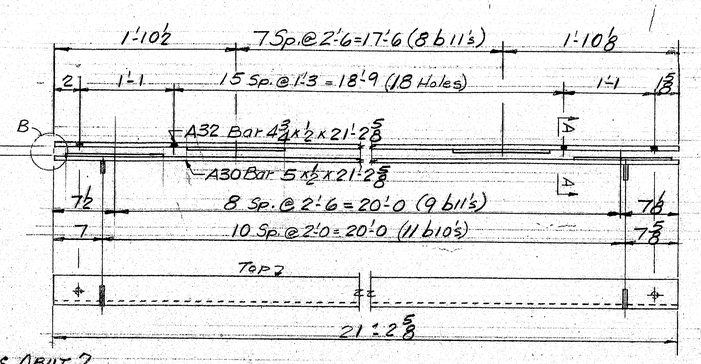

@ PIERS 2 & 3 & ABUT. 2
3 OF EACH

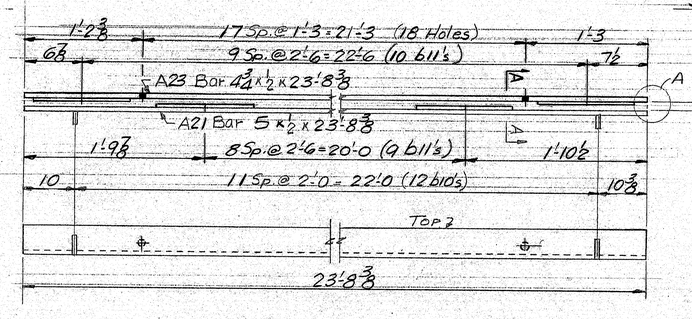

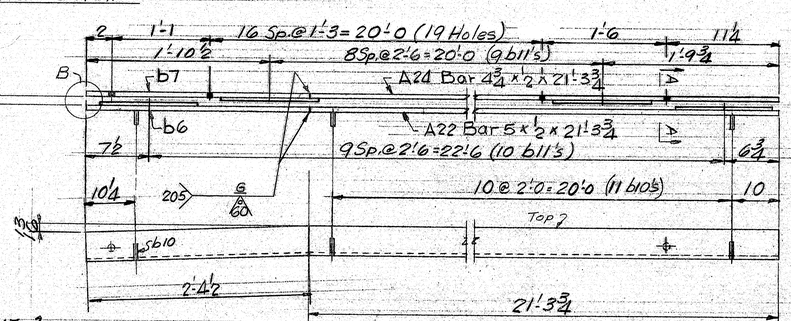

@ ABUT. 1
ONE OF EACH

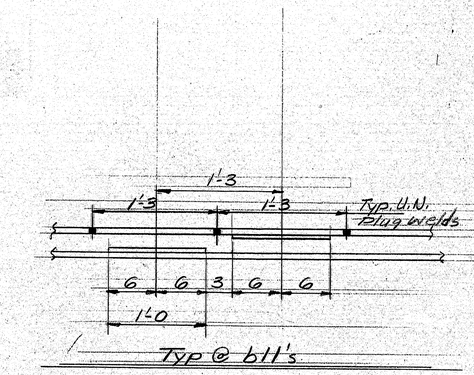

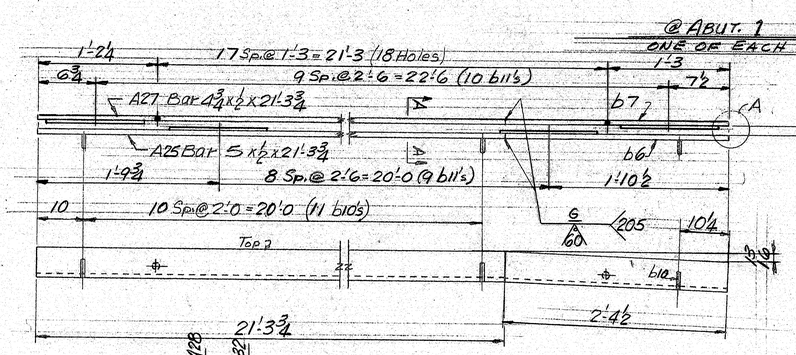

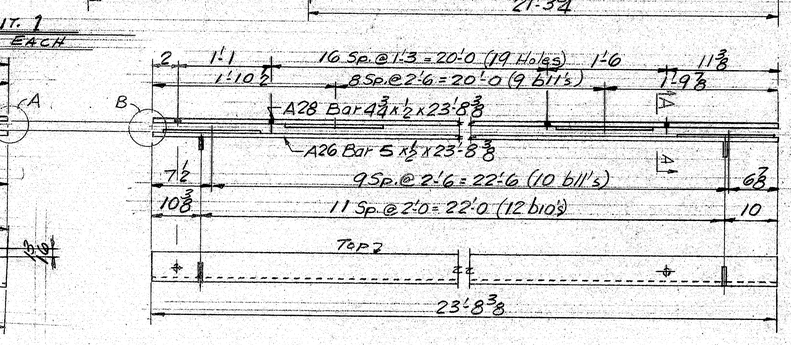

@ PIER 1
ONE OF EACH

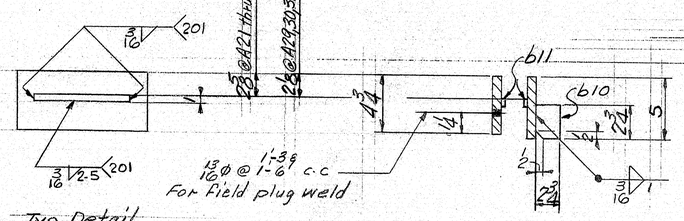

Typ. Detail @ b11

A-A

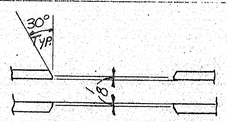

A B
Typical bevel For Field weld.

B.O.M. & General notes on dwg. 58-1
For locations see dwg. 58-2
RDI-95-7 (79) TDI-TDIG 95-7 (80)

ARMORED JOINTS @ I95 N.B. OVER EMERSON RD. & BIARR.

ALL CONNECTIONS DETAILED ON THIS DRAWING REPRESENT BANCROFT & MARTIN INC. STANDARDS. IN APPROVING THIS DRAWING FOR FABRICATION, THE ARCHITECT AND/OR ENGINEER ASSUMES THE RESPONSIBILITY FOR THE STRUCTURAL INTEGRITY OF ALL CONNECTIONS SHOWN.

APPROVED: 1-17-79			
PRINT DIST.			
2	12-1-78	APP.	
3	1-26-79	FAB.	
2	1-26-79	F&F.	
2 Copies	1-5-78	F.A.	
REV. △			
CHECKED			
DRAWN		RSM	

Bancroft & Martin Inc.
South Portland, Maine 04106

JOB: REHABILITATION OF FOUR BRIDGE DECKS, HAMDEN, ME.

CUSTOMER: REED & REED

DESIGNER: ME. D.O.T. BRIDGE DIV.

ORDER NO.	JOB NO.	DRAWING NO.	REV.
	8-74	58-3	△

Harlan P. Seiler Co., Inc.

160-76

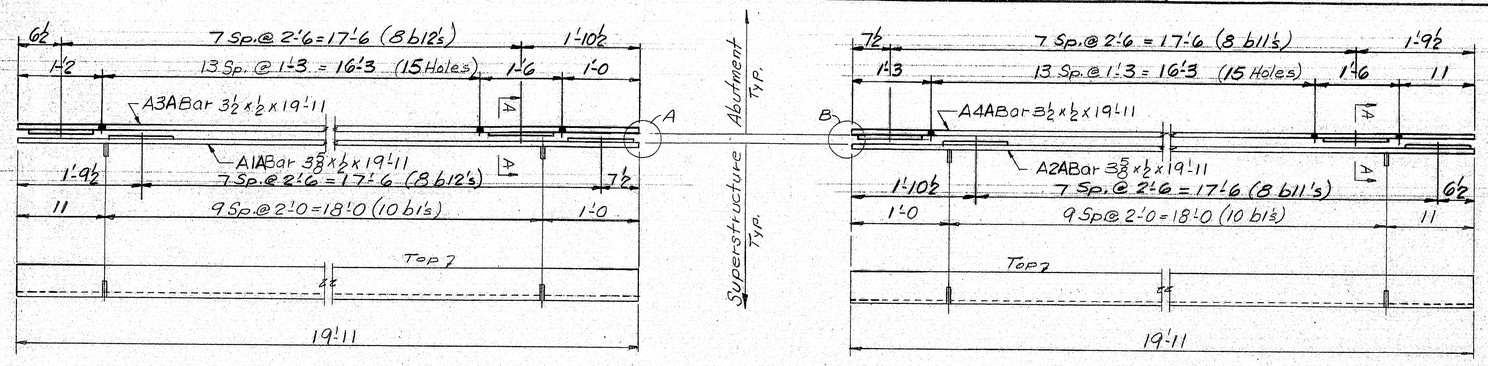

ONE @ CENTER BRIDGE ABUT. 2

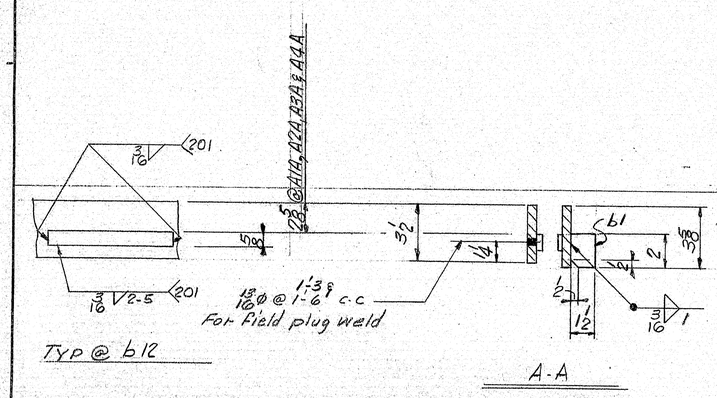

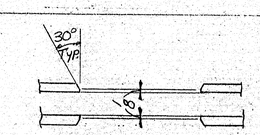

Typical bevel For Field weld.

NOTE: For locations see dwg. 58-2

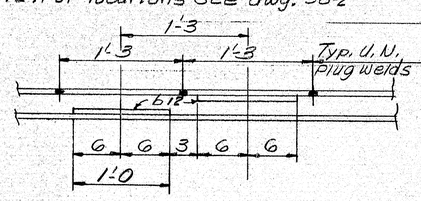

TYP. @ bl2's

B.O.M. & General notes on dwg. 58-1

TQI-95-7 (79)

TQI-TQIG 95-7 (80)

ARMORED JOINTS @ CENTER BRIDGE

APPROVED: 1-17-79		
PRINT DIST.		
2	12-1-78	APP.
3	1-26-79	FAB.
2	1-26-79	F&F.
2 copies	1-5-78	F.A.
REV. △		
CHECKED		
DRAWN		RGM

Bancroft & Martin Inc
South Portland, Maine 04106

JOB: REHABILITATION OF FOUR BRIDGE DECKS, HAMDEN, ME

CUSTOMER: REED & REED

DESIGNER: ME. D.O.T. BRIDGE DIV.

ORDER NO.	JOB NO.	DRAWING NO.	REV.
	8-74	58-4	△

160-77

Harlan F. Spitler Co., Inc.