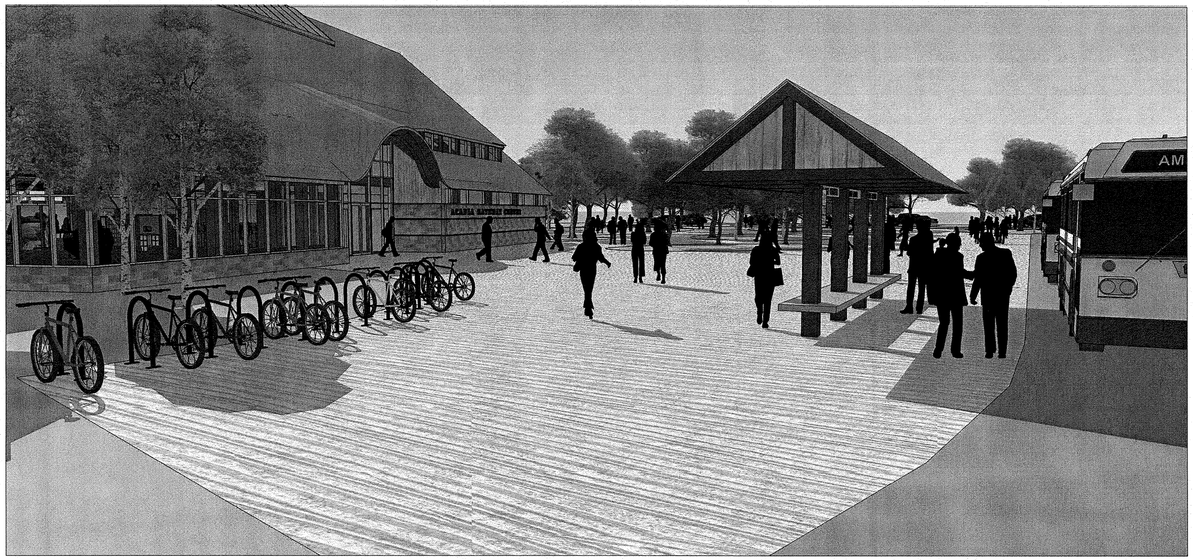

ACADIA GATEWAY CENTER

INTERMODAL AND WELCOME CENTER

Route 3 Trenton, ME 04605

WIN NO: 017163.03
100% SUBMISSION
JANUARY 17, 2022

STATE OF MAINE
DEPARTMENT OF TRANSPORTATION

DATE APPROVED: _____

COMMISSIONER: _____ 11-8-22

CHIEF ENGINEER: _____ 11-7-2022

Locus Map

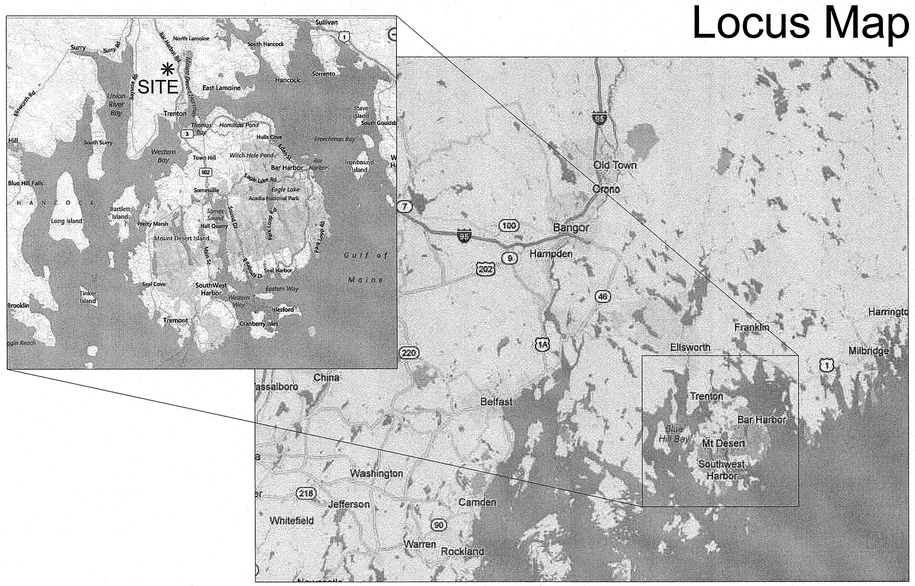

PROJECT TEAM

OWNER: **State of Maine**
Department of Transportation
16 State House Station
Augusta, ME 04333

ARCHITECT: **AECOM Technical Services, Inc.**
1 Federal Street, 8th Floor
Boston, MA 02110

CIVIL ENGINEERING: **Gorrill Palmer Consulting Engineers**
707 Sable Oaks Drive #30
South Portland, ME 04106

MEP/FP ENGINEERING: **Allied Engineering**
160 Veranda Street
Portland, ME 04103

LANDSCAPE ARCHITECTURE: **Coplon Associates**
112 Cottage Street
Bar Harbor, ME 04106

CODE CONSULTING: **Code Red Consultants**
154 Turnpike Road, Suite 200
Southborough, MA 01772

GEOTHERMAL ENGINEERING: **WellSpring Geothermal**
161 Mountain Road
Nottingham, NH 03290

ARCHITECTURAL SPECIFICATIONS: **Kalin Associates**
21 Eliot Street
Natick, MA 01760

PROJECT KEY PLAN

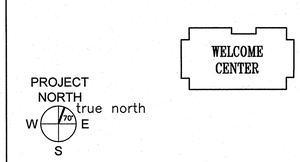

AECOM
1 FEDERAL STREET, 8TH FLOOR
BOSTON, MA 02110
617.723.1700
www.aecom.com

STATE OF MAINE
DEPARTMENT OF TRANSPORTATION

	DATE
FED PIN NO: NA	
WIN NO: 017163.03	

LICENSED ARCHITECT KAYLA MICHELLE WENGLER No. 5292 STATE OF MAINE

SIGNATURE	Kayla Wengler
ARCH. LIN. NUMBER	ARC5292
DATE	JANUARY 17, 2022

PROJECT INFORMATION	
PROGRAM	–
PROJECT MANAGER	–
DESIGNER	AECOM
CONSULTANT	–
PROJECT RESIDENT	–
CONTRACTOR	–
PROJECT COMPLETION DATE	–

MAINE DEPARTMENT OF TRANSPORTATION
ACADIA GATEWAY FACILITY
INTERMODAL AND WELCOME CENTER

COVER SHEET

SHEET NUMBER
GA000

\\na.aecomnet.com\lfs\AMER\Boston-USBOS01\DCS\Projects\TRN\60653001_MaineDOT_Acadia_Gateway\900_CAD_GIS\910_CAD\Sheet\GA000.dwg Nov 02, 2022 - 7:25pm

DRAWING INDEX

GENERAL

GA000	COVER
GA001	DRAWING INDEX

CIVIL

C001	SITE COVER SHEET
C002	SITE GENERAL NOTES AND LEGEND
C100	OVERALL CIVIL SITE PLAN
C102	CIVIL SITE PLAN – EAST
C103	CIVIL SITE PLAN – WEST
C201	OVERALL UTILITY PLAN
C202	UTILITY PLAN – EAST
C203	UTILITY PLAN – WEST
C301	OVERALL GRADING PLAN
C302	GRADING PLAN – EAST
C303	GRADING & DRAINAGE PLAN – WEST
C304	DRAINAGE PLAN – EAST
C305	BUS LOOP PLAN AND PROFILE
C307	SANITARY SEWER AND WATER PROFILE
C308	STORM DRAIN PROFILES – 1
C309	STORM DRAIN PROFILES – 2
C401	SITE DETAILS
C402	UTILITY DETAILS
C403	UTILITY DETAILS
C404	UTILITY DETAILS
C405	GRASSED UNDERDRAINED SOIL FILTER PLAN AND DETAILS
C406	WET POND PLAN AND DETAILS
C501	ROUTE 3 FLASHING BEACON PLAN

GEOTHERMAL

G001	GEOTHERMAL EARTH COUPLING
G002	GEOTHERMAL DETAILS
G003	GEOTHERMAL GSHX SITE LAYOUT
G004	GEOTHERMAL TESTING METHODS

LANDSCAPE

L101	PLAZA MATERIALS PLAN
L102	PLAZA LAYOUT PLAN
L103	PLAZA PAVING LAYOUT PLAN
L104	PLAZA GRADING PLAN
L201	SITE LOAM DEPTH PLAN
L202	SITE TREE PLANTING PLAN
L203	PARKING LOT PLANTING PLAN
L204	PLAZA PLANTING PLAN
L205	PLANTING ENLARGEMENTS
L206	PLANTING NOTES, DETAILS & SCHEDULE
L301	SITE DETAILS
L302	SITE DETAILS
L303	SITE SECTIONS
I101	IRRIGATION PLAN
I102	IRRIGATION PLAN
I201	IRRIGATION DETAILS

ARCHITECTURAL

A001	SYMBOLS AND ABBREVIATIONS
A002	ARCHITECTURAL NOTES
A003	CODE SHEET AND FIRE RATING PARTITION PLANS
A004	CODE SHEET AND FIRE RATING PARTITION PLANS
A005	TYPICAL MOUNTING HEIGHTS
A101	SITE PLAN
A102	SITE ELEMENTS DETAILS
A103	EV CHARGING ENCLOSURE PLAN AND DETAILS
A201	BASEMENT PLAN
A202	FIRST FLOOR PLAN
A203	MEZZANINE PLAN
A204	ATTIC FLOOR PLAN
A205	ROOF PLAN
A206	FIRST FLOOR FURNITURE PLAN
A210	BUS CANOPY AND INFORMATION KIOSKS
A301	EXTERIOR ELEVATIONS I
A301a	EXTERIOR ELEVATIONS I GEOMETRY
A302	EXTERIOR ELEVATIONS II
A310	BUILDING SECTIONS I
A311	BUILDING SECTIONS II
A312	BUILDING SECTIONS III
A401	WALL SECTIONS I
A402	WALL SECTIONS II
A403	WALL SECTIONS III
A404	WALL SECTIONS IV
A405	WALL SECTIONS V
A406	WALL SECTIONS VI
A510	STAIR 1 – FLOOR PLANS
A511	STAIR 1 – SECTIONS I
A512	STAIR 1 – SECTIONS II
A517	STAIR 1 – SHAFT DETAILS
A518	STAIR 1 – DETAILS I
A519	STAIR 1 – DETAILS II
A520	STAIR 1 – DETAILS III
A521	STAIR 1 – DETAILS IV
A601	BASEMENT REFLECTED CEILING PLAN
A602	FIRST FLOOR REFLECTED CEILING PLAN
A603	MEZZANINE REFLECTED CEILING PLAN
A604	REFLECTED CEILING DETAILS I
A605	REFLECTED CEILING DETAILS II
A611	BASEMENT FINISH FLOOR PLAN
A612	FIRST FLOOR FINISH FLOOR PLAN
A613	MEZZANINE FINISH FLOOR PLAN
A614	FINISH SCHEDULE
A701	ENLARGED PLANS I
A702	ENLARGED PLANS II
A703	ENLARGED PLANS III
A710	ROOM ELEVATIONS I
A711	ROOM ELEVATIONS II
A712	ROOM ELEVATIONS III
A714	ROOM ELEVATIONS V
A715	ROOM ELEVATIONS VI
A720	MILLWORK I
A721	MILLWORK II
A722	MILLWORK III
A723	MILLWORK IV
A724	MILLWORK V
A725	MILLWORK VI
A726	MILLWORK VII
A727	MILLWORK VIII
A728	MILLWORK IX
A801	ROOM FINISH SCHEDULE
A802	DOOR AND LOUVER SCHEDULES
A803	DOOR, DOOR FRAME AND LOUVER ELEVATIONS
A804	DOOR DETAILS I
A805	DOOR DETAILS II
A806	DOOR DETAILS III
A807	LOUVER AND HATCH DETAILS
A810	PLAN DETAILS I
A811	PLAN DETAILS II
A812	PLAN DETAILS III
A813	PLAN DETAILS IV
A814	PLAN DETAILS V
A815	PLAN DETAILS VI
A816	SECTION DETAILS I
A817	SECTION DETAILS II
A820	CURTAINWALL ELEVATIONS I
A821	CURTAINWALL ELEVATIONS II
A822	CURTAINWALL ELEVATIONS III
A823	CURTAINWALL ELEVATIONS IV
A824	STEEL STOREFRONT DETAILS
A825	STEEL STOREFRONT DETAILS
A830	PARTITION TYPES I
A831	PARTITION TYPES II AND DETAILS
A832	MISCELLANEOUS DETAILS
A840	SKYLIGHT DETAILS
A841	ROOF DETAILS I
A842	ROOF DETAILS II
A843	ROOF DETAILS III

STRUCTURAL

S000	STRUCTURAL – GENERAL INFORMATION
S001	STRUCTURAL – TYPICAL DETAILS
SB100	STRUCTURAL – FOUNDATION PLAN
SB500	STRUCTURAL – FOUNDATION DETAILS
SF100	STRUCTURAL – FIRST FLOOR FRAMING PLAN
SF101	STRUCTURAL – MEZZANINE FRAMING PLAN
SF102	STRUCTURAL – MISCELLANEOUS FRAMING PLANS
SF103	STRUCTURAL – ROOF FRAMING PLAN
SF104	STRUCTURAL – ROOF LOADING PLAN
SF200	STRUCTURAL – FRAMING ELEVATIONS
SF201	STRUCTURAL – FRAMING ELEVATIONS
SF202	STRUCTURAL – FRAMING ELEVATIONS
SF500	STRUCTURAL – DETAILS
SF501	STRUCTURAL – DETAILS
SF502	STRUCTURAL – DETAILS
SF503	STRUCTURAL – DETAILS
SF510	STRUCTURAL – TIMBER FRAME CONNECTION DETAILS
SF511	STRUCTURAL – TIMBER FRAME CONNECTION DETAILS
SF512	STRUCTURAL – TIMBER FRAME CONNECTION DETAILS
SF600	STRUCTURAL – BUS SHELTER FRAMING PLANS AND DETAILS
SF601	STRUCTURAL – INFO KIOSK FRAMING PLANS AND DETAILS
SF602	STRUCTURAL – EV CHARGING ENCLOSURE FRAMING PLANS AND DETAILS

FIRE PROTECTION

FX001	FIRE SPRINKLER PLAN – NOTES AND DETAILS
FX100	FIRE SPRINKLER PLAN – BASEMENT FLOOR
FX101	FIRE SPRINKLER PLAN – FIRST FLOOR
FX102	FIRE SPRINKLER PLAN – MEZZANINE

PLUMBING

PL000	PLUMBING & HVAC NOTES, LEGEND & ABBREVIATIONS
PL100	PLUMBING PLAN – BASEMENT – BELOW SLAB
PL101	PLUMBING PART PLANS – BASEMENT
PL102	PLUMBING PLAN – FIRST FLOOR
PL103	ENLARGED PLUMBING PART PLANS – FIRST FLOOR
PL104	PLUMBING PLAN – MEZZANINE
PL600	PLUMBING SCHEDULES

MECHANICAL

MH100	MECHANICAL PLAN – BASEMENT
MP100	MECHANICAL PIPING PLAN – BASEMENT
MH101	MECHANICAL PLAN – 1ST FLOOR
MP101	MECHANICAL PIPING PLAN – 1ST FLOOR
MH102	MECHANICAL PLAN – 2ND FLOOR
MP102	MECHANICAL PIPING PLAN – 2ND FLOOR
MH103	MECHANICAL PLAN – 2ND FLOOR
MH600	MECHANICAL SCHEDULES
MH601	MECHANICAL SCHEDULES

ELECTRICAL

E000	ELECTRICAL ABBREVIATIONS, LEGENDS & GENERAL NOTES
ES100	ELECTRICAL SITE PLAN – PART PLAN WEST
ES101	ELECTRICAL SITE PLAN – PART PLAN WEST
ES102	ENLARGED PART SITE PLAN – ELECTRICAL SITE DETAILS
EL100	BASEMENT – LIGHTING PLAN
EL101	FIRST FLOOR VISITOR CENTER – LIGHTING PLAN
EL102	MEZZANINE VISITOR CENTER – LIGHTING PLAN
EL600	LUMINAIRE SCHEDULES
EP100	BASEMENT – POWER PLAN
EP101	FIRST FLOOR VISITOR CENTER – POWER PLAN
EP102	MEZZANINE VISITOR CENTER– POWER PLAN
EP500	POWER RISER DIAGRAM
EP600	ELECTRICAL SCHEDULES
EP601	ELECTRICAL SCHEDULES
EP602	ELECTRICAL SCHEDULES
EP603	ELECTRICAL SCHEDULES
EY100	BASEMENT – SYSTEMS PLAN
EY101	FIRST FLOOR VISITOR CENTER – SYSTEMS PLAN
EY102	MEZZANINE VISITOR CENTER – SYSTEMS PLAN
LP100	LIGHTNING PROTECTION PLAN AND DETAILS

PHOTOVOLTAIC

PV100	ELECTRICAL ABBREVIATIONS, LEGENDS & GENERAL NOTES

SIGNAGE

SG101	SYMBOLS, TYPOGRAPHY, AND PAINT FINISHES
SG102	SIGNAGE MESSAGE SCHEDULE PART 1
SG103	SIGNAGE MESSAGE SCHEDULE PART 2
SG104	SIGNAGE MESSAGE SCHEDULE PART 3
SG105	SIGNAGE MESSAGE SCHEDULE PART 4
SG106	EXTERIOR SIGNAGE LOCATION PLAN
SG107	EXTERIOR SIGNAGE DETAIL I – GATEWAY AND WELCOME SIGNS
SG108	EXTERIOR SIGNAGE DETAIL II – BUILDING, BUS SHELTER, KIOSKS
SG109	EXTERIOR SIGNAGE DETAIL III – BUILDING & INFO CENTER
SG110	EXTERIOR SIGNAGE DETAIL IV – PARKING AREA
SG111	EXTERIOR SIGNAGE DETAIL V – PARKING AREA
SG112	EXTERIOR SIGNAGE DETAIL VI – HIGHWAY
SG113	EXTERIOR SIGNAGE DETAIL VII – REGULATORY & PARKING ID
SG114	EXTERIOR SIGNAGE DETAIL VIII – PARKING ID
SG115	EXTERIOR SIGNAGE DETAIL IX – PARKING ID
SG116	INTERIOR SIGNAGE PLAN I – BASEMENT LEVEL
SG117	INTERIOR SIGNAGE PLAN II – FIRST FLOOR
SG118	INTERIOR SIGNAGE PLAN III – MEZZANINE LEVEL
SG119	INTERIOR SIGNAGE DETAIL I – OVERHEAD IDENTIFICATION
SG120	INTERIOR SIGNAGE DETAIL II – ROOM ID
SG121	INTERIOR SIGNAGE DETAIL III – ROOM ID
SG122	INTERIOR SIGNAGE DETAIL IV – ACOUSTIC BANNERS

AECOM
1 FEDERAL STREET, 8TH FLOOR
BOSTON, MA 02110
617.723.1700
www.aecom.com

STATE OF MAINE
DEPARTMENT OF TRANSPORTATION

DATE

FED PIN NO: NA

WIN NO: 017163.02 & 017163.03

LICENSED ARCHITECT KARLA MICHELLE WENGLER No. 5292 STATE OF MAINE

SIGNATURE

ARCH. LIN. NUMBER ARC5292

DATE JANUARY 17, 2022

PROJECT	INFORMATION
PROGRAM	-
PROJECT MANAGER	-
DESIGNER	AECOM
CONSULTANT	-
PROJECT RESIDENT	-
CONTRACTOR	-
PROJECT COMPLETION DATE	-

MAINE DEPARTMENT OF TRANSPORTATION
ACADIA GATEWAY FACILITY
INTERMODAL AND WELCOME CENTER

DRAWING INDEX

SHEET NUMBER
GA001

\\na.aecomnet.com\lfs\AMER\Boston-USBOS01\DCS\Projects\TRN\60653001_MaineDOT_Acadia_Gateway\900_CAD_GIS\910_CAD\Sheet\GA001.dwg Oct 30, 2022 - 7:13pm

ACADIA GATEWAY CENTER
TRENTON, MAINE
HANCOCK COUNTY

JANUARY 17, 2022

INDEX OF SHEETS

C001 – COVER SHEET
C002 – SITE GENERAL NOTES AND LEGEND
C100 – OVERALL CIVIL SITE PLAN
C102 – CIVIL SITE PLAN – EAST
C103 – CIVIL SITE PLAN – WEST
C201 – OVERALL UTILITY PLAN
C202 – UTILITY PLAN – EAST
C203 – UTILITY PLAN – WEST
C301 – OVERALL GRADING PLAN
C302 – GRADING PLAN – EAST
C303 – GRADING & DRAINAGE PLAN – WEST
C304 – DRAINAGE PLAN – EAST
C305 – BUS LOOP PLAN
C307 – SANITARY SEWER AND WATER PROFILE
C308 – STORM DRAIN PROFILES – 1
C309 – STORM DRAIN PROFILES – 2
C401 – SITE DETAILS
C402 – UTILITY DETAILS
C403 – UTILITY DETAILS
C404 – UTILITY DETAILS
C405 – GRASSED UNDERDRAINED SOIL FILTER PLAN AND DETAILS
C406 – WET POND PLAN AND DETAILS
C501 – ROUTE 3 SIGNAL PLAN

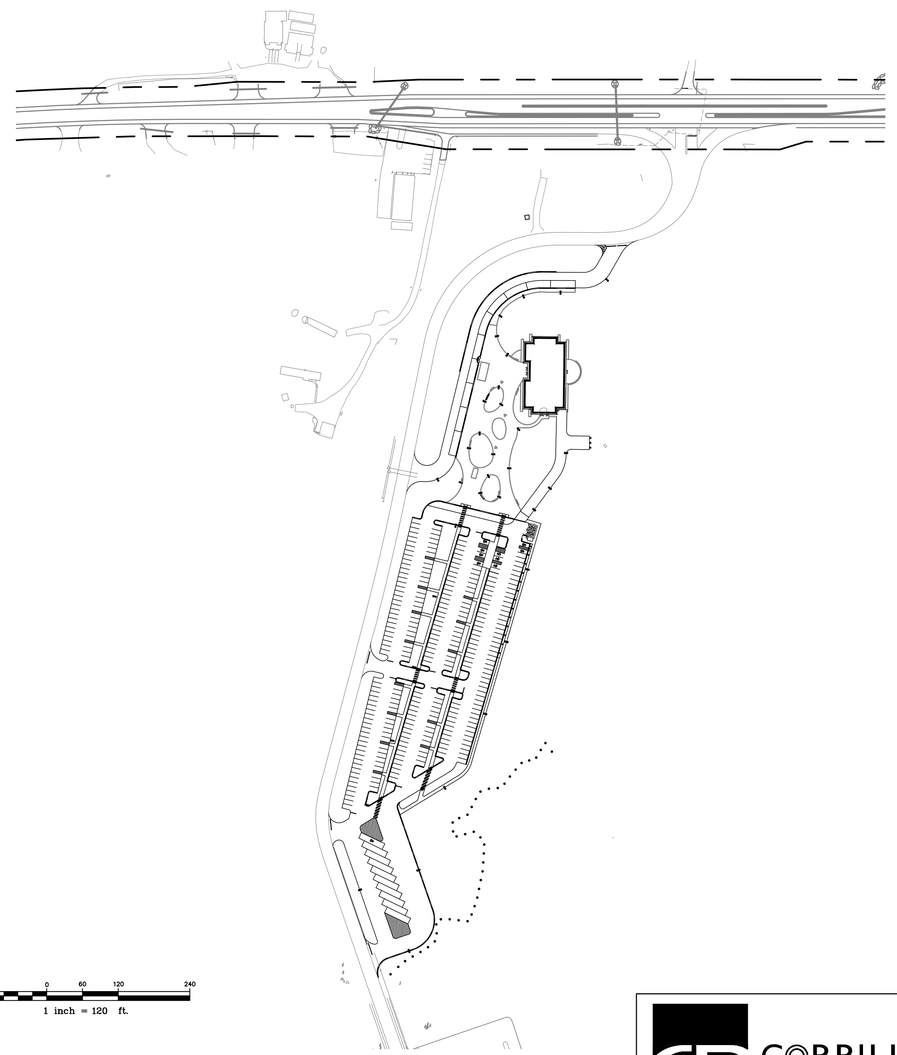

NOTE:
ALL WORK CONTEMPLATED UNDER THIS CONTRACT SHALL BE GOVERNED BY AND BE IN CONFORMITY WITH THE MAINEDOT STANDARD SPECIFICATIONS (REVISION OF MARCH 2020) AND THE PROJECT SPECIFICATIONS. IN THE EVENT OF A CONFLICT BETWEEN THE SPECIFICATIONS, THE STRICTER REQUIREMENT SHALL APPLY. ALL WORK SHALL ALSO COMPLY WITH THE MAINEDOT STANDARD DETAILS (REVISION OF MARCH 2020) EXCEPT AS MODIFIED BY THE PLANS, PROJECT SPECIFICATIONS AND ANY AND ALL CORRECTIONS, REVISIONS OR ADDITIONS ISSUED BY MAINEDOT.

NOTE:
* MAINTENANCE OF TRAFFIC PER THE MANUAL ON UNIFORM TRAFFIC CONTROL DEVICES (MUTCD 2009 EDITION).
* CONTRACTOR SHALL USE THE B.M.P. (BEST MANAGEMENT PRACTICES FOR EROSION AND SEDIMENT CONTROL) AS A MINIMUM STANDARD.

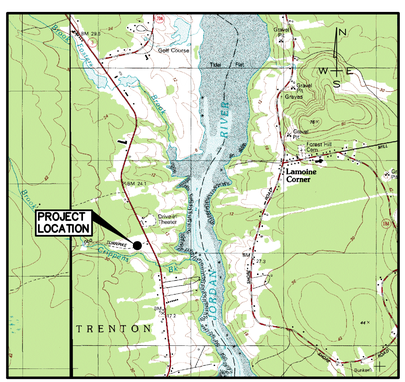

LOCATION MAP

A PORTION OF HANCOCK COUNTY

120 0 60 120 240
1 inch = 120 ft.

PROJECT KEY PLAN

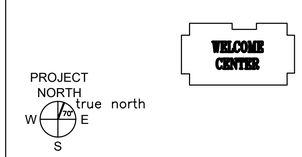

GORRILL PALMER
Relationships. Responsiveness. Results.
www.gorrillpalmer.com
207.772.2515

AECOM
1 FEDERAL STREET, 8TH FLOOR
BOSTON, MA 02110
617.723.1700
www.aecom.com

STATE OF MAINE
DEPARTMENT OF TRANSPORTATION

DATE

FED PIN NO: NA
WIN NO: 017163.02 & 017163.03

STATE OF MAINE DOUGLAS REYNOLDS 10/31/22 LICENSED PROFESSIONAL ENGINEER

SIGNATURE
ENG. LIN. NUMBER 6251
DATE JANUARY 17, 2022

PROJECT INFORMATION	
PROGRAM	–
PROJECT MANAGER	–
DESIGNER	AECOM
CONSULTANT	–
PROJECT RESIDENT	–
CONTRACTOR	–
PROJECT COMPLETION DATE	–

MAINE DEPARTMENT OF TRANSPORTATION
ACADIA GATEWAY FACILITY
INTERMODAL AND WELCOME CENTER

SITE COVER SHEET

SHEET NUMBER
C001

U:\1826.05_AECOM_Acadia Gateway Center_2021 Construction Documents\Z - CAD\DWG\1826-05-COVER.dwg Oct 31, 2022 - 10:10am

GENERAL NOTES

GENERAL NOTES

1. TOPOGRAPHIC DATA AND EXISTING CONDITIONS WAS PREPARED BY MAINE DOT.
2. THE CONTRACTOR IS SPECIFICALLY CAUTIONED THAT THE LOCATION AND/OR THE ELEVATION OF THE EXISTING UTILITIES AS SHOWN ON THESE PLANS IS BASED ON RECORDS OF THE VARIOUS UTILITY COMPANIES AND WHERE POSSIBLE MEASUREMENTS TAKEN IN THE FIELD. THIS INFORMATION IS NOT TO BE RELIED ON AS BEING EXACT OR COMPLETE. THE CONTRACTOR MUST CALL THE APPROPRIATE UTILITY COMPANY AND DIG SAFE AT LEAST 72 HOURS PRIOR TO ANY EXCAVATION TO REQUEST EXACT FIELD LOCATION OF UTILITIES. IT SHALL BE THE RESPONSIBILITY OF THE CONTRACTOR TO RELOCATE ALL EXISTING UTILITIES WHICH CONFLICT WITH THE PROPOSED IMPROVEMENTS SHOWN ON THE PLANS.
3. MAINTENANCE OF EROSION CONTROL MEASURES IS OF PARAMOUNT IMPORTANCE TO THE OWNER AND THE CONTRACTOR IS RESPONSIBLE FOR COMPLYING WITH ALL EROSION CONTROL MEASURES SHOWN ON THE PLANS. ADDITIONAL EROSION CONTROL MEASURES SHALL BE INSTALLED IF DEEMED NECESSARY BY ON-SITE INSPECTIONS OF THE OWNER OR THEIR REPRESENTATIVES AT NO ADDITIONAL COST TO THE OWNER.
4. ALL MATERIAL SCHEDULES SHOWN ON THE PLANS ARE FOR GENERAL INFORMATION ONLY. THE CONTRACTOR SHALL PREPARE HIS OWN MATERIAL SCHEDULES BASED UPON HIS PLAN REVIEW. ALL SCHEDULES SHALL BE VERIFIED IN THE FIELD BY THE CONTRACTOR PRIOR TO ORDERING MATERIALS OR PERFORMING WORK.
5. ALL MATERIALS AND CONSTRUCTION METHODS SHALL CONFORM TO MAINE DEPARTMENT OF TRANSPORTATION SPECIFICATIONS, AND/OR THE PROJECT SPECIFICATIONS.
6. WETLAND LOCATIONS SHOWN ON THIS PLAN WERE PROVIDED BY MAINE DOT.

PERMITTING NOTES

1. THIS PROJECT IS SUBJECT TO THE TERMS AND CONDITIONS OF A SITE LOCATION OF DEVELOPMENT ACT – CONDITION COMPLIANCE FROM MAINE DEPARTMENT OF ENVIROMENTAL PROTECTION.
2. THE CONTRACTOR SHALL REVIEW THE ABOVE REFERENCED PERMITS PRIOR TO SUBMITTING A BID FOR THIS PROJECT, AND INCLUDE COSTS AS NECESSARY TO COMPLY WITH THE CONDITIONS OF THESE PERMITS.

LAYOUT NOTES

1. ALL DIMENSIONING, UNLESS NOTED OTHERWISE, IS TO THE FACE OF CURB.
2. OFFSETS TO CATCH BASINS AND MANHOLES ARE TO THE CENTER OF THE FRAME.
3. PIPE LENGTH EQUALS THE CENTER TO CENTER DISTANCES BETWEEN CATCH BASINS AND/OR MANHOLES MINUS ONE-HALF OF THE DIAMETER OF EACH CATCH BASIN OR MANHOLE.
4. PROPERTY LINE AND R.O.W. MONUMENTS SHALL NOT BE DISTURBED BY CONSTRUCTION. IF DISTURBED, THEY SHALL BE RESET TO THEIR ORIGINAL LOCATIONS AT THE CONTRACTOR'S EXPENSE, BY A MAINE LICENSED LAND SURVEYOR.
5. PROPOSED RIGHT OF WAY MONUMENTS AND PROPERTY LINE PINS SHALL BE INSTALLED UNDER THE DIRECTION OF A MAINE LICENSED LAND SURVEYOR.
6. CURB RADII UNLESS OTHERWISE NOTED ON THE PLAN SHALL BE A MINIMUM OF 5'.

UTILITY NOTES

1. ALL WATER UTILITY MATERIALS AND INSTALLATION METHODS SHALL CONFORM TO PROJECT SPECIFICATIONS DISINFECTION OF WATER LINES SHALL CONFORM TO AWWA STANDARD C651, LATEST REVISION.
2. THE LOCATION OF THE PROPOSED UNDERGROUND ELECTRICAL SERVICE IS APPROXIMATE AND THE CONTRACTOR SHALL COORDINATE THE EXACT LOCATION WITH VERSANT POWER.
3. TEST PITS AT ALL UTILITY CROSSINGS SHALL BE COMPLETED TWO WEEKS IN ADVANCE OF THE START OF CONSTRUCTION OR ORDERING OF MATERIALS. TEST PIT INFORMATION SHALL BE PROMPTLY PROVIDED TO ENGINEER FOR REVIEW.

GRADING AND DRAINAGE NOTES

1. UNLESS OTHERWISE NOTED, ALL STORM DRAIN PIPE SHALL BE IN ACCORDANCE WITH MAINE DOT SPECIFICATIONS SECTION 603-- PIPE CULVERTS AND STORM DRAINS, LATEST REVISION WITH THE EXCEPTION THAT THE ONLY ACCEPTABLE TYPES OF PIPE ARE AS FOLLOWS:

   REINFORCED CONCRETE PIPE, CLASS III
   POLYVINYL-CHLORIDE (PVC) PIPE
   SMOOTH BORE POLYETHYLENE – ADS OR HANCOR

2. TOPSOIL STRIPPED IN AREAS OF CONSTRUCTION THAT IS SUITABLE FOR REUSE AS LOAM SHALL BE STOCKPILED ON SITE AT A LOCATION TO BE DESIGNATED BY THE OWNER. UNSUITABLE SOIL SHALL BE SEPARATED, REMOVED AND DISPOSED OF AT AN APPROVED DISPOSAL LOCATION OFF SITE.
3. THE CONTRACTOR SHALL ANTICIPATE THAT GROUNDWATER WILL BE ENCOUNTERED DURING CONSTRUCTION AND SHALL INCLUDE SUFFICIENT COSTS WITHIN THEIR BID TO PROVIDE DEWATERING AS NECESSARY. NO SEPARATE PAYMENT SHALL BE MADE TO THE CONTRACTOR FOR DEWATERING.

LEGEND

EXISTING	DESCRIPTION	PROPOSED
	BUILDING	
	RIGHT OF WAY	
	PROPERTY LINE	
	BUILDING SETBACK	
	ZONE LINE	
	WETLAND BOUNDARY	
	GUIDE RAIL	
	EDGE OF PAVEMENT	
	EDGE OF GRAVEL DRIVE	
100	GRADING CONTOUR LINE	100
X 226.4	SPOT ELEVATION	100.31
	TREELINE	
	TREES & HEDGES	
	POLE WITH LIGHT FIXTURE(S)	
	UTILITY POLE	
	FREESTANDING SIGN	
	PAINTED DIRECTIONAL TRAFFIC ARROW	
OE	OVERHEAD ELECTRIC/TELEPHONE	OHE/T
UE	UNDERGROUND ELECTRIC/TELEPHONE	UGE/T
W	WATER LINE	8"W
D	STORM DRAIN LINE	18"SD
	CULVERT	18"CULVERT
	HYDRANT	
WV	WATER GATE VALVE	
	WATER SHUT OFF VALVE	
	MANHOLE	
	CATCH BASIN	
	TEST PIT	
	IRON ROD (SET)	
	IRON ROD (FOUND)	
	MONUMENT	
	RIPRAP	
	SILT FENCE – PERIMETER	
	STONE SEDIMENT BARRIER	
	FENCE	
	WELL	

PERMITS

TYPE OF PERMIT	GOVERNING BODY	STATUS
SITE LOCATION OF DEVELOPMENT ACT – CONDITION COMPLIANCE	MAINE DEPARTMENT OF ENVIRONMENTAL PROTECTION 106 HOGAN ROAD BANGOR MAINE 04401	RECEIVED

CALL BEFORE YOU DIG
1-888-344-7233

PROJECT KEY PLAN

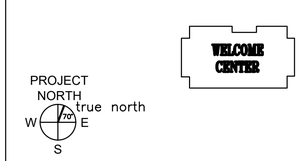

GORRILL PALMER
Relationships. Responsiveness. Results.
www.gorrillpalmer.com
207.772.2515

AECOM
1 FEDERAL STREET, 8TH FLOOR
BOSTON, MA 02110
617.723.1700
www.aecom.com

STATE OF MAINE
DEPARTMENT OF TRANSPORTATION

DATE

FED PIN NO: NA
WIN NO: 017163.02 & 017163.03

STATE OF MAINE
DOUGLAS R. REYNOLDS
10/31/22
LICENSED
PROFESSIONAL ENGINEER

SIGNATURE
ENG. LIN. NUMBER 6251
DATE JANUARY 17, 2022

PROJECT INFORMATION

PROGRAM	–
PROJECT MANAGER	–
DESIGNER	AECOM
CONSULTANT	–
PROJECT RESIDENT	–
CONTRACTOR	–
PROJECT COMPLETION DATE	–

MAINE DEPARTMENT OF TRANSPORTATION
ACADIA GATEWAY FACILITY
INTERMODAL AND WELCOME CENTER

SITE GENERAL NOTES AND LEGEND

SHEET NUMBER
C002

U:\1826.05_AECOM_Acadia Gateway Center_2021 Construction Documents\Z - CAD\DWG\1826-05-NOTES.dwg Oct 31, 2022 - 10:10am

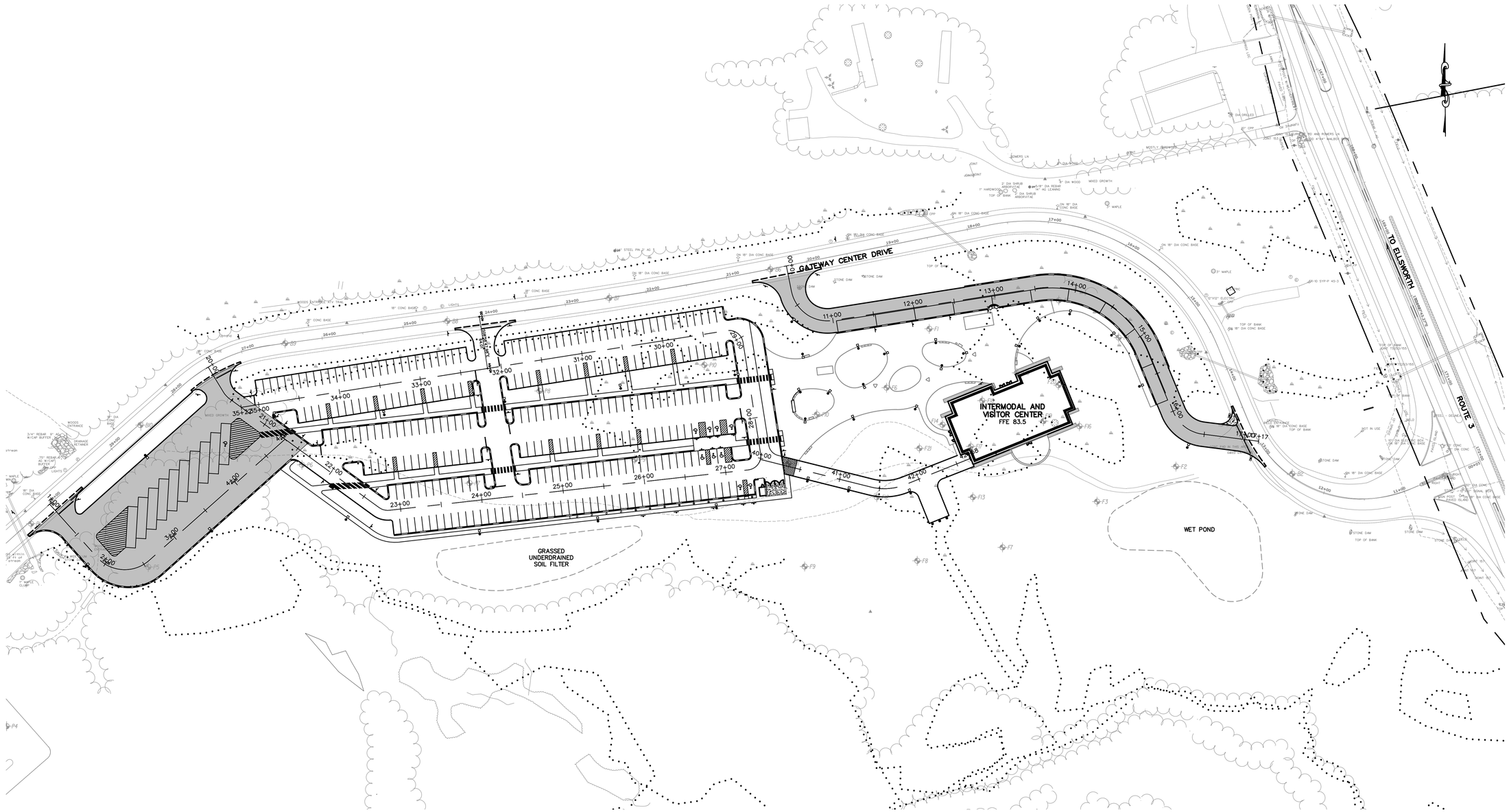

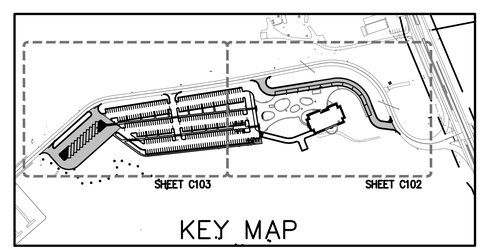

KEY MAP

PROJECT KEY PLAN

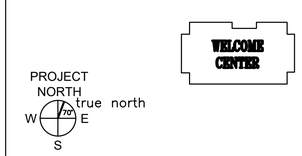

1 inch = 60 ft.

GORRILL PALMER

Relationships. Responsiveness. Results.
www.gorrillpalmer.com
207.772.2515

AECOM
1 FEDERAL STREET, 8TH FLOOR
BOSTON, MA 02110
617.723.1700
www.aecom.com

STATE OF MAINE
DEPARTMENT OF TRANSPORTATION

	DATE

FED PIN NO: NA
WIN NO: 017163.02 & 017163.03

STATE OF MAINE
DOUGLAS REYNOLDS
10/31/22
LICENSED
PROFESSIONAL ENGINEER

INFORMATION	
PROJECT	
PROGRAM	–
PROJECT MANAGER	–
DESIGNER	AECOM
CONSULTANT	–
PROJECT RESIDENT	–
CONTRACTOR	–
PROJECT COMPLETION DATE	–

SIGNATURE
ENG. LIN. NUMBER 6251
DATE JANUARY 17, 2022

MAINE DEPARTMENT OF TRANSPORTATION
ACADIA GATEWAY FACILITY
INTERMODAL AND WELCOME CENTER

OVERALL CIVIL SITE PLAN

SHEET NUMBER
C100

U:\1826.05_AECOM_Acadia Gateway Center_2021 Construction Documents\Z - CAD\DWG\1826-05-SP.dwg Oct 31, 2022 - 10:10am

BASELINE CURVE TABLE							
CURVE NO.	LENGTH	RADIUS	TANGENT	DELTA	CHORD BEARING	START STATION	END STATION
C-6	68.77	45.00	43.13	87°33'57"	S55°11'28"E	10+31.66	11+00.43
C-7	171.12	128.00	101.09	76°35'54"	S60°40'30"E	13+50.71	15+21.83
C-8	47.45	45.00	26.20	60°25'08"	S52°35'07"E	16+00.68	16+48.13

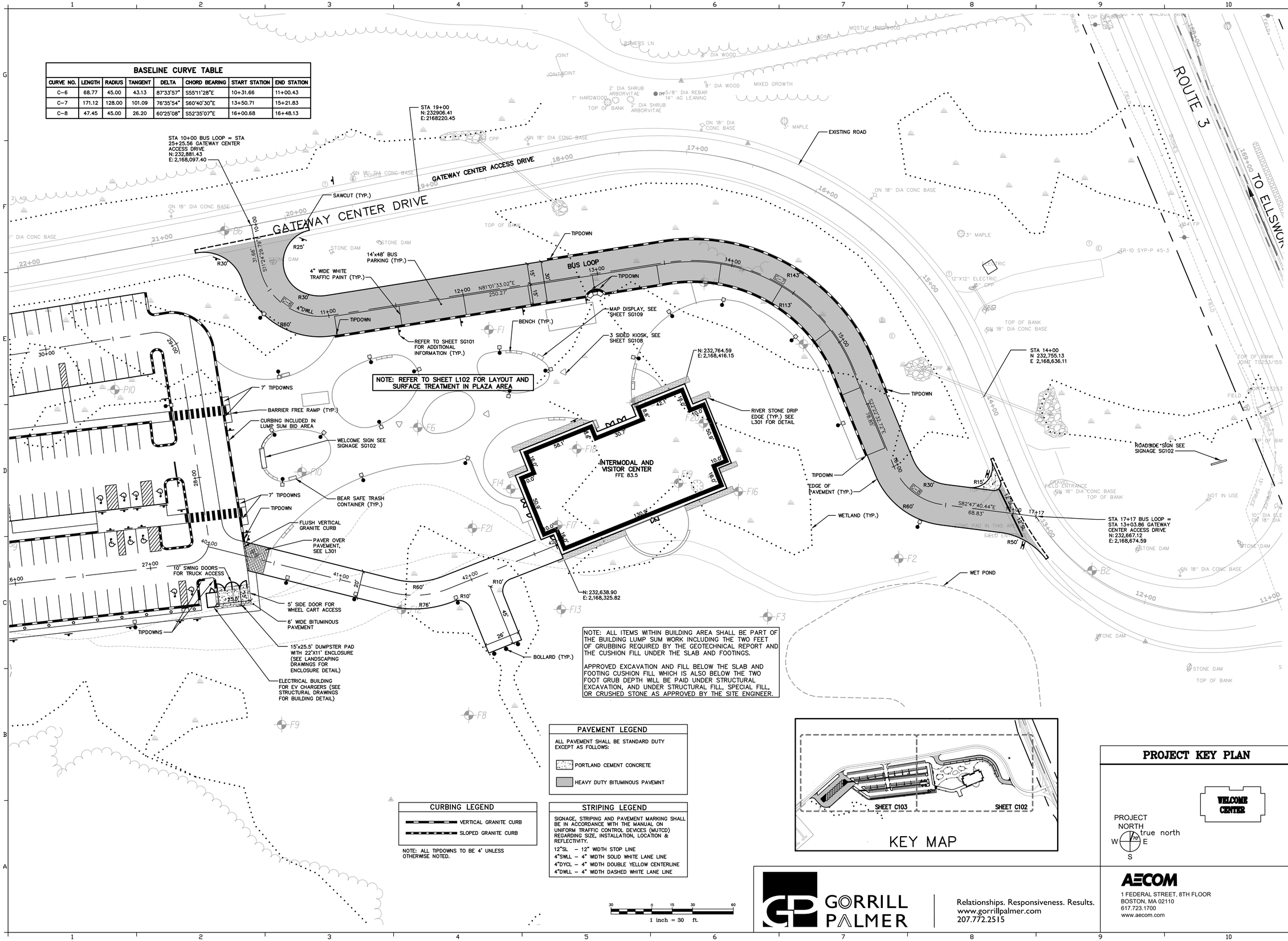

NOTE: ALL ITEMS WITHIN BUILDING AREA SHALL BE PART OF THE BUILDING LUMP SUM WORK INCLUDING THE TWO FEET OF GRUBBING REQUIRED BY THE GEOTECHNICAL REPORT AND THE CUSHION FILL UNDER THE SLAB AND FOOTINGS.

APPROVED EXCAVATION AND FILL BELOW THE SLAB AND FOOTING CUSHION FILL WHICH IS ALSO BELOW THE TWO FOOT GRUB DEPTH WILL BE PAID UNDER STRUCTURAL EXCAVATION, AND UNDER STRUCTURAL FILL, SPECIAL FILL, OR CRUSHED STONE AS APPROVED BY THE SITE ENGINEER.

PAVEMENT LEGEND

ALL PAVEMENT SHALL BE STANDARD DUTY EXCEPT AS FOLLOWS:

- PORTLAND CEMENT CONCRETE
- HEAVY DUTY BITUMINOUS PAVEMNT

CURBING LEGEND

- VERTICAL GRANITE CURB
- SLOPED GRANITE CURB

NOTE: ALL TIPDOWNS TO BE 4' UNLESS OTHERWISE NOTED.

STRIPING LEGEND

SIGNAGE, STRIPING AND PAVEMENT MARKING SHALL BE IN ACCORDANCE WITH THE MANUAL ON UNIFORM TRAFFIC CONTROL DEVICES (MUTCD) REGARDING SIZE, INSTALLATION, LOCATION & REFLECTIVITY.

12"SL – 12" WIDTH STOP LINE
4"SWLL – 4" WIDTH SOLID WHITE LANE LINE
4"DYCL – 4" WIDTH DOUBLE YELLOW CENTERLINE
4"DWLL – 4" WIDTH DASHED WHITE LANE LINE

30 0 15 30 60
1 inch = 30 ft.

KEY MAP

PROJECT KEY PLAN

PROJECT NORTH
true north
W E S

GORRILL PALMER
Relationships. Responsiveness. Results.
www.gorrillpalmer.com
207.772.2515

AECOM
1 FEDERAL STREET, 8TH FLOOR
BOSTON, MA 02110
617.723.1700
www.aecom.com

STATE OF MAINE
DEPARTMENT OF TRANSPORTATION

DATE

FED PIN NO: NA
WIN NO: 017163.02 & 017163.03

STATE OF MAINE
DOUGLAS R. REYNOLDS
10/31/22
LICENSED PROFESSIONAL ENGINEER

SIGNATURE
ENG. LIN. NUMBER 6251
DATE JANUARY 17, 2022

PROJECT INFORMATION	
PROGRAM	–
PROJECT MANAGER	–
DESIGNER	AECOM
CONSULTANT	–
PROJECT RESIDENT	–
CONTRACTOR	–
PROJECT COMPLETION DATE	–

MAINE DEPARTMENT OF TRANSPORTATION
ACADIA GATEWAY FACILITY
INTERMODAL AND WELCOME CENTER

CIVIL SITE PLAN – EAST

SHEET NUMBER
C102

U:\1826.05_AECOM_Acadia Gateway Center_2021 Construction Documents\Z - CAD\DWG\1826-05-SP.dwg Oct 31, 2022 - 10:10am

BASELINE CURVE TABLE							
CURVE NO.	LENGTH	RADIUS	TANGENT	DELTA	CHORD BEARING	START STATION	END STATION
C-1	70.65	45.00	44.97	89°57'28"	S86°45'16"E	1+87.40	2+58.06
C-2	12.72	32.00	6.45	22°46'46"	S42°35'25"E	20+34.97	20+47.69
C-3	13.33	18.00	6.99	42°27'04"	S75°12'20"E	22+72.96	22+86.29
C-4	27.51	17.03	17.81	92°32'56"	N37°17'40"E	27+27.91	27+55.42
C-5	26.70	17.00	17.00	90°00'00"	N53°58'48"W	28+93.66	29+20.37

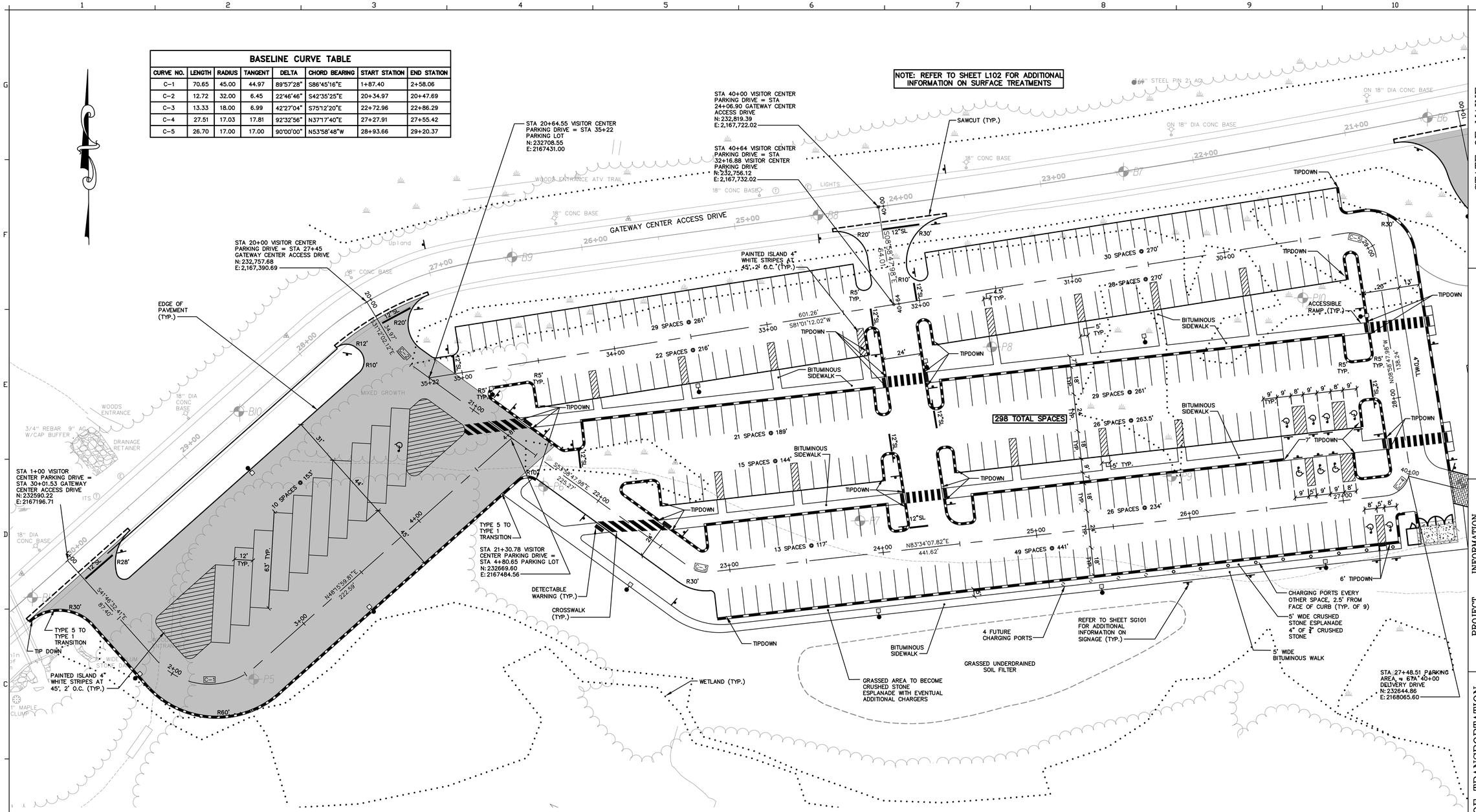

PAVEMENT LEGEND

ALL PAVEMENT SHALL BE STANDARD DUTY EXCEPT AS FOLLOWS:

- PORTLAND CEMENT CONCRETE
- HEAVY DUTY BITUMINOUS PAVEMNT

CURBING LEGEND

- VERTICAL GRANITE CURB
- SLOPED GRANITE CURB

NOTE: ALL TIPDOWNS TO BE 4' UNLESS OTHERWISE NOTED.

STRIPING LEGEND

SIGNAGE, STRIPING AND PAVEMENT MARKING SHALL BE IN ACCORDANCE WITH THE MANUAL ON UNIFORM TRAFFIC CONTROL DEVICES (MUTCD) REGARDING SIZE, INSTALLATION, LOCATION & REFLECTIVITY.

12"SL – 12" WIDTH STOP LINE
4"SWLL – 4" WIDTH SOLID WHITE LANE LINE
4"DYCL – 4" WIDTH DOUBLE YELLOW CENTERLINE
4"DWLL – 4" WIDTH DASHED WHITE LANE LINE

PROJECT KEY PLAN

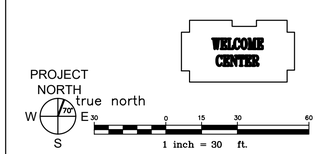

GORRILL PALMER
Relationships. Responsiveness. Results.
www.gorrillpalmer.com
207.772.2515

AECOM
1 FEDERAL STREET, 8TH FLOOR
BOSTON, MA 02110
617.723.1700
www.aecom.com

STATE OF MAINE
DEPARTMENT OF TRANSPORTATION

DATE

FED PIN NO: NA
WIN NO: 017163.02 & 017163.03

STATE OF MAINE
DOUGLAS REYNOLDS
10/31/22
LICENSED PROFESSIONAL ENGINEER

SIGNATURE
ENG. LIN. NUMBER 6251
DATE JANUARY 17, 2022

PROJECT INFORMATION		
PROGRAM	–	–
PROJECT MANAGER	–	–
DESIGNER	AECOM	–
CONSULTANT	–	–
PROJECT RESIDENT	–	–
CONTRACTOR	–	–
PROJECT COMPLETION DATE	–	–

MAINE DEPARTMENT OF TRANSPORTATION
ACADIA GATEWAY FACILITY
INTERMODAL AND WELCOME CENTER

CIVIL SITE PLAN – WEST

SHEET NUMBER
C103

U:\1826.05_AECOM_Acadia Gateway Center_2021 Construction Documents\Z - CAD\DWG\1826-05-SP.dwg Oct 31, 2022 - 10:10am

U:\1826.05_AECOM_Acadia Gateway Center_2021 Construction Documents\Z - CAD\DWG\1826-05-UTIL.dwg Oct 31, 2022 - 10:10am

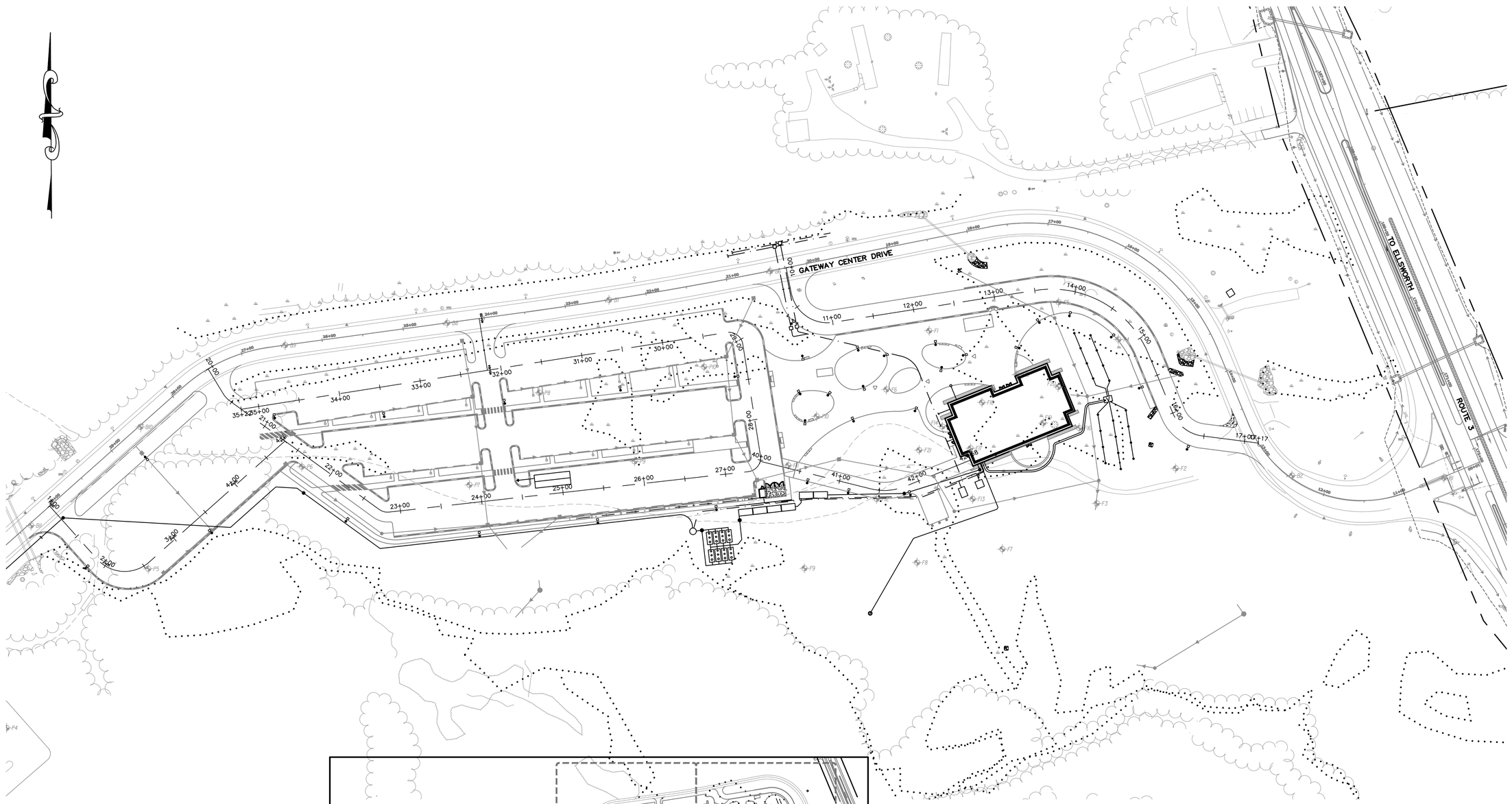

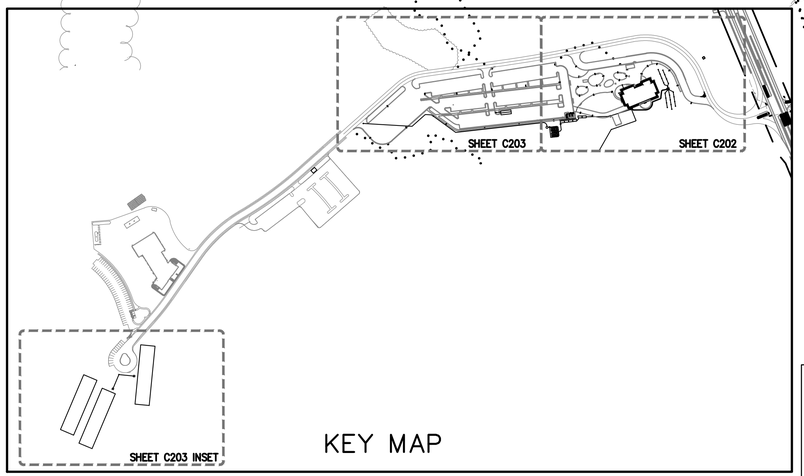

KEY MAP

PROJECT KEY PLAN

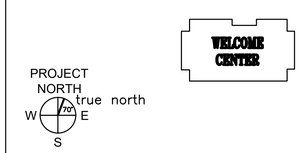

GORRILL PALMER

Relationships. Responsiveness. Results.
www.gorrillpalmer.com
207.772.2515

AECOM
1 FEDERAL STREET, 8TH FLOOR
BOSTON, MA 02110
617.723.1700
www.aecom.com

STATE OF MAINE
DEPARTMENT OF TRANSPORTATION

	DATE

FED PIN NO: NA
WIN NO: 017163.02 & 017163.03

STATE OF MAINE
DOUGLAS REYNOLDS
10/31/22
LICENSED
PROFESSIONAL ENGINEER

PROJECT	INFORMATION
PROGRAM	–
PROJECT MANAGER	–
DESIGNER	AECOM
CONSULTANT	–
PROJECT RESIDENT	–
CONTRACTOR	–
PROJECT COMPLETION DATE	–

SIGNATURE
ENG. LIN. NUMBER 6251
DATE JANUARY 17, 2022

MAINE DEPARTMENT OF TRANSPORTATION
ACADIA GATEWAY FACILITY
INTERMODAL AND WELCOME CENTER

OVERALL UTILITY PLAN

SHEET NUMBER
C201

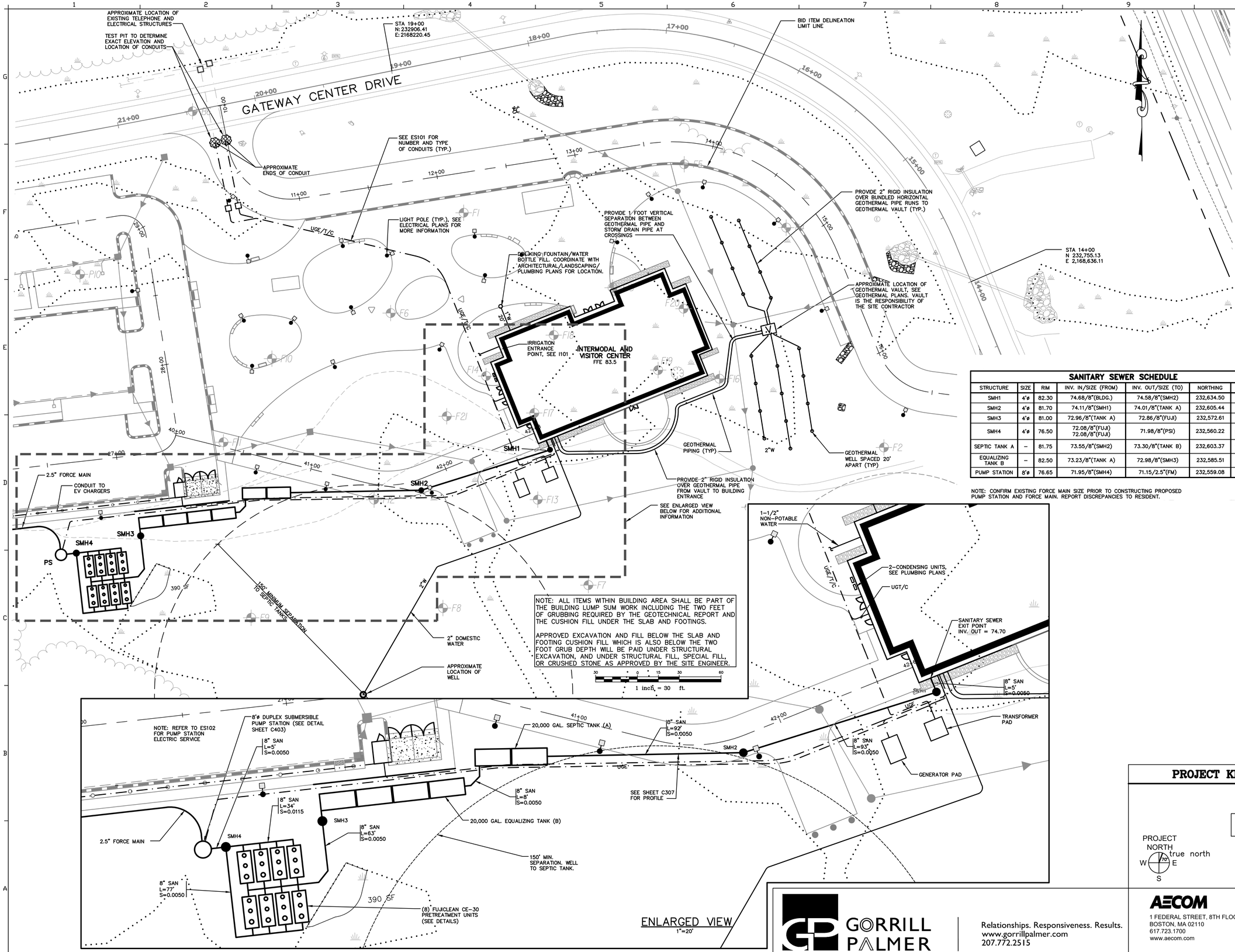

NOTE: ALL ITEMS WITHIN BUILDING AREA SHALL BE PART OF THE BUILDING LUMP SUM WORK INCLUDING THE TWO FEET OF GRUBBING REQUIRED BY THE GEOTECHNICAL REPORT AND THE CUSHION FILL UNDER THE SLAB AND FOOTINGS.

APPROVED EXCAVATION AND FILL BELOW THE SLAB AND FOOTING CUSHION FILL WHICH IS ALSO BELOW THE TWO FOOT GRUB DEPTH WILL BE PAID UNDER STRUCTURAL EXCAVATION, AND UNDER STRUCTURAL FILL, SPECIAL FILL, OR CRUSHED STONE AS APPROVED BY THE SITE ENGINEER.

SANITARY SEWER SCHEDULE

STRUCTURE	SIZE	RIM	INV. IN/SIZE (FROM)	INV. OUT/SIZE (TO)	NORTHING	EASTING
SMH1	4'ø	82.30	74.68/8"(BLDG.)	74.58/8"(SMH2)	232,634.50	2,168,333.09
SMH2	4'ø	81.70	74.11/8"(SMH1)	74.01/8"(TANK A)	232,605.44	2,168,240.77
SMH3	4'ø	81.00	72.96/8"(TANK A)	72.86/8"(FUJI)	232,572.61	2,168,039.46
SMH4	4'ø	76.50	72.08/8"(FUJI) 72.08/8"(FUJI)	71.98/8"(PSI)	232,560.22	2,167,993.31
SEPTIC TANK A	–	81.75	73.55/8"(SMH2)	73.30/8"(TANK B)	232,603.37	2,168,130.74
EQUALIZING TANK B	–	82.50	73.23/8"(TANK A)	72.98/8"(SMH3)	232,585.51	2,168,073.73
PUMP STATION	8'ø	76.65	71.95/8"(SMH4)	71.15/2.5"(FM)	232,559.08	2,167,983.37

NOTE: CONFIRM EXISTING FORCE MAIN SIZE PRIOR TO CONSTRUCTING PROPOSED PUMP STATION AND FORCE MAIN. REPORT DISCREPANCIES TO RESIDENT.

PROJECT KEY PLAN

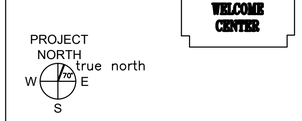

GORRILL PALMER

Relationships. Responsiveness. Results.
www.gorrillpalmer.com
207.772.2515

AECOM
1 FEDERAL STREET, 8TH FLOOR
BOSTON, MA 02110
617.723.1700
www.aecom.com

STATE OF MAINE
DEPARTMENT OF TRANSPORTATION

DATE

FED PIN NO: NA

WIN NO: 017163.02 & 017163.03

STATE OF MAINE
DOUGLAS R. REYNOLDS
10/31/22
LICENSED PROFESSIONAL ENGINEER

SIGNATURE

ENG. LIN. NUMBER 6251

DATE JANUARY 17, 2022

PROJECT	INFORMATION
PROGRAM	–
PROJECT MANAGER	–
DESIGNER	AECOM
CONSULTANT	–
PROJECT RESIDENT	–
CONTRACTOR	–
PROJECT COMPLETION DATE	–

MAINE DEPARTMENT OF TRANSPORTATION
ACADIA GATEWAY FACILITY
INTERMODAL AND WELCOME CENTER

UTILITY PLAN – EAST

SHEET NUMBER
C202

U:\1826.05_AECOM_Acadia Gateway Center_2021 Construction Documents\Z - CAD\DWG\1826-05-UTIL.dwg Oct 31, 2022 - 10:10am

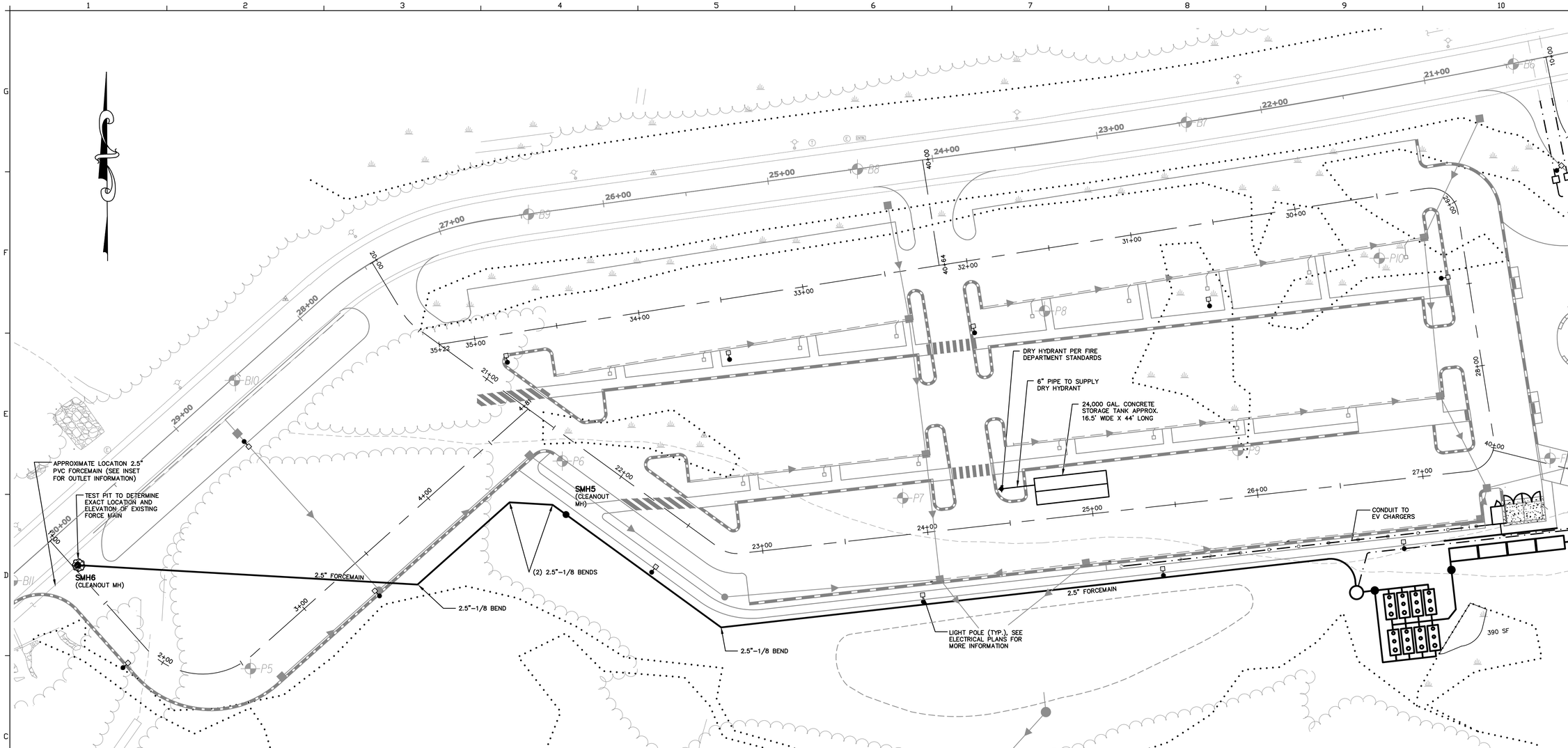

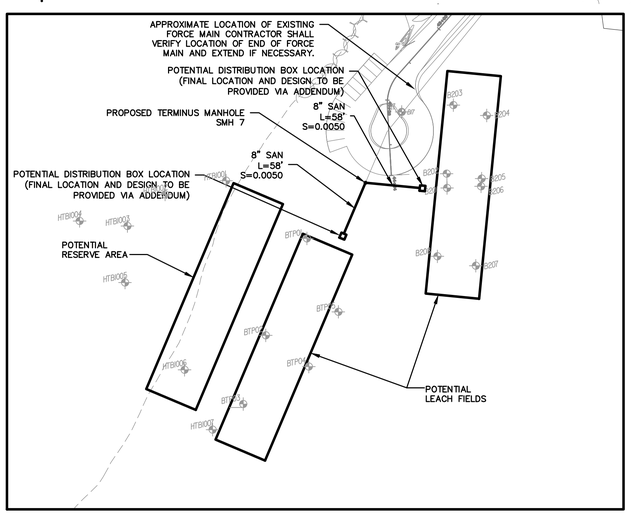

LEACH FIELD INSET
1"=80'

SANITARY SEWER SCHEDULE

STRUCTURE	SIZE	RIM	INV. IN/SIZE (FROM)	INV. OUT/SIZE (TO)	NORTHING	EASTING
SMH5	4'ø	88.00	80.30/2.5"(PS)	80.40/2.5"(SMH6)	232,606.06	2,167,506.35
SMH6	4'ø	92.90	87.70/2.5"(SMH5)	MATCH EXISTING	232,575.64	2,167,213.29
SMH7	4'ø	120.00	114.50/2.5"(SMH6)	114.40/8"(DIST. A) 114.40/8"(DIST. B)	231,523.02	2,166,188.13

NOTE: CONFIRM EXISTING FORCE MAIN SIZE PRIOR TO CONSTRUCTING PROPOSED PUMP STATION AND FORCE MAIN. REPORT DISCREPANCIES TO PROJECT MANAGER.

30 0 15 30 60
1 inch = 30 ft.

PROJECT KEY PLAN

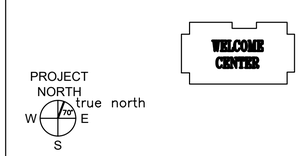

GORRILL PALMER
Relationships. Responsiveness. Results.
www.gorrillpalmer.com
207.772.2515

AECOM
1 FEDERAL STREET, 8TH FLOOR
BOSTON, MA 02110
617.723.1700
www.aecom.com

STATE OF MAINE
DEPARTMENT OF TRANSPORTATION

DATE

FED PIN NO: NA
WIN NO: 017163.02 & 017163.03

STATE OF MAINE
DOUGLAS R. REYNOLDS
10/31/22
LICENSED
PROFESSIONAL ENGINEER

PROJECT	INFORMATION
PROGRAM	–
PROJECT MANAGER	–
DESIGNER	AECOM
CONSULTANT	–
PROJECT RESIDENT	–
CONTRACTOR	–
PROJECT COMPLETION DATE	–

SIGNATURE
ENG. LIN. NUMBER 6251
DATE JANUARY 17, 2022

MAINE DEPARTMENT OF TRANSPORTATION
ACADIA GATEWAY FACILITY
INTERMODAL AND WELCOME CENTER

UTILITY PLAN – WEST

SHEET NUMBER
C203

U:\1826.05_AECOM_Acadia Gateway Center_2021 Construction Documents\Z - CAD\DWG\1826-05-UTIL.dwg Oct 31, 2022 - 10:10am

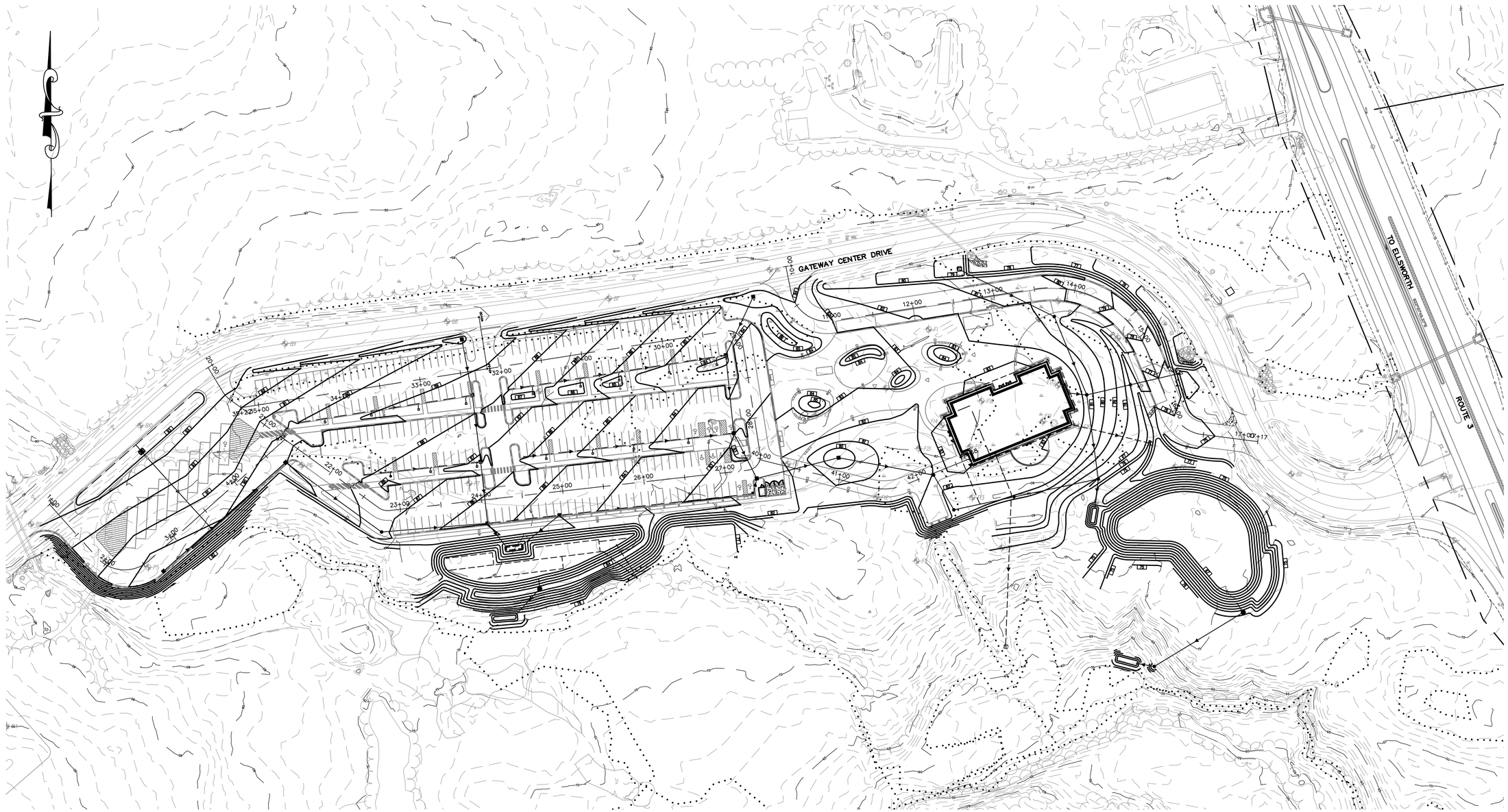

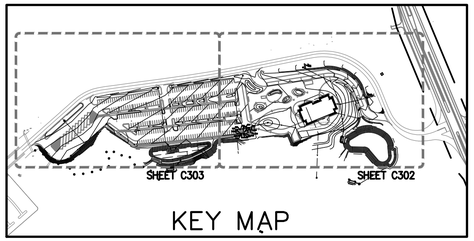

KEY MAP

PROJECT KEY PLAN

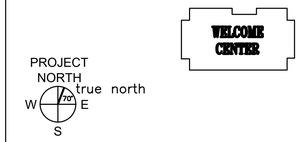

1 inch = 60 ft.

GORRILL PALMER

Relationships. Responsiveness. Results.
www.gorrillpalmer.com
207.772.2515

AECOM
1 FEDERAL STREET, 8TH FLOOR
BOSTON, MA 02110
617.723.1700
www.aecom.com

STATE OF MAINE
DEPARTMENT OF TRANSPORTATION

	DATE

FED PIN NO: NA
WIN NO: 017163.02 & 017163.03

STATE OF MAINE
DOUGLAS R. REYNOLDS
10/31/22
LICENSED
PROFESSIONAL ENGINEER

PROJECT INFORMATION	
PROGRAM	–
PROJECT MANAGER	–
DESIGNER	AECOM
CONSULTANT	–
PROJECT RESIDENT	–
CONTRACTOR	–
PROJECT COMPLETION DATE	–

SIGNATURE
ENG. LIN. NUMBER 6251
DATE JANUARY 17, 2022

MAINE DEPARTMENT OF TRANSPORTATION
ACADIA GATEWAY FACILITY
INTERMODAL AND WELCOME CENTER

OVERALL GRADING PLAN

SHEET NUMBER
C301

U:\18826.05_AECOM_Acadia Gateway Center_2021 Construction Documents\Z - CAD\DWG\1826-05-GRADE.dwg Oct 31, 2022 - 10:11am

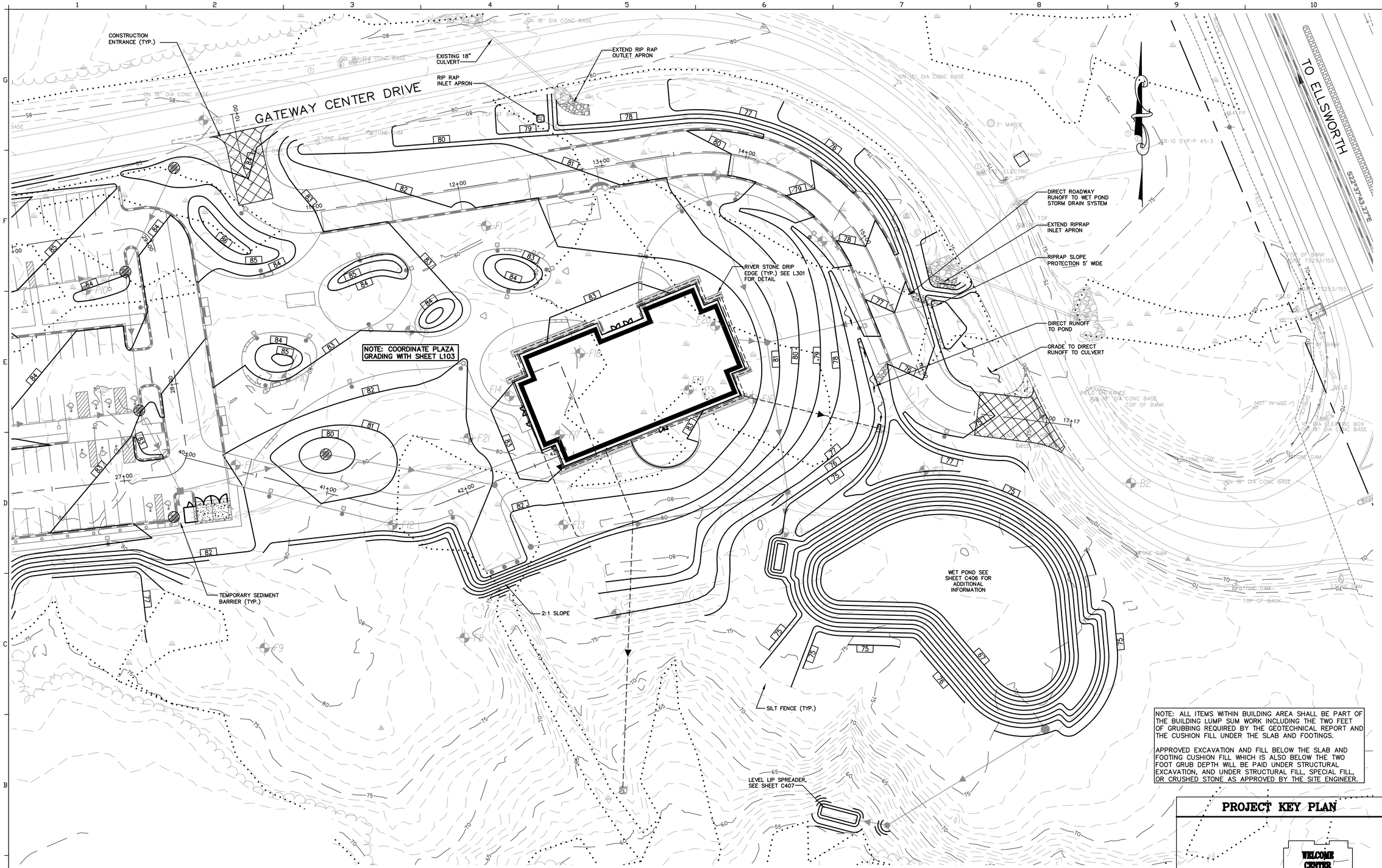

NOTE: ALL ITEMS WITHIN BUILDING AREA SHALL BE PART OF THE BUILDING LUMP SUM WORK INCLUDING THE TWO FEET OF GRUBBING REQUIRED BY THE GEOTECHNICAL REPORT AND THE CUSHION FILL UNDER THE SLAB AND FOOTINGS.

APPROVED EXCAVATION AND FILL BELOW THE SLAB AND FOOTING CUSHION FILL WHICH IS ALSO BELOW THE TWO FOOT GRUB DEPTH WILL BE PAID UNDER STRUCTURAL EXCAVATION, AND UNDER STRUCTURAL FILL, SPECIAL FILL, OR CRUSHED STONE AS APPROVED BY THE SITE ENGINEER.

PROJECT KEY PLAN

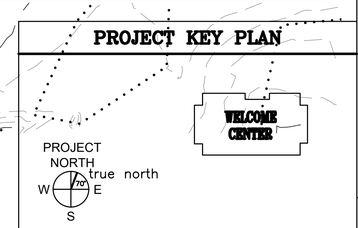

GORRILL PALMER

Relationships. Responsiveness. Results.
www.gorrillpalmer.com
207.772.2515

AECOM
1 FEDERAL STREET, 8TH FLOOR
BOSTON, MA 02110
617.723.1700
www.aecom.com

STATE OF MAINE
DEPARTMENT OF TRANSPORTATION

DATE	
FED PIN NO:	NA
WIN NO:	017163.02 & 017163.03

STATE OF MAINE
DOUGLAS R. REYNOLDS
10/31/22
LICENSED PROFESSIONAL ENGINEER

SIGNATURE	
ENG. LIN. NUMBER	6251
DATE	JANUARY 17, 2022

PROJECT INFORMATION	
PROGRAM	-
PROJECT MANAGER	-
DESIGNER	AECOM
CONSULTANT	-
PROJECT RESIDENT	-
CONTRACTOR	-
PROJECT COMPLETION DATE	-

MAINE DEPARTMENT OF TRANSPORTATION
ACADIA GATEWAY FACILITY
INTERMODAL AND WELCOME CENTER

GRADING PLAN – EAST

SHEET NUMBER
C302

U:\1826.05_AECOM_Acadia Gateway Center_2021 Construction Documents\Z - CAD\DWG\1826-05-GRADE.dwg Oct 31, 2022 - 10:11am

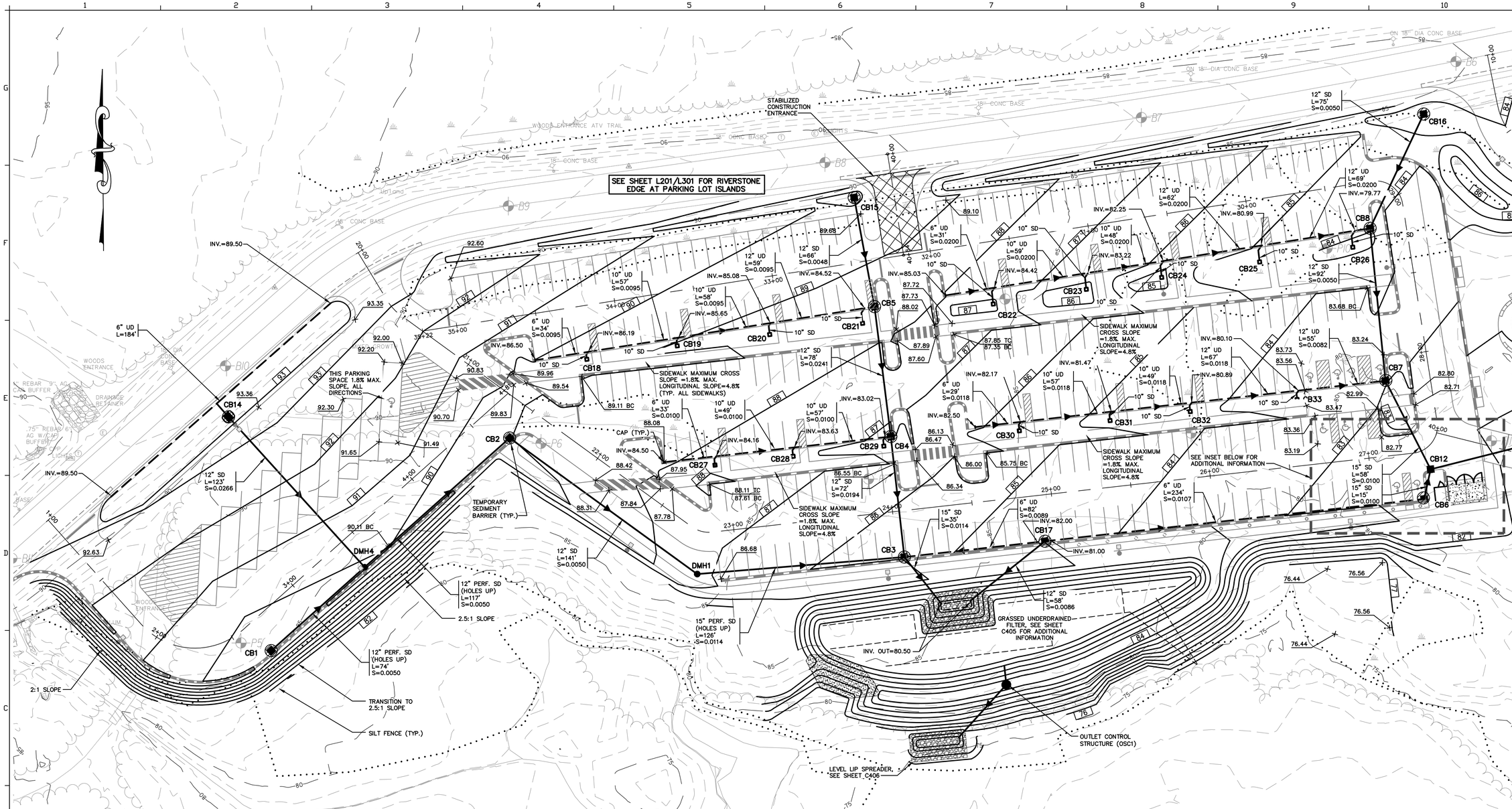

DRAINAGE STRUCTURE SCHEDULE						
STRUCTURE	SIZE	RIM	INV. IN/SIZE (FROM)	INV. OUT/SIZE (TO)	NORTHING	EASTING
CB1	4'ø	89.00		85.00/12"(DMH4)	232,508.46	2,167,336.21
CB2	4'ø	89.00	83.95/12"(DMH4)	83.85/12"(DMH1)	232,641.59	2,167,485.46
CB3	4'ø	85.39	81.60/15"(DMH1) 81.00/12"(CB4) 81.20/6"(UD)	80.90/15"(POND)	232,567.05	2,167,732.52
CB4	4'ø	86.80	82.50/12"(CB5) 83.00/10"(UD)	82.40/12"(CB3)	232,642.52	2,167,724.00
CB5	4'ø	88.40	84.48/12"(CB15) 84.48/12"(UD)	84.38/12"(CB4)	232,723.89	2,167,713.84
CB6	4'ø	82.05	78.50/6"(UD)	77.90/15"(CB12)	232,603.63	2,168,059.27
CB7	4'ø	83.00	79.50/6"(UD) 79.00/12"(CB8)	78.90/15"(CB6)	232,677.45	2,168,033.59
CB8	4'ø	84.00	79.63/12"(CB16) 79.56/6"(UD)	79.46/12"(CB7)	232,772.90	2,168,023.98
CB14	4'ø	91.90	88.40/6"(UD)	87.90/12"(DMH4)	232,654.82	2,167,309.51
CB15	4'ø	88.80	–	84.90/12"(CB5)	232,792.19	2,167,701.09
CB16	4'ø	83.50	–	80.00/12"(CB8)	232,844.44	2,168,057.49
CB17	4'ø	84.50	–	81.00/12"(OUTLET)	232,576.97	2,167,820.50
CB18	TYPE "F"	89,00	–	87.00/10"(UD)	232,690.88	2,167,533.80
CB19	TYPE "F"	88.50	–	86.50/10"(UD)	232,699.32	2,167,590.39
CB20	TYPE "F"	88.00	–	86.00/10"(UD)	232,706.39	2,167,648.24
CB21	TYPE "F"	87.75	–	85.75/10"(UD)	232,713.44	2,167,706.36
CB22	TYPE "F"	86.50	–	84.50/10"(UD)	232,725.50	2,167,788.15
CB23	TYPE "F"	85.70	–	83.70/10"(UD)	232,734.71	2,167,846.38
CB24	TYPE "F"	84.75	–	82.75/10"(UD)	232,742.16	2,167,893.55
CB25	TYPE "F"	84.25	–	82.25/10"(UD)	232,751.85	2,167,954.84
CB26	TYPE "F"	83.50	–	81.50/10"(UD)	232,761.07	2,168,013.18

NOTE: CATCH BASIN OUTLET HOOD (SNOUT) SHALL BE PROVIDED ON ALL STORM DRAIN OUTLET PIPES AT CATCH BASINS

DRAINAGE STRUCTURE SCHEDULE						
STRUCTURE	SIZE	RIM	INV. IN/SIZE (FROM)	INV. OUT/SIZE (TO)	NORTHING	EASTING
CB27	TYPE "F"	87.30	–	85.30/10"(UD)	232,624.64	2,167,614.00
CB28	TYPE "F"	87.00	–	85.00/10"(UD)	232,630.15	2,167,662.90
CB29	TYPE "F"	86.30	–	84.30/10"(UD)	232,636.55	2,167,719.66
CB30	TYPE "F"	85.00	–	83.00/10"(UD)	232,646.10	2,167,804.47
CB31	TYPE "F"	84.50	–	82.50/10"(UD)	232,652.51	2,167,861.25
CB32	TYPE "F"	83.70	–	81.70/10"(UD)	232,658.16	2,167,911.41
CB33	TYPE "F"	83.00	–	81.00/10"(UD)	232,665.71	2,167,978.35
DMH1	4'ø	87.30	83.14/12"(CB2)	83.04/15"(CB3)	232,556.44	2,167,602.89
DMH4	4'ø	89.84	84.63/12"(CB1) 84.63/12"(CB14)	84.53/12"(CB2)	232,560.70	2,167,394.78

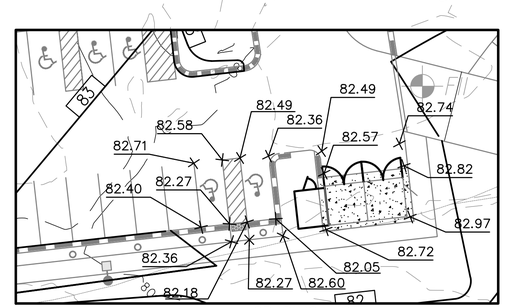

GRADING INSET
1"=20'

1 inch = 30 ft.

PROJECT KEY PLAN

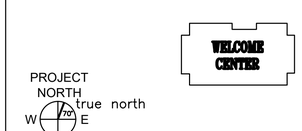

GORRILL PALMER
Relationships. Responsiveness. Results.
www.gorrillpalmer.com
207.772.2515

AECOM
1 FEDERAL STREET, 8TH FLOOR
BOSTON, MA 02110
617.723.1700
www.aecom.com

STATE OF MAINE
DEPARTMENT OF TRANSPORTATION

DATE	
FED PIN NO:	NA
WIN NO:	017163.02 & 017163.03

STATE OF MAINE
DOUGLAS REYNOLDS
10/31/22
LICENSED PROFESSIONAL ENGINEER

SIGNATURE	
ENG. LIN. NUMBER	6251
DATE	JANUARY 17, 2022

PROJECT INFORMATION	
PROGRAM	–
PROJECT MANAGER	–
DESIGNER	AECOM
CONSULTANT	–
PROJECT RESIDENT	–
CONTRACTOR	–
PROJECT COMPLETION DATE	–

MAINE DEPARTMENT OF TRANSPORTATION
ACADIA GATEWAY FACILITY
INTERMODAL AND WELCOME CENTER

GRADING AND DRAINAGE PLAN – WEST

SHEET NUMBER
C303

U:\1826.05_AECOM_Acadia Gateway Center_2021 Construction Documents\Z - CAD\DWG\1826-05-GRADE.dwg Oct 31, 2022 - 10:11am

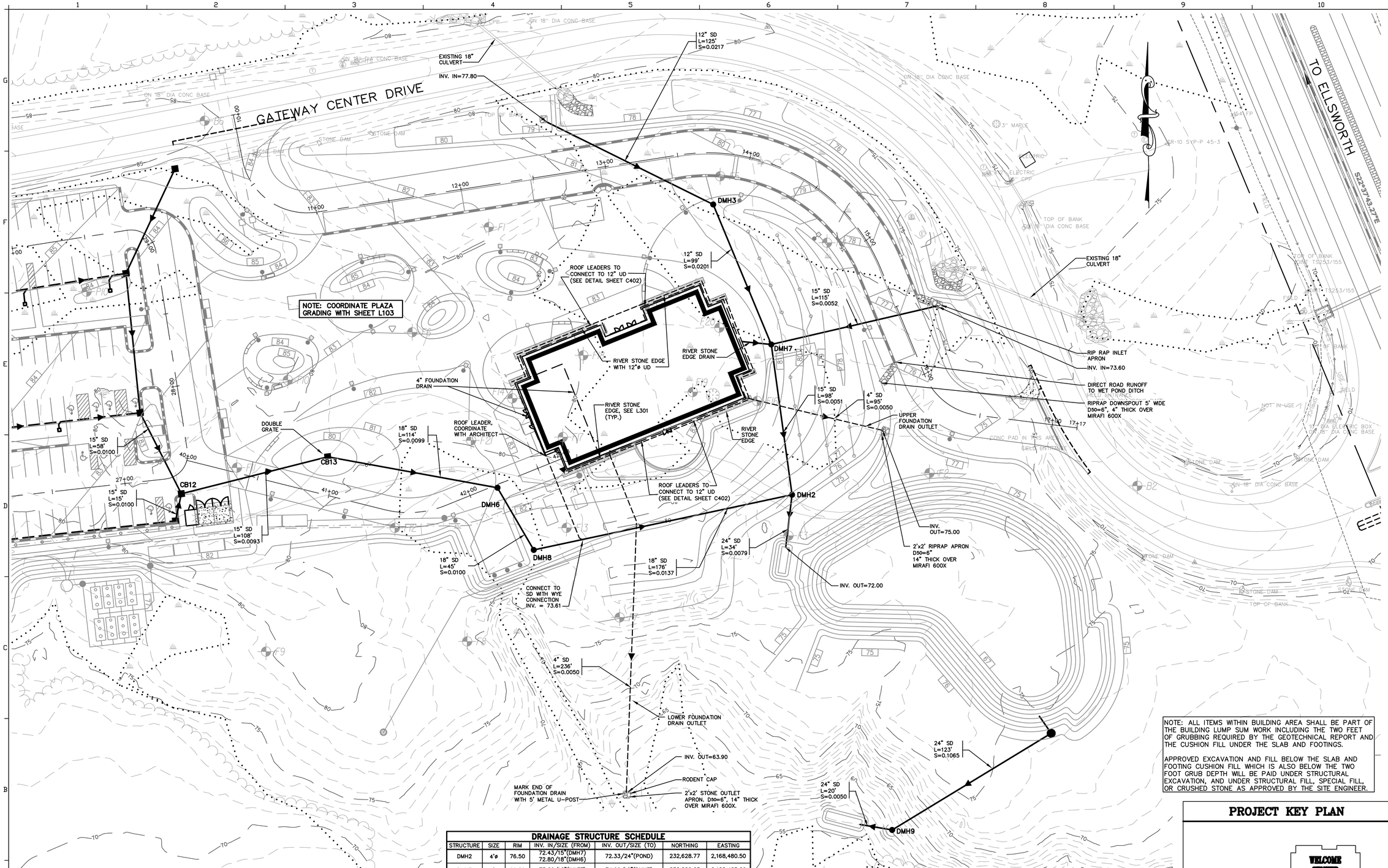

NOTE: ALL ITEMS WITHIN BUILDING AREA SHALL BE PART OF THE BUILDING LUMP SUM WORK INCLUDING THE TWO FEET OF GRUBBING REQUIRED BY THE GEOTECHNICAL REPORT AND THE CUSHION FILL UNDER THE SLAB AND FOOTINGS.

APPROVED EXCAVATION AND FILL BELOW THE SLAB AND FOOTING CUSHION FILL WHICH IS ALSO BELOW THE TWO FOOT GRUB DEPTH WILL BE PAID UNDER STRUCTURAL EXCAVATION, AND UNDER STRUCTURAL FILL, SPECIAL FILL, OR CRUSHED STONE AS APPROVED BY THE SITE ENGINEER.

DRAINAGE STRUCTURE SCHEDULE

STRUCTURE	SIZE	RIM	INV. IN/SIZE (FROM)	INV. OUT/SIZE (TO)	NORTHING	EASTING
DMH2	4'ø	76.50	72.43/15"(DMH7) 72.80/18"(DMH6)	72.33/24"(POND)	232,628.77	2,168,480.50
DMH3	6'ø	80.50	75.09/12"(INLET)	74.99/12"(DMH7)	232,820.05	2,168,425.69
DMH6	4'ø	81.90	75.86/18"(CB12)	75.76/18"(DMH8)	232,626.39	2,168,278.32
DMH7	4'ø	81.50	73.00/12"(DMH3) 73.00/15"(INLET) 73.00/6"(DRIP)	72.90/15"(DMH2)	232,724.21	2,168,465.44
DMH8	4'ø	81.60	75.31/18"(DMH6)	75.21/18"(DMH2)	232,583.41	2,168,055.31
DMH9	4'ø	60.50	55.50/24"(OCS)	55.10/24"(OUTLET)	232,391.86	2,168,548.12
CB12	4'ø	82.40	78.36/15"(CB7) 78.19/15"(CB6)	78.09/18"(CB13)	232,622.03	2168061.85
CB13	6'ø	79.50	77.09/18"(DMH5)	76.99/18"(DMH6)	232,648.07	2,168,161.56

NOTE: CATCH BASIN OUTLET HOOD (SNOUT) SHALL BE PROVIDED ON ALL STORM DRAIN OUTLET PIPES AT CATCH BASINS

30 0 15 30 60
1 inch = 30 ft.

PROJECT KEY PLAN

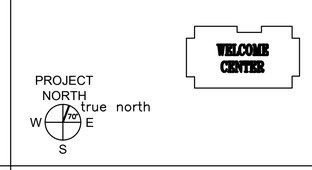

GORRILL PALMER
Relationships. Responsiveness. Results.
www.gorrillpalmer.com
207.772.2515

AECOM
1 FEDERAL STREET, 8TH FLOOR
BOSTON, MA 02110
617.723.1700
www.aecom.com

STATE OF MAINE
DEPARTMENT OF TRANSPORTATION

	DATE

FED PIN NO: NA
WIN NO: 017163.02 & 017163.03

STATE OF MAINE
DOUGLAS REYNOLDS
10/31/22
LICENSED PROFESSIONAL ENGINEER

PROJECT INFORMATION	
PROGRAM	-
PROJECT MANAGER	-
DESIGNER	AECOM
CONSULTANT	-
PROJECT RESIDENT	-
CONTRACTOR	-
PROJECT COMPLETION DATE	-

SIGNATURE
ENG. LIN. NUMBER 6251
DATE JANUARY 17, 2022

MAINE DEPARTMENT OF TRANSPORTATION
ACADIA GATEWAY FACILITY
INTERMODAL AND WELCOME CENTER

DRAINAGE PLAN – EAST

SHEET NUMBER
C304

U:\1826.05_AECOM_Acadia Gateway Center_2021 Construction Documents\Z - CAD\DWG\1826-05-DRAINAGE.dwg Oct 31, 2022 - 10:11am

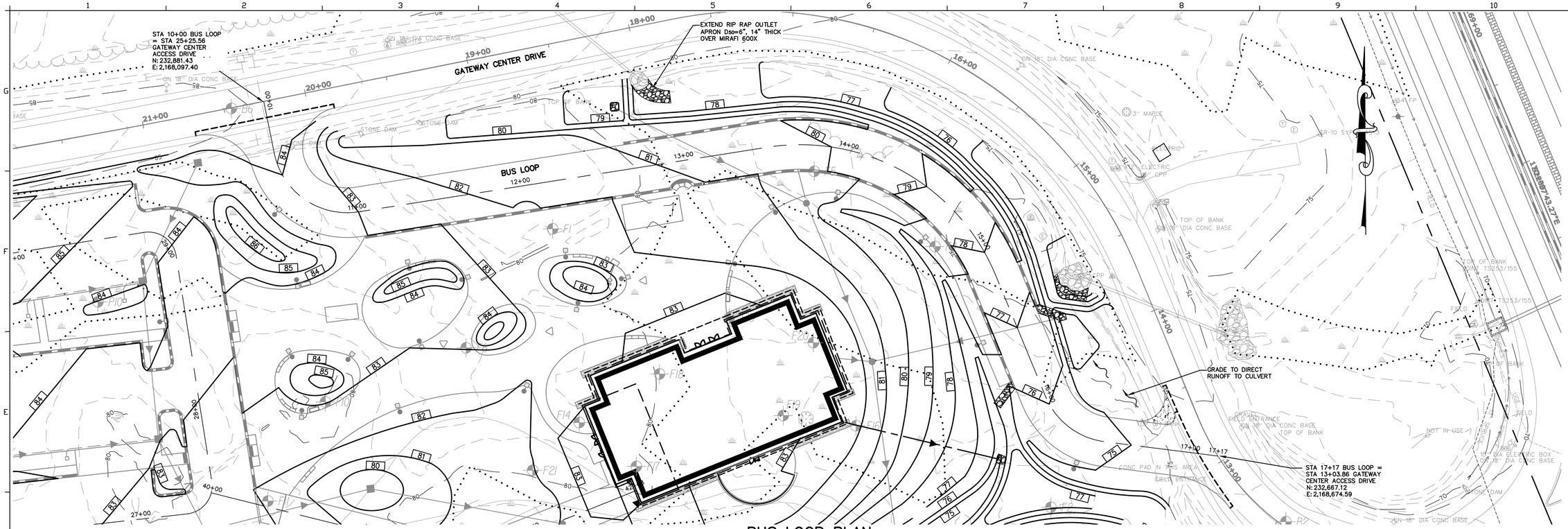

BUS LOOP PLAN

1"=30'

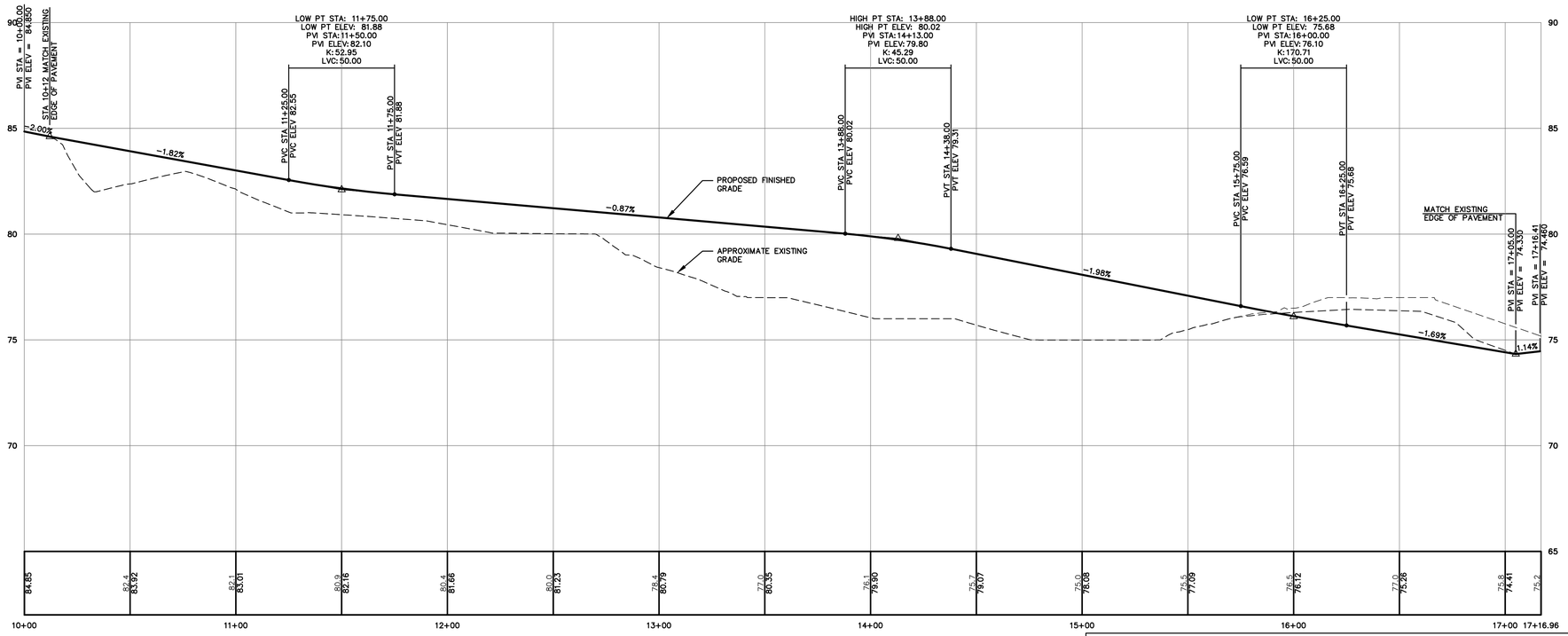

BUS LOOP PROFILE

1"=30' HORIZONTAL
1"=3' VERTICAL

1 inch = 30 ft.

PROJECT KEY PLAN

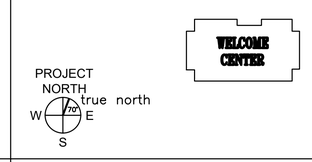

GORRILL PALMER

Relationships. Responsiveness. Results.
www.gorrillpalmer.com
207.772.2515

AECOM

1 FEDERAL STREET, 8TH FLOOR
BOSTON, MA 02110
617.723.1700
www.aecom.com

STATE OF MAINE
DEPARTMENT OF TRANSPORTATION

DATE	
FED PIN NO:	NA
WIN NO:	017163.02 & 017163.03

STATE OF MAINE — DOUGLAS REYNOLDS — 10/31/22 — LICENSED PROFESSIONAL ENGINEER

SIGNATURE	
ENG. LIN. NUMBER	6251
DATE	JANUARY 17, 2022

PROJECT	INFORMATION
PROGRAM	–
PROJECT MANAGER	–
DESIGNER	AECOM
CONSULTANT	–
PROJECT RESIDENT	–
CONTRACTOR	–
PROJECT COMPLETION DATE	–

MAINE DEPARTMENT OF TRANSPORTATION
ACADIA GATEWAY FACILITY
INTERMODAL AND WELCOME CENTER

BUS LOOP
PLAN AND PROFILE

SHEET NUMBER
C305

U:\1826.05_AECOM_Acadia Gateway Center_2021 Construction Documents\Z - CAD\DWG\1826-05-PP.dwg Oct 31, 2022 - 10:11am

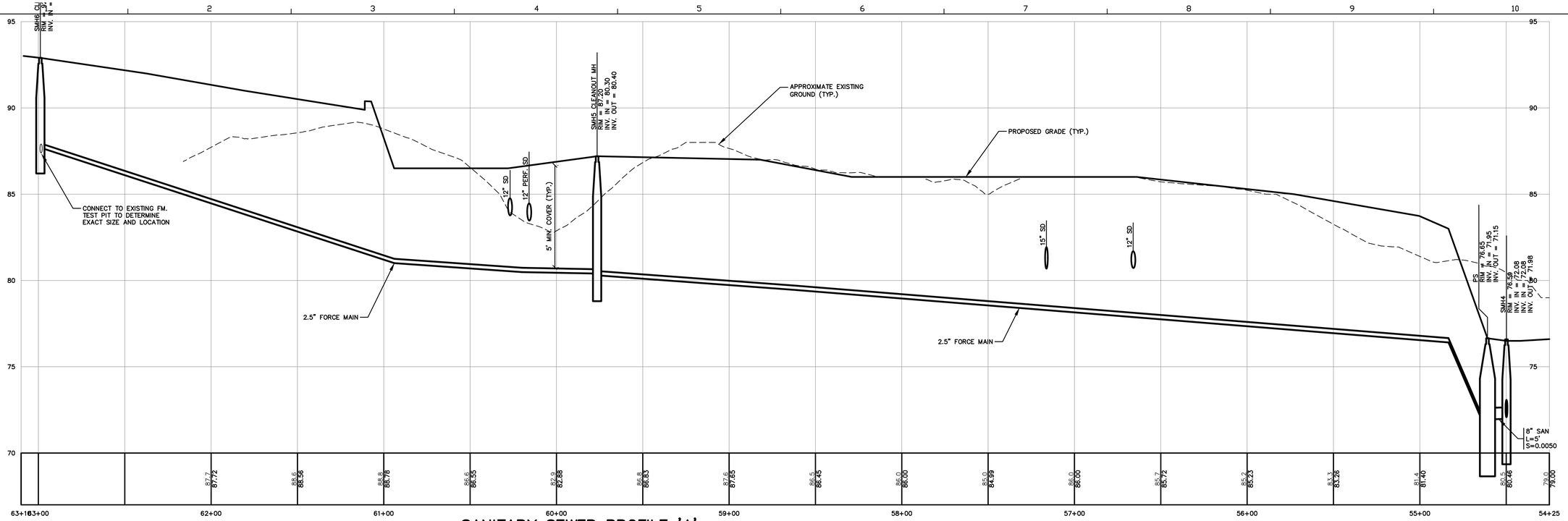

SANITARY SEWER PROFILE 'A'

1"=30' HORIZONTAL
1"=3' VERTICAL

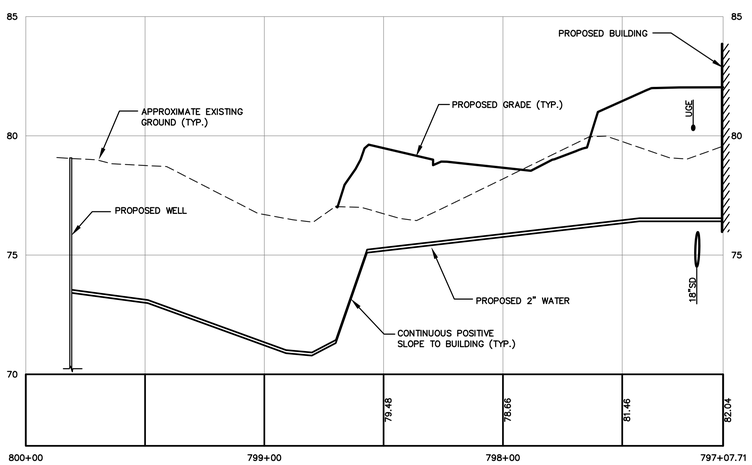

WATER MAIN PROFILE

1"=30' HORIZONTAL
1"=3' VERTICAL

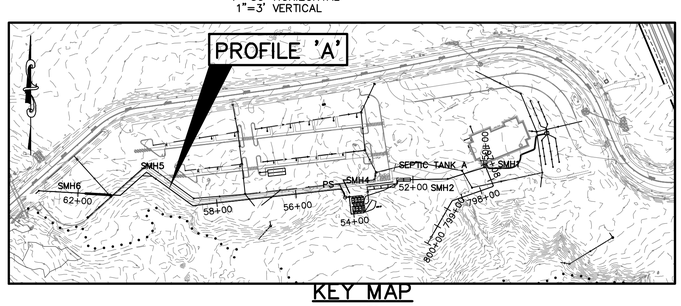

KEY MAP

NTS

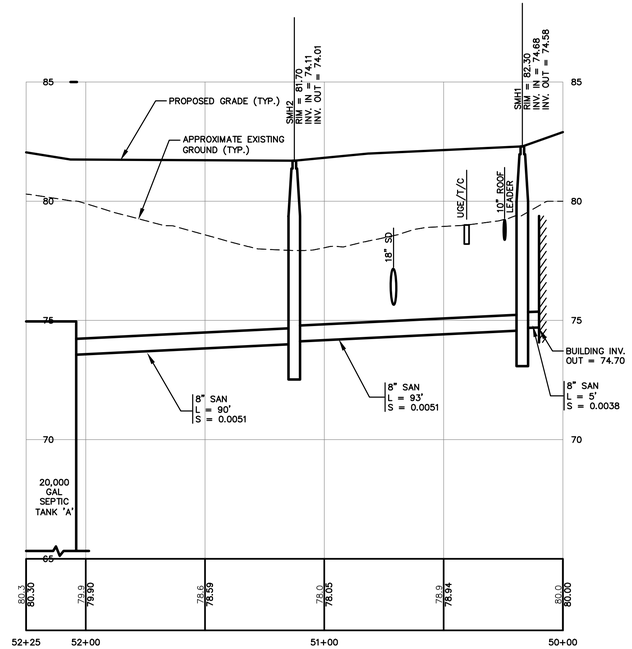

SANITARY SEWER PROFILE 'A'

1"=30', HORIZONTAL
1"=3' VERTICAL

30 0 15 30 60
1 inch = 30 ft.

GORRILL PALMER

Relationships. Responsiveness. Results.
www.gorrillpalmer.com
207.772.2515

PROJECT KEY PLAN

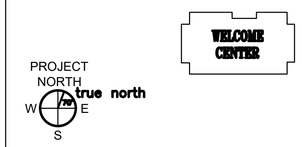

AECOM
1 FEDERAL STREET, 8TH FLOOR
BOSTON, MA 02110
617.723.1700
www.aecom.com

STATE OF MAINE
DEPARTMENT OF TRANSPORTATION

DATE

FED PIN NO: NA

WIN NO: 017163.02 & 017163.03

STATE OF MAINE
DOUGLAS R. REYNOLDS
No. 6251
10/31/22
PROFESSIONAL ENGINEER

SIGNATURE

ENG. LIN. NUMBER 6251

DATE JANUARY 17, 2022

PROJECT	INFORMATION
PROGRAM	–
PROJECT MANAGER	–
DESIGNER	AECOM
CONSULTANT	–
PROJECT RESIDENT	–
CONTRACTOR	–
PROJECT COMPLETION DATE	–

MAINE DEPARTMENT OF TRANSPORTATION
ACADIA GATEWAY FACILITY
INTERMODAL AND WELCOME CENTER

SANITARY SEWER AND WATER PROFILE

SHEET NUMBER
C307

U:\1826.05_AECOM_Acadia Gateway Center_2021 Construction Documents\Z - CAD\DWG\1826-05-PROFILES.dwg Oct 31, 2022 - 10:11am

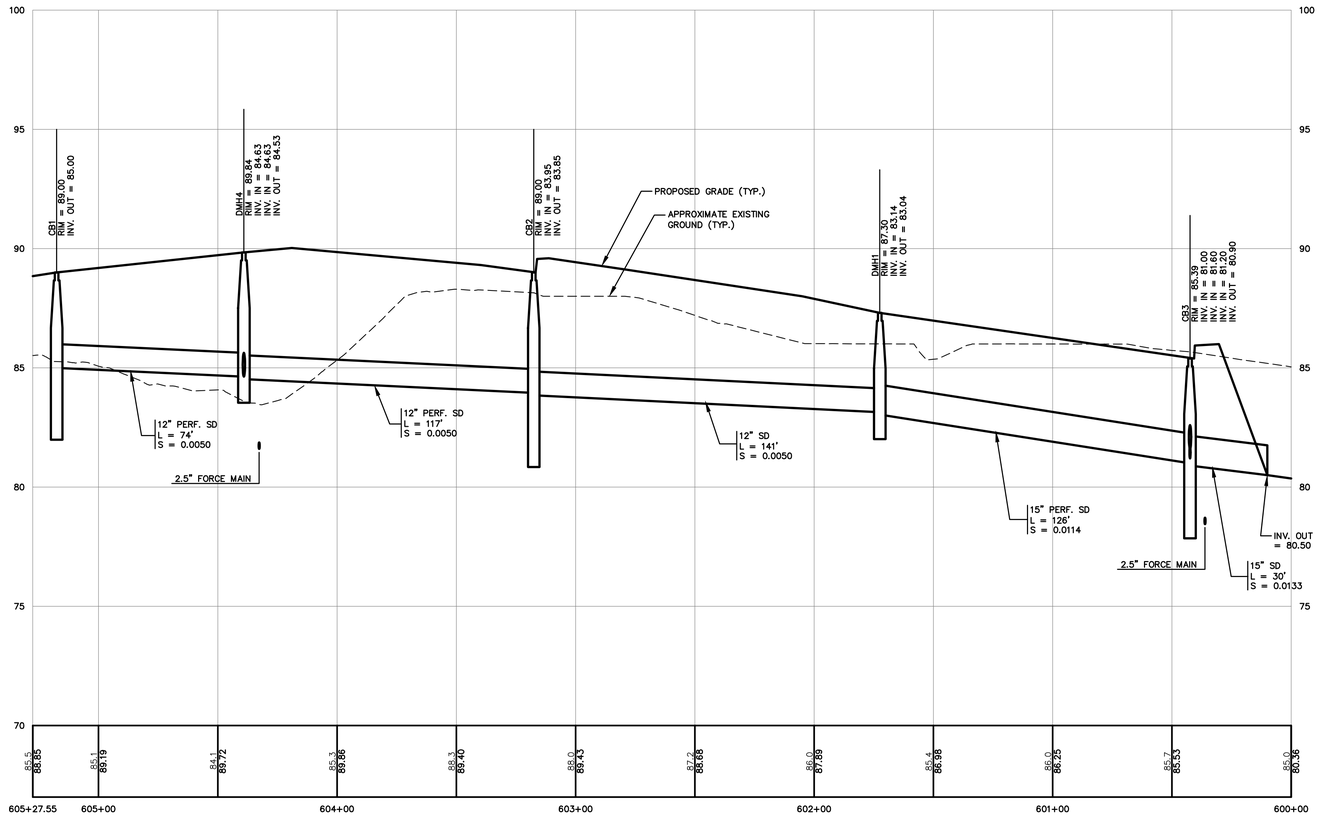

STORM DRAIN PROFILE 'A'

1"=30' HORIZONTAL
1"=3' VERTICAL

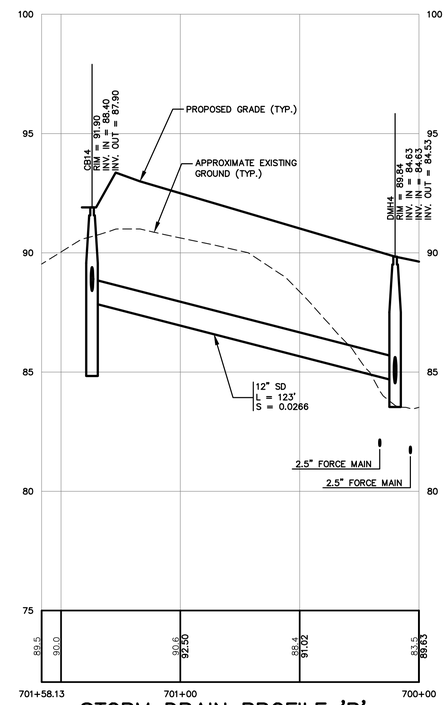

STORM DRAIN PROFILE 'B'

1"=30' HORIZONTAL
1"=3' VERTICAL

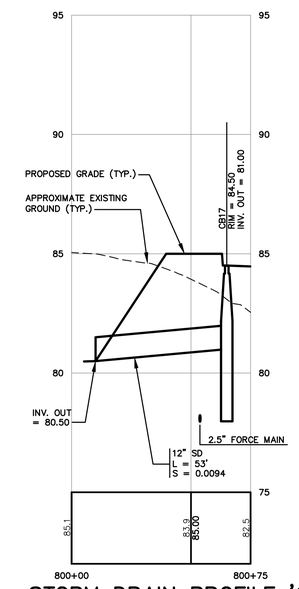

STORM DRAIN PROFILE 'C'

1"=30' HORIZONTAL
1"=3' VERTICAL

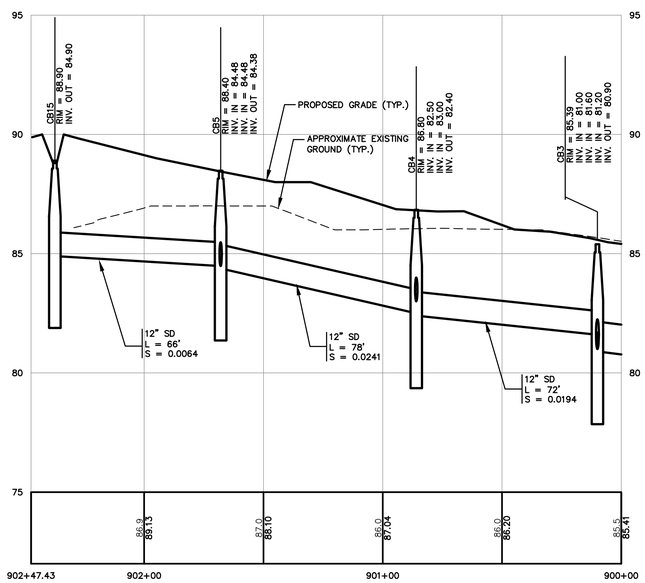

STORM DRAIN PROFILE 'D'

1"=30' HORIZONTAL
1"=3' VERTICAL

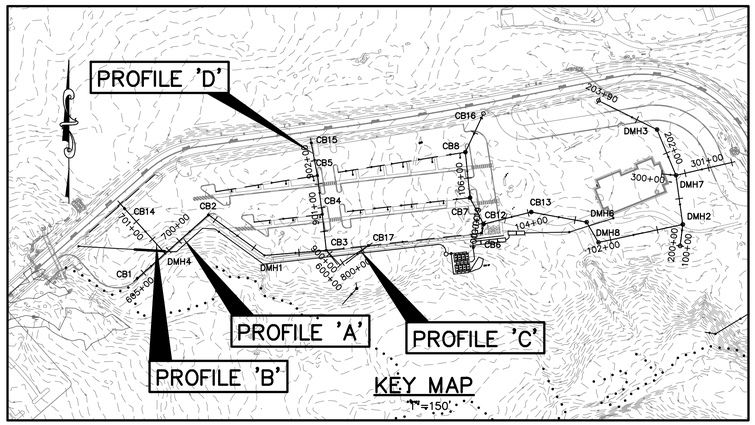

PROJECT KEY PLAN

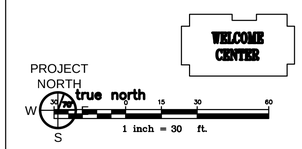

GORRILL PALMER

Relationships. Responsiveness. Results.
www.gorrillpalmer.com
207.772.2515

AECOM

1 FEDERAL STREET, 8TH FLOOR
BOSTON, MA 02110
617.723.1700
www.aecom.com

STATE OF MAINE
DEPARTMENT OF TRANSPORTATION

DATE

FED PIN NO: NA

WIN NO: 017163.02 & 017163.03

STATE OF MAINE
DOUGLAS E. REYNOLDS
10/31/22
LICENSED PROFESSIONAL ENGINEER

PROJECT INFORMATION		SIGNATURE
PROGRAM	–	
PROJECT MANAGER	–	ENG. LIN. NUMBER
DESIGNER	AECOM	6251
CONSULTANT	–	DATE
PROJECT RESIDENT	–	JANUARY 17, 2022
CONTRACTOR	–	
PROJECT COMPLETION DATE	–	

MAINE DEPARTMENT OF TRANSPORTATION
ACADIA GATEWAY FACILITY
INTERMODAL AND WELCOME CENTER

STORM DRAIN PROFILES – 1

SHEET NUMBER
C308

U:\1826.05_AECOM_Acadia Gateway Center_2021 Construction Documents\Z - CAD\DWG\1826-05-PROFILES.dwg Oct 31, 2022 - 10:19am

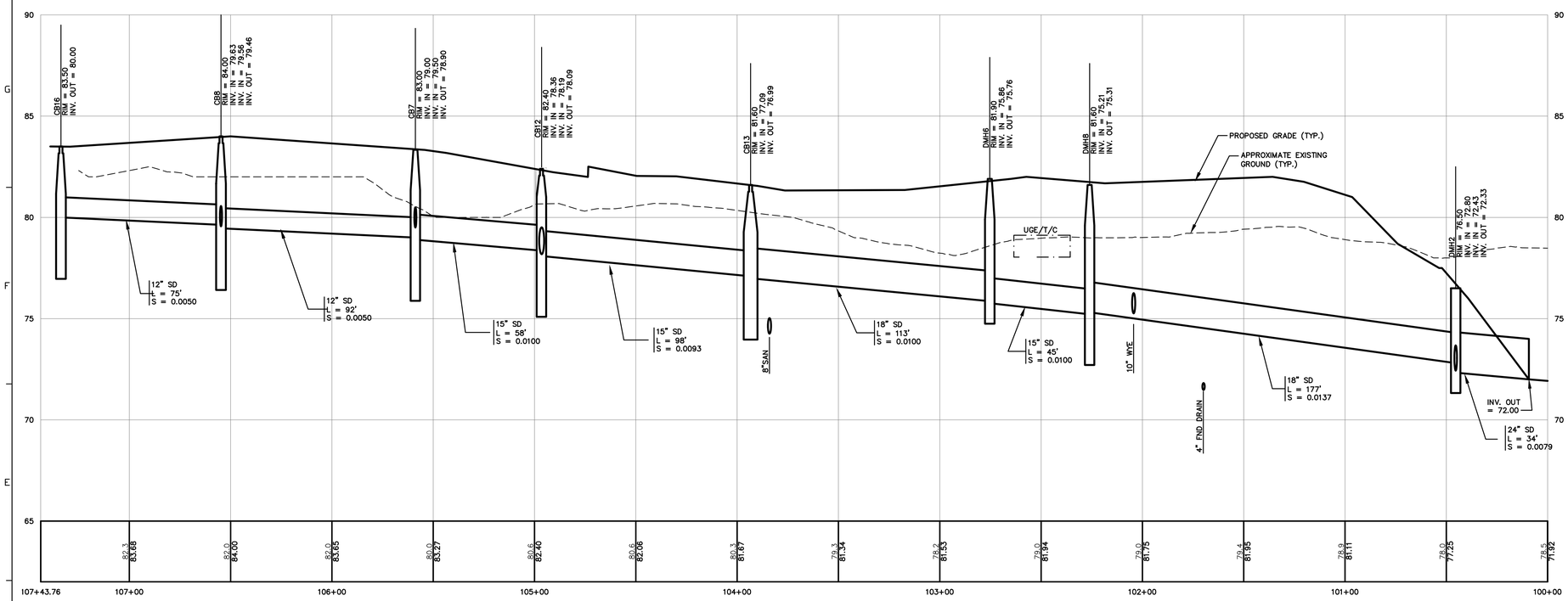

STORM DRAIN PROFILE 'E'

1"=30' HORIZONTAL
1"=3' VERTICAL

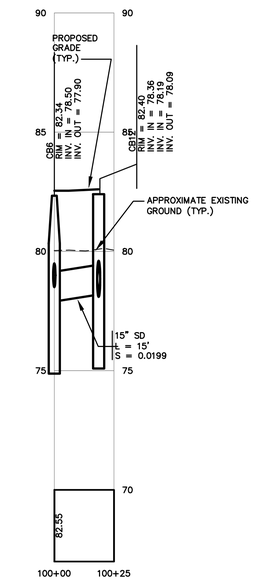

STORM DRAIN PROFILE IE'

1"=30' HORIZONTAL
1"=3' VERTICAL

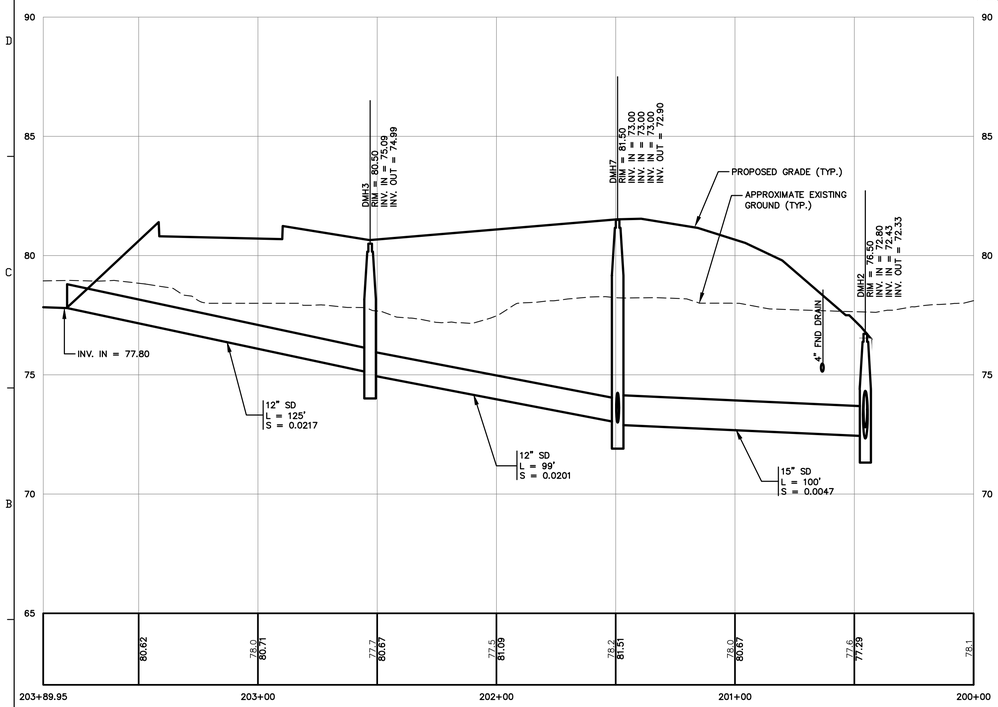

STORM DRAIN PROFILE 'F'

1"=30' HORIZONTAL
1"=3' VERTICAL

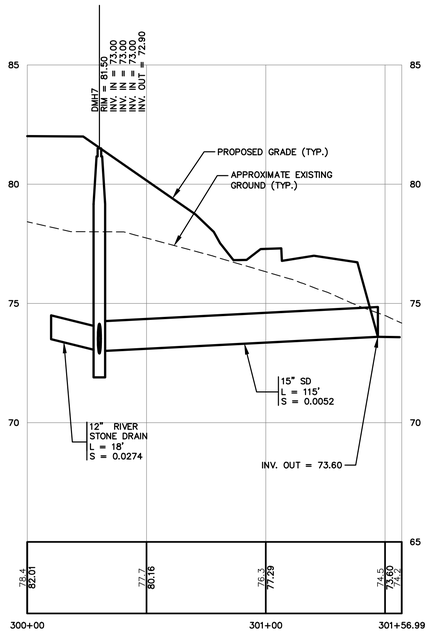

STORM DRAIN PROFILE 'G'

1"=30' HORIZONTAL
1"=3' VERTICAL

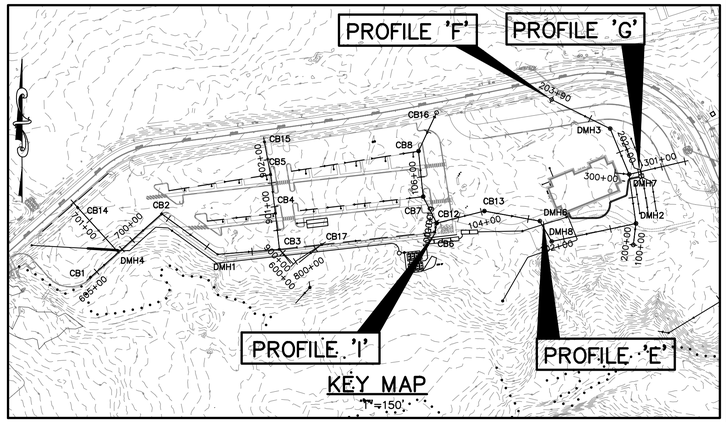

KEY MAP

1"=150'

PROJECT KEY PLAN

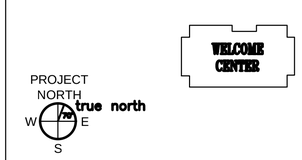

GORRILL PALMER

Relationships. Responsiveness. Results.
www.gorrillpalmer.com
207.772.2515

AECOM

1 FEDERAL STREET, 8TH FLOOR
BOSTON, MA 02110
617.723.1700
www.aecom.com

30 0 15 30 60
1 inch = 30 ft.

STATE OF MAINE
DEPARTMENT OF TRANSPORTATION

DATE

FED PIN NO: NA
WIN NO: 017163.02 & 017163.03

STATE OF MAINE
DOUGLAS R. REYNOLDS
No. 8000
10/31/22
LICENSED PROFESSIONAL ENGINEER

SIGNATURE	
ENG. LIN. NUMBER	6251
DATE	JANUARY 17, 2022

PROJECT INFORMATION	
PROGRAM	-
PROJECT MANAGER	-
DESIGNER	AECOM
CONSULTANT	-
PROJECT RESIDENT	-
CONTRACTOR	-
PROJECT COMPLETION DATE	-

MAINE DEPARTMENT OF TRANSPORTATION
ACADIA GATEWAY FACILITY
INTERMODAL AND WELCOME CENTER

STORM DRAIN PROFILES - 2

SHEET NUMBER
C309

U:\1826.05_AECOM_Acadia Gateway Center_2021 Construction Documents\Z - CAD\DWG\1826-05-PROFILES.dwg Oct 31, 2022 - 10:20am

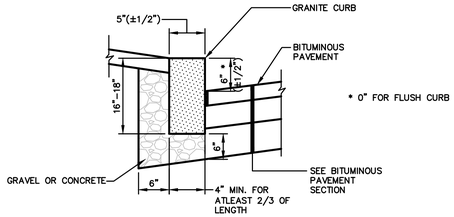

NOTE: VERTICAL GRANITE CURB SHALL MEET THE REQUIREMENTS OF SECTION 609 OF THE MAINE DEPARTMENT OF TRANSPORTATION (MDOT) STANDARD SPECIFICATIONS, LATEST REVISION, AND THE DIMENSIONS SHOWN ON THE DRAWINGS. SLOPED GRANITE CURB SHALL MEET THE REQUIREMENTS OF SECTION 609 OF THE STANDARD SPECIFICATIONS, LATEST REVISION, AND THE DIMENSIONS SHOWN ON THE DRAWINGS.

VERTICAL GRANITE CURB

NOT TO SCALE

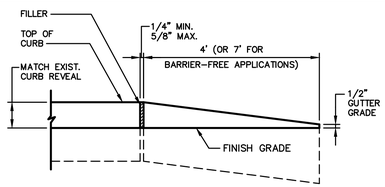

TIPDOWN CURB

NOT TO SCALE

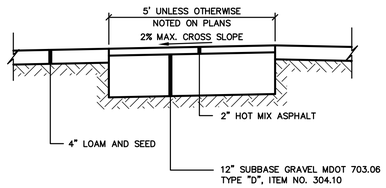

BITUMINOUS WALKWAY

NOT TO SCALE

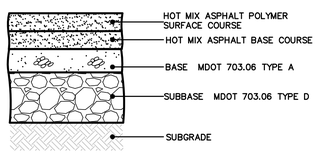

NOTE:
COMPACT SUBGRADE TO 95% MAXIMUM DRY DENSITY IN ACCORDANCE WITH ASTM D-1557

THICKNESS OF LAYERS	
LAYERS	
1.5"	HOT MIX ASPHALT POLYMER SURFACE COURSE
2.5"	HOT MIX ASPHALT BASE COURSE
6"	AGGREGATE BASE GRAVEL MDOT 703.06 TYPE A, ITEM NO. 304.14
15"	AGGREGATE SUBBASE GRAVEL MDOT 703.06 TYPE D, ITEM NO. 304.10

STANDARD BITUMINOUS PAVEMENT SECTION

NOT TO SCALE

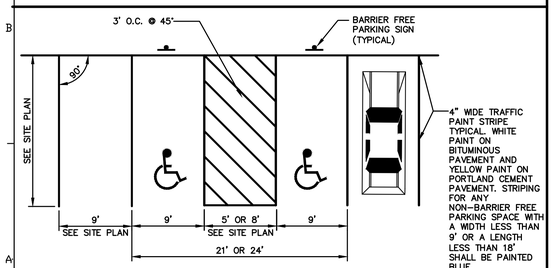

PARKING SPACE DIMENSIONS

NOT TO SCALE

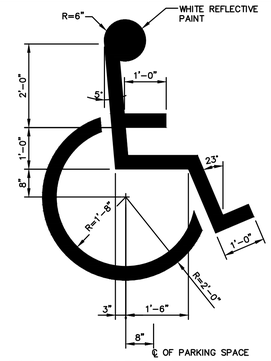

INTERNATIONAL BARRIER FREE SYMBOL

NOT TO SCALE

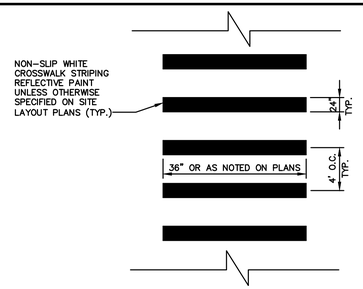

CROSSWALK STRIPING

NOT TO SCALE

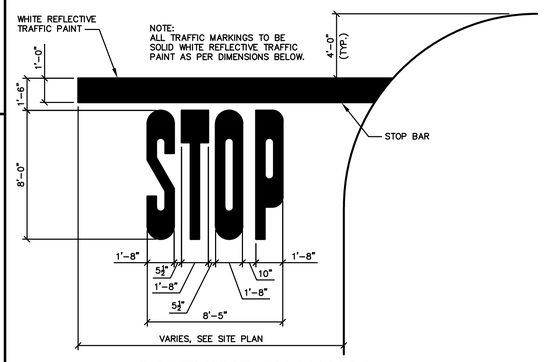

PAVEMENT MARKINGS

NOT TO SCALE

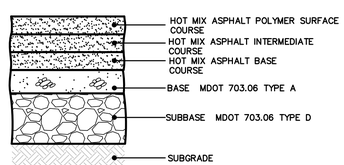

NOTE:
COMPACT SUBGRADE TO 95% MAXIMUM DRY DENSITY IN ACCORDANCE WITH ASTM D-1557

THICKNESS OF LAYERS	
LAYERS	
1.5"	HOT MIX ASPHALT POLYMER SURFACE COURSE
1.5"	HOT MIX ASPHALT INTERMEDIATE COURSE
3"	HOT MIX ASPHALT BASE COURSE
6"	AGGREGATE BASE GRAVEL MDOT 703.06 TYPE A, ITEM NO. 304.14
24"	AGGREGATE SUBBASE GRAVEL MDOT 703.06 TYPE D, ITEM NO. 304.10

HEAVY DUTY BITUMINOUS PAVEMENT SECTION

NOT TO SCALE

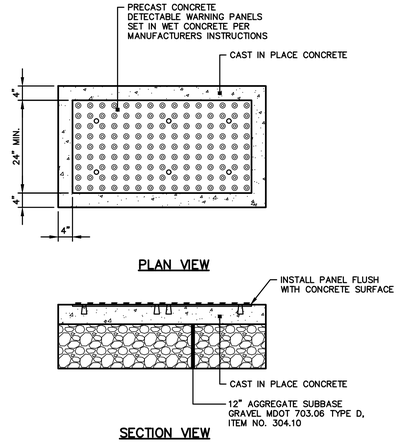

NOTES:

1. CAST IN PLACE CONCRETE SHALL MEET SPECIFICATIONS FOR MAINE D.O.T. CLASS A STRUCTURAL CONCRETE, MINIMUM COMPRESSIVE STRENGTH 4,000 PSI. THE EXPOSED CONCRETE BORDER SHALL RECEIVE A GROOVED EDGE BETWEEN THE PANEL AND CONCRETE, ALONG WITH A UNIFORM BROOM FINISH PERPENDICULAR TO THE FLOW OF PEDESTRIAN TRAFFIC.
2. SIZE: THE DETECTABLE WARNING PANEL(S) SHALL EXTEND 24 INCHES MINIMUM IN THE DIRECTION OF TRAVEL AND THE FULL WIDTH OF THE CURB RAMP, LANDING, OR BLENDED TRANSITION TO THE STREET.
3. ORIENTATION: THE DETECTABLE WARNING PANEL SHALL BE LOCATED SO THAT THE EDGE NEAREST THE CURB LINE IS 6 INCHES MINIMUM AND 8 INCHES MAXIMUM FROM THE CURB LINE. THE PANEL SHALL BE ORIENTED TO THE DIRECTION OF TRAVEL AS IDENTIFIED BY THE POINT OF EGRESS.

SIDEWALK RAMP DETECTABLE WARNING PANEL

N.T.S.

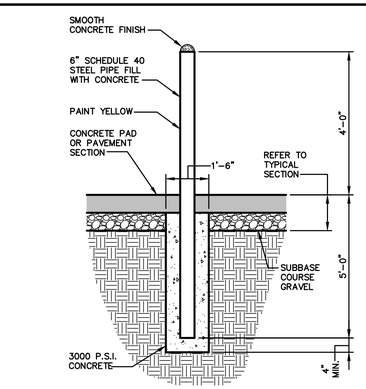

UTILITY PROTECTION BOLLARD

NOT TO SCALE

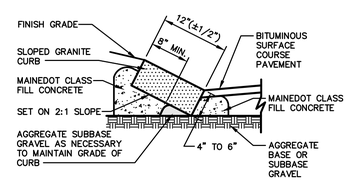

NOTE: CONCRETE IS INCIDENTAL TO THE TYPE 5 SLOPED GRANITE CURB PAY ITEM

SLOPED GRANITE CURB

NOT TO SCALE

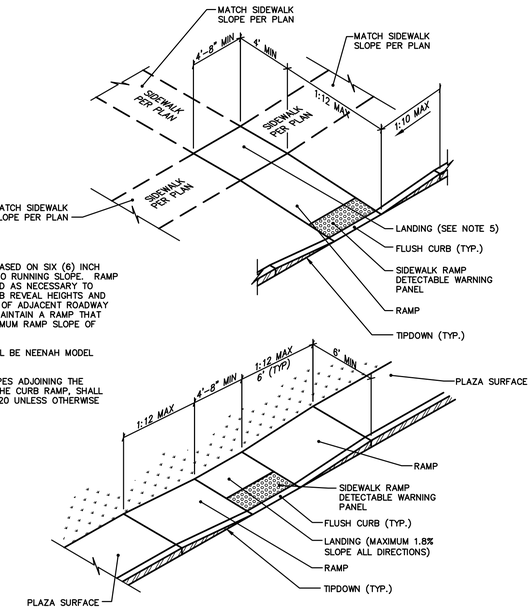

NOTES:

1. CURB RAMP LENGTHS ARE BASED ON SIX (6) INCH CURB REVEAL HEIGHT AND NO RUNNING SLOPE. RAMP LENGTHS SHALL BE ADJUSTED AS NECESSARY TO ACCOMMODATE VARYING CURB REVEAL HEIGHTS AND TO MATCH RUNNING SLOPES OF ADJACENT ROADWAY AND SIDEWALK SLOPES TO MAINTAIN A RAMP THAT DOES NOT EXCEED THE MAXIMUM RAMP SLOPE OF 1:12.
2. DETECTABLE WARNINGS SHALL BE NEENAH MODEL R-4984 OR EQUIVALENT.
3. ALL ACCESSIBLE ROUTE SLOPES ADJOINING THE LANDING AREA, EXCLUDING THE CURB RAMP, SHALL NOT EXCEED A SLOPE OF 1:20 UNLESS OTHERWISE NOTED.

BARRIER FREE RAMP

N.T.S.

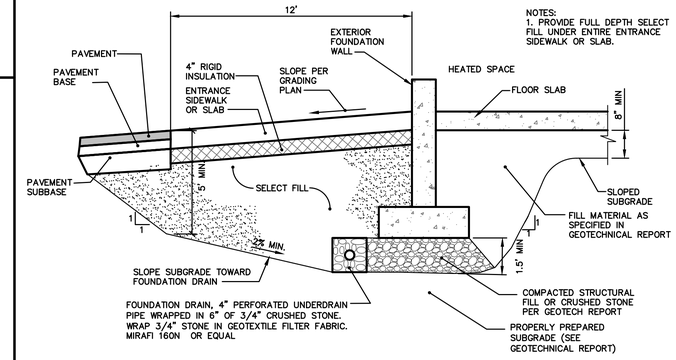

FOUNDATION DRAIN/ENTRANCE SLAB

NOT TO SCALE

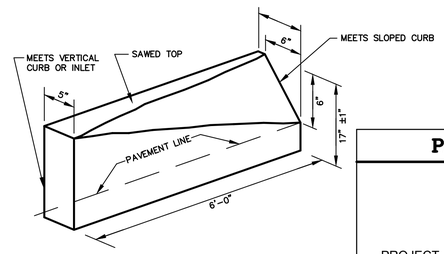

VERTICAL TO SLOPED CURB TRANSITION STONES

NOT TO SCALE

STRUCTURAL FILL	
SIEVE SIZE	% PASSING BY WEIGHT
4"	100
3"	60–100
1/4"	25–90
#40	0–60
#200	0–7

PROJECT KEY PLAN

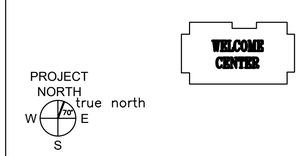

GORRILL PALMER

Relationships. Responsiveness. Results.
www.gorrillpalmer.com
207.772.2515

AECOM

1 FEDERAL STREET, 8TH FLOOR
BOSTON, MA 02110
617.723.1700
www.aecom.com

STATE OF MAINE
DEPARTMENT OF TRANSPORTATION

DATE

FED PIN NO: NA

WIN NO: 017163.02 & 017163.03

STATE OF MAINE
DOUGLAS E. REYNOLDS
10/31/22
LICENSED PROFESSIONAL ENGINEER

SIGNATURE

ENG. LIN. NUMBER 6251

DATE JANUARY 17, 2022

PROJECT INFORMATION	
PROGRAM	–
PROJECT MANAGER	–
DESIGNER	AECOM
CONSULTANT	–
PROJECT RESIDENT	–
CONTRACTOR	–
PROJECT COMPLETION DATE	–

MAINE DEPARTMENT OF TRANSPORTATION
ACADIA GATEWAY FACILITY
INTERMODAL AND WELCOME CENTER

SITE DETAILS

SHEET NUMBER

C401

U:\18226.05_AECOM_Acadia Gateway Center_2021 Construction Documents\Z - CAD\DWG\1826-05-DETAILS.dwg Oct 31, 2022 - 10:12am

N.T.S.

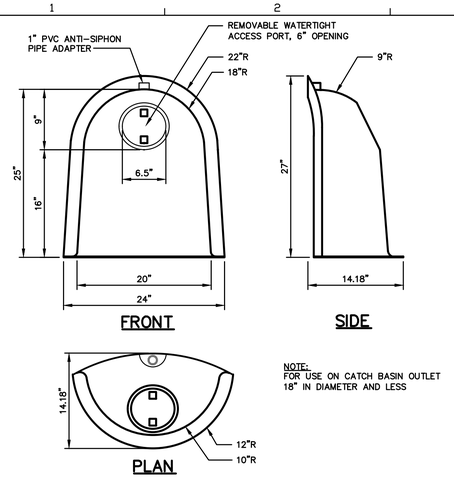

NOTE:
FOR USE ON CATCH BASIN OUTLET 18" IN DIAMETER AND LESS

"THE SNOUT"
NOT TO SCALE

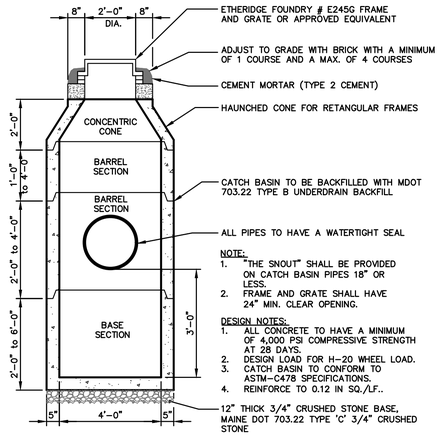

NOTE:
1. "THE SNOUT" SHALL BE PROVIDED ON CATCH BASIN PIPES 18" OR LESS.
2. FRAME AND GRATE SHALL HAVE 24" MIN. CLEAR OPENING.

DESIGN NOTES:
1. ALL CONCRETE TO HAVE A MINIMUM OF 4,000 PSI COMPRESSIVE STRENGTH AT 28 DAYS.
2. DESIGN LOAD FOR H-20 WHEEL LOAD.
3. CATCH BASIN TO CONFORM TO ASTM-C478 SPECIFICATIONS.
4. REINFORCE TO 0.12 IN SQ./LF..

4'-0" PRECAST CATCH BASIN
NOT TO SCALE

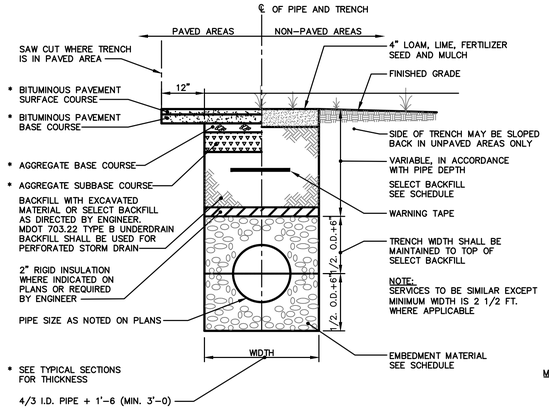

SCHEDULE OF TRENCH BACKFILL		
TYPE OF PIPE	EMBEDMENT MATERIAL	SELECT BACKFILL
CMP DUCTILE IRON RCP	MDOT 703.22 TYPE B UD BACKFILL	MDOT 703.22 TYPE B UD BACKFILL
PVC-SDR 35 HDPE	MDOT 703.22 TYPE C 3/4" CRUSHED STONE	MDOT 703.22 TYPE B UD BACKFILL
PERFORATED PVC-SDR35 HDPE	MDOT 703.22 TYPE C 3/4" CRUSHED STONE	MDOT 703.22 TYPE C 3/4" CRUSHED STONE

NOTE:
1. BRACING AND SHEETING OR OTHER TRENCH PROTECTION TO BE PROVIDED TO MEET APPLICABLE STATE AND O.S.H.A. SAFETY STANDARDS. ALL SUCH TRENCH PROTECTION TO BE THE RESPONSIBILITY OF THE CONTRACTOR.
2. INSTALL WARNING TAPE DIRECTLY ABOVE UTILITIES, 12" BELOW FINISH GRADE.
3. TRACING WIRE SHALL BE INSTALLED OVER FORCEMAIN TO FACILITATE FUTURE LOCATING OF MAIN.

MINIMUM COVER	PIPE
2'-0"	DRAIN (1)
5'-5"	WATER
5'-0"	SEWER

(1) COVER BETWEEN 2' AND 3' SHALL INCLUDE 4" RIGID INSULATION. COVER BETWEEN 3' AND 4' SHALL INCLUDE 2" RIGID INSULATION.

TRENCH SECTION
NOT TO SCALE

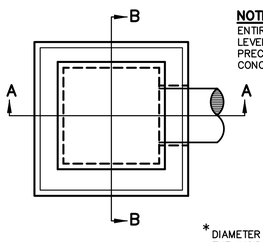

NOTE:
ENTIRE CATCH BASIN WITH EXCEPTION OF LEVELING BRICK FRAME AND GRATE TO BE PRECAST AS SINGLE PORTLAND CEMENT CONCRETE UNIT.

PLAN VIEW

*DIAMETER OF HOLE (D) TO BE 3" LARGER THAN THE INSIDE DIAMETER OF FLEXIBLE PIPE OR THE OUTSIDE DIAMETER OF RIGID PIPE.

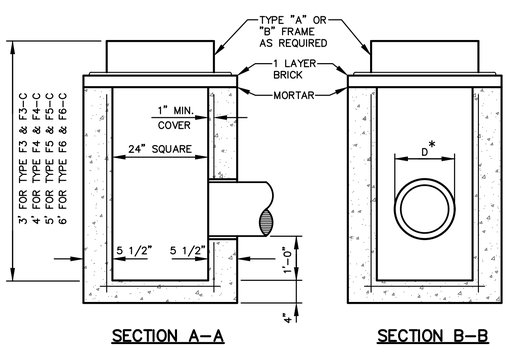

SECTION A-A
SECTION B-B

CATCH BASIN TYPE "F"
NOT TO SCALE

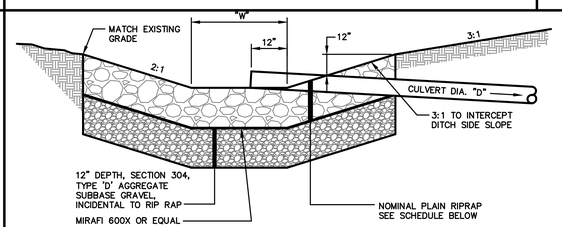

SECTION VIEW

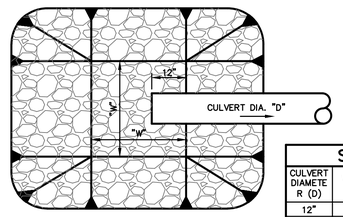

SCHEDULE			
CULVERT DIAMETER (D)	WIDTH (W)	STONE d50	RIPRAP THICKNESS
12"	3'	6"	14"
15"	4'	6"	14"

PLAN VIEW

CULVERT INLET APRON
NOT TO SCALE

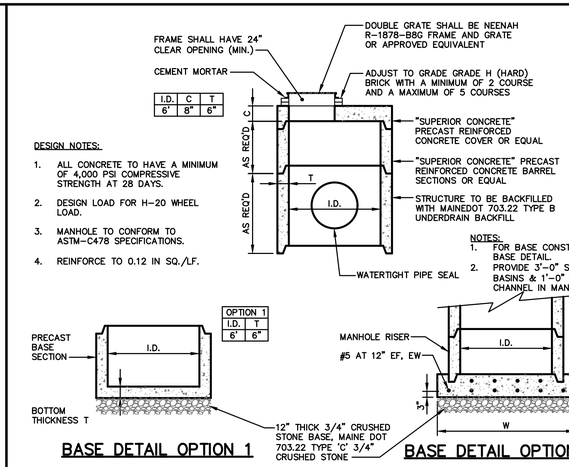

I.D.	C	T
6'	8"	6"

DESIGN NOTES:
1. ALL CONCRETE TO HAVE A MINIMUM OF 4,000 PSI COMPRESSIVE STRENGTH AT 28 DAYS.
2. DESIGN LOAD FOR H-20 WHEEL LOAD.
3. MANHOLE TO CONFORM TO ASTM-C478 SPECIFICATIONS.
4. REINFORCE TO 0.12 IN SQ./LF.

NOTES:
1. FOR BASE CONSTRUCTION SEE BASE DETAIL.
2. PROVIDE 3'-0" SUMP FOR CATCH BASINS & 1'-0" FOR BRICK CHANNEL IN MANHOLES

OPTION 1	
I.D.	T
6'	6"

OPTION 2	
I.D.	W
6'	9'

BASE DETAIL OPTION 1
BASE DETAIL OPTION 2

6' DIAMETER STORM DRAIN CATCH BASIN
NOT TO SCALE

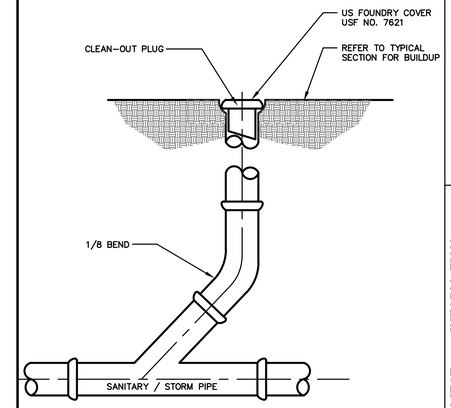

CLEANOUT
NOT TO SCALE

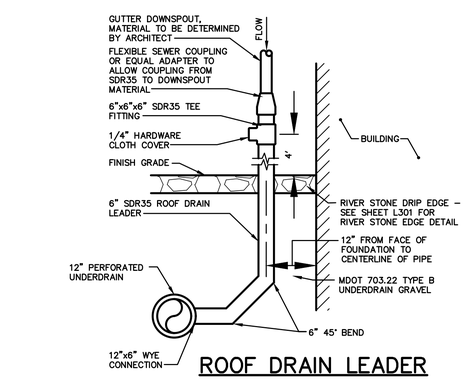

ROOF DRAIN LEADER
NOT TO SCALE

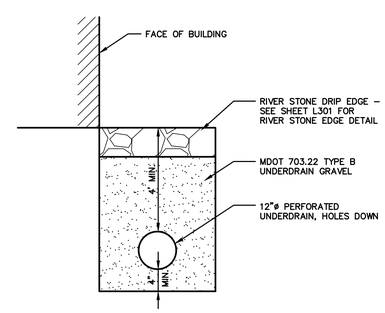

RIVER STONE EDGE WITH UNDERDRAIN
NOT TO SCALE

PROJECT KEY PLAN

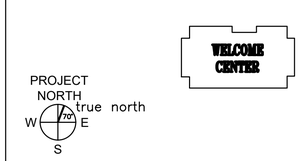

GORRILL PALMER
Relationships. Responsiveness. Results.
www.gorrillpalmer.com
207.772.2515

AECOM
1 FEDERAL STREET, 8TH FLOOR
BOSTON, MA 02110
617.723.1700
www.aecom.com

STATE OF MAINE
DEPARTMENT OF TRANSPORTATION

DATE

FED PIN NO: NA

WIN NO: 017163.02 & 017163.03

STATE OF MAINE
DOUGLAS R. REYNOLDS
10/31/22
LICENSED PROFESSIONAL ENGINEER

SIGNATURE

ENG. LIN. NUMBER 6251

DATE JANUARY 17, 2022

PROJECT INFORMATION	
PROGRAM	-
PROJECT MANAGER	-
DESIGNER	AECOM
CONSULTANT	-
PROJECT RESIDENT	-
CONTRACTOR	-
PROJECT COMPLETION DATE	-

MAINE DEPARTMENT OF TRANSPORTATION
ACADIA GATEWAY FACILITY
INTERMODAL AND WELCOME CENTER

UTILITY DETAILS

SHEET NUMBER
C402

U:\1826.05_AECOM_Acadia Gateway Center_2021 Construction Documents\Z - CAD\DWG\1826-05-DETAILS.dwg Oct 31, 2022 - 10:12am

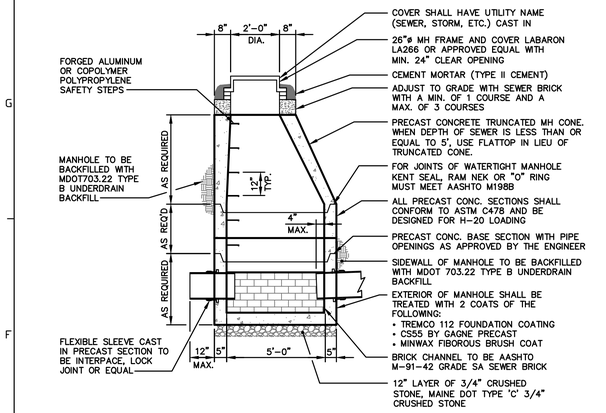

4'-0" PRECAST SEWER MANHOLE AND DRAIN MANHOLE

NOT TO SCALE

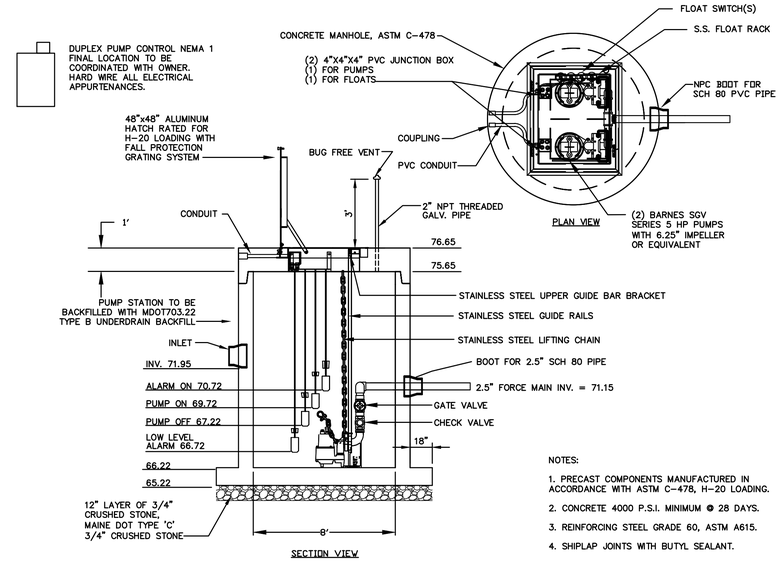

NOTES:

1. PRECAST COMPONENTS MANUFACTURED IN ACCORDANCE WITH ASTM C-478, H-20 LOADING.
2. CONCRETE 4000 P.S.I. MINIMUM @ 28 DAYS.
3. REINFORCING STEEL GRADE 60, ASTM A615.
4. SHIPLAP JOINTS WITH BUTYL SEALANT.

DUPLEX PUMP STATION

NOT TO SCALE

PUMP STATION	SHEET LOCATION		PUMP STATION SETTING DATA				PUMP CONTROL SETTING DATA				PUMP OPERATING CONDITIONS				
DESCRIPTION	UTILITY PLAN SHEET	PROFILE SHEET	TOP OF COVER SLAB	BOTTOM OF BASE SLAB	8" INLET INVERT INVERT	2.5" FM OUTLET INVERT	LOW LEVEL ALARM	PUMP OFF	PUMP ON	ALARM ON	NUMBER OF PUMPS	PUMP DISCHARGE	PUMP RATE	TOTAL DYNAMIC HEAD	PUMP H.P.
ACADIA GATEWAY FACILITY	C202	C307	76.65	65.22	71.95	71.15	66.72	67.22	69.72	71.95	2	2.5"	65 GPM	126 FT.	5.0

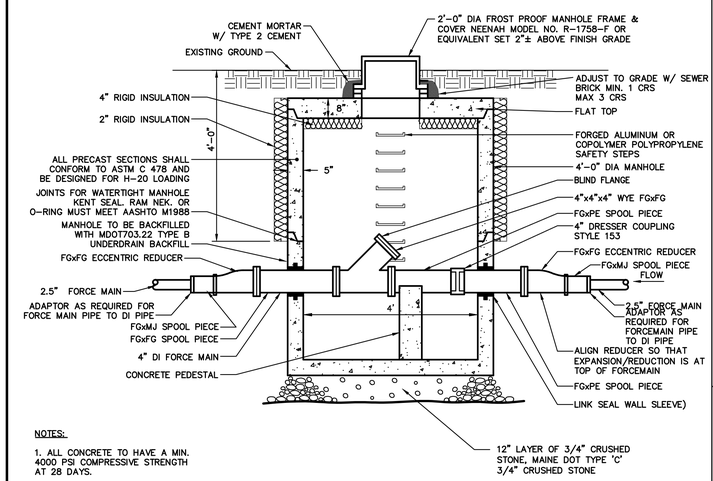

NOTES:

1. ALL CONCRETE TO HAVE A MIN. 4000 PSI COMPRESSIVE STRENGTH AT 28 DAYS.
2. DESIGN FOR H-20 WHEEL LOADINGS
3. REINFORCE TO 0.12 IN. SQ./FT.

4'ø CLEANOUT MANHOLE

NOT TO SCALE

SEPTIC TANK NOTES:

1. SEPTIC TANK SHALL CONSIST OF TWO TANKS IN SERIES WITH A MINIMUM TOTAL CAPACITY OF 20,000 GALLONS.
2. TANKS SHALL HAVE A MINIMUM OF 5 FEET OF COVER BUT, MAY HAVE 3 FEET MINIMUM COVER WITH 4" RIGID INSULATION OVER THE TOP AND SIDES OF TANK WHERE COVER IS LESS THAN 5 FEET. TANK SHALL INCLUDE ALL NECESSARY ACCESS RISERS TO GRADE.
3. TANKS SHALL BE INSTALLED WITH 12" OF 3/4" CRUSHED STONE ON SIDES AND BELOW TANKS. 2" RIGID INSULATION SHALL BE INSTALLED OVER TOP OF TANKS AND ON SIDES OF TANKS TO A DEPTH OF 12" BELOW THE TOP OF TANKS.
4. EACH TANK SHALL BE EQUIPPED WITH A 6" SCHEDULE 40 PVC VENT PIPE. VENTS SHALL BE EQUIPPED WITH BUG SCREENS.
5. PIPES SHALL HAVE A MINIMUM COVER OF 5'-5" UNLESS INSULATED AS NEEDED.

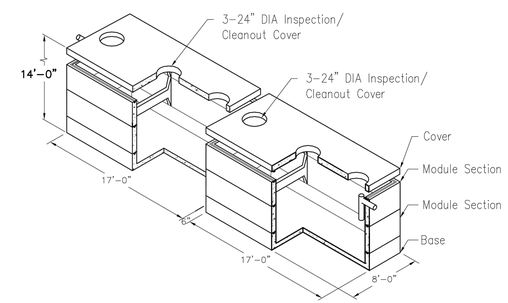

20,000 GALLON SEPTIC TANK DETAIL (TANK A)

NOT TO SCALE

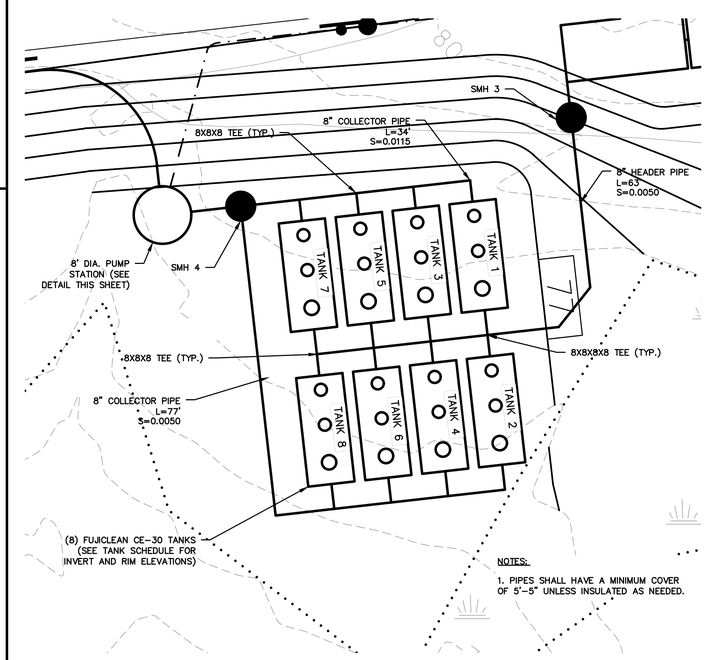

NOTES:

1. PIPES SHALL HAVE A MINIMUM COVER OF 5'-5" UNLESS INSULATED AS NEEDED.

FUJICLEAN PRETREATMENT UNITS

1"=10'

FUJICLEAN TANK SCHEDULE			
TANK ID	RIM ELEVATION	INV.IN	INV.OUT
1	76.56	72.71	72.53
2	76.56	72.71	72.53
3	76.52	72.67	72.49
4	76.52	72.67	72.49
5	76.48	72.63	72.45
6	76.48	72.63	72.45
7	76.44	72.59	72.41
8	76.44	72.59	72.41

EQUALIZING TANK NOTES:

1. EQUALIZING TANK SHALL CONSIST OF FOUR TANKS IN SERIES WITH A MINIMUM TOTAL CAPACITY OF 20,000 GALLONS. (3 TANKS HAVE BEEN SHOWN IN THIS DETAIL FOR CLARITY.
2. TANKS SHALL HAVE A MINIMUM OF 5 FEET OF COVER BUT, MAY HAVE 3 FEET MINIMUM COVER WITH 4" RIGID INSULATION OVER THE TOP AND SIDES OF TANK WHERE COVER IS LESS THAN 5 FEET. TANK SHALL INCLUDE ALL NECESSARY ACCESS RISERS TO GRADE.
3. TANKS SHALL BE INSTALLED WITH 12" OF 3/4" CRUSHED STONE ON SIDES AND BELOW TANKS. 2" RIGID INSULATION SHALL BE INSTALLED OVER TOP OF TANKS AND ON SIDES OF TANKS TO A DEPTH OF 12" BELOW THE TOP OF TANKS.
4. EACH TANK SHALL BE EQUIPPED WITH A 6" SCHEDULE 40 PVC VENT PIPE. VENTS SHALL BE EQUIPPED WITH BUG SCREENS.
5. PIPES SHALL HAVE A MINIMUM COVER OF 5'-5" UNLESS INSULATED AS NEEDED.

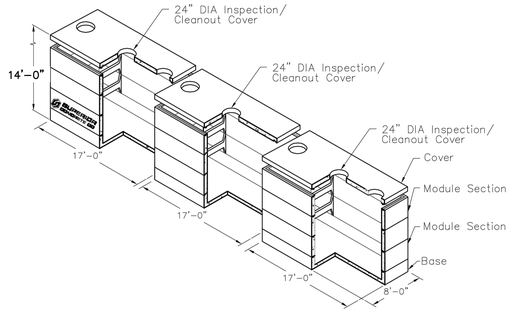

20,000 GALLON EQUALIZING TANK DETAIL (TANK B)

NOT TO SCALE

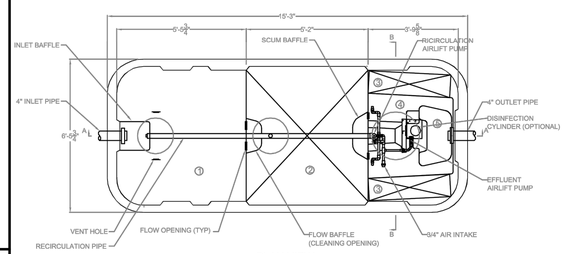

	CHAMBER	Volume (gal)
1	Sedimentation Chamber	1,200
2	Anaerobic Filtration Chamber	1,198
3	Aerobic Contact Filtration Chamber	550
4	Clarification Chamber	268
5	Disinfection Chamber	17
	Total Volume	3,233

SPECIFICATIONS	
Anaerobic Media	PP / PE
Board Type Aerobic Media	PVC / PP / PE
Aerobic Media	PP / PE
Blower	10.6 cfm
Tank	FRP
Piping	PVC / PP / PE
Access Covers	Plastic / Cast Iron
Disinfectant (Optional)	Chlorine Tablets

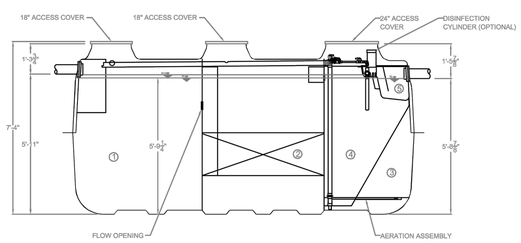

SECTION A-A VIEW

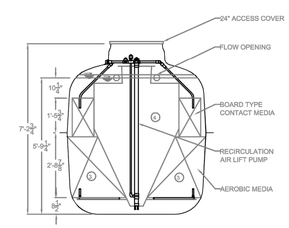

SECTION B-B VIEW

NOTES:

1. 30" RISERS SHALL BE INSTALLED TO BRING ACCESS COVERS TO GRADE. RISERS SHALL BE WATER TIGHT IN ACCORDANCE WITH THE MANUFACTURERS SPECIFICATIONS.
2. TANKS SHALL BE INSULATED WITH 4" RIGID INSULATION ON TOP AND SIDES OF TANK WHERE COVER IS LESS THAN 5'-5".

FujiClean USA "Toward Clean Water..."

CE-30

Structural Drawing

DATE: 03/21/2021 SCALE: 1/4" = 1"

FUJICLEAN CE-30 TANK

NOT TO SCALE

PROJECT KEY PLAN

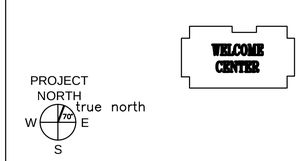

GORRILL PALMER

Relationships. Responsiveness. Results.
www.gorrillpalmer.com
207.772.2515

AECOM

1 FEDERAL STREET, 8TH FLOOR
BOSTON, MA 02110
617.723.1700
www.aecom.com

STATE OF MAINE
DEPARTMENT OF TRANSPORTATION

DATE

FED PIN NO: NA

WIN NO: 017163.02 & 017163.03

STATE OF MAINE — DOUGLAS B. REYNOLDS — 10/31/22 — LICENSED PROFESSIONAL ENGINEER

SIGNATURE

ENG. LIN. NUMBER 6251

DATE JANUARY 17, 2022

PROJECT INFORMATION

PROGRAM	-
PROJECT MANAGER	-
DESIGNER	AECOM
CONSULTANT	-
PROJECT RESIDENT	-
CONTRACTOR	-
PROJECT COMPLETION DATE	-

MAINE DEPARTMENT OF TRANSPORTATION
ACADIA GATEWAY FACILITY
INTERMODAL AND WELCOME CENTER

UTILITY DETAILS

SHEET NUMBER

C403

U:\1826.05_AECOM_Acadia Gateway Center_2021 Construction Documents\Z - CAD\DWG\1826-05-DETAILS.dwg Oct 31, 2022 - 10:17am

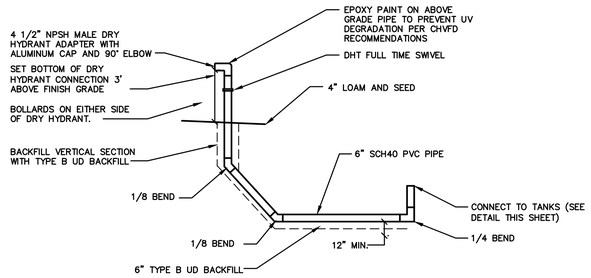

DRY HYDRANT (BID ALTERNATE 1) NOTES:

1. DRY HYDRANT COMPONENTS SHALL BE FROM KOCHECK COMPANY INC, PUTNAM, CONNECTICUT.
2. ALL PIPE AND FITTINGS SHALL BE SCH40 PVC.
3. CONNECT PVC PIPE AND FITTINGS USING A TETRAHYDROFURAN (THF) PRIMER AND A PVC CEMENT WITH BETWEEN 800-1000 CENTIPOISE VISCOSITY. ALL PURPOSE PVC CEMENT SHALL NOT BE USED.
4. ALLOW PVC CEMENT TO DRY THOROUGHLY BEFORE INSTALLING IN WATER.
5. INSTALL ABOVE GRADE SECTION PLUMB. INSTALL BELOW PIPE GRADE LEVEL OR SLOPING DOWN TOWARDS THE TANK.
6. APPLY TWO COATS OF EPOXY PAINT TO ABOVE GROUND PIPE. COORDINATE WITH FIRE DEPARTMENT.

DRY HYDRANT DETAIL

NOT TO SCALE

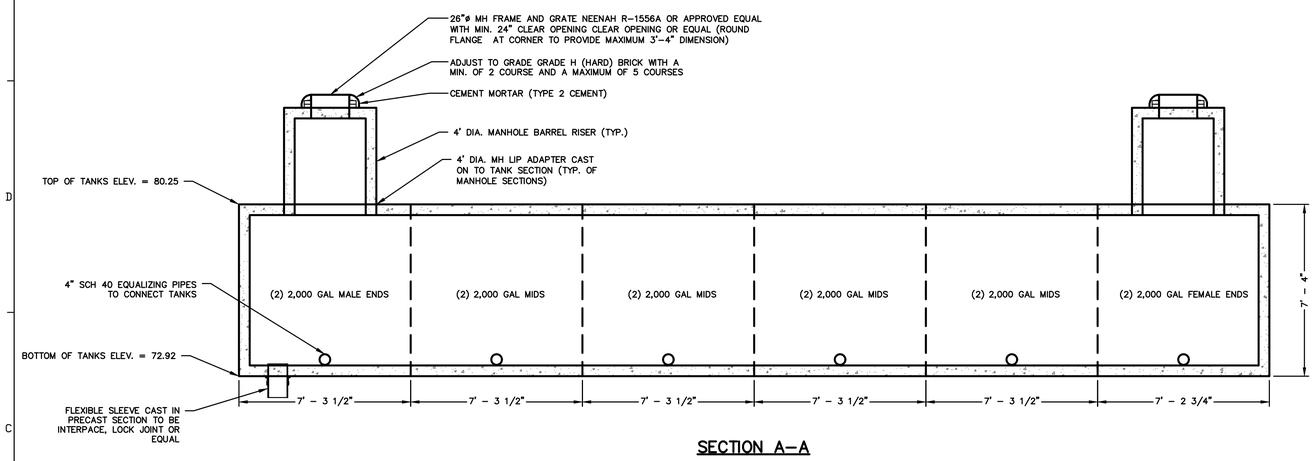

SECTION A–A

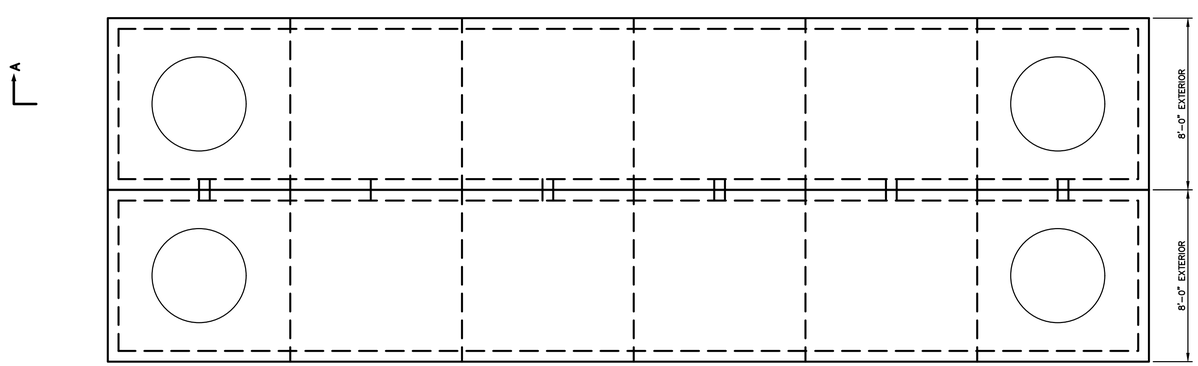

PLAN VIEW

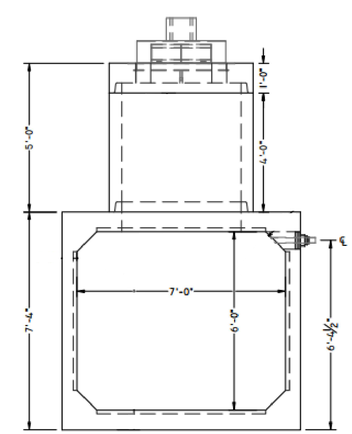

END VIEW

24,000 GALLON FIRE WATER STORAGE TANK

NOT TO SCALE

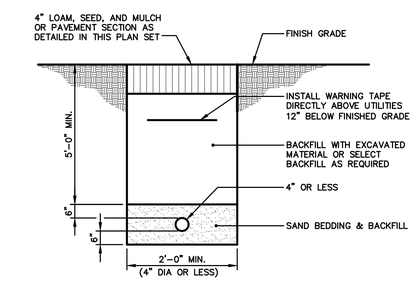

WATER SERVICE TRENCH SECTION

NOT TO SCALE

PROJECT KEY PLAN

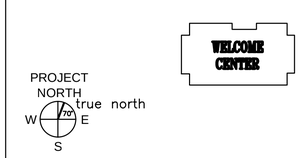

GORRILL PALMER

Relationships. Responsiveness. Results.
www.gorrillpalmer.com
207.772.2515

AECOM
1 FEDERAL STREET, 8TH FLOOR
BOSTON, MA 02110
617.723.1700
www.aecom.com

STATE OF MAINE
DEPARTMENT OF TRANSPORTATION

DATE

FED PIN NO: NA

WIN NO: 017163.02 & 017163.03

STATE OF MAINE
DOUGLAS R. REYNOLDS
No. 6251
10/31/22
LICENSED
PROFESSIONAL ENGINEER

SIGNATURE

ENG. LIN. NUMBER 6251

DATE JANUARY 17, 2022

PROJECT INFORMATION	
PROGRAM	–
PROJECT MANAGER	–
DESIGNER	AECOM
CONSULTANT	–
PROJECT RESIDENT	–
CONTRACTOR	–
PROJECT COMPLETION DATE	–

MAINE DEPARTMENT OF TRANSPORTATION
ACADIA GATEWAY FACILITY
INTERMODAL AND WELCOME CENTER

UTILITY DETAILS

SHEET NUMBER
C404

U:\1826.05_AECOM_Acadia Gateway Center_2021 Construction Documents\Z - CAD\DWG\1826-05-DETAILS.dwg Oct 31, 2022 - 10:16am

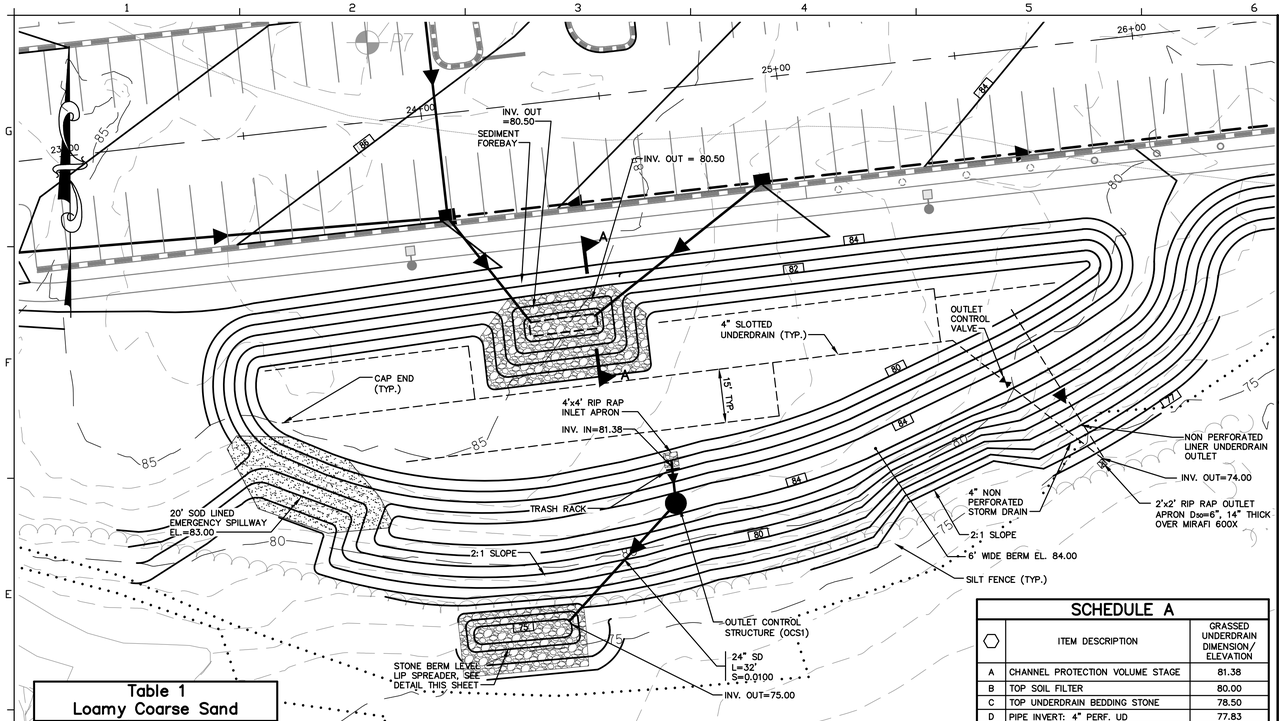

GRASSED UNDERDRAIN PROJECT DETAILS

1"=20'

Table 1 Loamy Coarse Sand	
SIEVE SIZE	% PASSING BY WEIGHT
#10	85–100
#20	70–100
#60	15–40
#200	8–15
#200 CLAY SIZE	<2.0

Table 2 MEDOT Specifications for Underdrain Type B (MEDOT #703.22)	
SIEVE SIZE	% PASSING BY WEIGHT
1"	90–100
1/2"	75–100
#4	50–100
#20	15–80
#50	0–15
#200	0–5

Table 3 Sandy Loam Topsoil	
SIEVE SIZE	% PASSING BY WEIGHT
#4	75–95
#10	60–90
#40	35–85
#200	20–70
#200 CLAY SIZE	<2.0

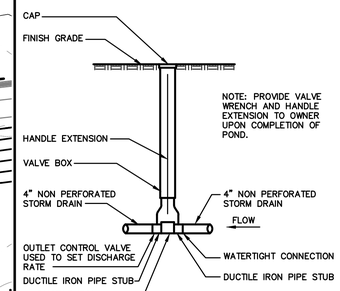

OUTLET VALVE

NOT TO SCALE

CONSTRUCTION OVERSIGHT

INSPECTION OF THE FILTER BASIN SHALL BE PROVIDED FOR EACH PHASE OF CONSTRUCTION BY THE DESIGN ENGINEER WITH REQUIRED REPORTING TO THE DEP. AT A MINIMUM, INSPECTIONS WILL OCCUR:

1. AFTER PRELIMINARY CONSTRUCTION OF THE FILTER GRADES AND ONCE THE UNDERDRAIN PIPES ARE INSTALLED BUT NOT BACKFILLED.
2. AFTER THE DRAINAGE LAYER IS CONSTRUCTED AND PRIOR TO THE INSTALLATION OF THE FILTER MEDIA.
3. AFTER THE FILTER MEDIA HAS BEEN INSTALLED AND SEEDED.
4. AFTER ONE YEAR TO INSPECT HEALTH OF THE VEGETATION AND MAKE CORRECTIONS.
5. ALL MATERIAL USED FOR THE CONSTRUCTION OF THE FILTER BASIN WILL BE APPROVED BY THE DESIGN ENGINEER AFTER TESTS BY A CERTIFIED LABORATORY SHOW THAT THEY ARE PASSING DEP SPECIFICATIONS.

NOTE: CONTRACTOR SHALL NOTIFY PROJECT ENGINEER 48 HOURS PRIOR TO THE MILESTONES LISTED ABOVE TO ALLOW FOR INSPECTION.

SCHEDULE A

⬡	ITEM DESCRIPTION	GRASSED UNDERDRAIN DIMENSION/ ELEVATION
A	CHANNEL PROTECTION VOLUME STAGE	81.38
B	TOP SOIL FILTER	80.00
C	TOP UNDERDRAIN BEDDING STONE	78.50
D	PIPE INVERT: 4" PERF. UD	77.83
E	BOTTOM UNDERDRAIN BEDDING	77.50
F	LINER UNDERDRAIN INVERT	76.83

BERM STONE SIZE	
SIEVE DESIGNATION (US CUSTOMARY)	PERCENT BY WEIGHT PASSING
12 IN	100
6 IN	84–100
3 IN	68–83
1 IN	42–55
NO. 4	8–12

LEVEL LIP SPREADER		
LEVEL LIP	ELEVATION	LENGTH
1	75.0	25'

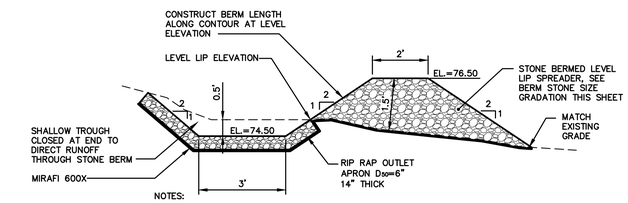

NOTES:

1. PRIOR TO CONSTRUCTION OF ANY ONSITE DRAINAGE FEATURES, THE CONTRACTOR SHALL STAKE OUT THE LEVEL LIP SPREADERS FOR REVIEW BY GORRILL–PALMER. THE CONTRACTOR SHALL NOTIFY GORRILL–PALMER WHEN STAKE OUT IS COMPLETE, AND PROVIDE GROUND SURVEYED ELEVATIONS OF THE LEVEL LIP SPREADER LOCATION. GORRILL–PALMER WILL CONDUCT A SITE WALK WITHIN 48 HOURS TO CONFIRM LOCATION AND ORIENTATION TO VERIFY DESIGN INTENT.

STONE BERM LEVEL LIP SPREADER

NOT TO SCALE

GRASSED UNDERDRAIN NOTES:

SOIL SPECIFICATIONS:

1. THE SOIL FILTER MEDIA SHALL BE A LAYERED SYSTEM CONSISTING OF THE FOLLOWING FROM THE BOTTOM:
   A. 12" OF LOAMY COARSE SAND, SEE TABLE 1.
   B. 2" LAYER OF TOPSOIL (SEE "C" BELOW) ROTOTILLED INTO THE LOAMY COARSE SAND LAYER.
   C. 6" OF NON–CLAYEY, LOAMY TOPSOIL SUCH AS USDA SANDY LOAM TOPSOIL WITH 5–8% HUMIFIED ORGANIC MATTER. SUPERHUMUS OR EQUIVALENT MAY BE ADDED TO THE TOPSOIL TO INCREASE ORGANIC CONTENT, SEE TABLE 3.
2. SOIL FILTER MEDIA MIXTURE SHALL HAVE A PERMEABILITY OF 2.4 IN./HR. TO 4 IN./HR UPON COMPACTION BETWEEN 90% AND 92% STANDARD PROCTOR (ASTM D698).

SUBMITTALS:

1. SUBMIT RESULTS OF FIELD AND LABORATORY TESTING TO PROJECT ENGINEER.
2. SUBMIT 75 lb. SAMPLE OF EACH TYPE OF MATERIAL: SUBMIT IN AIR TIGHT CONTAINERS TO PROJECT ENGINEER.
3. THE FOLLOWING MATERIAL SHALL BE SUBMITTED:
   A. SAND.
   B. UNDERDRAIN BEDDING MATERIAL.
4. PERFORM A SIEVE ANALYSIS CONFORMING TO ASTM C136 – STANDARD TEST METHOD FOR SIEVE ANALYSIS OF FINE AND COARSE AGGREGATES; 1996a ON EACH TYPE OF THE SAMPLE MATERIAL AND SUBMIT RESULTS TO PROJECT ENGINEER.
5. PERFORM A PERMEABILITY TEST ON THE SOIL FILTER MEDIA MIXTURE CONFORMING TO ASTM D2434 WITH THE MIXTURE COMPACTED TO 90% TO 92% OF MAXIMUM DRY DENSITY BASED ON ASTM D698. SUBMIT RESULTS TO THE PROJECT ENGINEER.
6. PERFORM ONE COMPACTION DENSITY TEST ON THE IN PLACE SOIL FILTER FOR EVERY 2,000 SQUARE FEET OF FILTER SURFACE AREA. TEST SHALL CONFORM TO ASTM D 2922 – STANDARD TEST METHODS FOR DENSITY OF SOIL AND SOIL–AGGREGATE IN PLACE BY NUCLEAR METHODS (SHALLOW DEPTH); 1996. SUBMIT RESULTS TO THE PROJECT ENGINEER.

CONSTRUCTION:

1. SOIL FILTER MEDIA AND UNDERDRAIN BEDDING MATERIAL SHALL BE COMPACTED TO BETWEEN 90% AND 92% STANDARD PROCTOR.
2. SLOTTED UNDERDRAIN PIPE SHALL BE SLOTTED 4" SCHEDULE 40 OR SDR 35 PVC PIPE. SPACED 15 FEET ON CENTER MAXIMUM.
3. TRIBUTARY AREAS SHALL BE STABILIZED PRIOR TO INSTALLATION OF THE SOIL FILTER MEDIA MIXTURE AND UNDERDRAIN. STABILIZED IS DEFINED AS PAVED IF IN A PARKING AREA OR ROADWAY, AND 90% GRASS CATCH IF IN A VEGETATED AREA.
4. OUTFLOW OF THE VEGETATED UNDERDRAIN SHALL BE CONTROLLED BY A 4" DUCTILE IRON GATE VALVE WITH VALVE WRENCH AND EXTENSION (AVAILABLE FROM E.J. PRESCOTT OR EQUIVALENT). A THREE PIECE VALVE BOX (AVAILABLE FROM E.J. PRESCOTT OR EQUIVALENT) SHALL BE INSTALLED OVER THE VALVE.
5. ALL EQUIPMENT USED WITHIN THE LIMITS OF THE VEGETATED UNDERDRAIN SHALL BE LOW GROUND PRESSURE VEHICLES (LESS THAN 2.0 PSI) WHEN FULLY LOADED.
6. UPON COMPLETION OF THE INSTALLATION OF THE SOIL FILTER MEDIA AND THE ESTABLISHMENT OF A 90% CATCH OF GRASS OVER THE FILTER MEDIA, THE CONTRACTOR SHALL FLOOD THE VEGETATED UNDERDRAIN TO THE DESIGN ELEVATION WITH CLEAN WATER AND ADJUST THE VALVE TO OBTAIN A 24 HOUR TO 32 HOUR RELEASE TIME.

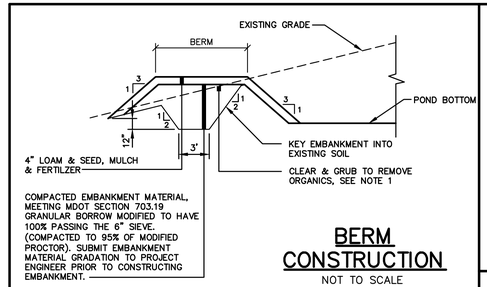

NOTES:

1. EMBANKMENT FOOTPRINT SHALL BE CLEARED OF TRASH/DEBRIS AND ANY ROCKS GREATER THAN 6", BE FREE OF ANY STANDING WATER, BE GRADED TO BE NO STEEPER THAN 1H:1V, BE SCARIFIED PRIOR TO EMBANKMENT FILL PLACEMENT, AND BE INSPECTED AND APPROVED BY THE PROJECT ENGINEER BEFORE FILL PLACEMENT BEGINS.

BERM CONSTRUCTION

NOT TO SCALE

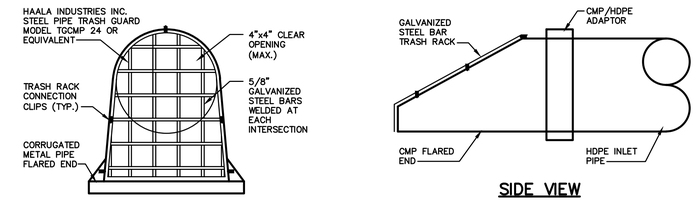

FRONT VIEW

SIDE VIEW

TRASH RACK

NOT TO SCALE

NOTE:
TWO UNDERDRAIN SYSTEMS ARE REQUIRED FOR THE GRASSED UNDERDRAIN. ONE SYSTEM DRAINS THE SOIL MEDIA, AND ONE SYSTEM DRAINS THE LINER. THE LINER UNDERDRAIN IS NOT SHOWN ON THE PLAN VIEW FOR CLARITY PURPOSES. SEE GRASSED UNDERDRAIN DETAIL.

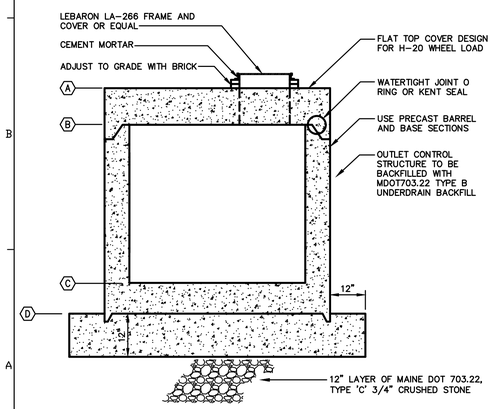

SECTION A–A

OUTLET CONTROL STRUCTURE 1 (OCS1)

SEE SCHEDULE B

NOT TO SCALE

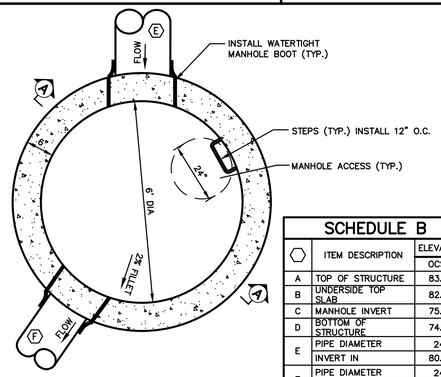

SCHEDULE B

⬡	ITEM DESCRIPTION	ELEVATION
		OCS 1
A	TOP OF STRUCTURE	83.50
B	UNDERSIDE TOP SLAB	82.83
C	MANHOLE INVERT	75.32
D	BOTTOM OF STRUCTURE	74.32
E	PIPE DIAMETER	24"
	INVERT IN	80.00
F	PIPE DIAMETER	24"
	INVERT OUT	75.32

PLAN VIEW

6' OUTLET CONTROL STRUCTURE 1 (OCS1)

SEE SCHEDULE B

NOT TO SCALE

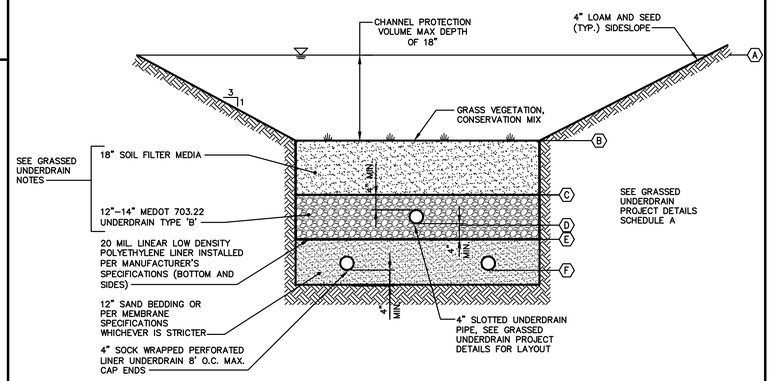

GRASSED UNDERDRAIN DETAIL

NOT TO SCALE

GRASS VEGETATION	
CREEPING RED FESCUE	20 LBS/ACRE
TALL FESCUE	20 LBS/ACRE
BIRDSFOOT TREEFOIL	8 LBS/ACRE

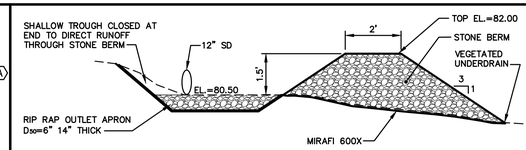

SEDIMENT FOREBAY – SECTION A–A

NOT TO SCALE

BERM STONE SIZE	
SIEVE DESIGNATION (US CUSTOMARY)	PERCENT BY WEIGHT PASSING
12 IN	100
6 IN	84–100
3 IN	68–83
1 IN	42–55
NO. 4	8–12

PROJECT KEY PLAN

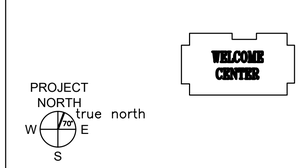

GORRILL PALMER

Relationships. Responsiveness. Results.
www.gorrillpalmer.com
207.772.2515

AECOM

1 FEDERAL STREET, 8TH FLOOR
BOSTON, MA 02110
617.723.1700
www.aecom.com

STATE OF MAINE
DEPARTMENT OF TRANSPORTATION

DATE

FED PIN NO: NA

WIN NO: 017163.02 & 017163.03

STATE OF MAINE
DOUGLAS E. REYNOLDS
10/31/22
LICENSED PROFESSIONAL ENGINEER

SIGNATURE

ENG. LIN. NUMBER 6251

DATE JANUARY 17, 2022

PROJECT INFORMATION	
PROGRAM	–
PROJECT MANAGER	–
DESIGNER	AECOM
CONSULTANT	–
PROJECT RESIDENT	–
CONTRACTOR	–
PROJECT COMPLETION DATE	–

MAINE DEPARTMENT OF TRANSPORTATION
ACADIA GATEWAY FACILITY
INTERMODAL AND WELCOME CENTER

GRASSED UNDERDRAINED SOIL FILTER PLAN AND DETAILS

SHEET NUMBER

C405

U:\1826.05_AECOM_Acadia Gateway Center_2021 Construction Documents\Z – CAD\DWG\1826-05-GRADE.dwg Oct 31, 2022 – 10:12am

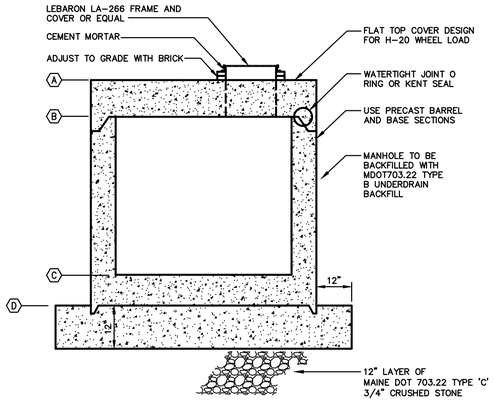

SECTION A–A
OUTLET CONTROL STRUCTURE 2 (OCS2)
SEE SCHEDULE A
NOT TO SCALE

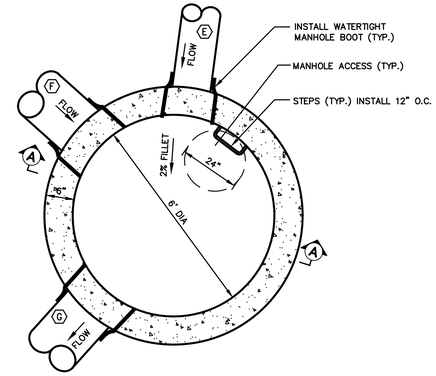

PLAN VIEW
6' OUTLET CONTROL STRUCTURE 2 (OCS2)
SEE SCHEDULE A
NOT TO SCALE

SCHEDULE A

	ITEM DESCRIPTION	ELEVATION OCS 2
A	TOP OF STRUCTURE	74.50
B	UNDERSIDE TOP SLAB	73.83
C	MANHOLE INVERT	68.60
D	BOTTOM OF STRUCTURE	67.60
E	PIPE DIAMETER	6"
	INVERT IN	68.80
F	PIPE DIAMETER	24"
	INVERT IN	71.00
G	PIPE DIAMETER	24"
	INVERT OUT	68.60

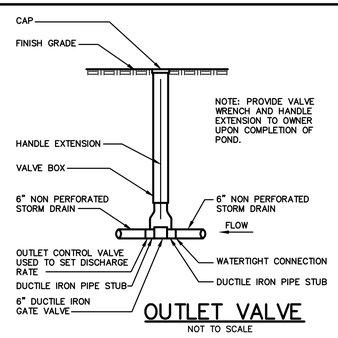

OUTLET VALVE
NOT TO SCALE

BERM STONE SIZE

SIEVE DESIGNATION (US CUSTOMARY)	PERCENT BY WEIGHT PASSING
12 IN	100
6 IN	84–100
3 IN	68–83
1 IN	42–55
NO. 4	8–12

LEVEL LIP SPREADER		
LEVEL LIP	ELEVATION	LENGTH
1	55.0	25'

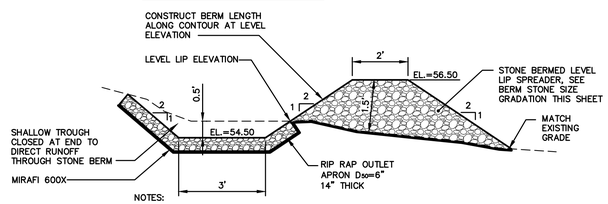

NOTES:

1. PRIOR TO CONSTRUCTION OF ANY ONSITE DRAINAGE FEATURES, THE CONTRACTOR SHALL STAKE OUT THE LEVEL LIP SPREADERS FOR REVIEW BY GORRILL–PALMER. THE CONTRACTOR SHALL NOTIFY GORRILL–PALMER WHEN STAKE OUT IS COMPLETE, AND PROVIDE GROUND SURVEYED ELEVATIONS OF THE LEVEL LIP SPREADER LOCATION. GORRILL–PALMER WILL CONDUCT A SITE WALK WITHIN 48 HOURS TO CONFIRM LOCATION AND ORIENTATION TO VERIFY DESIGN INTENT.

STONE BERM LEVEL LIP SPREADER
NOT TO SCALE

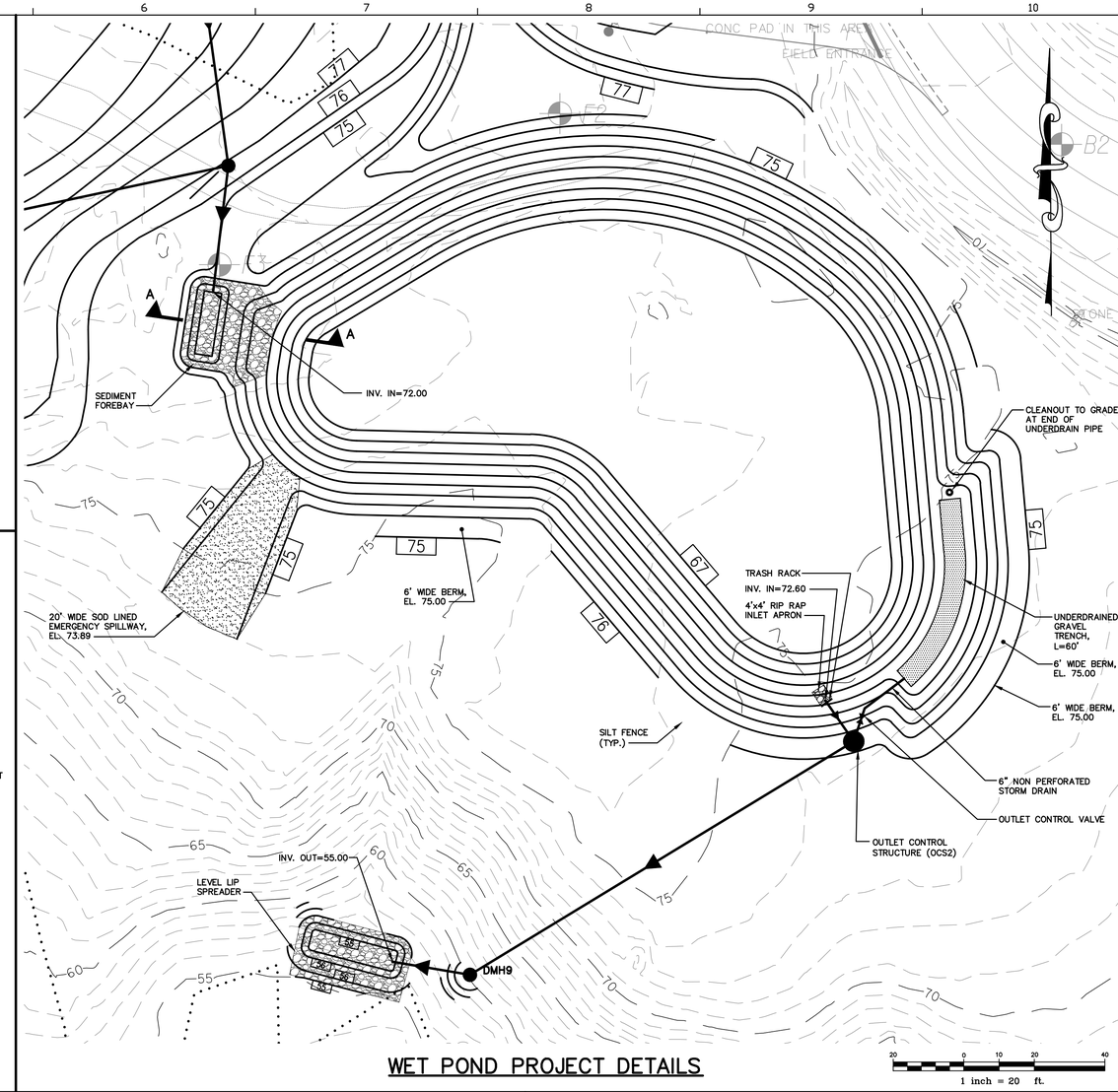

WET POND PROJECT DETAILS

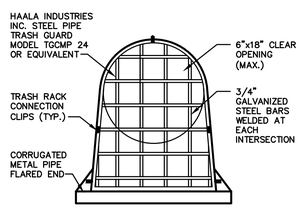

FRONT VIEW

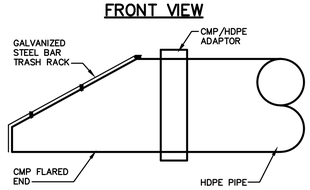

SIDE VIEW
TRASH RACK
NOT TO SCALE

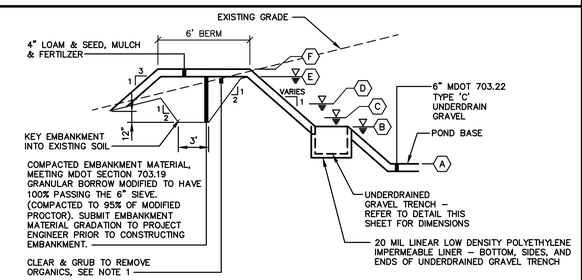

NOTES:

1. EMBANKMENT FOOTPRINT SHALL BE CLEARED OF TRASH/DEBRIS AND ANY ROCKS GREATER THAN 6", BE FREE OF ANY STANDING WATER, BE GRADED TO BE NO STEEPER THAN 1H:1V, BE SCARIFIED PRIOR TO EMBANKMENT FILL PLACEMENT, AND BE INSPECTED AND APPROVED BY THE PROJECT ENGINEER BEFORE FILL PLACEMENT BEGINS.

SCHEDULE B EMBANKMENT SCHEDULE	
ITEM DESCRIPTION	DIMENSION/ELEVATION
(A) POND BASE ELEVATION	67.00
(B) PERMANENT POOL ELEVATION	71.56
(C) PEAK ELEVATION – CHANNEL PROTECTION VOLUME	72.54
(D) PEAK ELEVATION – 2 YEAR STORM	72.88
(E) PEAK ELEVATION – 25 YEAR STORM	73.77
(F) TOP OF BERM	75.00

TYPICAL WET POND CROSS SECTION
NOT TO SCALE

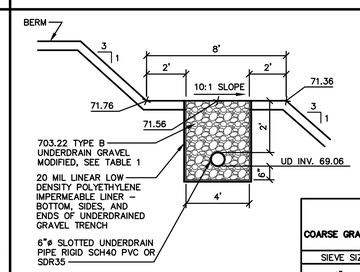

TABLE 1 (MDOT 703.22 TYPE B UNDERDRAIN GRAVEL MODIFED)	
COARSE GRAVEL	
SIEVE SIZE	% PASSING BY WEIGHT
1"	90–100
1/2"	75–100
#4	50–100
#20	15–80
#50	10–15
#200	0–5

UNDERDRAINED GRAVEL TRENCH
NOT TO SCALE

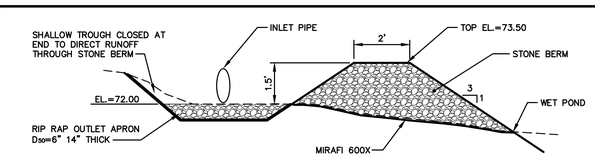

SEDIMENT FOREBAY SECTION A–A
NOT TO SCALE

BERM STONE SIZE

SIEVE DESIGNATION (US CUSTOMARY)	PERCENT BY WEIGHT PASSING
12 IN	100
6 IN	84–100
3 IN	68–83
1 IN	42–55
NO. 4	8–12

PROJECT KEY PLAN

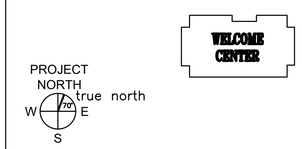

GORRILL PALMER

Relationships. Responsiveness. Results.
www.gorrillpalmer.com
207.772.2515

AECOM
1 FEDERAL STREET, 8TH FLOOR
BOSTON, MA 02110
617.723.1700
www.aecom.com

STATE OF MAINE
DEPARTMENT OF TRANSPORTATION

	DATE

FED PIN NO: NA
WIN NO: 017163.02 & 017163.03

STATE OF MAINE DOUGLAS R. REYNOLDS 10/31/22 LICENSED PROFESSIONAL ENGINEER

INFORMATION		
PROJECT		
PROGRAM	–	
PROJECT MANAGER	–	SIGNATURE
DESIGNER	AECOM	ENG. LIN. NUMBER 6251
CONSULTANT	–	
PROJECT RESIDENT	–	DATE JANUARY 17, 2022
CONTRACTOR	–	
PROJECT COMPLETION DATE	–	

MAINE DEPARTMENT OF TRANSPORTATION
ACADIA GATEWAY FACILITY
INTERMODAL AND WELCOME CENTER

WET POND PLAN AND DETAILS

SHEET NUMBER
C406

U:\1826.05_AECOM_Acadia Gateway Center_2021 Construction Documents\Z - CAD\DWG\1826-05-GRADE.dwg Oct 31, 2022 - 10:13am

NOTES:

1. CONDITION AND USEABILITY OF EXISTING CONTROLLER PAD, JUNCTION BOXES, SIGNAL FOUNDATIONS, AND SIGNAL CONDUIT SHALL BE INVESTIGATED BY THE CONTRACTOR PRIOR TO ANY ADDITIONAL WORK TO INSTALL FLASHING BEACONS. RESULTS OF THE INVESTIGATION SHALL BE REPORTED IN WRITING TO THE RESIDENT AND MAINE DOT PRIOR TO BEGINING ANY OF THE INTERSECTION WORK FOR THIS PROJECT.

2. THE BOTTOM OF THE HOUSING OF THE FLASHING BEACON FACE SHALL BE AT LEAST 16 FEET BUT NOT MORE THAN 19 FEET ABOVE THE PAVEMENT GRADE AT THE CENTER OF THE ROADWAY.

3. ALL MATERIALS AND WORK COMPLETED UNDER THIS CONTRACT SHALL CONFORM TO THE MAINEDOT STANDARD SPECIFICATIONS, SUPPLEMENTAL SPECIFICATIONS AND STANDARD DETAILS AND WITH THE FEDERAL HIGHWAY ADMINISTRATION "MANUAL ON UNIFORM TRAFFIC CONTROL DEVICES".

4. UTILITY LOCATIONS SHOWN ARE APPROXIMATE ONLY AND THE CONTRACTOR IS RESPONSIBLE FOR FINDING EXACT LOCATIONS OF UTILITIES PRIOR TO CONSTRUCTION. CONTRACTOR SHALL CONTACT DIG SAFE AT 1-888-DIG-SAFE.

5. CONTRACTOR SHALL CONTACT AND COORDINATE WITH UTILITIES UPON AWARD OF THE CONTRACT.

6. THE PROPOSED FLASHING BEACON SHALL BE INPUT BY THE CONTRACTOR UNDER OBSERVATION BY THE ENGINEER. THE CONTRACTOR SHALL PROVIDE 48 HOURS NOTICE TO THE ENGINEER.

7. THE CONTRACTOR IS RESPONSIBLE FOR ALL OPENING PERMITS AND ANY FEES ASSOCIATED WITH THEM.

8. ALL EQUIPMENT SHALL MEET OR EXCEED THE MAINEDOT SIGNAL STANDARDS.

9. LOCATION OF ALL FLASHING BEACON EQUIPMENT SHALL BE ESTABLISHED IN THE FIELD WITH THE MAINEDOT AND ENGINEER PRIOR TO INSTALLATION.

10. THE CONTRACTOR MUST MEET ALL UTILITY REQUIREMENTS FOR THE SERVICE CONNECTION.

11. ALL SPLICES WILL MEET MAINEDOT SPECIFICATIONS.

12. IT IS THE INTENT OF THIS WORK TO HAVE A COMPLETE OPERATIONAL, TESTED AND ACCEPTED FLASHING BEACON UPON COMPLETION OF THIS CONTRACT.

13. ALL NEW SIGNS SHALL MEET MUTCD SPECIFICATIONS, INCLUDING INSTALLATION.

14. ANY WORK NEAR OR IN ROUTE 3 SHALL MAINTAIN TWO-WAY TRAFFIC ON ROUTE 3 AT ALL TIMES.

15. VIDEO CAMERA AND SOFTWARE TO BE INSTALLED AND SET UP TO COLLECT ON-GOING TURNING MOVEMENT VOLUMES. PLACEMENT OF CAMERA AND INSTALLATION OF SOFTWARE SHALL MEET MANUFACTURERS REQUIREMENTS AND FINAL INSTALLATION SHALL BE REVIEWED AND APPROVED BY THE MAINEDOT.

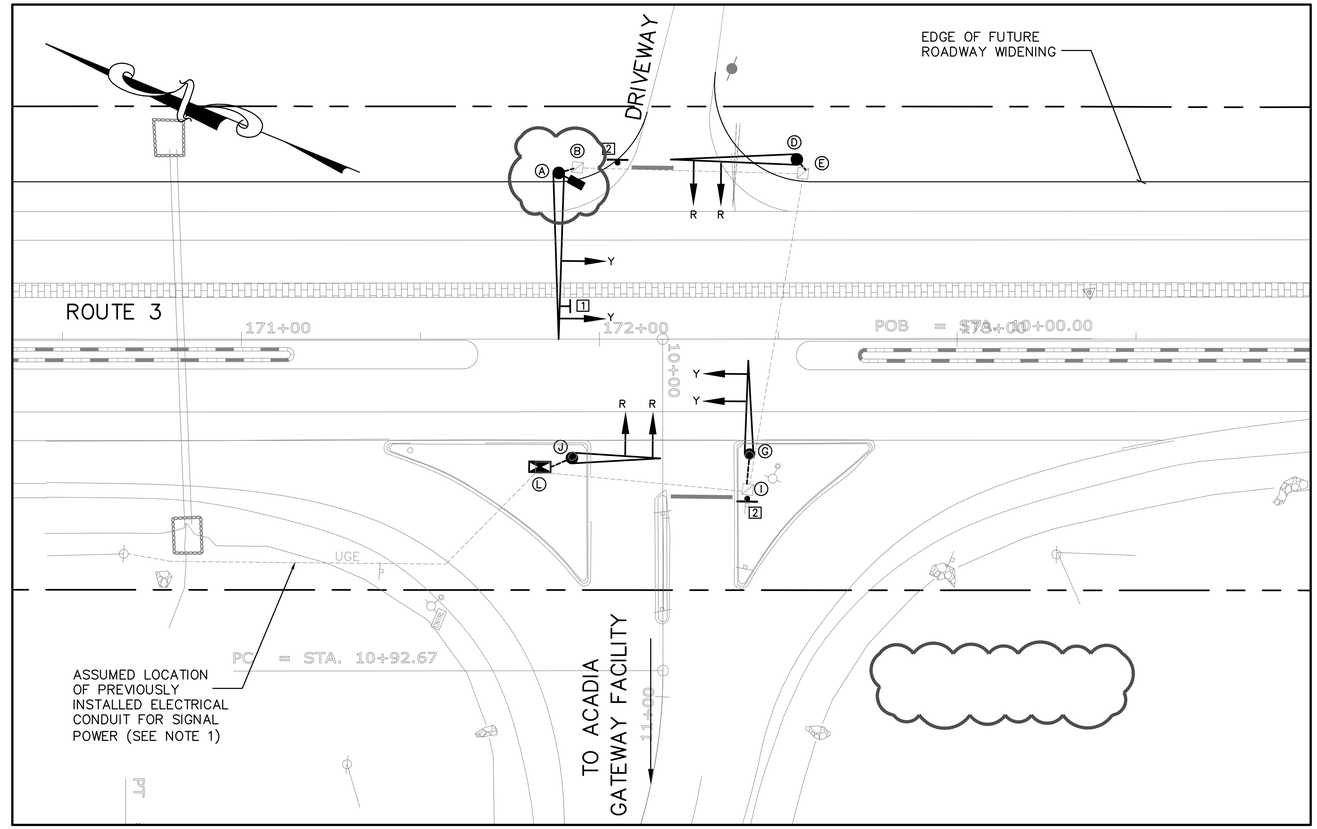

1 inch = 20 ft.

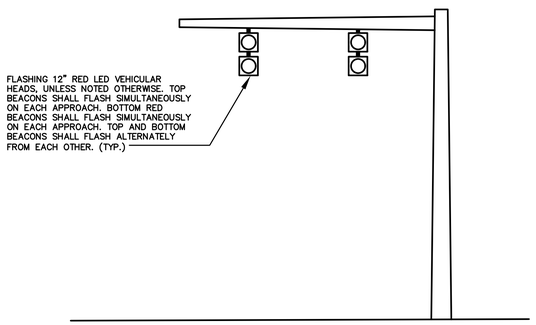

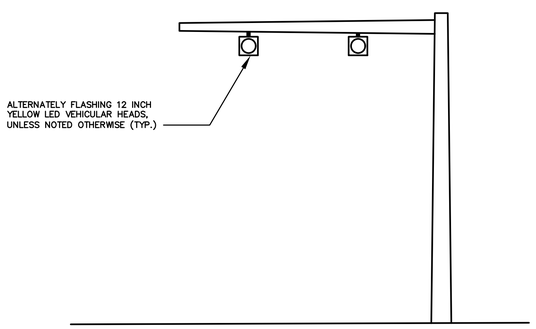

TYPICAL FLASHING BEACON INSTALLATION

(ITEM NO. 643.60)

LEGEND

- ELECTRIC METER
- MAST POLE WITH MAST ARM
- FLASHING BEACON (Y=YELLOW, R=RED)
- JUNCTION BOX
- CONDUIT (IF NEEDED)
- OVERHEAD SIGNS
- LUMINAIRE
- VIDEO CAMERA

SIGN LEGEND

LEFT TURN MUST YIELD — 24"x36" — 1 — MOUNTED ON MAST ARM

STOP — 30"x30" — 2

CONDUIT SCHEDULE

RUN	CENTER TO CENTER (LINEAR FEET)	COMMENTS
A–B	6	3" PVC
B–E	63	3" PVC
E–I	89	3" PVC
D–E	5	3" PVC
G–I	8	3" PVC
J–L	10	3" PVC
I–L	55	3" PVC

ALL PVC SHALL BE SCHEDULE 80

EQUIPMENT SCHEDULE

DESIGNATION	ITEM	DESCRIPTION
A	PROPOSED MAST POLE/ARM	NEW MAST POLE WITH 45 FOOT MAST ARM ON EXISTING 30" CONCRETE FOUNDATION. FATIGUE CATEGORY I.
B,E,I	EXISTING JUNCTION BOX	
D	PROPOSED MAST POLE/ARM	NEW MAST POLE WITH 40 FOOT MAST ARM ON EXISTING 30" CONCRETE FOUNDATION. FATIGUE CATEGORY I.
G	PROPOSED MAST POLE/ARM	NEW MAST POLE WITH 30 FOOT MAST ARM ON EXISTING 30" CONCRETE FOUNDATION. FATIGUE CATEGORY III.
J	PROPOSED MAST POLE/ARM	NEW MAST POLE WITH 30 FOOT MAST ARM ON EXISTING 30" CONCRETE FOUNDATION. FATIGUE CATEGORY III.
L	PROPOSED ELECTRIC METER	NEW ELECTRIC METER ON EXISTING CONCRETE FOUNDATION

PROJECT KEY PLAN

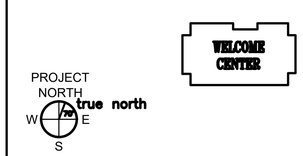

GORRILL PALMER
Relationships. Responsiveness. Results.
www.gorrillpalmer.com
207.772.2515

AECOM
1 FEDERAL STREET, 8TH FLOOR
BOSTON, MA 02110
617.723.1700
www.aecom.com

STATE OF MAINE
DEPARTMENT OF TRANSPORTATION

	DATE

FED PIN NO: NA
WIN NO: 017163.02 & 017163.03

STATE OF MAINE — DOUGLAS R. REYNOLDS — 10/31/22 — LICENSED — PROFESSIONAL ENGINEER

INFORMATION		DATE
SIGNATURE		
ENG. LIN. NUMBER	6251	
DATE	JANUARY 17, 2022	

PROJECT	INFO	DATE
PROGRAM	–	–
PROJECT MANAGER	–	–
DESIGNER	AECOM	
CONSULTANT	–	–
PROJECT RESIDENT	–	–
CONTRACTOR	–	–
PROJECT COMPLETION DATE	–	–

MAINE DEPARTMENT OF TRANSPORTATION
ACADIA GATEWAY FACILITY
INTERMODAL AND WELCOME CENTER

ROUTE 3 FLASHING BEACON PLAN

SHEET NUMBER
C501

U:\1826.05_AECOM_Acadia Gateway Center_2021 Construction Documents\Z - CAD\DWG\1826-01-ROUTE3-IMPROVEMENTS.dwg Oct 31, 2022 - 10:13am

SYMBOLS

	COMPOUND PRESSURE GAUGE		PRESSURE RELIEF VALVE
	PRESSURE GAUGE 0-100 PSI		MOTORIZED BALL VALVE
	PRESSURE SUSTAINING VALVE		ISOLATION VALVE
	TEMPERATURE GAUGE		CHECK VALVE
TE	TEMPERATURE SENSOR	DP	DIFFERENTIAL PRESSURE TRANSDUCER
PS	PRESSURE SWITCH SET TO 85 PSI		CIRCUIT SETTER
	PETE'S TEST PORT		CONCENTRIC REDUCER
	PUMP		PUMP CONTROLLER
	3 WAY VALVE		CIRCUIT SETTER
	EXPANSION TANK		STRAINER
F	FLOW METER		FLUSH/PURGE TANK

HATCHES

CONCRETE / FACILITY, FINISHED GRADE, BEDROCK, OVERBURDEN, FOAM

SHEET INDEX

SHEET NUMBER	SHEET DESCRIPTION
G-001	GEOTHERMAL EARTH COUPLING
G-002	DETAILS
G-003	GSHX SITE LAYOUT
G-004	GEOTHERMAL TESTING METHODS

GENERAL NOTES

DESIGN BASIS:

1. HEATING/COOLING PEAK LOADS PER ALLIED ENG 10/20/21, AND ANNUAL ENERGY BASIS PER THORNTON TOMASETTI 11/05/21
   - -HEATING PEAK LOAD 682 MBH
   - -NO DOMESTIC HOT WATER
   - -ANNUAL HEATING COIL LOAD 278.8 MMBTU
   - -COOLING PEAK LOAD 661.4MBH
   - -ANNUAL COOLING COIL LOAD 215.2.0 MMBTU
2. THE SYSTEM IS BASED ON TWO (2) MULTISTACK MS010X AND TWO(2) MS 020X HEAT PUMP MODULES, OPTIMIZED FOR 172GPM PEAK FLOW.
3. EARTH COUPLING SIZING IS BASED ON 430FT INSTALLED UBEND LENGTH. THE ESTIMATED AVERAGE THERMAL PROPERTY BASIS USED ARE THERMAL CONDUCTIVITY =1.5 BTU/HR-FT-F, AND THERMAL DIFFUSIVITY = 1.0 FT^2/DAY, WITH 50F MEAN EARTH TEMPERATURE. HIGH CONDUCTIVITY GROUT OF 1.4 BTU/HR-FT-F MINIMUM IS REQUIRED.
4. FROM THE ABOVE LOAD AND ENERGY BASIS, ALONG WITH DESIGN DETAILS HEREIN, THE ENTERING WATER TEMPERATURE FROM THE GEOTHERMAL SYSTEM DESIGN LIMITS ARE 32F MINIMUM, 85F MAXIMUM.
5. SEE SPECIFICATION 237000 FOR DETAILS ON INSTALLATION AND STARTUP OF GEOTHERMAL BOREFIELD AND SYSTEM.

GENERAL NOTES:

1. TWENTY (20) VERTICAL LOOPS AT 430' DEPTH PLANNED TO CONSIST OF 1¼" DIA SDR-11 HDPE U-BEND PIPES.TRENCHING, SAND BEDDING, BACKFILL, AND VAULT INSTALLATION BY GEOTHERMAL CONTRACTOR. ALL OSHA, STATE AND LOCAL SAFETY REGULATIONS MUST BE MET.
2. GEOTHERMAL CONTRACTOR TO TEST, BACK FILL AND CHARGE LOOP WITH 25% SOLUTION BY VOLUME OF PROPYLENE GLYCOL ANTIFREEZE PER SPECIFICATIONS.
3. ALL NON-MANIFOLD PIPING SHALL BE SIZED TO NOT EXCEED 5.0 FPS AT PEAK FLOW.
4. TOTAL DYNAMIC HEAD OF GEOTHERMAL CIRCULATOR PUMP TO BE FINALIZED AFTER BORES AND MANIFOLD HAVE BEEN FINALIZED TO PREVENT UNDER OR OVERSIZING.
5. ALL HORIZONTAL UNDERGROUND PIPING TO BE HDPE PER SPECIFICATION & MIN 4' DEPTH.
6. ALL UNDERGROUND CONNECTIONS TO BE HEAT FUSED BY AN IGSHPA CERTIFIED INSTALLER.
7. ALL VERTICAL LOOPS MUST BE ±10% IN LENGTH OF ONE ANOTHER & BALANCED TO PROVIDE CONSISTENT FLOWS AND HEAT TRANSFER.
8. THE CONTENT WITHIN THIS SHEET IS A SCHEMATIC VIEW FOR ILLUSTRATIVE PURPOSES ONLY. PIPING DETAILS NOT SHOWN.
9. ALL BOREHOLE PARAMETERS SHOWN ARE TYPICAL & SUBJECT TO CHANGE AFTER BORES ARE DRILLED TESTED
10. INSTALLED U-BENDS IN BORES SHALL BE GROUTED PER SPECIFICATIONS
11. ALL BOREHOLES SHALL BE IN PARALLEL CONFIGURATION WITH UNIFORM DEPTHS.
12. PRIOR TO ADDING ANTIFREEZE, WATER IN GSHX MUST MEET THE MINIMUM WATER QUALITY STANDARDS OF THE ANTIFREEZE AND HEAT PUMP MANUFACTURERS. IN-PLACE CONDITIONING OF THE GSHX WATER MAY BE NECESSARY.
13. SYSTEM SHALL BE PRE-CHARGED TO 50PSI FOR WINTER INSTALLATION, 30PSI FOR SUMMER INSTALLATION.
14. INSULATE ANY WATER BEARING CONDUITS WITHIN 5FT OF GEOTHERMAL HDPE PIPING PER 3.1 OF SPECIFICATION 48 16 00.
15. GEOTHERMAL CONTRACTOR SHALL INSTALL MAIN SUPPLY/RETURN HDPE PIPES FROM VAULT INTO BUILDING, AND INSTALL HDPE VALVING INSIDE MECHANICAL ROOM AS SHOWN. HDPE SHALL BE ROUTED THROUGH THE FOUNDATION VIA PRECAST FEEDTHROUGHS. FOUNDATION PENETRATIONS SHALL BE SEALED WITH LINKSEAL, OR OTHER APPROVED METHOD. COORDINATE MAIN SUPPLY/RETURN PIPES INTERFACE TO IN-BUILDING PIPING WITH MECHANICAL CONTRACTOR.

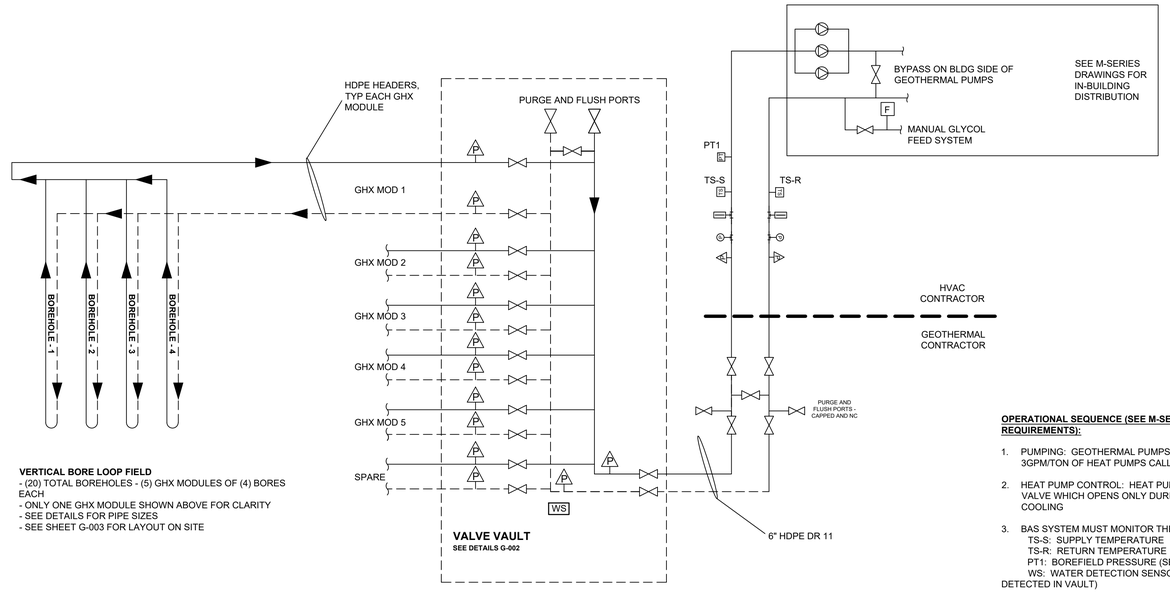

VERTICAL BORE LOOP FIELD
- (20) TOTAL BOREHOLES - (5) GHX MODULES OF (4) BORES EACH
- ONLY ONE GHX MODULE SHOWN ABOVE FOR CLARITY
- SEE DETAILS FOR PIPE SIZES
- SEE SHEET G-003 FOR LAYOUT ON SITE

GEOTHERMAL EARTH COUPLING SYSTEM SCHEMATIC
NTS

OPERATIONAL SEQUENCE (SEE M-SERIES DWGS FOR FURTHER REQUIREMENTS):

1. PUMPING: GEOTHERMAL PUMPS TO PROVIDE NOMINAL 3GPM/TON OF HEAT PUMPS CALLED TO HEAT OR COOL
2. HEAT PUMP CONTROL: HEAT PUMPS MUST HAVE CONTROL VALVE WHICH OPENS ONLY DURING CALL FOR HEATING OR COOLING
3. BAS SYSTEM MUST MONITOR THE FOLLOWING:
   - TS-S: SUPPLY TEMPERATURE
   - TS-R: RETURN TEMPERATURE
   - PT1: BOREFIELD PRESSURE (SET ALARM IF BELOW 15PSI)
   - WS: WATER DETECTION SENSOR (SET ALARM IF WATER DETECTED IN VAULT)

THE ABOVE MONITORED DATA MUST BE LOGGED AND ACCESSIBLE FOR A MINIMUM OF 1 YEAR FOR TROUBLESHOOTING PURPOSES.

TYPICAL REVERSE-RETURN GHX MODULE

SUPPLY SEGMENT[1]	PIPE	NOM SIZE (IN)	PEAK DESIGN FLOW (GPM)	PEAK PRESS. DROP (FT WC)[2]	MINIMUM PURGING FLOW (GPM)	PURGING PRESS. DROP (FT WC)[3]	PURGING VELOCITY (FT/S)
Bldg-Vault	HDPE DR-11	6	172.0	3.3	180.0	2.7	2.5
Vault-a	HDPE DR-11	2	34.4	6.8	35.7	4.8	3.9
a-b	HDPE DR-11	2	25.8	0.6	26.8	0.5	2.9
b-c	HDPE DR-11	1.5	17.2	0.9	17.9	0.7	3.0
c-d	HDPE DR-11	1.25	8.6	0.5	8.9	0.4	2.0
U-bend	HDPE DR-11	1.25	8.6	20.1	8.9	15.5	2.0
Entire System[4]	-	-	172.0	32.7	250.0	24.9	-

[1] RETURN PATH IS MIRROR OF SUPPLY PATH, AND NOTED WITH ' (I.E. a'-b' IS A RETURN SEGMENT AND SAME AS SUPPLY SEGMENT a-b)
[2] DESIGN PRESSURE DROP AT PEAK HEATING DESIGN FLOW WITH 25% PROPYLENE GLYCOL BY WEIGHT AT 32F FOR HIGHEST PD GHX MODULE
[3] PURGE PRESSURE DROP AT MIN PURGE FLOW, WITH WATER AT 50F, TO PROVIDE MINIMUM OF 2 FT/SEC FLOW IN ENTIRE CIRCUIT FOR HIGHEST PD GHX MODULE.
[4] INCLUDES MAIN SUPPLY AND RETURN PIPING FROM ISOLATION VALVES IN BUILDING THROUGH VAULT AND HIGHER PD GHX MODULE

GHX SYSTEM DESIGN INFORMATION

ITEM	PEAK FLOW (GPM)	PEAK PRESS. DROP (FT WC)[1]	PURGING PRESS. DROP (FT WC)[2]
GHX MOD 1	34.4	29.0	20.3
GHX MOD 2	34.4	29.0	20.3
GHX MOD 3	34.4	28.2	19.7
GHX MOD 4	34.4	29.0	20.3
GHX MOD 5	34.4	29.0	20.3

[3] DESIGN PRESSURE DROP AT PEAK SYSTEM FLOW WITH 25% PROPYLENE GLYCOL BY WEIGHT AT 32F
[2] PURGING PRESSURE DROP AT MINIMUM PURGING FLOW WITH WATER AT 50F

HDPE PIPING AND VOLUME ESTIMATES

	APPROXIMATE LENGTHS OF PIPE (FT)				
GHX MODULE #	1-1/4" HDPE SDR11	1.5" HDPE SDR11	2" HDPE SDR11	6" HDPE SDR11	ESTIMATED VOLUME (GAL)
1	3540	40	150	0	294
2	3540	40	150	0	294
3	3540	40	150	0	294
4	3520	40	140	0	291
5	3540	40	150	0	294
Main SR	0	0	0	400	558
Total	**17680**	**200**	**740**	**400**	**2023**

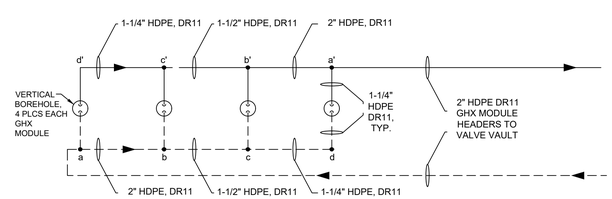

TYP. VERTICAL BORE GHX MODULE, 1 OF 5 SHOWN
NTS

PROJECT KEY PLAN

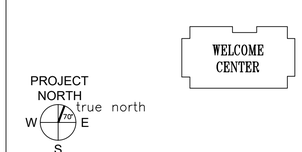

AECOM
1 FEDERAL STREET, 8TH FLOOR
BOSTON, MA 02110
617.723.1700
www.aecom.com

STATE OF MAINE
DEPARTMENT OF TRANSPORTATION

DATE

FED PIN NO: NA

WIN NO: 017163.02 & 017163.03

STATE OF MAINE — TIMOTHY M. ROOS — No. 12478 — PROFESSIONAL ENGINEER

SIGNATURE

ENG. LIC. NUMBER 12478

DATE JANUARY 17, 2022

PROJECT INFORMATION

PROGRAM	–
PROJECT MANAGER	–
DESIGNER	AECOM
CONSULTANT	–
PROJECT RESIDENT	–
CONTRACTOR	–
PROJECT COMPLETION DATE	–

MAINE DEPARTMENT OF TRANSPORTATION
ACADIA GATEWAY FACILITY
INTERMODAL AND WELCOME CENTER

GEOTHERMAL
EARTH COUPLING

SHEET NUMBER

G-001

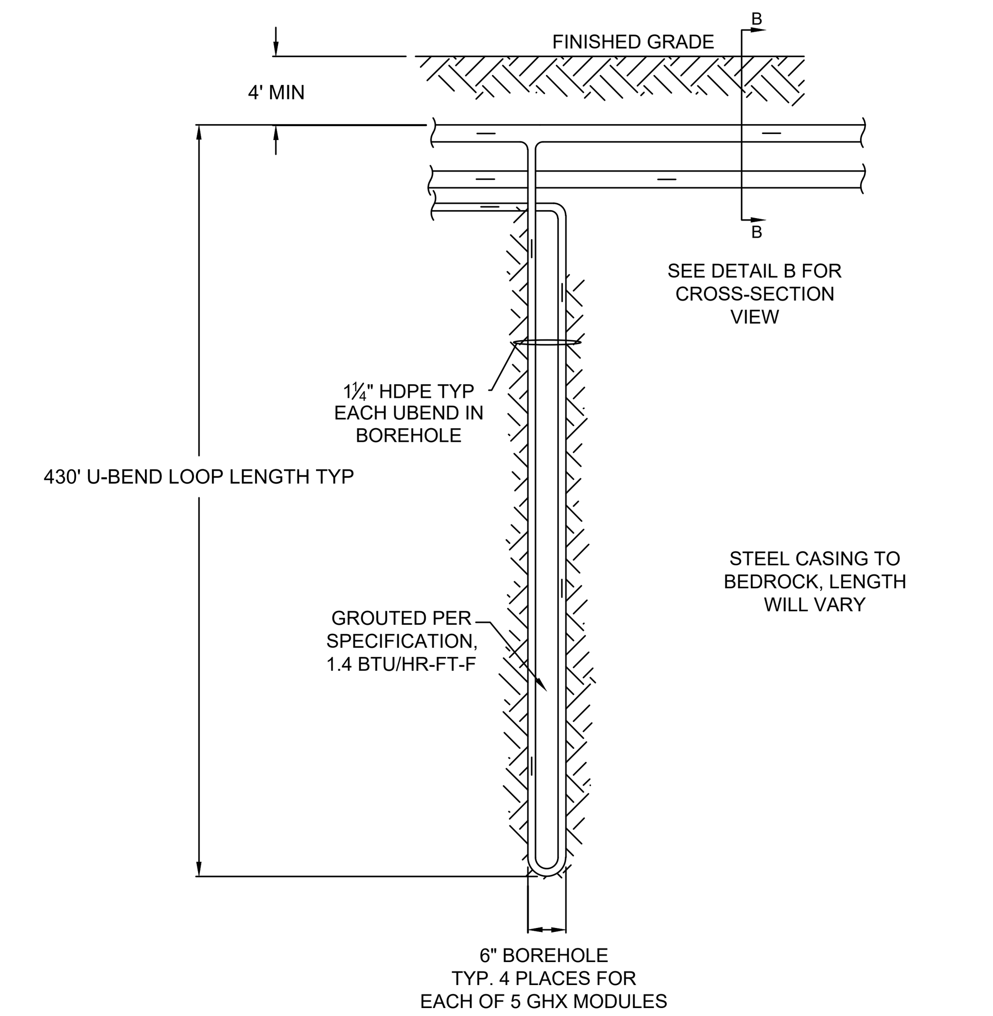

DETAIL		SCALE
A	**VERTICAL BORE DETAIL**	N.T.S.

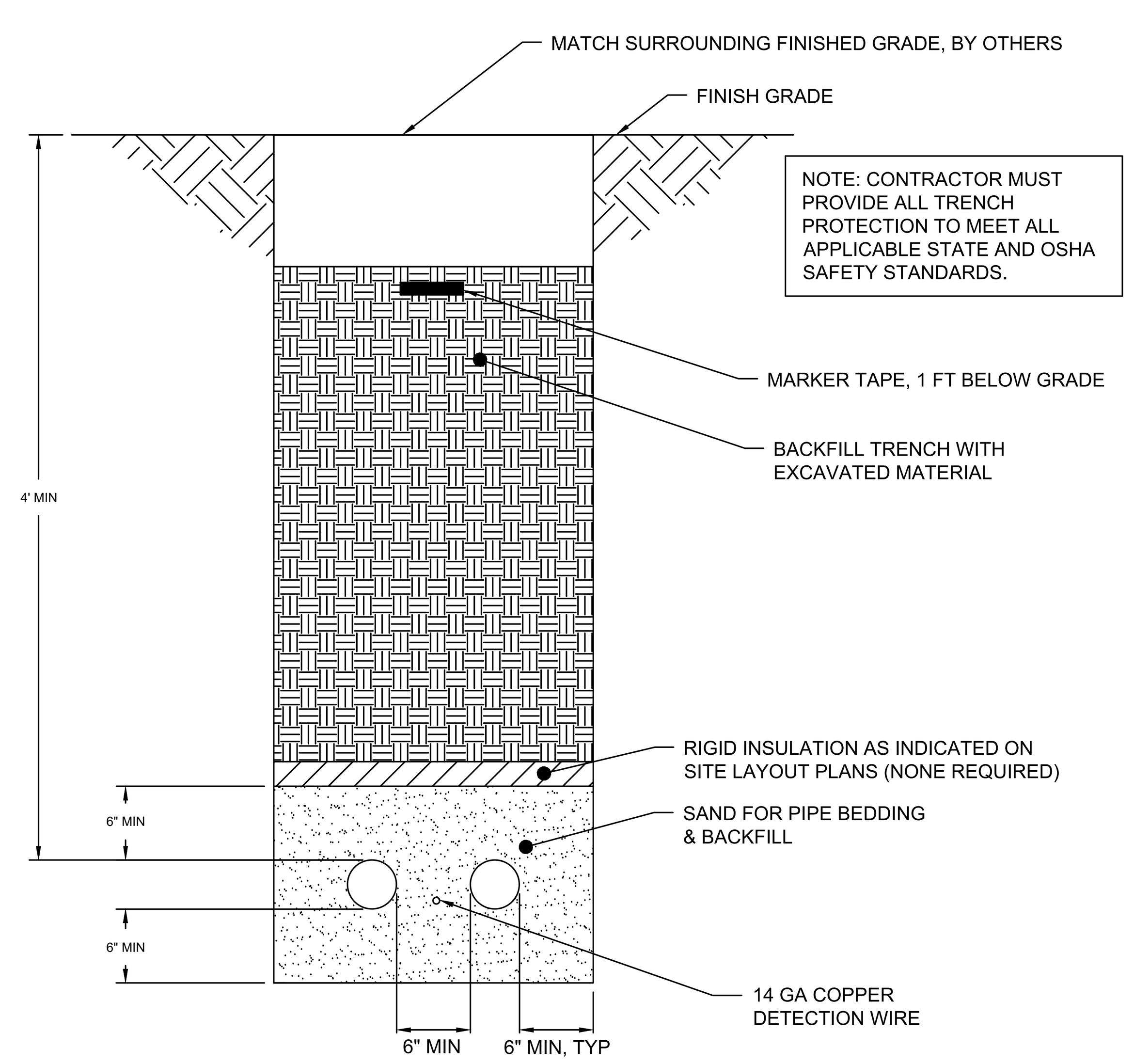

DETAIL		SCALE
B	TRENCH FOR SINGLE SUPPLY/RETURN PIPE PAIR UP TO 4" DIAMETER	N.T.S.

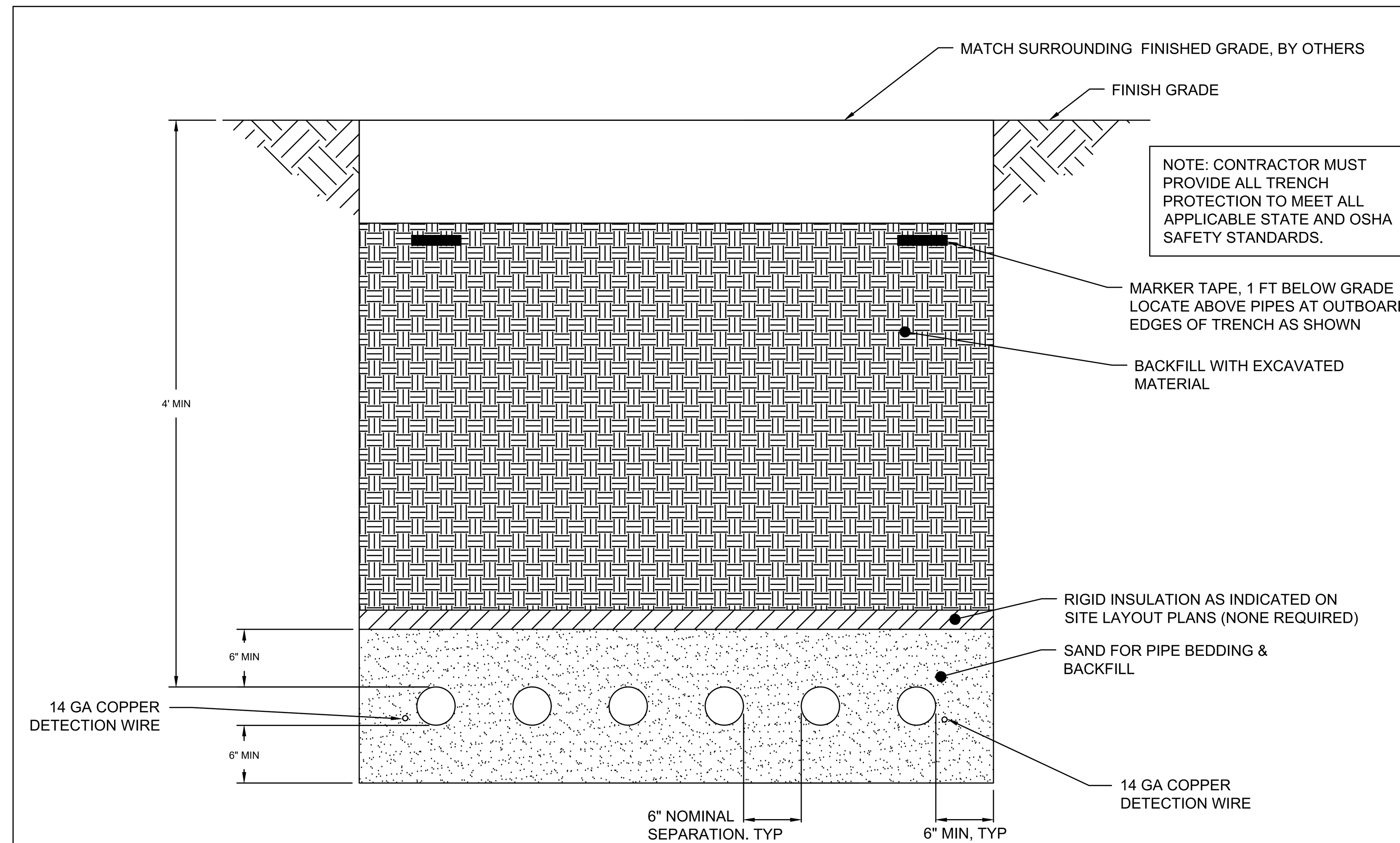

DETAIL		SCALE
C	COMMON TRENCH FOR MULTIPLE SUPPLY RETURN PIPE PAIRS UP TO 4" DIAMETER	N.T.S.

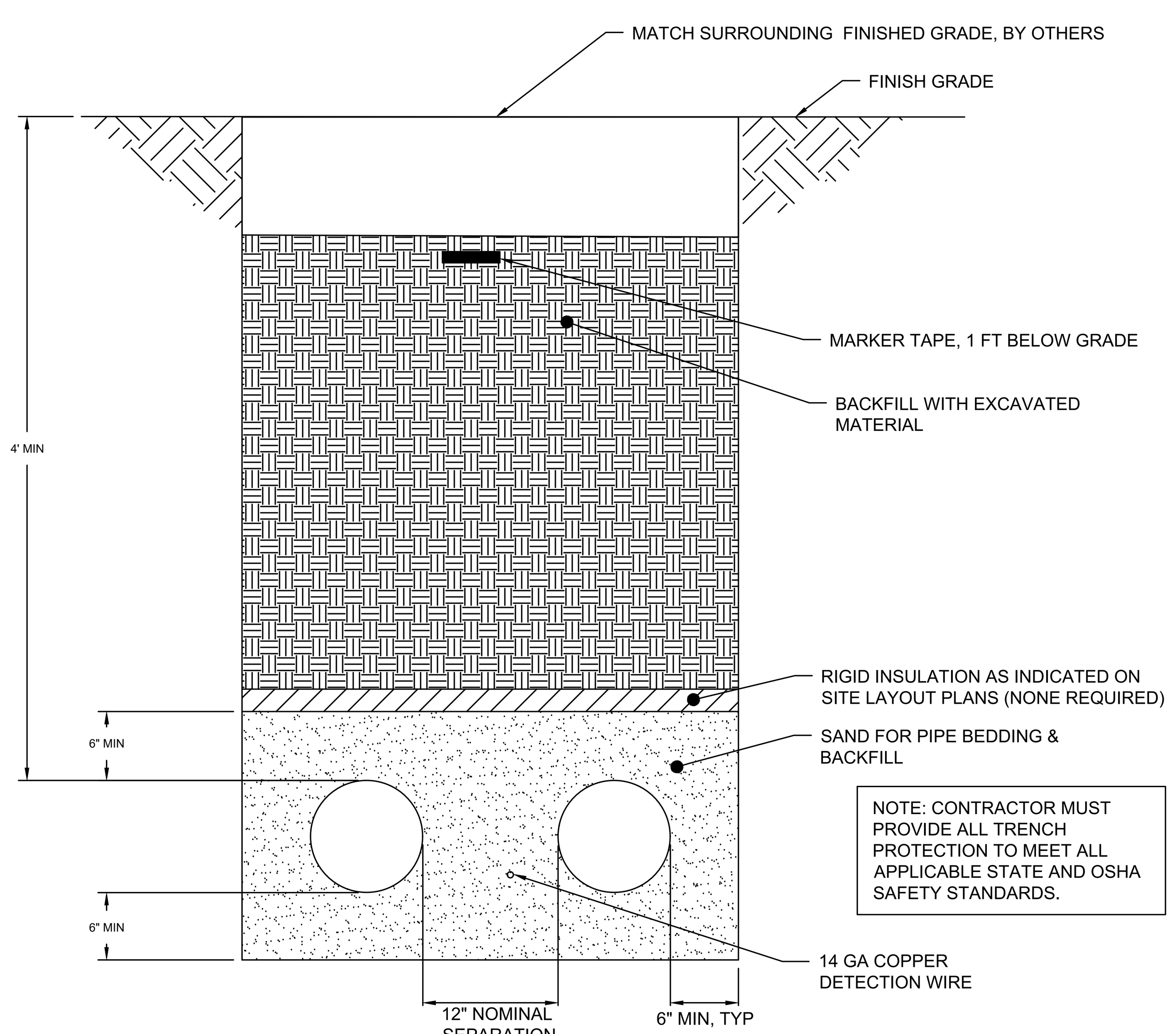

DETAIL		SCALE
D	TRENCH FOR SINGLE SUPPLY/RETURN PIPE PAIR GREATER THAN 4" DIAMETER	N.T.S.

CIRCUIT MAKER VAULT®
6" MAIN w(6) 2" CIRCUITS

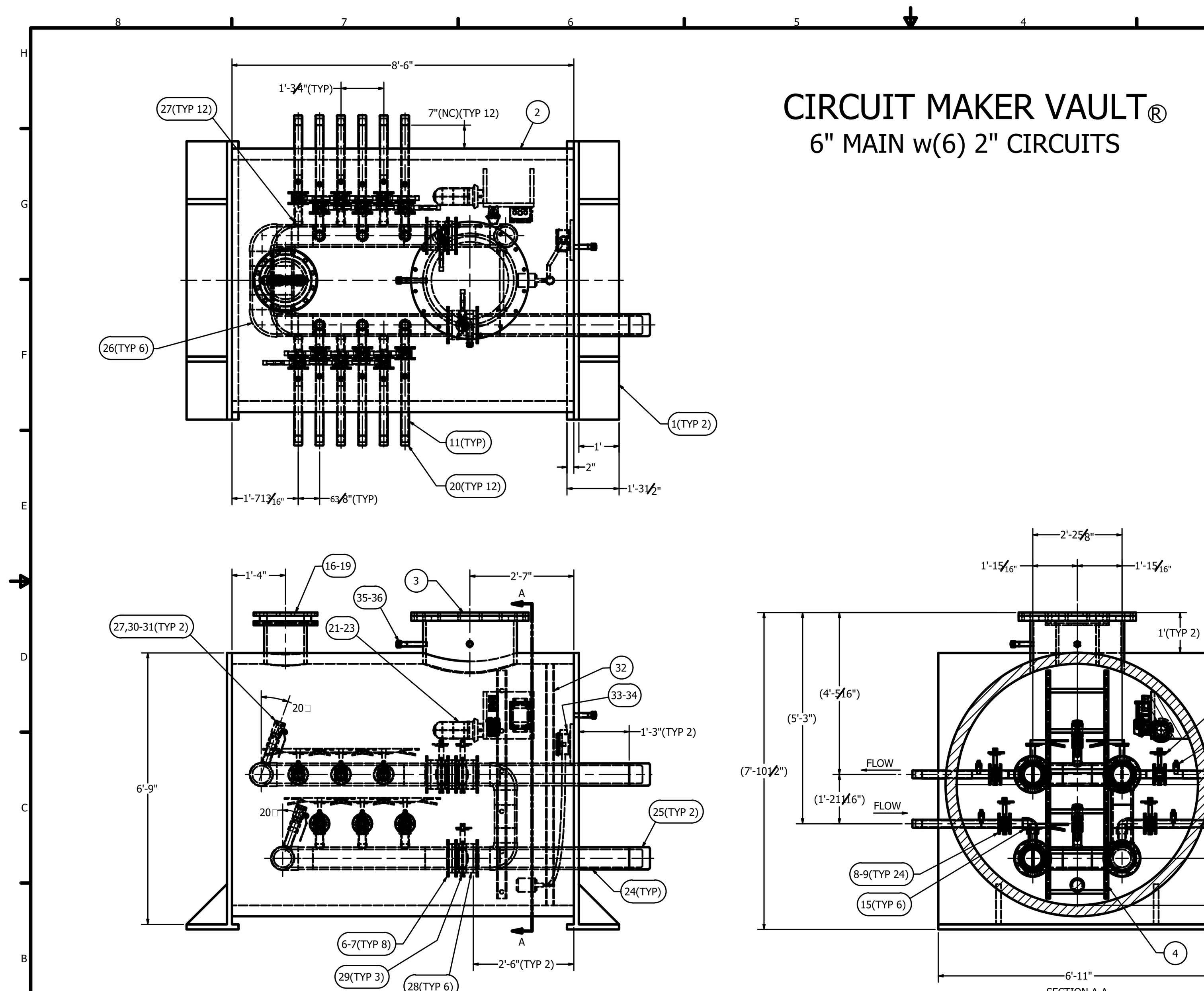

PARTS LIST			
ITEM	QTY	PART NUMBER	DESCRIPTION
1	2	29010010	1-1/2" HDPE END PLATE
2	8.5 ft	20722353	72" RSC 250 HDPE PROFILE WALL PIPE
3	1	53280024	28" HDPE MANWAY KIT (INCLUDES COVER SET, PIPE, TRANSITION, & CAP)
4	1	98000180	FIBERGLASS MANHOLE LADDER
5	2	98000207	LADDER INSTALLATION KIT
6	8	50061122	6" DR 11 IPS FLANGE ADAPTER HDPE
7	8	53060031	6" DR 11 IPS BACKUP RING DUCTILE IRON
8	24	50021115	2" DR 11 IPS FLANGE ADAPTER HDPE
9	24	53020022	2" DR 11 IPS BACKUP RING DUCTILE IRON
10	12	59020008	2" NIBCO CAST IRON WAFER BFV, LEVER OP
11	16.5 ft	10021116	2" DR 11 IPS HDPE PIPE
12	12	52000019	1/2" BRASS FPT x 3/4" HDPE SOCKET TRANSITION
13	12	52000010	1/2" BRASS PT PORT
14	2 ft	10001119	3/4" DR 11 IPS HDPE PIPE
15	6	52020011	2" DR 11 IPS 90 DEG ELBOW SOCKET HDPE
16	1	50121711	12" DR 17 IPS FLANGE ADAPTER HDPE
17	1	53120030	12" DR 11 IPS BACKUP RING DUCTILE IRON
18	1	49120011	12" IPS BLIND FLANGE 1" THICK HDPE
19	0.5 ft	10121714	12" DR 17 IPS HDPE PIPE
20	12	50021118	2" DR 11 IPS CAP MOLDED HDPE
21	1	53000036	GEO ELECTRICAL KIT (INCLUDES ENCLOSURE w/COVER, GANG BOX, WEATHERPROOF COVER, RECEPTACLE, TRANSITION, & CAP)
22	1	53000147	GEO LIGHT KIT (INCLUDES FIXTURE, GANG BOX, SWITCH, & COVER)
23	1	29010012	BIRDHOUSE FROM 1" HDPE SHEET (ELECTRIC MOUNT)
24	20.5 ft	10061122	6" DR 11 IPS HDPE PIPE
25	2	50061125	6" DR 11 IPS CAP MOLDED HDPE (FOR TESTING AND SHIPPING)
26	6	50061124	6" DR 11 IPS 90 DEG ELBOW MOLDED HDPE
27	14	50061129	6" x 2" DR 11 IPS BRANCH SADDLE ROUND BASE HDPE
28	6	49061112	6" VALVE SPACER 2" THICK FABBED HDPE
29	3	59060055	6" NIBCO CAST IRON WAFER BFV, LEVER OP
30	2	59020030	2" FULL PORT BRASS BALL VALVE
31	2	52020013	2" DR 11 IPS MPT BRASS x SOCKET TRANS FITTING
32	6 ft	10021116	2" DR 11 IPS HDPE PIPE (FOR MOUNTING FLOAT SWITCH)
33	1	98000308	SJE RHOMBUS LIQUID LEVEL ALARM w/FLOAT SWITCH
34	1	29010012	MOUNTING PLATE FOR LIQUID LEVEL ALARM FROM 1" HDPE SHEET
35	1	53011119	1" DR 11 IPS HDPE x MPT TRANS FIT 304 SS
36	1	98010123	1" PP FPT THREADED CAP
37	1	53120046	12" NEOPRENE GASKET
38	1	53120038	12" STANDARD BOLTPACK
39	12	53020097	2" BFV BOLTPACK
40	3	53061011	6" BFV BOLTPACK
41	7	53061016	6" NEOPRENE GASKET
42	1	53061012	6" STANDARD BOLTPACK

NOTES:
-LOCATION OF 2" PIPE FOR MOUNTING FLOAT SWITCH TO BE DONE AT FABRICATOR DISCRETION.

-FLOAT SWITCH TO BE PLACED APPROXIMATELY 1' ABOVE BOTTOM OF VAULT. CUSTOMER TO ADJUST TO FINAL DESIRED ELEVATION OF FLOAT SWITCH ON-SITE.

THIS DRAWING IS INTELLECTUAL PROPERTY OF ISCO INDUSTRIES, INC. ("ISCO"). IT IS INTENDED FOR THE IDENTIFICATION OF THE GOOD(S) DEPICTED AND SHALL NOT BE CIRCULATED OR REPRODUCED WITHOUT PERMISSION FROM AN AUTHORIZED AGENT OF ISCO. THE USE OF THIS DRAWING IS NOT INTENDED TO REPLACE THE EVALUATION, JUDGMENT AND/OR OPINION OF A LICENSED PROFESSIONAL AND THE USER OF THIS DRAWING EXPRESSLY ASSUMES AND RELEASES ISCO FROM ALL RISK AND LIABILITY ASSOCIATED THEREWITH. THE GOODS DEPICTED IN THIS DRAWING ARE SUBJECT TO ISCO'S STANDARD TERMS AND CONDITIONS OF SALE SET FORTH AT WWW.ISCO-PIPE.COM/TERMS-AND-CONDITIONS.ASPX.

TOLERANCE STANDARDS AS MEASURED AT AMBIENT TEMPERATURE:
-ISCO SHALL MAINTAIN A FABRICATION TOLERANCE OF ± 1/2" FOR ALL DIMENSIONS SHOWN.
-ISCO SHALL MAINTAIN A FABRICATION TOLERANCE OF ± 2° FOR ALL ANGLES SHOWN.
-(X'X") MARKS A DIMENSION THAT IS FOR REFERENCE ONLY.
-(NC) MARKS A DIMENSION THAT IS NOT CRITICAL AND REQUIRES NO NOTIFICATION OF DEVIATION BY FABRICATOR.
-SPECIFIC TOLERANCES MAY BE PROVIDED BY CUSTOMER BUT MUST BE APPROVED BY ISCO INDUSTRIES AND NOTED ON DRAWING PRIOR TO FABRICATION.
*UNLESS OTHERWISE SPECIFIED.

GENERAL NOTES:
-STRUCTURE OUTLETS NOT DESIGNED AS ANCHOR POINTS FOR CONNECTED PIPING.

REVISION HISTORY			
REV	DESCRIPTION	DATE	BY

TESTING
REQUIRED: YES
TYPE: AIR(STRUCTURE); HYDRO(MANIFOLD)
PRESSURE: 1.5 PSI(AIR); (90 PSI)(HYDRO)
DURATION: 30 MIN(AIR); 30 MIN(HYDRO)

www.isco-pipe.com 1-800-345-4726

APPROVED BY: DATE:
WO #:
DRAWN BY: SK2 DATE: 11/22/2021
REVIEWED BY: MA DATE: 11/22/2021

CUSTOMER NAME: WELLSPRING GEO (ACADIA)
DRAWING TITLE: 72" GEO VAULT w(6) 6" x 2" CIRCUITS
SIZE: D DWG FILE LOCATION: DN/AS/SL/WELLSPRING GEO (ACADIA)-112221 SHEET 1 OF 2
TERRITORY REPRESENTATIVE: STUART LYLE

HDPE GEOTHERMAL VALVE VAULT
THIS DETAIL IS PROVIDED TO SHOW THE INTENT OF THE DESIGN. SEE PROJECT SPECIFICATIONS FOR ADDITIONAL INFORMATION. EQUAL PRODUCTS MAY BE SUBMITTED AND APPROVED.

HDPE VAULT REQUIREMENTS

1. SEE SPECIFICATION 237000 FOR DETAILED REQUIREMENTS OF HDPE VAULT, INCLUDING INSTALLATION.
2. MUST HAVE THE FOLLOWING:
   2.1. 6" MAIN SUPPLY/RETURN PIPING
   2.2. 2" GHX MODULE CIRCUIT SUPPLY/RETURN PIPING, 5 PLACES
   2.3. P/T PORTS ON ALL CIRCUITS AND MAINS
   2.4. FULL SIZED CIRCUIT SETTER ON EACH CIRCUIT
   2.5. BUTTERFLY SHUTOFF VALVES ON ALL CIRCUITS AND MAINS
   2.6. OSHA MANWAY AND LADDER
   2.7. FULL SIZE BYPASS VALVE CONNECTING SUPPLY AND RETURN HEADERS
   2.8. PURGE AND FLUSH PORTS WITH ISOLATION VALVES
   2.9. 16" TOP PORT AT OPPOSITE END FROM MANWAY
   2.10. PREWIRED LIGHTING AND 120V OUTLET
3. MUST BE INSTALLED WITH ANTI-BOUYANCY MEASURES PER THE MANUFACTURER
4. MUST BE INSTALLED WITH RECOMMENDED BACKFILL PER THE MANUFACTURER
5. WATER DETECTION SENSOR SHALL BE INSTALLED BY VAULT MANUFACTURER AND CONNECTED TO BUILDING BAS

PROJECT KEY PLAN

AECOM
1 FEDERAL STREET, 8TH FLOOR
BOSTON, MA 02110
617.723.1700
www.aecom.com

STATE OF MAINE
DEPARTMENT OF TRANSPORTATION

DATE	
FED PIN NO:	NA
WIN NO:	017163.02 & 017163.03

STATE OF MAINE — TIMOTHY M. ROOS — No. 12478 — PROFESSIONAL ENGINEER

SIGNATURE	
ENG. LIC. NUMBER	12478
DATE	JANUARY 17, 2022

PROJECT INFORMATION	
PROGRAM	-
PROJECT MANAGER	-
DESIGNER	AECOM
CONSULTANT	-
PROJECT RESIDENT	-
CONTRACTOR	-
PROJECT COMPLETION DATE	-

MAINE DEPARTMENT OF TRANSPORTATION
ACADIA GATEWAY FACILITY
INTERMODAL AND WELCOME CENTER

GEOTHERMAL DETAILS

SHEET NUMBER
G-002

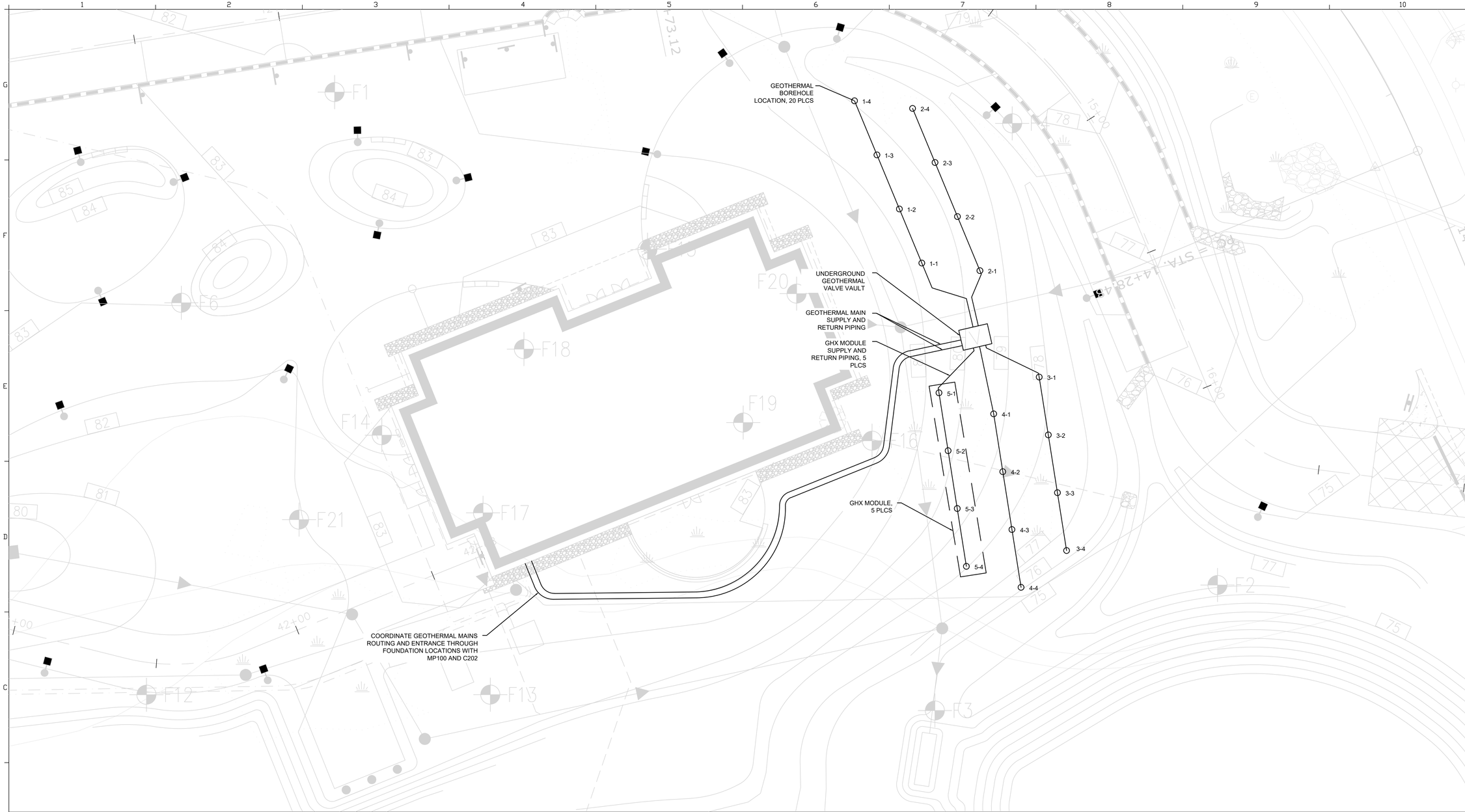

SITE LAYOUT NOTES:

1. THE GEOTHERMAL BORE FIELD CONSISTS OF TWENTY (20) VERTICAL CLOSED LOOP BORES.
2. HORIZONTAL PIPING SHALL CONNECT THE BORES TO THE UNDERGROUND VALVE VAULT IN FIVE (5) GHX MODULES. EACH GHX MODULE SHALL BE PIPED WITH STEP-DOWN REVERSE RETURN TO BALANCE PRESSURE DROP ACROSS THE BORES. VALVE VAULT SHALL BE CONNECTED TO IN-BUILDING PIPING VIA MAIN SUPPLY AND RETURN PIPES. SEE SHEET G-001 FOR DETAILS.
3. ALL HDPE PIPING MUST BE BURIED A MINIMUM 4FT BELOW FINISHED GRADE.
4. GEOTHERMAL CONTRACTOR MUST MEET THE MOST STRINGENT OF NPDES, LOCAL AND STATE REQUIREMENTS RELATED TO DRILLING, WATER MANAGEMENT, AND TRENCH CONSTRUCTION.
5. VERTICAL BORE RELATIVE LOCATIONS SHOWN, WITH 20FT MINIMUM SPACING BETWEEN BORES.
6. BORES ARE LABELED 'X-Y' WHERE X=GHX MODULE #, Y=BORE NUMBER IN GHX MODULE.
7. GEOTHERMAL CONTRACTOR SHALL STOCKPILE DRILLING SPOILS ON SITE FOR GC TO INCORPORATE INTO FINAL GRADING FILL.
8. BORE LOCATIONS SHOWN ON SITE SHALL BE MARKED BY THE GENERAL CONTRACTOR. INFORM GEOTHERMAL DESIGNER AND ARCHITECT OF ANY DISCREPANCIES AND/OR CONFLICTS.
9. OTHER FEATURES ON DRAWING MAY NOT BE ACCURATE. THIS DRAWING INTENT IS ONLY FOR IDENTIFYING BORES, AND LOCATING APPROXIMATE BORE LOCATIONS AND UNDERGROUND PIPING. CONTRACTORS MUST CONTACT DIG SAFE AND HAVE UNDERGROUND UTILITIES IN THE AREA MARKED PRIOR TO ANY EXCAVATION OR DRILLING. THE ENGINEER MAKES NO GUARANTEE THAT THE INFORMATION SHOWN HEREUPON IS ACCURATE OR COMPLETE. IT IS THE RESPONSIBILITY OF ANY PARTY WORKING ON THE SITE TO VERIFY LOCATION AND DEPTH OF UTILITIES PRIOR TO ANY EXCAVATION ACTIVITY.
10. GEOTHERMAL CONTRACTOR SHALL INSTALL SPECIFIED HORIZONTAL PIPING PER IGSHPA REQUIREMENTS AND SPECIFICATION, AND COORDINATE WITH GEOTHERMAL ENGINEER FOR INSPECTION OF FUSED JOINTS PRIOR TO BACKFILLING.
11. GEOTHERMAL CONTRACTOR SHALL INSTALL 14 GAGE COPPER WIRE OVER HORIZONTAL PIPING. THE CONTRACTOR SHALL REMOVE ANY ROCKS, THEN COVER GEOTHERMAL HORIZONTAL PIPING WITH MINIMUM 6" BEDDING SAND PRIOR TO BACKFILLING AND COMPACTING TRENCHES. CONTRACTOR RESPONSIBLE FOR INSTALLING MARKING TAPE ~1FT BELOW FINAL GRADE.
12. HDPE VALVE VAULT LOCATION TO BE COORDINATED BY CONTRACTOR. VERIFY ELEVATION OF MANHOLE ACCESS COVER AND HPDE VAULT LOCATION BEFORE INSTALLATION. HPDE VALVE VAULT MANHOLE ACCESS COVER TO BE COORDINATED SO THAT COVER IS ACCESSIBLE, VISIBLE AND LEVEL WITH SURROUNDING GRADE. HPDE VALVE VAULT MANHOLE ACCESS COVER IS TO BE EXPOSED NOT COVERED.

PROJECT KEY PLAN

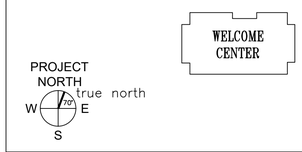

AECOM
1 FEDERAL STREET, 8TH FLOOR
BOSTON, MA 02110
617.723.1700
www.aecom.com

STATE OF MAINE
DEPARTMENT OF TRANSPORTATION

	DATE
FED PIN NO: NA	
WIN NO: 017163.02 & 017163.03	

STATE OF MAINE
TIMOTHY M. ROOS
No. 12478
PROFESSIONAL ENGINEER

PROJECT INFORMATION	
PROGRAM	–
PROJECT MANAGER	–
DESIGNER	AECOM
CONSULTANT	–
PROJECT RESIDENT	–
CONTRACTOR	–
PROJECT COMPLETION DATE	–

SIGNATURE

ENG. LIC. NUMBER 12478

DATE JANUARY 17, 2022

MAINE DEPARTMENT OF TRANSPORTATION
ACADIA GATEWAY FACILITY
INTERMODAL AND WELCOME CENTER

GEOTHERMAL
GSHX SITE LAYOUT

SHEET NUMBER

G-003

FIELD TESTING OF INDIVIDUAL VERTICAL U-BENDS AND INSTALLATION

1. PRIOR TO INSTALLATION INTO A BOREHOLE, THE CONTRACTOR SHALL VISUALLY INSPECT EACH U-BEND FOR ANY SIGNIFICANT DAMAGE (SCRATCHES, GOUGES, ETC.) THAT EXCEEDS 10% OF THE PIPE WALL THICKNESS. U-BENDS SHALL ALSO BE TESTED FOR LEAKS PRIOR TO INSERTION INTO THE BOREHOLE. ANY U-BEND LOOP ASSEMBLY THAT HAS SIGNIFICANT DAMAGE OR LEAKS SHALL NOT BE REPAIRED AND SHALL NOT BE INSERTED INTO A BOREHOLE. LEAK TESTING SHALL BE DONE BY EITHER OF THE FOLLOWING, AND THE RESULTS SUBMITTED UTILIZING THE TEST LOG SHEETS AT THE END OF SPECIFICATION SECTION 237000.
   - 1.1. WITNESS RELEASE OF PRESSURE IN LOOPS THAT ARE PRE-PRESSURIZED AND SEALED BY THE MANUFACTURER. A LACK OF CLEARLY NOTICEABLE PRESSURE RELEASE SHALL REQUIRE VERIFICATION VIA 1.2 BELOW.
   - 1.2. PERFORM HYDROSTATIC PRESSURE TEST AT ~60PSI AND OBSERVE NO LEAKS OVER A 30 MINUTE PERIOD..

2. AFTER INSERTION OF EACH LEAK FREE AND SIGNIFICANT DAMAGE FREE U-BEND INTO A BOREHOLE, SEAL THE BOREHOLE WITH THE APPROVED GROUT PER THE DESIGN DOCUMENTS. GROUT SAMPLES SHALL BE COLLECTED, TESTED AND SUBMITTED AS FOLLOWS:
   - 2.1. EACH GROUT SAMPLE SHALL BE LABELED WITH THE BORE ID,DATE AND THE PROJECT NAME.
   - 2.2. ONLY 1 GROUT SAMPLE SHALL BE TAKEN FROM ANY INDIVIDUAL BATCH OF GROUT MIX.
   - 2.3. TWO GROUT SAMPLES SHALL BE TAKEN FROM THE FIRST BOREHOLE GROUTED. AFTER THE FIRST BOREHOLE, TAKE ONE GROUT SAMPLE FOR EVERY 4TH BOREHOLE.
   - 2.4. THE GROUT SAMPLES SHALL BE TESTED BY AN INDEPENDENT TESTING LABORATORY PER ASTM D5334, AND SUBMITTED FOR THE PROJECT RECORD.

3. AFTER GROUTING THE U-BEND IN EACH BORE, PERFORM BOTH A FLOW PRESSURE DROP TEST AND HYDROSTATIC PRESSURE HOLD TEST PER THE FOLLOWING, AND SUBMIT THE RESULTS UTILIZING THE TEST LOG SHEETS AT THE END OF SPECIFICATION SECTION 237000.
   - 3.1. REFER TO FIGURE 1 BELOW FOR THE TEST SETUP.
     - 3.1.1. THE PT TEST PORTS MUST BE LOCATED TO AVOID ADDITIONAL PRESSURE DROP FROM THE SETUP. LOCATE PT PORTS WITHIN 2FT OF U-BEND PIPING, AND UTILIZE PIPE AND FITTINGS OF SAME OR LARGER DIAMETER THAN U-BEND PIPING.
     - 3.1.2. ONE INSERTION PRESSURE GAGE SHALL BE USED AT THE PT TEST PORTS DURING THE TESTING. THE GAGE SHALL HAVE GRADUATIONS DOWN TO $\frac{1}{2}$ PSI INCREMENTS FOR ACCURATE READINGS.
     - 3.1.3. THE FLOW RATE SHALL BE MEASURED TO THE NEAREST HALF GALLON PER MINUTE (GPM).
   - 3.2. <u>FLOW PRESSURE DROP TEST</u>
     - 3.2.1. FLOW WATER THROUGH U-BEND AT A MINIMUM OF 2 FT/SECOND FOR A MINIMUM OF 15 MINUTES, UNTIL FULLY FLUSHED OF DEBRIS AND PURGED OF AIR. SEE THE MINIMUM PURGING FLOW RATE ON G-001 TABLE 'GHX SYSTEM DESIGN INFORMATION'. NOTE THAT HIGHER PURGE FLOW RATES WILL RESULT IN FASTER FLUSHING AND PURGING, BUT KEEP PRESSURES BELOW THE PIPE PRESSURE RATINGS.
     - 3.2.2. AFTER FULLY FLUSHED AND PURGED, SET THE FLOW RATE TO THE VALUES ON SHEET G-001 AS SHOWN IN TABLE 'TYPICAL REVERSE-RETURN GHX MODULE' FOR 'MINIMUM PURGING FLOW' OF THE U-BEND.
     - 3.2.3. MEASURE THE PRESSURE DROP (THE DIFFERENCE BETWEEN PRESSURE READINGS AT THE 'IN' AND 'OUT' PT SAMPLING PORTS). USE THE SAME INSERTION GAGE AT EACH PORT WHILE THE FLOW REMAINS CONSTANT.
     - 3.2.4. COMPARE THE MEASURED PRESSURE DROP TO THE ANTICIPATED PRESSURE DROP FOR THE U-BEND PER G-001. A VALUE MORE THAN 10% HIGHER THAN THE ANTICIPATED PRESSURE DROP INDICATES THAT THE U-BEND IS NOT FULLY FLUSHED OR PURGED, OR IS PARTIALLY COLLAPSED OR KINKED. IF FURTHER FLUSHING AND PURGING DOES NOT RESULT IN AN ACCEPTABLE PRESSURE DROP, THEN THE U-BEND MUST BE REPLACED BY THE CONTRACTOR AT NO ADDITIONAL COST.
   - 3.3. <u>HYDROSTATIC PRESSURE HOLD TEST</u>
     - 3.3.1. UTILIZE ASTM F2164-18 FOR THE STANDARD PRACTICES FOR FIELD LEAK TESTING OF POLYETHYLENE PIPING USING HYDROSTATIC PRESSURE. THE FOLLOWING PROVIDES A SUMMARY OF THE TESTING PROCESS FOR CONVENIENCE. REFER TO THE ASTM STANDARD FOR DETAILS, ESPECIALLY RELATED TO SAFETY.
     - *3.3.2.* *INITIAL EXPANSION PHASE:* AFTER THE U-BEND IS FULLY PURGED OF AIR, PRESSURIZE THE U-BEND TO 100 PSI FOR 4 HOURS. RE-PRESSURIZE AS NEEDED TO 100 PSI DURING THIS PERIOD.
     - *3.3.3.* *TEST PHASE:* REDUCE THE PRESSURE TO 90 PSI AND MONITOR FOR 1 HOUR WITHOUT INCREASING PRESSURE OR ADDING MAKE-UP WATER.
     - *3.3.4.* *PASS/FAIL:* THE U-BEND PASSES THE TEST IF FOR 1 HOUR THERE IS NO VISUAL LEAKAGE AND THE PRESSURE REMAINS WITHIN 5% OF 90 PSI.
     - 3.3.5. A U-BEND THAT DOES NOT PASS THE TEST MUST BE REPLACED BY THE CONTRACTOR AT NO ADDITIONAL COST.

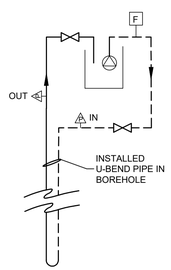

FIGURE 1: U-BEND FLOW PRESSURE DROP AND HYDROSTATIC TEST SETUP

FIELD TESTING OF COMPLETED GHX MODULE OR HEADER PIPING PRIOR TO BEDDING AND BACKFILL

1. THE HDPE PIPING FUSED JOINTS MUST BE VISUALLY INSPECTED BY THE GEOTHERMAL DESIGNER OR OTHER QUALIFIED AND APPROVED INSPECTOR. ANY VISUALLY UNACCEPTABLE FUSED JOINTS, OR SIGNIFICANT DAMAGE THAT EXCEEDS 10% OF THE PIPE WALL THICKNESS, MUST BE REPLACED BY THE CONTRACTOR AT NO ADDITIONAL COST.

2. AFTER ALL THE PIPING AND FUSED JOINTS ARE VISUALLY ACCEPTABLE TO THE INSPECTOR, PERFORM BOTH A FLOW PRESSURE DROP TEST AND HYDROSTATIC PRESSURE HOLD TEST PER THE FOLLOWING, AND SUBMIT THE RESULTS UTILIZING THE TEST LOG SHEETS AT THE END OF SPECIFICATION SECTION 237000.
   - 2.1. REFER TO FIGURE 2 BELOW FOR THE TEST SETUP.
     - 2.1.1. THE PT TEST PORTS MUST BE LOCATED TO AVOID ADDITIONAL PRESSURE DROP FROM THE SETUP. LOCATE PT PORTS WITHIN 2FT OF GHX MODULE HEADER PIPING, AND UTILIZE PIPE AND FITTINGS OF SAME OR LARGER DIAMETER THAN HEADER PIPING.
     - 2.1.2. ONE INSERTION PRESSURE GAGE SHALL BE USED AT THE PT TEST PORTS DURING THE TESTING. THE GAGE SHALL HAVE GRADUATIONS DOWN TO $\frac{1}{2}$ PSI INCREMENTS FOR ACCURATE READINGS.
     - 2.1.3. THE FLOW RATE SHALL BE MEASURED TO THE NEAREST HALF GALLON PER MINUTE (GPM).
   - 2.2. <u>FLOW PRESSURE DROP TEST</u>
     - 2.2.1. FLOW WATER THROUGH EACH GHX MODULE OR HEADERS AT A MINIMUM OF 2 FT/SECOND THROUGH <u>EVERY</u> SECTION OF PIPE FOR A MINIMUM OF 15 MINUTES, UNTIL FULLY FLUSHED OF DEBRIS AND PURGED OF AIR. SEE THE MINIMUM PURGING FLOW RATE ON G-001 TABLE 'GHX SYSTEM DESIGN INFORMATION'. NOTE THAT HIGHER PURGE FLOW RATES WILL RESULT IN FASTER FLUSHING AND PURGING, BUT KEEP PRESSURES BELOW THE PIPE PRESSURE RATINGS.
     - 2.2.2. AFTER FULLY FLUSHED AND PURGED, SET THE FLOW RATE TO THE VALUES ON SHEET G-001 AS SHOWN IN TABLE 'GHX SYSTEM DESIGN INFORMATION' FOR 'PURGING PRESSURE DROP' OF THE GHX MODULE.
     - 2.2.3. MEASURE THE PRESSURE DROP (THE DIFFERENCE BETWEEN PRESSURE READINGS AT THE 'IN' AND 'OUT' PT SAMPLING PORTS). USE THE SAME INSERTION GAGE AT EACH PORT WHILE THE FLOW REMAINS CONSTANT.
     - 2.2.4. COMPARE THE MEASURED PRESSURE DROP TO THE ANTICIPATED PRESSURE DROP FOR THE GHX MODULE OR HEADERS PER G-001. A VALUE MORE THAN 10% HIGHER THAN THE ANTICIPATED PRESSURE DROP INDICATES THAT THE PIPING IS NOT FULLY FLUSHED OR PURGED, OR SOME OTHER ISSUE. THE CONTRACTOR MUST FIND AND FIX THE ISSUE UNTIL IT PASSES RETESTING AT NO ADDITIONAL COST.
   - 2.3. <u>HYDROSTATIC PRESSURE HOLD TEST</u>
     - 2.3.1. FOR EACH GHX MODULE OR HEADER, UTILIZE ASTM F2164-18 FOR THE STANDARD PRACTICES FOR FIELD LEAK TESTING OF POLYETHYLENE PIPING USING HYDROSTATIC PRESSURE. THE FOLLOWING PROVIDES A SUMMARY OF THE TESTING PROCESS FOR CONVENIENCE. REFER TO THE ASTM STANDARD FOR DETAILS, ESPECIALLY RELATED TO SAFETY.
     - *2.3.2.* *INITIAL EXPANSION PHASE:* AFTER THE PIPING IS FULLY PURGED OF AIR, PRESSURIZE TO 100 PSI FOR 4 HOURS. RE-PRESSURIZE AS NEEDED TO 100 PSI DURING THIS PERIOD.
     - *2.3.3.* *TEST PHASE:* REDUCE THE PRESSURE TO 90 PSI AND MONITOR FOR 1 HOUR WITHOUT INCREASING PRESSURE OR ADDING MAKE-UP WATER.
     - *2.3.4.* *PASS/FAIL:* THE PIPING PASSES THE TEST IF FOR 1 HOUR THERE IS NO VISUAL LEAKAGE AND THE PRESSURE REMAINS WITHIN 5% OF 90 PSI.
     - 2.3.5. PIPING THAT DOES NOT PASS THE TEST MUST BE REPAIRED AND RETESTED UNTIL IT PASSES BY THE CONTRACTOR AT NO ADDITIONAL COST.
   - 2.4. THE PIPING IS READY TO BE BEDDED AND BACKFILLED PER DRAWING AND SPECIFICATION REQUIREMENTS AFTER SATISFACTORILY PASSING ALL TESTS.

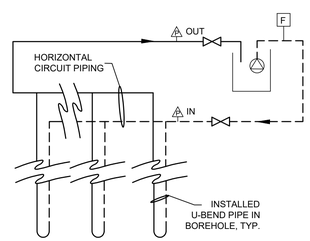

FIGURE 2: GHX MODULE FLOW PRESSURE DROP AND HYDROSTATIC TEST SETUP

FIELD TESTING OF COMPLETED GEOTHERMAL PIPING SYSTEM

1. AFTER THE ENTIRE GEOTHERMAL PIPING SYSTEM IS INSTALLED AND BACKFILLED ACCORDING TO THE PROJECT DOCUMENTS, PERFORM BOTH A FLOW PRESSURE DROP TEST ON EACH GHX MODULE AND HYDROSTATIC PRESSURE HOLD TEST ON THE ENTIRE GEOTHERMAL PIPING NETWORK PER THE FOLLOWING. SUBMIT THE RESULTS UTILIZING THE TEST LOG SHEETS AT THE END OF SPECIFICATION SECTION 237000.
   - 1.1. UTILIZE THE PT TEST PORTS AT THE TAKEOFFS FOR EACH GHX MODULE AT THE MANIFOLD IN THE VALVE VAULT.
   - 1.2. ONE INSERTION PRESSURE GAGE SHALL BE USED AT THE PT TEST PORTS DURING THE TESTING. THE GAGE SHALL HAVE GRADUATIONS DOWN TO $\frac{1}{2}$ PSI INCREMENTS FOR ACCURATE READINGS.
   - 1.3. THE FLOW RATE SHALL BE MEASURED TO THE NEAREST HALF GALLON PER MINUTE (GPM).
   - 1.1. <u>FLOW PRESSURE DROP TEST</u>
     - 1.1.1. FLOW WATER THROUGH EACH GHX MODULE AT A MINIMUM OF 2 FT/SECOND THROUGH <u>EVERY</u> SECTION OF PIPE FOR A MINIMUM OF 15 MINUTES, UNTIL FULLY FLUSHED OF DEBRIS AND PURGED OF AIR. SEE THE MINIMUM PURGING FLOW RATE ON G-001 TABLE 'GHX SYSTEM DESIGN INFORMATION'. NOTE THAT HIGHER PURGE FLOW RATES WILL RESULT IN FASTER FLUSHING AND PURGING, BUT KEEP PRESSURES BELOW THE PIPE PRESSURE RATINGS.
     - 1.1.2. AFTER FULLY FLUSHED AND PURGED, SET THE FLOW RATE TO THE VALUES ON SHEET G-001 AS SHOWN IN TABLE 'GHX SYSTEM DESIGN INFORMATION' FOR 'PURGING PRESSURE DROP' OF THE GHX MODULE.
     - 1.1.3. MEASURE THE PRESSURE DROP ACROSS THE GHX MODULE. USE THE SAME INSERTION GAGE AT EACH PORT WHILE THE FLOW REMAINS CONSTANT.
     - 1.1.4. COMPARE THE MEASURED PRESSURE DROP TO THE ANTICIPATED PRESSURE DROP FOR THE GHX MODULE PER G-001. A VALUE MORE THAN 10% HIGHER THAN THE ANTICIPATED PRESSURE DROP INDICATES THAT THE PIPING IS NOT FULLY FLUSHED OR PURGED, OR SOME OTHER ISSUE. THE CONTRACTOR MUST FIND AND FIX THE ISSUE UNTIL IT PASSES RETESTING AT NO ADDITIONAL COST.
   - 1.2. <u>HYDROSTATIC PRESSURE HOLD TEST</u>
     - 1.2.1. FOR THE ENTIRE PIPING SYSTEM WITH ALL VALVES OPEN (OTHER THAN ISOLATION VALVES FROM THE IN-BUILDING PIPING INSIDE THE MECHANICAL ROOM), UTILIZE ASTM F2164-18 FOR THE STANDARD PRACTICES FOR FIELD LEAK TESTING OF POLYETHYLENE PIPING USING HYDROSTATIC PRESSURE. THE FOLLOWING PROVIDES A SUMMARY OF THE TESTING PROCESS FOR CONVENIENCE. REFER TO THE ASTM STANDARD FOR DETAILS, ESPECIALLY RELATED TO SAFETY.
     - *1.2.2.* *INITIAL EXPANSION PHASE:* AFTER THE PIPING IS FULLY PURGED OF AIR, PRESSURIZE TO 100 PSI FOR 4 HOURS. RE-PRESSURIZE AS NEEDED TO 100 PSI DURING THIS PERIOD.
     - *1.2.3.* *TEST PHASE:* REDUCE THE PRESSURE TO 90 PSI AND MONITOR FOR 1 HOUR WITHOUT INCREASING PRESSURE OR ADDING MAKE-UP WATER.
     - *1.2.4.* *PASS/FAIL:* THE PIPING PASSES THE TEST IF FOR 1 HOUR THERE IS NO VISUAL LEAKAGE AND THE PRESSURE REMAINS WITHIN 5% OF 90 PSI.
     - 1.2.5. PIPING THAT DOES NOT PASS THE TEST MUST BE REPAIRED AND RETESTED UNTIL IT PASSES BY THE CONTRACTOR AT NO ADDITIONAL COST.
   - 1.3. THE GEOTHERMAL PIPING SYSTEM PIPING IS READY TO HAVE WATER QUALITY ADJUSTED AND ANTIFREEZE ADDED PER DRAWING AND SPECIFICATION REQUIREMENTS AFTER SATISFACTORILY PASSING ALL TESTS.

PROJECT KEY PLAN

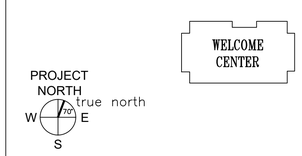

AECOM
1 FEDERAL STREET, 8TH FLOOR
BOSTON, MA 02110
617.723.1700
www.aecom.com

STATE OF MAINE
DEPARTMENT OF TRANSPORTATION

DATE

FED PIN NO: NA

WIN NO: 017163.02 & 017163.03

STATE OF MAINE
TIMOTHY M. ROOS
No. 12478
PROFESSIONAL ENGINEER

SIGNATURE		
ENG. LIC. NUMBER	12478	
DATE	JANUARY 17, 2022	

PROJECT INFORMATION		DATE
PROGRAM	–	–
PROJECT MANAGER	–	–
DESIGNER	AECOM	–
CONSULTANT	–	–
PROJECT RESIDENT	–	–
CONTRACTOR	–	–
PROJECT COMPLETION DATE	–	–

MAINE DEPARTMENT OF TRANSPORTATION
ACADIA GATEWAY FACILITY
INTERMODAL AND WELCOME CENTER

GEOTHERMAL
TESTING METHODS

SHEET NUMBER

G-004

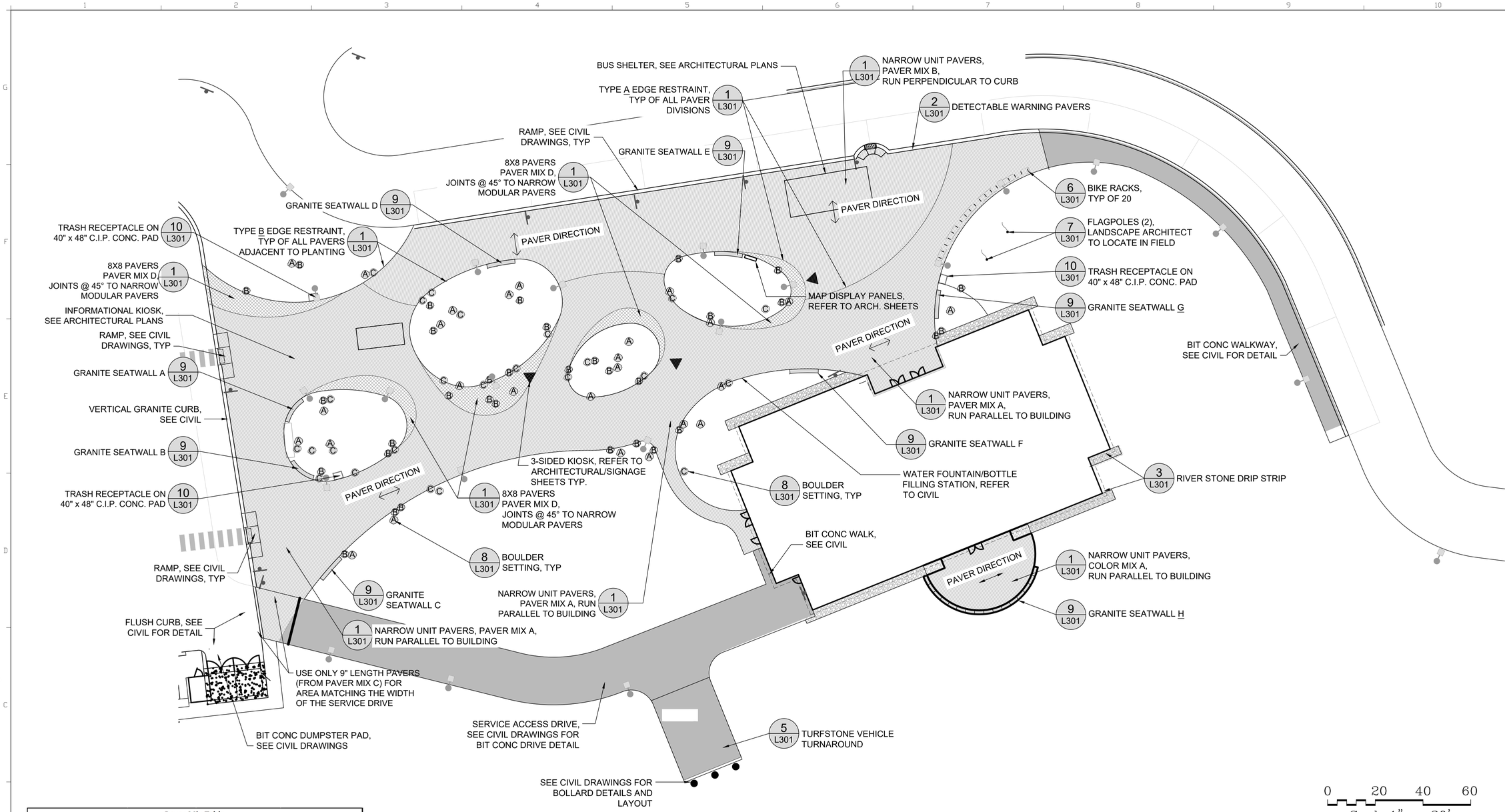

0 20 40 60
Scale:1" = 20'

Paver Mix Table			
Mix	Color	Sizes	% of Mix
Paving Mix A	Cream	9"x3"	10
		18"x3"	10
		24"x3"	10
	Light Gray	9"x3"	22
		18"x3"	22
		24"x3"	21
	Charcoal	18"x3"	5
Paving Mix B	Cream	9"x3"	22
		18"x3"	22
		24"x3"	21
	Light Gray	9"x3"	10
		18"x3"	10
		24"x3"	10
	Charcoal	18"x3"	5
Paving Mix C	Cream	9"x3"	30
	Light Gray	9"x3"	70
Paving Mix D	Charcoal	8"x8"	100

PAVER NOTE:
RANDOM COLOR AND SIZE DISTRIBUTION THROUGHOUT PAVING FIELD, SEE SPECS.

Granite Seat Wall Schedule				
Seat Wall	Quantity	Outside Length	Inside Length	Outside Radius
A	3	4'-0"	3'-7 1/2"	17'-0"
B	3	4'-0"	3'-7 1/2"	17'-0"
C	3	4'-0"	3'-11 1/2"	145'-0"
D	3	4'-0"	3'-11"	73'-0"
E	3	4'-0"	3'-10"	42'-0"
F	3	4'-0"	3'-11"	100'-0 1/2"
G	3	4'-0"	3'-11"	65'-0"
H	16	4'-0"	3'-9"	25'-2 1/2"
All seat wall stones to be 1'-9" High and 1'-8" wide. See detail 8/L301 for additional information.				

SCHEDULE OF BOULDER SIZES		
SYMBOL	SIZE	QUANTITY
A	36"X36" - 42"X42"	26
B	24"X24" - 36"X36"	33
C	18"X18" - 24"X24"	24

BOULDER NOTE:
LANDSCAPE ARCHITECT/OWNERS REP. TO DIRECT PLACEMENT OF BOULDERS IN FIELD.

PROJECT KEY PLAN

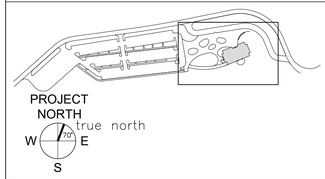

AECOM
1 FEDERAL STREET, 8TH FLOOR
BOSTON, MA 02110
617.723.1700
www.aecom.com

STATE OF MAINE
DEPARTMENT OF TRANSPORTATION

DATE

FED PIN NO: NA
WIN NO: 017163.02 & 017163.03

REGISTERED LANDSCAPE ARCHITECT SAMUEL R. COPLON No. 100 STATE OF MAINE

PROJECT INFORMATION	
PROGRAM	–
PROJECT MANAGER	–
DESIGNER	AECOM
CONSULTANT	–
PROJECT RESIDENT	–
CONTRACTOR	–
PROJECT COMPLETION DATE	–

SIGNATURE –
ARCH. LIN. NUMBER –
DATE JANUARY 17, 2022

MAINE DEPARTMENT OF TRANSPORTATION
ACADIA GATEWAY FACILITY
INTERMODAL AND WELCOME CENTER

PLAZA MATERIALS PLAN

SHEET NUMBER
L101

C:\Users\Sam\AppData\Local\Temp\AcPublish_2948\AGC Layout & Materials.dwg Jan 25, 2022 - 4:06pm

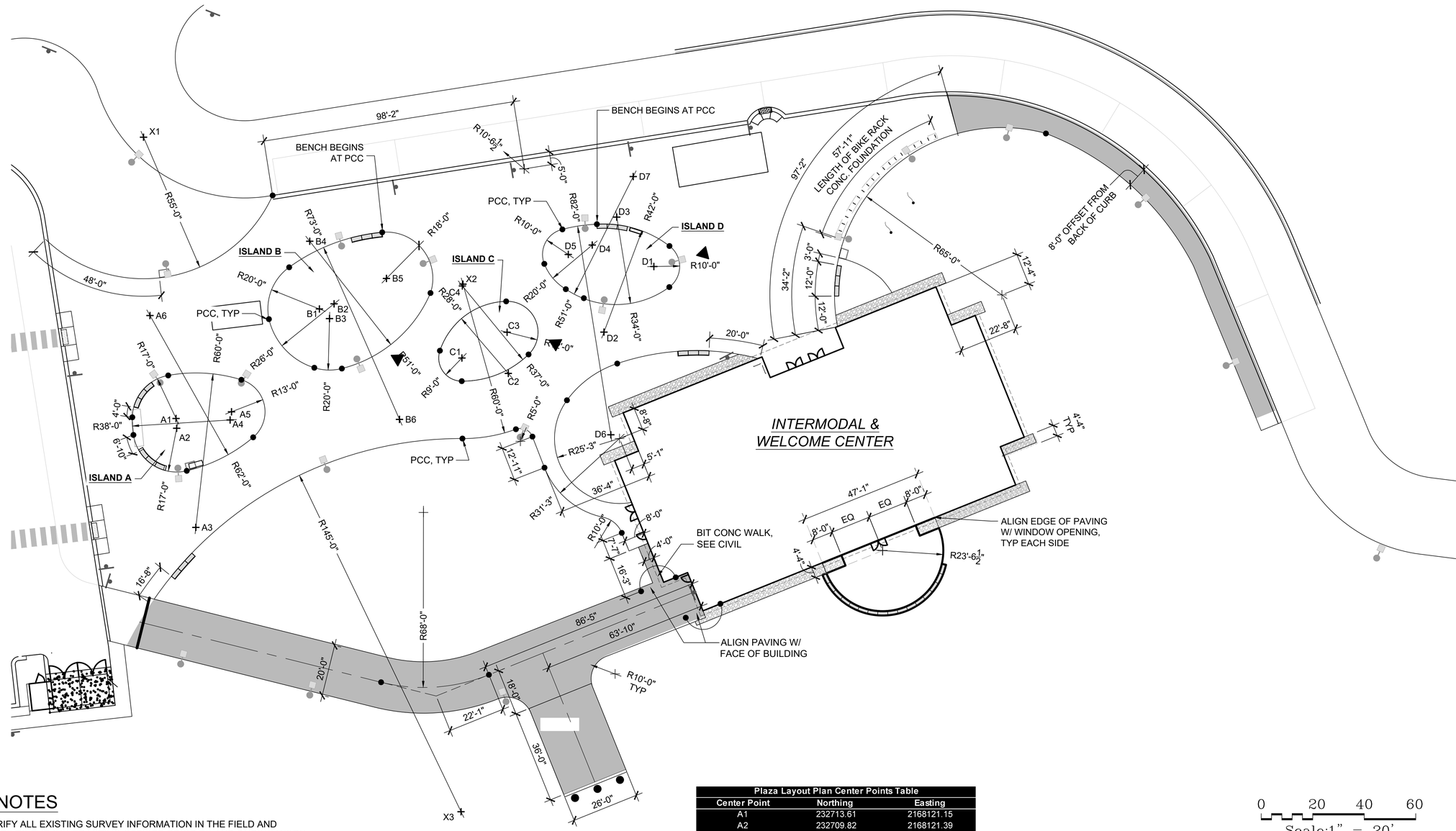

SITE LAYOUT NOTES

1. CONTRACTOR SHALL VERIFY ALL EXISTING SURVEY INFORMATION IN THE FIELD AND REPORT ANY DISCREPANCIES TO THE CONTRACTING OFFICER PRIOR TO AND DURING WORK. ALL FIELD ADJUSTMENTS TO BE APPROVED BY THE OWNER'S REPRESENTATIVE PRIOR TO IMPLEMENTATION.

2. SURVEY LAYOUT - FEATURES SHOWN ON THIS PLAN ARE INTENDED TO BE LAID OUT OR MARKED FOR CONSTRUCTION ON THE GROUND USING LAND SURVEYING INSTRUMENTATION WITH A RELATIVE PRECISION OF 0.04 FEET OR BETTER, UNLESS OTHERWISE SPECIFIED IN WRITING BY THE OWNER'S REPRESENTATIVE. OWNER SHALL SUPPLY ELECTRONIC FILE FOR PROJECT LAYOUT.

3. ALL LINES ARE PERPENDICULAR OR PARALLEL TO THE LINES FROM WHICH THEY ARE MEASURED UNLESS OTHERWISE INDICATED.

4. V.I.F. - VERIFY LOCATION IN FIELD WITH OWNER'S REPRESENTATIVE PRIOR TO IMPLEMENTATION.

5. P.O.B. - POINT OF BEGINNING

6. COORDINATE WITH OTHER DRAWINGS AS REQUIRED.

7. SEE CIVIL DRAWINGS FOR ALL CURBING AND SIGNAGE LAYOUT, NOTES, AND DETAILS

8. LANDSCAPE ARCHITECT TO APPROVE ALL SEAT WALL AND TRASH RECEPTACLE CONCRETE SLAB LOCATIONS PRIOR TO CONSTRUCTION

Plaza Layout Plan Center Points Table

Center Point	Northing	Easting
A1	232713.61	2168121.15
A2	232709.82	2168121.39
A3	232671.3	2168128.84
A4	232713.04	2168142.14
A5	232716.22	2168142.69
A6	232753.61	2168111.02
B1	232756.17	2168176.81
B2	232758.17	2168182.52
B3	232752.43	2168180.75
B4	232782.47	2168173.08
B5	232768.03	2168202.86
B6	232713.27	2168207.93
C1	232737.12	2168232.15
C2	232731.13	2168250.19
C3	232747.13	2168249.71
C4	232765.12	2168232.35
D1	232772.67	2168306.7
D2	232747.19	2168287.34
D3	232791.86	2168292.3
D4	232781.01	2168282.77
D5	232777.35	2168273.47
D6	232707.28	2168289.99
D7	232807.62	2168298.69
X1	232822.92	2168108.53
X2	232765.81	2168232.58
X3	232560.81	2168231.82

0 20 40 60
Scale:1" = 20'

PROJECT KEY PLAN

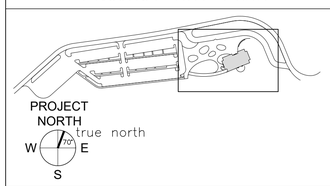

ALL LANDSCAPE WORK SHOWN IS LUMP SUM

AECOM
1 FEDERAL STREET, 8TH FLOOR
BOSTON, MA 02110
617.723.1700
www.aecom.com

STATE OF MAINE
DEPARTMENT OF TRANSPORTATION

	DATE

FED PIN NO: NA
WIN NO: 017163.02 & 017163.03

REGISTERED LANDSCAPE ARCHITECT SAMUEL R. COPLON No. 100 STATE OF MAINE

SIGNATURE –
ARCH. LIN. NUMBER –
DATE JANUARY 17, 2022

PROJECT INFORMATION

PROGRAM	–
PROJECT MANAGER	–
DESIGNER	AECOM
CONSULTANT	–
PROJECT RESIDENT	–
CONTRACTOR	–
PROJECT COMPLETION DATE	–

MAINE DEPARTMENT OF TRANSPORTATION
ACADIA GATEWAY FACILITY
INTERMODAL AND WELCOME CENTER

PLAZA LAYOUT PLAN

SHEET NUMBER
L102

C:\Users\Sam\AppData\Local\Temp\AcPublish_2948\AGC Layout & Materials.dwg Jan 25, 2022 - 4:06pm

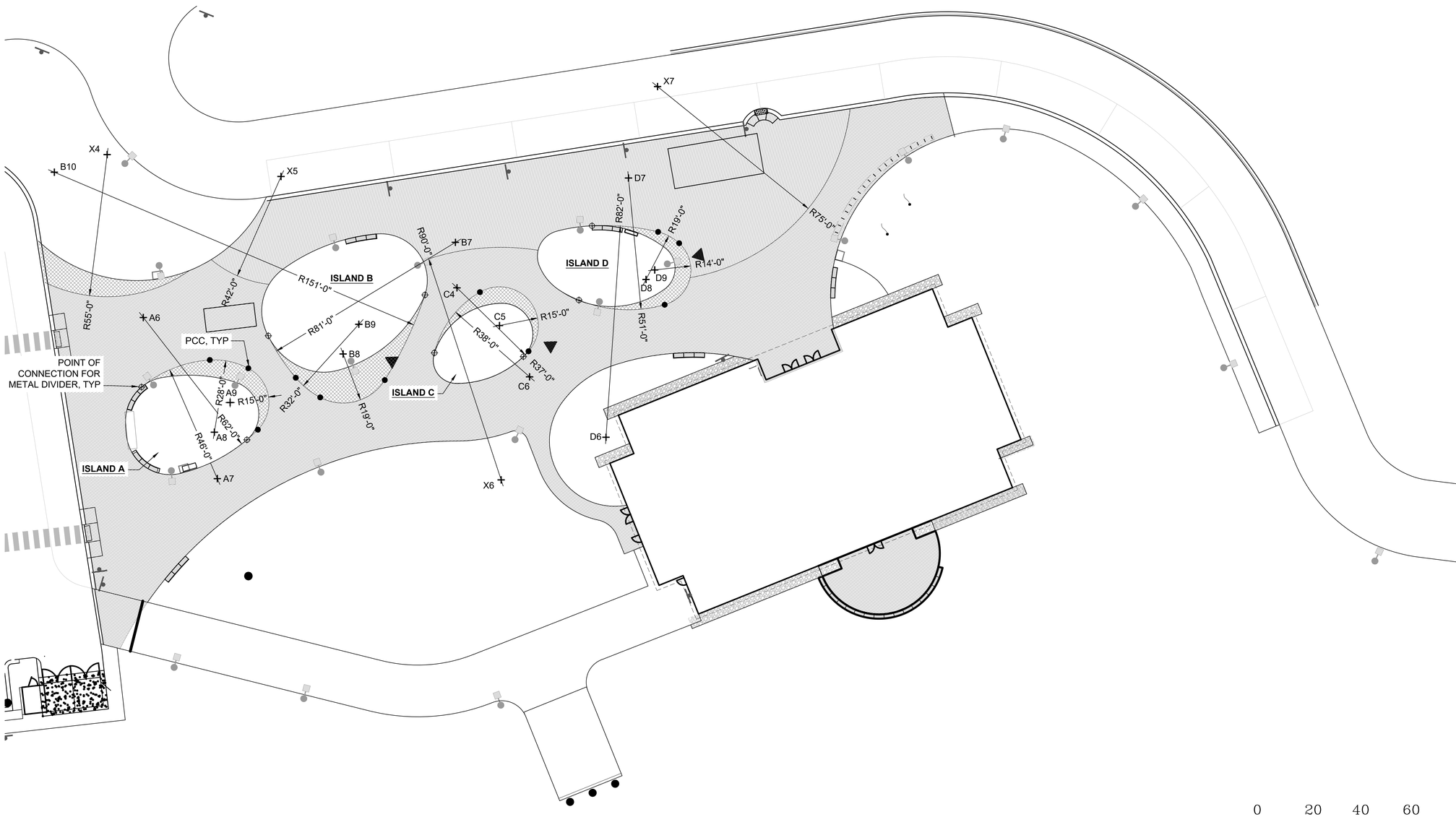

Plaza Paving Layout Plan Center Points Table		
Center Point	Northing	Easting
A6	232753.61	2168111.02
A7	232691.27	2168139.64
A8	232709.23	2168138.5
A9	232720.72	2168144.59
B7	232782.71	2168231.74
B8	232739.51	2168188.31
B9	232751	2168194.38
B10	232809.85	2168076.61
C4	232765.12	2168232.35
C5	232750.51	2168248.8
C6	232730.67	2168260.43
D6	232707.28	2168289.99
D7	232807.62	2168298.69
D8	232768.34	2168305.47
D9	232772.04	2168308.84
X4	232816.67	2168097.03
X5	232808.2	2168164.28
X6	232690.78	2168249.42
X7	232843	2168309.94

0 20 40 60
Scale:1" = 20'

PROJECT KEY PLAN

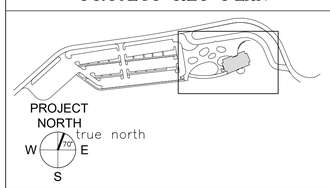

AECOM
1 FEDERAL STREET, 8TH FLOOR
BOSTON, MA 02110
617.723.1700
www.aecom.com

STATE OF MAINE
DEPARTMENT OF TRANSPORTATION

	DATE

FED PIN NO: NA
WIN NO: 017163.02 & 017163.03

REGISTERED LANDSCAPE ARCHITECT
SAMUEL R. COPLON
No. 100
STATE OF MAINE

SIGNATURE –
ARCH. LIN. NUMBER –
DATE JANUARY 17, 2022

PROJECT INFORMATION

PROGRAM	–
PROJECT MANAGER	–
DESIGNER	AECOM
CONSULTANT	–
PROJECT RESIDENT	–
CONTRACTOR	–
PROJECT COMPLETION DATE	–

MAINE DEPARTMENT OF TRANSPORTATION
ACADIA GATEWAY FACILITY
INTERMODAL AND WELCOME CENTER

PLAZA PAVING LAYOUT PLAN

SHEET NUMBER
L103

C:\Users\Sam\AppData\Local\Temp\AcPublish_2948\AGC Layout & Materials.dwg Jan 25, 2022 - 4:06pm

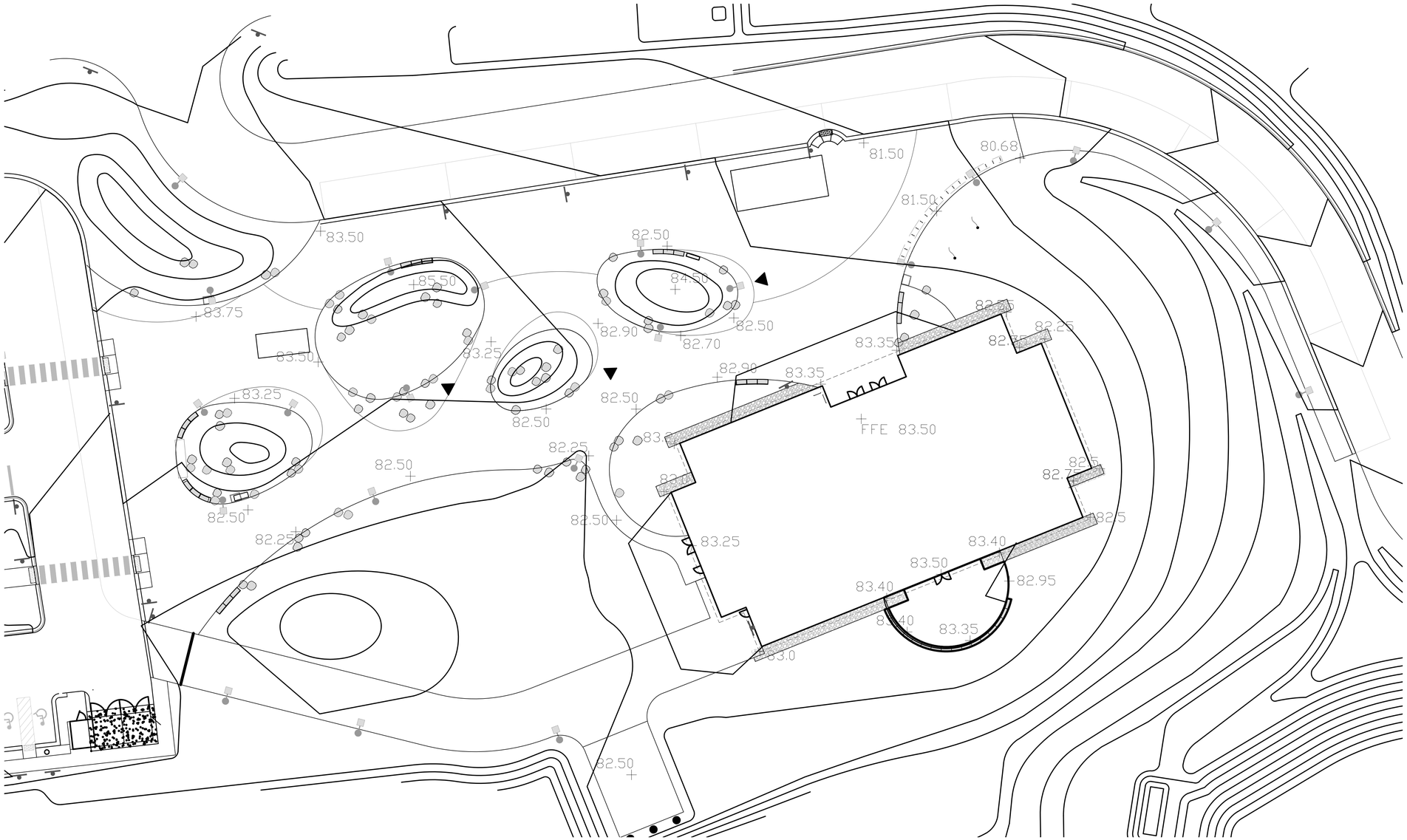

0 20 40 60

Scale:1" = 20'

SITE GRADING NOTES

1. CONTRACTOR TO VERIFY ELEVATIONS OF PROPOSED DESIGNS, GRADING, ETC. PRIOR TO CONSTRUCTION. ANY DISCREPANCIES SHALL BE NOTED IMMEDIATELY TO OWNER'S REPRESENTATIVE.

2. PROPOSED GRADES TO BLEND SMOOTHLY INTO EXISTING GRADES.

3. ALL GRADES TO BE VERIFIED BY OWNER'S REPRESENTATIVE PRIOR TO AND DURING WORK.

4. LOAM, SEED, AND MULCH ALL DISTURBED AREAS NOT NOTED TO RECEIVE OTHER TREATMENT.

5. COORDINATE WITH CIVIL DRAWINGS. SEE CIVIL DRAWINGS FOR ALL DRAIN BASIN AND DRAIN LINE INFORMATION.

6. SEE SHEET L101 FOR BOULDER SCHEDULE AND SHEET L302 FOR REPRESENTATIVE MOUND SECTIONS.

PROJECT KEY PLAN

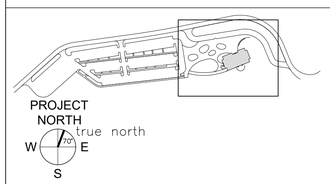

AECOM
1 FEDERAL STREET, 8TH FLOOR
BOSTON, MA 02110
617.723.1700
www.aecom.com

STATE OF MAINE
DEPARTMENT OF TRANSPORTATION

	DATE

FED PIN NO: NA

WIN NO: 017163.02 & 017163.03

REGISTERED LANDSCAPE ARCHITECT
SAMUEL R. COPLON
No. 100
STATE OF MAINE

PROJECT INFORMATION	
PROGRAM	–
PROJECT MANAGER	–
DESIGNER	AECOM
CONSULTANT	–
PROJECT RESIDENT	–
CONTRACTOR	–
PROJECT COMPLETION DATE	–

SIGNATURE –

ARCH. LIN. NUMBER –

DATE JANUARY 17, 2022

MAINE DEPARTMENT OF TRANSPORTATION
ACADIA GATEWAY FACILITY
INTERMODAL AND WELCOME CENTER

PLAZA GRADING PLAN

SHEET NUMBER
L104

C:\Users\Sam\AppData\Local\Temp\AcPublish_2948\AGC Layout & Materials.dwg Jan 25, 2022 - 4:06pm

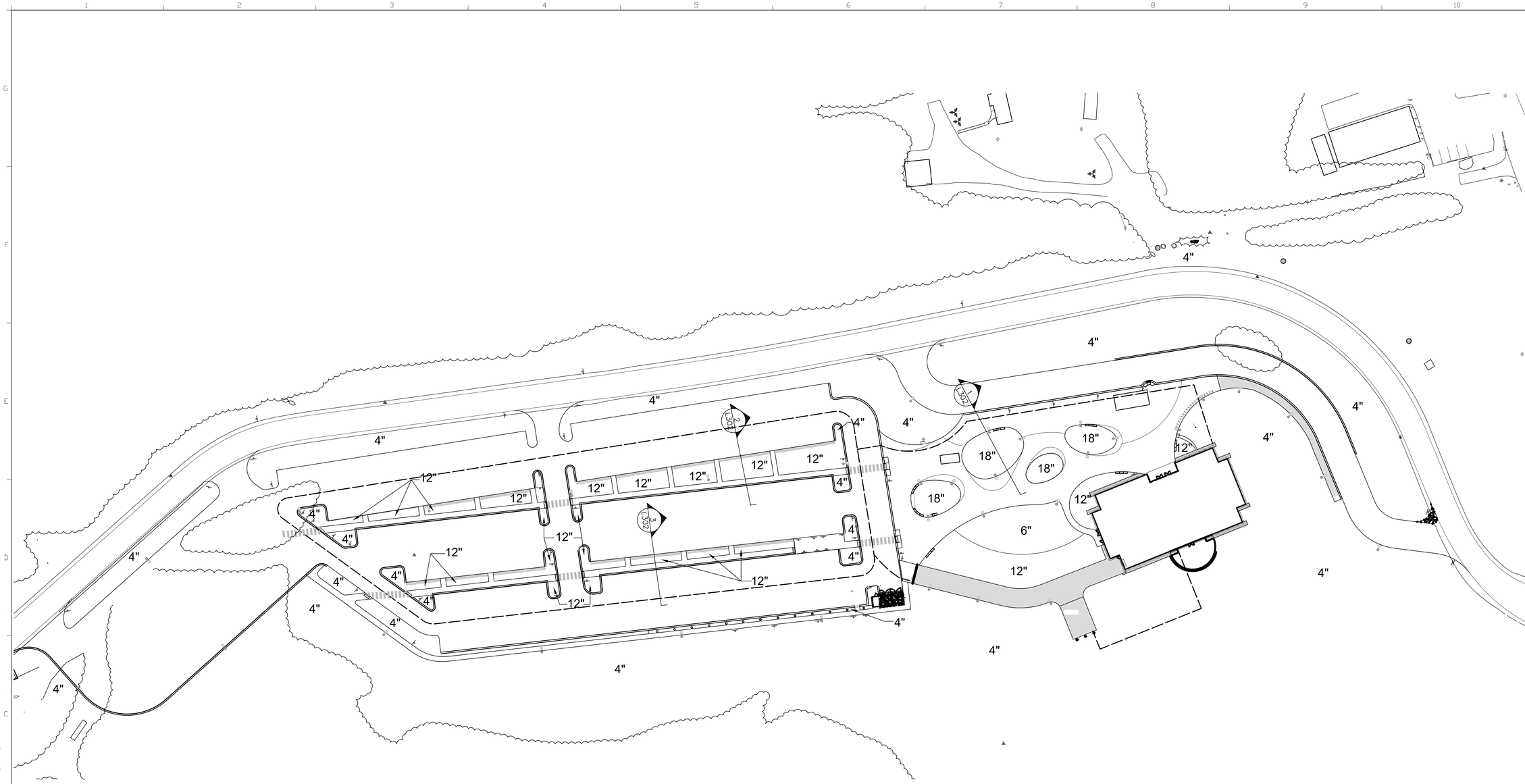

NOTES:
1. REFER TO TOPSOIL SPECIFICATIONS FOR PLANTING SOIL REQUIREMENTS
2. FOR SECTION REFERENCES SEE SHEET l302

0 50 100 150
Scale:1" = 50'

PROJECT KEY PLAN

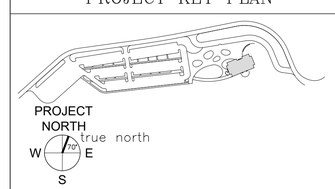

AECOM
1 FEDERAL STREET, 8TH FLOOR
BOSTON, MA 02110
617.723.1700
www.aecom.com

STATE OF MAINE
DEPARTMENT OF TRANSPORTATION

DATE

FED PIN NO: NA

WIN NO: 017163.02 & 017163.03

REGISTERED LANDSCAPE ARCHITECT
SAMUEL R. COPLON
No. 100
STATE OF MAINE

SIGNATURE

ARCH. LIN. NUMBER

DATE JANUARY 17, 2022

PROJECT INFORMATION	
PROGRAM	-
PROJECT MANAGER	-
DESIGNER	AECOM
CONSULTANT	-
PROJECT RESIDENT	-
CONTRACTOR	-
PROJECT COMPLETION DATE	-

MAINE DEPARTMENT OF TRANSPORTATION
ACADIA GATEWAY FACILITY
INTERMODAL AND WELCOME CENTER

SITE TOPSOIL DEPTH PLAN

SHEET NUMBER
L201

C:\Users\Sam\AppData\Local\Temp\AcPublish_2948\AGC Planting.dwg Jan 25, 2022 - 3:56pm

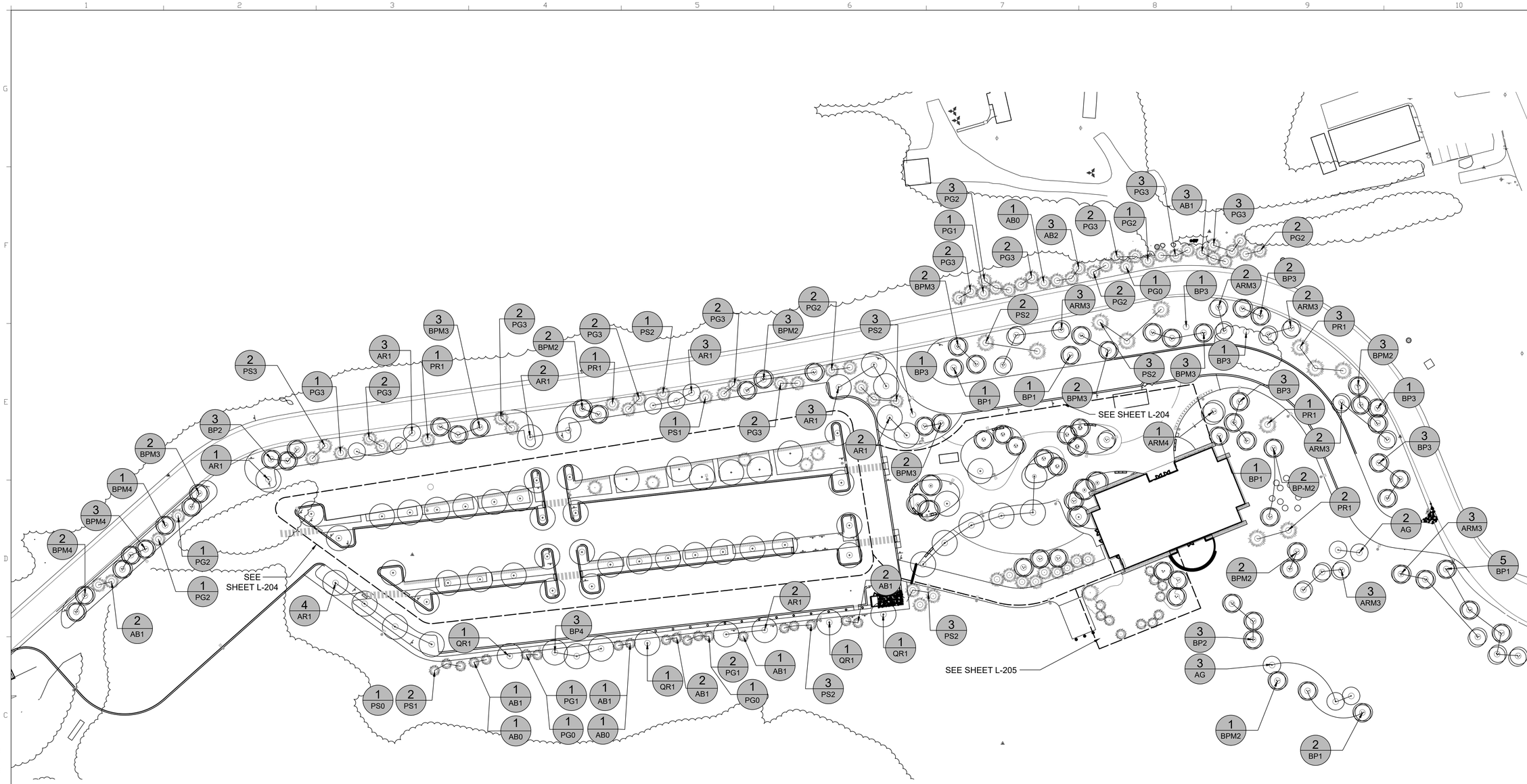

NOTES:
1) FOR TOPSOIL DEPTHS SEE SHEET L201
2) FOR PLANTING NOTES, DETAILS, & MASTER PLANT LIST SEE SHEET L206
3) ALL SEEDED AREAS TO BE SPECIFIED MEADOW MIX UNLESS OTHERWISE NOTED.

ALL LANDSCAPE WORK SHOWN IS PER PAY ITEM
REFER TO MASTER PLANT LIST SHEET L206
AND SPECIFICATIONS FOR PAY ITEM REFERENCE

SITE TREE PLANTING SCHEDULE SHEET L202

QTY	SYM	BOTANICAL NAME	COMMON NAME	SIZE	ROOT	REMARKS
DECIDUOUS TREES						
20	AR1	Acer rubrum 'Red Sunset'	Red Sunset Red Maple	2"-2 1/2" Cal.	B&B	Single leader, Specimen
15	ARM-3	Acer rubrum 'Red Sunset'	Red Sunset Red Maple	10'-12'	B&B	Multileader, Specimen. Min. 3 leaders
1	ARM-4	Acer rubrum 'Red Sunset'	Red Sunset Red Maple	12'-14'	B&B	Multileader, Specimen. Min. 3 leaders
5	AG	Amelanchier grandiflora 'Robin Hill'	Robin Hill Serviceberry	2"-2.5" Cal.	B&B	Multistem, Clump Specimen
10	BP-1	Betula populifolia "White Spire'	White Spire Gray Birch	2"-2 1/2" Cal.	B&B	Single leader, Specimen
6	BP-2	Betula populifolia "White Spire'	White Spire Gray Birch	2 1/2"-3" Cal.	B&B	Single leader, Specimen
12	BP-3	Betula populifolia "White Spire'	White Spire Gray Birch	3"-3 1/2" Cal.	B&B	Single leader, Specimen
3	BP-4	Betula populifolia "White Spire'	White Spire Gray Birch	3 1/2" -4" Cal.	B&B	Single leader, Specimen
13	BPM-2	Betula populifolia "White Spire'	White Spire Gray Birch	8'- 10' Ht.	B&B	Multistem, Clump, Specimen
14	BPM-3	Betula populifolia "White Spire'	White Spire Gray Birch	10'-12' Ht.	B&B	Multistem, Clump, Specimen
6	BPM-4	Betula populifolia "White Spire'	White Spire Gray Birch	12'-14' Ht.	B&B	Multistem, Clump, Specimen
4	QR1	Quercus rubra	Red Oak	2"-2 1/2": Cal.	B&B	Single leader, Specimen
EVERGREEN TREES						
3	AB1	Abies balsamea	Balsam Fir	5'-6' Ht.	B&B	Full
12	AB1	Abies balsamea	Balsam Fir	6'-8' Ht.	B&B	Full
3	AB2	Abies balsamea	Balsam Fir	8'-10' Ht.	B&B	Full
3	PG0	Picea glauca	White Spruce	5'-6'Ht.	B&B	Full
4	PG1	Picea glauca	White Spruce	6'-8' Ht.	B&B	Full
13	PG2	Picea glauca	White Spruce	8'-10' Ht.	B&B	Full
21	PG3	Picea glauca	White Spruce	10'-12' Ht.	B&B	Full
8	PR1	Pinus rigida	Pitch Pine	6'-8' Ht.	B&B	Full
4	PS1	Pinus strobus	Eastern White Pine	6'-8' Ht.	B&B	Full Non-Sheared
15	PS2	Pinus strobus	Eastern White Pine	8'-10' Ht.	B&B	Full Non-Sheared
4	PS3	Pinus strobus	Eastern White Pine	10'-12' Ht.	B&B	Full Non-Sheared

0 50 100 150
Scale:1" = 50'

PROJECT KEY PLAN

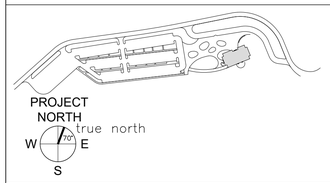

AECOM
1 FEDERAL STREET, 8TH FLOOR
BOSTON, MA 02110
617.723.1700
www.aecom.com

STATE OF MAINE
DEPARTMENT OF TRANSPORTATION

	DATE

FED PIN NO: NA
WIN NO: 017163.02 & 017163.03

REGISTERED LANDSCAPE ARCHITECT
SAMUEL R. COPLON
No. 100
STATE OF MAINE

SIGNATURE
ARCH. LIN. NUMBER
DATE JANUARY 17, 2022

PROJECT INFORMATION

PROGRAM	–
PROJECT MANAGER	–
DESIGNER	AECOM
CONSULTANT	–
PROJECT RESIDENT	–
CONTRACTOR	–
PROJECT COMPLETION DATE	–

MAINE DEPARTMENT OF TRANSPORTATION
ACADIA GATEWAY FACILITY
INTERMODAL AND WELCOME CENTER

SITE TREE PLANTING PLAN

SHEET NUMBER
L202

C:\Users\Sam\AppData\Local\Temp\AcPublish_2948\AGC Planting.dwg Jan 25, 2022 - 3:56pm

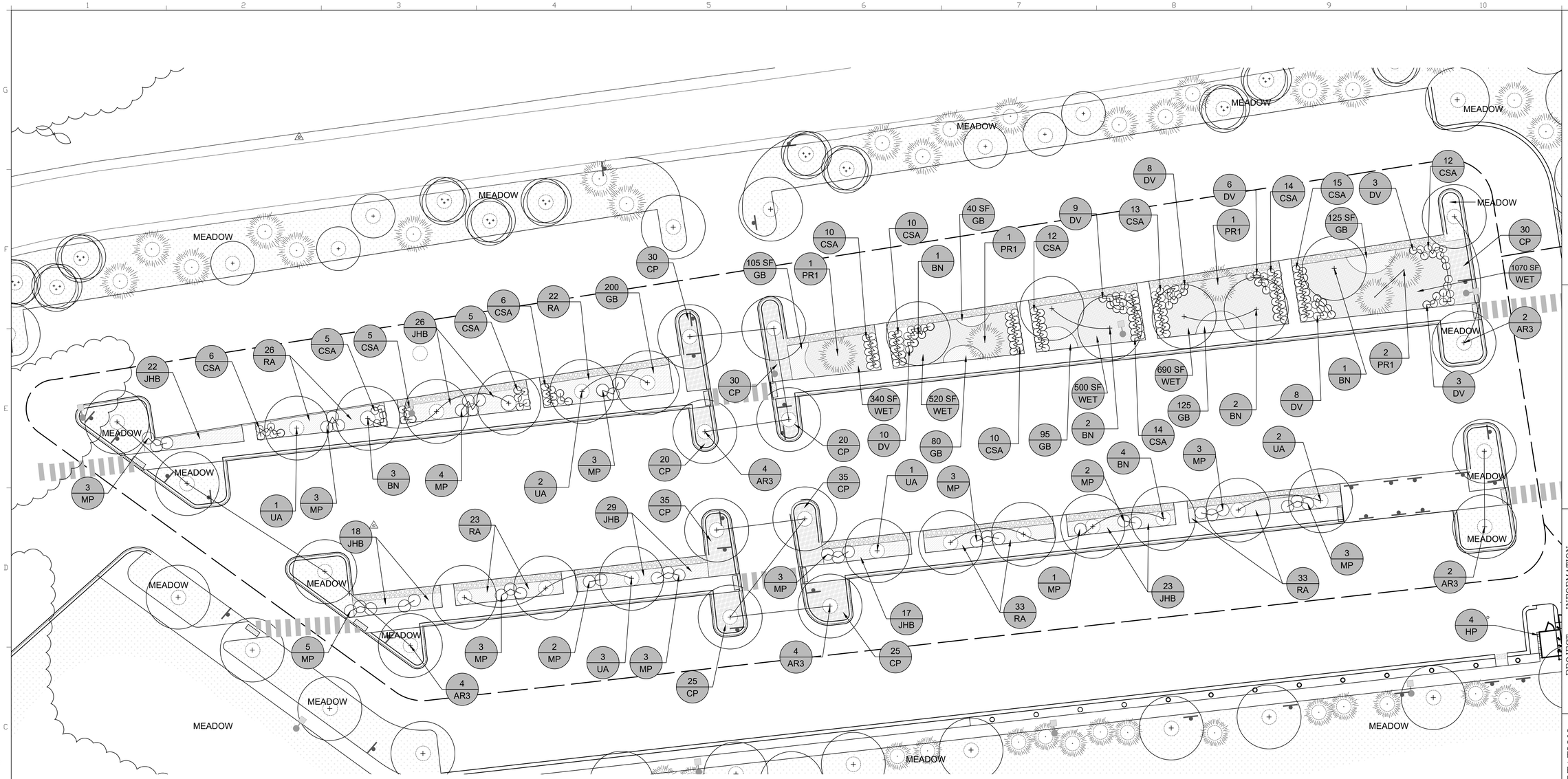

NOTES:
1) FOR TOPSOIL DEPTHS SEE SHEET L201
2) FOR PLANTING NOTES, DETAILS, & MASTER PLANT LIST SEE SHEET L206
3) ALL SEEDED AREAS TO BE SPECIFIED MEADOW MIX UNLESS OTHERWISE NOTED.

ALL LANDSCAPE WORK SHOWN IS PER PAY ITEM
REFER TO MASTER PLANT LIST SHEET L206
AND SPECIFICATIONS FOR PAY ITEM REFERENCE

PARKING LOT PLANT SCHEDULE SHEET L203						
QTY	SYM	BOTANICAL NAME	COMMON NAME	SIZE	ROOT	REMARKS
DECIDUOUS TREES						
16	AR3	Acer rubrum 'Red Sunset'	Red Sunset Red Maple	3"-3 1/2" Cal.	B&B	Single leader, Specimen
14	BN	Betula nigra 'Dura Heat'	Dura Heat River Birch	14'-16' Ht.	B&B	Single, Specimen
9	UA	Ulmus 'Morton Glossy'	Triumph Elm	2"-2 1/2: Cal	B&B	Single leader, Specimen
EVERGREEN TREES						
4	PR1	Pinus rigida	Pitch Pine	6'-8' Ht.	B&B	Full Non-Sheared
SHRUBS						
250	CP	Comptonia peregrina	Sweetfern	#2	Container	Full, Nursery Grown 36" O.C.
137	CSA	Cornus serica 'Alman's Compact'	Alman's Compact Dogwood	#3	Container	Full
47	DV	Diervilla lonicera	Dwarf Bush-Honeysuckle	#3	Container	Full
135	JHB	Juniperus horizontalis 'Bar Harbor'	Bar Harbor Juniper	#3 15-18" Sp.	Container	Full
41	MP	Myrica pensylvanica	Northern Bayberry	#3 2-3'	Container	Full
137	RA	Rhus aromatica 'Grow Low'	Grow Low Sumac	#2	Container	Full, Nursery Grown 36" O.C.
PERENNIALS, GROUNDCOVERS, & GRASSES						
770	GB	Gaylussacia baccata	Huckleberry		Sod	Full, Weed Free
3120 SF	WET	Wetland Seed Mix			Hydroseed	Weed Seed Free

ALL LANDSCAPE WORK SHOWN IS LUMP SUM

0 20 40 60
Scale:1" = 20'

PROJECT KEY PLAN

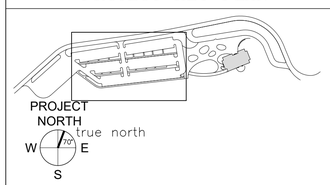

AECOM
1 FEDERAL STREET, 8TH FLOOR
BOSTON, MA 02110
617.723.1700
www.aecom.com

STATE OF MAINE
DEPARTMENT OF TRANSPORTATION

DATE

FED PIN NO: NA
WIN NO: 017163.02 & 017163.03

REGISTERED LANDSCAPE ARCHITECT
SAMUEL R. COPLON
No. 100
STATE OF MAINE

SIGNATURE
ARCH. LIN. NUMBER
DATE JANUARY 17, 2022

INFORMATION

PROJECT	
PROGRAM	–
PROJECT MANAGER	–
DESIGNER	AECOM
CONSULTANT	–
PROJECT RESIDENT	–
CONTRACTOR	–
PROJECT COMPLETION DATE	–

MAINE DEPARTMENT OF TRANSPORTATION
ACADIA GATEWAY FACILITY
INTERMODAL AND WELCOME CENTER

PARKING LOT
PLANTING PLAN

SHEET NUMBER
L203

C:\Users\Sam\AppData\Local\Temp\AcPublish_2948\AGC Planting.dwg Jan 25, 2022 - 3:56pm

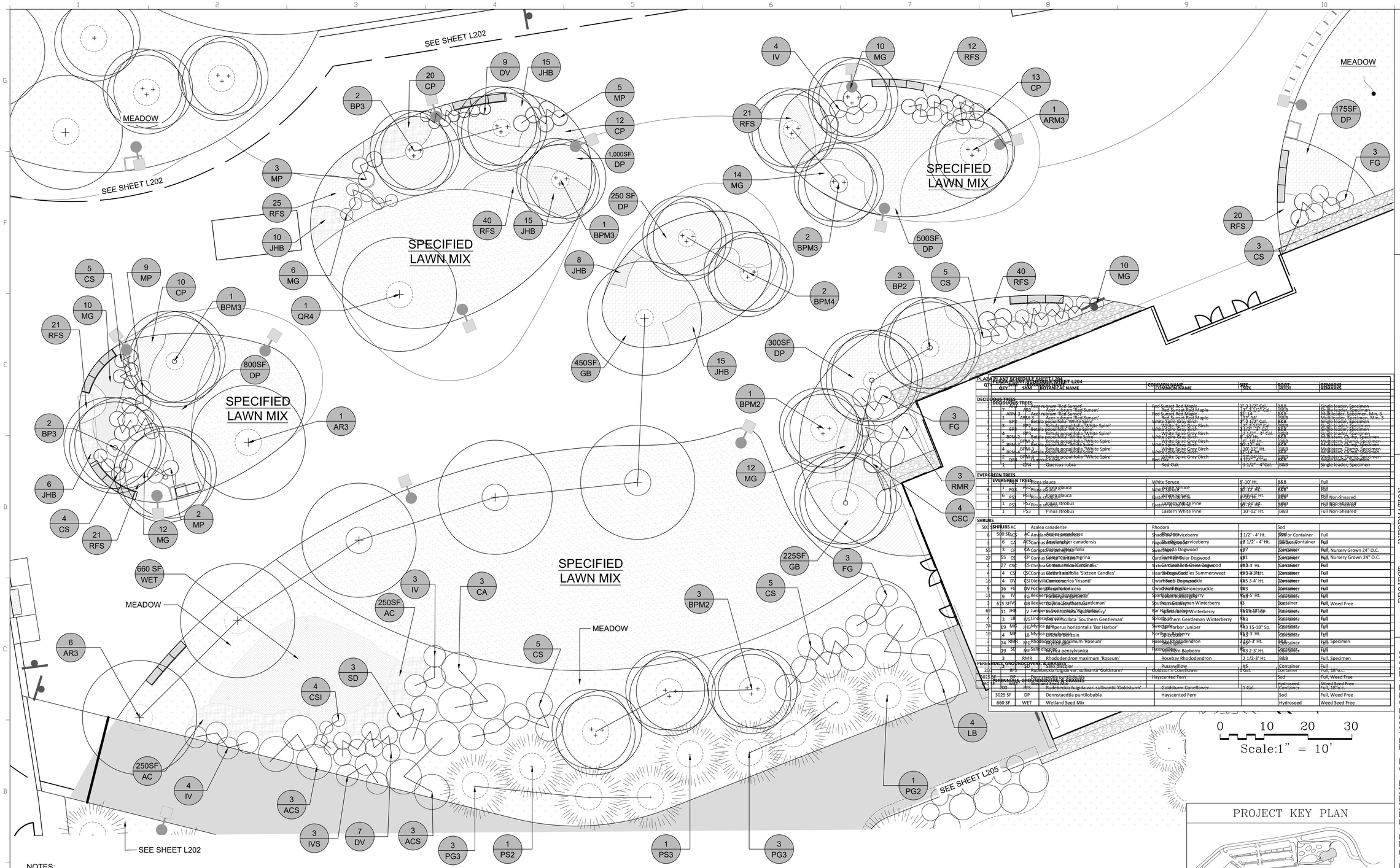

PLAZA PLANT SCHEDULE SHEET L204							
QTY		SYM	COMMON NAME / BOTANICAL NAME		SIZE	ROOT	REMARKS
DECIDUOUS TREES							
	DECIDUOUS TREES						
	7	AR4	Acer rubrum 'Red Sunset'	Red Sunset Red Maple	3"-3 1/2" Cal.	B&B	Single leader, Specimen
	7	ARM	Acer rubrum 'Red Sunset'	Red Sunset Red Maple	3"-3 1/2" Cal.	B&B	Multi-leader, Specimen, Min. 3
	1	ARM3	Acer rubrum 'Red Sunset'	Red Sunset Red Maple	11'-14'	B&B	Multi-leader, Specimen, Min. 3
	3	BP3	Betula populifolia 'White Spire'	White Spire Gray Birch	2"-2 1/2" Cal.	B&B	Single leader, Specimen
	3	BP2	Betula populifolia 'White Spire'	White Spire Gray Birch	2 1/2"-3" Cal.	B&B	Single leader, Specimen
	4	BP3	Betula populifolia 'White Spire'	White Spire Gray Birch	12'-14'	B&B	Single leader, Specimen
	5	BPM	Betula populifolia 'White Spire'	White Spire Gray Birch	8'-10' Ht.	B&B	Multistem, Clump, Specimen
	5	BPM2	Betula populifolia 'White Spire'	White Spire Gray Birch	10'-12' Ht.	B&B	Multistem, Clump, Specimen
	3	BPM3	Betula populifolia 'White Spire'	White Spire Gray Birch	10'-12' Ht.	B&B	Multistem, Clump, Specimen
	4	BPM4	Betula populifolia 'White Spire'	White Spire Gray Birch	12'-14' Ht.	B&B	Multistem, Clump, Specimen
	1	CP	Carpinus caroliniana	American Hornbeam	12'-14' Ht.	B&B	Multi-leader, Specimen
	2	QBR	Quercus bicolor	Swamp White Oak	3"-3 1/2" Cal.	B&B	Single leader, Specimen
	1	QR4	Quercus rubra	Red Oak	3 1/2"-4"Cal.	B&B	Single leader, Specimen
EVERGREEN TREES							
	EVERGREEN TREES						
	1	PG3	Picea glauca	White Spruce	8'-10' Ht.	B&B	Full
	6	PS2	Picea glauca	White Spruce	10'-12' Ht.	B&B	Full
	1	PS3	Picea glauca	White Spruce	10'-12' Ht.	B&B	Full
	6	PS2	Pinus strobus	Eastern White Pine	10'-12' Ht.	B&B	Full Non-Sheared
	1	PS3	Pinus strobus	Eastern White Pine	10'-12' Ht.	B&B	Full Non-Sheared
	1	PS3	Pinus strobus	Eastern White Pine	10'-12' Ht.	B&B	Full Non-Sheared
SHRUBS							
500	SHRUBS	AC	Azalea canadense	Rhodora		Sod	
6	500 SF	ACS	Amelanchier canadensis	Shadblow Serviceberry	3 1/2' - 4' Ht.	Sod or Container	Full
	6	CA	Cornus amomum	Silky Dogwood	3 1/2' - 4' Ht.	Sod or Container	Full
55	3	CS	Comptonia peregrina	Sweet Fern	#7	Container	Full, Nursery Grown 24" O.C.
27	55	CS	Cornus sericea	Red Osier Dogwood	#7	Container	Full, Nursery Grown 24" O.C.
	27	CSC	Cornus sericea 'Cardinal'	Cardinal Red Osier Dogwood	#3 3' Ht.	Container	Full
	4	CSI	Clethra alnifolia 'Sixteen Candles'	Sixteen Candles Summersweet	#3 2-3' Ht.	Container	Full
19	4	DV	Diervilla lonicera 'Insanti'	Dwarf Bush Honeysuckle	#3 3-4' Ht.	Container	Full
9	16	FG	Fothergilla gardenii	Dwarf Witch Alder	#3	Container	Full
11	9	IV	Ilex verticillata 'Winter Red'	Winterberry	#3 4-5' Ht.	Container	Full
3	675 SF	IVS	Ilex verticillata 'Southern Gentleman'	Southern Gentleman Winterberry	#3	Container	Full, Weed Free
69	11	JHB	Ilex verticillata 'Southern Gentleman'	Bar Harbor Winterberry	#3 15-18" Sp.	Container	Full
4	3	LB	Lindera benzoin	Spicebush	#3	Container	Full
78	69	MG	Myrica gale	Sweet Gale	#3 15-18" Sp.	Container	Full
19	4	MP	Myrica pensylvanica	Northern Bayberry	#3 2-3' Ht.	Container	Full
3	74	RMR	Rhododendron maximum 'Roseum'	Rosebay Rhododendron	2 1/2'-3' Ht.	B&B	Full, Specimen
3	19	SD	Salix discolor	Pussywillow	#3 2-3' Ht.	Container	Full
	3	RMR	Rhododendron maximum 'Roseum'	Rosebay Rhododendron	2 1/2-3' Ht.	B&B	Full, Specimen
	19	SD	Salix discolor	Pussywillow	#5	Container	Full
PERENNIALS, GROUNDCOVERS, & GRASSES							
222	222	RFS	Rudbeckia fulgida var. sullivantii 'Goldsturm'	Goldsturm Coneflower	2 Gal.	Container	Full, 18" o.c.
1025 SF	3025 SF	DP	Dennstaedtia punctilobula	Hayscented Fern		Sod	Full, Weed Free
660 SF	660 SF	WET	Wetland Seed Mix			Hydroseed	Weed Seed Free
PERENNIALS, GROUNDCOVERS, & GRASSES							
	300	RFS	Rudbeckia fulgida var. sullivantii 'Goldsturm'	Goldsturm Coneflower	1 Gal.	Container	Full, 18" o.c.
	3025 SF	DP	Dennstaedtia punctilobula	Hayscented Fern		Sod	Full, Weed Free
	660 SF	WET	Wetland Seed Mix			Hydroseed	Weed Seed Free

0 10 20 30
Scale:1" = 10'

NOTES:
1) FOR TOPSOIL DEPTHS SEE SHEET L201
2) FOR PLANTING NOTES, DETAILS, & MASTER PLANT LIST SEE SHEET L206
3) ALL SEEDED AREAS TO BE SPECIFIED MEADOW MIX UNLESS OTHERWISE NOTED.

ALL LANDSCAPE WORK SHOWN IS PER PAY ITEM
REFER TO MASTER PLANT LIST SHEET L206
AND SPECIFICATIONS FOR PAY ITEM REFERENCE

ALL LANDSCAPE WORK SHOWN IS LUMP SUM

PROJECT KEY PLAN

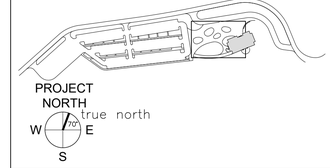

AECOM
1 FEDERAL STREET, 8TH FLOOR
BOSTON, MA 02110
617.723.1700
www.aecom.com

STATE OF MAINE
DEPARTMENT OF TRANSPORTATION

DATE

FED PIN NO: NA
WIN NO: 017163.02 & 017163.03

REGISTERED LANDSCAPE ARCHITECT
SAMUEL R. COPLON
No. 100
STATE OF MAINE

INFORMATION		DATE
PROJECT PROGRAM	—	—
PROJECT MANAGER	—	—
DESIGNER	AECOM	—
CONSULTANT	—	—
PROJECT RESIDENT	—	—
CONTRACTOR	—	—
PROJECT COMPLETION DATE	—	—

SIGNATURE —
ARCH. LIN. NUMBER —
DATE JANUARY 17, 2022

MAINE DEPARTMENT OF TRANSPORTATION
ACADIA GATEWAY FACILITY
INTERMODAL AND WELCOME CENTER

PLAZA PLANTING PLAN

SHEET NUMBER
L204

C:\Users\Sam\AppData\Local\Temp\AcPublish_2948\AGC Planting.dwg Jan 25, 2022 - 3:56pm

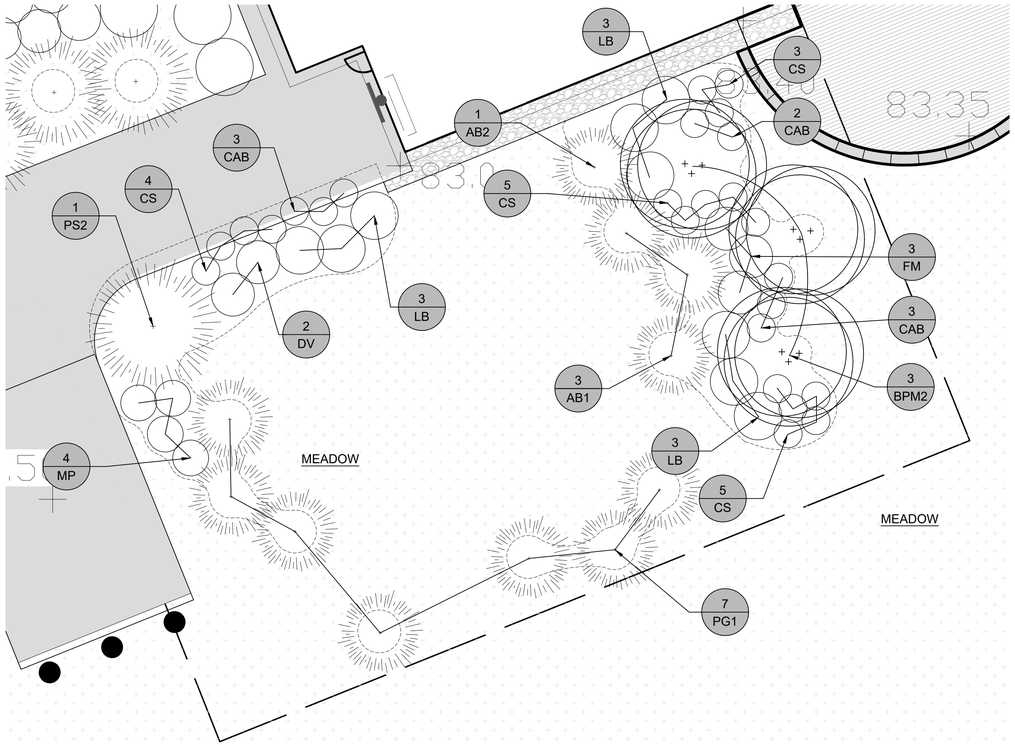

1 Utility Screen Planting Enlargement

1" = 10'-0"

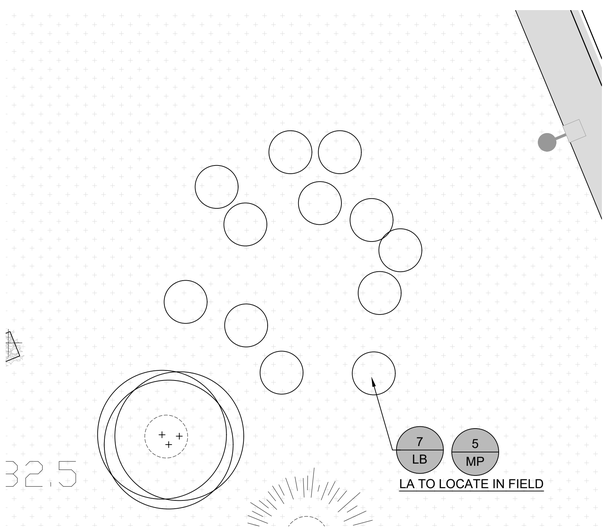

2 Well Vault Screen Planting Enlargement

1" = 10'-0"

ENLARGEMENTS PLANT SCHEDULE SHEET 205						
QTY	SYM	BOTANICAL NAME	COMMON NAME	SIZE	ROOT	REMARKS
DECIDUOUS TREES						
3	BPM-2	Betula populifolia "White Spire'	White Spire Gray Birch	8' - 10' Ht.	B&B	Multistem, Clump, Specimen
EVERGREEN TREES						
3	AB1	Abies balsamea	Balsam Fir	6'-8' Ht.	B&B	Full
1	AB2	Abies balsamea	Balsam Fir	8'-10' Ht.	B&B	Full
7	PG1	Picea glauca	White Spruce	6'-8' Ht.	B&B	Full
1	PS2	Pinus strobus	Eastern White Pine	8'-10' Ht.	B&B	Full Non-Sheared
SHRUBS						
8	CAB	Cornus alba 'Bud's Yellow'	Yellow Dogwood	#2	Container	Full
17	CS	Cornus serica 'Cardinal'	Cardinal Red-Osier Dogwood	#3	Container	Full
2	DV	Diervilla lonicera	Dwarf Bush-Honeysuckle	#3	Container	Full
3	FM	Fothergilla major 'Mount Airy'	Mount Airy Fothergilla	#2	Container	Full
9	LB	Lindera benzoin	Spicebush	#3	Container	Full
4	MP	Myrica pensylvanica	Northern Bayberry	#3 2-3'	Container	Full

NOTES:
1) FOR TOPSOIL DEPTHS SEE SHEET L201
2) FOR PLANTING NOTES, DETAILS, & MASTER PLANT LIST SEE SHEET L206
3) ALL SEEDED AREAS TO BE SPECIFIED MEADOW MIX UNLESS OTHERWISE NOTED.

ALL LANDSCAPE WORK SHOWN IS PER PAY ITEM
REFER TO MASTER PLANT LIST SHEET L206
AND SPECIFICATIONS FOR PAY ITEM REFERENCE

ALL LANDSCAPE WORK SHOWN IS LUMP SUM

0 10 20 30
Scale:1" = 10'

PROJECT KEY PLAN

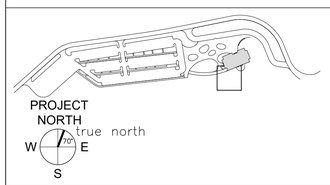

AECOM
1 FEDERAL STREET, 8TH FLOOR
BOSTON, MA 02110
617.723.1700
www.aecom.com

STATE OF MAINE
DEPARTMENT OF TRANSPORTATION

DATE

FED PIN NO: NA
WIN NO: 017163.02 & 017163.03

REGISTERED LANDSCAPE ARCHITECT
SAMUEL R. COPLON
No. 100
STATE OF MAINE

SIGNATURE –
ARCH. LIN. NUMBER –
DATE JANUARY 17, 2022

PROJECT INFORMATION

PROGRAM	–
PROJECT MANAGER	–
DESIGNER	AECOM
CONSULTANT	–
PROJECT RESIDENT	–
CONTRACTOR	–
PROJECT COMPLETION DATE	–

MAINE DEPARTMENT OF TRANSPORTATION
ACADIA GATEWAY FACILITY
INTERMODAL AND WELCOME CENTER

PLANTING ENLARGEMENTS

SHEET NUMBER
L205

C:\Users\Sam\AppData\Local\Temp\AcPublish_2948\AGC Planting.dwg Jan 25, 2022 - 3:57pm

NOTES:
1) STAKING AT CONTRACTOR'S DISCRETION
2) ON TREES BELOW 3" CAL. USE WOOD STAKES
3) ON TREES 4" CAL. OR GREATER USE GUYING CABLES
4) IF GUYING CABLES USE 3 PER TREE MIN. AS NEEDED
5) FOR PRUNING, SEE SPECIFICATIONS
6) REMOVE ALL OF WIRE BASKETS ON ROOTBALL, TYP.

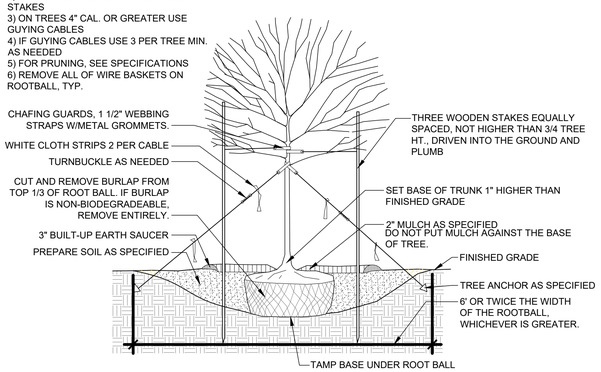

1 Tree Planting
Scale: NA

NOTES:
1) STAKING AT CONTRACTOR'S DISCRETION
2) IF GUYING CABLES USE 3 PER TREE MIN. AS NEEDED
3) FOR PRUNING, SEE SPECIFICATIONS
4) REMOVE ALL OF WIRE BASKETS ON ROOTBALL, TYP.

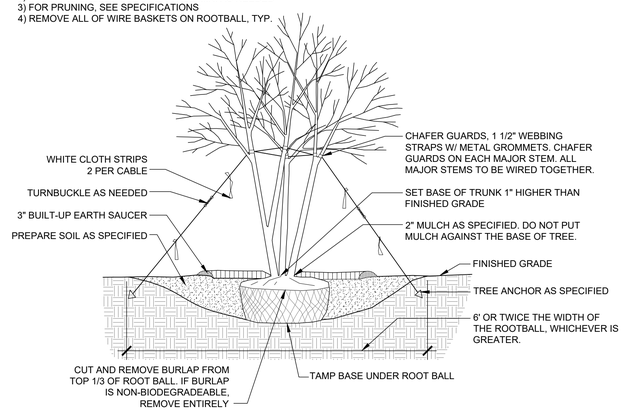

2 Multi Stem Tree Planting
Scale: NA

NOTES:
1) STAKING AT CONTRACTOR'S DISCRETION
2) REMOVE ALL OF WIRE BASKETS ON ROOTBALL, TYP.

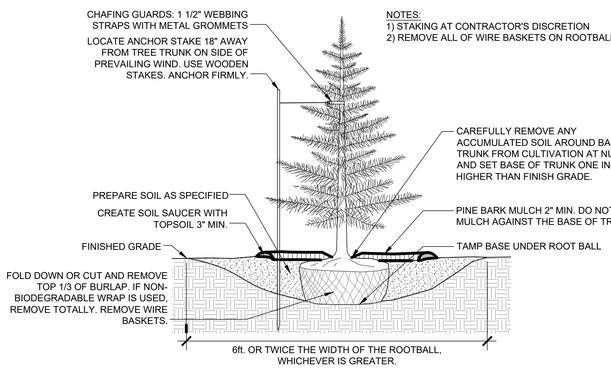

3 Evergreen Tree Planting
Scale: NA

NOTES:
1) FOR PRUNING, SEE SPECIFICATIONS

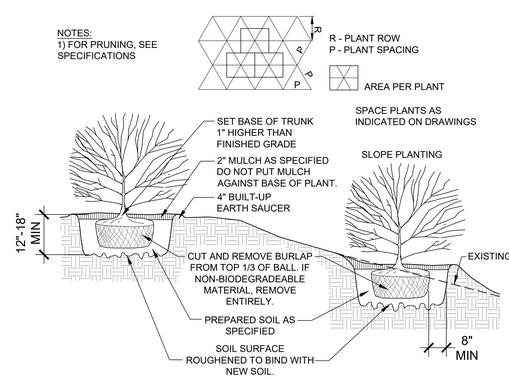

4 Shrub Planting
Scale: NA

Pay Item	QTY	SYM	BOTANICAL NAME	COMMON NAME	SIZE	ROOT	REMARKS
MASTER PLANT SCHEDULE							
621.273	20	AR1	Acer rubrum 'Red Sunset'	Red Sunset Red Maple	2"-2 1/2" Cal.	B&B	Single leader, Specimen
621.285	23	AR3	Acer rubrum 'Red Sunset'	Red Sunset Red Maple	3"-3 1/2" Cal.	B&B	Single leader, Specimen
621.263	16	ARM-3	Acer rubrum 'Red Sunset'	Red Sunset Red Maple	10'-12'	B&B	Multileader, Specimen. Min. 3
621.263	1	ARM-4	Acer rubrum 'Red Sunset'	Red Sunset Red Maple	12'-14'	B&B	Multileader, Specimen. Min. 3
621.554	5	AG	Amelanchier grandiflora 'Robin Hill'	Robin Hill Serviceberry	2"-2.5" Cal.	B&B	Multistem, Clump Specimen
621.201	10	BP-1	Betula populifolia "White Spire'	White Spire Gray Birch	2"-2 1/2" Cal.	B&B	Single leader, Specimen
621.204	9	BP-2	Betula populifolia "White Spire'	White Spire Gray Birch	2 1/2"-3" Cal.	B&B	Single leader, Specimen
621.205	16	BP-3	Betula populifolia "White Spire'	White Spire Gray Birch	3"-3 1/2" Cal.	B&B	Single leader, Specimen
621.206	3	BP-4	Betula populifolia "White Spire'	White Spire Gray Birch	3 1/2" -4" Cal.	B&B	Single leader, Specimen
621.186	21	BPM-2	Betula populifolia "White Spire'	White Spire Gray Birch	8' - 10' Ht.	B&B	Multistem, Clump, Specimen
621.264	18	BPM-3	Betula populifolia "White Spire'	White Spire Gray Birch	10'-12' Ht.	B&B	Multistem, Clump, Specimen
621.264	8	BPM-4	Betula populifolia "White Spire'	White Spire Gray Birch	12'-14' Ht.	B&B	Multistem, Clump, Specimen
621.281	4	QR1	Quercus rubra	Red Oak	2"-2 1/2": Cal.	B&B	Single leader, Specimen
621.292	1	QR4	Quercus rubra	Red Oak	3 1/2" - 4"Cal.	B&B	Single leader, Specimen
261.264	14	BN	Betula nigra 'Dura Heat'	Dura Heat River Birch	14'-16' Ht.	B&B	Single, Specimen
621.274	9	UA	Ulmus 'Morton Glossy'	Triumph Elm	2"-2 1/2: Cal	B&B	Single leader, Specimen
	EVERGREEN TREES						
621.037	3	AB0	Abies balsamea	Balsam Fir	5'-6' Ht.	B&B	Full
621.044	12	AB1	Abies balsamea	Balsam Fir	6'-8' Ht.	B&B	Full
621.148	4	AB2	Abies balsamea	Balsam Fir	8'-10' Ht.	B&B	Full
621.037	3	PG0	Picea glauca	White Spruce	5'-6'Ht.	B&B	Full
621.044	11	PG1	Picea glauca	White Spruce	6'-8' Ht.	B&B	Full
621.048	14	PG2	Picea glauca	White Spruce	8'-10' Ht.	B&B	Full
621.052	27	PG3	Picea glauca	White Spruce	10'-12' Ht.	B&B	Full
621.044	16	PR1	Pinus rigida	Pitch Pine	6'-8' Ht.	B&B	Full
621.044	4	PS1	Pinus strobus	Eastern White Pine	6'-8' Ht.	B&B	Full Non-Sheared
621.048	15	PS2	Pinus strobus	Eastern White Pine	8'-10' Ht.	B&B	Full Non-Sheared
621.052	5	PS3	Pinus strobus	Eastern White Pine	10'-12' Ht.	B&B	Full Non-Sheared
	SHRUBS						
616.30	500 SF	AC	Azalea canadense	Rhodora		Sod	
621.559	6	ACS	Amelanchier canadensis	Shadblow Serviceberry	3 1/2' - 4' Ht.	B&B or Container	Full
621.122	3	CA	Cornus alternifolia	Pagoda Dogwood	#7	Container	Full
621.546	305	CP	Comptonia peregrina	Sweetfern	#2	Container	Full, Nursery Grown 24" O.C.
621.547	44	CS	Cornus serica 'Cardinal'	Cardinal Red-Osier Dogwood	#3	Container	Full
621.547	137	CSA	Cornus serica 'Alman's Compact'	Alman's Compact Dogwood	#3	Container	Full
621.548	4	CSC	Clethra alnifolia 'Sixteen Candles'	Sixteen Candles Summersweet	#5 2-3' Ht.	Container	Full
621.546	8	CAB	Cornus alba 'Bud's Yellow'	Yellow Dogwood	#2	Container	Full
621.554	4	CSI	Cornus serica 'Insanti'	Insanti Dogwood	#5 3-4' Ht.	Container	Full
621.547	65	DV	Diervilla lonicera	Dwarf Bush-Honeysuckle	#3	Container	Full
621.544	9	FG	Fothergilla gardenii	Dwarf Fothergilla	#5	Container	Full
621.542	3	FM	Fothergilla major 'Mount Airy'	Mount Airy Fothergilla	#2	Container	Full
616.100	1445 SF	GB	Gaylussacia baccata	Huckleberry		Sod	Full, Weed Free
621.558	11	IV	Ilex verticillata 'Sparkleberry'	Sparkleberry Winterberry	#5 4-5' Ht.	Container	Full
621.547	3	IVS	Ilex verticillata 'Southern Gentleman'	Southern Gentleman Winterberry	#3	Container	Full
621.391	204	JHB	Juniperus horizontalis 'Bar Harbor'	Bar Harbor Juniper	#3 15-18" Sp.	Container	Full
621.547	13	LB	Lindera benzoin	Spicebush	#3	Container	Full
621.547	115	MG	Myrica gale	Sweetgale	#3	Container	Full
621.525	23	MP	Myrica pensylvanica	Northern Bayberry	#3 2-3' Ht.	Container	Full
621.50	3	RMR	Rhododendron maximum 'Roseum'	Rosebay Rhododendron	2 1/2-3' Ht.	B&B	Full, Specimen
621.546	137	RA	Rhus aromatica 'Grow Low'	Grow Low Sumac	#2	Container	Full, Nursery Grown 36" O.C.
621.553	3	SD	Salix discolor	Pussywillow	#5	Container	Full
	PERENNIALS, GROUNDCOVERS, & GRASSES						
621.711	200	RFS	Rudebeckia fulgida var. sullivantii 'Goldsturm'	Goldsturm Coneflower	1 Gal.	Container	Full, 18"o.c.
616.200	3025 SF	DP	Dennstaedtia puntilobubla	Hayscented Fern		Sod	Full, Weed Free
618.147	3780 SF	WET	Wetland Seed Mix			Hydroseed	Weed Seed Free
618.240	201619		Meadow Mix				
618.149	6534		Lawn Seed Mix - Plaza				
621.662	4	HP	Hydrangea petiolaris	Climbing Hydrangea	#2	Container	

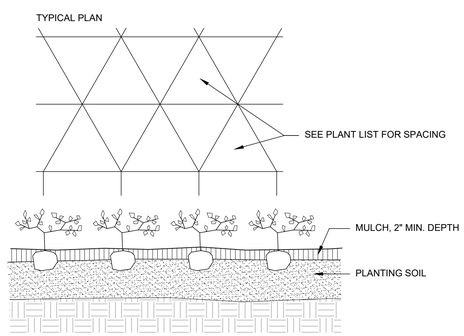

5 Groundcover Planting
Scale: NA

PLANTING NOTES

1. CONTRACTOR : VERIFY THE LOCATION OF ALL UTILITY LINES PRIOR TO PLANTING AND REPORT ANY CONFLICT TO THE OWNERS REPRESENTATIVE.

2. PLANT NO TREES OR SHRUBS BEFORE ACCEPTANCE OF ROUGH GRADING. OWNERS REPRESENTATIVE RESERVES THE RIGHT TO REJECT PLANTS PRIOR TO AND AFTER PLANTING.

3. LAWN AREAS WITHIN THE LIMIT OF WORK OR OUTSIDE THE LIMIT OF WORK WHICH ARE DISTURBED DURING CONSTRUCTION (INCLUDING PLANTING OPERATIONS) SHALL BE RETURNED TO ORIGINAL GRADE, LOAMED AND SEEDED BY THE CONTRACTOR AT NO ADDITIONAL EXPENSE TO THE OWNER.

4. CONTRACTOR TO ENSURE PLANTS SHALL BE WELL WATERED THROUGHOUT THE FIRST GROWING SEASON.

5. LOAM & SEED ALL DISTURBED AREAS NOT NOTED TO RECEIVE OTHER TREATMENT.

6. PLANT BEDS FOR SHRUB PLANTINGS SHALL BE CONTINUOUS UNLESS NOTED OTHERWISE.

7. OWNERS REPRESENTATIVE TO APPROVE PLANT MATERIALS PRIOR TO DELIVERY TO SITE AND AGAIN AT SITE PRIOR TO PLANTING.

8. NO SUBSTITUTION OF PLANT SPECIES OR VARIETIES WITHOUT OWNERS REPRESENTATIVE WRITTEN APPROVAL.

9. STAKE OUT PLANTS AND PLANT BEDS IN THEIR APPROXIMATE LOCATION. ADJUST LOCATIONS OF STAKES AS DIRECTED BY OWNERS REPRESENTATIVE TO ACCOUNT FOR UTILITIES AND OTHER FIELD CONDITIONS. OWNERS REPRESENTATIVE TO APPROVE FINAL STAKE LOCATIONS PRIOR TO PLANTING.

10. COMPLETE QUANTITIES OF PLANTS FOR EACH AREA TO BE AVAILABLE ON SITE AT THE TIME OF PLANTING FOR FIELD LAYOUT BY THE OWNERS REPRESENTATIVE. NO PARTIAL LAYOUT AND PLANTING OF AREAS WILL BE ACCEPTABLE.

11. LOOSE OR CRACKED ROOTBALLS ARE UNACCEPTABLE AND WILL BE REJECTED.

12. REMOVE TOP 2/3 OF WIRE BASKETS. REMOVE TOP 1/3 OF BURLAP. SYNTHETIC BURLAP WILL NOT BE ACCEPTED. FOR CONTAINER PLANTS, REMOVE CONTAINER AND SCARIFY EDGES OF ROOTBALL 1/2 INCH DEEP IN A MINIMUM OF FOUR LOCATIONS AND AT BOTTOM OF ROOTBALL.

13. RAISE AND REPLANT PLANT MATERIAL THAT SETTLE AFTER PLANTING AND WATERING.

14. WATER PLANTS THOROUGHLY AFTER INSTALLATION, A MINIMUM OF TWICE WITHIN THE FIRST 24 HOURS.

ALL LANDSCAPE WORK SHOWN IS LUMP SUM

PROJECT KEY PLAN

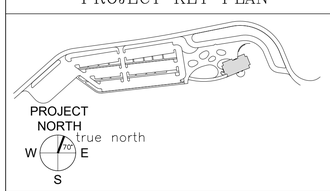

AECOM
1 FEDERAL STREET, 8TH FLOOR
BOSTON, MA 02110
617.723.1700
www.aecom.com

STATE OF MAINE
DEPARTMENT OF TRANSPORTATION

DATE

FED PIN NO: NA

WIN NO: 017163.02 & 017163.03

REGISTERED LANDSCAPE ARCHITECT
SAMUEL R. COPLON
No. 100
STATE OF MAINE

SIGNATURE

ARCH. LIN. NUMBER

DATE JANUARY 17, 2022

PROJECT INFORMATION

PROGRAM	–
PROJECT MANAGER	–
DESIGNER	AECOM
CONSULTANT	–
PROJECT RESIDENT	–
CONTRACTOR	–
PROJECT COMPLETION DATE	–

MAINE DEPARTMENT OF TRANSPORTATION
ACADIA GATEWAY FACILITY
INTERMODAL AND WELCOME CENTER

PLANTING NOTES, DETAILS & SCHEDULE

SHEET NUMBER
L206

C:\Users\Sam\AppData\Local\Temp\AcPublish_2948\AGC Planting.dwg Jan 25, 2022 - 3:57pm

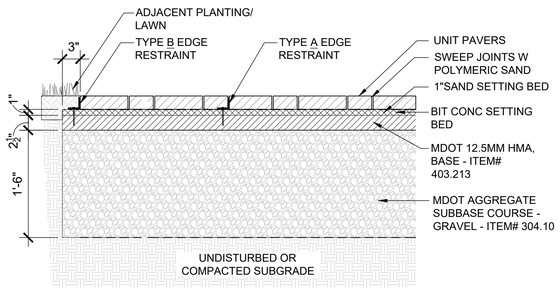

1 Unit Pavers on Bit Conc

Scale: 1" = 1'-0"

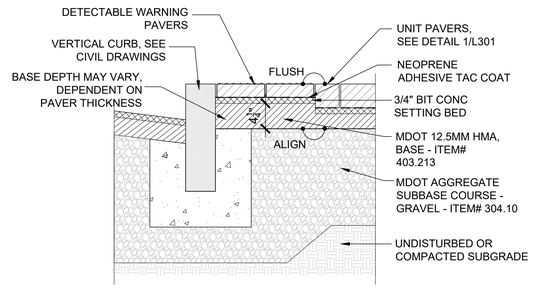

2 Detectable Warning Pavers

Scale: 1" = 1'-0"

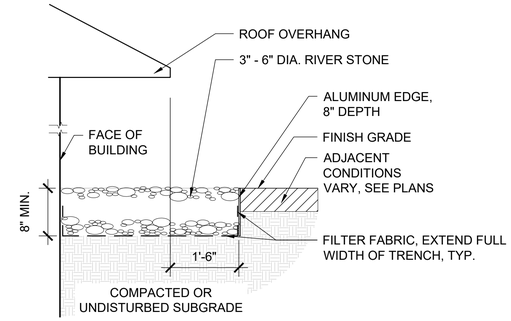

3 River Stone Drip Strip

Scale: 1" = 1'-0"

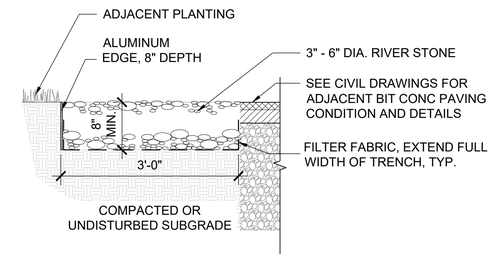

4 River Stone Edge in Parking Lot

Scale: 1" = 1'-0"

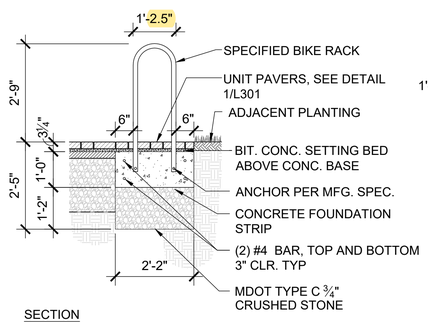

5 Bike Rack

Scale: 1/2" = 1'-0"

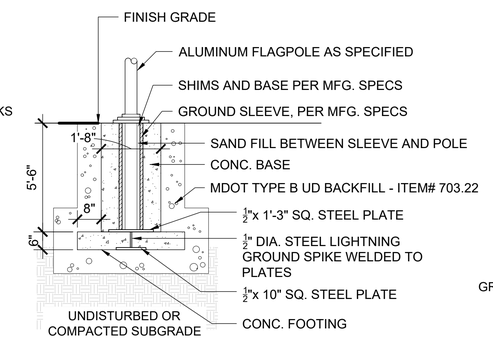

6 Flag Pole

Scale: 1/2" = 1'-0"

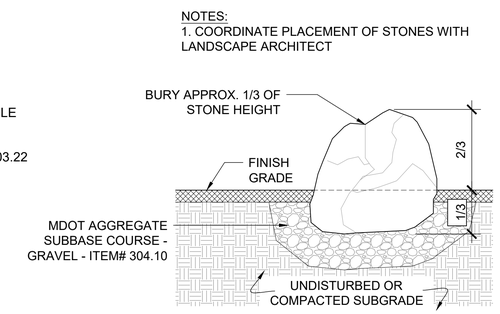

7 Boulder Setting

Scale: 1/2" = 1'-0"

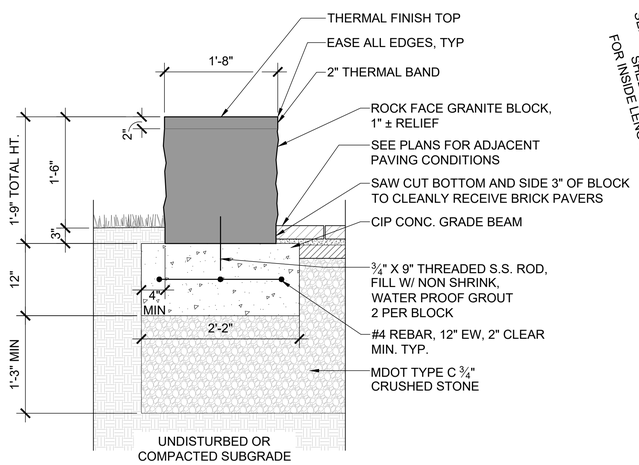

SECTION

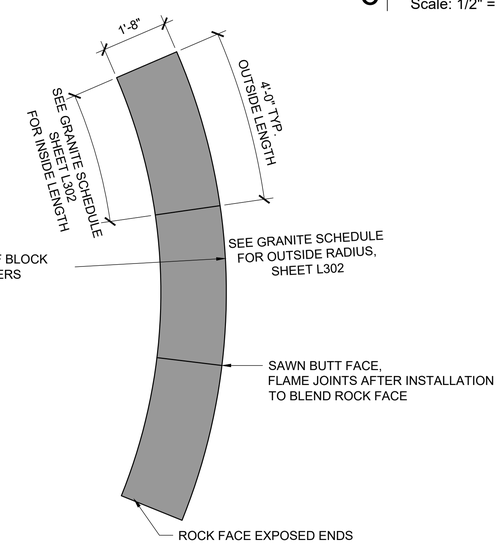

RADIAL SEAT WALL PLAN
NTS

8 Stone Seat Wall

Scale: 1" = 1'-0"

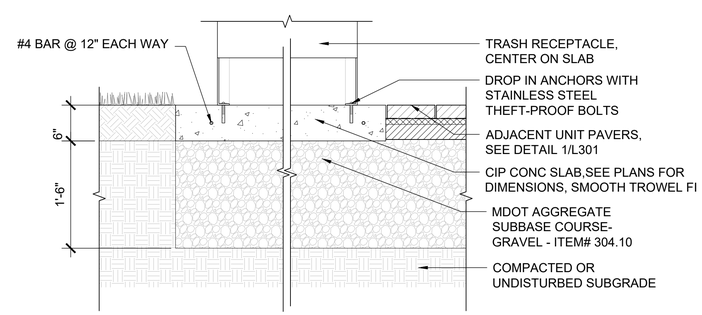

9 Trash Receptacle Footing & Concrete Pad

Scale: 1" = 1'-0"

PROJECT KEY PLAN

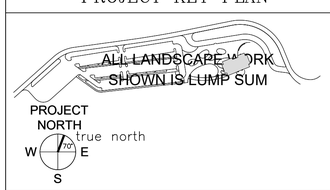

AECOM
1 FEDERAL STREET, 8TH FLOOR
BOSTON, MA 02110
617.723.1700
www.aecom.com

STATE OF MAINE
DEPARTMENT OF TRANSPORTATION

	DATE

FED PIN NO: NA
WIN NO: 017163.02 & 017163.03

REGISTERED LANDSCAPE ARCHITECT SAMUEL R. COPLON No. 100 STATE OF MAINE

SIGNATURE –
ARCH. LIN. NUMBER –
DATE JANUARY 17, 2022

PROJECT INFORMATION		DATE
PROGRAM	–	–
PROJECT MANAGER	–	–
DESIGNER	AECOM	–
CONSULTANT	–	–
PROJECT RESIDENT	–	–
CONTRACTOR	–	–
PROJECT COMPLETION DATE	–	–

MAINE DEPARTMENT OF TRANSPORTATION
ACADIA GATEWAY FACILITY
INTERMODAL AND WELCOME CENTER

SITE DETAILS

SHEET NUMBER
L301

C:\Users\Sam\AppData\Local\Temp\AcPublish_2948\AGC Details.dwg Jan 25, 2022 - 12:13pm

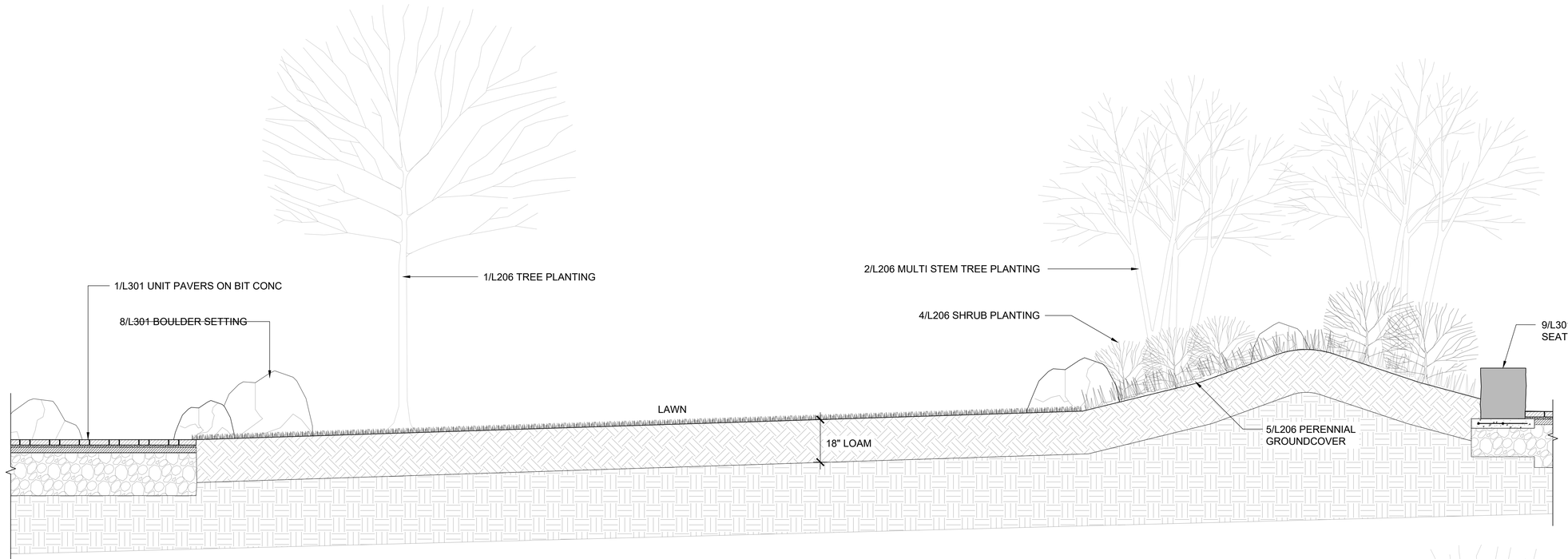

1 Section A - Planted Plaza Island

Scale: 1/2" = 1'-0"

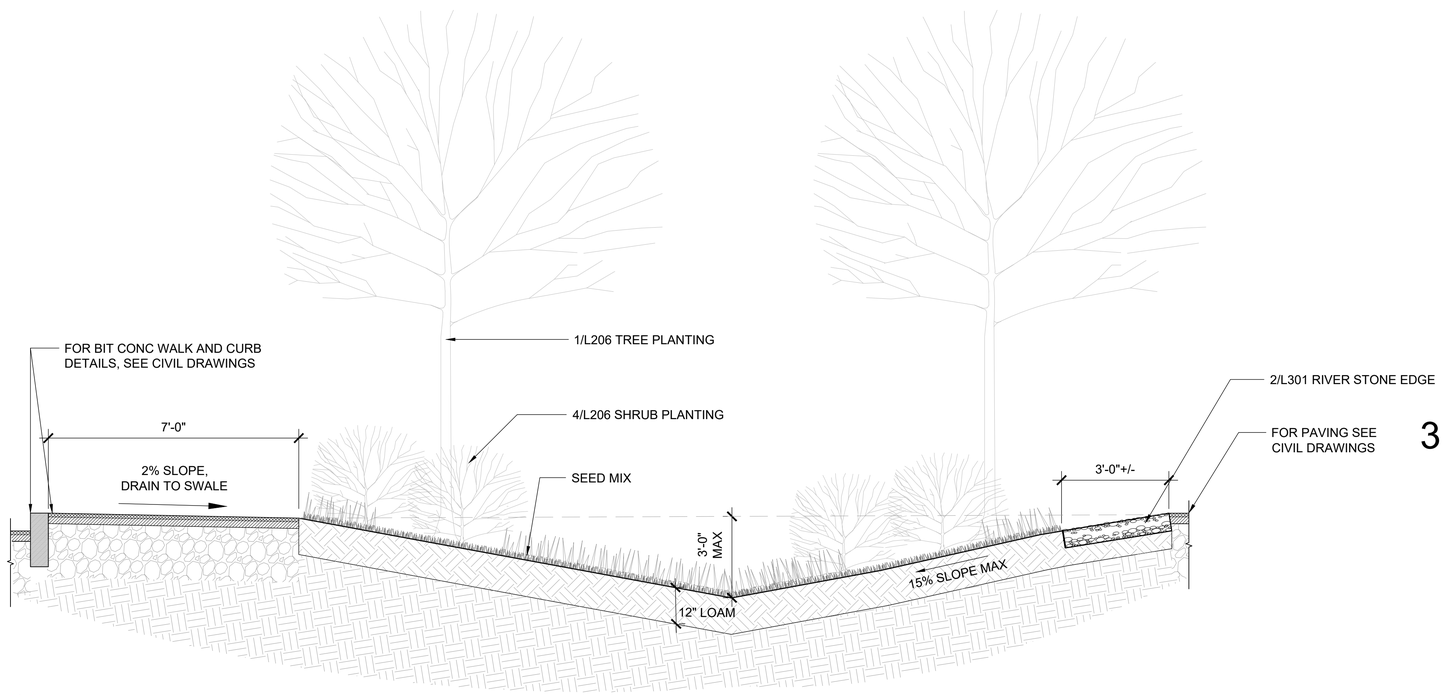

2 Section B - Parking Lot Infiltration Swale

Scale: 1/2" = 1'-0"

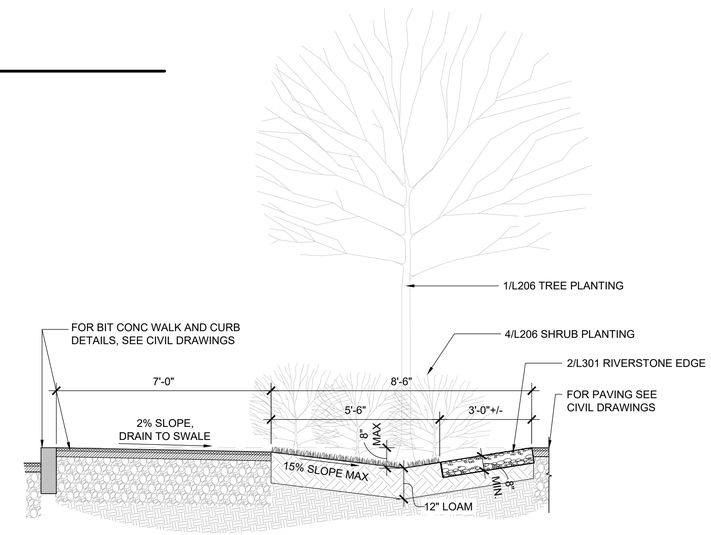

3 Section C - Planted Median Strip

NTS

ALL LANDSCAPE WORK SHOWN IS LUMP SUM

PROJECT KEY PLAN

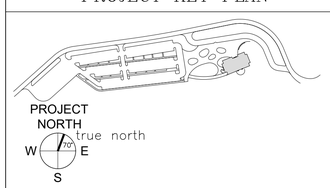

AECOM
1 FEDERAL STREET, 8TH FLOOR
BOSTON, MA 02110
617.723.1700
www.aecom.com

STATE OF MAINE
DEPARTMENT OF TRANSPORTATION

DATE

FED PIN NO: NA

WIN NO: 017163.02 & 017163.03

REGISTERED LANDSCAPE ARCHITECT SAMUEL R. COPLON No. 100 STATE OF MAINE

SIGNATURE –

ARCH. LIN. NUMBER –

DATE JANUARY 17, 2022

PROJECT INFORMATION	
PROGRAM	–
PROJECT MANAGER	–
DESIGNER	AECOM
CONSULTANT	–
PROJECT RESIDENT	–
CONTRACTOR	–
PROJECT COMPLETION DATE	–

MAINE DEPARTMENT OF TRANSPORTATION
ACADIA GATEWAY FACILITY
INTERMODAL AND WELCOME CENTER

SITE SECTIONS

SHEET NUMBER

L302

C:\Users\Sam\AppData\Local\Temp\AcPublish_2948\AGC Details.dwg Jan 25, 2022 - 12:13pm

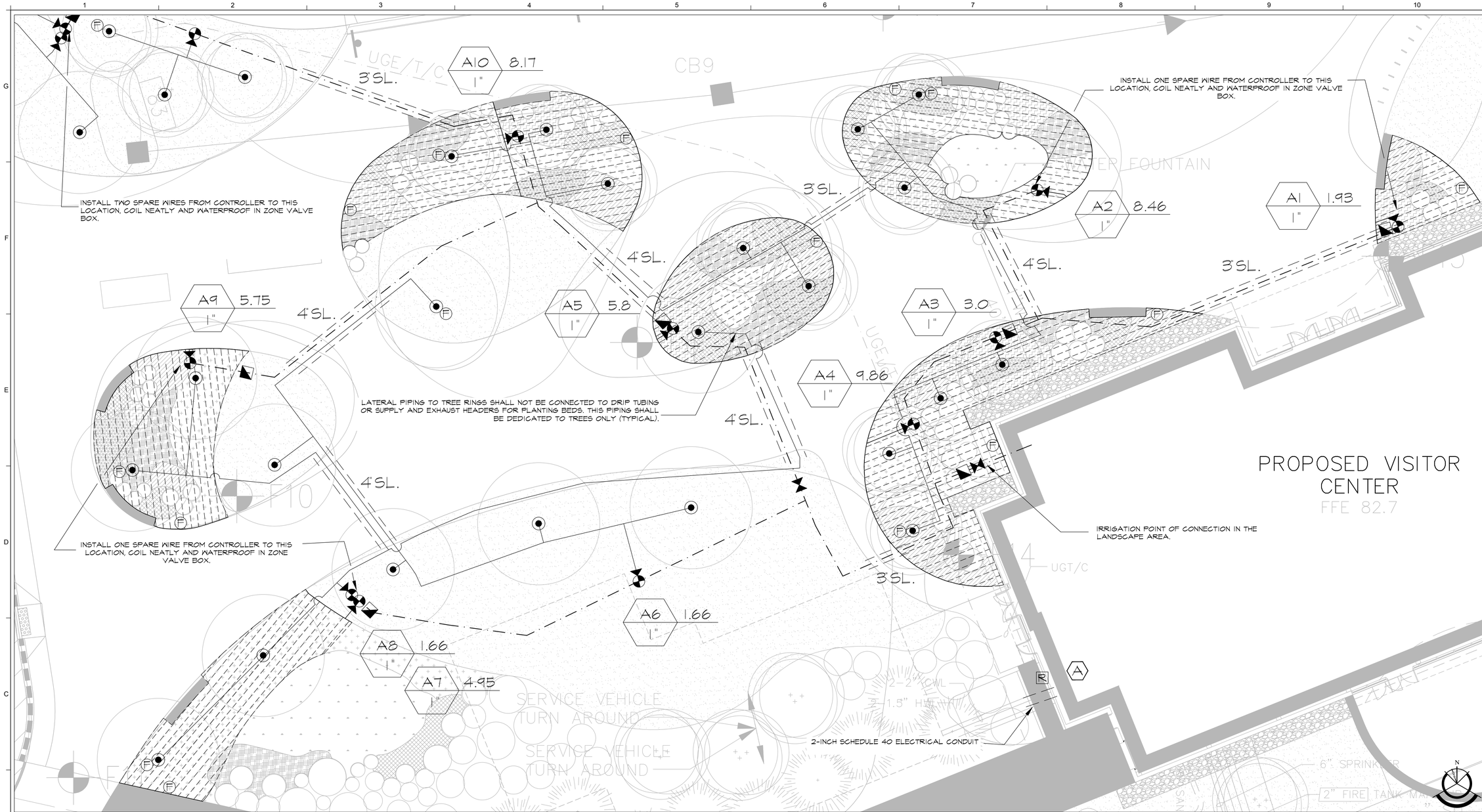

SEE I-1.02 FOR LEGEND AND NOTES

GRAPHIC SCALE
0 10 20 30
SCALE: 1" = 10'

ALL IRRIGATION WORK IS LUMP SUM

PROJECT KEY PLAN

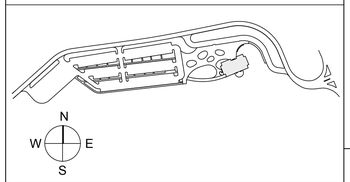

Irrigation Consulting, Inc.
Providing innovative design solutions for irrigation worldwide.
20 Morris Parkway
Nashua, NH 03062
(978) 433.8412 Fax 433.2788
BVINCHES@IRRIGATIONCONSULTING.COM
112 S. Old Statesville Rd., Suite 104
Huntersville, NC 28078
(704) 843.3688 Fax 843.3511

STACY O. GARDNER
CERTIFIED IRRIGATION DESIGNER
7002813
COMMERCIAL ★ GOLF COURSE

AECOM
AECOM TECHNICAL SERVICES, INC.
66 LONG WHARF
BOSTON, MA 02110
617.723.1700 tel 617.723.6856 fax
www.aecom.com

STATE OF MAINE
DEPARTMENT OF TRANSPORTATION

	DATE

FED PIN NO: NA
PIN NO: 017163.02 &017163.03

PROJECT INFORMATION		SIGNATURE
PROGRAM	–	–
PROJECT MANAGER	–	ARCH. LIN. NUMBER
DESIGNER	AECOM	–
CONSULTANT	COPLON ASSOCIATES	–
PROJECT RESIDENT	–	DATE
CONTRACTOR	–	January 17, 2022
PROJECT COMPLETION DATE	–	

MAINE DEPARTMENT OF TRANSPORTATION
ACADIA GATEWAY FACILITY
INTERMODAL AND WELCOME CENTER

IRRIGATION PLAN

SHEET NUMBER
I101

© 2021 IRRIGATION CONSULTING, INC. EXPRESSLY RESERVES ITS COMMON LAW COPYRIGHT AND OTHER PROPERTY RIGHTS IN THESE DRAWINGS. THESE DRAWINGS ARE NOT TO BE REPRODUCED, CHANGED OR COPIED IN ANY FORM OR MANNER WHATSOEVER, NOR ARE THEY TO BE ASSIGNED TO ANY THIRD PARTY, WITHOUT FIRST OBTAINING THE EXPRESS WRITTEN PERMISSION AND CONSENT OF IRRIGATION CONSULTING, INC.

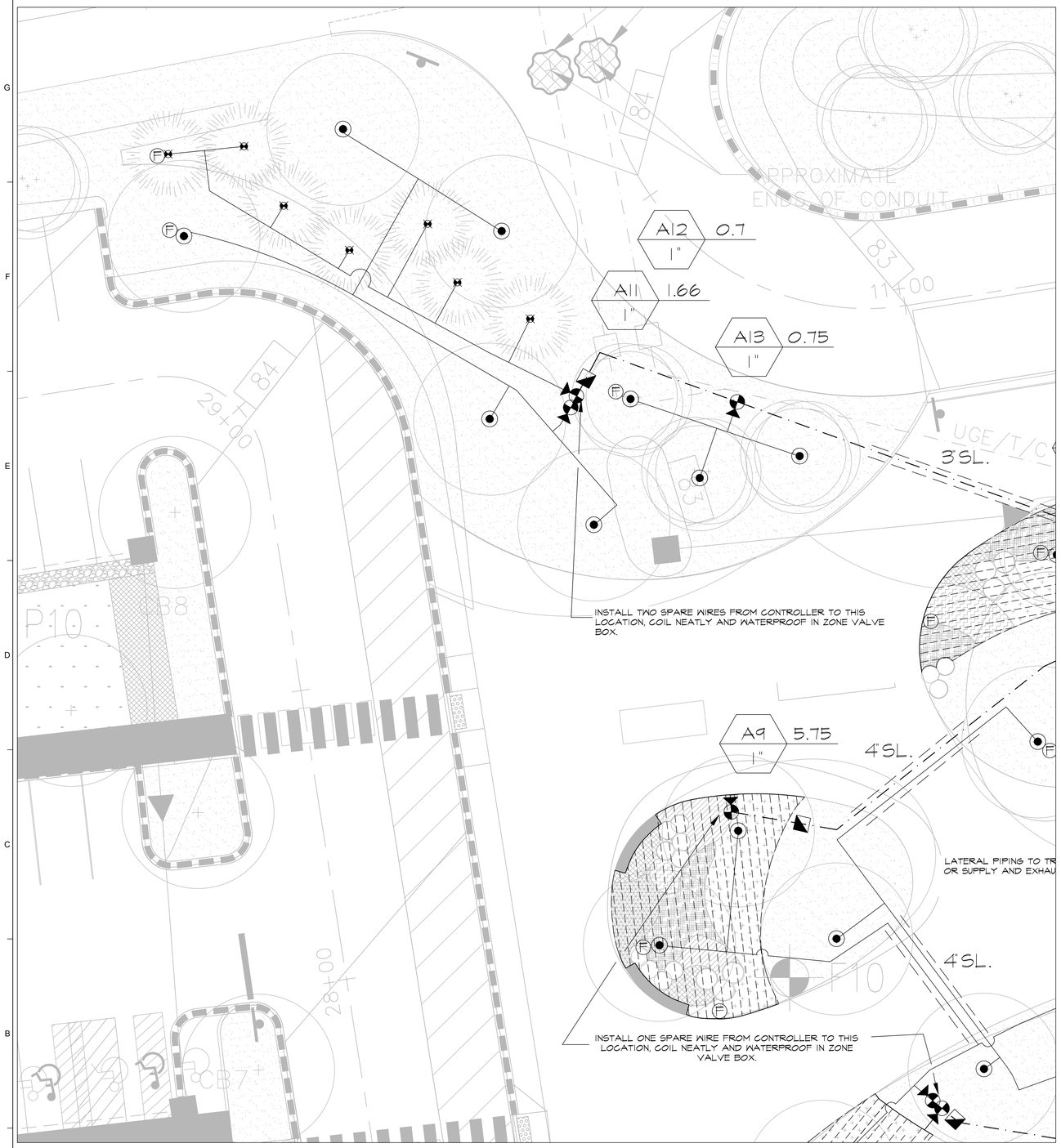

IRRIGATION LEGEND

SYMBOL	PSI	SPACING	DESCRIPTION
	45	-	DEEP DRIP WATERING TREE STAKES 14-INCHES LONG, THREE (3) PER TREE, WITH 1 GPH PRESSURE COMPENSATING EMITTERS
	45	-	DEEP DRIP WATERING TREE STAKES 24-INCHES LONG, FOUR (4) PER TREE, WITH 2 GPH PRESSURE COMPENSATING EMITTERS
	45	12"x18"	IN-LINE EMITTER DRIP TUBING
			ISOLATION GATE VALVE
			1" QUICK COUPLING VALVE
F			MANUAL FLUSHING VALVE
			24 VOLT ELECTRIC ZONE VALVE W/ DISK FILTER (SEE VALVE DESIGNATOR FOR FLOW AND SIZES)
			1" 100 PSI POLYETHYLENE LATERAL PIPE
			1-1/2" CLASS-200 PVC MAINLINE PIPING
			CLASS-200 PVC PIPE SLEEVE (SIZE AS INDICATED) INSTALL SCH-40 PVC WIRE CONDUIT ADJACENT TO ALL MAINLINE PIPE SLEEVES, MINIMUM WIRE CONDUIT SIZE TO BE 2-INCH, UNLESS OTHERWISE NOTED. SEE SLEEVING DETAIL.
R			AUTOMATIC WEATHER SENSOR
A			AUTOMATIC CONTROLLER

VALVE DESIGNATION:

A 25 1"

STATION NO.
FLOW
VALVE SIZE

IRRIGATION NOTES

0. SEE IRRIGATION DETAILS AND SPECIFICATIONS FOR ADDITIONAL REQUIRED INFORMATION.
1. COORDINATE FINAL LOCATION OF DRIP TUBING AND TREE RINGS W/ FINAL APPROVED LANDSCAPE.
2. PIPE AND VALVE LOCATIONS ARE DIAGRAMMATIC, CONTRACTOR SHALL FIELD VERIFY.
3. VALVES AND VALVE BOXES SHALL BE PLACED, IN PLANTED AREAS UNDER MULCH.
4. INSTALL PIPING AS FAR FROM TREES AND ROOT BALLS AS POSSIBLE WHILE MAINTAINING THE DRIP TUBE SPACING.
5. CONTROL WIRE SHALL BE #14 GAUGE SINGLE STRAND RED AND, COMMON WIRE SHALL BE #14 GAUGE SINGLE STRAND WHITE AND ALL SPARE WIRES, INSTALLED WHERE SHOWN, SHALL BE #14 GAUGE SINGLE STRAND BLUE.
6. QUICK COUPLING VALVES SHALL BE INSTALLED ON 1 INCH PVC SWING JOINTS WITH BRASS INSERTS AND STABILIZERS. (SEE DETAIL)
7. IRRIGATION SYSTEM IS DESIGNED TO PROVIDE 12 GPM MAX FROM BUILDING WATER ROOM 002. SYSTEM TO PRODUCE 65-PSI DYNAMIC PRESSURE AT POINT OF CONNECTION IN THE LANDSCAPE AREA.
8. CONTRACTOR SHALL TEST DYNAMIC PRESSURE BEFORE STARTING WORK, REPORT ANY DEVIATION FROM PRESSURE REQUIRED TO OWNER'S REP. BEFORE CONTINUING.
9. INSTALL CONTROLLER IN MECHANICAL ROOM 004 AS DIRECTED BY OWNER'S REP., HARD WIRE TO 120 VOLT, DEDICATED 20 AMP CIRCUIT, BUILDING POWER SUPPLY. ROUTE ZONE AND SPARE WIRES TO CONTROLLER VIA 2 INCH CONDUIT.
10. INSTALL WEATHER SENSOR ON EXTERIOR BUILDING WALL WHERE DIRECTED BY OWNER'S REP. EXTERIOR WEATHER SENSOR WIRING SHALL BE CONTAINED IN 1/2 INCH CONDUIT, SECURED TO OUTSIDE OF BUILDING WALL.
11. ABOVE GROUND WIRING, INSIDE AND OUTSIDE OF BUILDING, SHALL BE INSTALLED IN RIGID CONDUIT.
12. COORDINATE LOCATION OF EXISTING AND FUTURE UTILITIES ON SITE AND CONTACT PROPER AUTHORITIES AND UTILITY COMPANIES BEFORE THE START OF WORK.
13. IN-LINE DRIP TUBING TO BE INSTALLED 6" FROM MASONRY WALLS, PLANTER SIDE WALLS, AND CURBING, ON AN 18" CENTER TO CENTER ROW SPACING.
14. FLUSH LATERAL LINES BEFORE INSTALLING IN-LINE DRIP TUBING.
15. STAKE IN-LINE DRIP TUBING AT MINIMUM 5 FOOT INTERVALS TO PREVENT MOVEMENT AND MINIMUM 3 PER TREE RING.
16. IN-LINE DRIP TUBING TO BE INSTALLED 2 TO 4" BELOW GRADE. NO DRIP LINE TUBING SHALL BE VISIBLE TO THE NAKED EYE.
17. INSTALL MANUAL FLUSH VALVES AT LOWEST POINT OF POLYETHYLENE EXHAUST HEADER, GENERALLY WHERE SHOWN ON THE DRAWINGS.
18. CONTRACTOR MUST SUBMIT PRODUCT SHEETS AS PER THE WRITTEN SPECIFICATIONS TO THE OWNER'S REPRESENTATIVE FOR APPROVAL PRIOR TO ORDERING MATERIAL AND BEGINNING WORK.
19. MATERIAL SUBSTITUTIONS WHICH VARY FROM THE SPECIFIED PRODUCTS MUST BE SUBMITTED TO THE OWNER'S REPRESENTATIVE FOR APPROVAL AS PART OF THE SUBMITTAL PROCESS.
20. ONCE APPROVED SUBMITTALS HAVE BEEN RETURNED TO THE CONTRACTOR, WORK MAY BEGIN. THE OWNER'S REPRESENTATIVE MUST BE NOTIFIED A MINIMUM OF 7-DAYS IN ADVANCE OF THE START OF WORK TO COORDINATE ON-SITE SUPERVISION AND ADMINISTRATION.

ALL IRRIGATION WORK SHOWN IS LUMP SUM

Irrigation Consulting, Inc.
Providing innovative design solutions for irrigation worldwide.
20 Merrit Parkway
Nashua, NH 03062
(978) 433.8872 Fax 433.2188
BVINCHES@IRRIGATIONCONSULTING.COM
112 S. Old Statesville Rd., Suite 104
Huntersville, NC 28078
(704) 843.3680 Fax 843.3511

STACY O. GARDNER
CERTIFIED IRRIGATION DESIGNER
002813
COMMERCIAL GOLF COURSE

PROJECT KEY PLAN

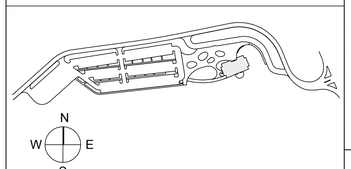

AECOM
AECOM TECHNICAL SERVICES, INC.
66 LONG WHARF
BOSTON, MA 02110
617.723.1700 tel 617.723.6856 fax
www.aecom.com

STATE OF MAINE
DEPARTMENT OF TRANSPORTATION

DATE	
FED PIN NO. NA	
PIN NO: 017163.02 & 017163.03	

PROJECT INFORMATION		SIGNATURE
PROGRAM	-	-
PROJECT MANAGER	-	-
DESIGNER	AECOM	ARCH. LIN. NUMBER
CONSULTANT	COPLON ASSOCIATES	-
PROJECT RESIDENT	-	DATE January 17, 2022
CONTRACTOR	-	-
PROJECT COMPLETION DATE	-	-

MAINE DEPARTMENT OF TRANSPORTATION
ACADIA GATEWAY FACILITY
INTERMODAL AND VISITOR CENTER

IRRIGATION PLAN

SHEET NUMBER
I102

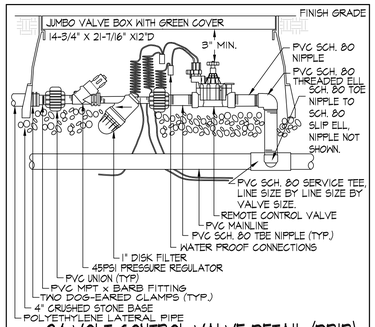

1 24-VOLT CONTROL VALVE DETAIL (DRIP)
NO SCALE

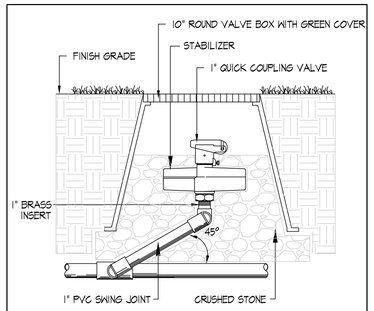

2 QUICK COUPLING VALVE DETAIL
NO SCALE

NOTE:
THREE WATERING STAKES SHALL BE DRIVEN INTO THE ROOT BALL WITH ONLY THE CAP ABOVE GRADE.
¼" DISTRIBUTION TUBING SHALL BE CONNECTED TO 17MM DRIP TUBING. ¼" TUBING SHALL BE INSTALLED BELOW GRADE AND INSERTED INTO THE TREE STAKE INLET. ALL EVERGREEN TREES SHALL RECEIVE 1.0 GPH EMITTER EACH STAKE. TREE STAKES TO BE INSTALLED +/- 3/4 BETWEEN TREE TRUNK AND EDGE OF ROOTBALL.

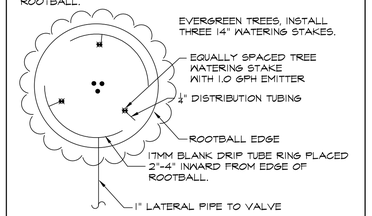

3 TREE WATERING STAKE- PLAN VIEW
NO SCALE EVERGREEN TREES

NOTE:
FOUR WATERING STAKES SHALL BE DRIVEN INTO THE ROOT BALL WITH ONLY THE CAP ABOVE GRADE.
¼" DISTRIBUTION TUBING SHALL BE CONNECTED TO 17MM DRIP TUBING. ¼" TUBING SHALL BE INSTALLED BELOW GRADE AND INSERTED INTO THE TREE STAKE INLET. TREE STAKES TO BE INSTALLED +/- 3/4 BETWEEN TREE TRUNK AND EDGE OF ROOTBALL.

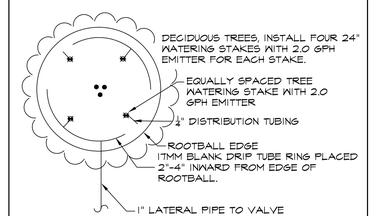

4 TREE WATERING STAKE- PLAN VIEW
NO SCALE DECIDUOUS TREES

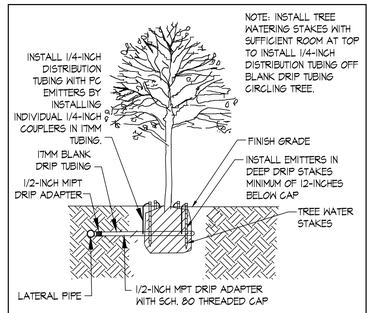

5 TREE WATERING STAKE- SECTION VIEW
NO SCALE

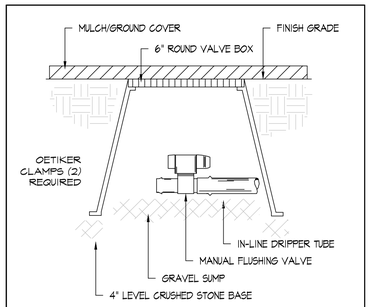

6 MANUAL FLUSHING VALVE
NO SCALE LANDSCAPE

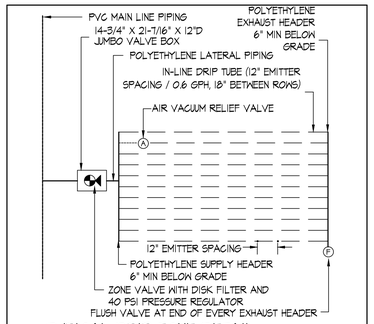

7 TYPICAL DRIP ZONE DETAIL
GROUND COVER - NO SCALE DRIP

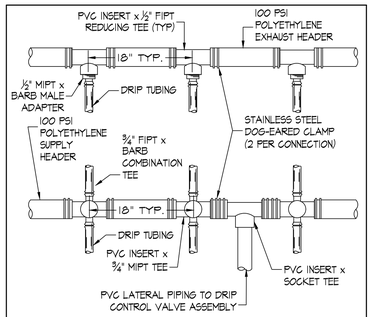

8 DRIP ZONE SUPPLY/EXHAUST HEADER DETAIL
NO SCALE

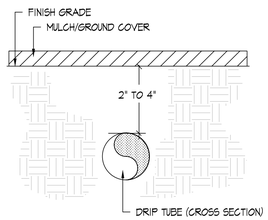

9 IN-LINE DRIP TUBE CROSS SECTION DETAIL
NO SCALE

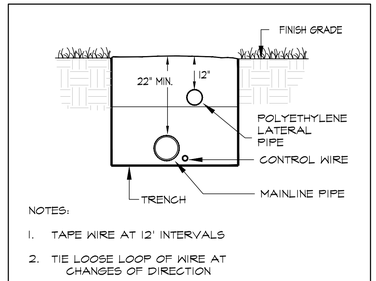

10 TRENCH AND WIRE DETAIL
NO SCALE

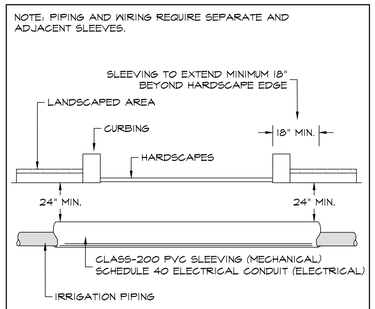

11 PIPE AND WIRE SLEEVING DETAIL
NO SCALE

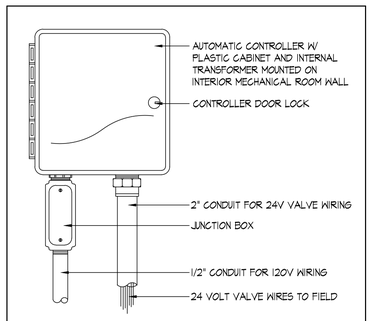

12 AUTOMATIC CONTROLLER DETAIL
NO SCALE

RAIN SENSOR TO BE INSTALLED IN CONTACT WITH THE WEATHER AND NOT IN CONTACT WITH THE IRRIGATION SPRAY TO ENSURE PROPER OPERATION. EACH CONTROLLER TO RECEIVE A DEDICATED RAIN SENSOR ON A DEDICATED COMMON WIRE.

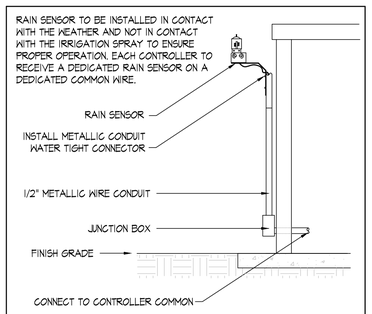

13 RAIN SENSOR MOUNTING DETAIL
NO SCALE

Irrigation Consulting, Inc.
Providing innovative design solutions for irrigation worldwide
20 Merrill Parkway
Nashua, NH 03062
(978) 433.8812 Fax 433.2188
BVINCHES@IRRIGATIONCONSULTING.COM
112 S. Old Statesville Rd., Suite 104
Huntersville, NC 28078
(704) 843.3688 Fax 843.3511

STACY D. GARDNER 002813 CERTIFIED IRRIGATION DESIGNER COMMERCIAL ★ GOLF COURSE

ALL IRRIGATION WORK IS LUMP SUM

AECOM
AECOM TECHNICAL SERVICES, INC.
66 LONG WHARF
BOSTON, MA 02110
617.723.1700 tel 617.723.6856 fax
www.aecom.com

STATE OF MAINE
DEPARTMENT OF TRANSPORTATION

DATE	
FED PIN NO: NA	
PIN NO: 017163.02 & 017163.03	

INFORMATION		SIGNATURE
PROJECT PROGRAM	–	–
PROJECT MANAGER	–	ARCH. LIN. NUMBER
DESIGNER	AECOM	–
CONSULTANT	COPLON ASSOCIATES	–
PROJECT RESIDENT	–	–
CONTRACTOR	–	DATE January 17, 2022
PROJECT COMPLETION DATE	–	–

MAINE DEPARTMENT OF TRANSPORTATION
ACADIA GATEWAY FACILITY
INTERMODAL AND VISITOR CENTER

IRRIGATION DETAILS

SHEET NUMBER
I201

© 2021 IRRIGATION CONSULTING, INC. EXPRESSLY RESERVES ITS COMMON LAW COPYRIGHT AND OTHER PROPERTY RIGHTS IN THESE DRAWINGS. THESE DRAWINGS ARE NOT TO BE REPRODUCED, CHANGED OR COPIED IN ANY FORM OR MANNER WHATSOEVER, NOR ARE THEY TO BE ASSIGNED TO ANY THIRD PARTY, WITHOUT FIRST OBTAINING THE EXPRESS WRITTEN PERMISSION AND CONSENT OF IRRIGATION CONSULTING, INC.

SYMBOLS

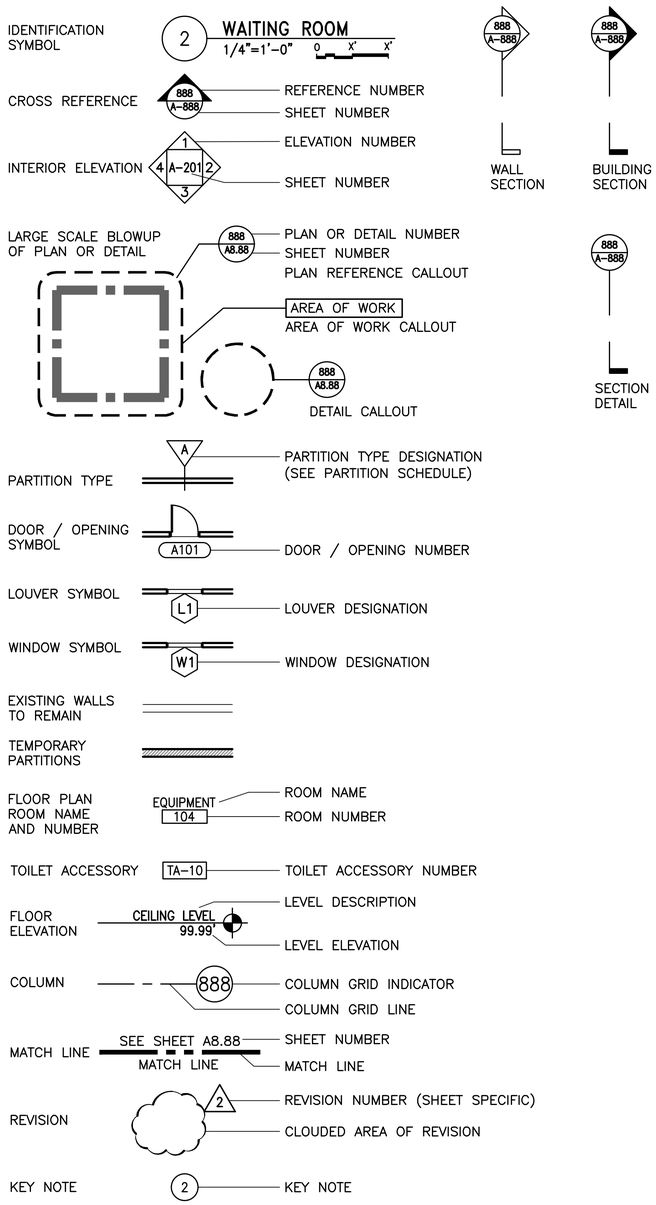

MATERIALS

- BRICK (UON)
- CONCRETE
- CMU
- GYPSUM BOARD (UON)
- PLYWOOD
- RIGID INSULATION (UON)
- STRUCTURAL STEEL

ARCHITECTURAL ABBREVIATIONS

A/C	AIR CONDITIONING
ACC	ACCESSIBLE
ACCT	ACCOUNTING
ACOUST	ACOUSTICAL
ACS	ACCESS CONTROL SYSTEM
ACT	ACOUSTICAL CEILING TILE
ADA	AMERICAN DISABILITY ACT
AD	AREA DRAIN
ADJ	ADJUSTABLE
AFF	ABOVE FINISHED FLOOR
AHU	AIR HANDLING UNIT
AL; ALUM	ALUMINUM
APPROX	APPROXIMATELY
ARCH	ARCHITECTURAL; ARCHITECT
ASST	ASSISTANT
ATTD	ATTACHED
BD	BOARD
BF	BOTTLE FILL
BEL	BELOW
BIT	BITUMINOUS
BLDG	BUILDING
BLK	BLOCK(ING)
BM	BEAM
BO	BOTTOM OF
BOT	BOTTOM
BS	BOTH SIDES
BTWN	BETWEEN
CAB	CABINET
CB	CATCH BASIN
CEM	CEMENT
CG	CORNER GAURD
CIP	CAST-IN-PLACE
CJ	CONTROL JOINT
CL	CENTER LINE
CLG	CEILING
CLNG	CEILING
CLR	CLEAR(ANCE)
CLR OPG	CLEAR OPENING
CMU	CONCRETE MASONRY UNIT
COL(S)	COLUMN(S)
CONC	CONCRETE
CONF	CONFERENCE
CONST	CONSTRUCTION
CONT	CONTINUOUS
CORR	CORRIDOR, CORRUGATED
CPT	CARPET
CT	CERAMIC TILE
CTR	CENTER
CRTWAL	CURTAINWALL
D	DEEP
DBL	DOUBLE
DEMO	DEMOLISH/DEMOLITION
DET	DETAIL
DF	DRINKING FOUNTAIN
DIA	DIAMETER
DIM	DIMENSION
DIV	SPECIFICATION DIVISION
DN	DOWN
DO	DOOR OPENING
DR	DOOR
DWG	DRAWING
EA	EACH
EB	EXPANSION BOLT
EJ	EXPANSION JOINT
EL	ELEVATION
ELEC	ELECTRICAL
ELEV	ELEVATOR
ENCL	ENCLOSURE
EQ	EQUAL
EQUIP	EQUIPMENT
EV	ELEVATOR
EX	EXISTING
EXEC	EXECUTIVE
EXH	EXHAUST
EXIST	EXISTING
EXP	EXPANSION, EXPOSED
EXT	EXTERIOR
FA	FIRE ALARM
FAB	FABRICATE(D)
FACP	FIRE ALARM CONTROL PANEL
FAST	FASTEN(ER)
FD	FLOOR DRAIN
FDN	FOUNDATION
FE	FIRE EXTINGUISHER
FEC	FIRE EXTINGUISHER CABINET
FF	FACTORY FINISH
FHC	FIRE HOSE CABINET
FIN	FINISH
FIXT	FIXTURE
FL; FLR	FLOOR
FLUOR	FLUORESCENT
FND	FEMININE NAPKIN DISPOSAL
FOC	FACE OF CONCRETE
FOF	FACE OF FINISH
FOS	FACE OF STUDS
FP	FIRE PROTECTION
FRP	FIBERGLASS REINFORCED PANEL
FRT	FIRE RETARDANT
FT	FEET / FOOT
FTG	FOOTING
FURR	FURRING
GA	GAUGE
GALV	GALVANIZED
GB1	GRAB BAR (42")
GB2	GRAB BAR (36")
GB3	GRAB BAR (24")
GC	GENERAL CONTRACTOR
GEN	GENERAL
GL	GLASS
GR	GRADE
GWB	GYPSUM WALLBOARD
H	HIGH, HEIGHT
HB	HOSE BIBB
HC	HOLLOW CORE
HDCP	HANDICAP PERSON
HDWD	HARDWOOD
HDWR	HARDWARE
HGT	HEIGHT
HM	HOLLOW METAL
HORIZ	HORIZONTAL
HP	HIGH POINT
HVAC	HEATING, VENTILATING AND AIR-CONDITIONING
ID	INSIDE DIAMETER
INCAND	INCANDESCENT
INCL	INCLUDE(D, ING)
INSTL	INSTALLED
INSUL	INSULATION
INT	INTERIOR
JAN	JANITOR
JT	JOINT
L	LENGTH
LAM	LAMINATE(D)
LAV	LAVATORY
LCKR	LOCKER
LH	LEFT HAND
LHR	LEFT HAND REVERSE
LP	LOW POINT
LTG	LIGHTING
MACH	MACHINE
MAINT	MAINTENANCE
MANUF	MANUFACTURER
MAS	MASONRY
MAT	MATERIAL
MAX	MAXIMUM
MECH	MECHANICAL
MED	MEDIUM, MEDIAN
MEMB	MEMBRANE
MEZZ	MEZZANINE
MGR	MANAGER
MIN	MINIMUM
MIR	MIRROR
MISC	MISCELLANEOUS
MO	MASONRY OPENING
MOD	MODULAR
MR	MOISTURE RESISTANT
MTD	MOUNTED
MTG	MOUNTING
MTL	METAL
MWK	MILLWORK
N/A	NOT APPLICABLE
N.I.C.	NOT IN CONTRACT
NO	NUMBER
NOM	NOMINAL
NTS	NOT TO SCALE
OA	OVERALL
O.C.	ON CENTER
OCC	OCCUPANT
OD	OUTSIDE DIAMETER
OFF	OFFICE
OPNG	OPENING
OPHD	OPPOSITE HAND
OPP H	
OPP HAND	
OPP	OPPOSITE
OPS	OPERATIONS
ORD	OVERFLOW ROOF DRAIN
P	PAINT
PERF	PERFORATED
PERIM	PERIMETER
PRF	PREFORMED
PFN	PREFINISHED
PL	PLATE
PLAS LAM	PLASTIC LAMINATE
PLAS	PLASTER
PLUMB	PLUMBING
PLYWD	PLYWOOD
PM	PRESSED METAL
POL	POLISHED
PR	PAIR
PT	POINT
P-T; PT	PRESSURE-TREATED
PTD	PAINTED
PTDD	PAPER TOWEL DISPENCER & DISPOSAL
PTN	PARTITION
QT	QUARRY TILE
QTY	QUANTITY
R	RADIUS, RISER
RB	RUBBER
RCP	REFLECTED CEILING PLAN
RD	ROOF DRAIN
RE	RESIDENT ENGINEER
REF	REFERENCE
REG	REGISTER
REINF	REINFORCED
RENOV	RENOVATE(D)
REQ	REQUIRED
RESIL	RESILIENT
RET	RETURN
REV	REVISION
RH	RIGHT HAND
RHR	RIGHT HAND REVERSE
RWL	RAIN WATER LEADER
RM	ROOM
RO	ROUGH OPENING
RU	ROLLUP
S	SINGLE
SC	SOLID CORE
SCD	SEAT COVER DISPENSER
SCHED	SCHEDULE
SD	SECTIONAL DOOR
SDPR	SOAP DISPENSER
SECT	SECTION
SEP	SEPARATE
SHT	SHEET
SHTH	SHEATHING
SHWR	SHOWER
SIM	SIMILAR
SIP	STRUCTURAL INSULATED PANEL(S)
SK	SINK
SPEC	SPECIFICATIONS
SPLR	SPRINKLER
SPM	SPRINKLER MAIN
SQ	SQUARE
SS; SST	STAINLESS STEEL
STA	STATION
STD	STANDARD
STL	STEEL
STOR	STORAGE
STRUCT	STRUCTURAL
SUSP	SUSPENDED
SYM	SYMMETRICAL
T	TREAD
T&G	TONGUE AND GROOVE
TCO	TEMP CERTIFICATE OF OCCUPANCY
TEMP	TEMPORARY, TEMPERED
TEL	TELEPHONE
TER	TERRAZZO
THK	THICK(NESS)
THRU	THROUGH
TLT	TOILET
TO	TOP OF
TOC	TOP OF CURB, TOP OF CONCRETE
TOM	TOP OF MASONRY
TOS	TOP OF STEEL
TOW	TOP OF WALL
TPT	TOILET PARTITION
TTD	TOILET TISSUE DISPENSER
TYP	TYPICAL
UNF	UNFINISHED
UON	UNLESS OTHERWISE NOTED
UR	URINAL
VB	VAPOR BARRIER
VCT	VINYL COMPOSITION TILE
VERT	VERTICAL
VEST	VESTIBULE
VIF	VERIFY IN FIELD
VIN	VINYL
VWC	VINYL WALLCOVERING
W	WIDE, WIDTH
W/	WITH
WC	WATER CLOSET
WCO	WALL CLEANOUT
WD	WOOD
WIN	WINDOW
WO	WINDOW OPENING
W/O	WITHOUT
WP	WORKING POINT
WPR	WATERPROOF(ING)
WS	WEATHERSTRIP(ING)
WT	WEIGHT

AECOM
1 FEDERAL STREET, 8TH FLOOR
BOSTON, MA 02110
617.723.1700
www.aecom.com

STATE OF MAINE
DEPARTMENT OF TRANSPORTATION

DATE

FED P/N NO: NA

WIN NO: 017163.02 & 017163.03

LICENSED ARCHITECT KATYA MICHELLE WENGLER No. 5292 STATE OF MAINE

SIGNATURE

ARCH. LIN. NUMBER ARC5292

DATE JANUARY 17, 2022

PROJECT INFORMATION

PROGRAM	-
PROJECT MANAGER	-
DESIGNER	AECOM
CONSULTANT	-
PROJECT RESIDENT	-
CONTRACTOR	-
PROJECT COMPLETION DATE	-

MAINE DEPARTMENT OF TRANSPORTATION
ACADIA GATEWAY FACILITY
INTERMODAL AND WELCOME CENTER

SYMBOLS AND ABBREVIATIONS

SHEET NUMBER
A001

\\na.aecomnet.com\lfs\AMER\Boston-USBOS01\DCS\Projects\TRN\60653001_MaineDOT_Acadia_Gateway\900_CAD_GIS\910_CAD\Sheet\A001.dwg Jan 17, 2022 - 2:58pm

FIRE/LIFE SAFETY GENERAL NOTES:

1. ALL MEANS OF EGRESS SHALL BE IN ACCORDANCE WITH CURRENT REQUIREMENTS OF ALL GOVERNING REGULATIONS AND CODES.
2. ALL MEANS OF EGRESS SHALL BE ILLUMINATED IN ACCORDANCE WITH CURRENT REQUIREMENTS OF ALL GOVERNING REGULATIONS AND CODES.
3. THE PATH OF EXIT TRAVEL TO AND WITHIN EXITS IN THE BUILDING SHALL BE IDENTIFIED BY EXIT SIGNS. EXIT SIGNS SHALL BE READILY VISIBLE FROM ANY DIRECTION OF EGRESS TRAVEL AND SHALL CONFORM TO CURRENT REQUIREMENTS OF ALL GOVERNING REGULATIONS AND CODES.
4. EXIT SIGNS SHALL BE INTERNALLY OR EXTERNALLY ILLUMINATED AND SHALL HAVE AN INTENSITY OF NOT LESS THEN 5 FOOTCANDLES.
5. ALL EXIT SIGNS SHALL BE ILLUMINATED AT ALL TIMES. TO ENSURE CONTINUED ILLUMINATION FOR A DURATION OF NOT LESS THAN 1 1/2 HOURS IN CASE OF PRIMARY POWER LOSS, THE EXIT SIGNS SHALL BE CONNECTED TO AN EMERGENCY ELECTRICAL SYSTEM PROVIDED FROM STORAGE BATTERIES, UNIT EQUIPMENT OR AN ON–SITE GENERATOR SET, AND THE SYSTEM SHALL BE INSTALLED IN ACCORDANCE WITH THE CURRENT REQUIREMENTS OF ALL GOVERNING REGULATIONS AND CODES.
6. PROVIDE TEMPORARY EXIT SIGNS TO ASSURE MEANS OF EGRESS DURING CONSTRUCTION.
7. ALL INTERIOR FINISHES SHALL COMPLY WITH THE APPLICABLE CODE REQUIREMENTS AND LOCAL FIRE AUTHORITY REQUIREMENTS.
8. DECORATIVE MATERIALS SHALL BE NON–COMBUSTIBLE AND BE MAINTAINED IN A FLAME–RETARDANT CONDITION.
9. FLAME SPREAD CLASSIFICATION FOR INTERIOR FINISHES IS AS FOLLOWS:
   CLASS A: FLAME SPREAD 0–25; SMOKE–DEVELOPED 0–450.
   CLASS B: FLAME SPREAD 26–75; SMOKE–DEVELOPED 0–450.
   CLASS C: FLAME SPREAD 76–200; SMOKE–DEVELOPED 0–450.
10. PROVIDE A MINIMUM OF ONE 2–A10BC CLASSIFICATION FIRE EXTINGUISHER WITHIN 75 FEET TRAVEL DISTANCE FOR EACH 6,000 SQ. FEET OR PORTION THEREOF ON EACH FLOOR: ALSO DURING CONSTRUCTION (COMPLY WITH THE 2006 INTERNATIONAL FIRE CODE SECTION 906).
11. PROVIDE PORTABLE FIRE EXTINGUISHER IN ACCORDANCE WITH THE 2006 INTERNATIONAL FIRE CODE, SECTION 906, LOCATED NOT LESS THAN 10 FEET, NOR MORE THAN 30 FEET FROM ANY FLAMMABLE LIQUID STORAGE AREA OUTSIDE OF A HAZARDOUS MATERIAL ROOM, OR ADJACENT TO.
12. PLANS FOR ALL FIXED FIRE PROTECTION EQUIPMENT SUCH AS STANDPIPES SPRINKLER SYSTEMS AND FIRE ALARM SYSTEMS MUST BE SUBMITTED AND APPROVED BY LOCAL FIRE AUTHORITY PRIOR TO INSTALLATION.
13. THE INSTALLATION OF AUTOMATIC FIRE SPRINKLER SYSTEMS SHALL COMPLY WITH APPLICABLE CURRENT BUILDING CODE AND LOCAL FIRE AUTHORITY REQUIREMENTS.
14. AISLE LEADING TO REQUIRED EXITS SHALL HAVE A MINIMUM WIDTH OF 44". MAINTAIN A CONTINUOUS WALKWAY WITH A MINIMUM WIDTH OF 44" TO A PUBLIC WAY.
15. PROVIDE OCCUPANT LOAD SIGNS AS REQUIRED BY APPLICABLE CODE AND LOCAL FIRE AUTHORITY.
16. HORIZONTAL OCCUPANCY SEPARATIONS IF REQUIRED MUST BE SUPPORTED WITH A STRUCTURAL SYSTEM HAVING EQUIVALENT FIRE RESISTIVE PROTECTION.
17. VERTICAL OCCUPANCY SEPARATIONS IF REQUIRED MUST EXTEND THROUGH UNDER–FLOOR AND ATTIC AREAS, INCLUDING AREAS WHERE FIRE–RESISTIVE CEILINGS ARE SPECIFIED.
18. IF FIRE–RESISTIVE WALL IS REQUIRED, FILL IRREGULAR SPACES BETWEEN THE WALL AND DECK ABOVE WITH FIRE SAFING MATERIALS AND SEAL TIGHTLY PER APPLICABLE CODE REQUIREMENTS AND STANDARDS.
19. IF FIRE–RESISTIVE WALL OR FLOOR IS REQUIRED, ALL FLOOR AND WALL PENETRATIONS REQUIRED FOR PIPES, CONDUITS, ETC. SHALL BE SEALED TO PREVENT THE PASSAGE OF FIRE AND/OR SMOKE PER APPLICABLE CODE REQUIREMENTS AND STANDARDS.
20. FIRE /SMOKE DAMPERS SHALL BE PROVIDED WHERE DUCTS PENETRATE FIRE– RATED WALLS OR CEILINGS.

ARCHITECTURAL GENERAL NOTES:

1. ALL WORK SHALL BE IN FULL ACCORDANCE WITH ALL STATE AND LOCAL BUILDING CODES.
2. THE INTENT OF THE CONTRACT DOCUMENTS IS TO INCLUDE ALL ITEMS NECESSARY FOR THE PROPER EXECUTION AND COMPLETION OF THE WORK BY THE CONTRACTOR. THE CONTRACT DOCUMENTS ARE COMPLEMENTARY, AND WHAT IS REQUIRED BY ONE SHALL BE AS BINDING AS IF REQUIRED BY ALL; PERFORMANCE BY THE CONTRACTOR SHALL BE REQUIRED TO THE EXTENT CONSISTENT WITH THE CONTRACT DOCUMENTS AND REASONABLY INFERABLE FROM THEM AS BEING NECESSARY TO PRODUCE THE INDICATED RESULTS.
3. ORGANIZATION OF THE SPECIFICATIONS INTO DIVISIONS, SECTIONS AND ARTICLES, AND ARRANGEMENT OF DRAWINGS SHALL NOT LIMIT THE CONTRACTOR IN DIVIDING THE WORK AMONG SUBCONTRACTORS OR IN ESTABLISHING THE EXTENT OF THE WORK TO BE PERFORMED BY ANY TRADE.
4. THE DRAWINGS AND PROJECT MANUAL ESTABLISH DETAILED MINIMUM REQUIREMENTS FOR THE DESIGN AND CONSTRUCTION OF THE PROJECT. PARTIAL SETS OF CONTRACT DOCUMENTS ARE INCOMPLETE AND SHOULD NOT BE DISTRIBUTED OR UTILIZED.
5. ALL WORK INCLUDING MATERIALS, METHODS, ASSEMBLIES, ETC. SHALL COMPLY WITH CURRENT REQUIREMENTS OF ALL GOVERNING REGULATIONS AND CODES.
6. CONTRACTOR SHALL BE RESPONSIBLE FOR OBTAINING AND PAYING FEES OF ALL PERMITS PRIOR TO STARTING CONSTRUCTION.
7. BEFORE STARTING EACH PORTION OF THE WORK, CONTRACTOR SHALL CAREFULLY STUDY THE VARIOUS DRAWINGS AND OTHER CONTRACT DOCUMENTS RELATIVE TO THAT PORTION OF THE WORK. REFER TO DRAWINGS OF ALL DISCIPLINES THAT ARE INCLUDED IN CONTRACT DOCUMENTS FOR ADDITIONAL INFORMATION. WHERE DISCREPANCIES EXIST IN CONTRACT DOCUMENTS, CONSULT ARCHITECT BEFORE PROCEEDING WITH THE WORK.
8. VERIFY ALL DIMENSIONS AND CONDITIONS AT THE PROJECT AND ON THE JOB SITE. BRING ANY DISCREPANCIES OR CONFLICTS TO THE ATTENTION OF THE ARCHITECT PRIOR TO COMMENCEMENT OF WORK.
9. VERIFY AND COORDINATE WITH APPLICABLE UTILITY PROVIDERS. BRING ANY DISCREPANCIES OR CONFLICTS TO THE ATTENTION OF THE ARCHITECT PRIOR TO COMMENCEMENT OF WORK.
10. VERIFY ALL MECHANICAL, PLUMBING AND ELECTRICAL INFORMATION AND REQUIREMENTS PRIOR TO COMMENCEMENT OF WORK. WHERE DISCREPANCIES AND CONFLICTS EXIST, CONSULT ARCHITECT BEFORE PROCEEDING WITH THE WORK.
11. REVIEW THE CONTRACT DOCUMENTS AND COORDINATE WITH ALL SUB–CONTRACTORS, TRADES AND SUPPLIERS. IDENTIFY AND NOTIFY THE ARCHITECT OF ANY DISCREPANCIES OR CONFLICTS PRIOR TO COMMENCEMENT OF WORK.
12. REPETITIVE FEATURES ARE NOT DRAWN IN THEIR ENTIRETY AND SHALL BE COMPLETELY PROVIDED AS IF DRAWN IN FULL. TYPICAL DETAILS APPLY AT ALL SIMILAR CONDITIONS WHETHER CROSS REFERENCED OR NOT.
13. DO NOT SCALE DRAWINGS.
14. UNLESS OTHERWISE NOTED, PLAN DIMENSIONS ARE TO COLUMN GRID LINES OR CENTERLINES, FACE OF CONCRETE OR CMU WALLS, FACE OF GYPSUM BOARD, OR FACE OF FINAL LAYER OF SUBSTRATE OF INTERIOR PARTITION ASSEMBLY (EXCLUSIVE OF APPLIED FINISHES).
15. DOOR LOCATIONS NOT DIMENSIONED ARE:
    A. 4" FROM JAMB FACE TO FACE OF WALL (SEE NOTE ABOVE).
    B. CENTER LINE OF DOOR ALIGNS WITH CENTER OF ROOM OR CORRIDOR.
16. FINISH FLOOR ELEVATIONS REFER TO TOP OF CONCRETE SLAB, UNLESS NOTED OTHERWISE. WHERE CONCRETE SLAB IS DEPRESSED TO ACCOMMODATE SETTING BEDS, RAISED ACCESS FLOOR, AND OTHER SIMILAR FLOOR ASSEMBLIES, FINISH FLOOR ELEVATIONS ARE TO TOP OF FINISH FLOOR ASSEMBLY INDICATED.
17. HEIGHT DIMENSIONS AS REFERENCED ON REFLECTED CEILING PLANS ARE MEASURED FROM FINISH FLOOR OF INDIVIDUAL ROOMS UNLESS NOTED OTHERWISE.
18. ALL WORK NOTED "N.I.C." IS NOT IN CONTRACT. CONTRACTOR SHALL COORDINATE WITH "OTHER" CONTRACTORS PER REQUIREMENT ESTABLISHED BY OWNER.
19. ALL MATERIALS FURNISHED AT THE JOB SITE SHALL BE NEW AND FREE FROM DEFECTS, AND SHALL BE STORED IN THE SITE IN SUCH A MANNER AS TO PROTECT THEM FROM DAMAGE. ALL WORK SHALL BE OF BEST PRACTICE OF EACH TRADE.
20. VERIFY AND COORDINATE SIZES, LOCATION AND MOUNTING OF ALL EQUIPMENT AND FIXTURES. PROVIDE REQUIRED BLOCKING, BACKING, SLEEVES, ETC.
21. MAINTAIN THE PREMISES CLEAN AND FREE OF TRASH AND DEBRIS. PROTECT PROJECT, THE SITE, AND PERSONAL PROPERTY FROM DAMAGES.
22. PROTECT WORK AREAS AND EXISTING AREAS, INCLUDING EXISTING UTILITIES, FROM DAMAGES. REPAIR, REPLACE, OR PATCH ANY DAMAGE DUE TO CONSTRUCTION. REPAIRED CONSTRUCTION IS SUBJECT TO REVIEW AND ACCEPTANCE BY ARCHITECT.
23. IF THERE ARE DISCREPANCIES, THE SPECIFICATIONS SHALL GOVERN DRAWINGS; LARGE–SCALE DRAWINGS SHALL GOVERN SMALL–SCALE DRAWINGS.
24. PROVIDE REQUIRED TEMPORARY UTILITIES, BRACING, SUPPORTS, SHORING, ETC. CONTRACTOR SHALL BE RESPONSIBLE FOR DESIGN ADEQUACY AND SAFETY OF ERECTION.

ARCHITECTURAL GENERAL NOTES CONT.:

25. CONTRACTOR SHALL MAINTAIN CURRENT UPDATED RECORD DRAWINGS AND SPECIFICATIONS ON SITE AT ALL TIME.
26. CONTRACTOR IS RESPONSIBLE FOR MEANS AND METHODS OF CONSTRUCTION.
27. METAL FABRICATIONS AND SUPPORT ASSEMBLIES WHETHER SHOWN OR NOT SHOWN SHALL BE PROVIDED FOR THE STRUCTURAL SUPPORT OF MISCELLANEOUS ELEMENTS. GENERAL CONTRACTOR IS RESPONSIBLE FOR PROVIDING ENGINEERED STRUCTURAL ASSEMBLIES AND CALCULATIONS SHOWING COMPLIANCE WITH CODE REQUIREMENTS AND ACCOUNTING FOR STATIC AND DYNAMIC LOADS INCLUDING ANY WIND OR SEISMIC LOADS, THERMAL MOVEMENT OF SUPPORTING STRUCTURE AND DIMENSIONAL TOLERANCES OF THE BUILDING.
28. PROVIDE FIRE TREATED BLOCKING FOR MOUNTING ALL TOILET ACCESSORIES, TOILET PARTITIONS, RAILINGS, GUARDRAILS, MILLWORK, SIGNAGE AND OWNER PROVIDED ITEMS.

SUSTAINABILITY NOTES:

1. NO SMOKING IS PERMITTED WITHIN THE PERIMETER OF THE PROJECT SITE, WITHIN THE EXISTING BUILDING OR WITHIN 25 FEET OF AN EXISTING BUILDING ENTRANCE.
2. AT THE END OF EACH DAY OF CONSTRUCTION ACTIVITIES ALL CONSTRUCTION DEBRIS AND WASTE MATERIALS SHALL BE COLLECTED AND PROPERLY DISPOSED OF IN TRASH OR RECYCLE BINS.

AECOM
1 FEDERAL STREET, 8TH FLOOR
BOSTON, MA 02110
617.723.1700
www.aecom.com

STATE OF MAINE
DEPARTMENT OF TRANSPORTATION

	DATE

FED PIN NO: NA
WIN NO: 017163.02 & 017163.03

LICENSED ARCHITECT KATLA MICHELLE WENGLER No. 5292 STATE OF MAINE

SIGNATURE	Katla Wengler
ARCH. LIN. NUMBER	ARC5292
DATE	JANUARY 17, 2022

PROJECT INFORMATION	
PROGRAM	–
PROJECT MANAGER	–
DESIGNER	AECOM
CONSULTANT	–
PROJECT RESIDENT	–
CONTRACTOR	–
PROJECT COMPLETION DATE	–

MAINE DEPARTMENT OF TRANSPORTATION
ACADIA GATEWAY FACILITY
INTERMODAL AND WELCOME CENTER

ARCHITECTURAL NOTES

SHEET NUMBER
A002

\\na.aecomnet.com\lfs\AMER\Boston-USBOS01\DCS\Projects\TRN\60653001_MaineDOT_Acadia_Gateway\900_CAD_GIS\910_CAD\Sheet\A002.dwg Jan 17, 2022 - 2:59pm

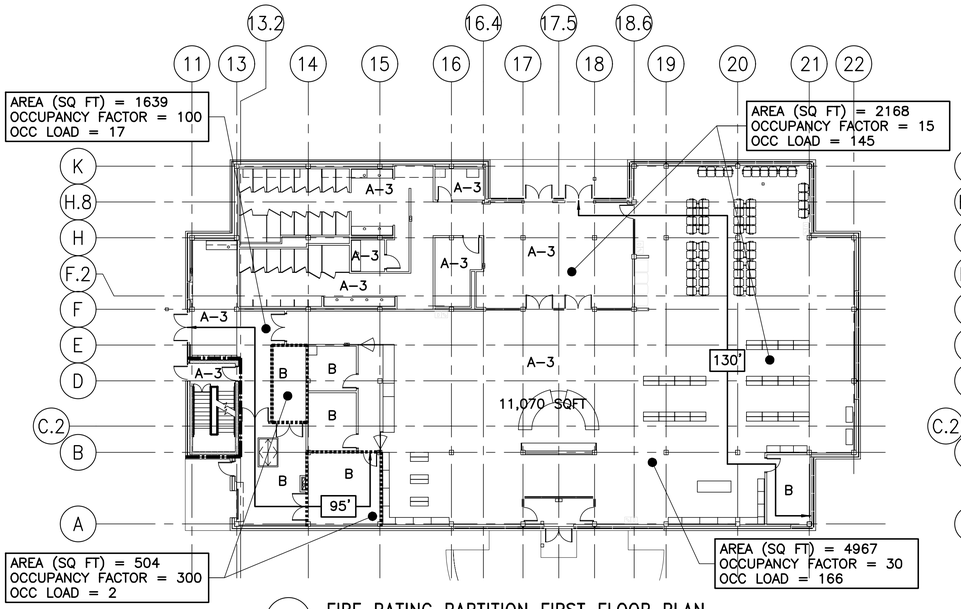

2 FIRE RATING PARTITION FIRST FLOOR PLAN
1/16"=1'-0"

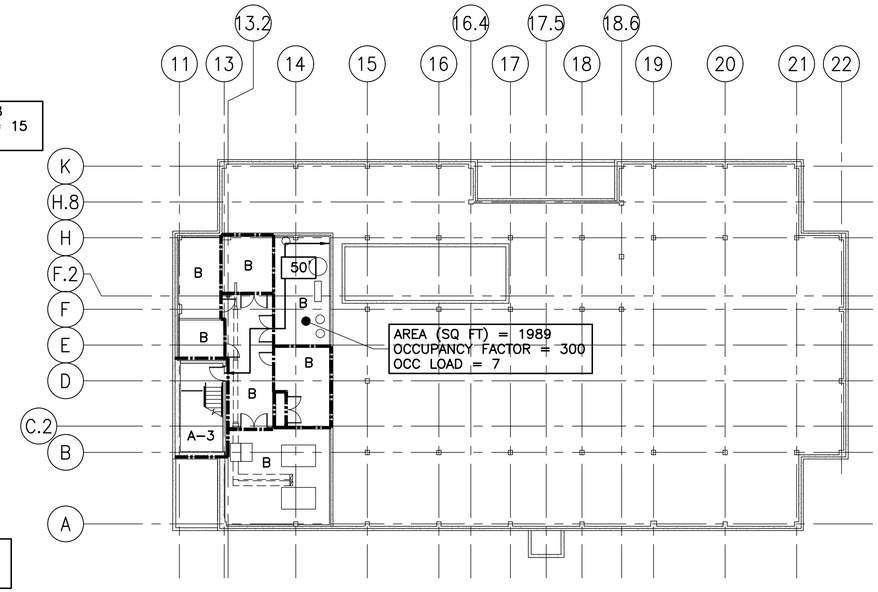

1 FIRE RATING PARTITION BASEMENT PLAN
1/16"=1'-0"

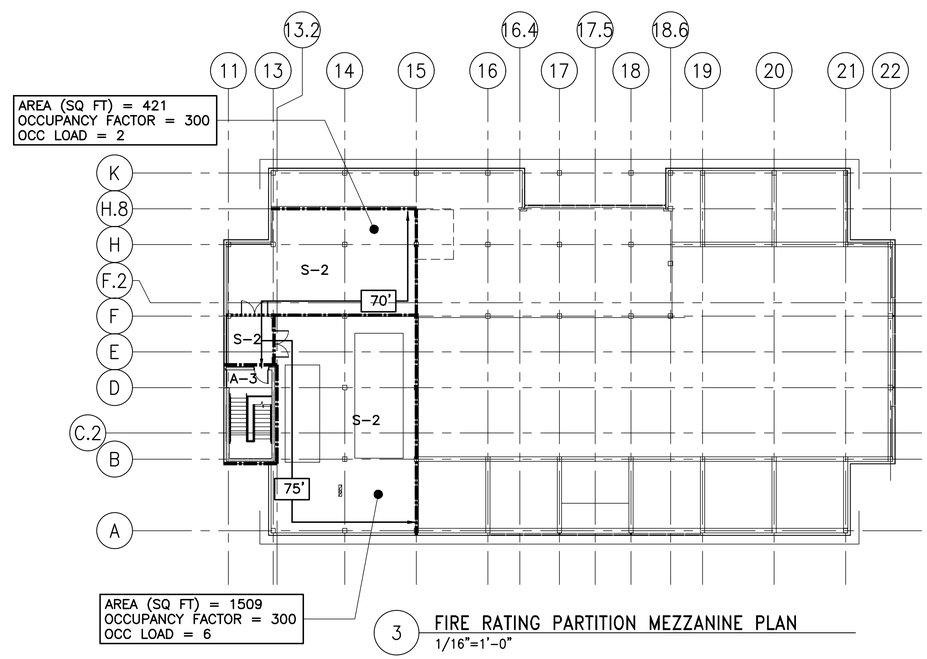

3 FIRE RATING PARTITION MEZZANINE PLAN
1/16"=1'-0"

CODE SUMMARY

BUILDING NAME	ACADIA GATEWAY CENTER
BUILDING LOCATION	TRENTON, ME
USE GROUP(S)	A-3 (IBC) ASSEMBLY (NFPA 101) B (IBC) BUSINESS (NFPA 101)
CONSTRUCTION TYPE	TYPE VB [V(000)]
ALLOWABLE HEIGHT	1 STORY AND 60 FEET
ACTUAL HEIGHT	1 STORY AND 30 FEET
ALLOWABLE FOOTPRINT AREA	22,500 SQUARE FEET
ACTUAL FOOTPRINT AREA	11,100 SQUARE FEET

EGRESS CAPACITY FACTORS	
STAIRS	0.3 INCHES / OCCUPANT
OTHER COMPONENTS	0.2 INCHES / OCCUPANT

SPRINKLER SYSTEM	YES, IN ACCORDANCE W/ NFPA 13 (2015 edition)
FIRE ALARM SYSTEM	YES, IN ACCORDANCE W/ NFPA 72 (2016 edition)
STANDPIPE SYSTEM	NOT REQUIRED
FIRE EXTINGUISHERS	YES, IN ACCORDANCE W/ NFPA 10 (2017 edition)

APPLICABLE CODES

BUILDING
MAINE UNIFORM BUILDING CODE (MUBC), REFERENCED BY THE MAINE UNIFORM BUILDING AND ENERGY CODE (MUBEC) CHAPTER 3, WHICH IS AN AMENDED VERSION OF THE 2015 INTERNATIONAL BUILDING CODE (IBC).

FIRE PREVENTION
2018 EDITION OF NFPA 1, FIRE CODE AS ADOPTED BY THE RULES OF THE STATE FIRE MARSHAL CHAPTER 3

ACCESSIBILITY
2009 ICC A117.1, ACCESSIBLE AND USABLE BUILDINGS AND FACILITIES 2010 ADA STANDARDS FOR ACCESSIBLE DESIGN

ELECTRICAL
2020 NFPA 70, NATIONAL ELECTRIC CODE

PLUMBING
MAINE STATE PLUMBING CODE WHICH ADOPTS AND AMENDS THE 2021 UNIFORM PLUMBING CODE (UPC)

ENERGY
MAINE UNIFORM ENERGY CODE (MUEC), REFERENCED BY THE MUBEC CHAPTER 6, WHICH AN AMENDED VERSION OF THE 2015 INTERNATIONAL ENERGY CONSERVATION CODE (IECC)

OTHER
NATIONAL FIRE PROTECTION ASSOCIATION (NFPA) STANDARDS:

NFPA 13, 2016 EDITION, STANDARD FOR THE INSTALLATION OF SPRINKLER SYSTEMS

NFPA 72, 2019 EDITION, NATIONAL FIRE ALARM AND SIGNALING CODE

NFPA 101, 2018 EDITION, LIFE SAFETY CODE

INTERIOR FINISHES AND TRAVEL DISTANCE REQUIREMENTS

OCCUPANCY CLASSIFICATION	EXIT ENCLOSURES & EXIT PASSAGEWAYS	EXIT ACCESS CORRIDORS & OTHER EXIT WAYS	ROOMS & ENCLOSED SPACES	TRAVEL DISTANCE TO EXIT	COMMON PATH OF TRAVEL DISTANCE	DEAD END TRAVEL DISTANCE
A-3 (ASSEMBLY)	CLASS A	CLASS A OR B	CLASS A, B OR C	250 FEET	75 FEET FOR < 50 OCCUPANTS 20 FEET FOR ≥ 50 OCCUPANTS	20 FEET
B (BUSINESS)	CLASS A OR B	CLASS A OR B	CLASS A, B OR C	300 FEET	100 FEET	50 FEET
S-2 (STORAGE)	CLASS C	CLASS C	CLASS C	400 FEET	100 FEET	50 FEET

KEY PLAN

SMOKE PARTITION	
1 HOUR FIRE BARRIER	
2 HOUR FIRE BARRIER	

PROJECT NORTH
true north
W E S

AECOM
1 FEDERAL STREET, 8TH FLOOR
BOSTON, MA 02110
617.723.1700
www.aecom.com

STATE OF MAINE
DEPARTMENT OF TRANSPORTATION

DATE

FED P/N NO: NA

WIN NO: 017163.02 & 017163.03

LICENSED ARCHITECT KARLA MICHELLE WENGLER No. 5292 STATE OF MAINE

SIGNATURE

ARCH. LIN. NUMBER ARC5292

DATE JANUARY 17, 2022

PROJECT INFORMATION		
PROGRAM	-	
PROJECT MANAGER	-	
DESIGNER	AECOM	
CONSULTANT	-	
PROJECT RESIDENT	-	
CONTRACTOR	-	
PROJECT COMPLETION DATE	-	

MAINE DEPARTMENT OF TRANSPORTATION
ACADIA GATEWAY FACILITY
INTERMODAL AND WELCOME CENTER

CODE SHEET AND
FIRE RATING PARTITION PLANS

SHEET NUMBER
A003

\\na.aecomnet.com\lfs\AMER\Boston-USBOS01\DCS\Projects\TRN\60653001_MaineDOT_Acadia_Gateway\900_CAD_GIS\910_CAD\Sheet\A003.dwg Aug 23, 2022 - 9:38am

PHASE III - WELCOME CENTER - OCCUPANT LOAD

FLOOR	ROOM	AREA (SQ FT)	LOAD FACTOR (SQ FT / OCCUPANT)	OL	TOTAL OL
B	Storage / Mechanical	1,989	300	6.6	7
				Total for Floor	**7**
1	Assembly	2,168	15	144.5	145
	Mercantile	4,967	30	165.5	166
	Office / Circulation	1,639	100	16.4	17
	Storage / MEP	504	300	1.68	2
				Total for Floor	**330**
2	Storage / MEP	2,800	300	5.03	6
				Total for Floor	**6**
				Total for Phase	**343**

PHASE III - WELCOME CENTER - EXIT CAPACITY

FLOOR	EXIT	COMPONENT	WIDTH	FACTOR	CAPACITY	EXIT CAPACITY
B	Stair 1	Stair	44	0.3	146	146
		Door	34	0.2	170	
						Total Provided = 146 Total Required = 7
1	North Doors – Main Exit	Door	136	0.2	680	680
	West Doors	Door	68	0.2	340	340
						Total Provided = 1020 Total Required = 327
2	Stair 1	Stair	44	0.3	146	146
		Door	34	0.2	170	
						Total Provided = 292 Total Required = 89

AECOM
1 FEDERAL STREET, 8TH FLOOR
BOSTON, MA 02110
617.723.1700
www.aecom.com

STATE OF MAINE
DEPARTMENT OF TRANSPORTATION

DATE

FED PIN NO: NA

WIN NO: 017163.02 & 017163.03

LICENSED ARCHITECT
KARLA MICHELLE WENGLER
No. 5292
STATE OF MAINE

SIGNATURE

ARCH. LIN. NUMBER
ARC5292

DATE JANUARY 17, 2022

PROJECT INFORMATION	
PROGRAM	–
PROJECT MANAGER	–
DESIGNER	AECOM
CONSULTANT	–
PROJECT RESIDENT	–
CONTRACTOR	–
PROJECT COMPLETION DATE	–

MAINE DEPARTMENT OF TRANSPORTATION
ACADIA GATEWAY FACILITY
INTERMODAL AND WELCOME CENTER

CODE SHEET AND
FIRE RATING PARTITION PLANS

SHEET NUMBER
A004

\\na.aecomnet.com\lfs\AMER\Boston-USBOS01\DCS\Projects\TRN\60653001_MaineDOT_Acadia_Gateway\900_CAD_GIS\910_CAD\Sheet\A004.dwg Jan 17, 2022 - 3:00pm

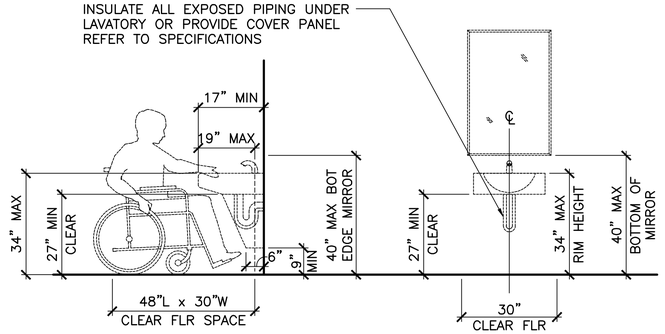

1. PROVIDE WOOD BLOCKING IN WALLS TO RECEIVE ALL ACCESSORIES, MILLWORK, FASTENERS AND TOILET PARTITIONS
2. VERIFY ALL MOUNTING HEIGHTS AND CLEARANCES WITH APPLICABLE BUILDING CODES
3. EXPOSED WATER AND DRAIN PIPES UNDER LAVATORIES SHALL BE INSULATED TO PROTECT AGAINST CONTACT

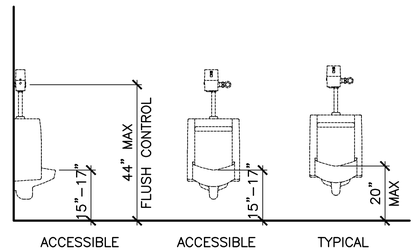

1. MAXIMUM HEIGHT SHALL BE REDUCED TO 3'–8" WHERE AN OBSTRUCTION (SHELF, TABLE) OCCURS IN FRONT OF CONTROL OR OPERATING PARTS

MIN MOUNTING HEIGHT: 15" AFF (ACCESSIBLE)

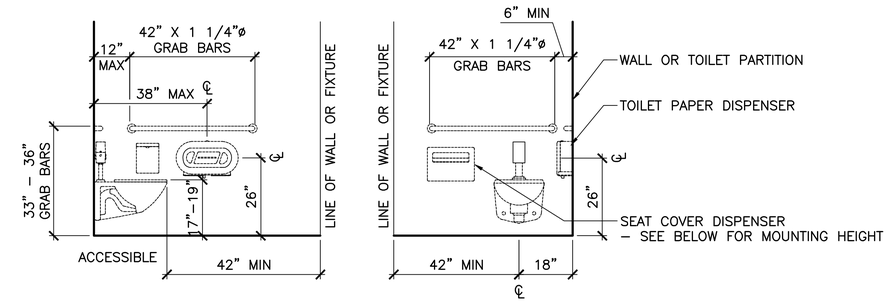

1. FLUSH LEVER SHALL BE LOCATED AT WIDE SIDE OF WC, NO HIGHER THAN 44" AFF
   GRAB BARS SHALL BE 1 1/2" DIA (1 1/4" MIN)
   PROVIDE 1 1/2" MIN CLEARANCE BEHIND AND BELOW GRAB BARS
2. PROVIDE ADEQUATE BLOCKING INSIDE WALLS FOR GRAB BAR INSTALLATION

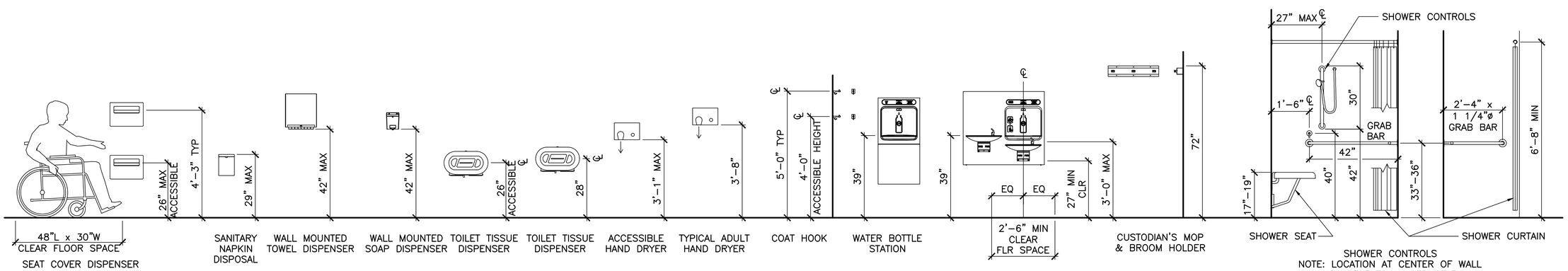

1. MAXIMUM MOUNTING HEIGHTS (48") FOR OPERATING PARTS OF ACCESSIBLE CONTROLS, INCLUDING: ELECTRICAL SWITCHES AND CONTROLS.

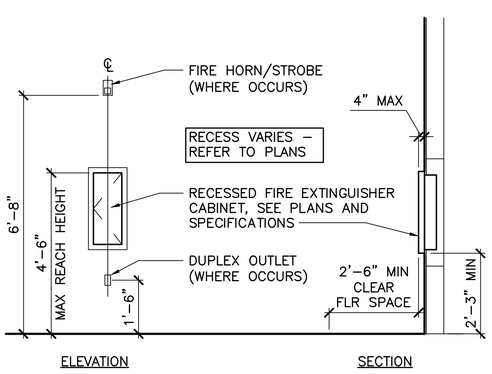

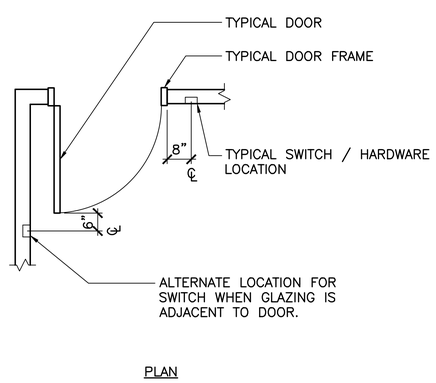

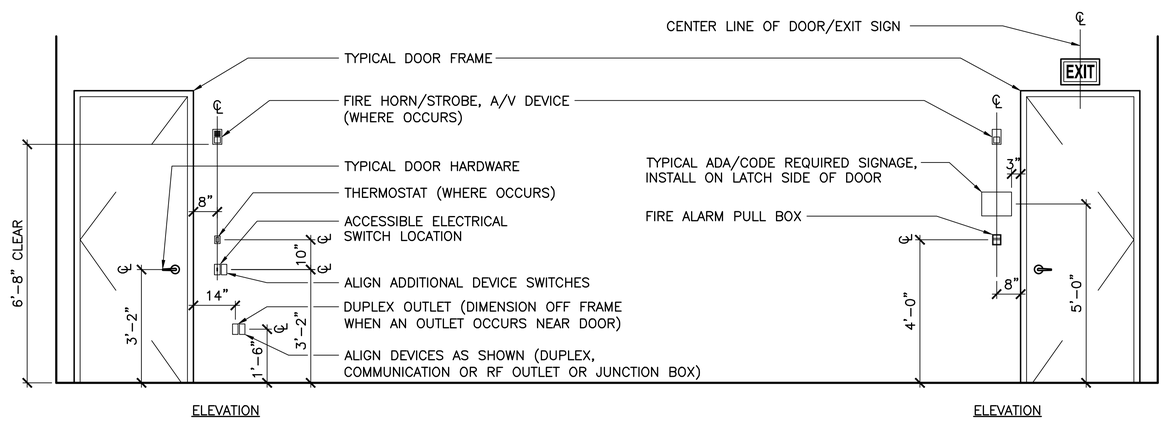

MOUNTING HEIGHT NOTES:

1. ALL MOUNTING HEIGHTS SHALL BE MEASURED FROM FINISHED FLOOR TO CENTERLINE OF DEVICE EXCEPT EXIT SIGNS.
2. DEVICES SHALL BE INSTALLED ON A COMMON VERTICAL CENTERLINE WHEREVER POSSIBLE.
3. ALL DEVICES SHALL BE INSTALLED AT MOUNTING HEIGHTS AS INDICATED ON THESE DETAILS UNLESS OTHERWISE NOTED.
4. MOUNTING HEIGHT FOR TELEPHONE, DATA AND ELECTRICAL OUTLETS SHALL BE 1'–6" AFF UNLESS OTHERWISE NOTED.
5. DIMENSION FROM FRAME INCLUDES DOORS WITH SIDELIGHTS.
6. REFER TO TYPICAL CODE FOR REQUIRED SIGNAGE.
7. ELECTRICAL/TELEPHONE OUTLET COMBINATIONS TO BE MOUNTED OTHER SIDE OF THE SAME STUD. OUTLETS TO BE STAGGERED FROM ONE SIDE TO THE OTHER OF WALLS TO INHIBIT TRANSFER OF SOUND.
8. REFER TO POWER/COMMUNICATIONS AND ENGINEERS ELECTRICAL PLANS FOR DEVICE LOCATIONS.

AECOM
1 FEDERAL STREET, 8TH FLOOR
BOSTON, MA 02110
617.723.1700
www.aecom.com

STATE OF MAINE
DEPARTMENT OF TRANSPORTATION

	DATE

FED PIN NO: NA
WIN NO: 017163.02 & 017163.03

LICENSED ARCHITECT KATYA MICHELLE WENGLER No. 5292 STATE OF MAINE

INFORMATION	
SIGNATURE	
ARCH. LIN. NUMBER	ARC5292
DATE	JANUARY 17, 2022

PROJECT INFORMATION	
PROGRAM	–
PROJECT MANAGER	–
DESIGNER	AECOM
CONSULTANT	–
PROJECT RESIDENT	–
CONTRACTOR	–
PROJECT COMPLETION DATE	–

MAINE DEPARTMENT OF TRANSPORTATION
ACADIA GATEWAY FACILITY
INTERMODAL AND WELCOME CENTER

TYPICAL MOUNTING HEIGHTS

SHEET NUMBER
A005

\\na.aecomnet.com\lfs\AMER\Boston-USBOS01\DCS\Projects\TRN\60653001_MaineDOT_Acadia_Gateway\900_CAD_GIS\910_CAD\Sheet\A005.dwg Jan 17, 2022 - 3:00pm

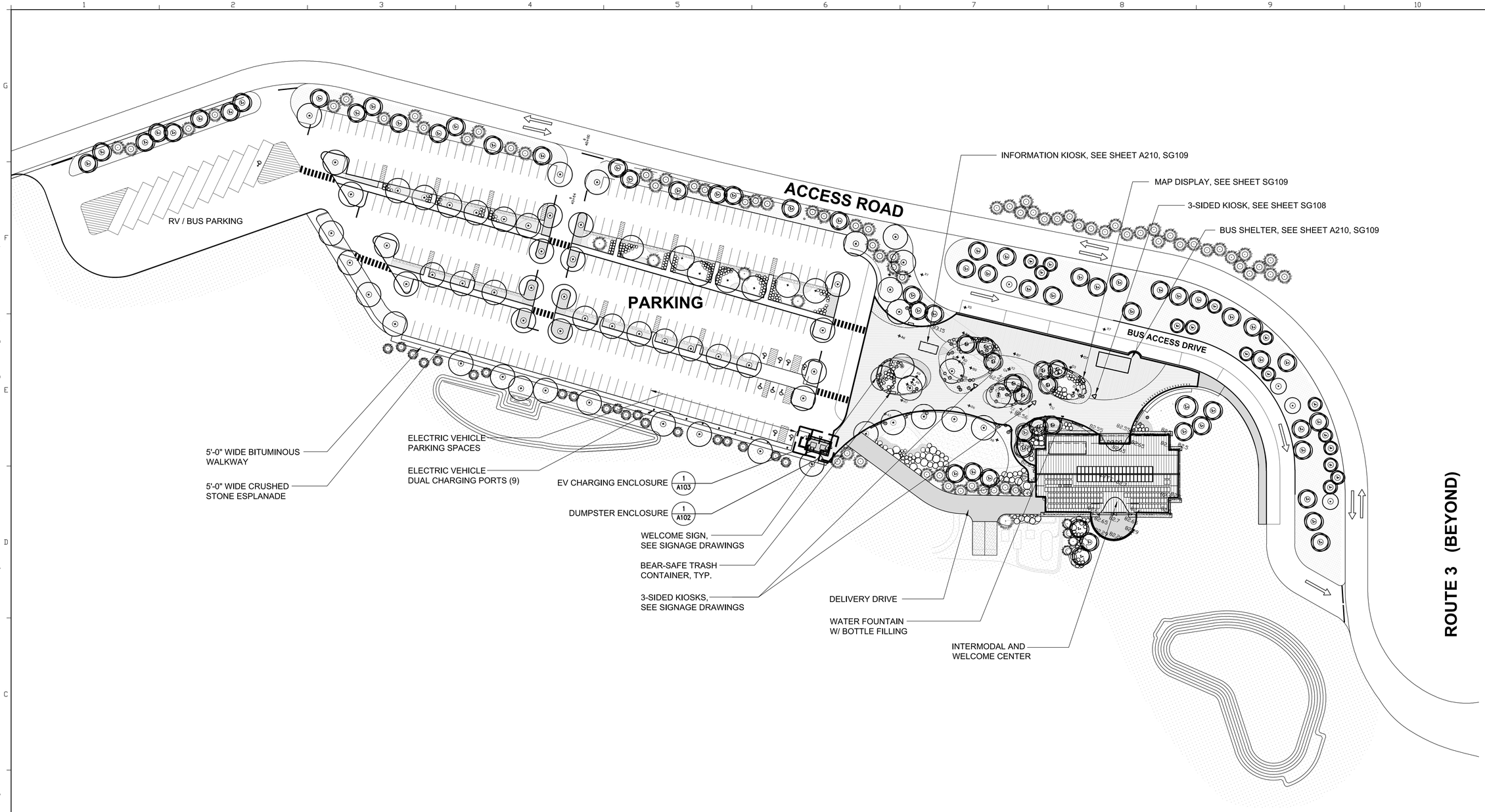

1 SITE PLAN
1"=50'-0"
0 10' 50' 100'

PROJECT NORTH
true north
W E S

AECOM
1 FEDERAL STREET, 8TH FLOOR
BOSTON, MA 02110
617.723.1700
www.aecom.com

STATE OF MAINE
DEPARTMENT OF TRANSPORTATION

	DATE

FED P/N NO: NA
WIN NO: 017163.02 & 017163.03

LICENSED ARCHITECT KARLA MICHELLE WENGLER No. 5292 STATE OF MAINE

SIGNATURE	
ARCH. LIN. NUMBER	ARC5292
DATE	JANUARY 17, 2022

PROJECT	INFORMATION
PROGRAM	–
PROJECT MANAGER	–
DESIGNER	AECOM
CONSULTANT	–
PROJECT RESIDENT	–
CONTRACTOR	–
PROJECT COMPLETION DATE	–

MAINE DEPARTMENT OF TRANSPORTATION
ACADIA GATEWAY FACILITY
INTERMODAL AND WELCOME CENTER

SITE PLAN

SHEET NUMBER
A101

\\na.aecomnet.com\lfs\AMER\Boston-USBOS01\DCS\Projects\TRN\60653001_MaineDOT_Acadia_Gateway\900_CAD_GIS\910_CAD\Sheet\A101.dwg Aug 03, 2022 - 3:57pm

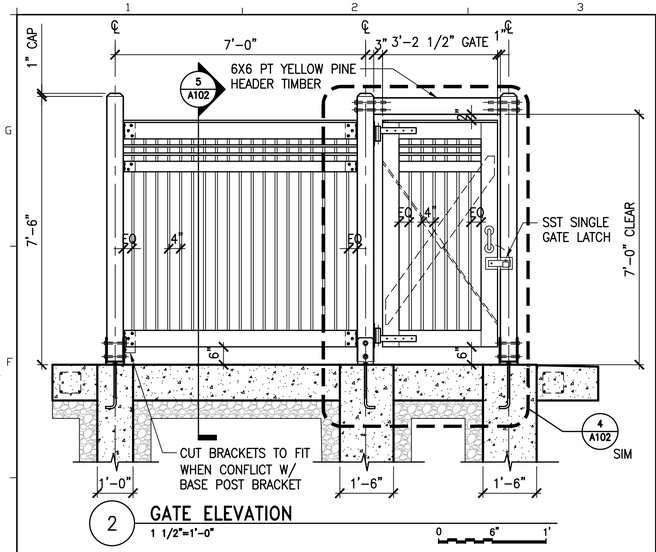

2 GATE ELEVATION
1 1/2"=1'-0"

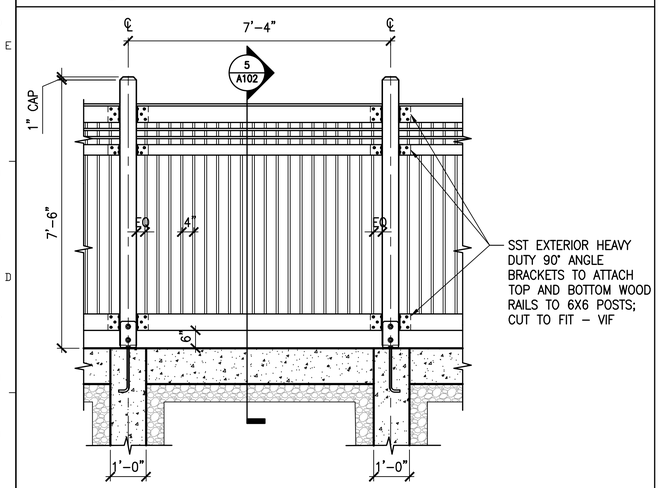

3 FENCE ELEVATION
1 1/2"=1'-0"

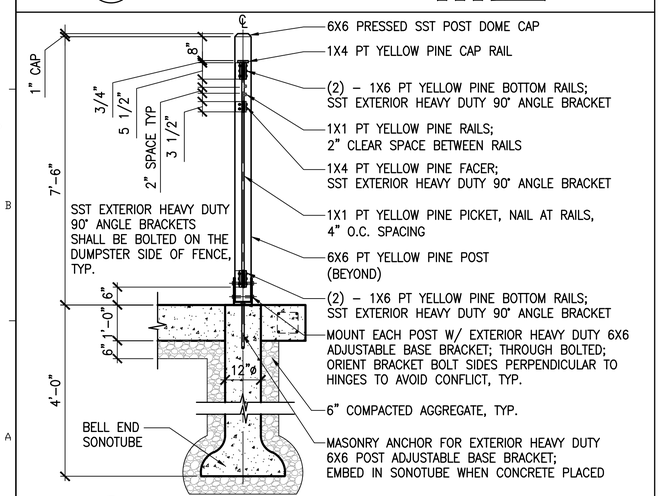

5 FENCE SECTION
1 1/2"=1'-0"

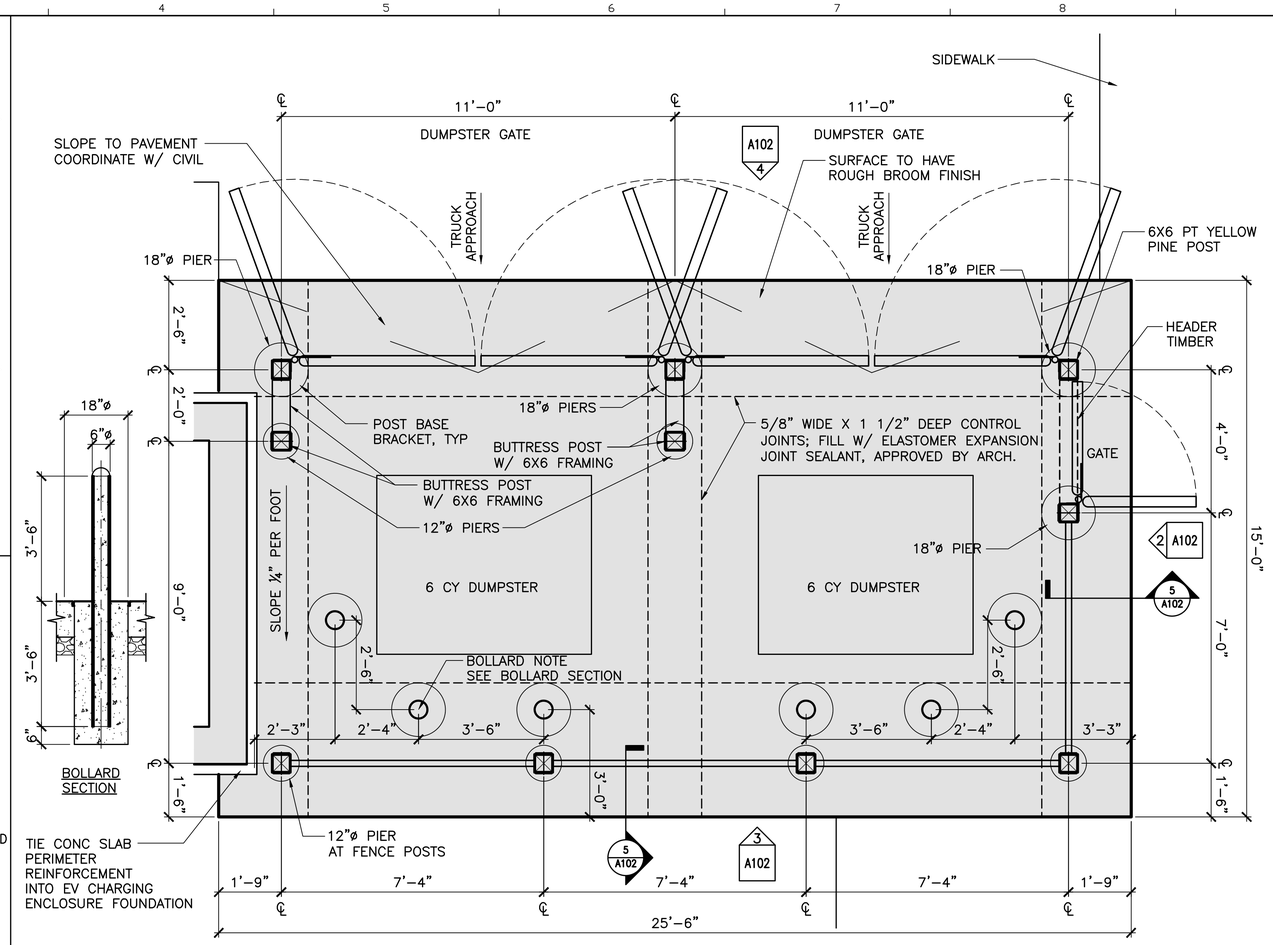

BOLLARD NOTE:
6"ø STEEL BOLLARDS FILLED W/ CONC. AND ENBEDDED 42" IN 18"ø CONC. SONOTUBE; BOLLARDS EXTEND 42" ABOVE T.O.SLAB AND PAINTED "YELLOW"; ATTACH BOLLARD CAP

1 DUMPSTER ENCLOSURE ENLARGED PLAN
1/2" = 1'-0"

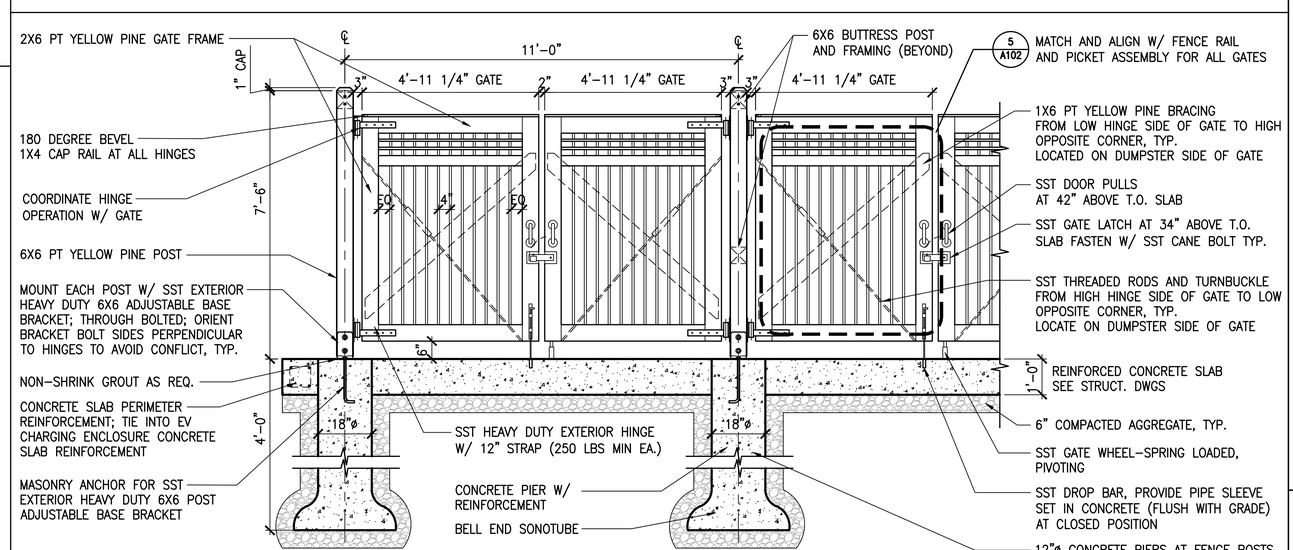

4 ELEVATION AT DUMPSTER GATE
1 1/2"=1'-0"

NOTES

1. 2x6 DOOR FRAME W/FULL HALF-LAP JOINT AT EACH CORNER. EACH CORNER GLUED WITH WATERPROOF CONSTRUCTION ADHESIVE AND THROUGH BOLTED WITH (4) 1/4" GALV CAP SCREWS

2. ALL POSTS, FRAMES AND PICKETS EXCEPT DOORS P.T. SOUTHERN YELLOW PINE. DOOR FRAMES AND PICKETS CLEAR WESTERN RED CEDAR

3. ALL POSTS TO ALIGN

AECOM
1 FEDERAL STREET, 8TH FLOOR
BOSTON, MA 02110
617.723.1700
www.aecom.com

STATE OF MAINE
DEPARTMENT OF TRANSPORTATION

DATE

FED PIN NO: NA
WIN NO: 017163.02 & 017163.03

LICENSED ARCHITECT KARLA MICHELLE WENGLER No. 5292 STATE OF MAINE

SIGNATURE

ARCH. LIN. NUMBER ARC5292

DATE JANUARY 17, 2022

PROJECT	INFORMATION
PROGRAM	–
PROJECT MANAGER	–
DESIGNER	AECOM
CONSULTANT	–
PROJECT RESIDENT	–
CONTRACTOR	–
PROJECT COMPLETION DATE	–

MAINE DEPARTMENT OF TRANSPORTATION
ACADIA GATEWAY FACILITY
INTERMODAL AND WELCOME CENTER

SITE ELEMENTS DETAILS

SHEET NUMBER
A102

\\na.aecomnet.com\lfs\AMER\Boston-USBOS01\DCS\Projects\TRN\60653001_MaineDOT_Acadia_Gateway\900_CAD_GIS\910_CAD\Sheet\A102.dwg Jan 17, 2022 - 3:02pm

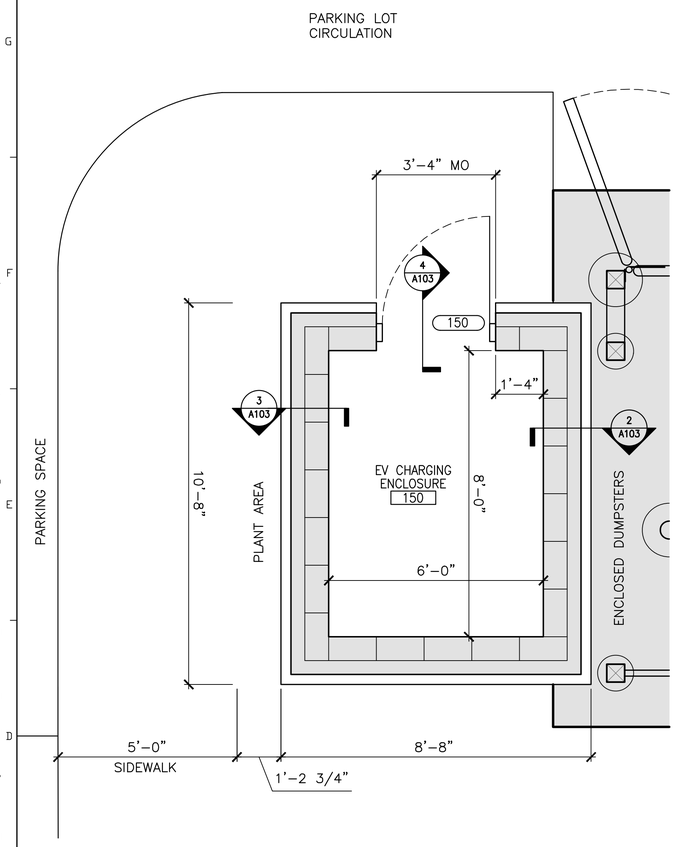

1 EV CHARGING ENCLOSURE ENLARGED PLAN
1/2" = 1'-0"

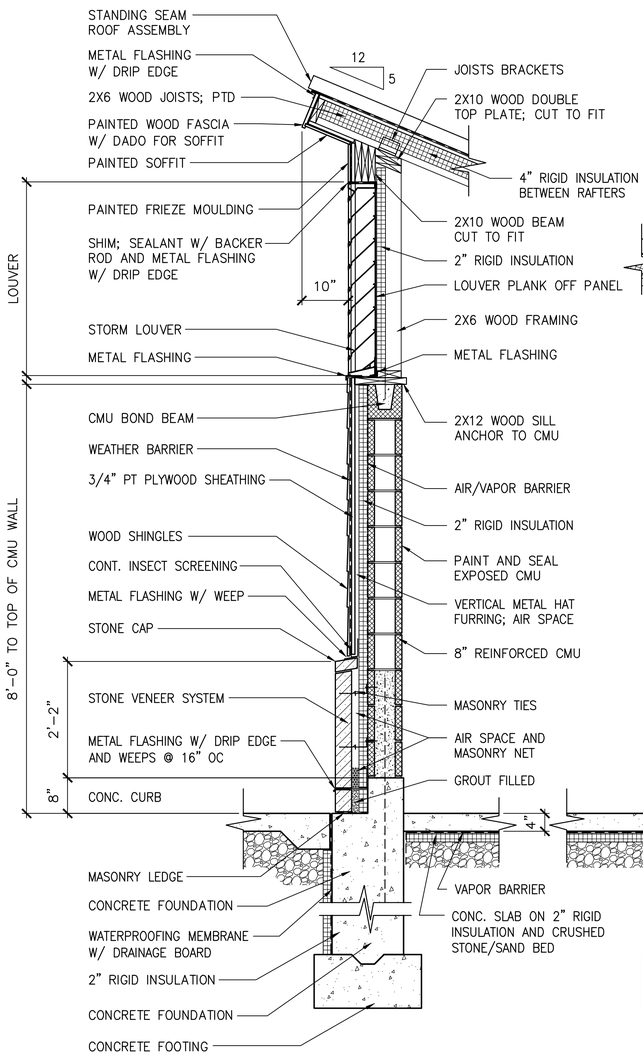

2 WALL SECTION
3/4"=1'-0"

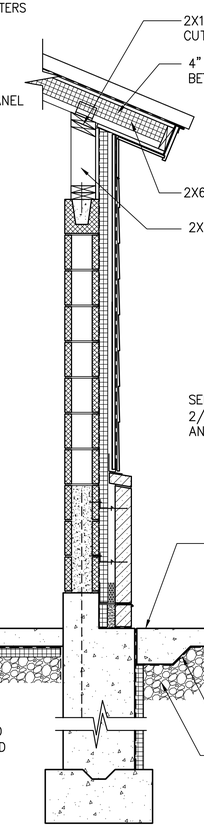

3 WALL SECTION
3/4"=1'-0"

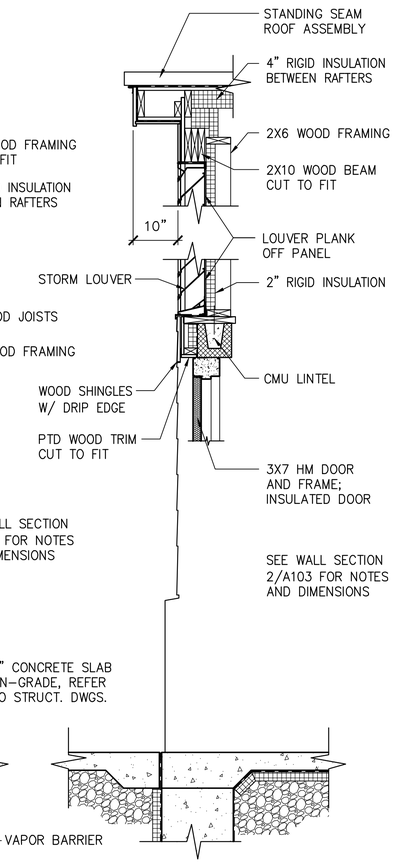

4 WALL SECTION
3/4"=1'-0"

NOTES

AECOM
1 FEDERAL STREET, 8TH FLOOR
BOSTON, MA 02110
617.723.1700
www.aecom.com

STATE OF MAINE
DEPARTMENT OF TRANSPORTATION

DATE

FED PIN NO: NA
WIN NO: 017163.02 & 017163.03

LICENSED ARCHITECT KAYLA MICHELLE WENGLER No. 5292 STATE OF MAINE

SIGNATURE

ARCH. LIN. NUMBER ARC5292

DATE JANUARY 17, 2022

PROJECT INFORMATION	
PROGRAM	–
PROJECT MANAGER	–
DESIGNER	AECOM
CONSULTANT	–
PROJECT RESIDENT	–
CONTRACTOR	–
PROJECT COMPLETION DATE	–

MAINE DEPARTMENT OF TRANSPORTATION
ACADIA GATEWAY FACILITY
INTERMODAL AND WELCOME CENTER

EV CHARGING ENCLOSURE
PLAN AND DETAILS

SHEET NUMBER
A103

\\na.aecomnet.com\lfs\AMER\Boston-USBOS01\DCS\Projects\TRN\60653001_MaineDOT_Acadia_Gateway\900_CAD_GIS\910_CAD\Sheet\A103.dwg Jan 26, 2022 - 3:05pm

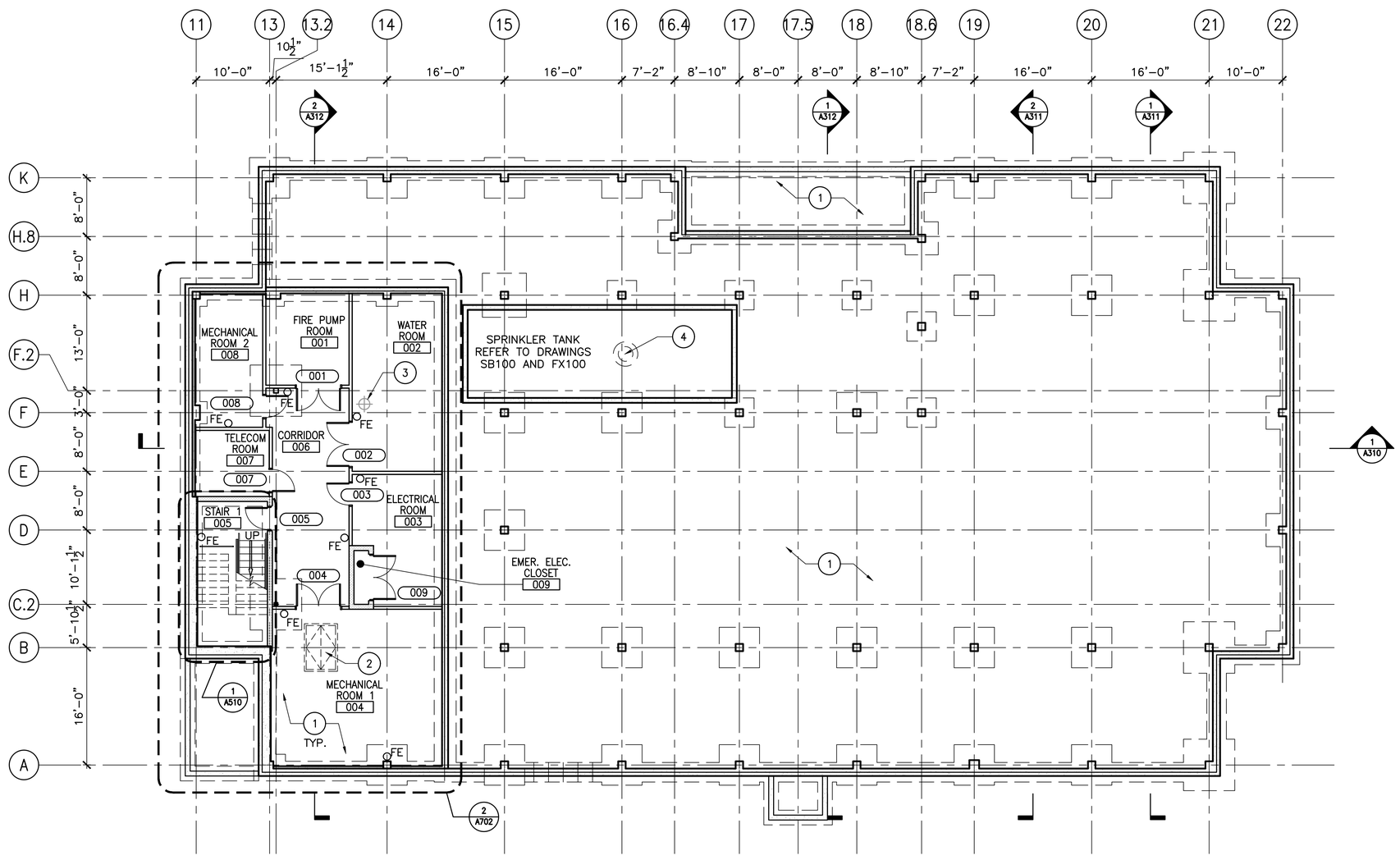

1 BASEMENT PLAN
1/8"=1'-0"

KEY NOTES

1. CONCRETE SLAB REFER TO SB100
2. MECHANICAL ROOM ACCESS FLOOR HATCH (ABOVE)
3. DRAIN TO SUMB PUMP REFER TO PL100
4. SPRINKLER TANK ACCESS MANHOLE

GENERAL NOTES

1. REFER TO STRUCTURAL DRAWINGS FOR FOUNDATION AND PIERS.

PROJECT KEY PLAN

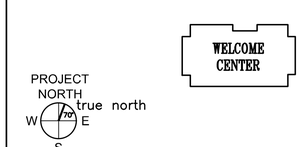

AECOM
1 FEDERAL STREET, 8TH FLOOR
BOSTON, MA 02110
617.723.1700
www.aecom.com

STATE OF MAINE
DEPARTMENT OF TRANSPORTATION

DATE

FED PIN NO: NA

WIN NO: 017163.02 & 017163.03

LICENSED ARCHITECT KARLA MICHELLE WENGLER No. 5292 STATE OF MAINE

SIGNATURE

ARCH. LIN. NUMBER ARC5292

DATE JANUARY 17, 2022

PROJECT INFORMATION	
PROGRAM	–
PROJECT MANAGER	–
DESIGNER	AECOM
CONSULTANT	–
PROJECT RESIDENT	–
CONTRACTOR	–
PROJECT COMPLETION DATE	–

MAINE DEPARTMENT OF TRANSPORTATION
ACADIA GATEWAY FACILITY
INTERMODAL AND WELCOME CENTER

BASEMENT PLAN

SHEET NUMBER
A201

\\na.aecomnet.com\lfs\AMER\Boston-USBOS01\DCS\Projects\TRN\60653001_MaineDOT_Acadia_Gateway\900_CAD_GIS\910_CAD\Sheet\A201.dwg Jan 17, 2022 - 3:03pm

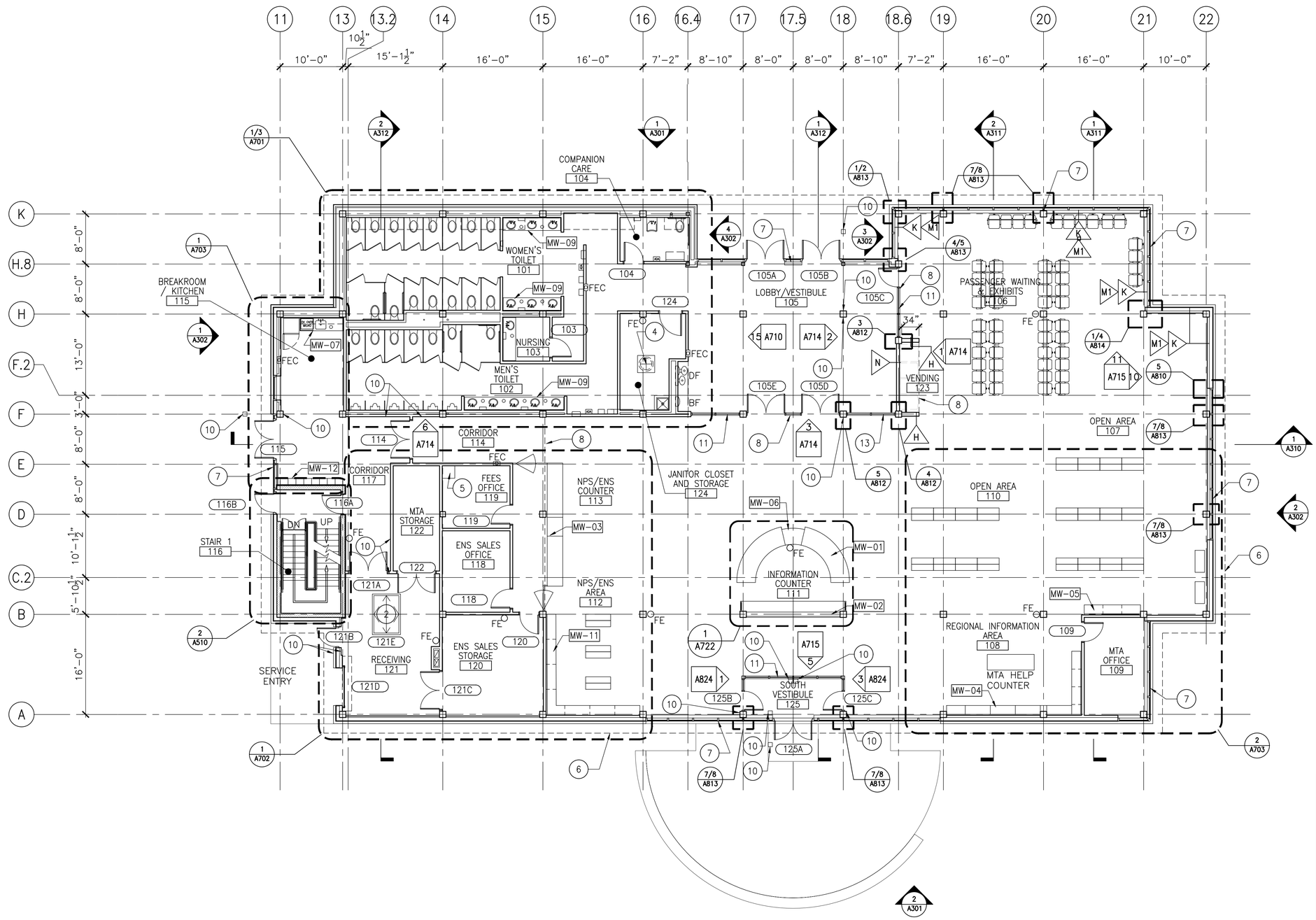

1 FIRST FLOOR PLAN
1/8"=1'-0"

KEY NOTES

2. MECHANICAL ROOM ACCESS FLOOR HATCH
4. SPRINKLER TANK ACCESS MANHOLE
5. 24"X24"X4"HIGH RAISED CONC. SLAB PLACED W/ CONC. SLAB FOR SAFE
6. EDGE OF ROOF OVERHANG
7. ALUMINUM CURTAINWALL SYSTEM
8. SOFFIT/WALL ABOVE
10. PUSH BUTTON AUTOMATIC DOOR OPENER
11. STEEL STOREFRONT

MW-01	INFORMATION DESK REFER TO SHEET A722 & A723
MW-02	INFORMATION DESK BACK COUNTER REFER TO SHEET A726
MW-03	RETAIL / BOOKSTORE COUNTER REFER TO SHEET A724 & A725
MW-04	REGIONAL IINFORMATION AREA, CNTR. REFER TO SHEET A727 & A728
MW-05	REGIONAL INFORMATION AREA, CNTR. REFER TO SHEET A727
MW-06	ACCESSIBLE COUNTER SECTION REFER TO SHEET A723
MW-07	KITCHEN COUNTER REFER TO SHEET A720
MW-09	BATHROOM LAV. COUNTERTOP, REFER TO SHEET A721
MW-10	BATHROOM COUNTERTOP, REFER TO SHEET A721
MW-11	RETAIL / BOOKSTORE CABINETS, REFER TO SHEET A727 & A728
MW-12	LOCKERS REFER TO SHEET A721

GENERAL NOTES

1. EXTERIOR WALL CONSTRUCTION ARE SIP'S (STRUCTURAL INSULATED PANELS) U.O.N., REFER TO STRUCTURAL DRAWINGS FOR ADDITIONAL INFORMATION.
2. ALL INTERIOR STAIR 1 PARTITIONS C.M.U., U.O.N.
3. REFER TO A830 & A831 FOR ALL PARTITION TYPES.

PROJECT KEY PLAN

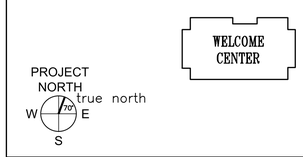

AECOM
1 FEDERAL STREET, 8TH FLOOR
BOSTON, MA 02110
617.723.1700
www.aecom.com

STATE OF MAINE
DEPARTMENT OF TRANSPORTATION

DATE

FED P/N NO: NA
WIN NO: 017163.02 & 017163.03

LICENSED ARCHITECT KAYLA MICHELLE WENGLER No. 5292 STATE OF MAINE

SIGNATURE

ARCH. LIN. NUMBER ARC5292

DATE JANUARY 17, 2022

PROJECT INFORMATION	
PROGRAM	-
PROJECT MANAGER	-
DESIGNER	AECOM
CONSULTANT	-
PROJECT RESIDENT	-
CONTRACTOR	-
PROJECT COMPLETION DATE	-

MAINE DEPARTMENT OF TRANSPORTATION
ACADIA GATEWAY FACILITY
INTERMODAL AND WELCOME CENTER

FIRST FLOOR PLAN

SHEET NUMBER
A202

\\na.aecomnet.com\lfs\AMER\Boston-USBOS01\DCS\Projects\TRN\60653001_MaineDOT_Acadia_Gateway\900_CAD_GIS\910_CAD\Sheet\A202.dwg Aug 23, 2022 - 9:39am

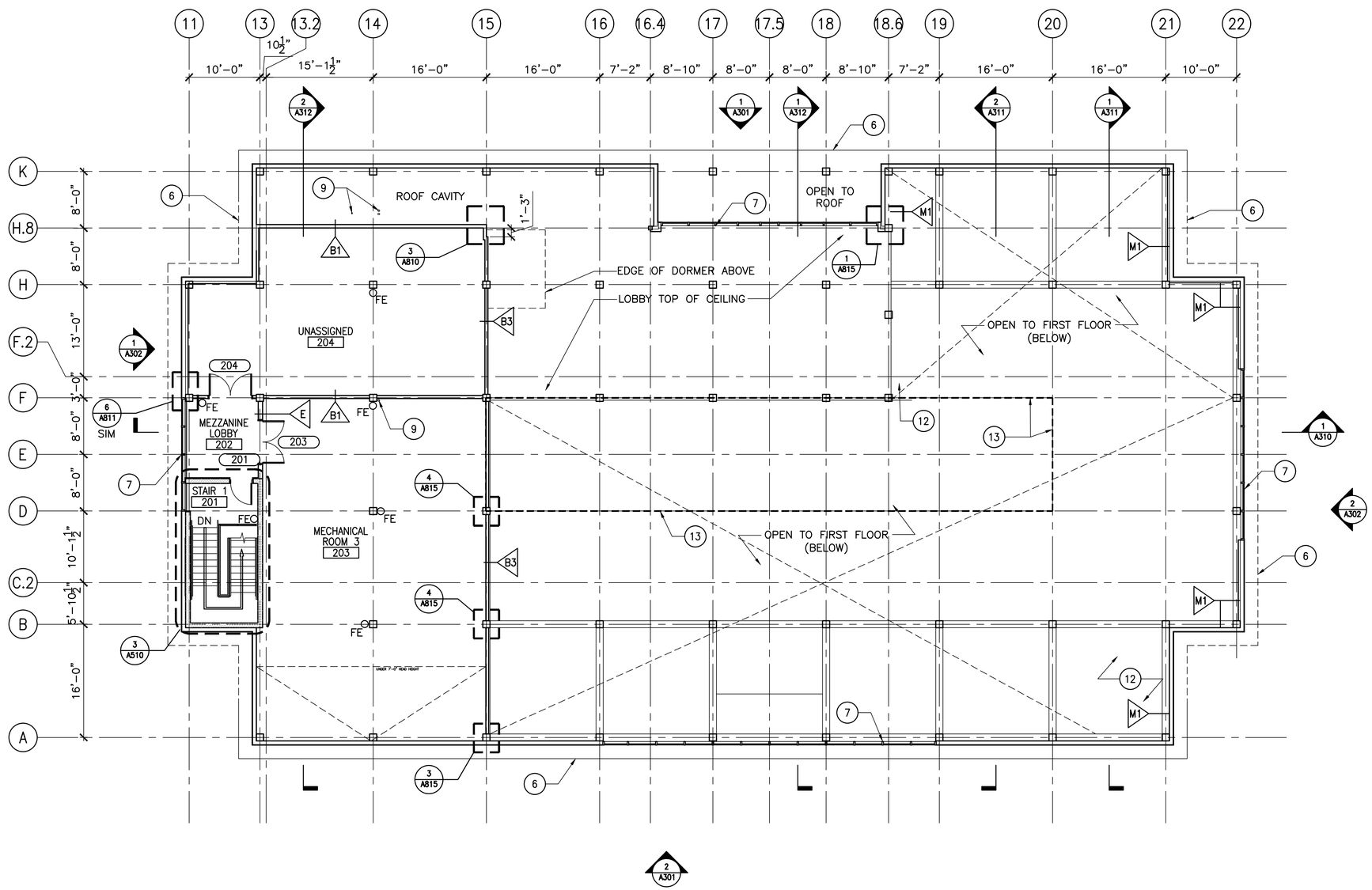

1 MEZZANINE PLAN
1/8"=1'-0"

KEY NOTES

6. EDGE OF ROOF OVERHANG
7. ALUMINUM CURTAINWALL SYSTEM
9. VENT PIPES REFER TO PL101 & PL103
12. WOOD TONGUE AND GROOVE DECK REFER TO A613
13. LIMIT OF TRANSLUCENT SKYLIGHT PANEL SYSTEM (ABOVE)

GENERAL NOTES

1. EXTERIOR WALL CONSTRUCTION ARE SIP'S (STRUCTURAL INSULATED PANELS) U.O.N., REFER TO STRUCTURAL DRAWINGS FOR ADDITIONAL INFORMATION.
2. ALL INTERIOR STAIR 1 PARTITIONS C.M.U., U.O.N.
3. REFER TO A830 & A831 FOR ALL PARTITION TYPES.

PROJECT KEY PLAN

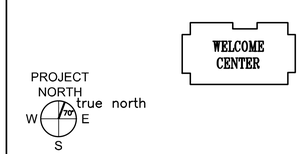

AECOM
1 FEDERAL STREET, 8TH FLOOR
BOSTON, MA 02110
617.723.1700
www.aecom.com

STATE OF MAINE
DEPARTMENT OF TRANSPORTATION

DATE

FED P/N NO: NA
WIN NO: 017163.02 & 017163.03

LICENSED ARCHITECT KAYLA MICHELLE WENGLER No. 5292 STATE OF MAINE

SIGNATURE
ARCH. LIN. NUMBER ARC5292
DATE JANUARY 17, 2022

PROJECT INFORMATION	
PROGRAM	–
PROJECT MANAGER	–
DESIGNER	AECOM
CONSULTANT	–
PROJECT RESIDENT	–
CONTRACTOR	–
PROJECT COMPLETION DATE	–

MAINE DEPARTMENT OF TRANSPORTATION
ACADIA GATEWAY FACILITY
INTERMODAL AND WELCOME CENTER

MEZZANINE PLAN

SHEET NUMBER
A203

\\na.aecomnet.com\lfs\AMER\Boston-USBOS01\DCS\Projects\TRN\60653001_MaineDOT_Acadia_Gateway\900_CAD_GIS\910_CAD\Sheet\A203.dwg Jan 17, 2022 - 3:05pm

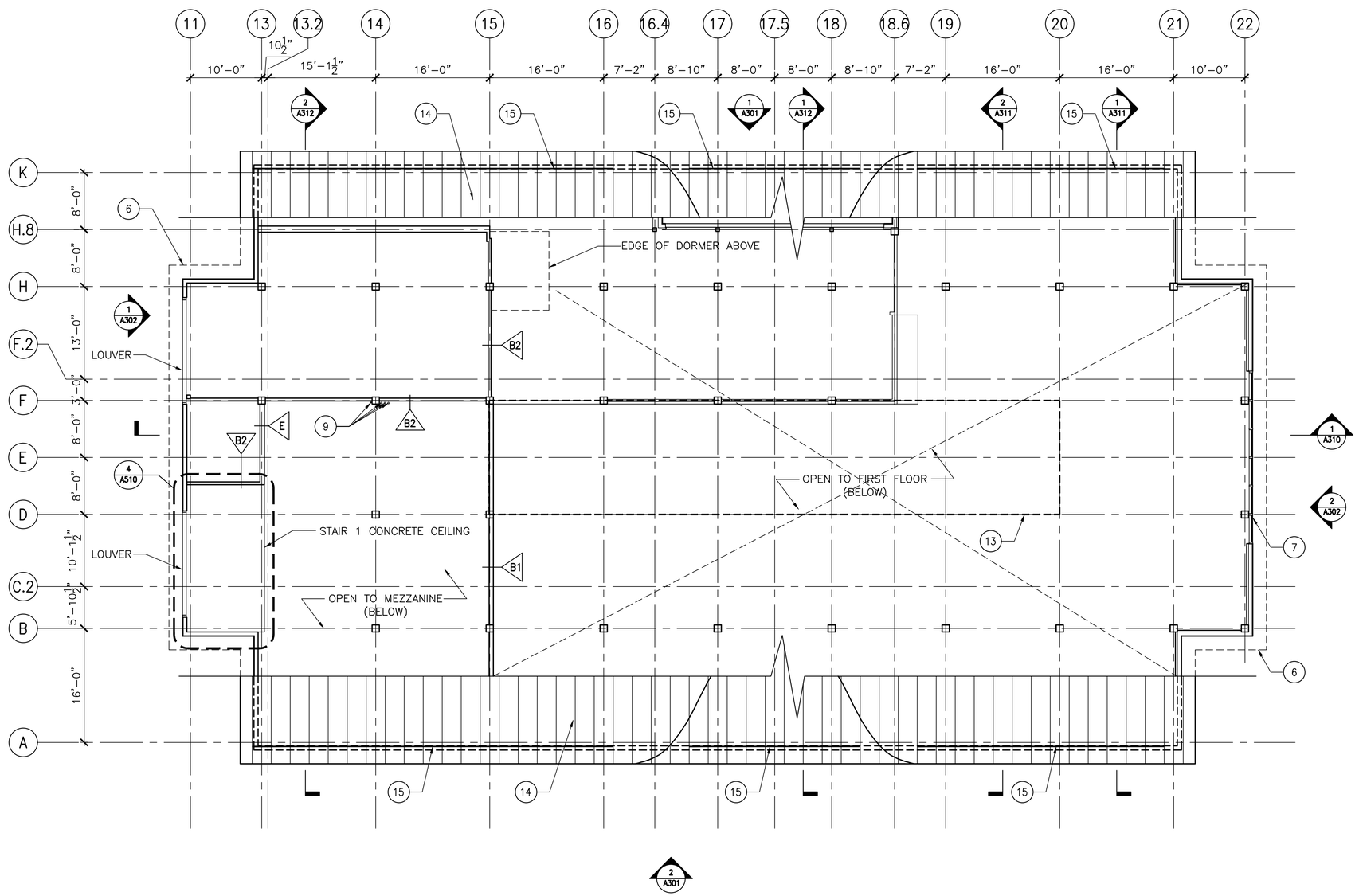

1 ATTIC FLOOR PLAN
1/8"=1'-0"

KEY NOTES

6. EDGE OF ROOF OVERHANG
7. ALUMINUM CURTAINWALL SYSTEM
9. VENT PIPES REFER TO PL101 & PL103
13. LIMIT OF TRANSLUCENT SKYLIGHT PANEL SYSTEM (ABOVE)
14. STANDING SEAM METAL ROOF COLOR AND MFR TBD
15. SNOW GUARD SYSTEM SEE SNOW GUARD DETAIL 8/A842

GENERAL NOTES

1. EXTERIOR WALL CONSTRUCTION ARE SIP'S (STRUCTURAL INSULATED PANELS) U.O.N., REFER TO STRUCTURAL DRAWINGS FOR ADDITIONAL INFORMATION.
2. REFER TO A830 & A831 FOR ALL PARTITION TYPES.

PROJECT KEY PLAN

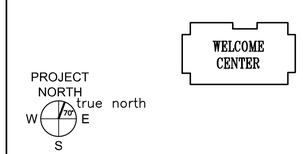

AECOM
1 FEDERAL STREET, 8TH FLOOR
BOSTON, MA 02110
617.723.1700
www.aecom.com

STATE OF MAINE
DEPARTMENT OF TRANSPORTATION

	DATE

FED PIN NO: NA
WIN NO: 017163.02 & 017163.03

LICENSED ARCHITECT KARLA MICHELLE WENGLER No. 5292 STATE OF MAINE

SIGNATURE
ARCH. LIN. NUMBER ARC5292
DATE JANUARY 17, 2022

PROJECT INFORMATION	
PROGRAM	-
PROJECT MANAGER	-
DESIGNER	AECOM
CONSULTANT	-
PROJECT RESIDENT	-
CONTRACTOR	-
PROJECT COMPLETION DATE	-

MAINE DEPARTMENT OF TRANSPORTATION
ACADIA GATEWAY FACILITY
INTERMODAL AND WELCOME CENTER

ATTIC FLOOR PLAN

SHEET NUMBER
A204

\\na.aecomnet.com\lfs\AMER\Boston-USBOS01\DCS\Projects\TRN\60653001_MaineDOT_Acadia_Gateway\900_CAD_GIS\910_CAD\Sheet\A204.dwg Jan 19, 2022 - 10:02am

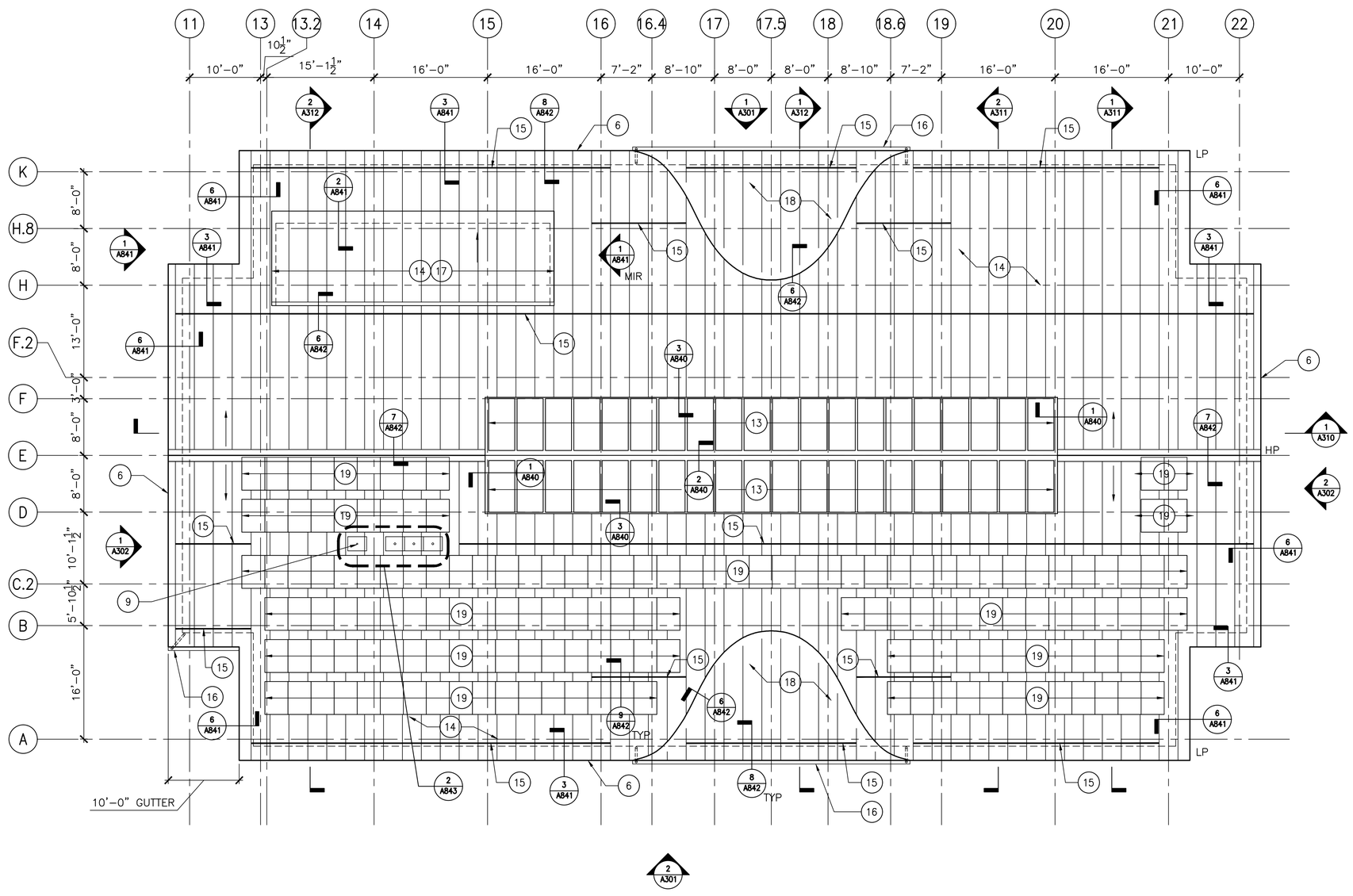

1 ROOF PLAN
1/8"=1'-0"

KEY NOTES

6 EDGE OF ROOF OVERHANG
8 SOFFIT/WALL ABOVE
9 VENT PIPES
REFER TO PL101 & PL103
13 TRANSLUCENT SKYLIGHT PANEL SYSTEM
14 STANDING SEAM METAL ROOF
COLOR AND MFR TBD
15 SNOW GUARD SYSTEM
SEE SNOW GUARD DETAIL 8/A842
16 GUTTER SYSTEM W/ DOWN SPOUT
17 SHED DORMER
18 CURVED GABLE
19 PHOTOVOLTAIC ARRAY

GENERAL NOTES

1. EXTERIOR WALL CONSTRUCTION ARE SIP'S (STRUCTURAL INSULATED PANELS) U.O.N., REFER TO STRUCTURAL DRAWINGS FOR ADDITIONAL INFORMATION.

PROJECT KEY PLAN

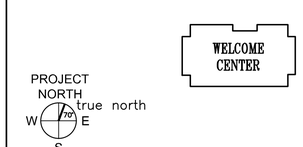

AECOM
1 FEDERAL STREET, 8TH FLOOR
BOSTON, MA 02110
617.723.1700
www.aecom.com

STATE OF MAINE
DEPARTMENT OF TRANSPORTATION

DATE	
FED PIN NO: NA	
WIN NO: 017163.02 & 017163.03	

LICENSED ARCHITECT KATLA MICHELLE WENGLER No. 5292 STATE OF MAINE

SIGNATURE

ARCH. LIN. NUMBER ARC5292

DATE JANUARY 17, 2022

PROJECT INFORMATION	
PROGRAM	–
PROJECT MANAGER	–
DESIGNER	AECOM
CONSULTANT	–
PROJECT RESIDENT	–
CONTRACTOR	–
PROJECT COMPLETION DATE	–

MAINE DEPARTMENT OF TRANSPORTATION
ACADIA GATEWAY FACILITY
INTERMODAL AND WELCOME CENTER

ROOF PLAN

SHEET NUMBER
A205

\\na.aecomnet.com\lfs\AMER\Boston-USBOS01\DCS\Projects\TRN\60653001_MaineDOT_Acadia_Gateway\900_CAD_GIS\910_CAD\Sheet\A205.dwg Jan 19, 2022 - 10:11am

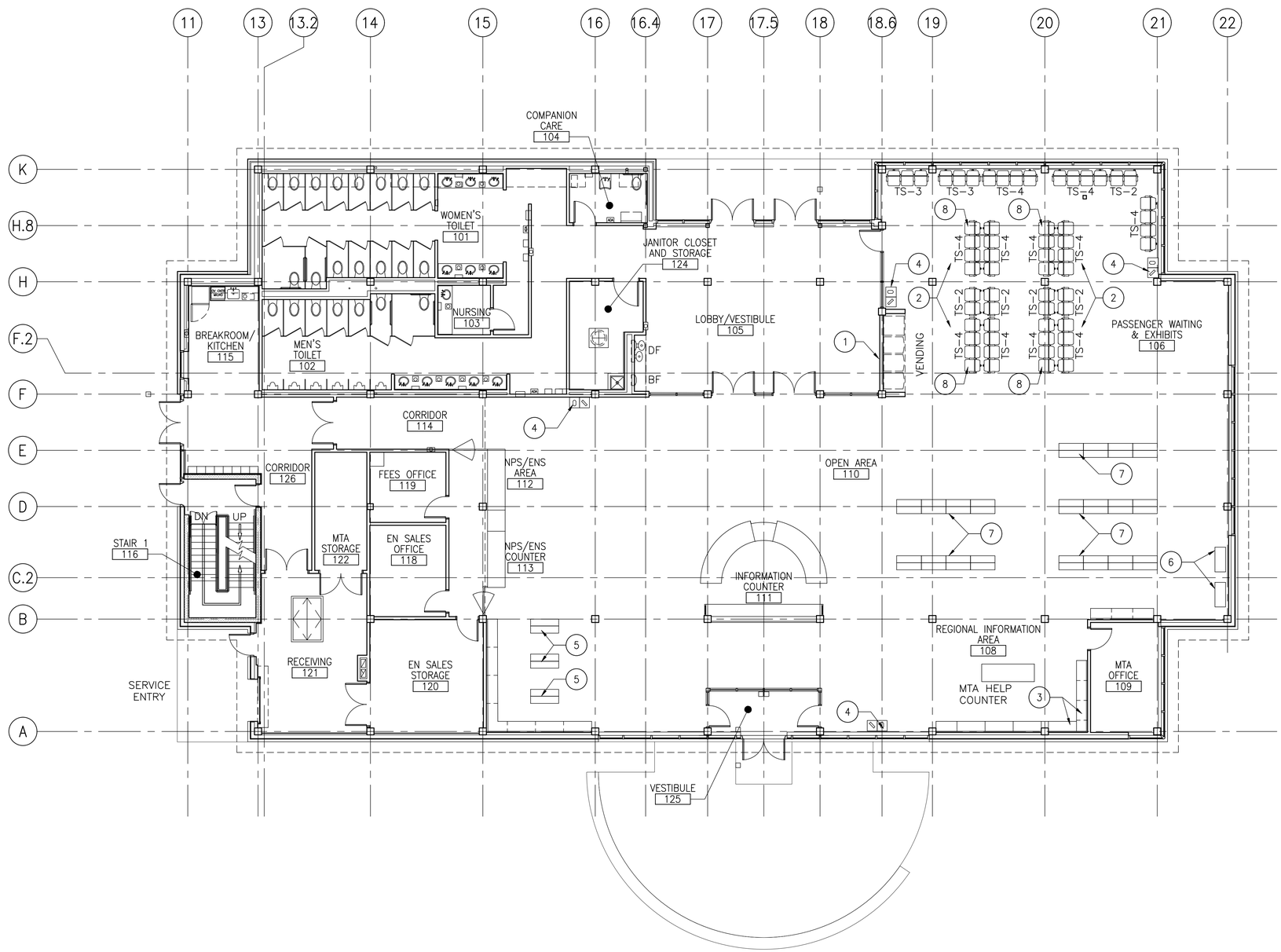

1 FIRST FLOOR FURNITURE PLAN
1/8"=1'-0"

FOR REFERENCE ONLY

FURNITURE KEY NOTES

1. INTERPRETIVE EXHIBIT (DISPLAY), REFER TO SG108
2. RTA SEATING, SEE FURNITURE SPECIFICATIONS FOR MORE INFO
3. TELEPHONES AT COUNTERTOP, N.I.C.
4. TRASH & RECYCLE CONTAINERS, N.I.C.
5. LOW HEIGHT BOOK SHELVES (N.I.C.)
6. DIGITAL KIOSKS (N.I.C.)
7. PUBLICATION RACKS (N.I.C.)
8. ADA ACCESSIBLE SEATING LOCATION, SEE FURNITURE SPECIFICATIONS FOR MORE INFO

GENERAL NOTES

1. SEE FURNITURE SPECIFICATIONS FOR MORE INFO.

PROJECT KEY PLAN

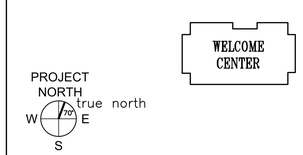

AECOM
1 FEDERAL STREET, 8TH FLOOR
BOSTON, MA 02110
617.723.1700
www.aecom.com

STATE OF MAINE
DEPARTMENT OF TRANSPORTATION

	DATE

FED P/N NO: NA
WIN NO: 017163.02 & 017163.03

LICENSED ARCHITECT KATLA MICHELLE WENGLER No. 5292 STATE OF MAINE

SIGNATURE

ARCH. LIN. NUMBER ARC5292

DATE JANUARY 17, 2022

PROJECT INFORMATION	
PROGRAM	–
PROJECT MANAGER	–
DESIGNER	AECOM
CONSULTANT	–
PROJECT RESIDENT	–
CONTRACTOR	–
PROJECT COMPLETION DATE	–

MAINE DEPARTMENT OF TRANSPORTATION
ACADIA GATEWAY FACILITY
INTERMODAL AND WELCOME CENTER

FIRST FLOOR FURNITURE PLAN

SHEET NUMBER
A206

\\na.aecomnet.com\lfs\AMER\Boston-USBOS01\DCS\Projects\TRN\60653001_MaineDOT_Acadia_Gateway\900_CAD_GIS\910_CAD\Sheet\A206.dwg Sep 08, 2022 - 1:36pm

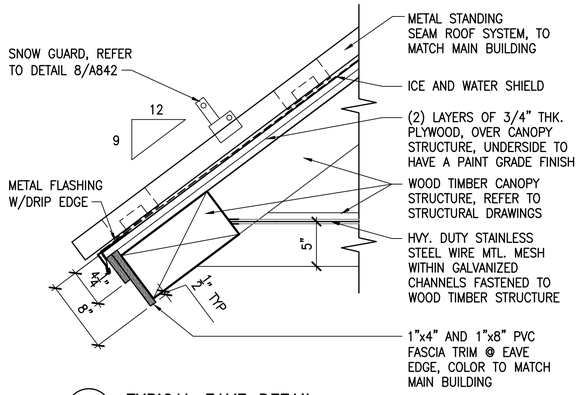

9 TYPICAL EAVE DETAIL
1 1/2"=1'-0"

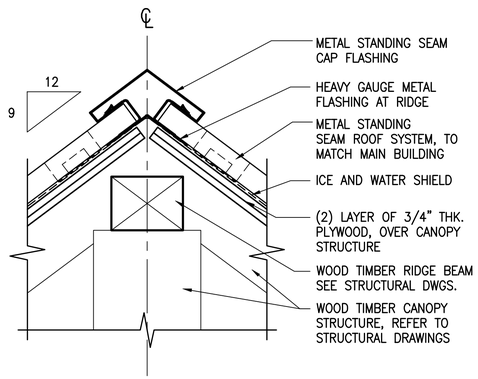

10 ROOF RIDGE DETAIL
1 1/2"=1'-0"

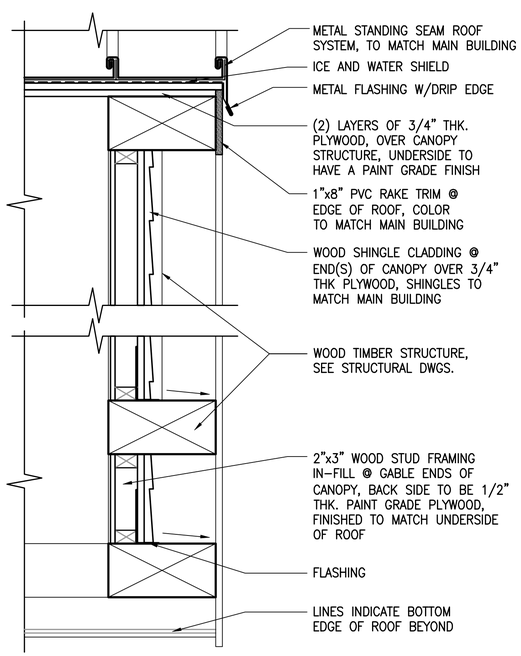

11 GABLE END DETAIL
1 1/2"=1'-0"

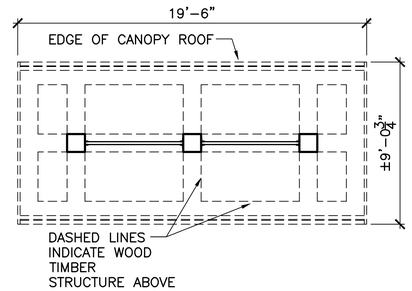

5 INFORMATION KIOSK PLAN
1/4"=1'-0"

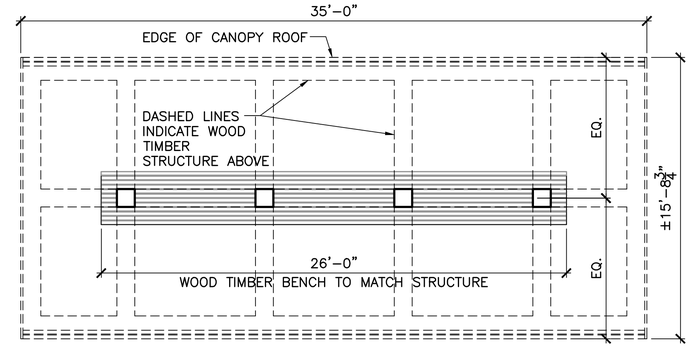

1 BUS CANOPY PLAN
1/4"=1'-0"

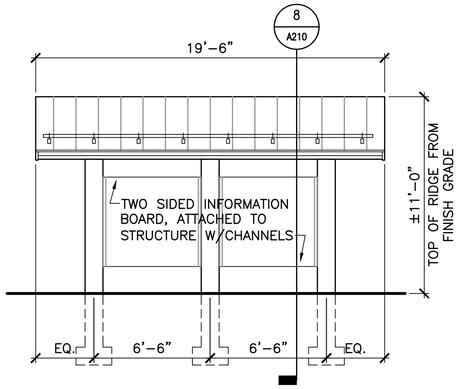

6 INFORMATION KIOSK ELEVATION
1/4"=1'-0"

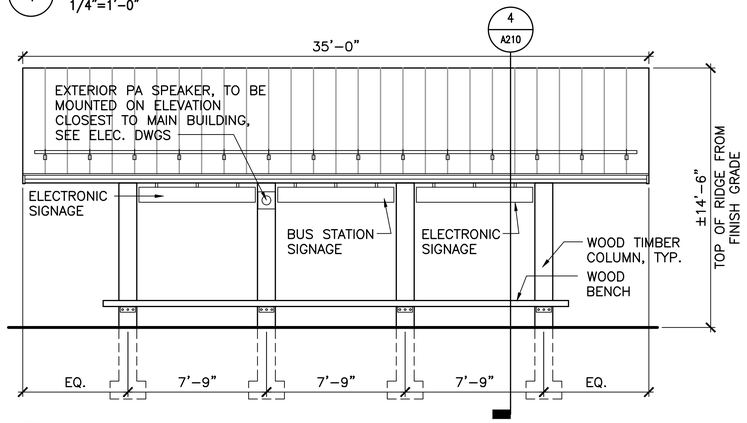

2 BUS CANOPY ELEVATION
1/4"=1'-0"

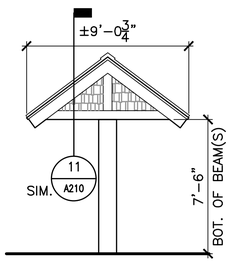

7 INFORMATION KIOSK END ELEV.
1/4"=1'-0"

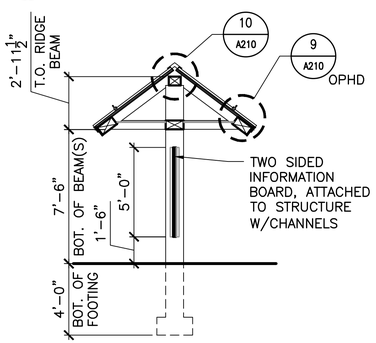

8 SECTION @ INFORMATION KIOSK
1/4"=1'-0"

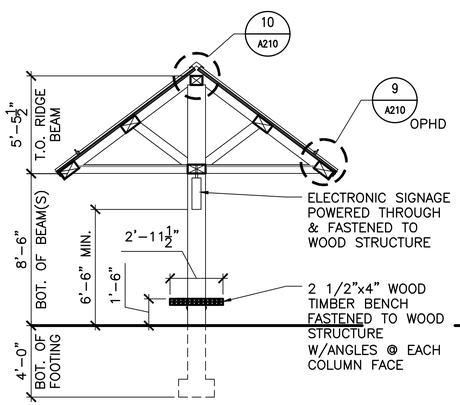

4 SECTION @ BUS CANOPY
1/4"=1'-0"

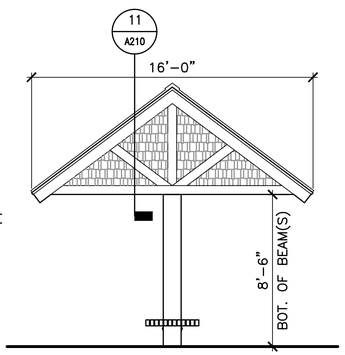

3 BUS CANOPY END ELEVATION
1/4"=1'-0"

GENERAL NOTES

PROJECT KEY PLAN

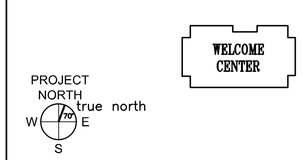

AECOM
1 FEDERAL STREET, 8TH FLOOR
BOSTON, MA 02110
617.723.1700
www.aecom.com

STATE OF MAINE
DEPARTMENT OF TRANSPORTATION

DATE

FED PIN NO: NA
WIN NO: 017163.02 & 017163.03

LICENSED ARCHITECT KARLA MICHELLE WENGLER No. 5292 STATE OF MAINE

PROJECT INFORMATION	
PROGRAM	–
PROJECT MANAGER	–
DESIGNER	AECOM
CONSULTANT	–
PROJECT RESIDENT	–
CONTRACTOR	–
PROJECT COMPLETION DATE	–

SIGNATURE
ARCH. LIN. NUMBER ARC5292
DATE JANUARY 17, 2022

MAINE DEPARTMENT OF TRANSPORTATION
ACADIA GATEWAY FACILITY
INTERMODAL AND WELCOME CENTER

BUS CANOPY AND INFORMATION KIOSK

SHEET NUMBER
A210

\\na.aecomnet.com\fs\AMER\Boston-USBOS01\DCS\Projects\TRN\60653001_MaineDOT_Acadia_Gateway\900_CAD_GIS\910_CAD\Sheet\A210.dwg Jan 17, 2022 - 3:07pm

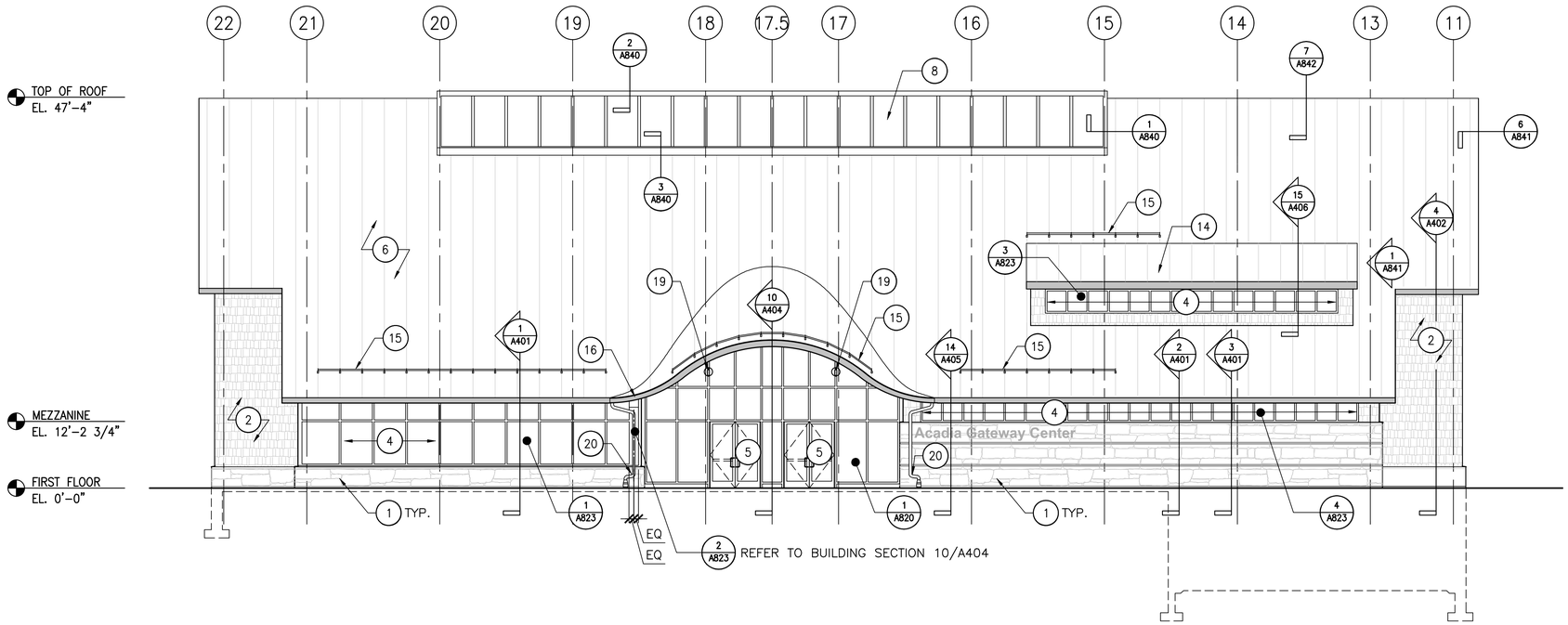

1 NORTH EXTERIOR ELEVATION
1/8"=1'-0"

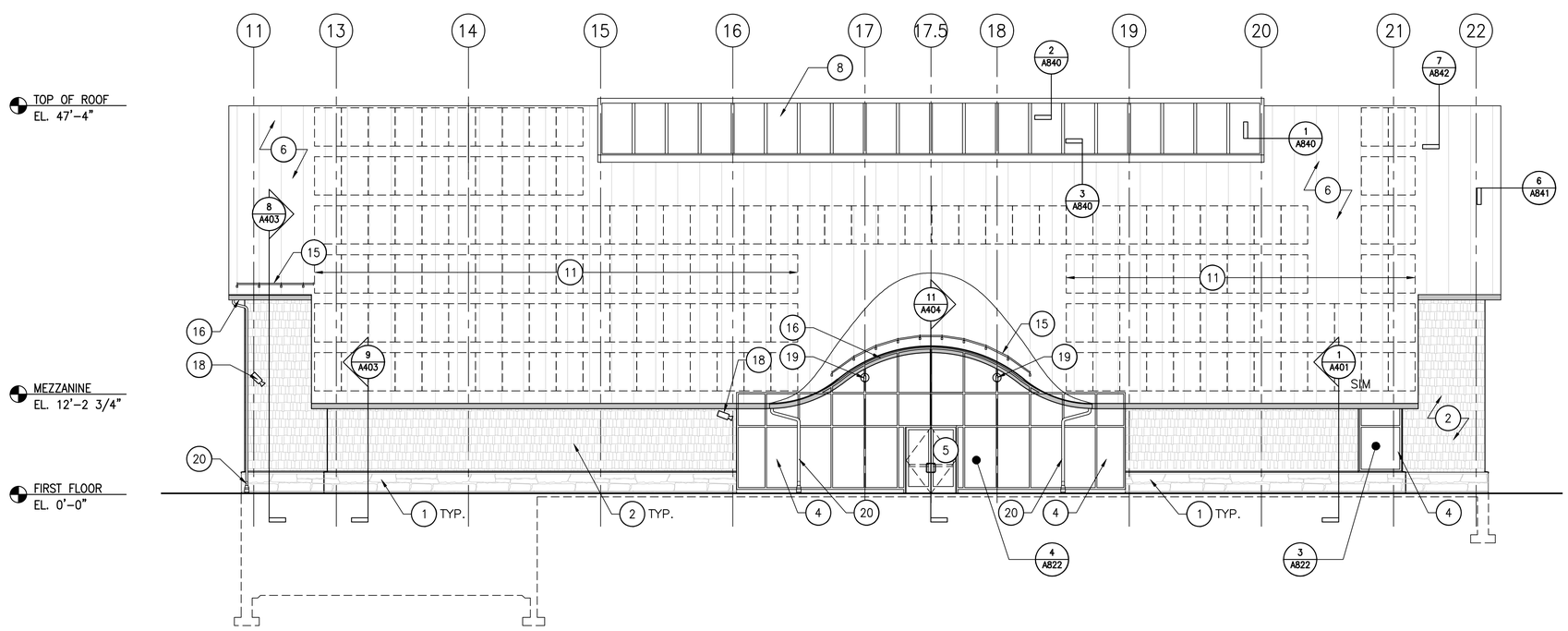

2 SOUTH EXTERIOR ELEVATION
1/8"=1'-0"

ELEVATION KEY NOTES

1. STONE VENEER
2. CEDAR WOOD SHINGLES (8" EXPOSURE)
4. ALUMINUM CURTAIN WALL SYSTEM
5. ALUMINUM ENTRANCE
6. STANDING SEAM METAL ROOF
8. TRANSLUCENT SKYLIGHT PANEL SYSTEM
11. PHOTOVOLTAIC ARRAY
14. SHED DORMER
15. SNOW GUARD SYSTEM SEE SNOW GUARD DETAIL 8/A842
16. GUTTER SYSTEM W/ DOWN SPOUT
18. SECURITY CAMERA
19. FLOOD LIGHT
20. DOWNSPOUT, HELD CLOSE TO BUILDING, TERMINATED AT STORM DRAIN CONNECTION IN RIVER ROCK; SEE CIVIL FOR CONNECTION. ALIGN VERTICAL RUNS AGAINST BUILDING AS SHOWN. LOCATE SYMMETRICALLY BY FACE AS SHOWN.

GENERAL NOTES

PROJECT KEY PLAN

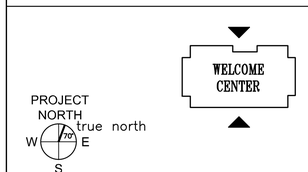

AECOM
1 FEDERAL STREET, 8TH FLOOR
BOSTON, MA 02110
617.723.1700
www.aecom.com

STATE OF MAINE
DEPARTMENT OF TRANSPORTATION

DATE	
FED PIN NO: NA	
WIN NO: 017163.02 & 017163.03	

LICENSED ARCHITECT KATYA MICHELLE WENGLER No. 5292 STATE OF MAINE

PROJECT INFORMATION		
PROGRAM	-	
PROJECT MANAGER	-	SIGNATURE
DESIGNER	AECOM	
CONSULTANT	-	ARCH. LIN. NUMBER ARC5292
PROJECT RESIDENT	-	
CONTRACTOR	-	DATE JANUARY 17, 2022
PROJECT COMPLETION DATE	-	

MAINE DEPARTMENT OF TRANSPORTATION
ACADIA GATEWAY FACILITY
INTERMODAL AND WELCOME CENTER

EXTERIOR ELEVATIONS I

SHEET NUMBER
A301

\\na.aecomnet.com\lfs\AMER\Boston-USBOS01\DCS\Projects\TRN\60653001_MaineDOT_Acadia_Gateway\900_CAD_GIS\910_CAD\Sheet\A301.dwg Jan 27, 2022 - 11:30am

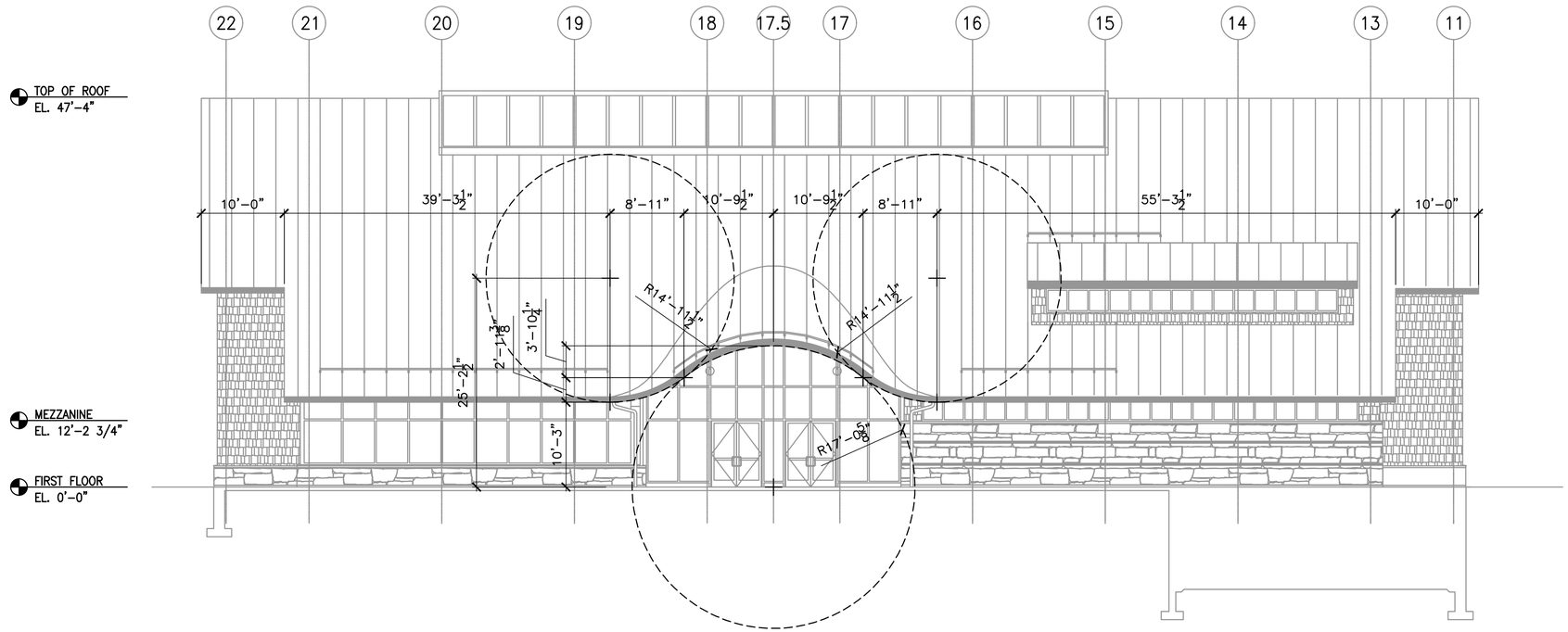

1 NORTH EXTERIOR ELEVATION GEOMETRY
1/8"=1'-0"

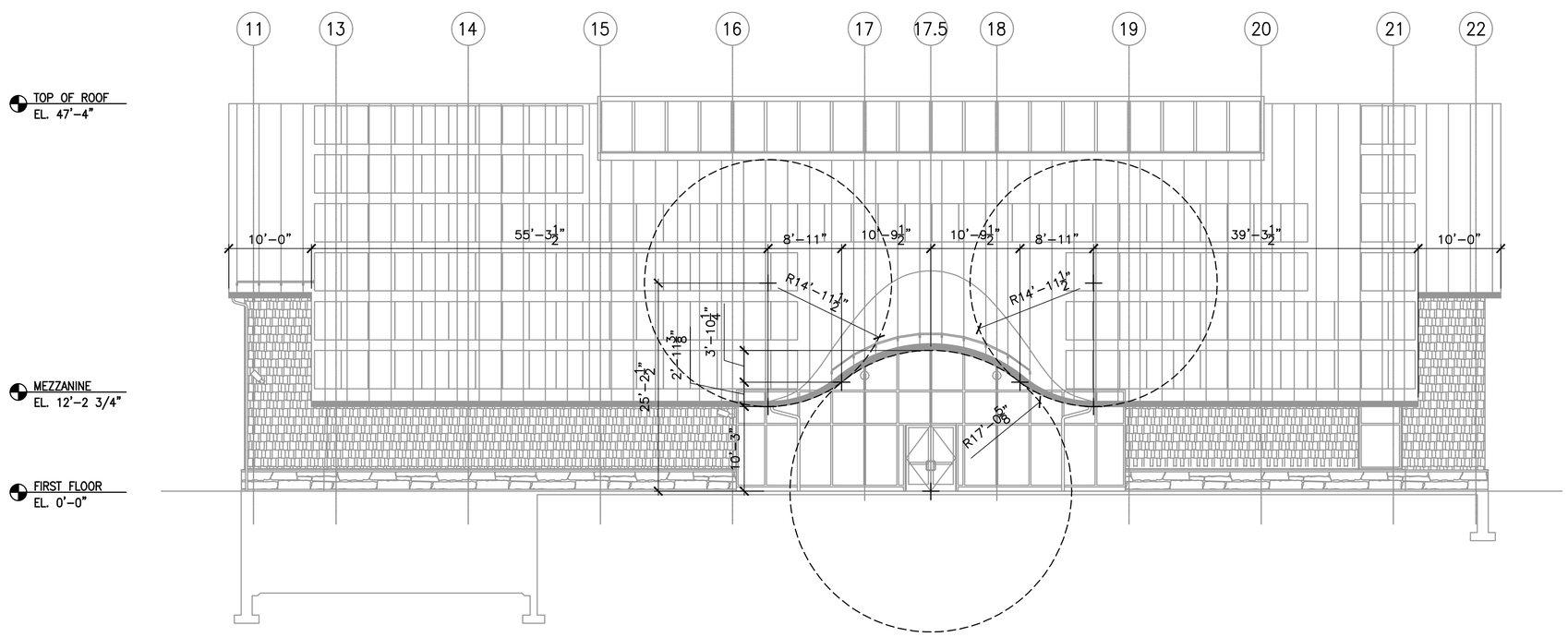

2 SOUTH EXTERIOR ELEVATION GEOMTERY
1/8"=1'-0"

ELEVATION SYMBOLS

WORK POINT

ARC DEFINING CIRCLE

GENERAL NOTES

PROJECT KEY PLAN

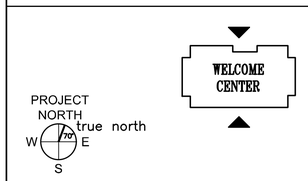

AECOM
1 FEDERAL STREET, 8TH FLOOR
BOSTON, MA 02110
617.723.1700
www.aecom.com

STATE OF MAINE
DEPARTMENT OF TRANSPORTATION

DATE

FED PIN NO: NA

WIN NO: 017163.02 & 017163.03

LICENSED ARCHITECT KAYLA MICHELLE WENGLER No. 5292 STATE OF MAINE

SIGNATURE

ARCH. LIN. NUMBER ARC5292

DATE JANUARY 17, 2022

PROJECT INFORMATION	
PROGRAM	–
PROJECT MANAGER	–
DESIGNER	AECOM
CONSULTANT	–
PROJECT RESIDENT	–
CONTRACTOR	–
PROJECT COMPLETION DATE	–

MAINE DEPARTMENT OF TRANSPORTATION
ACADIA GATEWAY FACILITY
INTERMODAL AND WELCOME CENTER

EXTERIOR ELEVS I GEOMETRY

SHEET NUMBER
A301a

\\na.aecomnet.com\lfs\AMER\Boston-USBOS01\DCS\Projects\TRN\60653001_MaineDOT_Acadia_Gateway\900_CAD_GIS\910_CAD\Sheet\A301a.dwg Jan 17, 2022 - 3:10pm

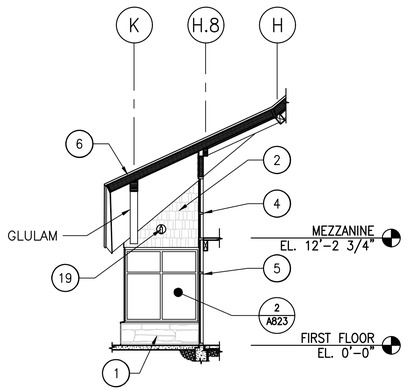

3 WEST EXTERIOR ELEVATION AT LOBBY
1/8"=1'-0"

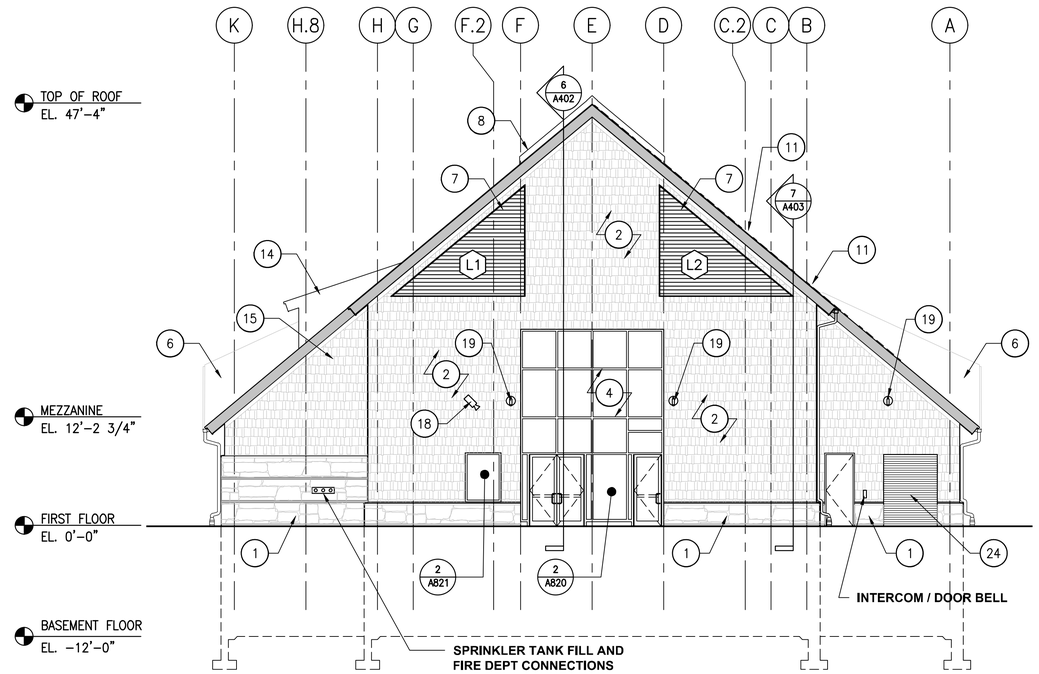

1 WEST EXTERIOR ELEVATION
1/8"=1'-0"

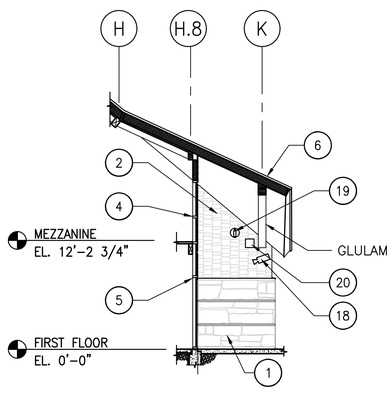

4 EAST EXTERIOR ELEVATION AT LOBBY
1/8"=1'-0"

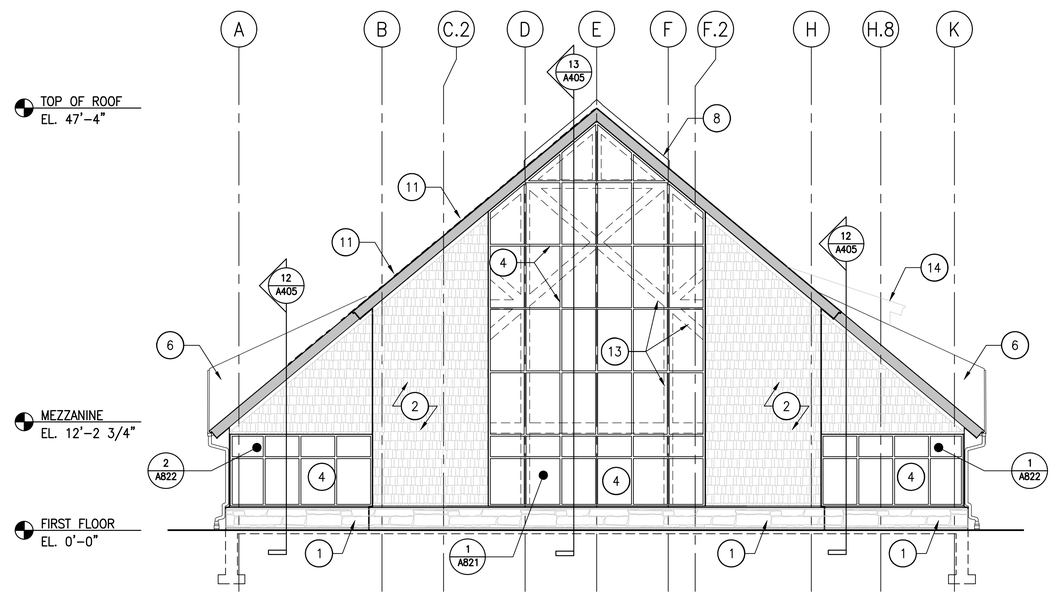

2 EAST EXTERIOR ELEVATION
1/8"=1'-0"

ELEVATION KEY NOTES

1. STONE VENEER
2. CEDAR WOOD SHINGLES (8" EXPOSURE)
4. ALUMINUM CURTAIN WALL SYSTEM
5. ALUMINUM ENTRANCE
6. STANDING SEAM METAL ROOF
7. METAL LOUVER
8. TRANSLUCENT SKYLIGHT PANEL SYSTEM
11. PHOTOVOLTAIC ARRAY
13. WOOD STRUCTURE BEYOND
14. SHED DORMER
15. SIGN – "FIRE DEPARTMENT CONNECTION BELOW"
18. SECURITY CAMERA
19. FLOOD LIGHT
20. PA SPEAKER, SEE ELEC. DWGS
24. ROLLUP DOOR

GENERAL NOTES

PROJECT KEY PLAN

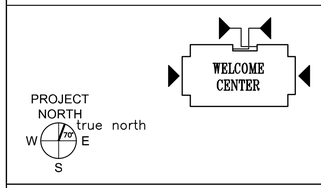

AECOM
1 FEDERAL STREET, 8TH FLOOR
BOSTON, MA 02110
617.723.1700
www.aecom.com

STATE OF MAINE
DEPARTMENT OF TRANSPORTATION

	DATE

FED PIN NO: NA
WIN NO: 017163.02 & 017163.03

LICENSED ARCHITECT
KAYLA MICHELLE WENGLER
No. 5292
STATE OF MAINE

SIGNATURE
ARCH. LIN. NUMBER ARC5292
DATE JANUARY 17, 2022

PROJECT	INFORMATION
PROGRAM	–
PROJECT MANAGER	–
DESIGNER	AECOM
CONSULTANT	–
PROJECT RESIDENT	–
CONTRACTOR	–
PROJECT COMPLETION DATE	–

MAINE DEPARTMENT OF TRANSPORTATION
ACADIA GATEWAY FACILITY
INTERMODAL AND WELCOME CENTER

EXTERIOR ELEVATIONS II

SHEET NUMBER
A302

\\na.aecomnet.com\lfs\AMER\Boston-USBOS01\DCS\Projects\TRN\60653001_MaineDOT_Acadia_Gateway\900_CAD_GIS\910_CAD\Sheet\A302.dwg Jan 26, 2022 - 8:53pm

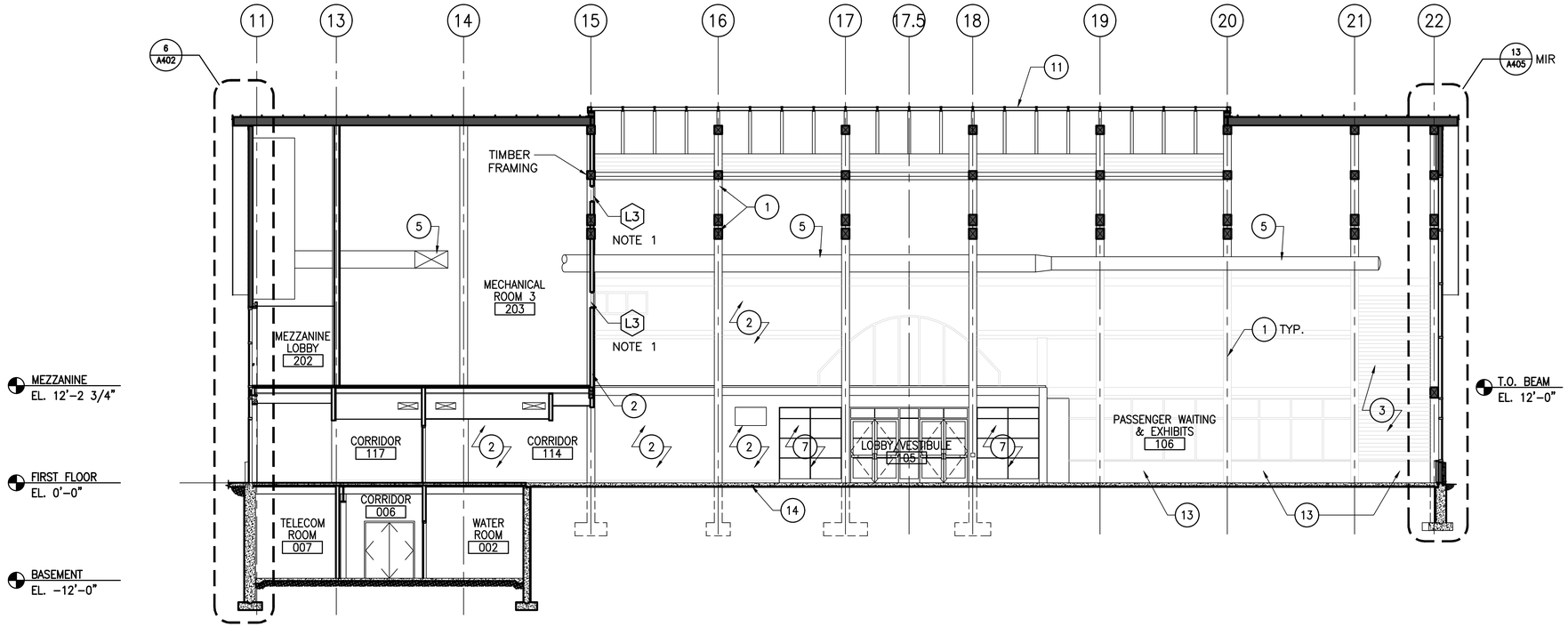

1 BUILDING SECTION
1/8"=1'-0"

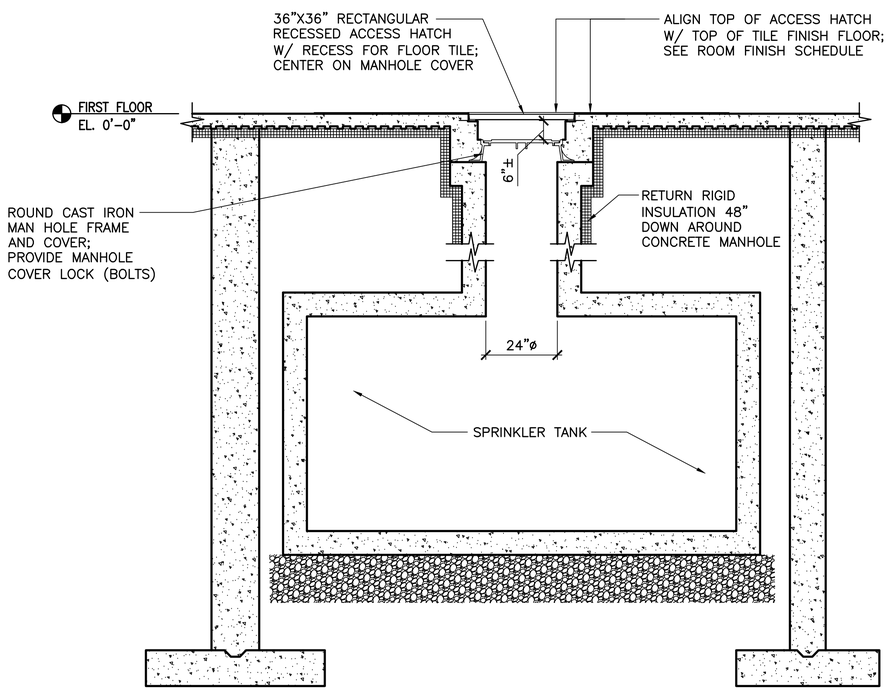

3 SPRINKLER TANK MANHOLE ACCESS SECTION
1/2"=1'-0"

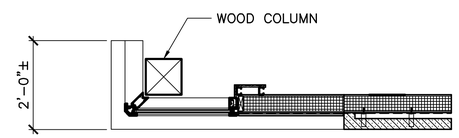

3 MOCK-UP PLAN
1/2"=1'-0"

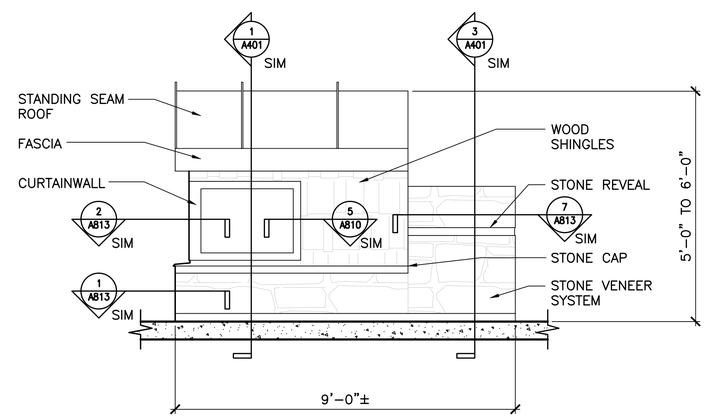

2 MOCK-UP ELEVATION
1/2"=1'-0"

SECTION KEY NOTES

1. DOUGLAS FIR STRUCTURE, REFER TO STRUCTURAL
2. PAINTED GWB
3. ACOUSTIC WOOD LOOKS PANEL
4. WOOD SLAT WALL
5. HVAC DUCT, REFER TO HVAC DRAWINGS
6. SUSPENDED CEILING SYSTEM
7. STOREFRONT SYSTEM
11. TRANSLUCENT SKYLIGHT PANEL SYSTEM
13. INTERIOR STONE VENEER
14. CONCRETE SLAB ON GRADE

GENERAL NOTES

1. COORDINATE INTERIOR RETURN AIR GRILLE (L3) LOCATIONS W/ SHEETS MH102 AND MH103. GRILLES SHALL BE CENTERED ON GRID LINE E AND CLEAR TIMBER FRAMING.

PROJECT KEY PLAN

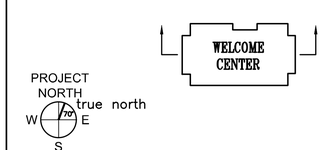

AECOM
1 FEDERAL STREET, 8TH FLOOR
BOSTON, MA 02110
617.723.1700
www.aecom.com

STATE OF MAINE
DEPARTMENT OF TRANSPORTATION

DATE

FED PIN NO: NA
WIN NO: 017163.02 & 017163.03

LICENSED ARCHITECT KATLA MICHELLE WENGLER No. 5292 STATE OF MAINE

SIGNATURE
ARCH. LIN. NUMBER ARC5292
DATE JANUARY 17, 2022

PROJECT INFORMATION	
PROGRAM	-
PROJECT MANAGER	-
DESIGNER	AECOM
CONSULTANT	-
PROJECT RESIDENT	-
CONTRACTOR	-
PROJECT COMPLETION DATE	-

MAINE DEPARTMENT OF TRANSPORTATION
ACADIA GATEWAY FACILITY
INTERMODAL AND WELCOME CENTER

BUILDING SECTIONS I

SHEET NUMBER
A310

\\na.aecomnet.com\lfs\AMER\Boston-USBDS01\DCS\Projects\TRN\60653001_MaineDOT_Acadia_Gateway\900_CAD_GIS\910_CAD\Sheet\A310.dwg Jan 17, 2022 - 3:12pm

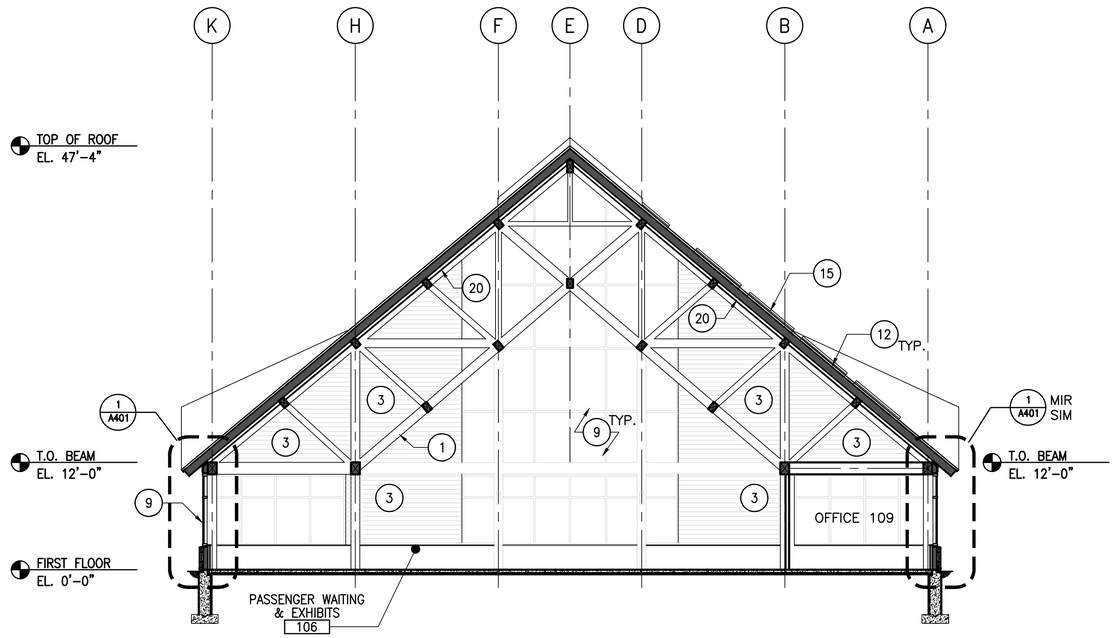

1 BUILDING SECTION
1/8"=1'-0"

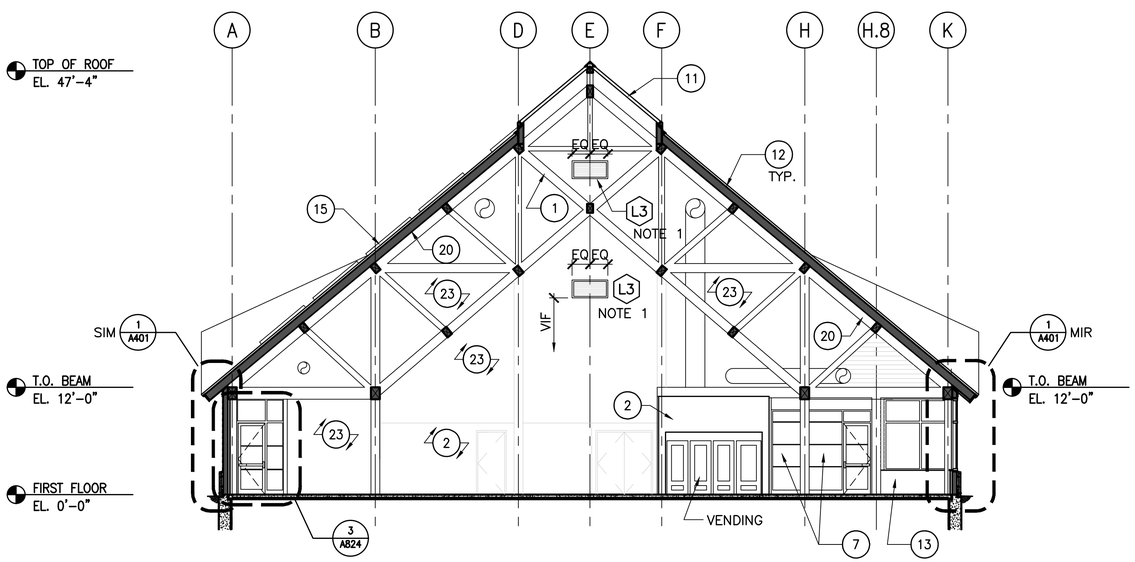

2 BUILDING SECTION
1/8"=1'-0"

SECTION KEY NOTES

1. DOUGLAS FIR STRUCTURE, REFER TO STRUCTURAL
2. PAINTED GWB
3. ACOUSTIC WOOD LOOKS PANEL
4. WOOD SLAT WALL
7. STOREFRONT SYSTEM
9. ALUMINUM CURTAIN WALL SYSTEM
11. TRANSLUCENT SKYLIGHT PANEL SYSTEM
12. METAL ROOF SYSTEM ON SIP'S (STRUCTURAL INSULATED PANELS)
13. INTERIOR STONE VENEER
15. PHOTOVOLTAIC ARRAY
20. WOOD CEILING SYSTEM
21. COLUMN MOUNTED LIGHT FIXTURE
22. WOOD FINISH SLATWALL
23. ACOUSTIC PLASTER WALL SURFACE

GENERAL NOTES

1. COORDINATE INTERIOR RETURN AIR GRILLE (L3) LOCATIONS W/ SHEETS MH102 AND MH103. GRILLES SHALL BE CENTERED ON GRID LINE E AND CLEAR TIMBER FRAMING.

PROJECT KEY PLAN

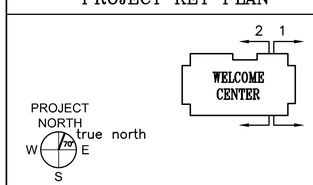

AECOM
1 FEDERAL STREET, 8TH FLOOR
BOSTON, MA 02110
617.723.1700
www.aecom.com

STATE OF MAINE
DEPARTMENT OF TRANSPORTATION

	DATE

FED PIN NO: NA
WIN NO: 017163.02 & 017163.03

LICENSED ARCHITECT KATYA MICHELLE WENGLER No. 5292 STATE OF MAINE

SIGNATURE

ARCH. LIN. NUMBER ARC5292

DATE JANUARY 17, 2022

PROJECT INFORMATION	
PROGRAM	-
PROJECT MANAGER	-
DESIGNER	AECOM
CONSULTANT	-
PROJECT RESIDENT	-
CONTRACTOR	-
PROJECT COMPLETION DATE	-

MAINE DEPARTMENT OF TRANSPORTATION
ACADIA GATEWAY FACILITY
INTERMODAL AND WELCOME CENTER

BUILDING SECTIONS II

SHEET NUMBER
A311

\\na.aecomnet.com\lfs\AMER\Boston-USBOS01\DCS\Projects\TRN\60653001_MaineDOT_Acadia_Gateway\900_CAD_GIS\910_CAD\Sheet\A311.dwg Jan 17, 2022 - 3:12pm

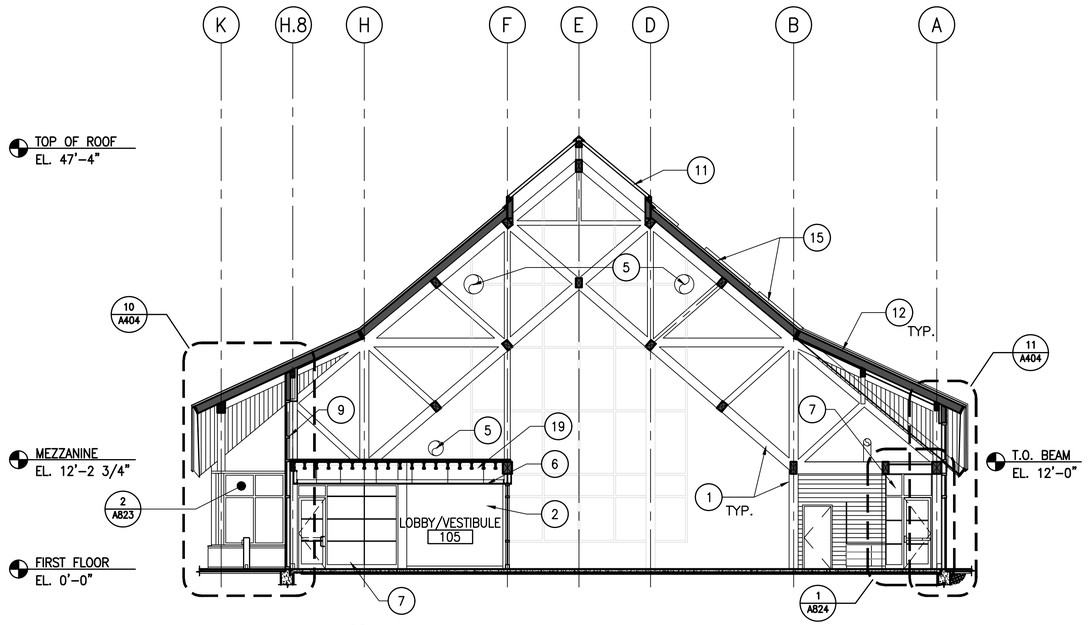

1 BUILDING SECTION
1/8"=1'-0"

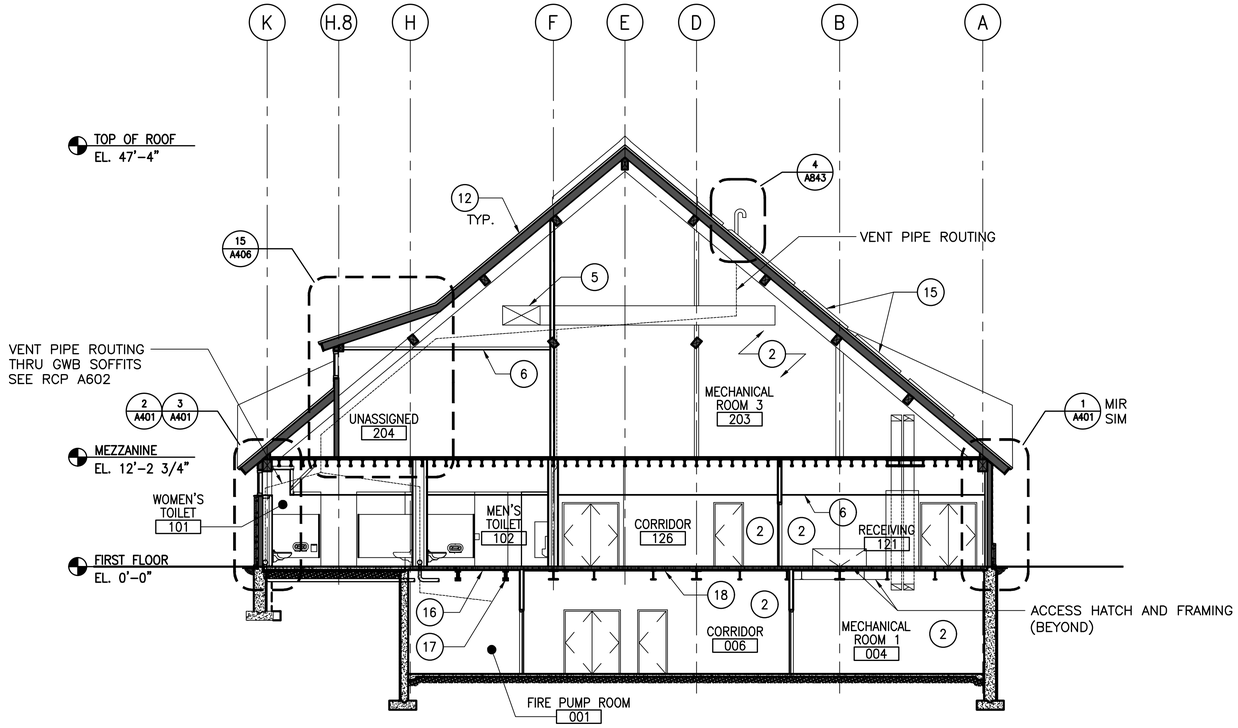

2 BUILDING SECTION
1/8"=1'-0"

SECTION KEY NOTES

1. DOUGLAS FIR STRUCTURE, REFER TO STRUCTURAL
2. PAINTED GWB
4. WOOD SLAT WALL
5. HVAC DUCT, REFER TO HVAC DRAWINGS
6. SUSPENDED CEILING SYSTEM
7. STOREFRONT SYSTEM
9. ALUMINUM CURTAIN WALL SYSTEM
11. TRANSLUCENT SKYLIGHT PANEL SYSTEM
12. METAL ROOF SYSTEM ON SIP'S (STRUCTURAL INSULATED PANELS)
15. PHOTOVOLTAIC ARRAY
16. SPRAY APPLIED 1 HOUR RATED FIRE PROOFING
17. SPRAY APPLIED 1 HOUR RATED FIRE PROOFING AROUND BEAMS
18. SPRAY APPLIED INSULATION
19. SOUND ATTENUATION BATT INSULATION

GENERAL NOTES

PROJECT KEY PLAN

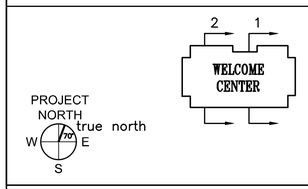

AECOM
1 FEDERAL STREET, 8TH FLOOR
BOSTON, MA 02110
617.723.1700
www.aecom.com

STATE OF MAINE
DEPARTMENT OF TRANSPORTATION

DATE

FED P/N NO: NA

WIN NO: 017163.02 & 017163.03

LICENSED ARCHITECT KARLA MICHELLE WENGLER No. 5292 STATE OF MAINE

SIGNATURE

ARCH. LIN. NUMBER ARC5292

DATE JANUARY 17, 2022

PROJECT INFORMATION

PROGRAM	–
PROJECT MANAGER	–
DESIGNER	AECOM
CONSULTANT	–
PROJECT RESIDENT	–
CONTRACTOR	–
PROJECT COMPLETION DATE	–

MAINE DEPARTMENT OF TRANSPORTATION
ACADIA GATEWAY FACILITY
INTERMODAL AND WELCOME CENTER

BUILDING SECTIONS III

SHEET NUMBER
A312

\\na.aecomnet.com\lfs\AMER\Boston-USBOS01\DCS\Projects\TRN\60653001_MaineDOT_Acadia_Gateway\900_CAD_GIS\910_CAD\Sheet\A312.dwg Jan 17, 2022 - 3:13pm

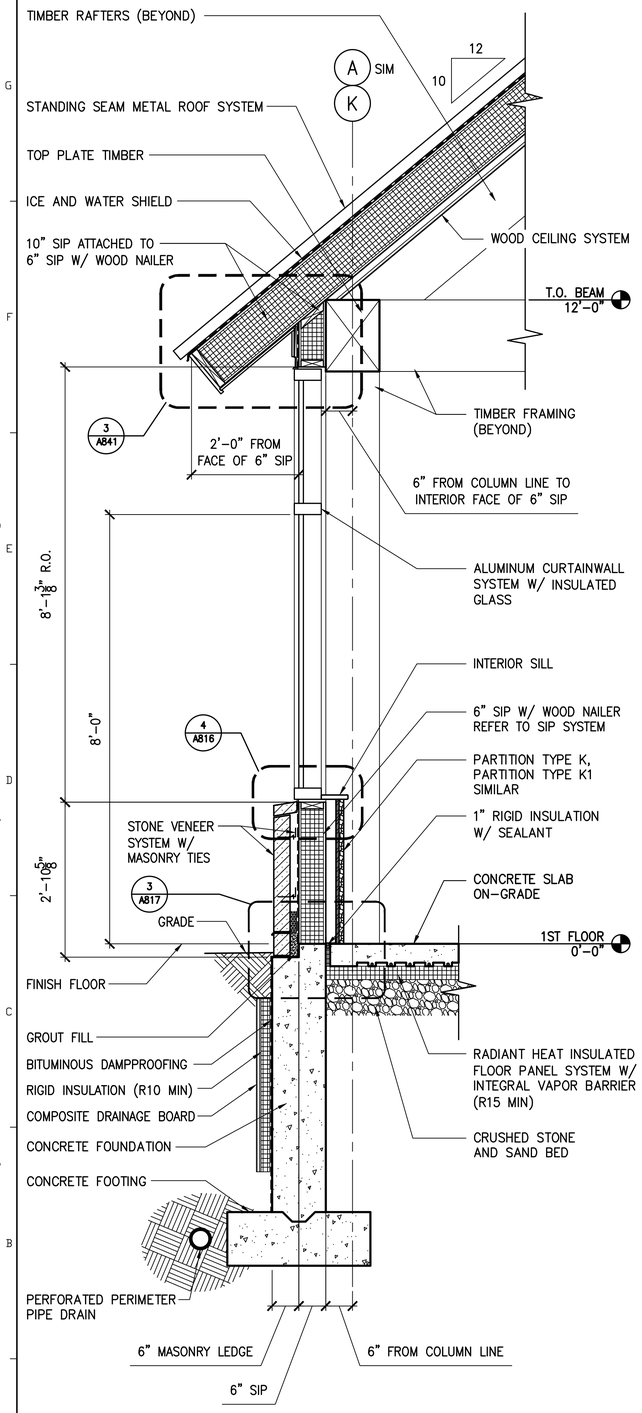

1 WALL SECTION
3/4"=1'-0"

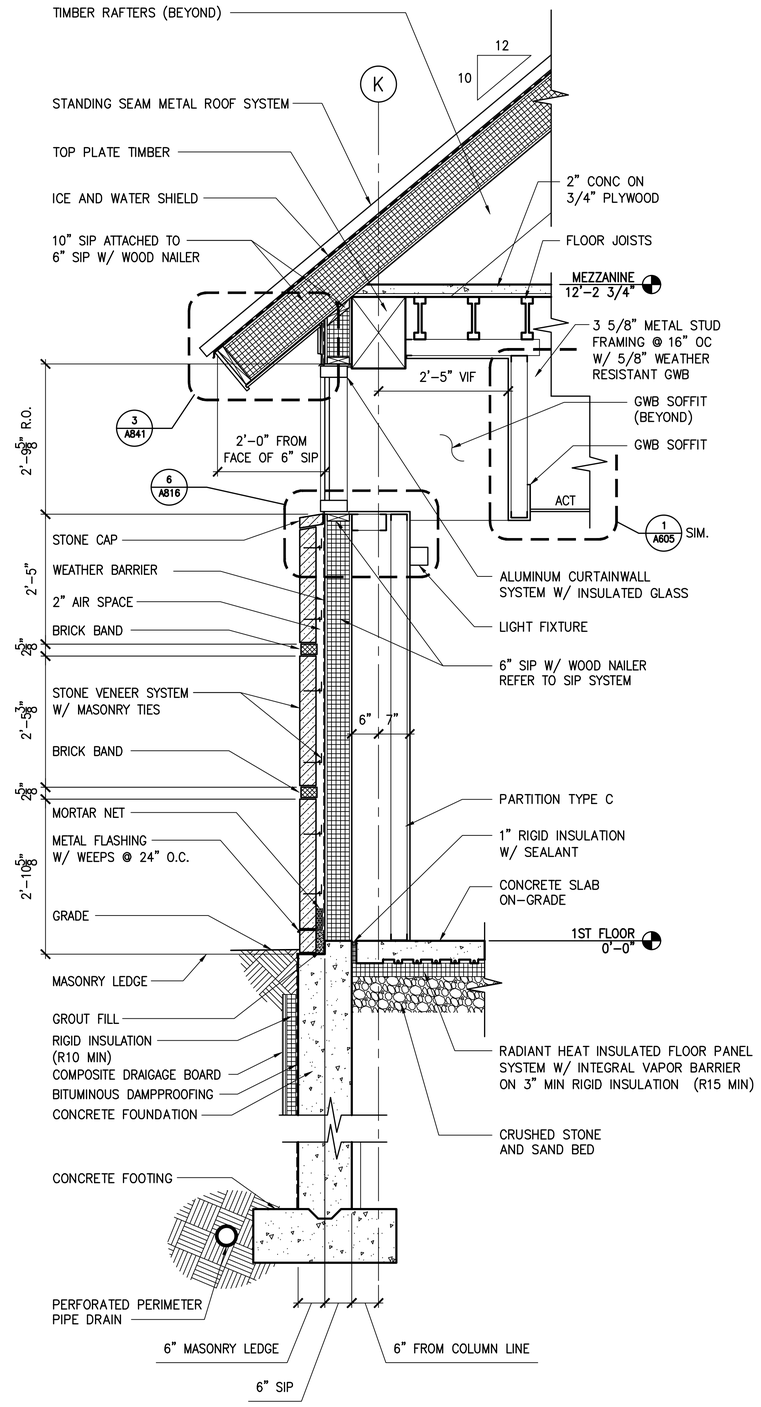

2 WALL SECTION
3/4"=1'-0"

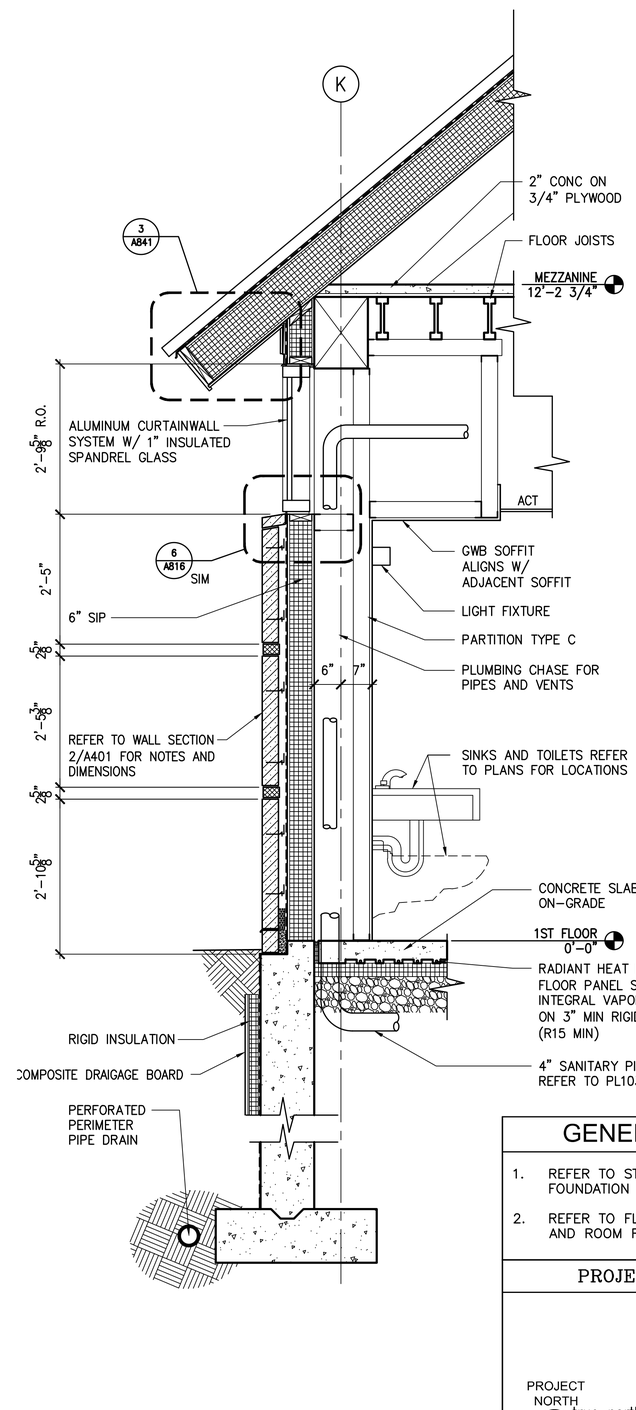

3 WALL SECTION
3/4"=1'-0"

GENERAL NOTES

1. REFER TO STRUCTURAL DRAWINGS FOR FOUNDATION AND PIERS.
2. REFER TO FLOOR FINISH DRAWINGS AND ROOM FINISH SCHEDULE.

PROJECT KEY PLAN

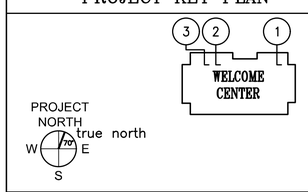

AECOM
1 FEDERAL STREET, 8TH FLOOR
BOSTON, MA 02110
617.723.1700
www.aecom.com

STATE OF MAINE
DEPARTMENT OF TRANSPORTATION

DATE

FED PIN NO: NA
WIN NO: 017163.02 & 017163.03

LICENSED ARCHITECT KATYA MICHELLE WENGLER No. 5292 STATE OF MAINE

SIGNATURE	
ARCH. LIN. NUMBER	ARC5292
DATE	JANUARY 17, 2022

PROJECT INFORMATION	
PROGRAM	-
PROJECT MANAGER	-
DESIGNER	AECOM
CONSULTANT	-
PROJECT RESIDENT	-
CONTRACTOR	-
PROJECT COMPLETION DATE	-

MAINE DEPARTMENT OF TRANSPORTATION
ACADIA GATEWAY FACILITY
INTERMODAL AND WELCOME CENTER

WALL SECTIONS I

SHEET NUMBER
A401

\\na.aecomnet.com\lfs\AMER\Boston-USBOS01\DCS\Projects\TRN\60653001_MaineDOT_Acadia_Gateway\900_CAD_GIS\910_CAD\Sheet\A401.dwg Jan 19, 2022 - 10:50am

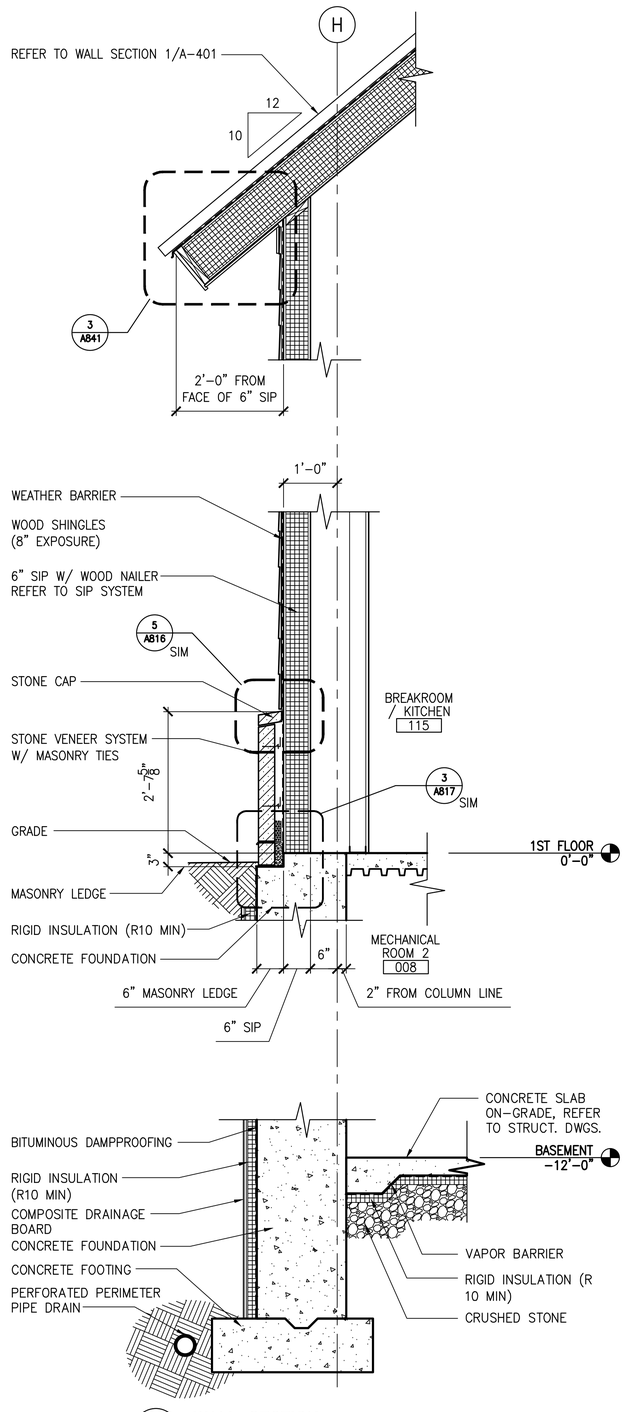

4 WALL SECTION
3/4"=1'-0"

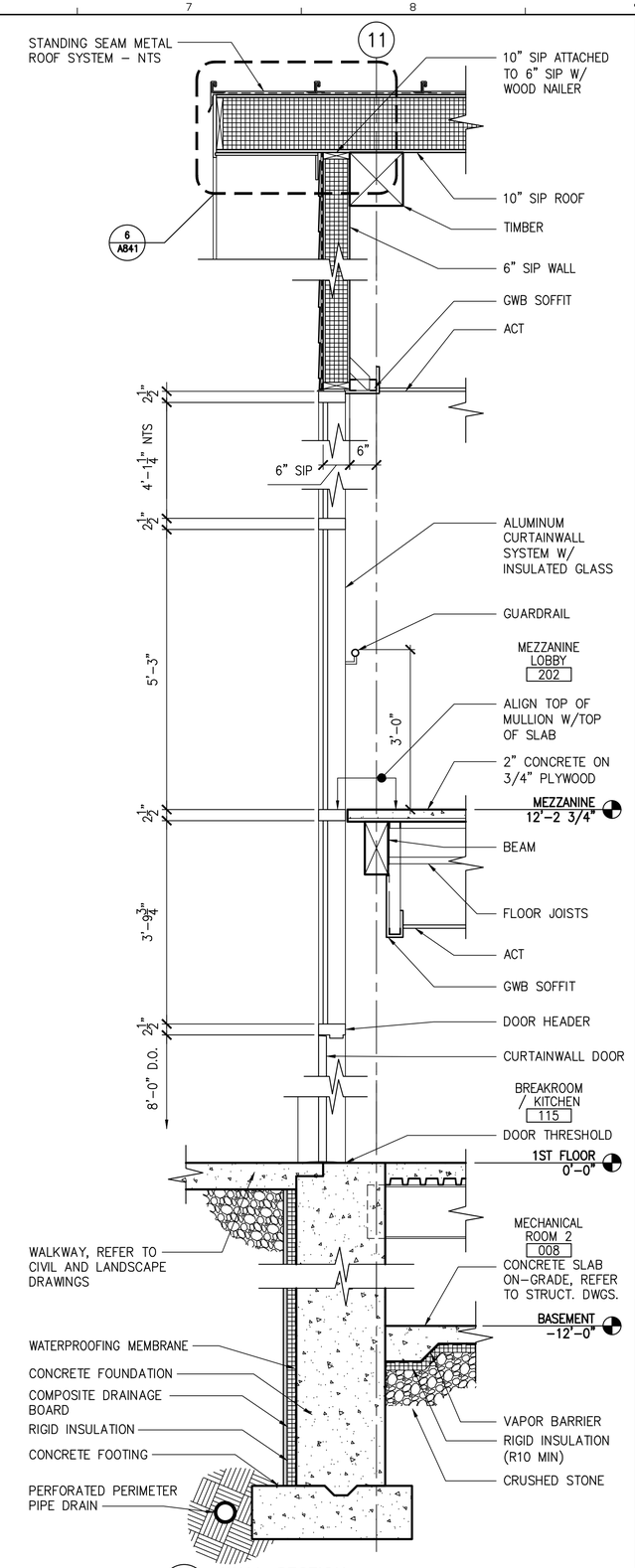

6 WALL SECTION
3/4"=1'-0"

GENERAL NOTES

1. REFER TO STRUCTURAL DRAWINGS FOR FOUNDATION AND PIERS.
2. REFER TO FLOOR FINISH DRAWINGS AND ROOM FINISH SCHEDULE.

PROJECT KEY PLAN

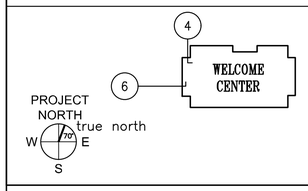

AECOM
1 FEDERAL STREET, 8TH FLOOR
BOSTON, MA 02110
617.723.1700
www.aecom.com

STATE OF MAINE
DEPARTMENT OF TRANSPORTATION

	DATE

FED PIN NO: NA
WIN NO: 017163.02 & 017163.03

LICENSED ARCHITECT KATLA MICHELLE WENGLER No. 5292 STATE OF MAINE

SIGNATURE
ARCH. LIN. NUMBER ARC5292
DATE JANUARY 17, 2022

PROJECT INFORMATION	
PROGRAM	–
PROJECT MANAGER	–
DESIGNER	AECOM
CONSULTANT	–
PROJECT RESIDENT	–
CONTRACTOR	–
PROJECT COMPLETION DATE	–

MAINE DEPARTMENT OF TRANSPORTATION
ACADIA GATEWAY FACILITY
INTERMODAL AND WELCOME CENTER

WALL SECTIONS II

SHEET NUMBER
A402

\\na.aecomnet.com\lfs\AMER\Boston-USBOS01\DCS\Projects\TRN\60653001_MaineDOT_Acadia_Gateway\900_CAD_GIS\910_CAD\Sheet\A402.dwg Jan 19, 2022 - 2:07pm

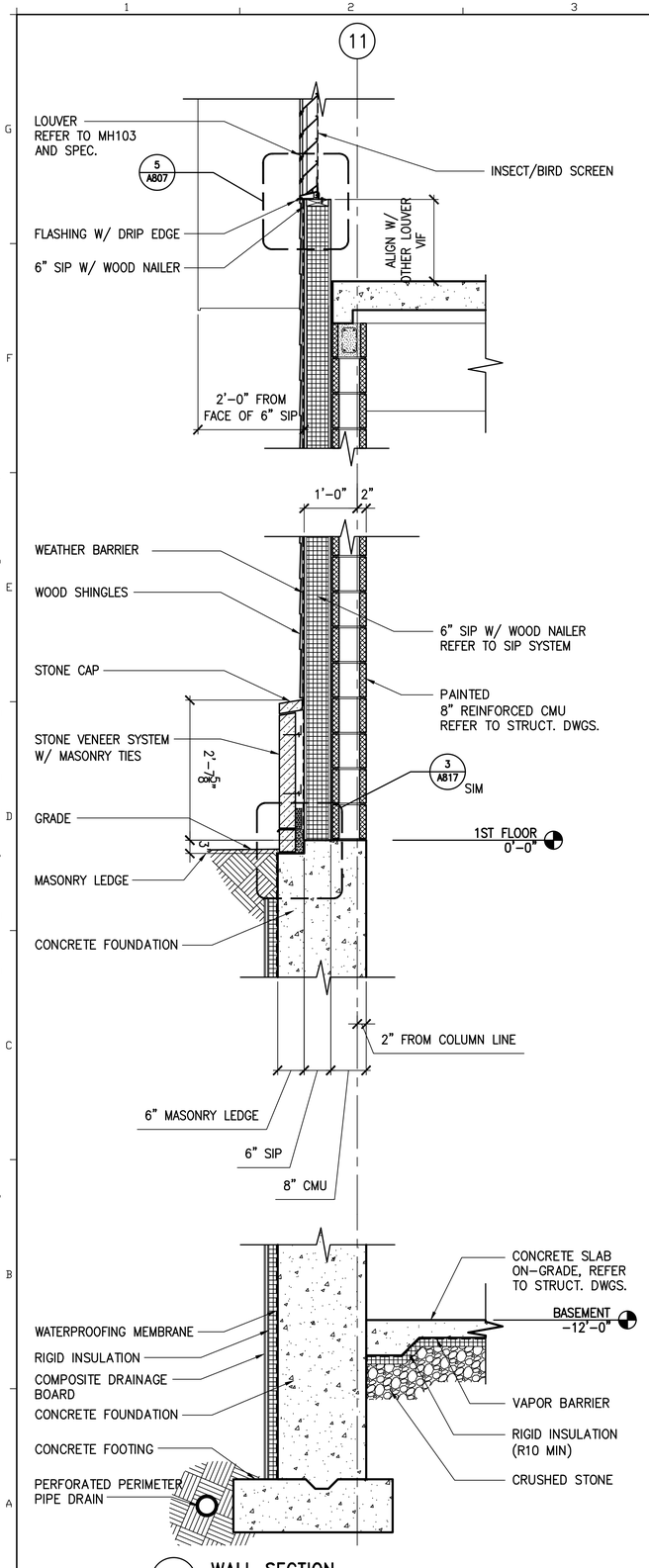

7 WALL SECTION
3/4"=1'-0"

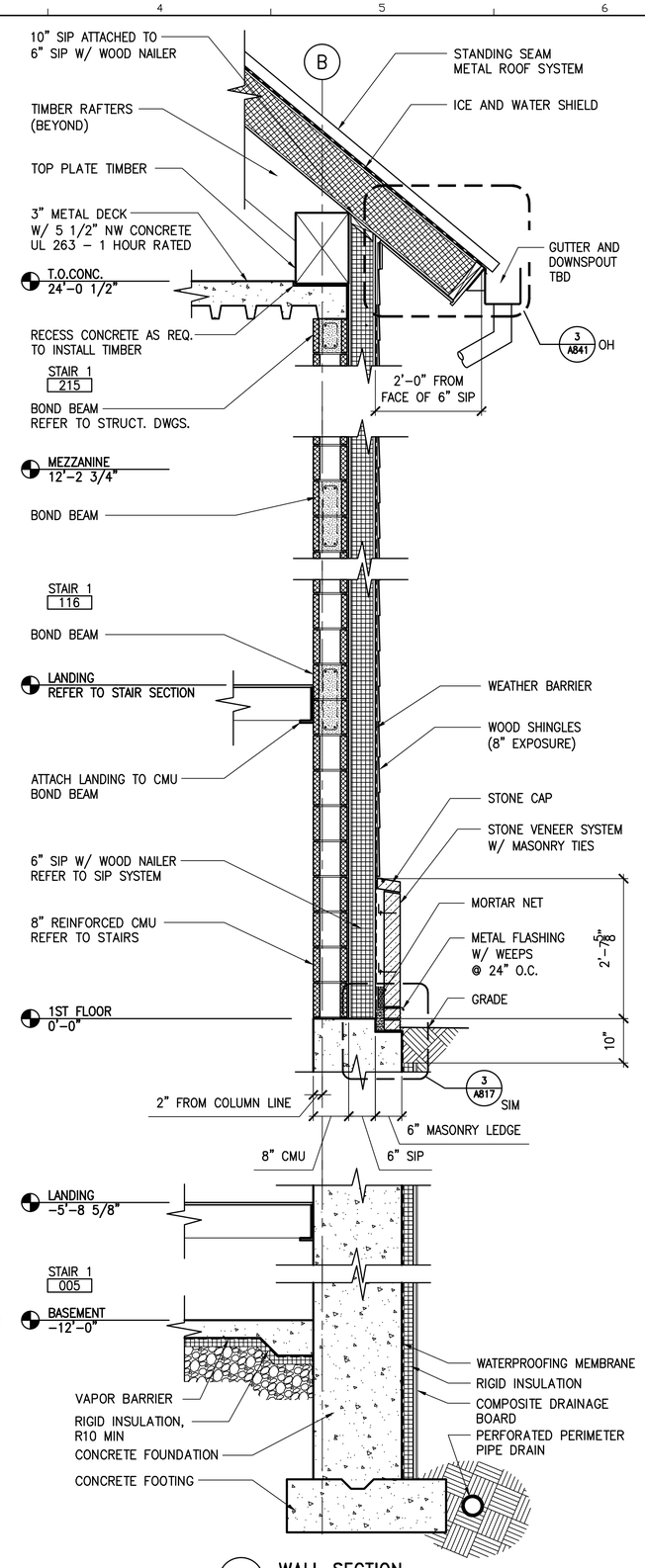

8 WALL SECTION
3/4"=1'-0"

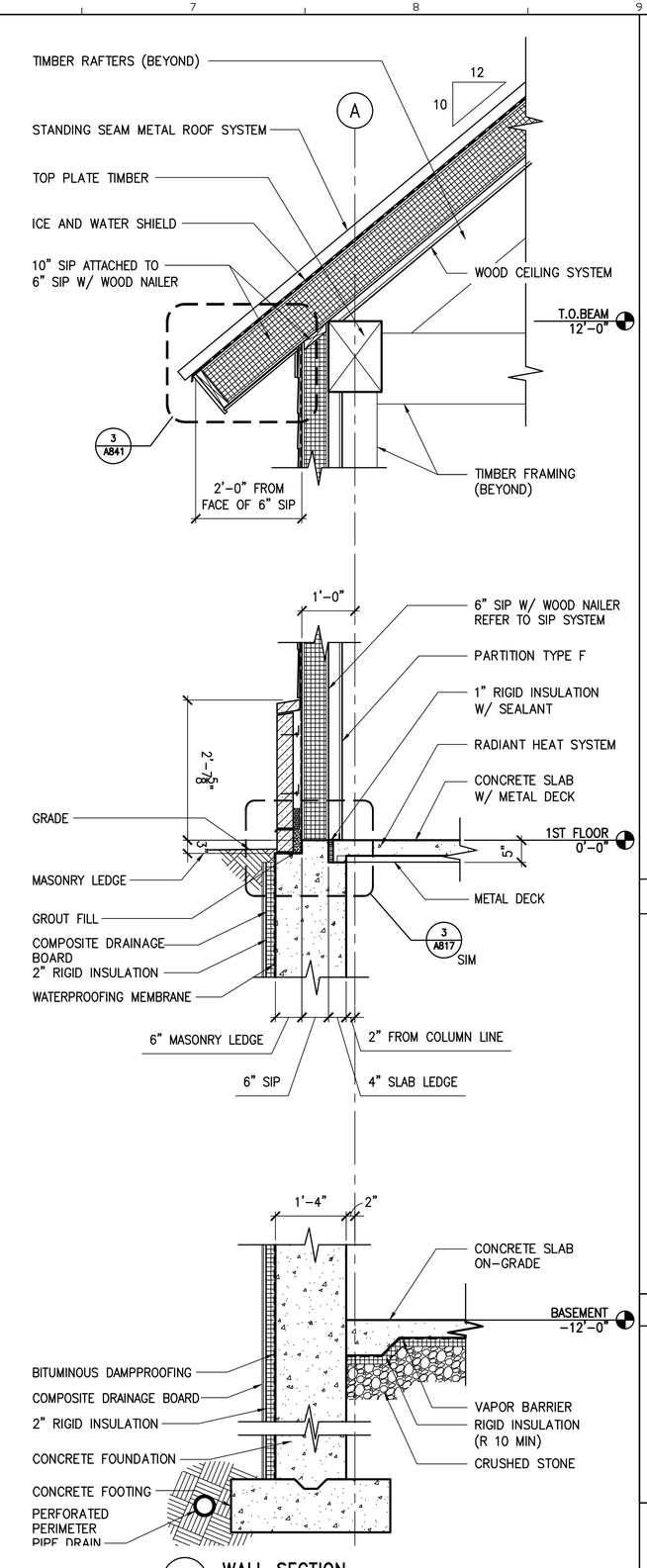

9 WALL SECTION
3/4"=1'-0"

GENERAL NOTES

1. REFER TO STRUCTURAL DRAWINGS FOR FOUNDATION AND PIERS.
2. REFER TO FLOOR FINISH DRAWINGS AND ROOM FINISH SCHEDULE.

PROJECT KEY PLAN

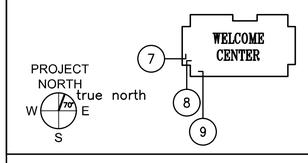

AECOM
1 FEDERAL STREET, 8TH FLOOR
BOSTON, MA 02110
617.723.1700
www.aecom.com

STATE OF MAINE
DEPARTMENT OF TRANSPORTATION

	DATE

FED PIN NO: NA
WIN NO: 017163.02 & 017163.03

LICENSED ARCHITECT
KAYLA MICHELLE WENGLER
No. 5292
STATE OF MAINE

SIGNATURE
ARCH. LIN. NUMBER ARC5292
DATE JANUARY 17, 2022

PROJECT INFORMATION	
PROGRAM	–
PROJECT MANAGER	–
DESIGNER	AECOM
CONSULTANT	–
PROJECT RESIDENT	–
CONTRACTOR	–
PROJECT COMPLETION DATE	–

MAINE DEPARTMENT OF TRANSPORTATION
ACADIA GATEWAY FACILITY
INTERMODAL AND WELCOME CENTER

WALL SECTIONS III

SHEET NUMBER
A403

\\na.aecomnet.com\lfs\AMER\Boston-USBOS01\DCS\Projects\TRN\60653001_MaineDOT_Acadia_Gateway\900_CAD_GIS\910_CAD\Sheet\A403.dwg Jan 19, 2022 - 10:53am

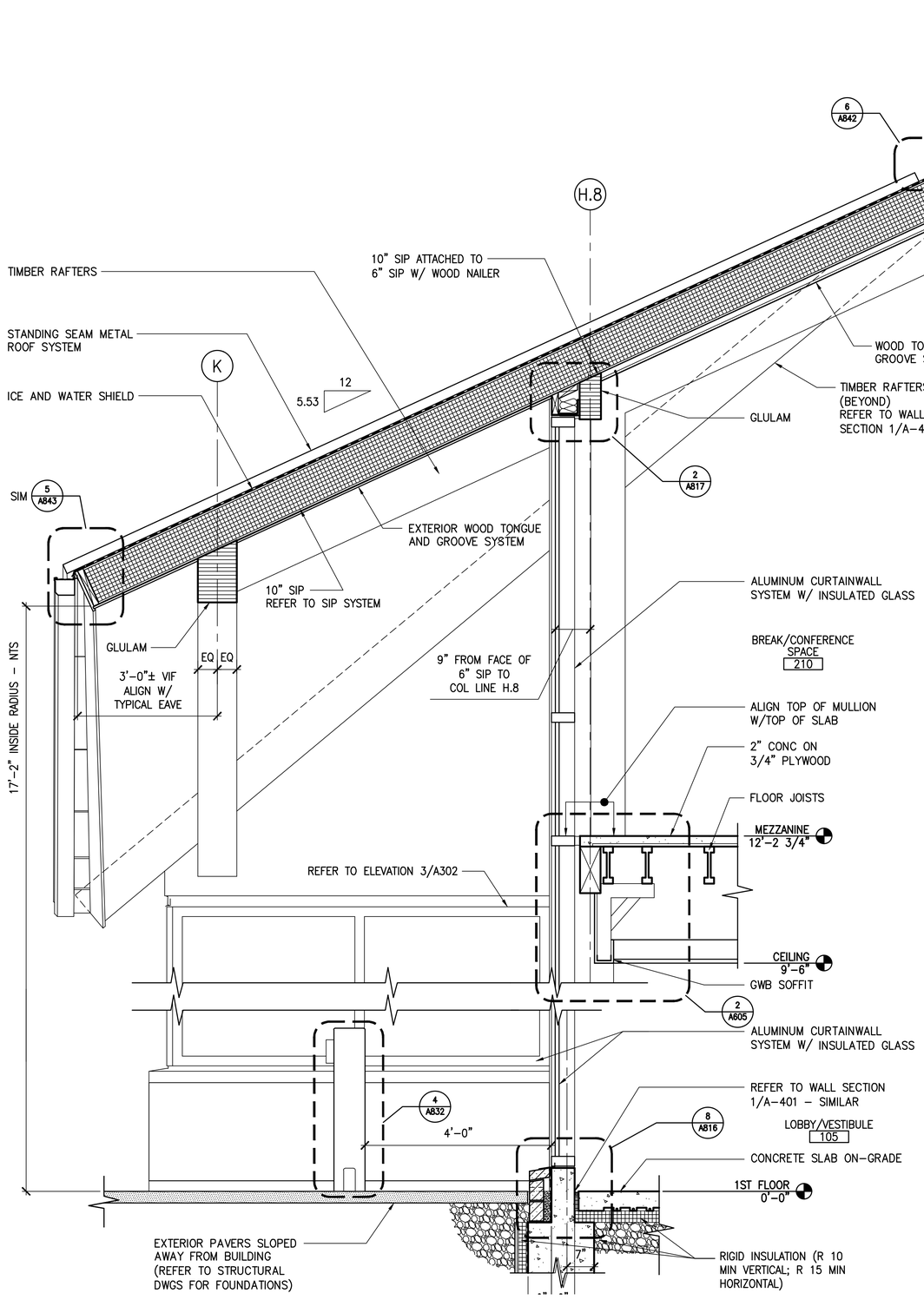

10 WALL SECTION
3/4"=1'-0"

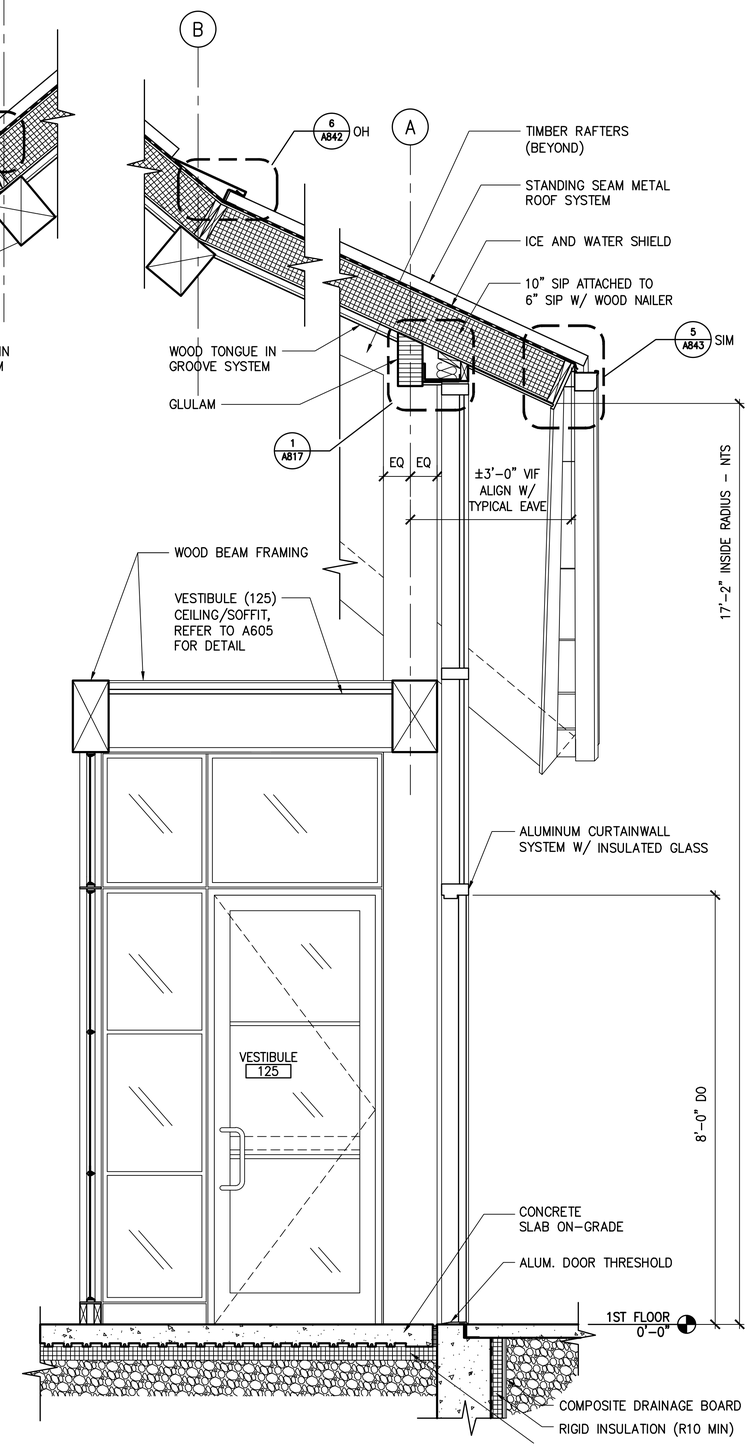

11 WALL SECTION
3/4"=1'-0"

GENERAL NOTES

1. REFER TO STRUCTURAL DRAWINGS FOR FOUNDATION AND PIERS.
2. REFER TO FLOOR FINISH DRAWINGS AND ROOM FINISH SCHEDULE.

PROJECT KEY PLAN

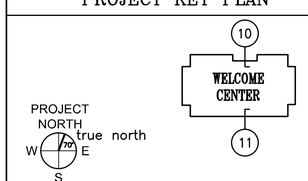

AECOM
1 FEDERAL STREET, 8TH FLOOR
BOSTON, MA 02110
617.723.1700
www.aecom.com

STATE OF MAINE
DEPARTMENT OF TRANSPORTATION

DATE

FED P/N NO: NA
WIN NO: 017163.02 & 017163.03

LICENSED ARCHITECT KARYLA MICHELLE WENGLER No. 5292 STATE OF MAINE

SIGNATURE
ARCH. LIN. NUMBER ARC5292
DATE JANUARY 17, 2022

PROJECT INFORMATION	
PROGRAM	-
PROJECT MANAGER	-
DESIGNER	AECOM
CONSULTANT	-
PROJECT RESIDENT	-
CONTRACTOR	-
PROJECT COMPLETION DATE	-

MAINE DEPARTMENT OF TRANSPORTATION
ACADIA GATEWAY FACILITY
INTERMODAL AND WELCOME CENTER
WALL SECTIONS IV

SHEET NUMBER
A404

\\na.aecomnet.com\lfs\AMER\Boston-USBOS01\DCS\Projects\TRN\60653001_MaineDOT_Acadia_Gateway\900_CAD_GIS\910_CAD\Sheet\A404.dwg Jan 19, 2022 - 10:54am

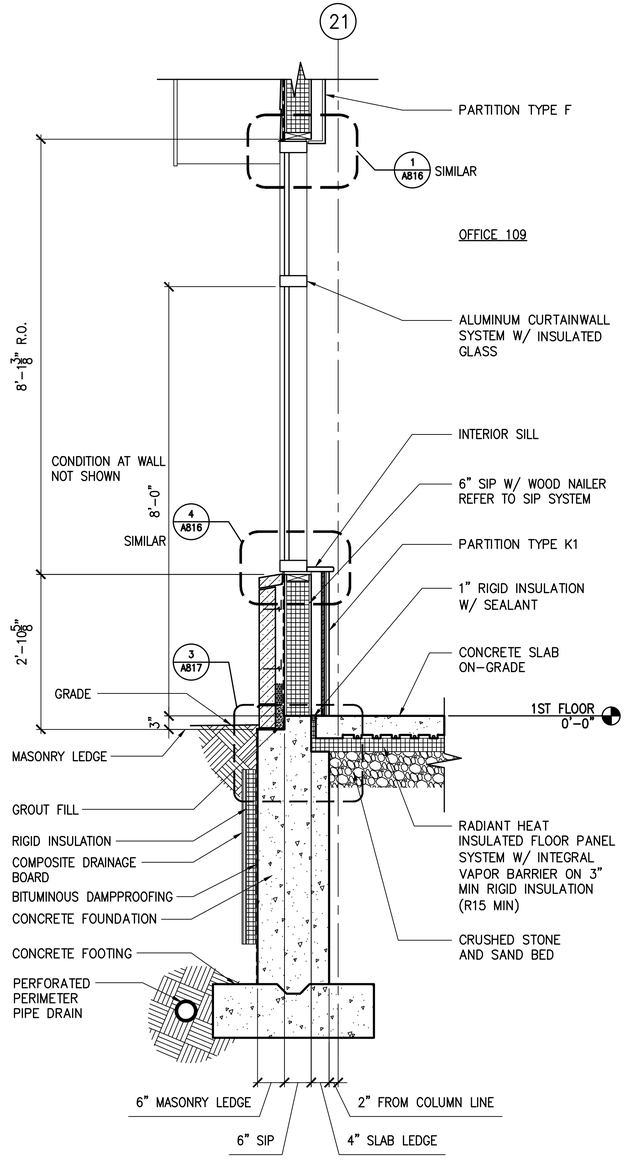

12 PARTIAL WALL SECTION
3/4"=1'-0"

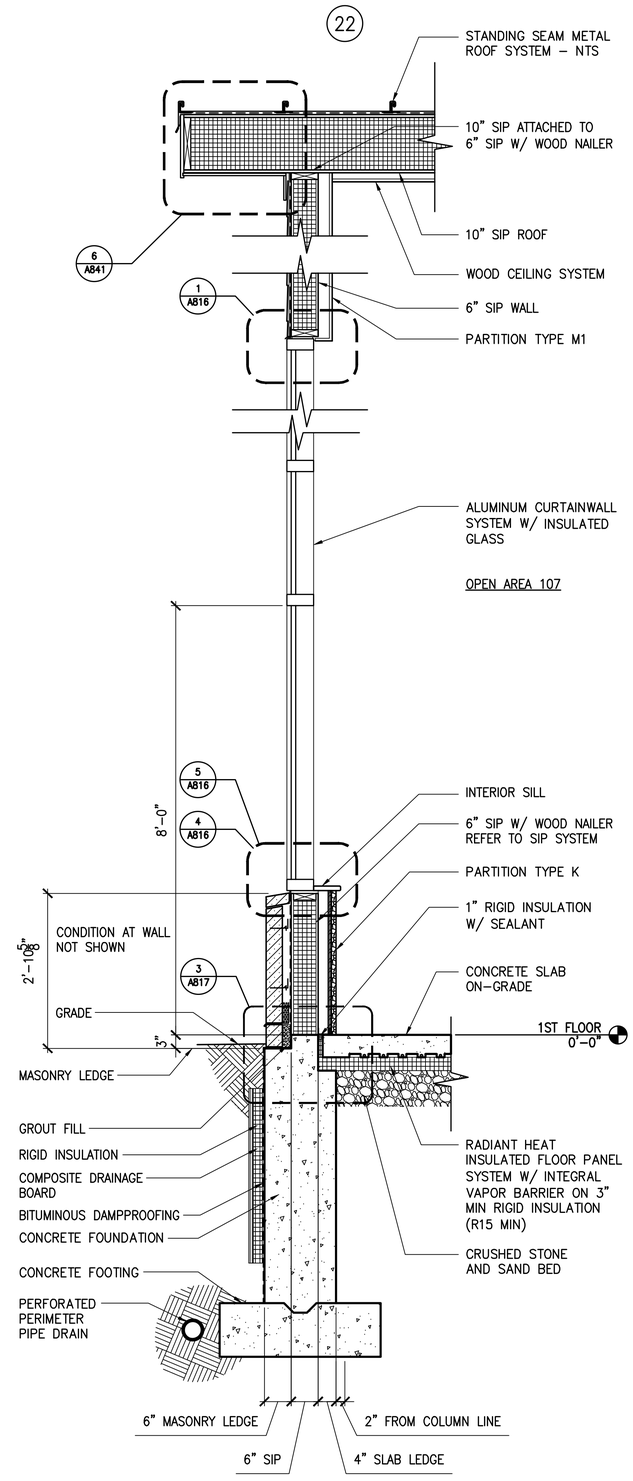

13 WALL SECTION
3/4"=1'-0"

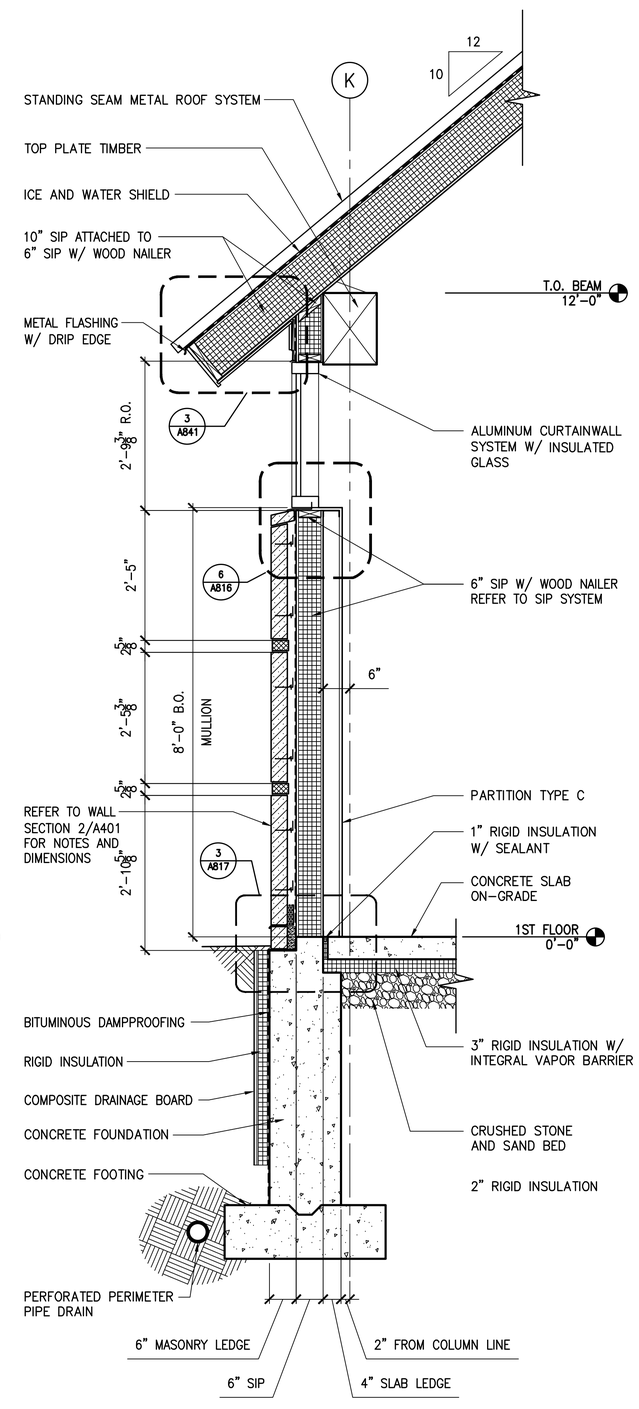

14 WALL SECTION
3/4"=1'-0"

GENERAL NOTES

1. REFER TO STRUCTURAL DRAWINGS FOR FOUNDATION AND PIERS.
2. REFER TO FLOOR FINISH DRAWINGS AND ROOM FINISH SCHEDULE.

PROJECT KEY PLAN

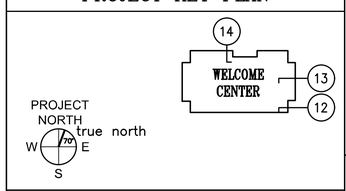

AECOM
1 FEDERAL STREET, 8TH FLOOR
BOSTON, MA 02110
617.723.1700
www.aecom.com

STATE OF MAINE
DEPARTMENT OF TRANSPORTATION

DATE

FED PIN NO: NA

WIN NO: 017163.02 & 017163.03

LICENSED ARCHITECT KARYLA MICHELLE WENGLER No. 5292 STATE OF MAINE

SIGNATURE

ARCH. LIN. NUMBER ARC5292

DATE JANUARY 17, 2022

PROJECT INFORMATION	
PROGRAM	–
PROJECT MANAGER	–
DESIGNER	AECOM
CONSULTANT	–
PROJECT RESIDENT	–
CONTRACTOR	–
PROJECT COMPLETION DATE	–

MAINE DEPARTMENT OF TRANSPORTATION
ACADIA GATEWAY FACILITY
INTERMODAL AND WELCOME CENTER

WALL SECTIONS V

SHEET NUMBER
A405

\\na.aecomnet.com\lfs\AMER\Boston-USBOS01\DCS\Projects\TRN\60653001_MaineDOT_Acadia_Gateway\900_CAD_GIS\910_CAD\Sheet\A405.dwg Jan 19, 2022 - 10:54am

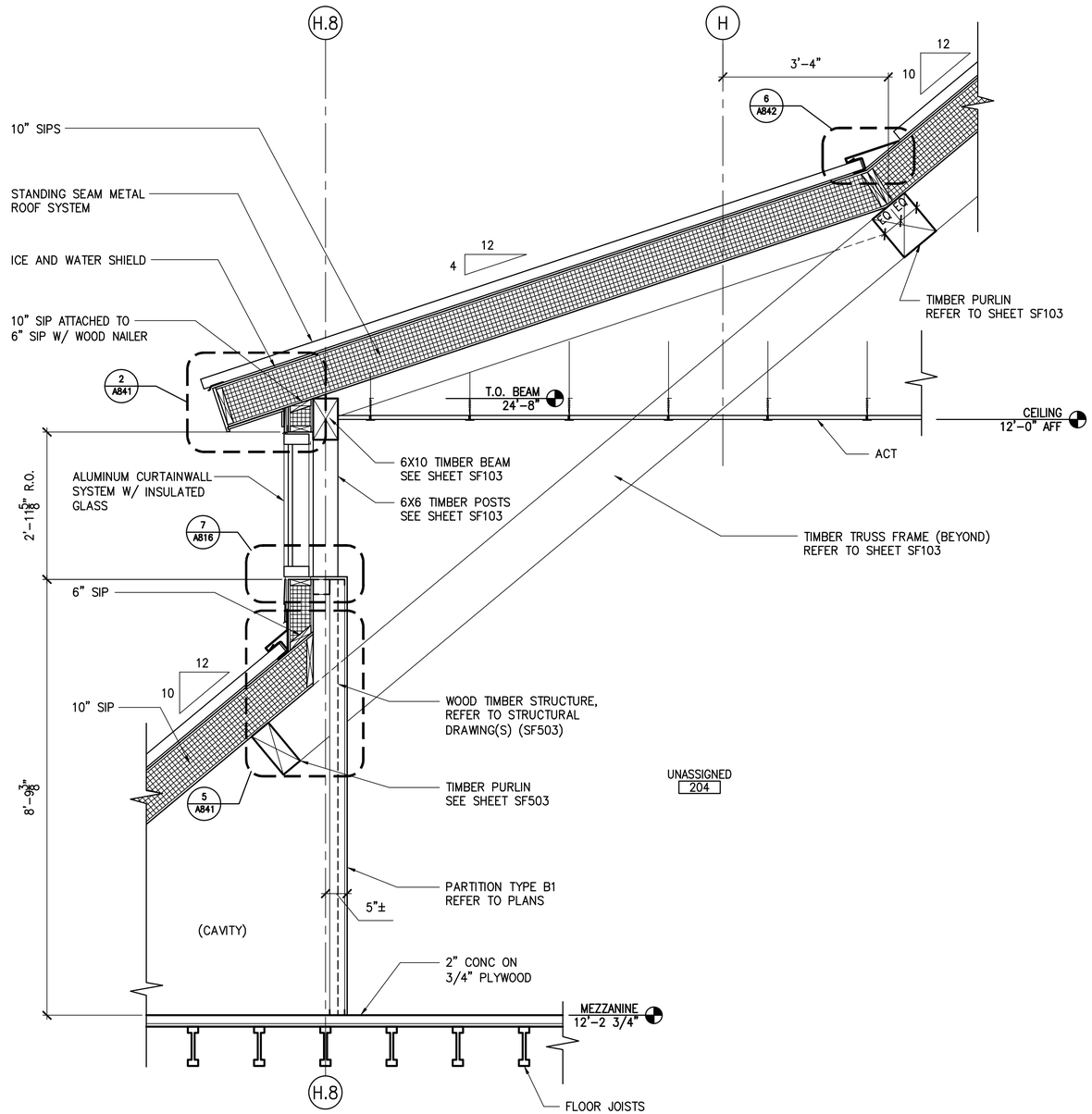

15 PARTIAL WALL SECTION
3/4"=1'-0"

GENERAL NOTES

1. REFER TO STRUCTURAL DRAWINGS FOR FOUNDATION AND PIERS.
2. REFER TO FLOOR FINISH DRAWINGS AND ROOM FINISH SCHEDULE.

PROJECT KEY PLAN

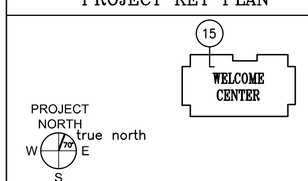

AECOM
1 FEDERAL STREET, 8TH FLOOR
BOSTON, MA 02110
617.723.1700
www.aecom.com

STATE OF MAINE
DEPARTMENT OF TRANSPORTATION

DATE

FED P/N NO: NA
WIN NO: 017163.02 & 017163.03

LICENSED ARCHITECT KATLA MICHELLE WENGLER No. 5292 STATE OF MAINE

SIGNATURE
ARCH. LIN. NUMBER ARC5292
DATE JANUARY 17, 2022

PROJECT INFORMATION	
PROGRAM	–
PROJECT MANAGER	–
DESIGNER	AECOM
CONSULTANT	–
PROJECT RESIDENT	–
CONTRACTOR	–
PROJECT COMPLETION DATE	–

MAINE DEPARTMENT OF TRANSPORTATION
ACADIA GATEWAY FACILITY
INTERMODAL AND WELCOME CENTER

WALL SECTIONS VI

SHEET NUMBER
A406

\\na.aecomnet.com\lfs\AMER\Boston-USBOS01\DCS\Projects\TRN\60653001_MaineDOT_Acadia_Gateway\900_CAD_GIS\910_CAD\Sheet\A406.dwg Jan 19, 2022 - 10:51am

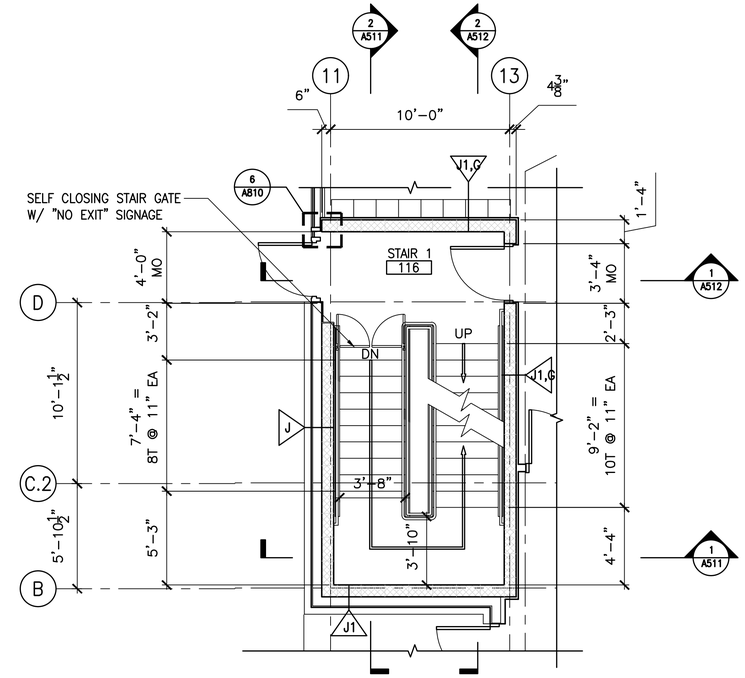

2 STAIR 1 – FIRST FLOOR PLAN
1/4"=1'-0"

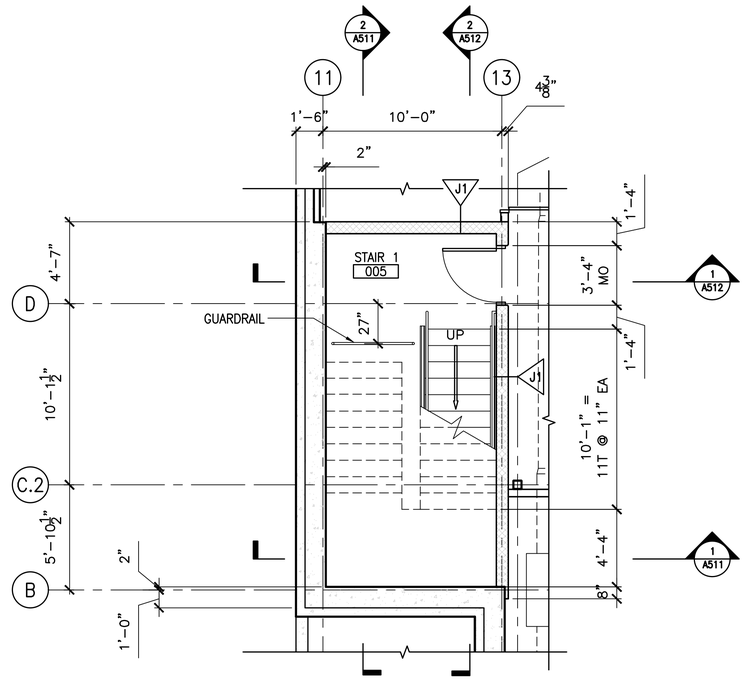

1 STAIR 1 – BASEMENT PLAN
1/4"=1'-0"

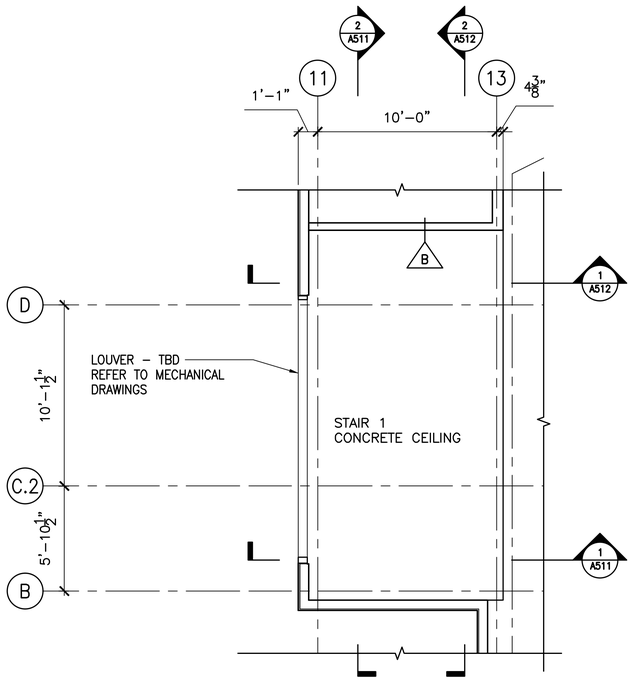

4 STAIR 1 – ATTIC FLOOR PLAN
1/4"=1'-0"

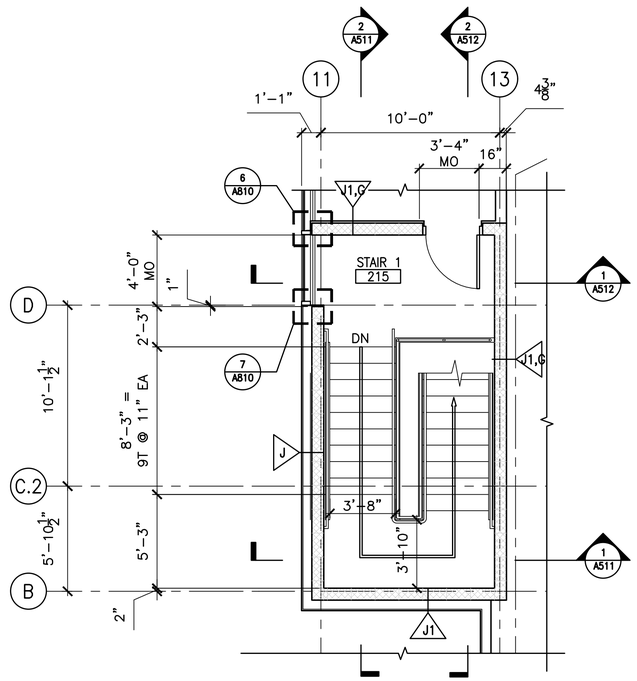

3 STAIR 1 – MEZZANINE PLAN
1/4"=1'-0"

GENERAL NOTES

1. REFER TO A830 & A831 FOR ALL PARTITION TYPES.

AECOM
1 FEDERAL STREET, 8TH FLOOR
BOSTON, MA 02110
617.723.1700
www.aecom.com

STATE OF MAINE
DEPARTMENT OF TRANSPORTATION

DATE

FED P/N NO: NA
WIN NO: 017163.02 & 017163.03

LICENSED ARCHITECT KARLA MICHELLE WENGLER No. 5292 STATE OF MAINE

SIGNATURE	
ARCH. LIN. NUMBER	ARC5292
DATE	JANUARY 17, 2022

PROJECT INFORMATION	
PROGRAM	–
PROJECT MANAGER	–
DESIGNER	AECOM
CONSULTANT	–
PROJECT RESIDENT	–
CONTRACTOR	–
PROJECT COMPLETION DATE	–

MAINE DEPARTMENT OF TRANSPORTATION
ACADIA GATEWAY FACILITY
INTERMODAL AND WELCOME CENTER

STAIR 1 – FLOOR PLANS

SHEET NUMBER
A510

\\na.aecomnet.com\lfs\AMER\Boston-USBOS01\DCS\Projects\TRN\60653001_MaineDOT_Acadia_Gateway\900_CAD_GIS\910_CAD\Sheet\A510.dwg Jan 17, 2022 - 3:18pm

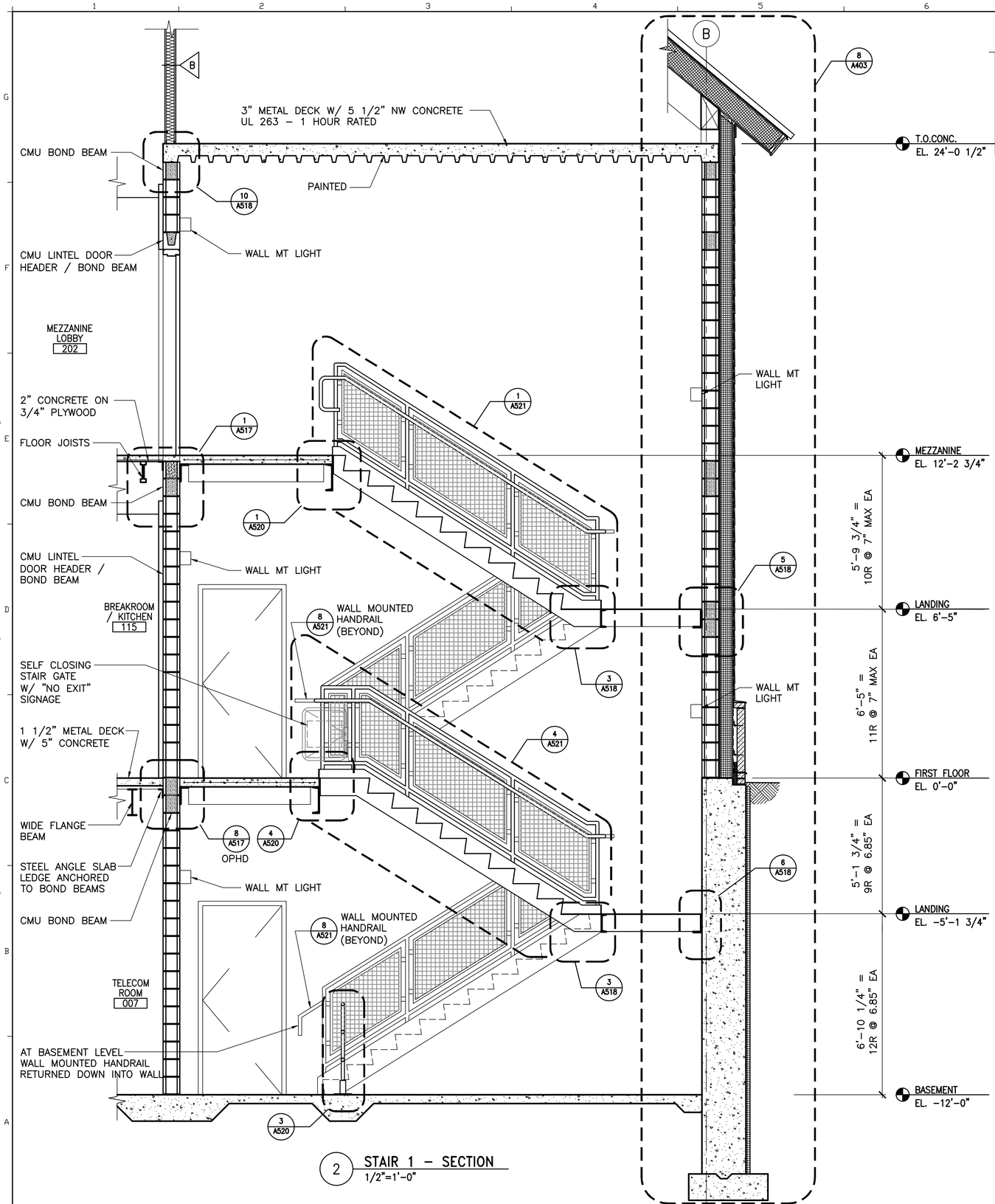

2 STAIR 1 – SECTION
1/2"=1'-0"

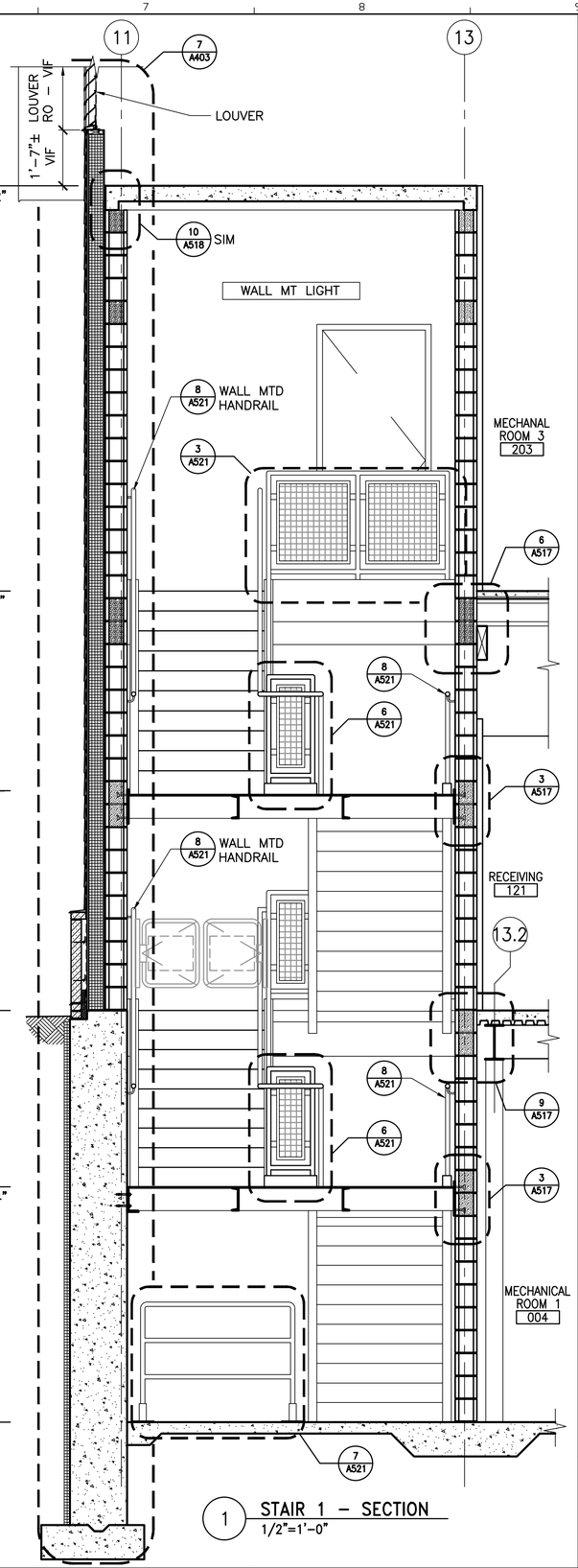

1 STAIR 1 – SECTION
1/2"=1'-0"

SECTION KEY NOTES

GENERAL NOTES

AECOM
1 FEDERAL STREET, 8TH FLOOR
BOSTON, MA 02110
617.723.1700
www.aecom.com

STATE OF MAINE
DEPARTMENT OF TRANSPORTATION

	DATE

FED PIN NO: NA
WIN NO: 017163.02 & 017163.03

LICENSED ARCHITECT KATYLA MICHELLE WENGLER No. 5292 STATE OF MAINE

SIGNATURE

ARCH. LIN. NUMBER ARC5292

DATE JANUARY 17, 2022

PROJECT INFORMATION	
PROGRAM	–
PROJECT MANAGER	–
DESIGNER	AECOM
CONSULTANT	–
PROJECT RESIDENT	–
CONTRACTOR	–
PROJECT COMPLETION DATE	–

MAINE DEPARTMENT OF TRANSPORTATION
ACADIA GATEWAY FACILITY
INTERMODAL AND WELCOME CENTER

STAIR 1 –SECTIONS I

SHEET NUMBER
A511

\\na.aecomnet.com\lfs\AMER\Boston-USBOS01\DCS\Projects\TRN\60653001_MaineDOT_Acadia_Gateway\900_CAD_GIS\910_CAD\Sheet\A511.dwg Jan 17, 2022 - 3:19pm

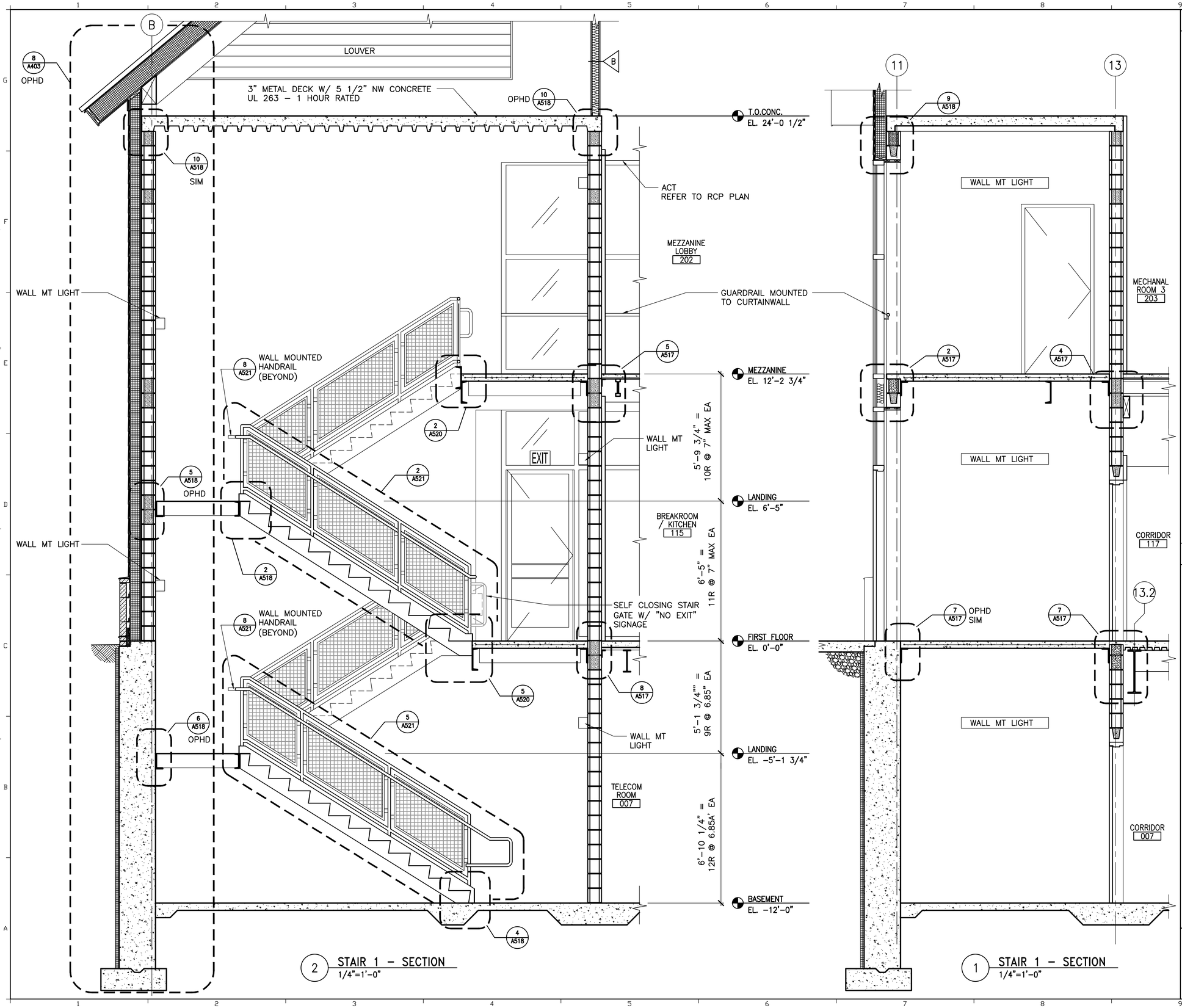

2 STAIR 1 – SECTION
1/4"=1'-0"

1 STAIR 1 – SECTION
1/4"=1'-0"

SECTION KEY NOTES

GENERAL NOTES

1. REFER TO A830 & A831 FOR ALL PARTITION TYPES.

AECOM
1 FEDERAL STREET, 8TH FLOOR
BOSTON, MA 02110
617.723.1700
www.aecom.com

STATE OF MAINE
DEPARTMENT OF TRANSPORTATION

DATE

FED PIN NO: NA
WIN NO: 017163.02 & 017163.03

LICENSED ARCHITECT KAYLA MICHELLE WENGLER No. 5292 STATE OF MAINE

SIGNATURE
ARCH. LIN. NUMBER ARC5292
DATE JANUARY 17, 2022

PROJECT INFORMATION	
PROGRAM	–
PROJECT MANAGER	–
DESIGNER	AECOM
CONSULTANT	–
PROJECT RESIDENT	–
CONTRACTOR	–
PROJECT COMPLETION DATE	–

MAINE DEPARTMENT OF TRANSPORTATION
ACADIA GATEWAY FACILITY
INTERMODAL AND WELCOME CENTER
STAIR 1 –SECTIONS II

SHEET NUMBER
A512

\\na.aecomnet.com\lfs\AMER\Boston-USBOS01\DCS\Projects\TRN\60653001_MaineDOT_Acadia_Gateway\900_CAD_GIS\910_CAD\Sheet\A512.dwg Jan 17, 2022 - 3:19pm

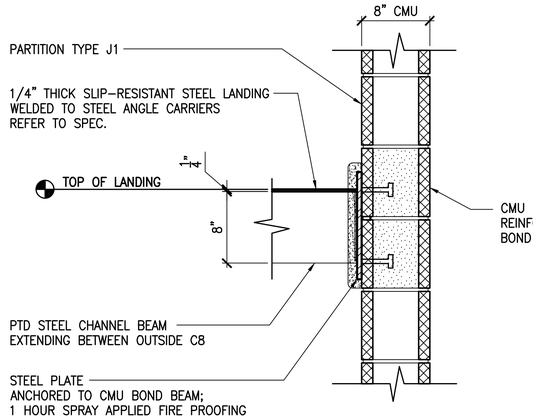

3 STAIR 1 SHAFT DETAIL
1 1/2"=1'-0"

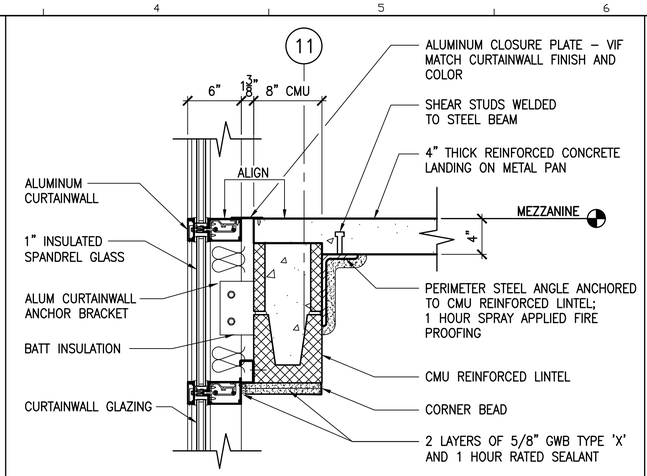

2 STAIR 1 SHAFT DETAIL
1 1/2"=1'-0"

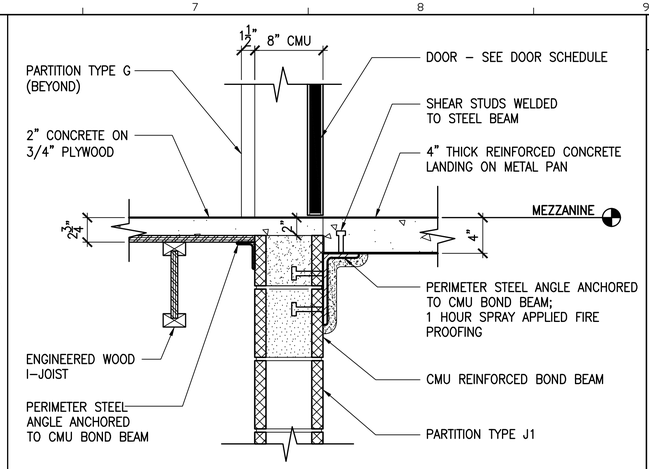

1 STAIR 1 SHAFT DETAIL
1 1/2"=1'-0"

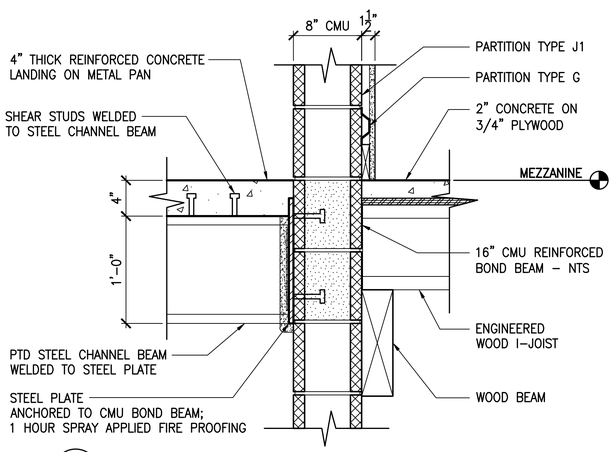

6 STAIR 1 SHAFT DETAIL
1 1/2"=1'-0"

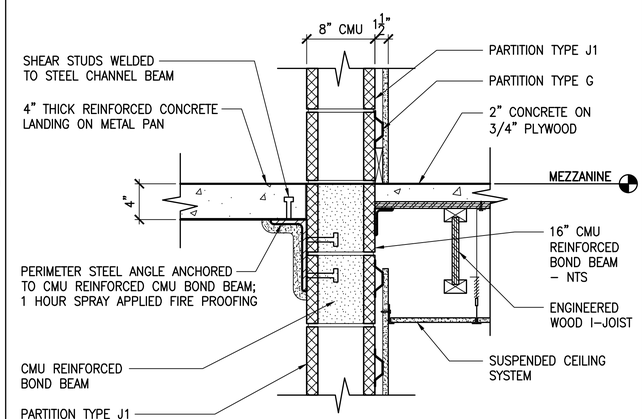

5 STAIR 1 SHAFT DETAIL
1 1/2"=1'-0"

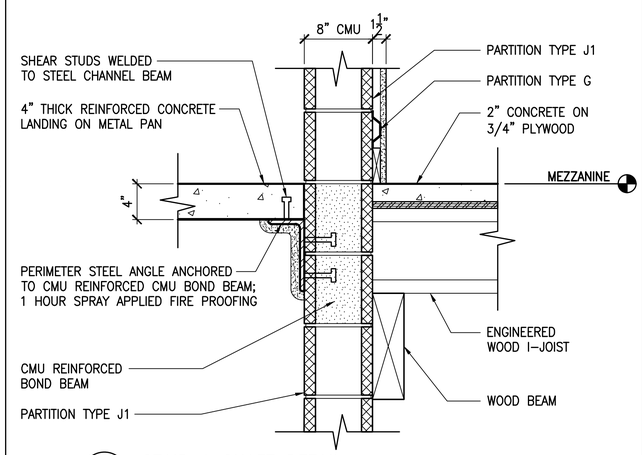

4 STAIR 1 SHAFT DETAIL
1 1/2"=1'-0"

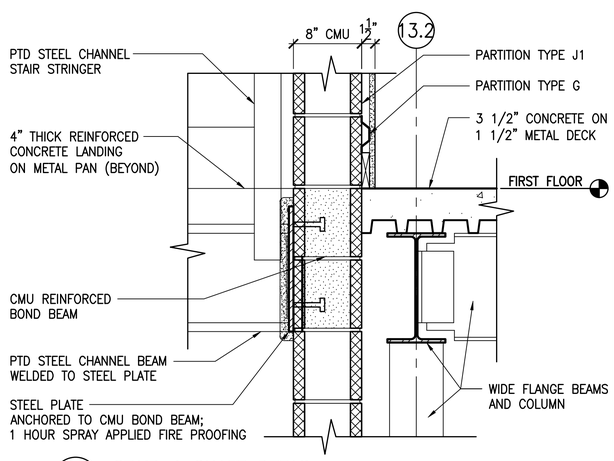

9 STAIR 1 SHAFT DETAIL
1 1/2"=1'-0"

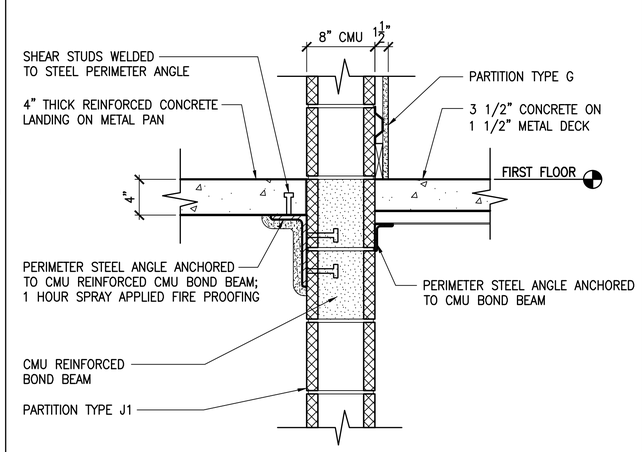

8 STAIR 1 SHAFT DETAIL
1 1/2"=1'-0"

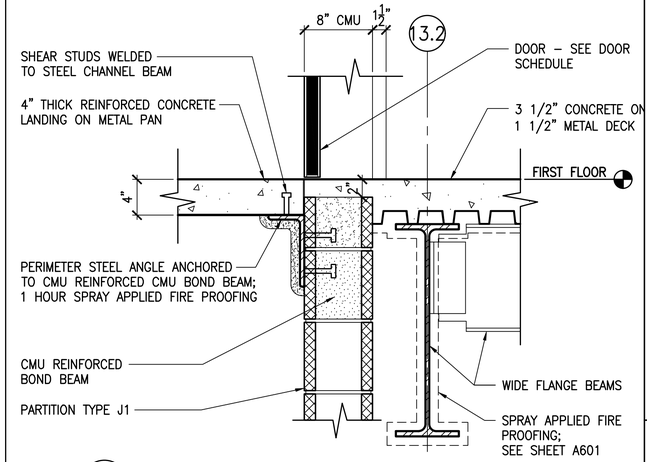

7 STAIR 1 SHAFT DETAIL
1 1/2"=1'-0"

GENERAL NOTES

1. ALL STAIR STRINGERS, CHANNELS, ANGLES, CARRIERS, GUARDRAILS AND MISCELLANEOUS STEEL SHALL BE PAINTED STEEL U.O.N.
2. ALL TREADS TO BE STEEL SLIP-RESISTANT PRE-FINISHED TREADS.
3. ALL HANDRAILS SHALL BE STAINLESS STEEL (SST) W/ PAINTED STEEL BRACKETS. PROVIDE CORROSION RESISTANT GASKET BETWEEN DIFFERENT ALLOYS, AS REQUIRED.
4. REFER TO A830 & A831 FOR ALL PARTITION TYPES.

AECOM
1 FEDERAL STREET, 8TH FLOOR
BOSTON, MA 02110
617.723.1700
www.aecom.com

STATE OF MAINE
DEPARTMENT OF TRANSPORTATION

	DATE

FED PIN NO: NA
WIN NO: 017163.02 & 017163.03

LICENSED ARCHITECT KARLA MICHELLE WENGLER No. 5292 STATE OF MAINE

SIGNATURE
ARCH. LIN. NUMBER ARC5292
DATE JANUARY 17, 2022

PROJECT INFORMATION	
PROGRAM	–
PROJECT MANAGER	–
DESIGNER	AECOM
CONSULTANT	–
PROJECT RESIDENT	–
CONTRACTOR	–
PROJECT COMPLETION DATE	–

MAINE DEPARTMENT OF TRANSPORTATION
ACADIA GATEWAY FACILITY
INTERMODAL AND WELCOME CENTER

STAIR 1 – SHAFT DETAILS

SHEET NUMBER
A517

\\na.aecomnet.com\lfs\AMER\Boston-USBOS01\DCS\Projects\TRN\60653001_MaineDOT_Acadia_Gateway\900_CAD_GIS\910_CAD\Sheet\A517.dwg Jan 17, 2022 - 3:20pm

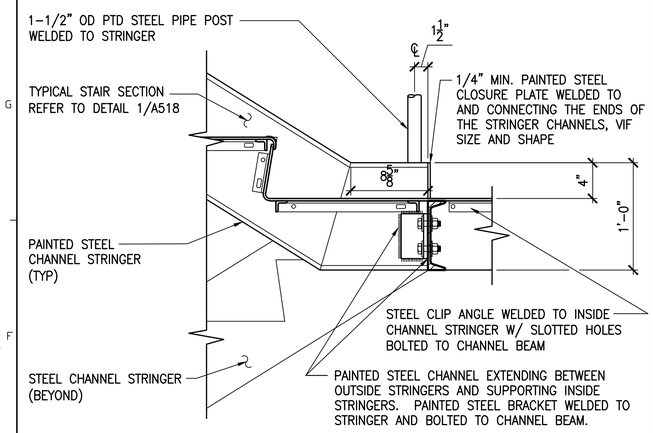

3 SECTION AT INTERMEDIATE LANDING
1 1/2"=1'-0"

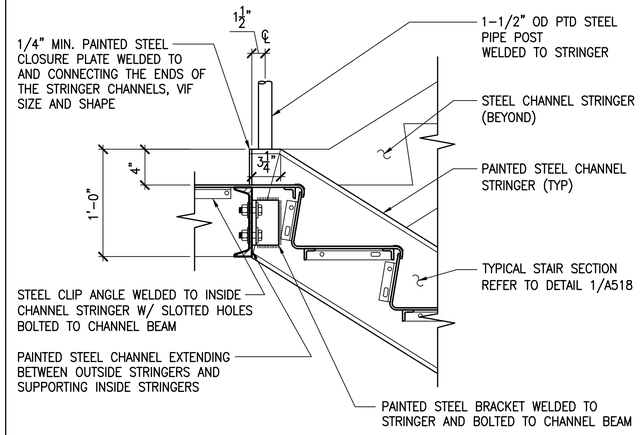

2 SECTION AT INTERMEDIATE LANDING
1 1/2"=1'-0"

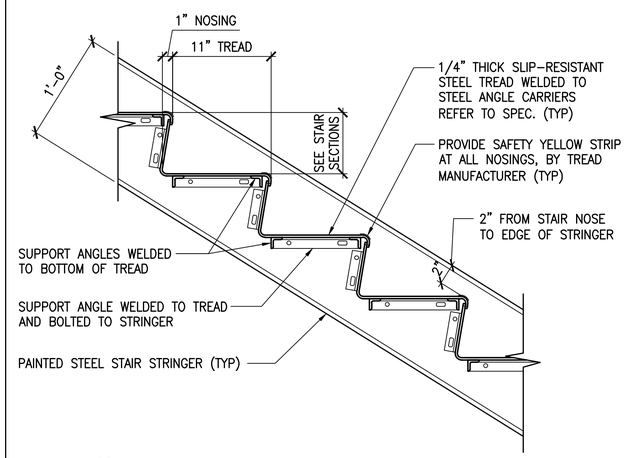

1 TYPICAL STAIR SECTION
1 1/2"=1'-0"

GENERAL NOTES

1. ALL STAIR STRINGERS, CHANNELS, ANGLES, CARRIERS, GUARDRAILS AND MISCELLANEOUS STEEL SHALL BE PAINTED STEEL U.O.N.
2. ALL TREADS TO BE STEEL SLIP-RESISTANT PRE-FINISHED TREADS.
3. ALL HANDRAILS SHALL BE STAINLESS STEEL (SST) W/ PAINTED STEEL BRACKETS. PROVIDE CORROSION RESISTANT GASKET BETWEEN DIFFERENT ALLOYS, AS REQUIRED.
4. REFER TO A830 & A831 FOR ALL PARTITION TYPES.

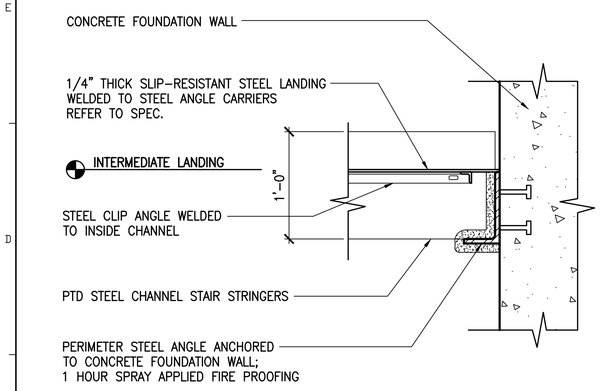

6 SECTION AT INTERMEDIATE LANDING
1 1/2"=1'-0"

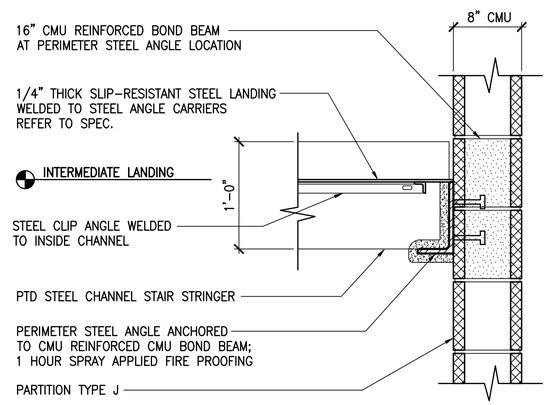

5 SECTION AT INTERMEDIATE LANDING
1 1/2"=1'-0"

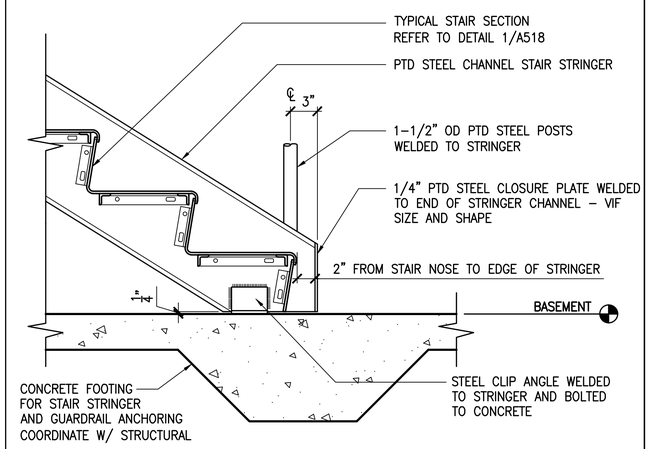

4 SECTION AT STRINGER ATTACHMENT TO LEVEL
1 1/2"=1'-0"

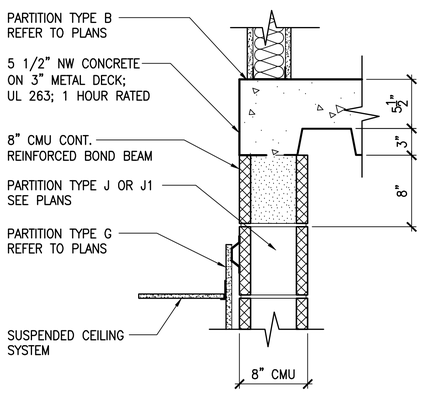

10 STAIR 1 SHAFT DETAIL
1 1/2"=1'-0"

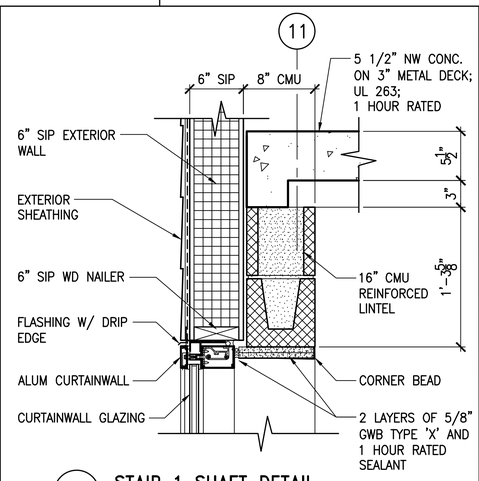

9 STAIR 1 SHAFT DETAIL
1 1/2"=1'-0"

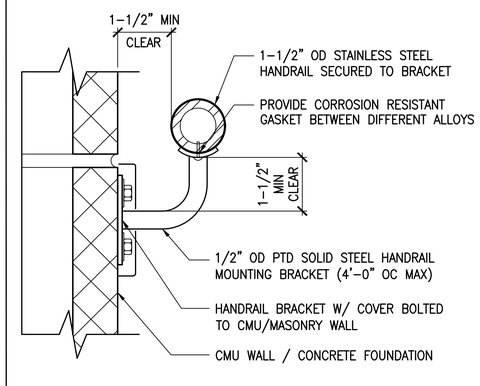

8 TYPICAL HANDRAIL DETAIL AT CMU WALL
6"=1'-0"

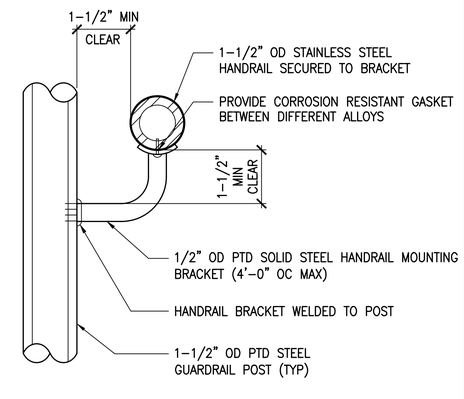

7 TYPICAL HANDRAIL DETAIL AT GUARDRAIL
6"=1'-0"

AECOM
1 FEDERAL STREET, 8TH FLOOR
BOSTON, MA 02110
617.723.1700
www.aecom.com

STATE OF MAINE
DEPARTMENT OF TRANSPORTATION

DATE

FED P/N NO: NA
WIN NO: 017163.02 & 017163.03

LICENSED ARCHITECT KAYLA MICHELLE WENGLER No. 5292 STATE OF MAINE

SIGNATURE

ARCH. LIN. NUMBER ARC5292
DATE JANUARY 17, 2022

PROJECT INFORMATION	
PROGRAM	–
PROJECT MANAGER	–
DESIGNER	AECOM
CONSULTANT	–
PROJECT RESIDENT	–
CONTRACTOR	–
PROJECT COMPLETION DATE	–

MAINE DEPARTMENT OF TRANSPORTATION
ACADIA GATEWAY FACILITY
INTERMODAL AND WELCOME CENTER

STAIR 1 – DETAILS I

SHEET NUMBER
A518

\\na.aecomnet.com\lfs\AMER\Boston-USBOS01\DCS\Projects\TRN\60653001_MaineDOT_Acadia_Gateway\900_CAD_GIS\910_CAD\Sheet\A518.dwg Jan 17, 2022 - 3:20pm

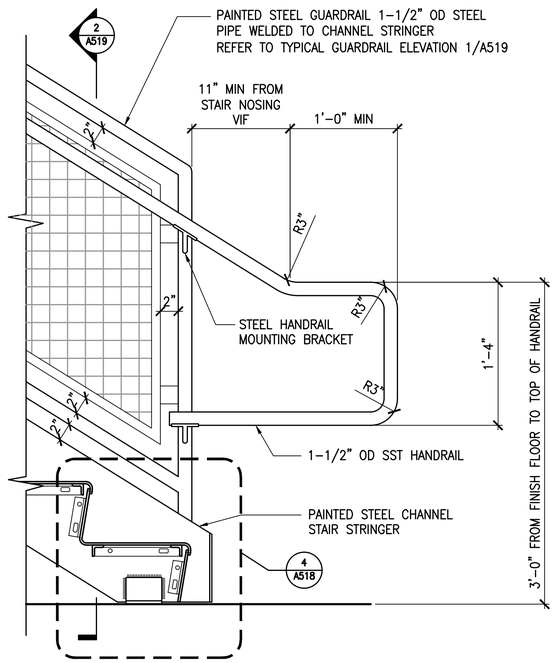

3 SECTION AT BASEMENT HANDRAIL
1 1/2"=1'-0"

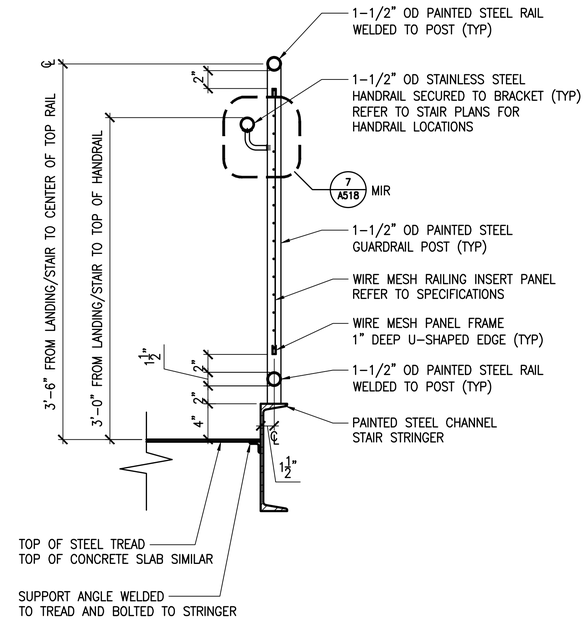

2 SECTION AT GUARDRAIL
1 1/2"=1'-0"

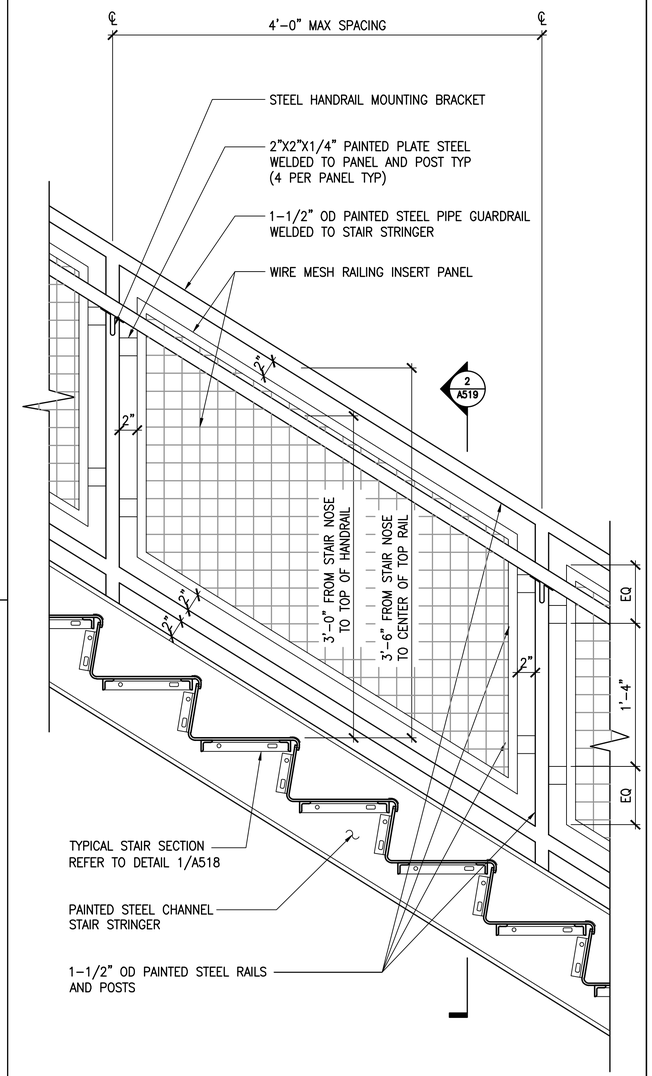

1 TYPICAL GUARDRAIL ELEVATION
1 1/2"=1'-0"

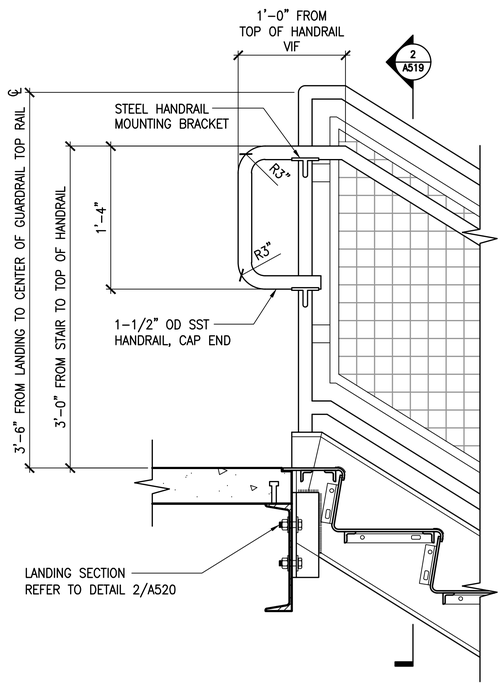

5 SECTION AT GUARDRAIL
1 1/2"=1'-0"

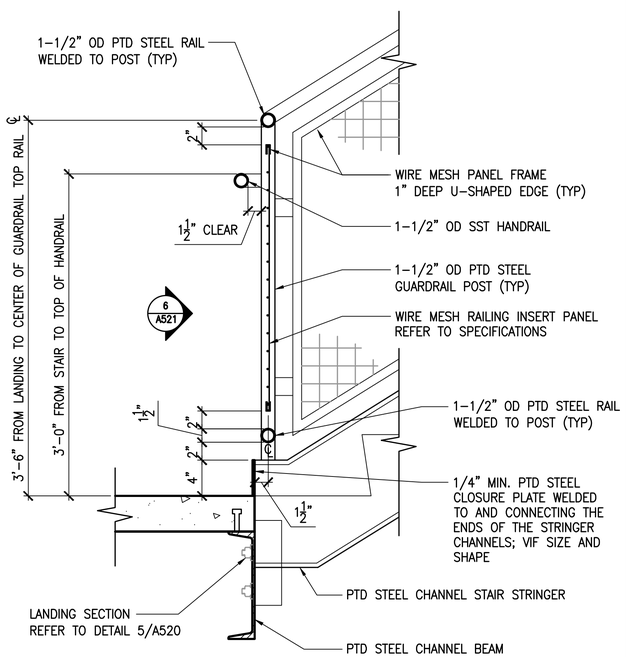

4 SECTION AT GUARDRAIL
1 1/2"=1'-0"

GENERAL NOTES

1. ALL STAIR STRINGERS, CHANNELS, ANGLES, CARRIERS, GUARDRAILS AND MISCELLANEOUS STEEL SHALL BE PAINTED STEEL U.O.N.
2. ALL TREADS TO BE STEEL SLIP-RESISTANT PRE-FINISHED TREADS.
3. ALL HANDRAILS SHALL BE STAINLESS STEEL (SST) W/ PAINTED STEEL BRACKETS. PROVIDE CORROSION RESISTANT GASKET BETWEEN DIFFERENT ALLOYS, AS REQUIRED.

AECOM
1 FEDERAL STREET, 8TH FLOOR
BOSTON, MA 02110
617.723.1700
www.aecom.com

STATE OF MAINE
DEPARTMENT OF TRANSPORTATION

DATE	
FED PIN NO: NA	
WIN NO: 017163.02 & 017163.03	

LICENSED ARCHITECT KATYA MICHELLE WENGER No. 5292 STATE OF MAINE

SIGNATURE

ARCH. LIN. NUMBER ARC5292

DATE JANUARY 17, 2022

PROJECT INFORMATION	
PROGRAM	-
PROJECT MANAGER	-
DESIGNER	AECOM
CONSULTANT	-
PROJECT RESIDENT	-
CONTRACTOR	-
PROJECT COMPLETION DATE	-

MAINE DEPARTMENT OF TRANSPORTATION
ACADIA GATEWAY FACILITY
INTERMODAL AND WELCOME CENTER

STAIR 1 - DETAILS II

SHEET NUMBER
A519

\\na.aecomnet.com\lfs\AMER\Boston-USBOS01\DCS\Projects\TRN\60653001_MaineDOT_Acadia_Gateway\900_CAD_GIS\910_CAD\Sheet\A519.dwg Jan 17, 2022 - 3:21pm

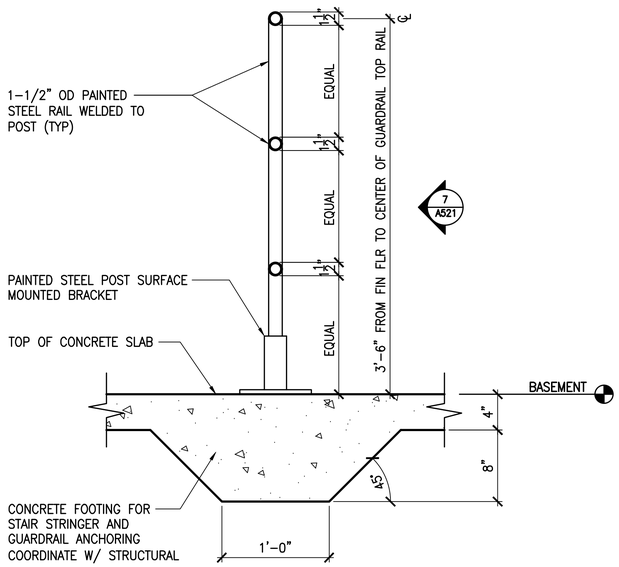

3 TOP MOUNTED GUARDRAIL SECTION
1 1/2"=1'-0"

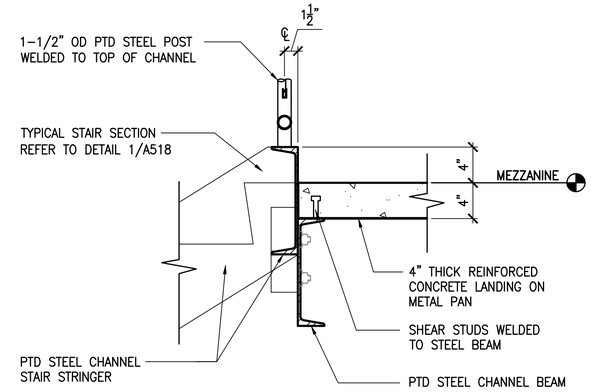

2 LANDING SECTION
1 1/2"=1'-0"

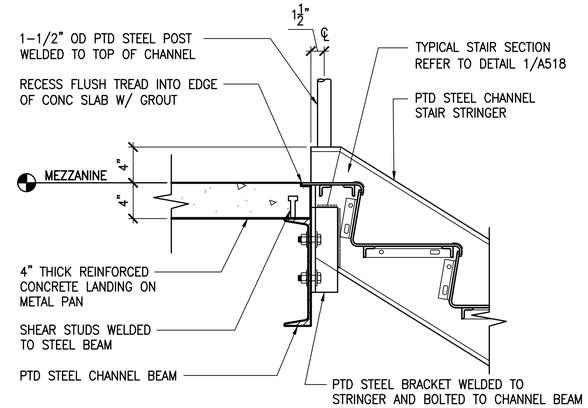

1 LANDING SECTION
1 1/2"=1'-0"

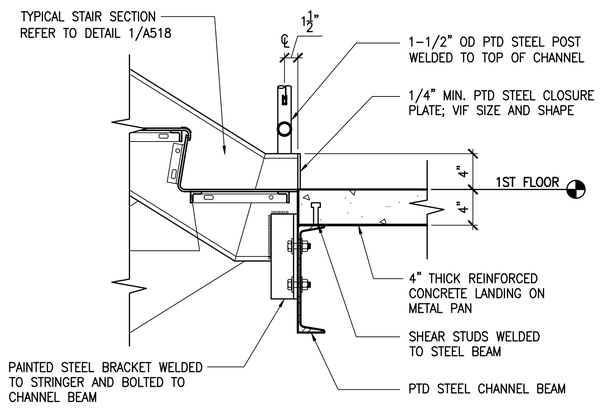

5 LANDING SECTION
1 1/2"=1'-0"

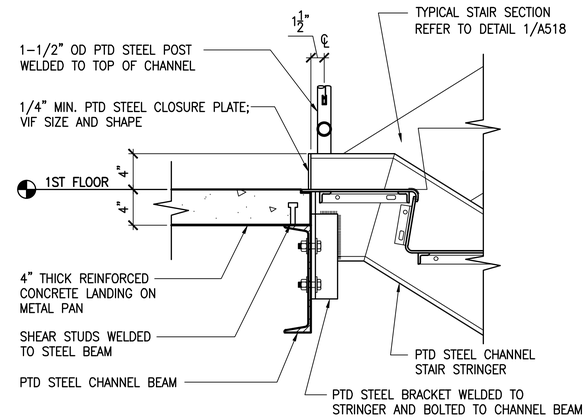

4 LANDING SECTION
1 1/2"=1'-0"

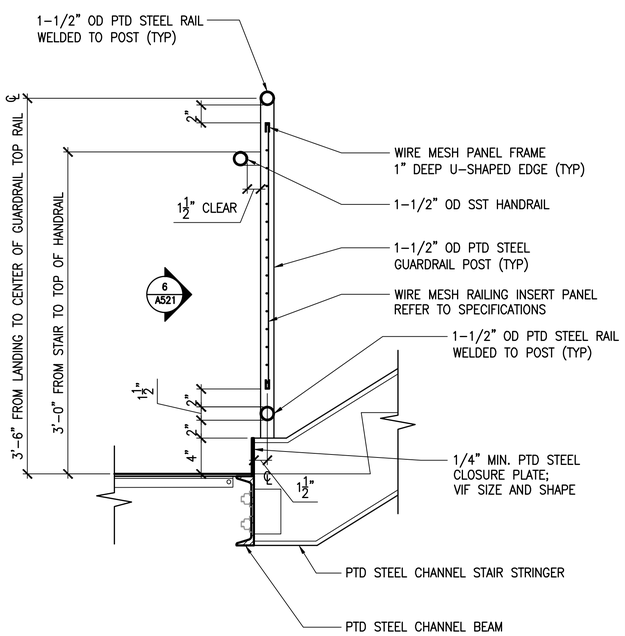

6 SECTION AT GUARDRAIL
1 1/2"=1'-0"

GENERAL NOTES

1. ALL STAIR STRINGERS, CHANNELS, ANGLES, CARRIERS, GUARDRAILS AND MISCELLANEOUS STEEL SHALL BE PAINTED STEEL U.O.N.
2. ALL TREADS TO BE STEEL SLIP-RESISTANT PRE-FINISHED TREADS.
3. ALL HANDRAILS SHALL BE STAINLESS STEEL (SST) W/ PAINTED STEEL BRACKETS. PROVIDE CORROSION RESISTANT GASKET BETWEEN DIFFERENT ALLOYS, AS REQUIRED.

AECOM
1 FEDERAL STREET, 8TH FLOOR
BOSTON, MA 02110
617.723.1700
www.aecom.com

STATE OF MAINE
DEPARTMENT OF TRANSPORTATION

DATE	
FED PIN NO: NA	
WIN NO: 017163.02 & 017163.03	

LICENSED ARCHITECT KAYLA MICHELLE WENGLER No. 5292 STATE OF MAINE

PROJECT INFORMATION	
PROGRAM	–
PROJECT MANAGER	–
DESIGNER	AECOM
CONSULTANT	–
PROJECT RESIDENT	–
CONTRACTOR	–
PROJECT COMPLETION DATE	–

SIGNATURE
ARCH. LIN. NUMBER ARC5292
DATE JANUARY 17, 2022

MAINE DEPARTMENT OF TRANSPORTATION
ACADIA GATEWAY FACILITY
INTERMODAL AND WELCOME CENTER
STAIR 1 – DETAILS III

SHEET NUMBER
A520

\\na.aecomnet.com\lfs\AMER\Boston-USBOS01\DCS\Projects\TRN\60653001_MaineDOT_Acadia_Gateway\900_CAD_GIS\910_CAD\Sheet\A520.dwg Jan 17, 2022 - 3:21pm

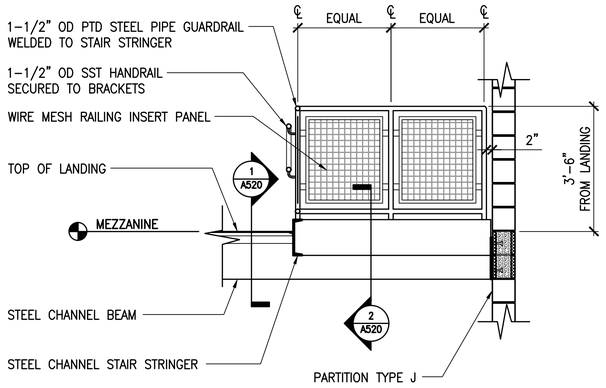

3 GUARDRAIL ELEVATION
1/2"=1'-0"

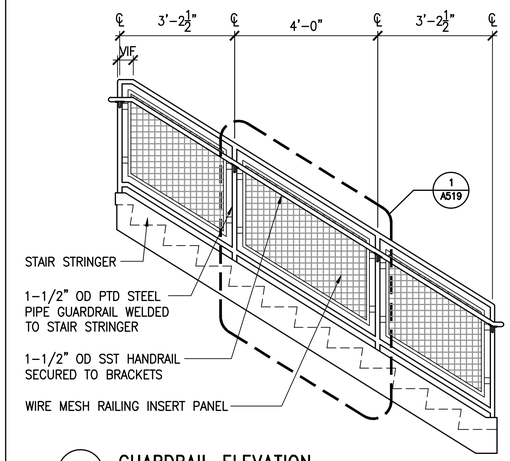

2 GUARDRAIL ELEVATION
1/2"=1'-0"

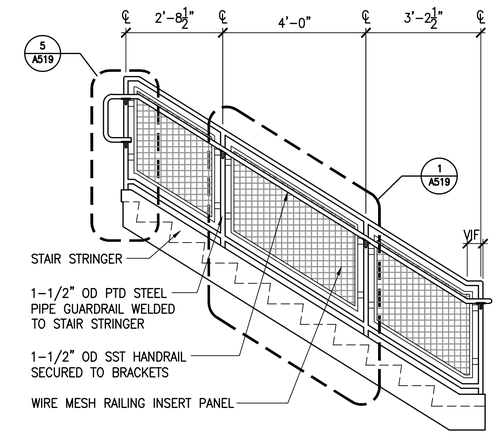

1 GUARDRAIL ELEVATION
1/2"=1'-0"

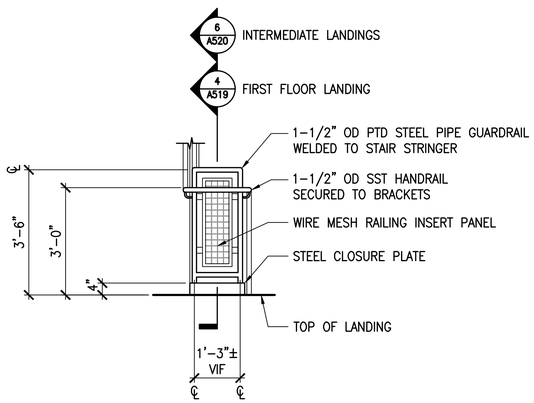

6 GUARDRAIL ELEVATION
1/2"=1'-0"

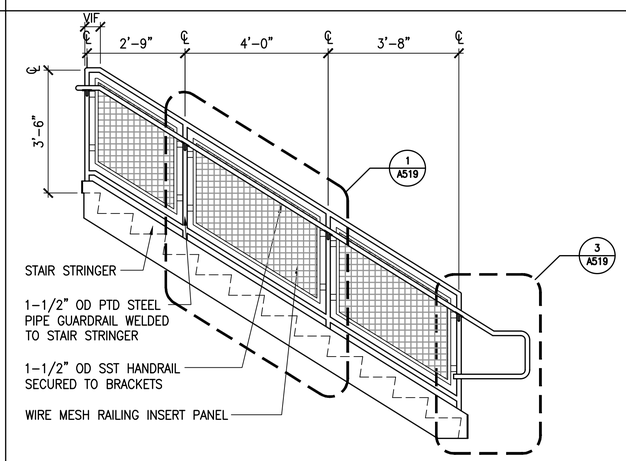

5 GUARDRAIL ELEVATION
1/2"=1'-0"

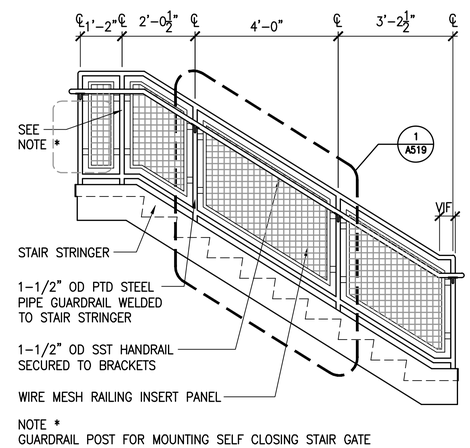

4 GUARDRAIL ELEVATION
1/2"=1'-0"

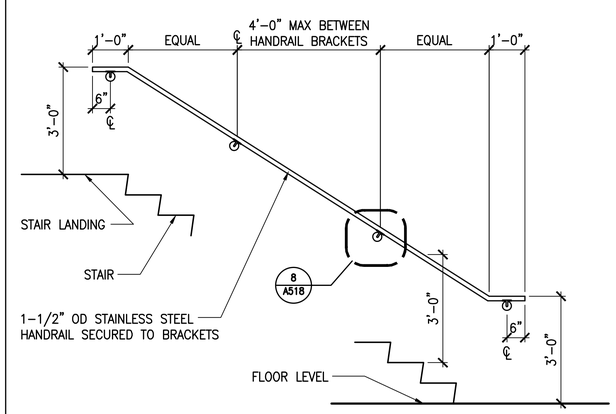

8 TYPICAL WALL MOUNTED HANDRAIL ELEVATION
1/2"=1'-0"

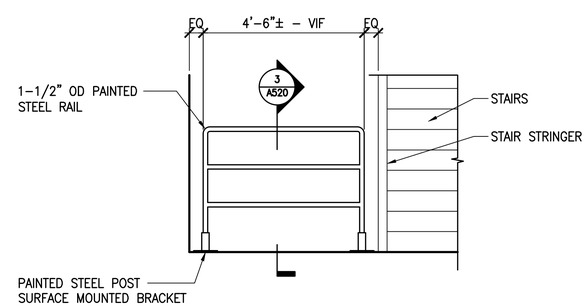

7 GUARDRAIL ELEVATION
1/2"=1'-0"

GENERAL NOTES

1. ALL STAIR STRINGERS, CHANNELS, ANGLES, CARRIERS, GUARDRAILS AND MISCELLANEOUS STEEL SHALL BE PAINTED STEEL U.O.N.
2. ALL TREADS TO BE STEEL SLIP-RESISTANT PRE-FINISHED TREADS.
3. ALL HANDRAILS SHALL BE STAINLESS STEEL (SST) W/ PAINTED STEEL BRACKETS. PROVIDE CORROSION RESISTANT GASKET BETWEEN DIFFERENT ALLOYS, AS REQUIRED.
4. REFER TO A830 & A831 FOR ALL PARTITION TYPES.

AECOM
1 FEDERAL STREET, 8TH FLOOR
BOSTON, MA 02110
617.723.1700
www.aecom.com

STATE OF MAINE
DEPARTMENT OF TRANSPORTATION

	DATE

FED PIN NO: NA
WIN NO: 017163.02 & 017163.03

LICENSED ARCHITECT KATYA MICHELLE WENGLER No. 5292 STATE OF MAINE

SIGNATURE	
ARCH. LIN. NUMBER	ARC5292
DATE	JANUARY 17, 2022

PROJECT	INFORMATION
PROGRAM	–
PROJECT MANAGER	–
DESIGNER	AECOM
CONSULTANT	–
PROJECT RESIDENT	–
CONTRACTOR	–
PROJECT COMPLETION DATE	–

MAINE DEPARTMENT OF TRANSPORTATION
ACADIA GATEWAY FACILITY
INTERMODAL AND WELCOME CENTER

STAIR 1 – DETAILS IV

SHEET NUMBER
A521

\\na.aecomnet.com\lfs\AMER\Boston-USBOS01\DCS\Projects\TRN\60653001_MaineDOT_Acadia_Gateway\900_CAD_GIS\910_CAD\Sheet\A521.dwg Jan 17, 2022 - 3:22pm

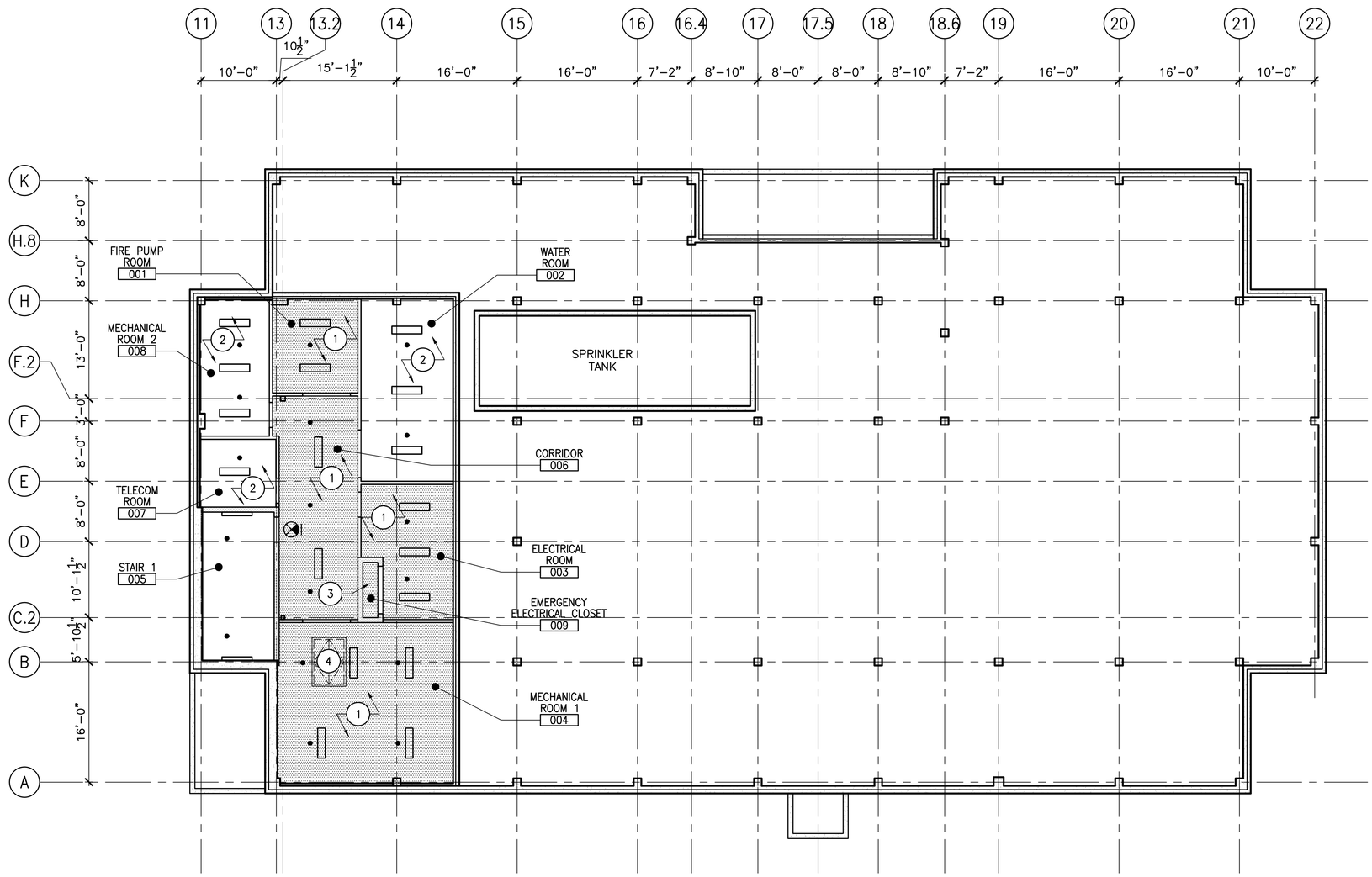

1 BASEMENT REFLECTED CEILING PLAN
1/8"=1'-0"

KEY NOTES

1. SPRAY APPLIED 1 HOUR RATED FIRE PROOFING AND SPRAY APPLIED 1 HOUR RATED FIRE PROOFING AROUND BEAMS
2. SPRAY APPLIED THERMAL INSULATION; R 3.5 MIN.
3. SPRAY APPLIED 2 HOUR RATED FIRE PROOFING
4. MECHANICAL ROOM ACCESS FLOOR HATCH (ABOVE)

LEGEND

- 1'X4' SURFACE LIGHT
- 4' WALL MOUNTED STAIRWAY LIGHT
- SPRINKLER HEAD
- EXIT SIGN
- SPRAY APPLIED FIRE PROOFING

GENERAL NOTES

1. EXPOSED STRUCTURE IN BASEMENT SHALL BE PRIMED ONLY. TYPICAL UNLESS OTHERWISE NOTED.
2. REFER TO ELECTRICAL DRAWINGS FOR LIGHT FIXTURE DESIGNATIONS AND FIXTURE TYPES.
3. ELECTRICIAL ROOM (009) AND EMERGENCY ELECTRICAL CLOSET (003) ARE 2 HOUR RATED CONSTRUCTION AND NON-SPRINKLERED

PROJECT KEY PLAN

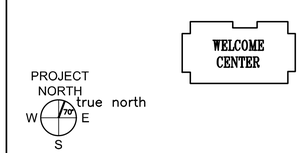

AECOM
1 FEDERAL STREET, 8TH FLOOR
BOSTON, MA 02110
617.723.1700
www.aecom.com

STATE OF MAINE
DEPARTMENT OF TRANSPORTATION

	DATE

FED P/N NO: NA
WIN NO: 017163.02 & 017163.03

LICENSED ARCHITECT KAYLA MICHELLE WENGLER No. 5292 STATE OF MAINE

SIGNATURE
ARCH. LIN. NUMBER ARC5292
DATE JANUARY 17, 2022

PROJECT INFORMATION	
PROGRAM	–
PROJECT MANAGER	–
DESIGNER	AECOM
CONSULTANT	–
PROJECT RESIDENT	–
CONTRACTOR	–
PROJECT COMPLETION DATE	–

MAINE DEPARTMENT OF TRANSPORTATION
ACADIA GATEWAY FACILITY
INTERMODAL AND WELCOME CENTER

BASEMENT
REFLECTED CEILING PLAN

SHEET NUMBER
A601

\\na.aecomnet.com\lfs\AMER\Boston-USBOS01\DCS\Projects\TRN\60653001_MaineDOT_Acadia_Gateway\900_CAD_GIS\910_CAD\Sheet\A601.dwg Jan 17, 2022 - 3:22pm

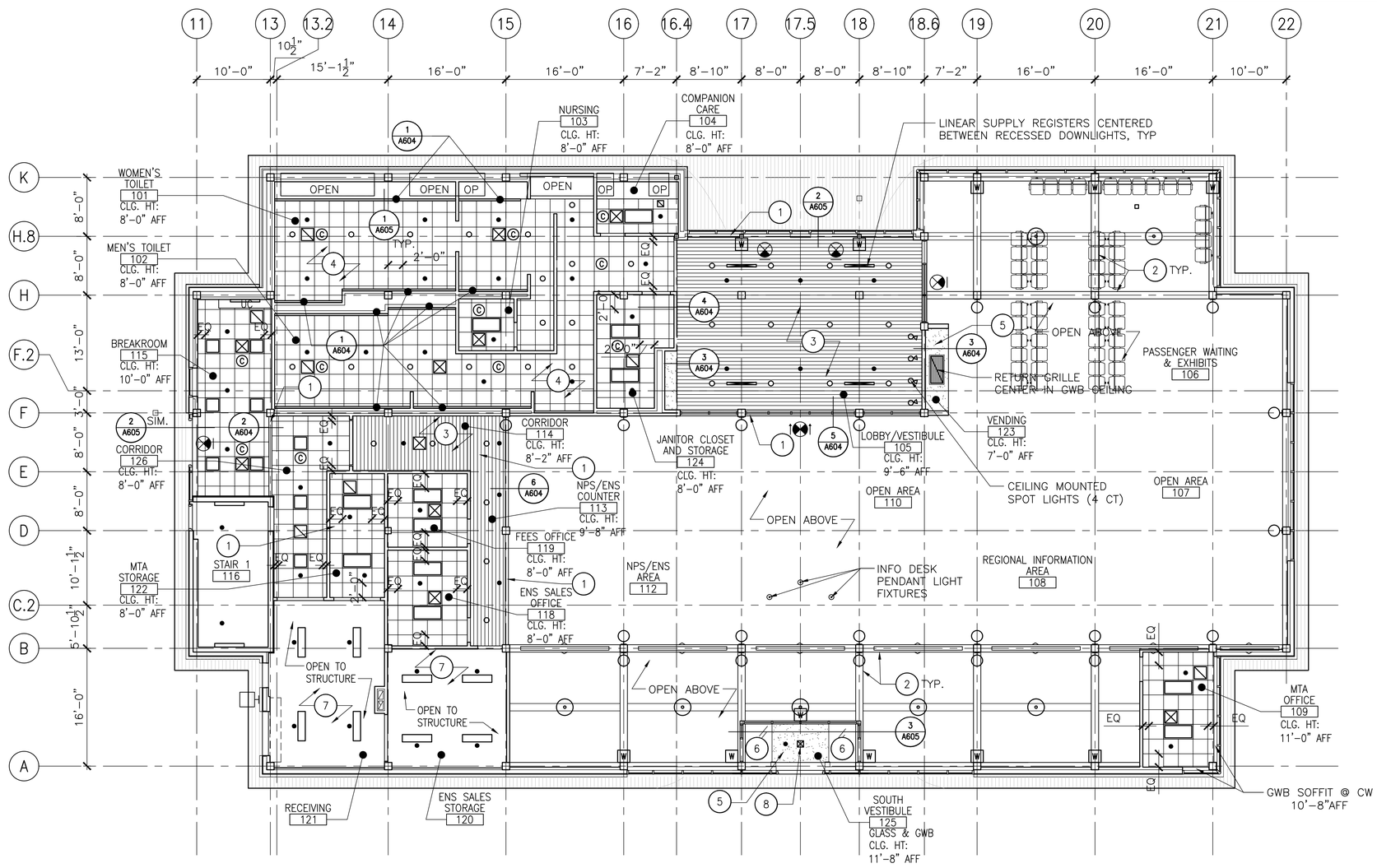

1 FIRST FLOOR REFLECTED CEILING PLAN
1/8"=1'-0"

LEGEND - CONT.

- WOOD CEILING
- 2'x2' SUSPENDED CEILING GRID
- 2'x2' SUPPLY REGISTER
- LINEAR SUPPLY REGISTER
- 2'x2' RETURN REGISTER
- 1'x1' RETURN REGISTER

KEY NOTES

1. PAINTED GWB SOFFIT / CEILINGS
2. WOOD STRUCTURE, REFER TO STRUCTURAL DRAWINGS FOR MORE INFO.
3. WOOD CEILING SYSTEM
4. ACT CEILING
5. GWB CEILING
6. GLASS CEILING
7. PAINTED EXPOSED WOOD JOIST & DECK, REFER TO FINISH SCHEDULE
8. SUPPLY DUCT AND REGISTER, REFER TO MECHANICAL DRAWINGS

LEGEND

- RECESSED DOWNLIGHT
- COLUMN MOUNTED UPLIGHT FIXTURE
- 2'x4' RECESSED LIGHT
- 2'x2' RECESSED LIGHT
- 1'X4' SURFACE LIGHT
- 4' WALL MOUNTED STAIRWAY LIGHT
- CYLINDER PENDANT LIGHT FIXTURE
- DECORATIVE PENDANT LIGHT FIXTURE
- INFO DESK PENDANT LIGHT FIXTURE
- EXTERIOR WALL MOUNTED LIGHT FIXTURE
- CONTINUOUS SLOT LIGHT
- LINEAR TRUSS UPLIGHT
- UC UNDER COUNTER LIGHT
- CEILING MOUNTED SPOT LIGHT
- EXIT SIGN
- RECESSED CEILING SPEAKER
- W WALL MOUNTED SPEAKER
- SPRINKLER HEAD
- GWB CEILING

GENERAL NOTES

1. REFER TO ELECTRICAL DRAWINGS FOR LIGHT FIXTURE DESIGNATIONS AND FIXTURE TYPES

PROJECT KEY PLAN

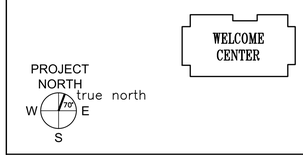

AECOM
1 FEDERAL STREET, 8TH FLOOR
BOSTON, MA 02110
617.723.1700
www.aecom.com

STATE OF MAINE
DEPARTMENT OF TRANSPORTATION

	DATE

FED PIN NO: NA
WIN NO: 017163.02 & 017163.03

LICENSED ARCHITECT KATLA MICHELLE WENGLER No. 5292 STATE OF MAINE

SIGNATURE
ARCH. LIN. NUMBER ARC5292
DATE JANUARY 17, 2022

PROJECT INFORMATION	
PROGRAM	–
PROJECT MANAGER	–
DESIGNER	AECOM
CONSULTANT	–
PROJECT RESIDENT	–
CONTRACTOR	–
PROJECT COMPLETION DATE	–

MAINE DEPARTMENT OF TRANSPORTATION
ACADIA GATEWAY FACILITY
INTERMODAL AND WELCOME CENTER

FIRST FLOOR
REFLECTED CEILING PLAN

SHEET NUMBER
A602

\\na.aecomnet.com\lfs\AMER\Boston-USBOS01\DCS\Projects\TRN\60653001_MaineDOT_Acadia_Gateway\900_CAD_GIS\910_CAD\Sheet\A602.dwg Mar 08, 2022 - 4:07pm

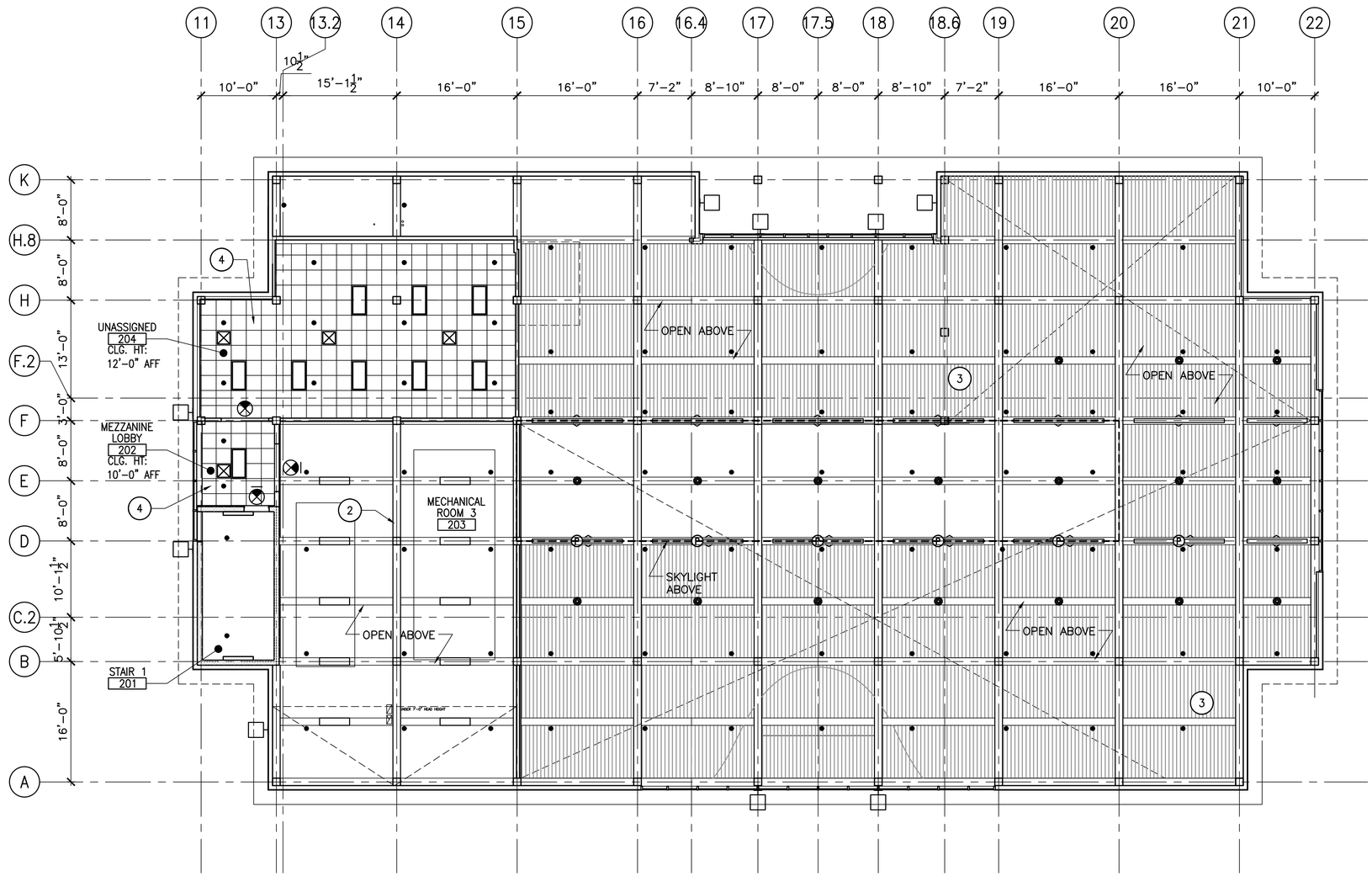

1 MEZZANINE REFLECTED CEILING PLAN
1/8"=1'-0"

KEY NOTES

2. WOOD STRUCTURE, REFER TO STRUCTURAL DRAWINGS FOR MORE INFO.
3. WOOD CEILING
4. ACT CEILING

LEGEND

- 2'x4' RECESSED LIGHT
- 4' WALL MOUNTED STAIRWAY LIGHT
- 1'X4' SURFACE LIGHT
- CYLINDER PENDANT LIGHT FIXTURE
- LINEAR TRUSS UPLIGHT
- PENDANT SPEAKER
- EXTERIOR WALL MOUNTED LIGHT FIXTURE
- SPRINKLER HEAD
- EXIT SIGN
- GWB CEILING
- WOOD CEILING
- 2'x2' SUSPENDED CEILING GRID
- 2'x2' SUPPLY REGISTER

GENERAL NOTES

1. REFER TO ELECTRICAL DRAWINGS FOR LIGHT FIXTURE DESIGNATIONS AND FIXTURE TYPES
2. PROVIDE GWB SMOKE PARTITION CEILING BETWEEN WOOD TIMBERS IN CORRIDOR 216, LOCATED BETWEEN COLUMN LINES 15 AND 16, SEE SHEET A003.

PROJECT KEY PLAN

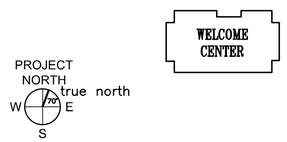

AECOM
1 FEDERAL STREET, 8TH FLOOR
BOSTON, MA 02110
617.723.1700
www.aecom.com

STATE OF MAINE
DEPARTMENT OF TRANSPORTATION

DATE	

FED P/N NO: NA
WIN NO: 017163.02 & 017163.03

LICENSED ARCHITECT KATIA MICHELLE WENGLER No. 5292 STATE OF MAINE

SIGNATURE
ARCH. LIN. NUMBER ARC5292
DATE JANUARY 17, 2022

PROJECT INFORMATION	
PROGRAM	-
PROJECT MANAGER	-
DESIGNER	AECOM
CONSULTANT	-
PROJECT RESIDENT	-
CONTRACTOR	-
PROJECT COMPLETION DATE	-

MAINE DEPARTMENT OF TRANSPORTATION
ACADIA GATEWAY FACILITY
INTERMODAL AND WELCOME CENTER

MEZZANINE
REFLECTED CEILING PLAN

SHEET NUMBER
A603

\\na.aecomnet.com\lfs\AMER\Boston-USBOS01\DCS\Projects\TRN\60653001_MaineDOT_Acadia_Gateway\900_CAD_GIS\910_CAD\Sheet\A603.dwg Jan 17, 2022 - 3:24pm

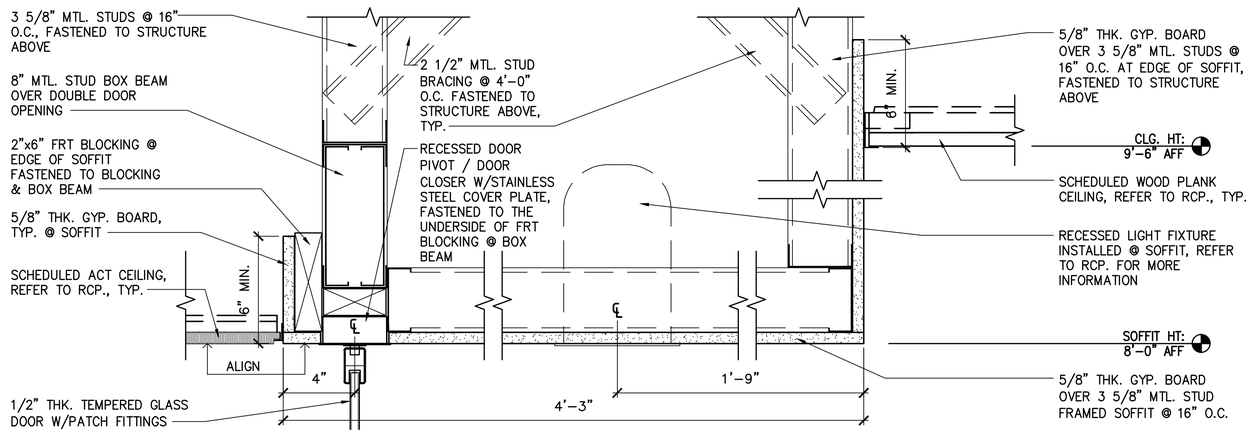

4 GWB SOFFIT / CEILING TRANSITION @ ENTRY TO BATHROOMS
3"=1'-0"

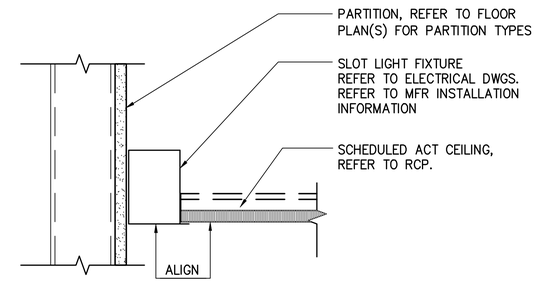

1 LIGHT COVE DETAIL
3"=1'-0"

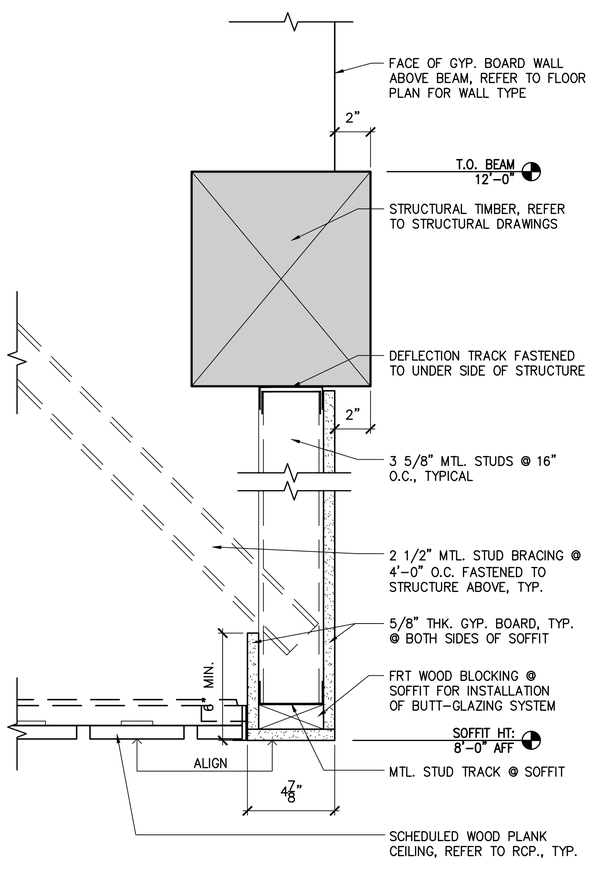

6 GWB SOFFIT @ ENS SALES / SECOND FLOOR
3"=1'-0"

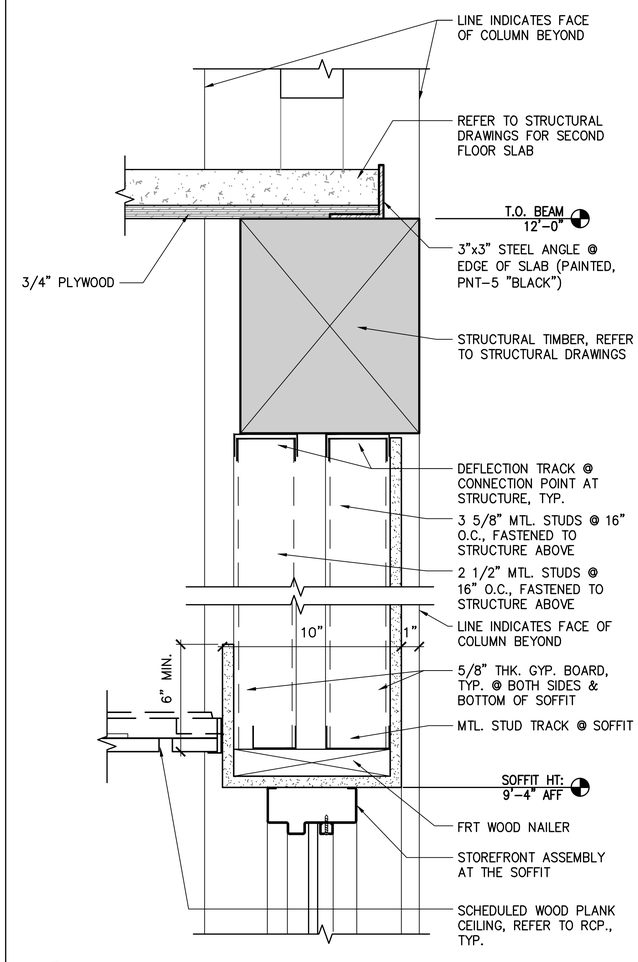

5 GWB SOFFIT @ ENTRY LOBBY / SECOND FLOOR
3"=1'-0"

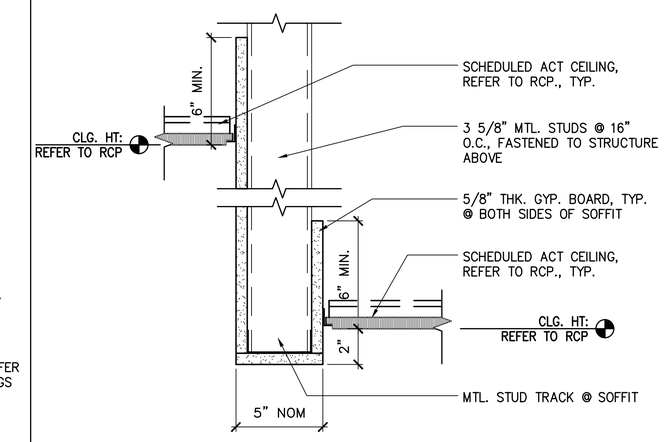

2 TYP. GWB SOFFIT @ ACT BOTH SIDES
3"=1'-0"

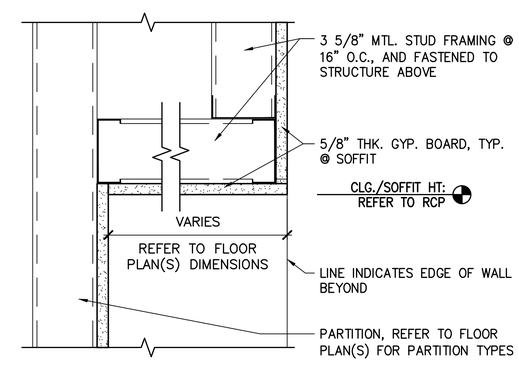

3 TYP. GWB CEILING/SOFFIT @ TRANSITION
3"=1'-0"

AECOM
1 FEDERAL STREET, 8TH FLOOR
BOSTON, MA 02110
617.723.1700
www.aecom.com

STATE OF MAINE
DEPARTMENT OF TRANSPORTATION

DATE

FED P/N NO: NA
WIN NO: 017163.02 & 017163.03

LICENSED ARCHITECT KARLA MICHELLE WENGLER No. 5292 STATE OF MAINE

SIGNATURE
ARCH. LIN. NUMBER ARC5292
DATE JANUARY 17, 2022

PROJECT INFORMATION	
PROGRAM	-
PROJECT MANAGER	-
DESIGNER	AECOM
CONSULTANT	-
PROJECT RESIDENT	-
CONTRACTOR	-
PROJECT COMPLETION DATE	-

MAINE DEPARTMENT OF TRANSPORTATION
ACADIA GATEWAY FACILITY
INTERMODAL AND WELCOME CENTER
REFLECTED CEILING DETAILS I

SHEET NUMBER
A604

\\na.aecomnet.com\lfs\AMER\Boston-USBOS01\DCS\Projects\TRN\60653001_MaineDOT_Acadia_Gateway\900_CAD_GIS\910_CAD\Sheet\A604.dwg Jan 17, 2022 - 3:24pm

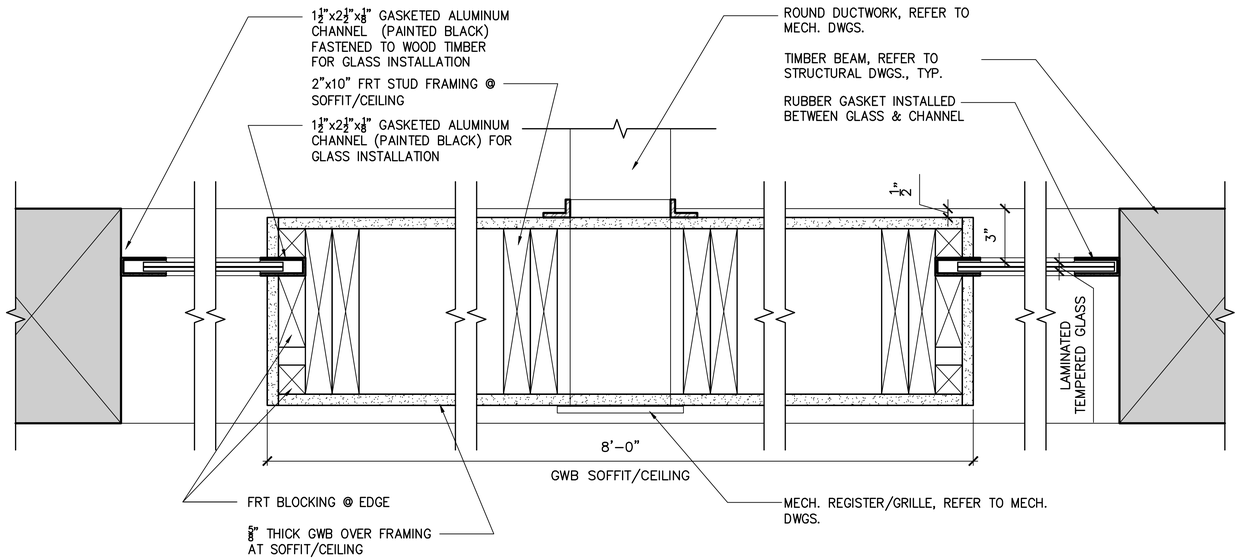

3 SECTION DETAIL @ GWB SOFFIT/CEILING & GLASS CEILING AT REAR VESTIBULE
3"=1'-0"

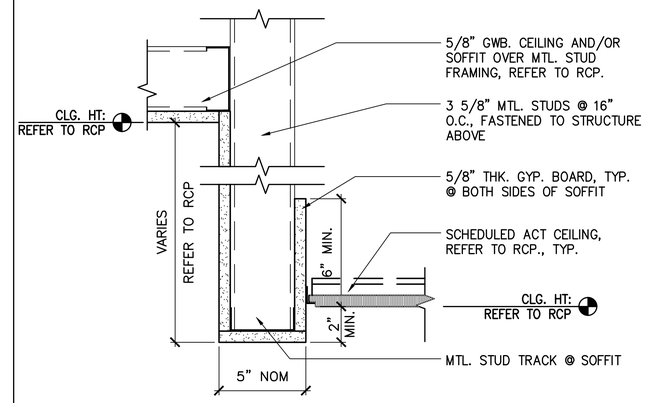

1 TYP. GWB SOFFIT @ ACT ONE SIDE
3"=1'-0"

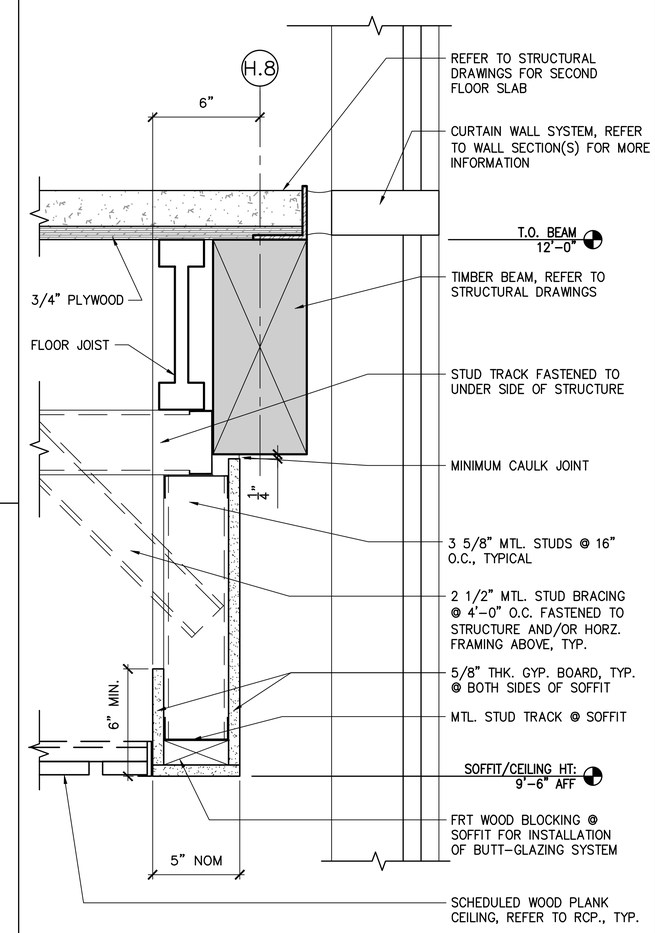

2 GWB SOFFIT @ ENTRY LOBBY OVER EXTERIOR DOORS
3"=1'-0"

AECOM
1 FEDERAL STREET, 8TH FLOOR
BOSTON, MA 02110
617.723.1700
www.aecom.com

STATE OF MAINE
DEPARTMENT OF TRANSPORTATION

DATE

FED PIN NO: NA
WIN NO: 017163.02 & 017163.03

LICENSED ARCHITECT KAYLA MICHELLE WENGLER No. 5292 STATE OF MAINE

SIGNATURE
ARCH. LIN. NUMBER ARC5292
DATE JANUARY 17, 2022

PROJECT INFORMATION	
PROGRAM	–
PROJECT MANAGER	–
DESIGNER	AECOM
CONSULTANT	–
PROJECT RESIDENT	–
CONTRACTOR	–
PROJECT COMPLETION DATE	–

MAINE DEPARTMENT OF TRANSPORTATION
ACADIA GATEWAY FACILITY
INTERMODAL AND WELCOME CENTER
REFLECTED CEILING DETAILS II

SHEET NUMBER
A605

\\na.aecomnet.com\lfs\AMER\Boston-USBOS01\DCS\Projects\TRN\60653001_MaineDOT_Acadia_Gateway\900_CAD_GIS\910_CAD\Sheet\A605.dwg Jan 17, 2022 - 3:24pm

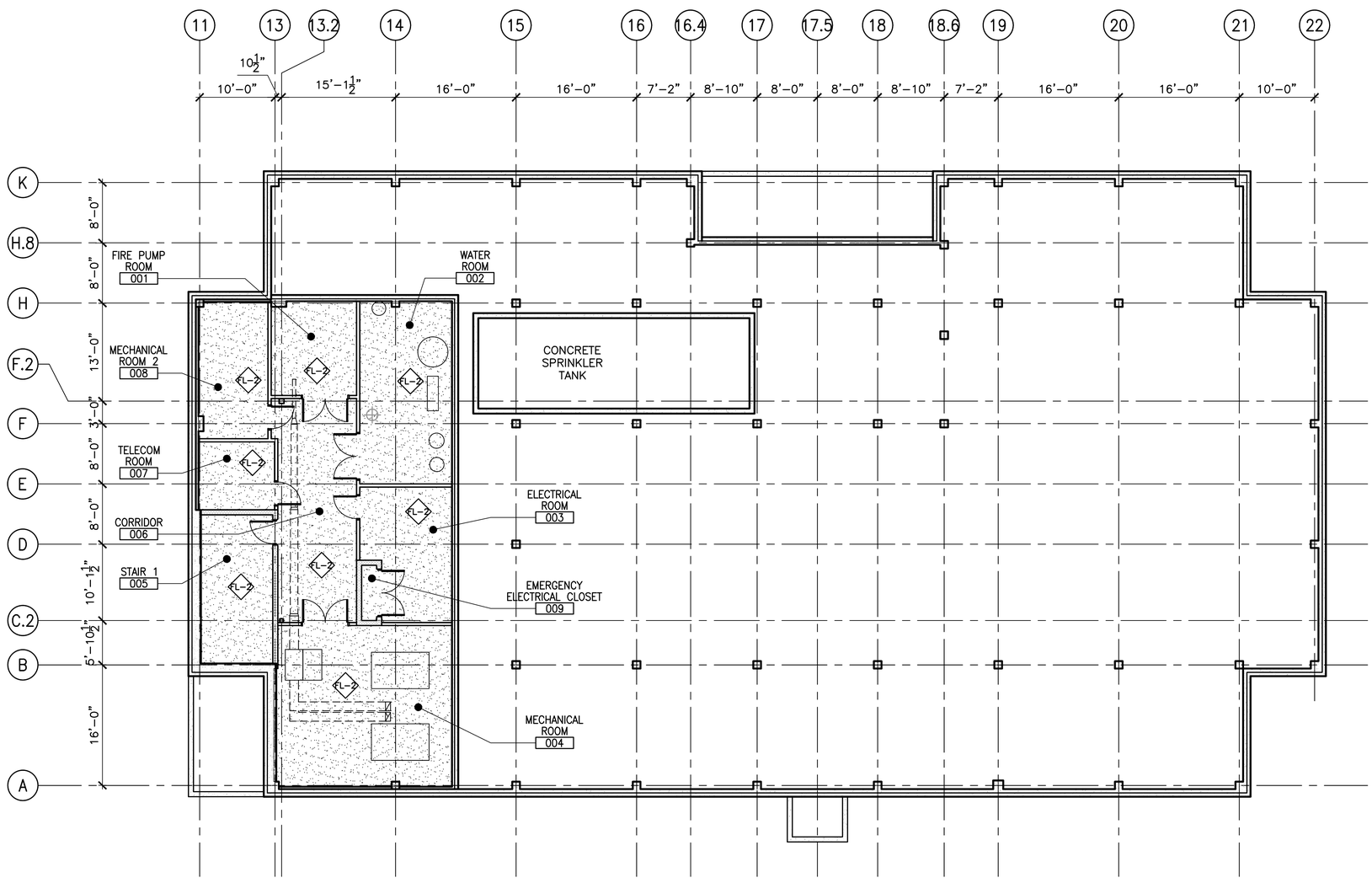

1 BASEMENT FINISH FLOOR PLAN
1/8"=1'-0"

FINISH LEGEND

SEALED CONCRETE

Z-1 MATERIAL KEY SEE SHEET A614

GENERAL NOTES

1. SEE FINISH SCHEDULE SHEET A614 FOR MATERIAL KEY

PROJECT KEY PLAN

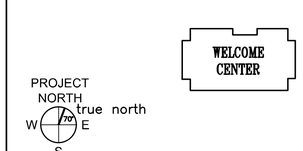

AECOM
1 FEDERAL STREET, 8TH FLOOR
BOSTON, MA 02110
617.723.1700
www.aecom.com

STATE OF MAINE
DEPARTMENT OF TRANSPORTATION

DATE

FED PIN NO: NA

WIN NO: 017163.02 & 017163.03

LICENSED ARCHITECT KARYLA MICHELLE WENGLER No. 5292 STATE OF MAINE

SIGNATURE

ARCH. LIN. NUMBER ARC5292

DATE JANUARY 17, 2022

PROJECT INFORMATION	
PROGRAM	–
PROJECT MANAGER	–
DESIGNER	AECOM
CONSULTANT	–
PROJECT RESIDENT	–
CONTRACTOR	–
PROJECT COMPLETION DATE	–

MAINE DEPARTMENT OF TRANSPORTATION
ACADIA GATEWAY FACILITY
INTERMODAL AND WELCOME CENTER

BASEMENT FINISH FLOOR PLAN

SHEET NUMBER
A611

\\na.aecomnet.com\lfs\AMER\Boston-USBOS01\DCS\Projects\TRN\60653001_MaineDOT_Acadia_Gateway\900_CAD_GIS\910_CAD\Sheet\A611.dwg Jan 17, 2022 - 3:25pm

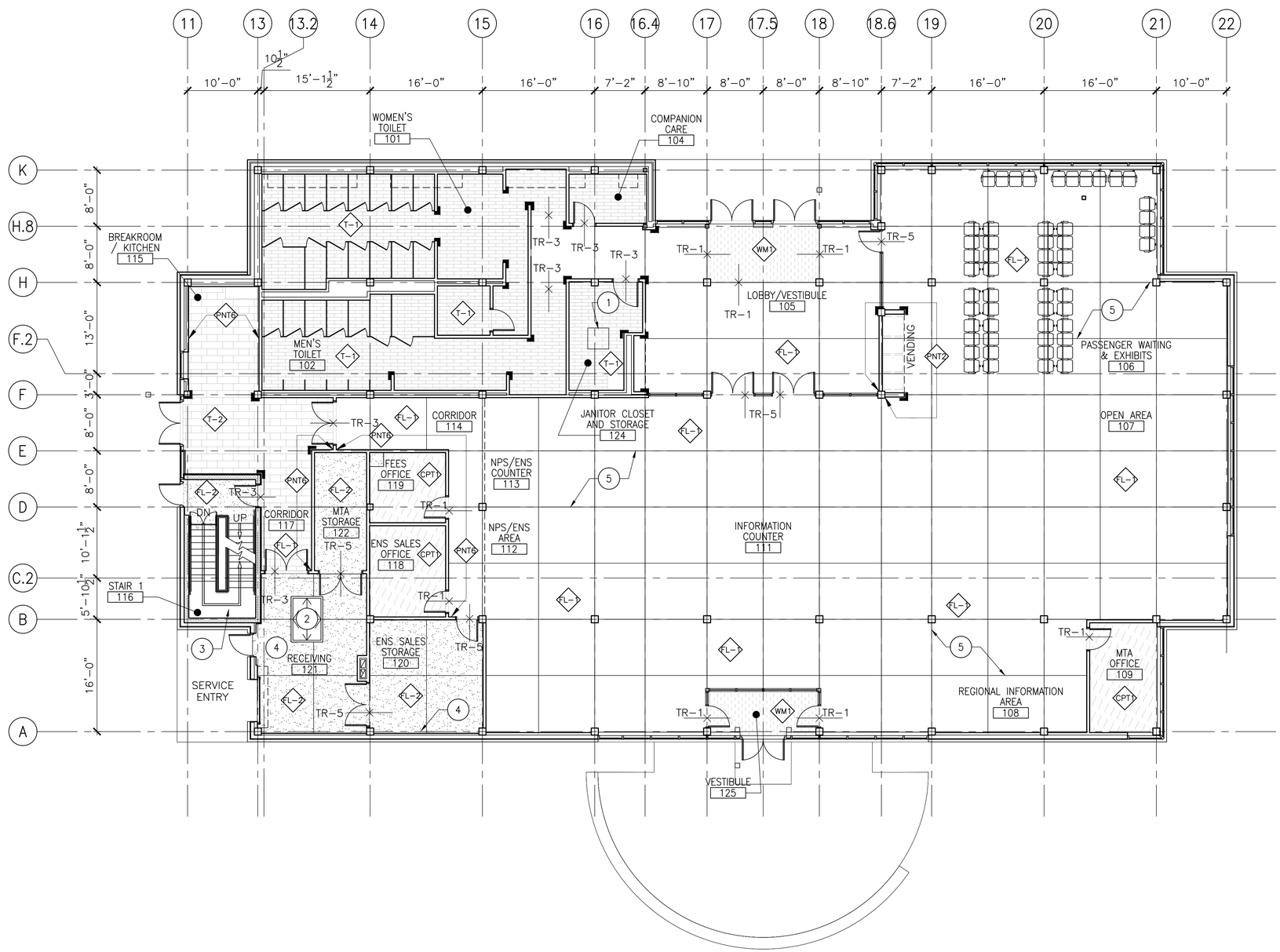

1 FIRST FLOOR FINISH FLOOR PLAN
1/8"=1'-0"

KEY NOTES

1. SPRINKLER TANK ACCESS MANHOLE W/ EMBOSSED NON-SLIP PATTERN, REFER TO SPECIFICATIONS
2. MECHANICAL ROOM ACCESS FLOOR HATCH W/ EMBOSSED NON-SLIP PATTERN
3. ALL STAIRS SHALL BE METAL W/ NON-SLIP FINISH, SEE STAIR DETAILS
4. EXPOSED STRUCTURE, TO BE PAINTED (PNT-4)
5. CONTROL JOINT IN POLISHED CONCRETE SLAB, TYP.

FINISH LEGEND

- STAINED POLISHED CONCRETE
- SEALED CONCRETE
- CARPET
- WALK-OFF MAT
- FLOOR TILE (12"X12" & 12"X24")
- FLOOR TILE (6"X24")
- FLOOR DRAIN
- TRANSITION
- Z-1 MATERIAL KEY SEE SHEET A614

TRANSITION LEGEND

- TR-1 = CARPET TO CONCRETE
- TR-3 = TILE TO CONCRETE
- TR-4 = VCT TO CONCRETE
- TR-5 = CONCRETE TO CONCRETE SCORE/CUT IN CONCRETE @ DOOR/OPENING
- TR-6 = VCT TO CARPET

NOTE: REFER TO SPECIFICATIONS FOR TRANSITION PRODUCT TYPES

GENERAL NOTES

1. PROVIDE APPLIED STAINLESS STEEL CORNER GUARDS (SCHLUTER – ECK-K, 2" WIDE, LEGS) (MIN. 6'-0" TALL) AT ALL OUTSIDE CORNERS AS INDICATED ON FINISH PLAN BY ┓, REFER TO ELEVATIONS FOR MORE INFORMATION.
2. PROVIDE INTEGRAL STAINLESS STEEL CORNER GUARDS (SCHLUTER – ECK-E, SIZE TO BE DETERMINED BY TILE THICKNESS) (MIN. 6'-0" TALL) AT ALL OUTSIDE CORNERS WHERE WALL TILE IS TO BE INSTALLED, REFER TO INTERIOR ELEVATIONS FOR HTS. & MORE INFORMATION.
3. SEE FINISH SCHEDULE SHEET A614 FOR MATERIAL KEY

PROJECT KEY PLAN

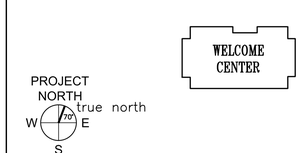

AECOM
1 FEDERAL STREET, 8TH FLOOR
BOSTON, MA 02110
617.723.1700
www.aecom.com

STATE OF MAINE
DEPARTMENT OF TRANSPORTATION

	DATE

FED PIN NO: NA
WIN NO: 017163.02 & 017163.03

LICENSED ARCHITECT KAYLA MICHELLE WENGLER No. 5292 STATE OF MAINE

SIGNATURE

ARCH. LIN. NUMBER ARC5292

DATE JANUARY 17, 2022

PROJECT INFORMATION	
PROGRAM	–
PROJECT MANAGER	–
DESIGNER	AECOM
CONSULTANT	–
PROJECT RESIDENT	–
CONTRACTOR	–
PROJECT COMPLETION DATE	–

MAINE DEPARTMENT OF TRANSPORTATION
ACADIA GATEWAY FACILITY
INTERMODAL AND WELCOME CENTER

FIRST FLOOR FINISH FLOOR PLAN

SHEET NUMBER
A612

\\na.aecomnet.com\lfs\AMER\Boston-USBOS01\DCS\Projects\TRN\60653001_MaineDOT_Acadia_Gateway\900_CAD_GIS\910_CAD\Sheet\A612.dwg Mar 08, 2022 - 4:08pm

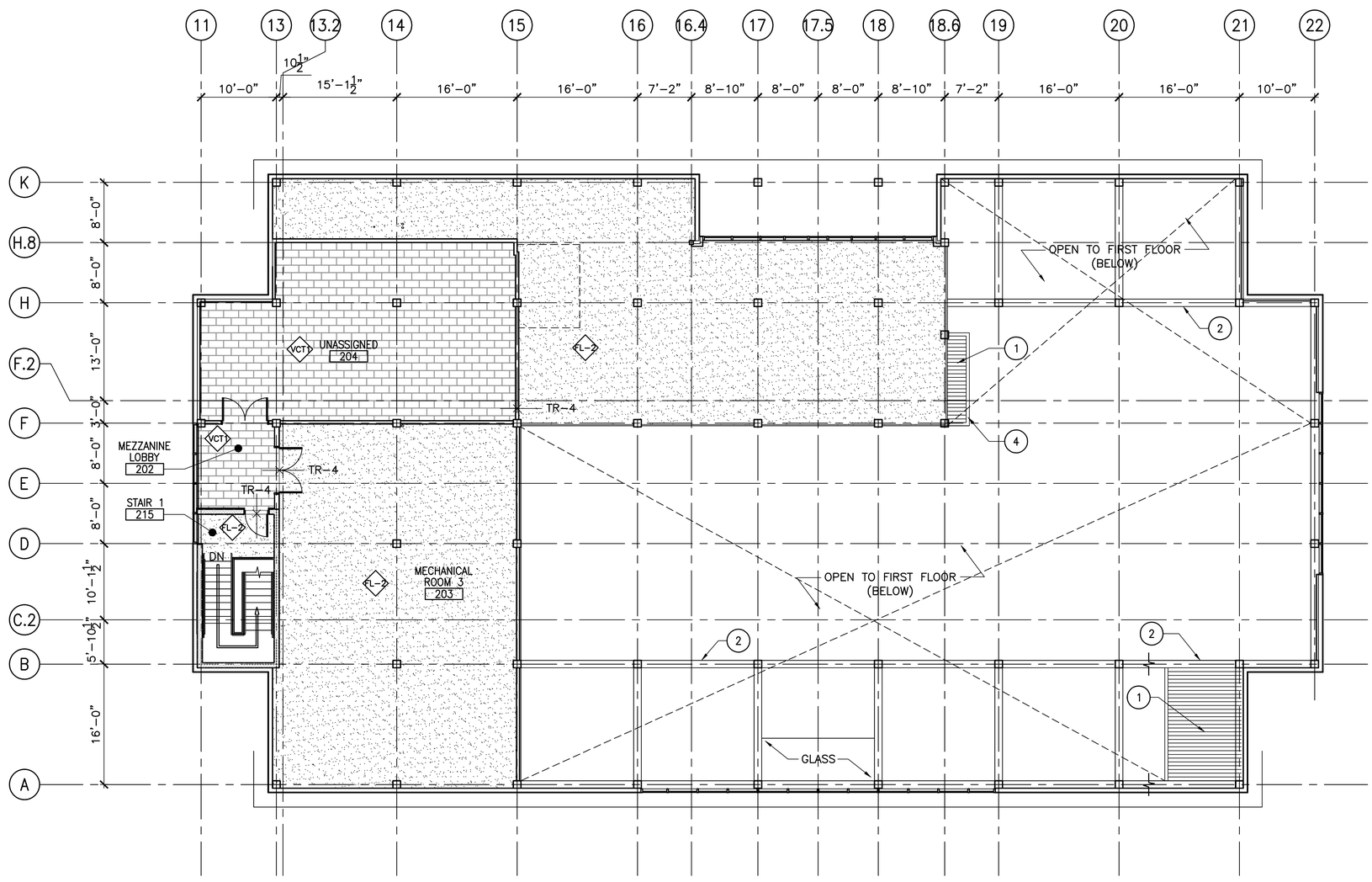

1 MEZZANINE FINISH FLOOR PLAN
1/8"=1'-0"

KEY NOTES

1. WOOD TONGUE AND GROVE DECK – MATCH WOOD CEILING MATERIAL, FINISH, COLOR AND STAIN
2. STRUCTURAL TIMBER FRAME BEAM(S)
3. TACKABLE WALL FINISH (WC–1), REFER TO INTERIOR ELEVATION(S) FOR SIZE & LOCATION
4. GWB EDGE OF ELEMENT BELOW TO BE PAINTED (PNT–2)

FINISH LEGEND

- SEALED CONCRETE
- CARPET
- VCT TILE (12"x24")
- WOOD DECK
- FLOOR DRAIN
- TRANSITION
- Z-1 MATERIAL KEY SEE SHEET A614

TRANSITION LEGEND

TR–4 = VCT TO CONCRETE

NOTE: REFER TO SPECIFICATIONS FOR TRANSITION PRODUCT TYPES

GENERAL NOTES

1. PROVIDE APPLIED STAINLESS STEEL CORNER GUARDS (SCHLUTER – ECK–K, 2" WIDE, LEGS) (MIN. 6'–0" TALL) AT ALL OUTSIDE CORNERS AS INDICATED ON FINISH PLAN BY ┐, REFER TO ELEVATIONS FOR MORE INFORMATION.
2. PROVIDE INTEGRAL STAINLESS STEEL CORNER GUARDS (SCHLUTER – ECK–E, SIZE TO BE DETERMINED BY TILE THICKNESS) (MIN. 6'–0" TALL) AT ALL OUTSIDE CORNERS WHERE WALL TILE IS TO BE INSTALLED, REFER TO INTERIOR ELEVATIONS FOR HTS. & MORE INFORMATION.
3. SEE FINISH SCHEDULE SHEET A614 FOR MATERIAL KEY

PROJECT KEY PLAN

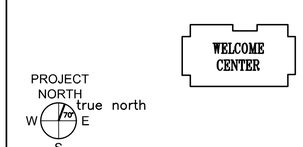

AECOM
1 FEDERAL STREET, 8TH FLOOR
BOSTON, MA 02110
617.723.1700
www.aecom.com

STATE OF MAINE
DEPARTMENT OF TRANSPORTATION

	DATE

FED P/N NO: NA
WIN NO: 017163.02 & 017163.03

LICENSED ARCHITECT KATYA MICHELLE WENGLER No. 5292 STATE OF MAINE

SIGNATURE

ARCH. LIN. NUMBER ARC5292

DATE JANUARY 17, 2022

PROJECT	INFORMATION
PROGRAM	–
PROJECT MANAGER	–
DESIGNER	AECOM
CONSULTANT	–
PROJECT RESIDENT	–
CONTRACTOR	–
PROJECT COMPLETION DATE	–

MAINE DEPARTMENT OF TRANSPORTATION
ACADIA GATEWAY FACILITY
INTERMODAL AND WELCOME CENTER

MEZZANINE FINISH FLOOR PLAN

SHEET NUMBER
A613

\\na.aecomnet.com\lfs\AMER\Boston-USBOS01\DCS\Projects\TRN\60653001_MaineDOT_Acadia_Gateway\900_CAD_GIS\910_CAD\Sheet\A613.dwg Jan 17, 2022 - 3:26pm

FINISH SCHEDULE

KEY	MATERIAL	LOCATION	MANUFACTURE	FINISH / PRODUCT TYPE	SIZE	COLOR	REMARKS
ACT-1	ACOUSTIC CEILING TILE	AS SHOWN ON RCP	ARMSTRONG	ULTIMA, BEVELED TEGULAR – 1912	24" x 24"	WHITE	9/16" SUPRAFINE GRID COLOR: WHITE
CPT-1	CARPET TILES (MODULAR)	1ST FLR. OFFICES	INTERFACE FLOR	CUBIC 1380102500	20" x 20"	CONSTRUCTION #6395	1/4 TURN INSTALLATION
FL-1	STAINED / POLISHED CONCRETE	1ST FLR. OPEN AREAS	TBD	STAINED / POLISHED CONCRETE	N/A	SEE NOTE #9	ACID ETCHED "MAP OF ACADIA" – SEE NOTE #9
FL-2	SEALED CONCRETE	BASEMENT & BACK-OF-HOUSE AREAS	H&C CONCRETE	CONCRETE SEALER	N/A	CLEAR	--
PL-3	PLASTIC LAMINATE	INTERIOR OF 1ST FLR. MILLWORK & ALL TOE-KICKS @ LOWER CABINETS	WILSONART LAMINATE	MATTE FINISH	N/A	BLACK #595-60	REFER TO MILLWORK DETAILS FOR MORE INFORMATION
PL-4	PLASTIC LAMINATE	TOILET ROOM(S) UNDER-COUNTER PANEL	FORMICA	MATTE FINISH	N/A	SAIL WHITE #463-58	REFER TO MILLWORK DETAILS FOR MORE INFORMATION
PL-5	PLASTIC LAMINATE	LOWER PANEL, COMPUTER COUNTER	FORMICA	GLOSS FINISH	N/A	FOSSIL #5349-90	REFER TO MILLWORK DETAILS FOR MORE INFORMATION
PT-1	PAINT	WALLS	BENJAMIN MOORE	EGGSHELL	N/A	ACADIA WHITE AC-41	--
PT-2	PAINT	WALL ACCENT	BENJAMIN MOORE	EGGSHELL	N/A	GEORGIAN GREEN HC-115	--
PT-3	PAINT	GWB CEILINGS	BENJAMIN MOORE	FLAT (READY-MIXED)	N/A	DECORATORS WHITE PM-3	--
PT-4	PAINT	BACK-OF-HOUSE EXPOSED STRUCTURE	BENJAMIN MOORE	FLAT	N/A	GALVESTON GRAY AC-27	--
PT-5	PAINT	EXPOSED PIPING & DUCTWORK (MAIN SPACE)	BENJAMIN MOORE	PEARL (READY-MIXED)	N/A	BLACK PM-9	--
PT-6	PAINT	WALL ACCENT	BENJAMIN MOORE	EGGSHELL	N/A	SMOKE 2122-40	--
QTZ-1	QUARTZ	RECEPTION DESK, RETAIL COUNTER & COMPUTER STATIONS	ECO by COSENTINO	ECO QUARTZ	N/A	TERRA	REFER TO MILLWORK DETAILS FOR MORE INFORMATION
SCRC-1	SOLID COLOR REINFORCED COMPOSITE	BATHROOM TOILET PARTITIONS	BOBRICK	SIERRA SERIES 1090	3/4" THICK	SC01 GOLDEN KHAKI	REFER TO ENLARGED PLANS & ELEVATIONS FOR MORE INFO.
SS-3	SOLID SURFACE	1ST FLR. BATHROOM COUNTERTOPS	CORIAN	N/A	1/2" THICK	FOSSIL	REFER TO MILLWORK DETAILS FOR MORE INFORMATION
SS-4	SOLID SURFACE (RESIN)	1ST FLR. MILLWORK ACCENT	3 FORM	CHROMA – C3 COLOR MATTE FINISH	1/2" THICK	WHITEOUT	REFER TO MILLWORK DETAILS FOR MORE INFORMATION
SS-5	SOLID SURFACE (RESIN)	1ST FLR. MILLWORK ACCENT, RECEPTION BACK WALL	3 FORM	VARIA ECORESIN – HIGH RES IMAGERY, SANDSTONE FINISH (STAND-OFF INSTALLATION)	1/2" THICK	CUSTOM "ACADIA COASTLINE" IMAGE	REFER TO MILLWORK DETAILS FOR MORE INFORMATION, IMAGE T.B.D.
STVR	STONE VENEER WALL BASE	THROUGHOUT MAIN AREA/SPACES		--	--	--	--
T-1	PORCELAIN TILE	1ST BATHROOMS	CROSSVILLE	BLUESTONE (UPS FINISH)	6" x 24"	PENNSYLVANIA BLUE AV203	REFER TO FINISH PLAN FOR PATTERN & DIRECTION
T-3	PORCELAIN TILE	1ST FLR. JANITOR	CROSSVILLE	COLOR BLOX EC	6" x 6"	I SEE THE MOON E1117	--
TB-1	PORCELAIN TILE BASE	THROUGHOUT MAIN AREAS/SPACES	CROSSVILLE	BLUESTONE (UPS FINISH)	4" x 12" BULLNOSE	PENNSYLVANIA BLUE AV203	--
WDAT	ACOUSTIC WOOD-LOOKS PANEL	THROUGHOUT MAIN AREA/SPACES	--	--	--	--	--
WDC-1	WOOD SLAT CEILING	AS SHOWN ON RCP	ARMSTRONG	WOODWORKS – LINEAR PLANKS	6" MODULE	TBD	--
WDTG	WOOD TONGUE-AND-GROOVE PLANK WALL	THROUGHOUT MAIN AREA/SPACES	--	--	--	--	SEE PARTITION TYPE M
WM-1	WALK-OFF MAT	ENTRY AREAS, AS SHOWN ON THE FINISH PLAN	MATS INC.	SUPREME NOP – MODULAR TILES	20" x 20"	TWEED BROWN	--
WT-4	PORCELAIN WALL TILE (FIELD)	1ST FLR. BATHROOMS	CROSSVILLE	RETRO ACTIVE	4" x 12"	EMPRESS WHITE #A215/ .10412 UPS	TILES TO BE INSTALLED AS RUNNING BOND/SUBWAY
WT-5	PORCELAIN WALL TILE (ACCENT)	1ST FLR. BATHROOMS	CROSSVILLE	RETRO ACTIVE	4" x 12"	MAPLE SUGAR #C360/ .10412 UPS	TILES TO BE INSTALLED AS RUNNING BOND/SUBWAY
WT-6	PORCELAIN WALL TILE (ACCENT)	1ST FLR. BATHROOMS	CROSSVILLE	COLOR BLOX TOO	4" x 12"	CELERY STALK #A1173 .10612 UPS	TILES TO BE INSTALLED AS RUNNING BOND/SUBWAY
VB-1	VINYL WALL BASE	THROUGHOUT, U.N.O. (REFER TO FINISH PLAN)	JOHNSONITE	STRAIGHT & COVE	1/8" THK. x 4" TALL	BLACK #40	STRAIGHT BASE @ CARPET & COVE BASE AT ALL OTHER LOCATIONS

GENERAL FINISH NOTES

1. ALL GYPSUM WALLS TO BE PT-1 U.N.O.

2. ALL TOILET AND SHOWER ROOM WALLS TO BE PAINTED ABOVE TILE.

3. ALL GYPSUM WALL BOARD (GWB) CEILINGS AND SOFFITS TO BE PT-3 U.N.O.

4. ALL WALL BASE TO BE VB-1 U.N.O.

5. ALL DOORS AND DOOR FRAMES TO BE PT-1, TO MATCH WALL U.N.O.

6. PAINT EXPOSED HVAC DUCTWORK AND FIRE PROTECTION PIPING PT-5, U.N.O.

7. ALL BACK-OF-HOUSE EXPOSED STRUCTURE, DECKING, CONDUITS, SPRINKLER PIPING, HVAC DUCTS, SUPPORTS, ETC., TO BE PT-4 U.N.O.

8. GROUT COLORS FOR FLOOR TILES TO BE THE FOLLOWING:
T-1, LATICRETE – TBD
T-2, LATICRETE – TBD
T-3, LATICRETE – TBD
T-6, LATICRETE – TBD

AECOM
1 FEDERAL STREET, 8TH FLOOR
BOSTON, MA 02110
617.723.1700
www.aecom.com

STATE OF MAINE
DEPARTMENT OF TRANSPORTATION

DATE

FED PIN NO: NA

WIN NO: 017163.02 & 017163.03

LICENSED ARCHITECT KARLA MICHELLE WENGLER No. 5292 STATE OF MAINE

SIGNATURE

ARCH. LIN. NUMBER ARC5292

DATE JANUARY 17, 2022

PROJECT	INFORMATION
PROGRAM	–
PROJECT MANAGER	–
DESIGNER	AECOM
CONSULTANT	–
PROJECT RESIDENT	–
CONTRACTOR	–
PROJECT COMPLETION DATE	–

MAINE DEPARTMENT OF TRANSPORTATION
ACADIA GATEWAY FACILITY
INTERMODAL AND WELCOME CENTER

FINISH SCHEDULE

SHEET NUMBER
A614

\\na.aecomnet.com\lfs\AMER\Boston-USBOS01\DCS\Projects\TRN\60653001_MaineDOT_Acadia_Gateway\900_CAD_GIS\910_CAD\Sheet\A614.dwg Jan 17, 2022 - 3:26pm

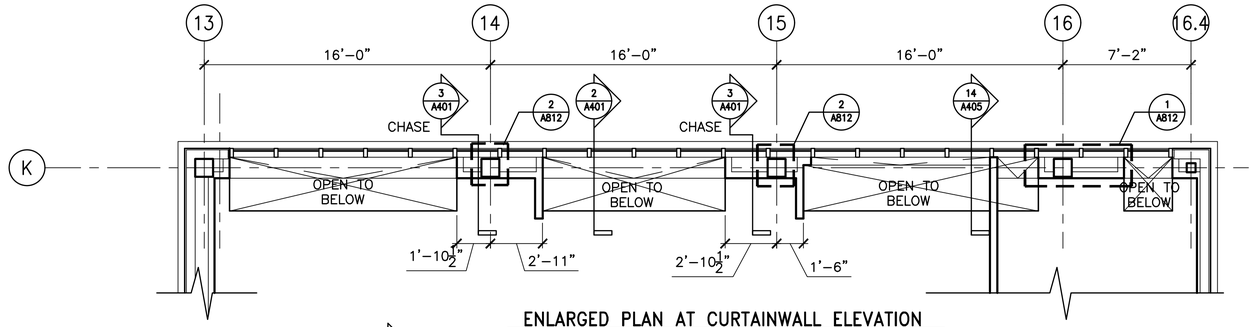

ENLARGED PLAN AT CURTAINWALL ELEVATION

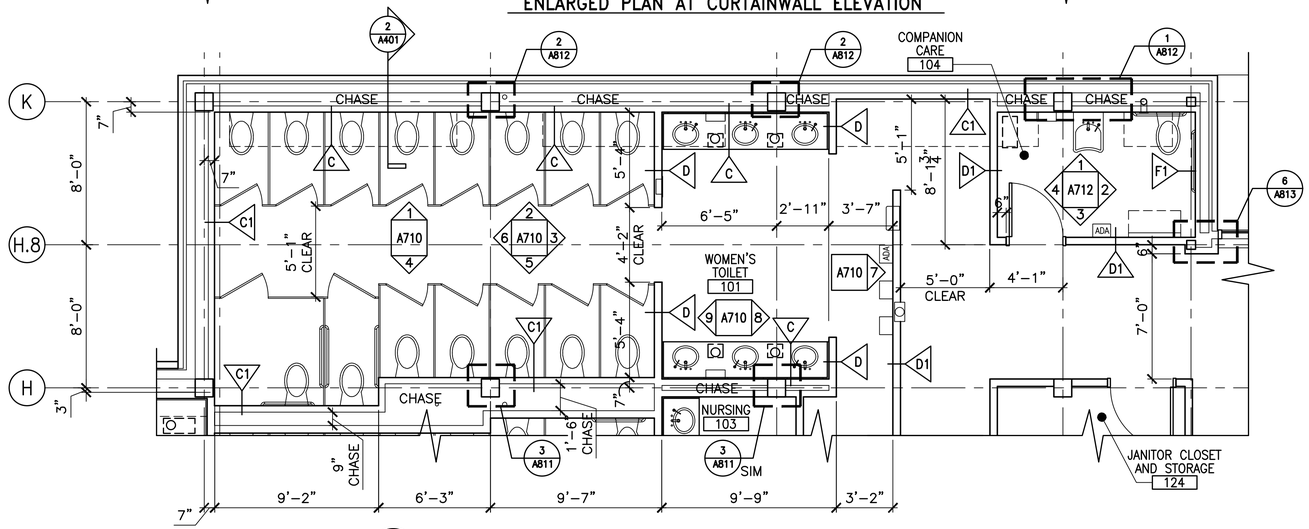

1 ENLARGED WOMEN'S TOILET ROOM (101) PLAN
1/4"=1'-0"

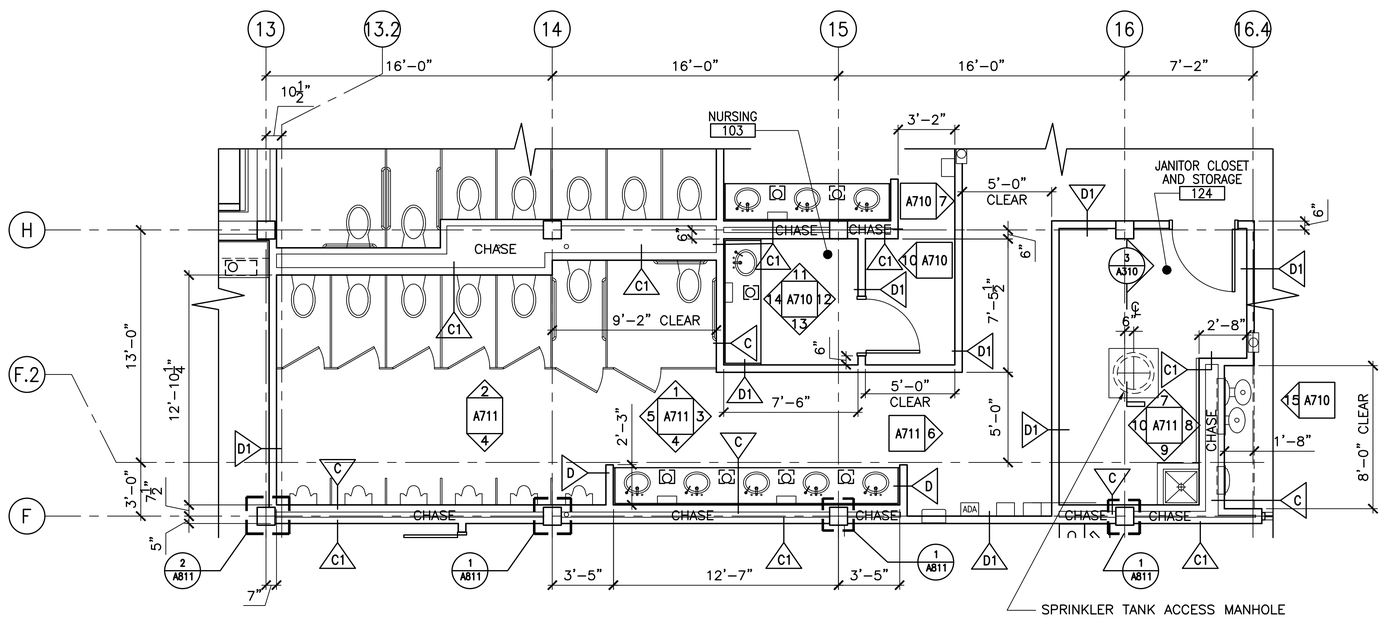

3 ENLARGED MEN'S TOILET ROOM (102) PLAN
1/4"=1'-0"

KEY NOTES

1. SPRINKLER TANK ACCESS MANHOLE
2. MOP SINK W/ FAUCET – SEE ELEVATIONS
3. WALL MOUNTED ELECTRIC HAND DRYER(S) – SEE ELEVATIONS

GENERAL NOTES

1. REFER TO A004 & A005 FOR TYPICAL MOUNTING HEIGHTS AND CLEARANCES REQUIRED.
2. REFER TO A830 & A831 FOR ALL PARTITION TYPES.
3. ALL CHASES TO BE DIMENSIONED. COORDINATE WITH PIPING / RECESSED FIXTURE / HANGER REQUIRED MINIMUM CLEARANCES.

AECOM
1 FEDERAL STREET, 8TH FLOOR
BOSTON, MA 02110
617.723.1700
www.aecom.com

STATE OF MAINE
DEPARTMENT OF TRANSPORTATION

DATE

FED PIN NO: NA

WIN NO: 017163.02 & 017163.03

LICENSED ARCHITECT KATYA MICHELLE WENGLER No. 5292 STATE OF MAINE

SIGNATURE

ARCH. LIN. NUMBER ARC5292

DATE JANUARY 17, 2022

PROJECT INFORMATION	
PROGRAM	–
PROJECT MANAGER	–
DESIGNER	AECOM
CONSULTANT	–
PROJECT RESIDENT	–
CONTRACTOR	–
PROJECT COMPLETION DATE	–

MAINE DEPARTMENT OF TRANSPORTATION
ACADIA GATEWAY FACILITY
INTERMODAL AND WELCOME CENTER

ENLARGED PLANS I

SHEET NUMBER
A701

\\na.aecomnet.com\fs\AMER\Boston-USBOS01\DCS\Projects\TRN\60653001_MaineDOT_Acadia_Gateway\900_CAD_GIS\910_CAD\Sheet\A701.dwg Jan 17, 2022 - 3:27pm

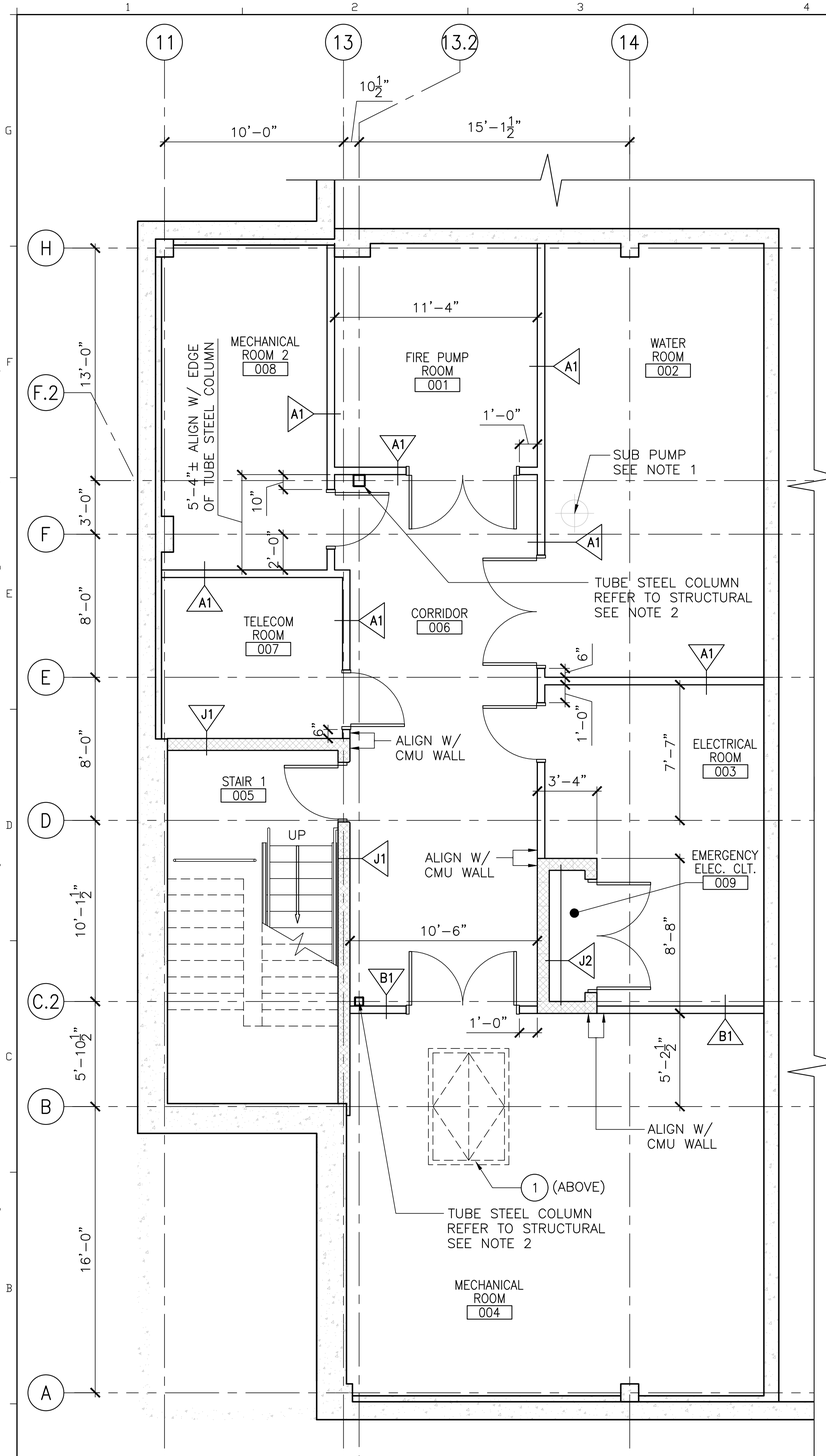

2 ENLARGED BASEMENT PLAN
1/4"=1'-0"

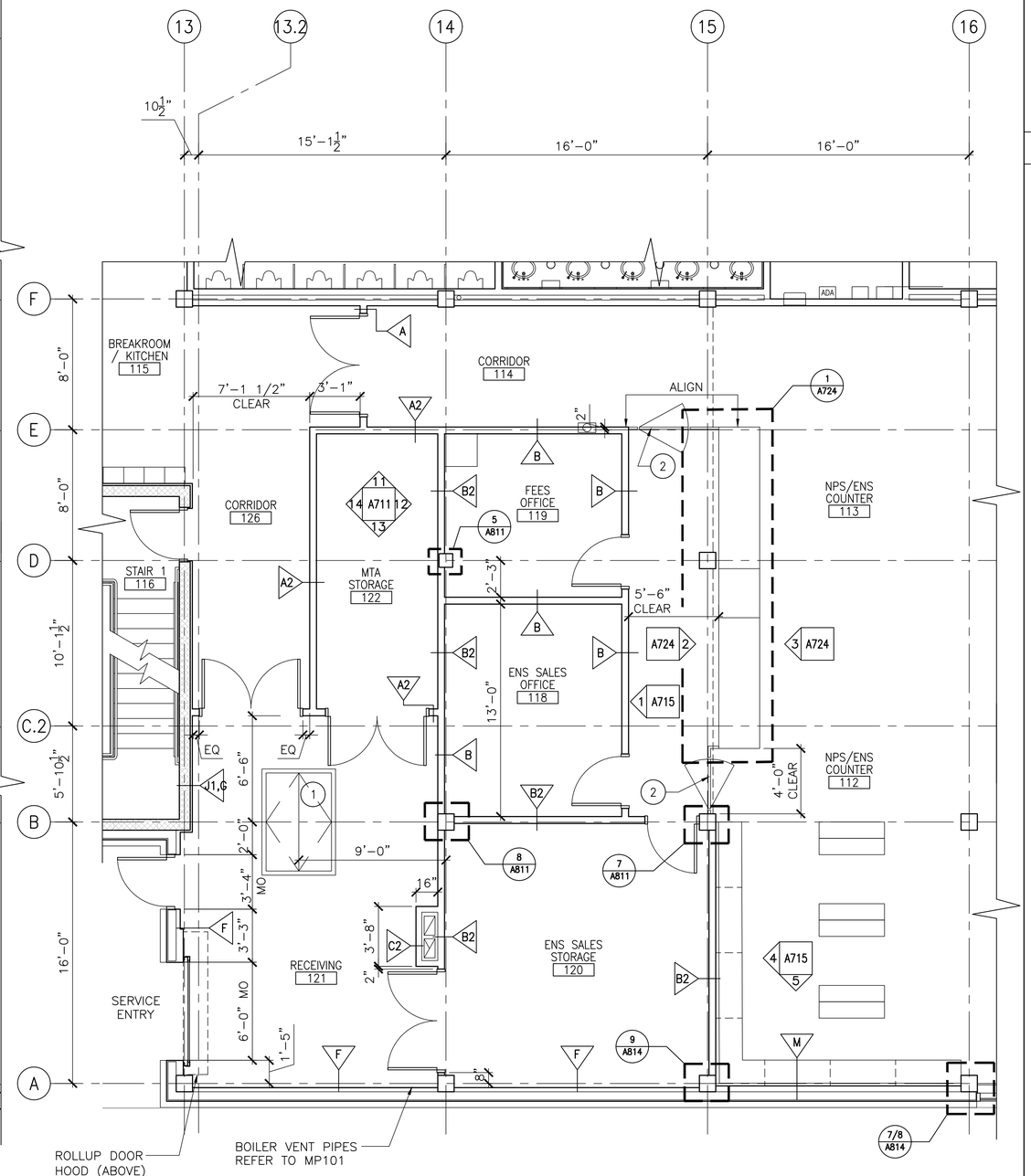

1 ENLARGED FIRST FLOOR OFFICE PLAN
1/4"=1'-0"

KEY NOTES

1. MECHANICAL ROOM ACCESS FLOOR HATCH, SEE DETAILS 1,2/A806
2. INDOOR COUNTER SWING GATE AND PANELS; PRODUCT / MODEL TBD

GENERAL NOTES

1. COORDINATE DRAIN AND SUMP PUMP LOCATIONS WITH PLUMBING.
2. THE COLUMN SHALL BE WRAPPED W/ ONE HOUR FIRE PROTECTION, FINISH FLOOR TO DECK (UL NO. X526)
3. REFER TO A005 FOR TYPICAL MOUNTING HEIGHTS AND CLEARANCES REQUIRED.
4. REFER TO A830 & A831 FOR ALL PARTITION TYPES.

AECOM
1 FEDERAL STREET, 8TH FLOOR
BOSTON, MA 02110
617.723.1700
www.aecom.com

STATE OF MAINE
DEPARTMENT OF TRANSPORTATION

DATE	
FED PIN NO:	NA
WIN NO:	017163.02 & 017163.03

LICENSED ARCHITECT KAYLA MICHELLE WENGER No. 5292 STATE OF MAINE

SIGNATURE	Kayla Wenger
ARCH. LIN. NUMBER	ARC5292
DATE	JANUARY 17, 2022

PROJECT INFORMATION	
PROGRAM	–
PROJECT MANAGER	–
DESIGNER	AECOM
CONSULTANT	–
PROJECT RESIDENT	–
CONTRACTOR	–
PROJECT COMPLETION DATE	–

MAINE DEPARTMENT OF TRANSPORTATION
ACADIA GATEWAY FACILITY
INTERMODAL AND WELCOME CENTER

ENLARGED PLANS II

SHEET NUMBER
A702

\\na.aecomnet.com\lfs\AMER\Boston-USBOS01\DCS\Projects\TRN\60653001_MaineDOT_Acadia_Gateway\900_CAD_GIS\910_CAD\Sheet\A702.dwg Mar 08, 2022 - 4:08pm

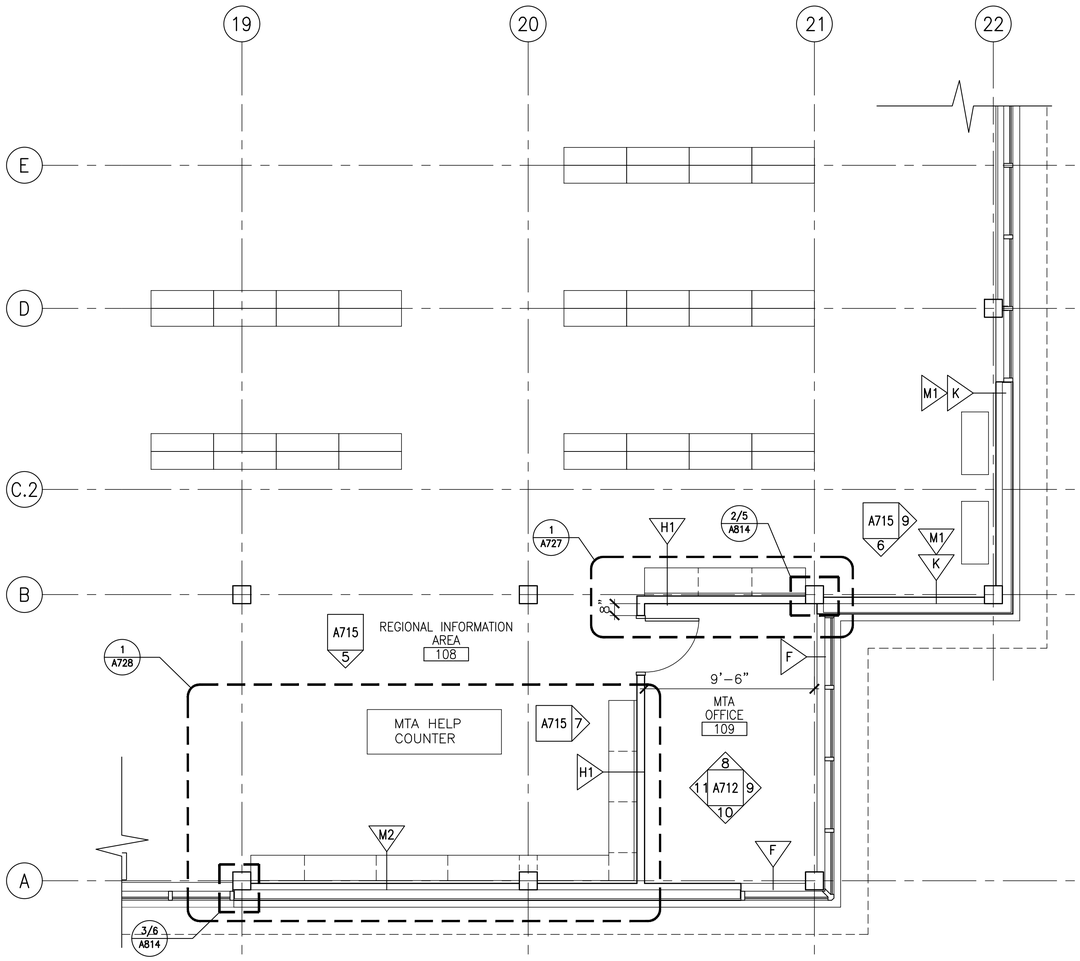

2 ENLARGED REGIONAL INFO AREA AND OFFICE PLAN
1/4"=1'-0"
0 2' 4'

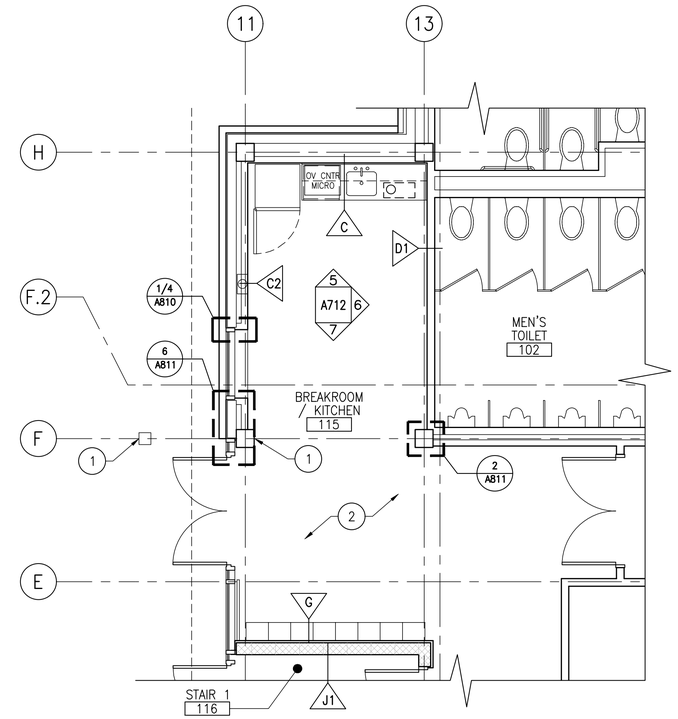

1 ENLARGED BREAKROOM / KITCHEN PLAN
1/4"=1'-0"
0 2' 4'

GENERAL NOTES

1. REFER TO A005 FOR TYPICAL MOUNTING HEIGHTS AND CLEARANCES REQUIRED.
2. REFER TO A830 AND A831 FOR ALL PARTITION TYPES.
3. PITCH TO FLOOR DRAINS. MAXIMUM PITCH IS 1" LEAVING 1" OF CONCRETE MINIMUM ON 3/4" PLYWOOD.
4. ALL CHASES TO BE DIMENSIONED. COORDINATE WITH PIPING / RECESSED FIXTURE / HANGER REQUIRED MINIMUM CLEARANCES.

KEY NOTES

1. PUSH BUTTON AUTOMATIC DOOR OPENER
2. FURNITURE TO REMAIN CLEAR OF MEANS OF EGRESS,

AECOM
1 FEDERAL STREET, 8TH FLOOR
BOSTON, MA 02110
617.723.1700
www.aecom.com

STATE OF MAINE
DEPARTMENT OF TRANSPORTATION

	DATE

FED PIN NO: NA
WIN NO: 017163.02 & 017163.03

LICENSED ARCHITECT KARYLA MICHELLE WENGLER No. 5292 STATE OF MAINE

SIGNATURE
ARCH. LIN. NUMBER ARC5292
DATE JANUARY 17, 2022

PROJECT INFORMATION	
PROGRAM	–
PROJECT MANAGER	–
DESIGNER	AECOM
CONSULTANT	–
PROJECT RESIDENT	–
CONTRACTOR	–
PROJECT COMPLETION DATE	–

MAINE DEPARTMENT OF TRANSPORTATION
ACADIA GATEWAY FACILITY
INTERMODAL AND WELCOME CENTER

ENLARGED PLANS III

SHEET NUMBER
A703

\\na.aecomnet.com\lfs\AMER\Boston-USBOS01\DCS\Projects\TRN\60653001_MaineDOT_Acadia_Gateway\900_CAD_GIS\910_CAD\Sheet\A703.dwg Aug 23, 2022 - 9:41am

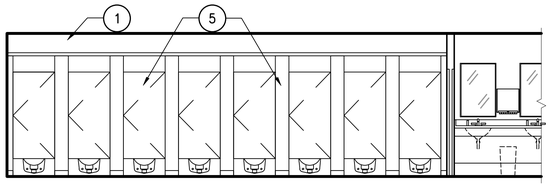

1 WOMEN'S TOILET (101)
1/4"=1'-0"

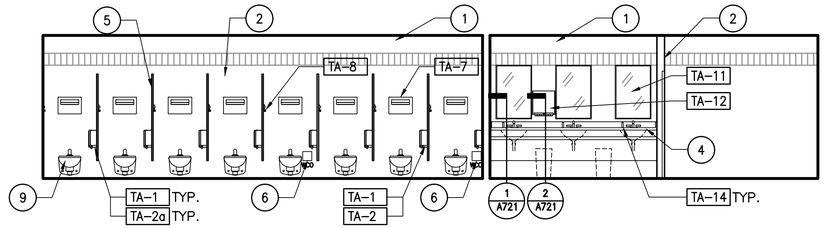

2 WOMEN'S TOILET (101)
1/4"=1'-0"

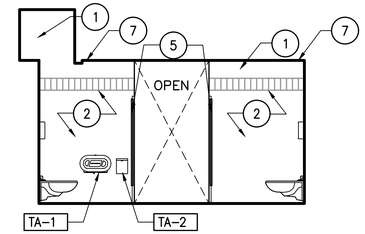

3 WOMEN'S TOILET (101)
1/4"=1'-0"

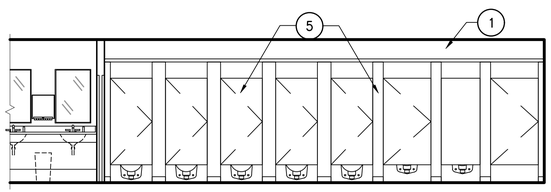

4 WOMEN'S TOILET (101)
1/4"=1'-0"

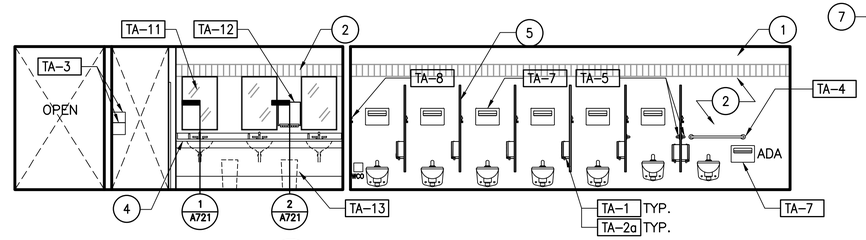

5 WOMEN'S TOILET (101)
1/4"=1'-0"

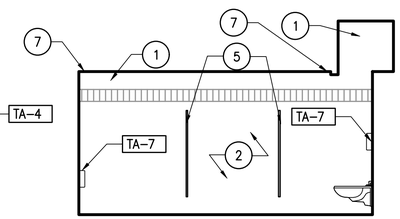

6 WOMEN'S TOILET (101)
1/4"=1'-0"

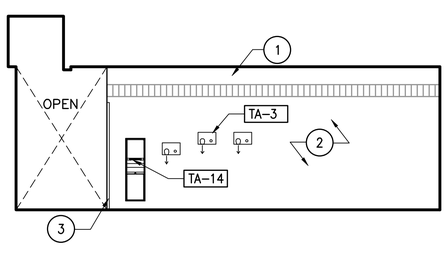

7 WOMEN'S TOILET (101)
1/4"=1'-0"

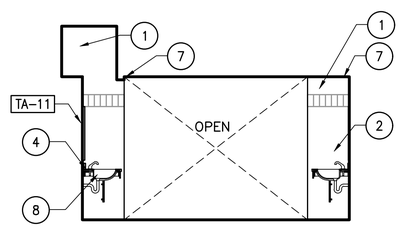

8 WOMEN'S TOILET (101)
1/4"=1'-0"

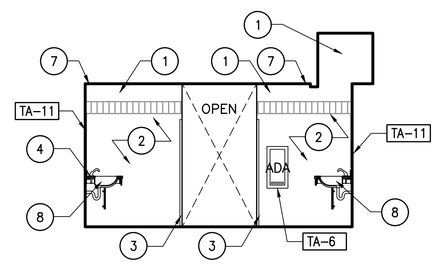

9 WOMEN'S TOILET (101)
1/4"=1'-0"

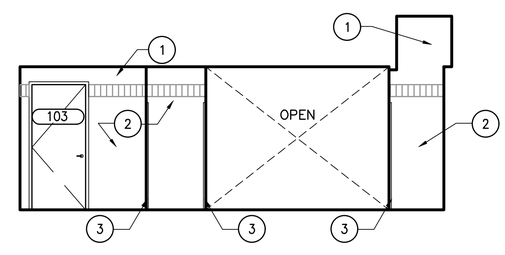

10 WOMEN'S TOILET (101)
1/4"=1'-0"

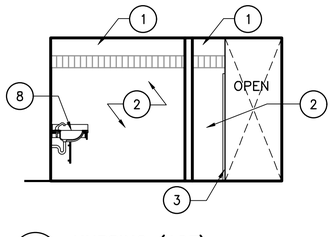

11 NURSING (103)
1/4"=1'-0"

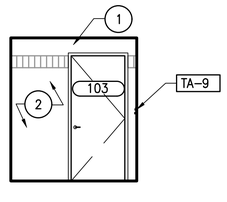

12 NURSING (103)
1/4"=1'-0"

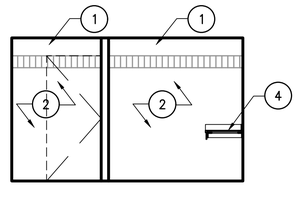

13 NURSING (103)
1/4"=1'-0"

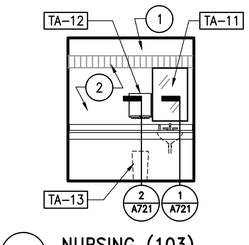

14 NURSING (103)
1/4"=1'-0"

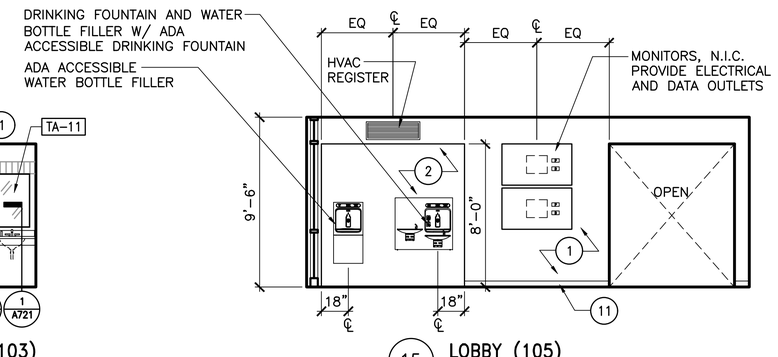

15 LOBBY (105)
1/4"=1'-0"

TOILET ROOM NOTES

1. ALL METAL STUDS TO BE GALVANIZED UNLESS OTHERWISE NOTED.
2. SEE SPECIFIED PAINT SCHEDULE.
3. REFER TO SPECIFICATIONS FOR ACCESSORIES.
4. ALL WALL TILE WT-4 UON.
5. COAT HOOKS TO BE INSTALLED IN EACH TOILET STALL ON PARTITION WALL.
6. REFER TO A005 FOR TYPICAL MOUNTING HEIGHTS AND CLEARANCES REQUIRED.

KEY NOTES

1. PAINTED GWB
2. CERAMIC TILE
3. CORNER GUARD(S)
4. SOLID SURFACE COUNTERTOP
5. TOILET PARTITION
6. WALL CLEANOUT (WCO)
7. SLOT LIGHT
8. LAVATORY
9. TOILET
11. BASE – SEE ROOM FINISH SCHEDULE

TOILET ACCESSORY TABLE

FIXTURE NUMBER	DESCRIPTION
TA1	Toilet Tissue Dispenser
TA2	Napkin Disposal, Surface-Mounted
TA2a	Sanitary Napkin Disposal, Partition-Mounted
TA3	Electric Hand Dryer
TA4	36" Grab Bar
TA5	42" Grab Bar
TA6	Sanitary Napkin Vending
TA7	Toilet Seat Cover Dispenser
TA8	Counter Mounted Soap Dispenser
TA9	Coat / Robe Hook
TA10	Shelf / Mop Holder
TA11	Mirror(s)
TA12	Paper Towel Dispenser
TA13	Undercounter Waste Receptacle
TA14	Wall Mounted Waste Receptacle And Paper Towel Dispenser

AECOM
1 FEDERAL STREET, 8TH FLOOR
BOSTON, MA 02110
617.723.1700
www.aecom.com

STATE OF MAINE
DEPARTMENT OF TRANSPORTATION

DATE

FED PIN NO: NA

WIN NO: 017163.02 & 017163.03

LICENSED ARCHITECT KARLA MICHELLE WENGLER No. 5292 STATE OF MAINE

SIGNATURE

ARCH. LIN. NUMBER ARC5292

DATE JANUARY 17, 2022

PROJECT INFORMATION

PROGRAM	–
PROJECT MANAGER	–
DESIGNER	AECOM
CONSULTANT	–
PROJECT RESIDENT	–
CONTRACTOR	–
PROJECT COMPLETION DATE	–

MAINE DEPARTMENT OF TRANSPORTATION
ACADIA GATEWAY FACILITY
INTERMODAL AND WELCOME CENTER

ROOM ELEVATIONS I

SHEET NUMBER
A710

\\na.aecomnet.com\Ifs\AMER\Boston-USBOS01\DCS\Projects\TRN\60653001_MaineDOT_Acadia_Gateway\900_CAD_GIS\910_CAD\Sheet\A710.dwg Jan 17, 2022 - 3:28pm

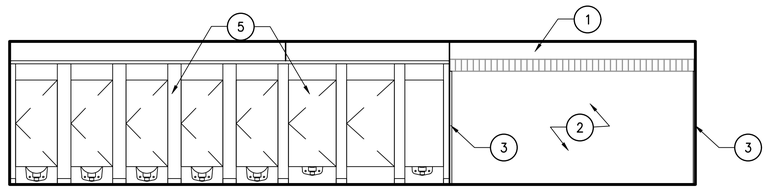

1 MEN'S TOILET (102)
1/4"=1'-0"

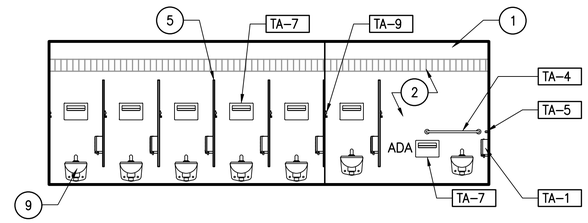

2 MEN'S TOILET (102)
1/4"=1'-0"

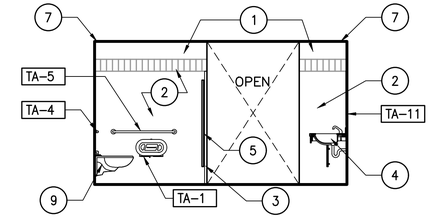

3 MEN'S TOILET (102)
1/4"=1'-0"

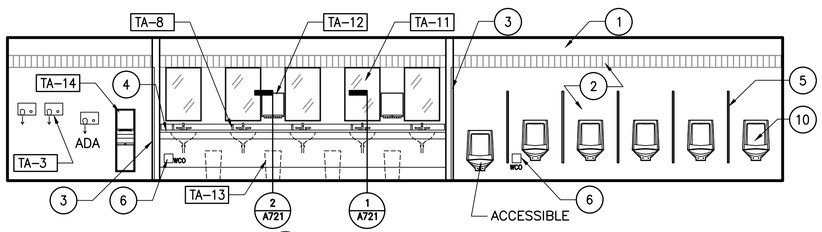

4 MEN'S TOILET (102)
1/4"=1'-0"

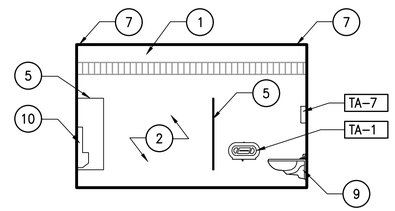

5 MEN'S TOILET (102)
1/4"=1'-0"

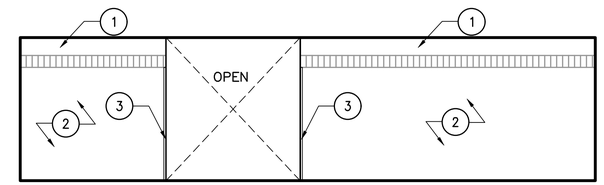

6 MEN'S TOILET (102)
1/4"=1'-0"

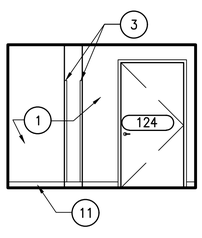

7 JANITOR CLOSET AND STORAGE (124)
1/4"=1'-0"

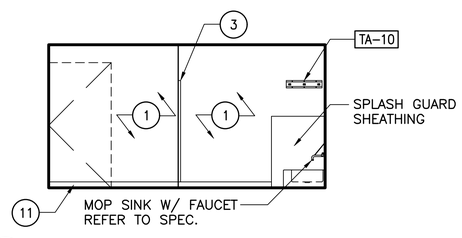

8 JANITOR CLOSET AND STORAGE (124)
1/4"=1'-0"

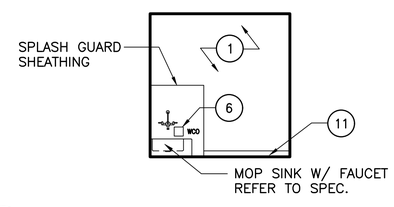

9 JANITOR CLOSET AND STORAGE (124)
1/4"=1'-0"

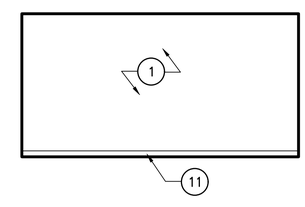

10 JANITOR CLOSET AND STORAGE (124)
1/4"=1'-0"

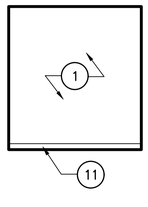

11 STORAGE (122)
1/4"=1'-0"

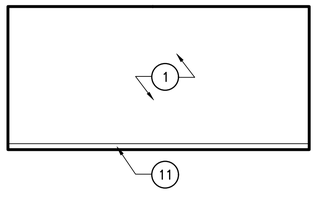

12 STORAGE (122)
1/4"=1'-0"

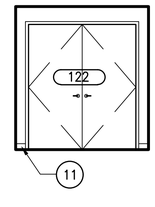

13 STORAGE (122)
1/4"=1'-0"

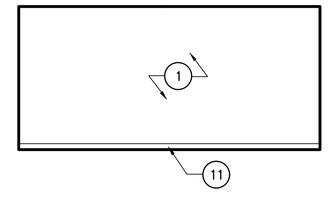

14 STORAGE (122)
1/4"=1'-0"

TOILET ROOM NOTES

1. ALL METAL STUDS TO BE GALVANIZED UNLESS OTHERWISE NOTED.
2. SEE SPECIFIED PAINT SCHEDULE.
3. REFER TO SPECIFICATIONS FOR ACCESSORIES.
4. ALL WALL TILE WT-4 UON.
5. COAT HOOKS TO BE INSTALLED IN EACH TOILET STALL ON PARTITION WALL.
6. REFER TO A005 FOR TYPICAL MOUNTING HEIGHTS AND CLEARANCES REQUIRED.

KEY NOTES

1. PAINTED GWB
2. CERAMIC TILE
3. CORNER GUARD(S)
4. SOLID SURFACE COUNTERTOP
5. TOILET PARTITION
6. WALL CLEANOUT (WCO)
7. SLOT LIGHT
8. LAVATORY
9. TOILET
10. URINAL
11. BASE – SEE ROOM FINISH SCHEDULE

TOILET ACCESSORY TABLE

FIXTURE NUMBER	DESCRIPTION
TA1	Toilet Tissue Dispenser
TA2	Napkin Disposal, Surface–Mounted
TA2a	Sanitary Napkin Disposal, Partition–Mounted
TA3	Electric Hand Dryer
TA4	36" Grab Bar
TA5	42" Grab Bar
TA6	Sanitary Napkin Vending
TA7	Toilet Seat Cover Dispenser
TA8	Counter Mounted Soap Dispenser
TA9	Coat / Robe Hook
TA10	Shelf / Mop Holder
TA11	Mirror(s)
TA12	Paper Towel Dispenser
TA13	Undercounter Waste Receptacle
TA14	Wall Mounted Waste Receptacle And Paper Towel Dispenser

AECOM
1 FEDERAL STREET, 8TH FLOOR
BOSTON, MA 02110
617.723.1700
www.aecom.com

STATE OF MAINE
DEPARTMENT OF TRANSPORTATION

DATE

FED PIN NO: NA

WIN NO: 017163.02 & 017163.03

LICENSED ARCHITECT KAYLA MICHELLE WENGLER No. 5292 STATE OF MAINE

SIGNATURE

ARCH. LIN. NUMBER ARC5292

DATE JANUARY 17, 2022

PROJECT INFORMATION	
PROGRAM	–
PROJECT MANAGER	–
DESIGNER	AECOM
CONSULTANT	–
PROJECT RESIDENT	–
CONTRACTOR	–
PROJECT COMPLETION DATE	–

MAINE DEPARTMENT OF TRANSPORTATION
ACADIA GATEWAY FACILITY
INTERMODAL AND WELCOME CENTER

ROOM ELEVATIONS II

SHEET NUMBER
A711

\\na.aecomnet.com\lfs\AMER\Boston-USBOS01\DCS\Projects\TRN\60653001_MaineDOT_Acadia_Gateway\900_CAD_GIS\910_CAD\Sheet\A711.dwg Jan 17, 2022 - 3:29pm

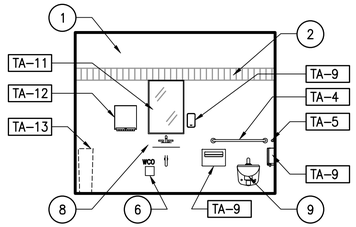

1 COMPANION CARE (104)
1/4"=1'-0"

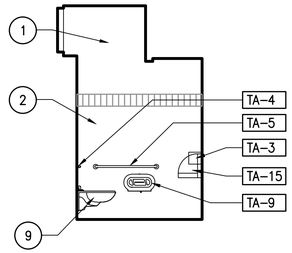

2 COMPANION CARE (104)
1/4"=1'-0"

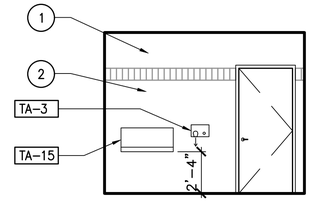

3 COMPANION CARE (104)
1/4"=1'-0"

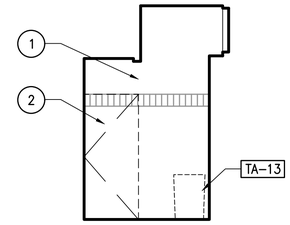

4 COMPANION CARE (104)
1/4"=1'-0"

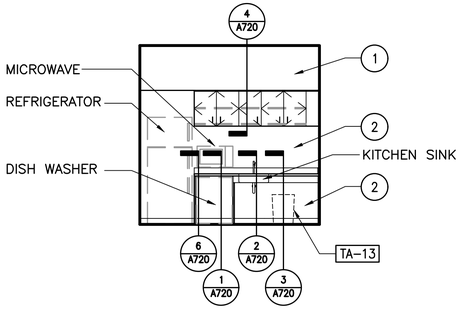

5 BREAKROOM / KITCHEN (115)
1/4"=1'-0"

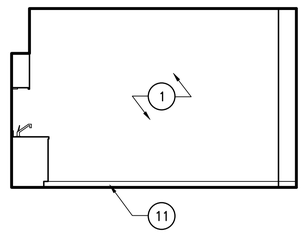

6 BREAKROOM / KITCHEN (115)
1/4"=1'-0"

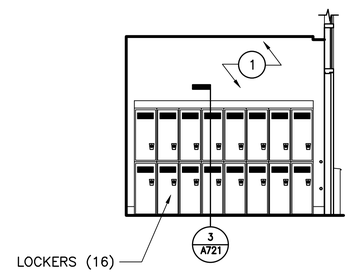

7 BREAKROOM / KITCHEN (115)
1/4"=1'-0"

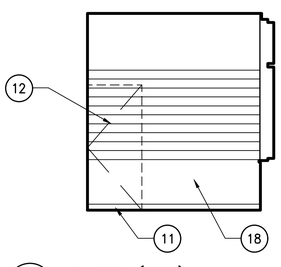

8 OFFICE (109)
1/4"=1'-0"

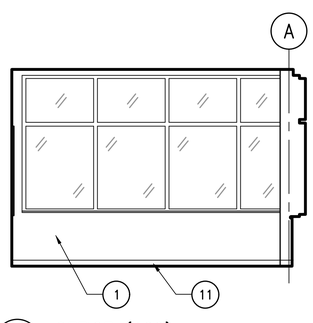

9 OFFICE (109)
1/4"=1'-0"

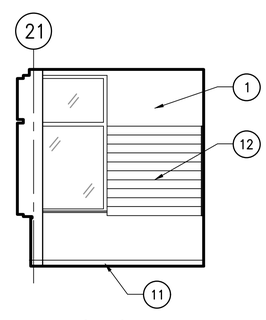

10 OFFICE (109)
1/4"=1'-0"

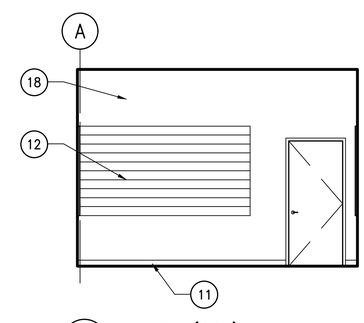

11 OFFICE (109)
1/4"=1'-0"

TOILET ROOM NOTES

1. ALL METAL STUDS TO BE GALVANIZED UNLESS OTHERWISE NOTED.
2. SEE SPECIFIED PAINT SCHEDULE.
3. REFER TO SPECIFICATIONS FOR ACCESSORIES.
4. ALL WALL TILE WT-4 UON.
5. REFER TO SHEET A-004 FOR MOUNTING TYPICAL HEIGHTS.
6. REFER TO A004 & A005 FOR TYPICAL MOUNTING HEIGHTS AND CLEARANCES REQUIRED.

TOILET KEY NOTES

1. PAINTED GWB
2. CERAMIC TILE
3. CORNER GUARD(S)
4. SOLID SURFACE COUNTERTOP
5. TOILET PARTITION
6. WALL CLEANOUT (WCO)
7. WALL MOUNTED LIGHT
8. LAVATORY
9. TOILET
11. BASE – SEE ROOM FINISH SCHEDULE
12. WOOD SLAT WALL
18. TONGUE & GROOVE PLANK SYSTEM, REFER TO PARTITION TYPES

TOILET ACCESSORY TABLE

FIXTURE NUMBER	DESCRIPTION
TA1	Toilet Tissue Dispenser
TA2	Napkin Disposal, Surface-Mounted
TA2a	Sanitary Napkin Disposal, Partition-Mounted
TA3	Electric Hand Dryer
TA4	36" Grab Bar
TA5	42" Grab Bar
TA6	Sanitary Napkin Vending
TA7	Toilet Seat Cover Dispenser
TA8	Counter Mounted Soap Dispenser
TA9	Coat / Robe Hook
TA10	Shelf / Mop Holder
TA11	Mirror(s)
TA12	Paper Towel Dispenser
TA13	Undercounter Waste Receptacle
TA14	Wall Mounted Waste Receptacle And Paper Towel Dispenser
TA15	Wall Mounted Diaper Changing Station; MFR and Model TBD

AECOM
1 FEDERAL STREET, 8TH FLOOR
BOSTON, MA 02110
617.723.1700
www.aecom.com

STATE OF MAINE
DEPARTMENT OF TRANSPORTATION

DATE

FED PIN NO: NA

WIN NO: 017163.02 & 017163.03

LICENSED ARCHITECT KAYLA MICHELLE WENGLER No. 5292 STATE OF MAINE

SIGNATURE

ARCH. LIN. NUMBER ARC5292

DATE JANUARY 17, 2022

PROJECT INFORMATION

PROGRAM	–
PROJECT MANAGER	–
DESIGNER	AECOM
CONSULTANT	–
PROJECT RESIDENT	–
CONTRACTOR	–
PROJECT COMPLETION DATE	–

MAINE DEPARTMENT OF TRANSPORTATION
ACADIA GATEWAY FACILITY
INTERMODAL AND WELCOME CENTER

ROOM ELEVATIONS III

SHEET NUMBER
A712

\\na.aecomnet.com\lfs\AMER\Boston-USBOS01\DCS\Projects\TRN\60653001_MaineDOT_Acadia_Gateway\900_CAD_GIS\910_CAD\Sheet\A712.dwg Jan 17, 2022 - 3:29pm

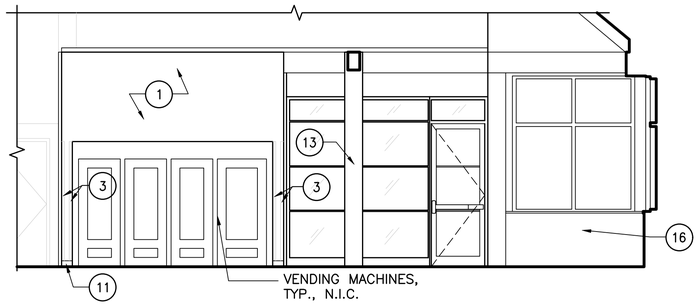

1 PASSANGER WAITING (106)
1/4"=1'-0"

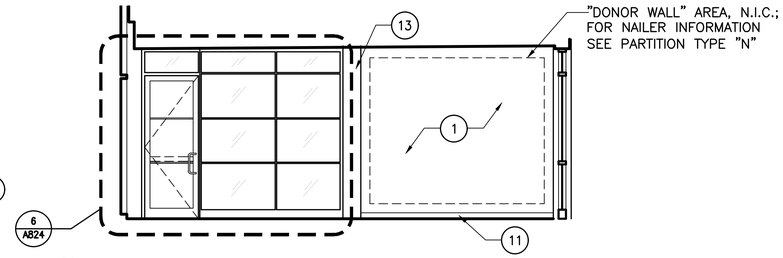

2 LOBBY/VESTIBULE (105)
1/4"=1'-0"

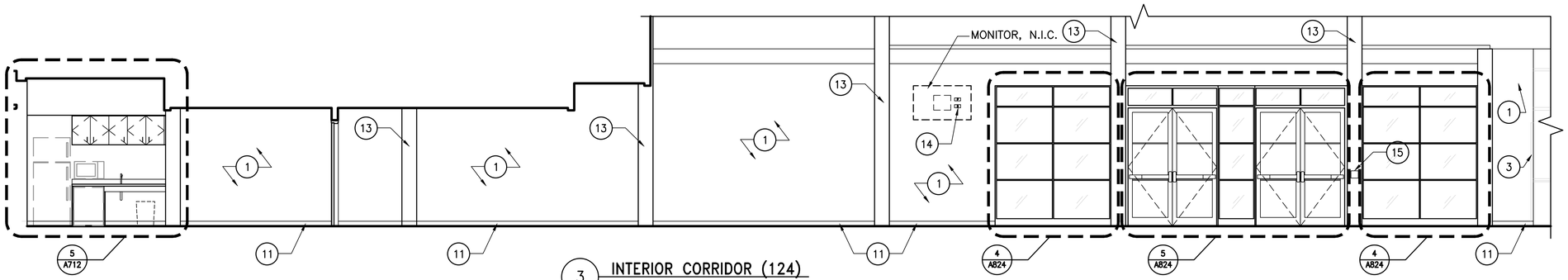

3 INTERIOR CORRIDOR (124)
1/4"=1'-0"

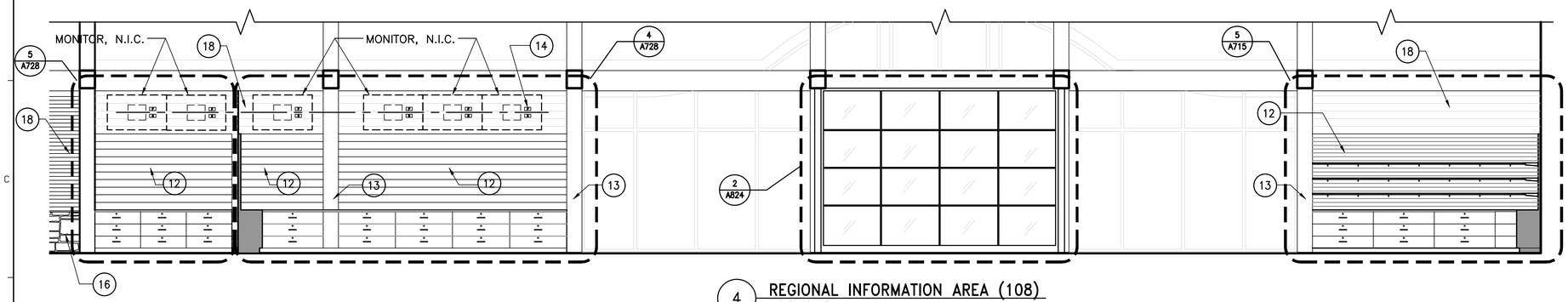

4 REGIONAL INFORMATION AREA (108)
1/4"=1'-0"

GENERAL NOTES

1. ALL METAL STUDS TO BE GALVANIZED UNLESS OTHERWISE NOTED.
2. SEE SPECIFIED PAINT SCHEDULE.
3. REFER TO SPECIFICATIONS FOR ACCESSORIES.
4. ALL WALL TILE WT-4 UON.
5. REFER TO A005 FOR TYPICAL MOUNTING HEIGHTS AND CLEARANCES REQUIRED.

KEY NOTES

1. PAINTED GWB
2. CERAMIC TILE
3. CORNER GUARD(S)
4. SOLID SURFACE COUNTERTOP
11. BASE – SEE ROOM FINISH SCHEDULE
12. WOOD SLAT WALL
13. WOOD TIMBER COLUMN
14. ELECTRICAL & DATA OUTLETS
15. AUTOMATIC DOOR PUSH BUTTON
16. 1"± THK. STONE VENEER, REFER TO SPECIFICATIONS
17. INDOOR COUNTER SWING GATE AND PANELS; PRODUCT / MODEL TBD
18. ACOUSTIC WOOD-LOOKS PANELS

AECOM
1 FEDERAL STREET, 8TH FLOOR
BOSTON, MA 02110
617.723.1700
www.aecom.com

STATE OF MAINE
DEPARTMENT OF TRANSPORTATION

	DATE

FED P/N NO: NA
WIN NO: 017163.02 & 017163.03

LICENSED ARCHITECT KARLA MICHELLE WENGER No. 5292 STATE OF MAINE

SIGNATURE
ARCH. LIN. NUMBER ARC5292
DATE JANUARY 17, 2022

PROJECT INFORMATION	
PROGRAM	-
PROJECT MANAGER	-
DESIGNER	AECOM
CONSULTANT	-
PROJECT RESIDENT	-
CONTRACTOR	-
PROJECT COMPLETION DATE	-

MAINE DEPARTMENT OF TRANSPORTATION
ACADIA GATEWAY FACILITY
INTERMODAL AND WELCOME CENTER

ROOM ELEVATIONS V

SHEET NUMBER
A714

\\na.aecomnet.com\lfs\AMER\Boston-USBOS01\DCS\Projects\TRN\60653001_MaineDOT_Acadia_Gateway\900_CAD_GIS\910_CAD\Sheet\A714.dwg Jan 17, 2022 - 3:30pm

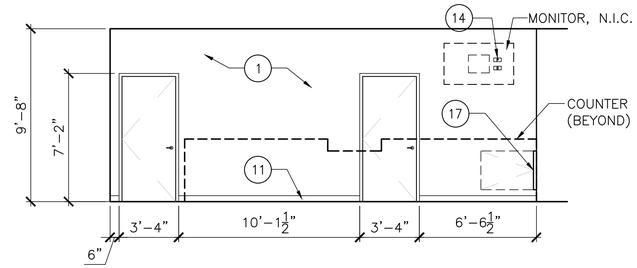

1 NPS/ENS AND ENS BACKWALL (112 & 113)
1/4"=1'-0"

2 NOT USED
1/4"=1'-0"

3 NOT USED
1/4"=1'-0"

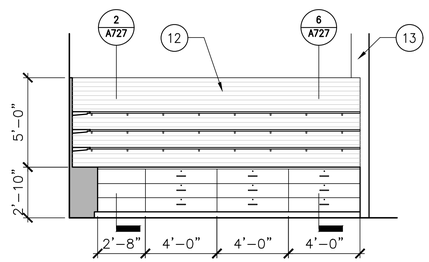

4 NPS/ENS AREA (112)
1/4"=1'-0"

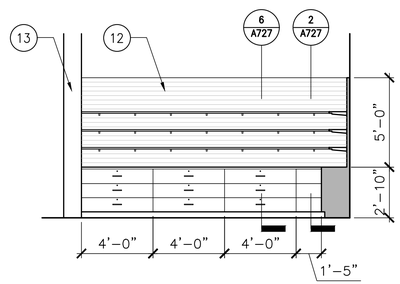

5 NPS/ENS AREA (112)
1/4"=1'-0"

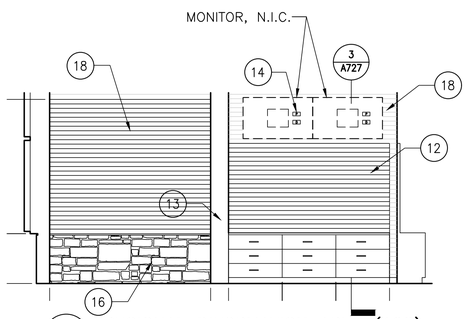

6 REGIONAL INFORMATION AREA (108)
1/4"=1'-0"

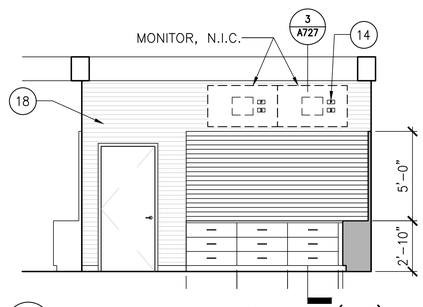

7 REGIONAL INFORMATION AREA (108)
1/4"=1'-0"

8 NOT USED
1/4"=1'-0"

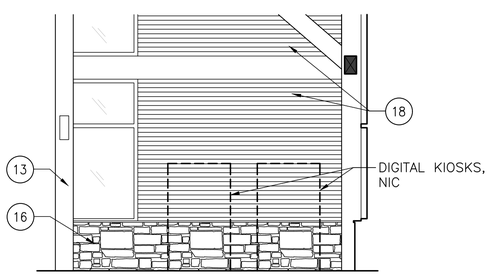

9 REGIONAL INFORMATION AREA (108)
1/4"=1'-0"

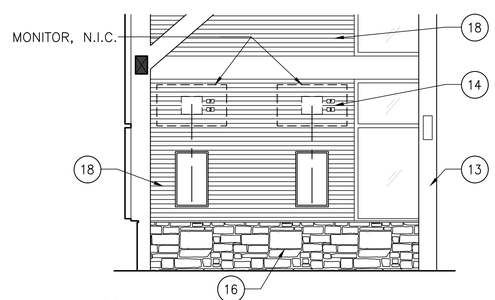

10 OPEN AREA (107)
1/4"=1'-0"

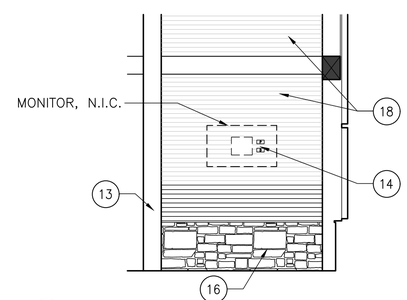

11 OPEN AREA (107)
1/4"=1'-0"

GENERAL NOTES

1. ALL METAL STUDS TO BE GALVANIZED UNLESS OTHERWISE NOTED.
2. SEE SPECIFIED PAINT SCHEDULE.
3. REFER TO SPECIFICATIONS FOR ACCESSORIES.
4. ALL WALL TILE WT-4 UON.
5. REFER TO A005 FOR TYPICAL MOUNTING HEIGHTS AND CLEARANCES REQUIRED.

KEY NOTES

1. PAINTED GWB
3. CORNER GUARD(S)
4. SOLID SURFACE COUNTERTOP
11. BASE – SEE ROOM FINISH SCHEDULE
12. WOOD SLAT WALL
13. WOOD TIMBER COLUMN
14. ELECTRICAL & DATA OUTLETS
15. AUTOMATIC DOOR PUSH BUTTON
16. 1"± THK. STONE VENEER, REFER TO SPECIFICATIONS
17. INDOOR COUNTER SWING GATE AND PANELS; PRODUCT / MODEL TBD
18. ACOUSTIC WOOD-LOOKS PANELS

AECOM
1 FEDERAL STREET, 8TH FLOOR
BOSTON, MA 02110
617.723.1700
www.aecom.com

STATE OF MAINE
DEPARTMENT OF TRANSPORTATION

DATE

FED PIN NO: NA
WIN NO: 017163.02 & 017163.03

LICENSED ARCHITECT KATYA MICHELLE WENGLER No. 5292 STATE OF MAINE

SIGNATURE

ARCH. LIN. NUMBER ARC5292

DATE JANUARY 17, 2022

PROJECT INFORMATION	
PROGRAM	–
PROJECT MANAGER	–
DESIGNER	AECOM
CONSULTANT	–
PROJECT RESIDENT	–
CONTRACTOR	–
PROJECT COMPLETION DATE	–

MAINE DEPARTMENT OF TRANSPORTATION
ACADIA GATEWAY FACILITY
INTERMODAL AND WELCOME CENTER

ROOM ELEVATIONS VI

SHEET NUMBER
A715

\\na.aecomnet.com\lfs\AMER\Boston-USBOS01\DCS\Projects\TRN\60653001_MaineDOT_Acadia_Gateway\900_CAD_GIS\910_CAD\Sheet\A715.dwg Mar 08, 2022 - 4:09pm

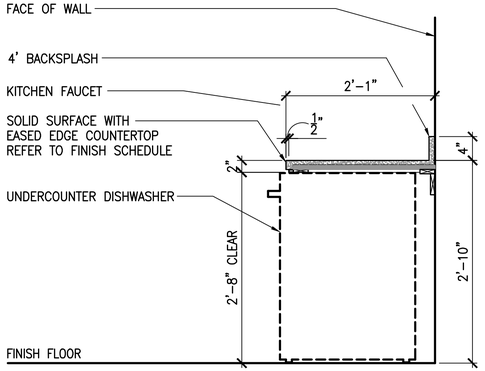

NOTE: PROVIDE BLOCKING AT WALLS WHERE REQUIRED FOR CABINET INSTALLATION.

1 LOWER CABINET MILLWORK @ DISHWASHER
1"=1'-0"

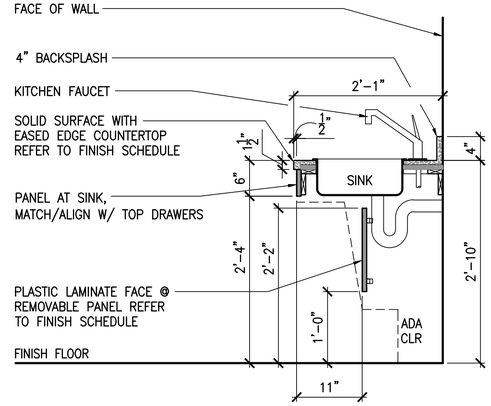

NOTE: PROVIDE BLOCKING AT WALLS WHERE REQUIRED FOR CABINET INSTALLATION.

2 LOWER CABINET MILLWORK @ ADA SINK W/PANEL
1"=1'-0"

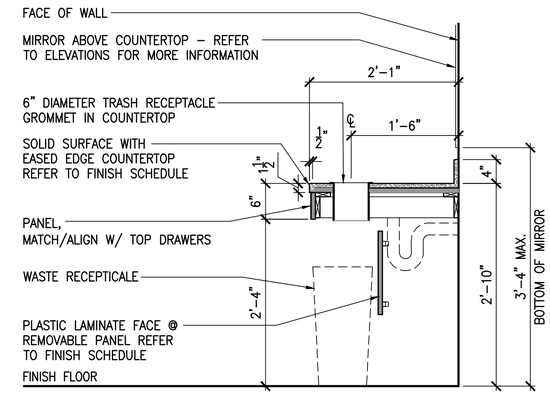

NOTES: 1. PROVIDE BLOCKING AT WALLS WHERE REQUIRED FOR COUNTERTOP INSTALLATION.

3 LOWER CABINET MILLWORK W/DOOR & DRAWER
1"=1'-0"

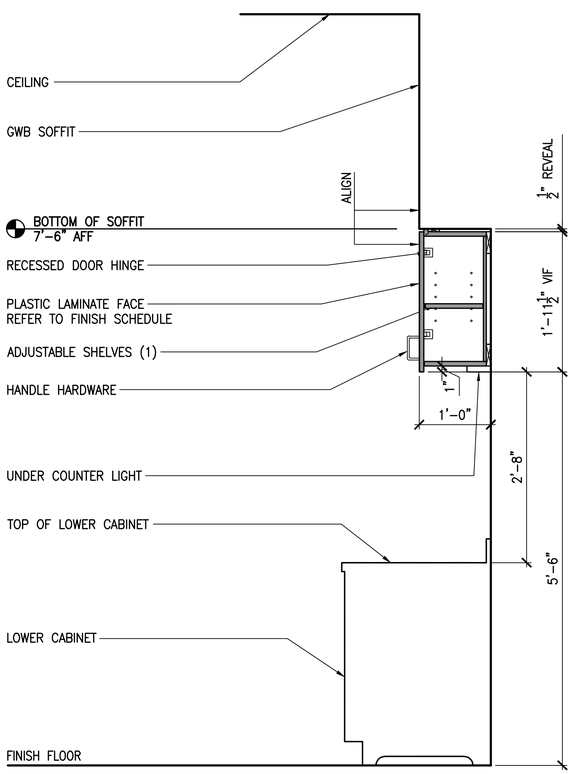

NOTE: PROVIDE BLOCKING AT WALLS WHERE REQUIRED FOR CABINET INSTALLATION.

4 UPPER CABINET MILLWORK
1"=1'-0"

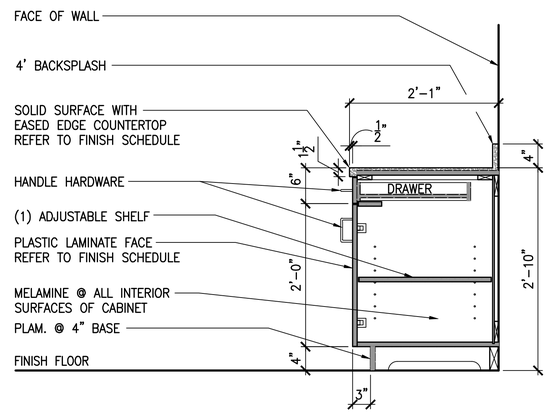

NOTES: 1. ALL TOP DRAWERS AND PANEL AT SINK SHALL BE THE SAME SIZE AND ALIGN.
2. PROVIDE BLOCKING AT WALLS WHERE REQUIRED FOR CABINET INSTALLATION.

5 LOWER CABINET MILLWORK W/DOOR & DRAWER
1"=1'-0"

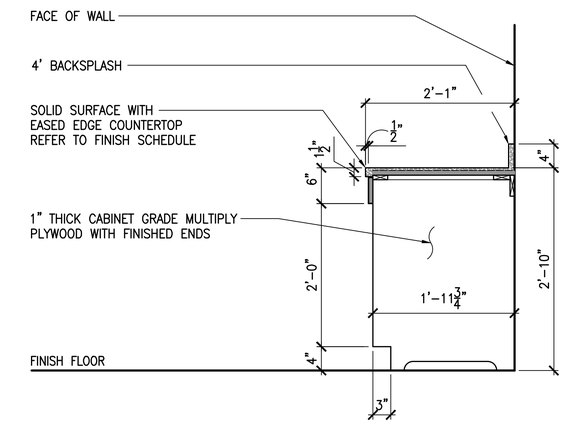

6 LOWER CABINET MILLWORK END
1"=1'-0"

AECOM
1 FEDERAL STREET, 8TH FLOOR
BOSTON, MA 02110
617.723.1700
www.aecom.com

STATE OF MAINE
DEPARTMENT OF TRANSPORTATION

DATE

FED P/N NO: NA
WIN NO: 017163.02 & 017163.03

LICENSED ARCHITECT KATLA MICHELLE WENGLER No. 5292 STATE OF MAINE

SIGNATURE
ARCH. LIN. NUMBER ARC5292
DATE JANUARY 17, 2022

PROJECT INFORMATION	
PROGRAM	–
PROJECT MANAGER	–
DESIGNER	AECOM
CONSULTANT	–
PROJECT RESIDENT	–
CONTRACTOR	–
PROJECT COMPLETION DATE	–

MAINE DEPARTMENT OF TRANSPORTATION
ACADIA GATEWAY FACILITY
INTERMODAL AND WELCOME CENTER
MILLWORK I

SHEET NUMBER
A720

\\na.aecomnet.com\lfs\AMER\Boston-USBOS01\DCS\Projects\TRN\60653001_MaineDOT_Acadia_Gateway\900_CAD_GIS\910_CAD\Sheet\A720.dwg Jan 17, 2022 - 3:31pm

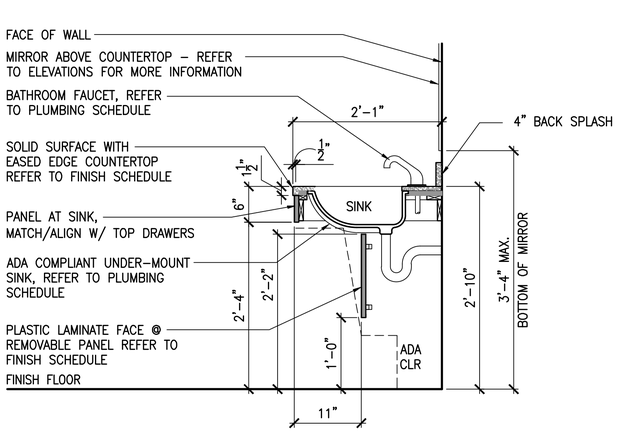

NOTES: 1. PROVIDE BLOCKING AT WALLS WHERE REQUIRED FOR CABINET INSTALLATION.

1 LAVATORY COUNTERTOP @ ADA SINK W/PANEL
1"=1'-0"

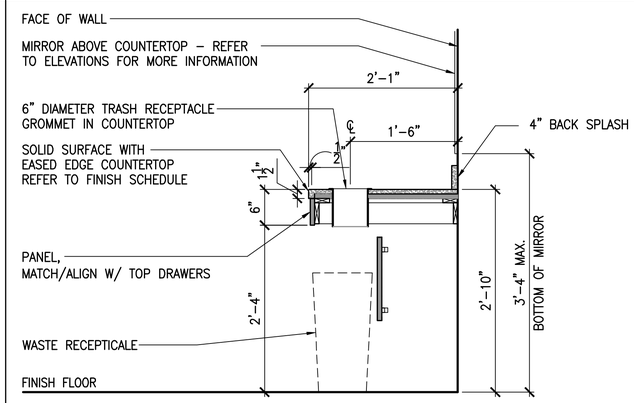

NOTES: 1. PROVIDE BLOCKING AT WALLS WHERE REQUIRED FOR COUNTERTOP INSTALLATION.

2 LAVATORY COUNTERTOP
1"=1'-0"

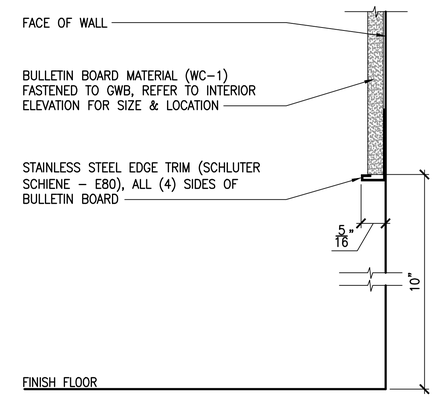

3 SECTION DETAIL @ BULLETIN BOARD
1"=1'-0"

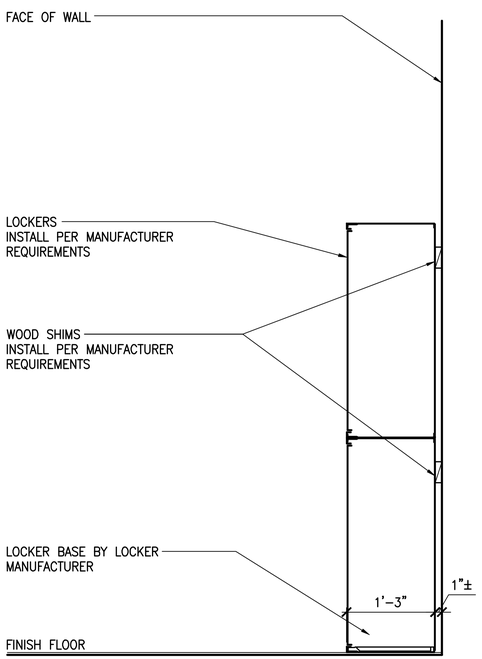

NOTES: 1. PROVIDE BLOCKING AT WALLS WHERE REQUIRED FOR LOCKER INSTALLATION.

4 LOCKER DETAIL @ ADA BASE
1"=1'-0"

AECOM
1 FEDERAL STREET, 8TH FLOOR
BOSTON, MA 02110
617.723.1700
www.aecom.com

STATE OF MAINE
DEPARTMENT OF TRANSPORTATION

DATE	
FED P/N NO: NA	
WIN NO: 017163.02 & 017163.03	

LICENSED ARCHITECT KARLA MICHELLE WENGLER No. 5292 STATE OF MAINE

SIGNATURE	
ARCH. LIN. NUMBER	ARC5292
DATE	JANUARY 17, 2022

PROJECT INFORMATION	
PROGRAM	–
PROJECT MANAGER	–
DESIGNER	AECOM
CONSULTANT	–
PROJECT RESIDENT	–
CONTRACTOR	–
PROJECT COMPLETION DATE	–

MAINE DEPARTMENT OF TRANSPORTATION
ACADIA GATEWAY FACILITY
INTERMODAL AND WELCOME CENTER
MILLWORK II

SHEET NUMBER
A721

\\na.aecomnet.com\lfs\AMER\Boston-USBOS01\DCS\Projects\TRN\60653001_MaineDOT_Acadia_Gateway\900_CAD_GIS\910_CAD\Sheet\A721.dwg Jan 17, 2022 - 3:31pm

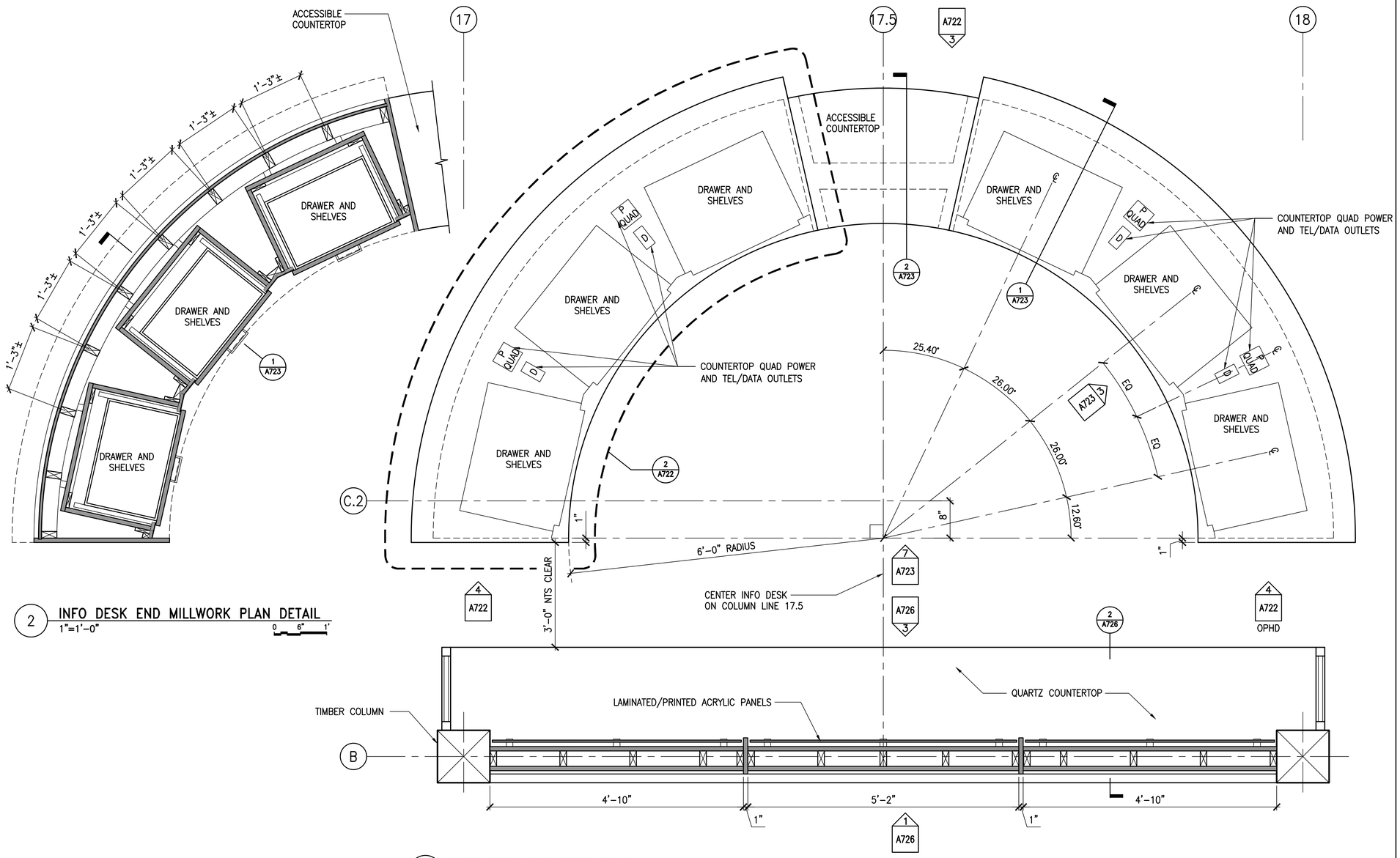

2 INFO DESK END MILLWORK PLAN DETAIL
1"=1'-0"

1 INFO DESK ENLARGED PLAN
1"=1'-0"

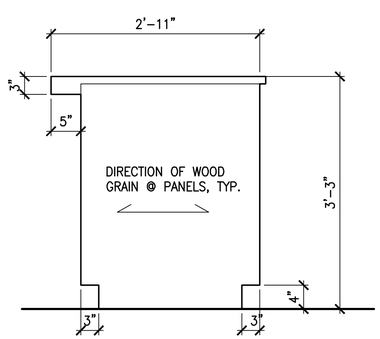

4 INFO DESK END MILLWORK ELEVATION
1"=1'-0"

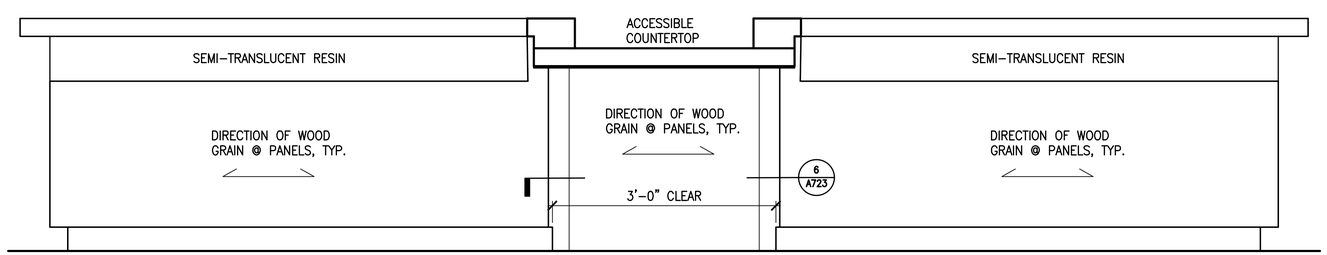

3 INFO DESK FRONT ELEVATION
1"=1'-0"

AECOM
1 FEDERAL STREET, 8TH FLOOR
BOSTON, MA 02110
617.723.1700
www.aecom.com

STATE OF MAINE
DEPARTMENT OF TRANSPORTATION

	DATE

FED PIN NO: NA
WIN NO: 017163.02 & 017163.03

LICENSED ARCHITECT KARYLA MICHELLE WENGLER No. 5292 STATE OF MAINE

SIGNATURE
ARCH. LIN. NUMBER ARC5292
DATE JANUARY 17, 2022

PROJECT INFORMATION	
PROGRAM	–
PROJECT MANAGER	–
DESIGNER	AECOM
CONSULTANT	–
PROJECT RESIDENT	–
CONTRACTOR	–
PROJECT COMPLETION DATE	–

MAINE DEPARTMENT OF TRANSPORTATION
ACADIA GATEWAY FACILITY
INTERMODAL AND WELCOME CENTER
MILLWORK III

SHEET NUMBER
A722

\\na.aecomnet.com\fs\AMER\Boston-USBOS01\DCS\Projects\TRN\60653001_MaineDOT_Acadia_Gateway\900_CAD_GIS\910_CAD\Sheet\A722.dwg Jan 17, 2022 - 3:32pm

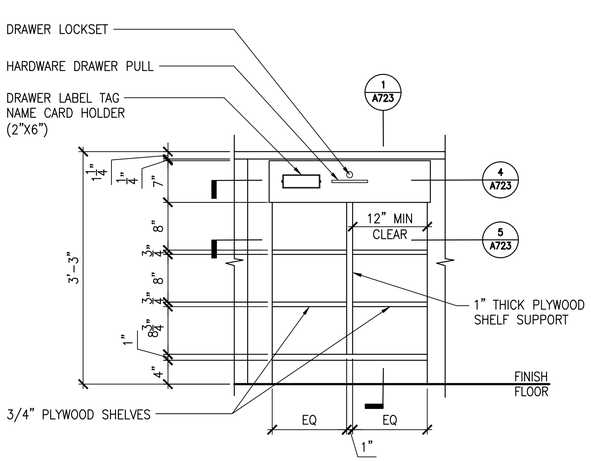

3 INFO DESK DRAWER AND SHELF MILLWORK ELEVATION
1"=1'-0"

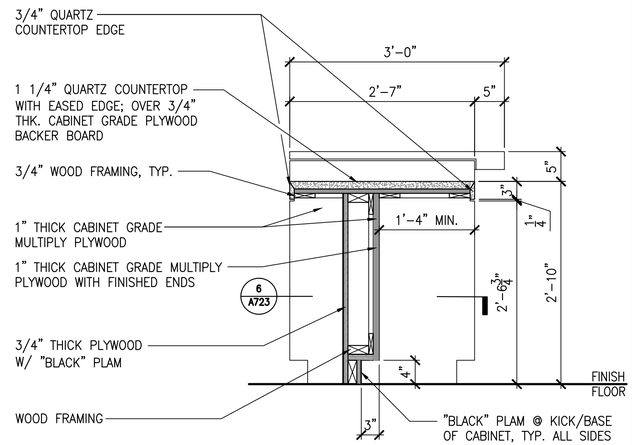

2 INFO DESK ACCESSIBLE MILLWORK SECTION
1"=1'-0"

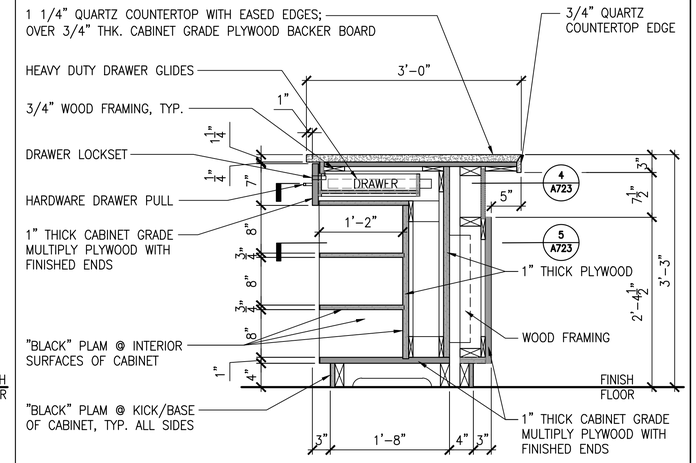

1 INFO DESK DRAWER AND SHELF MILLWORK SECTION
1"=1'-0"

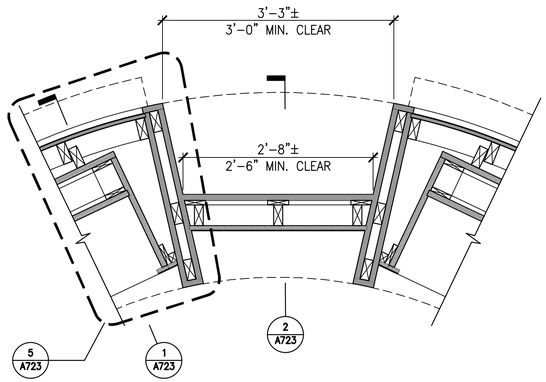

6 INFO DESK ACCESSIBLE MILLWORK PLAN DETAIL
1"=1'-0"

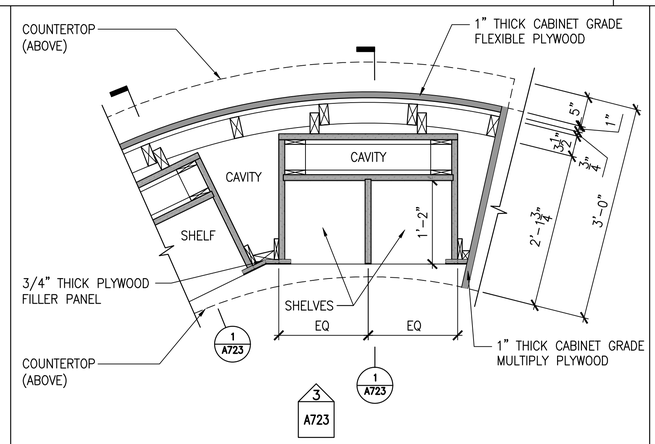

5 INFO DESK SHELVES MILLWORK PLAN DETAIL
1"=1'-0"

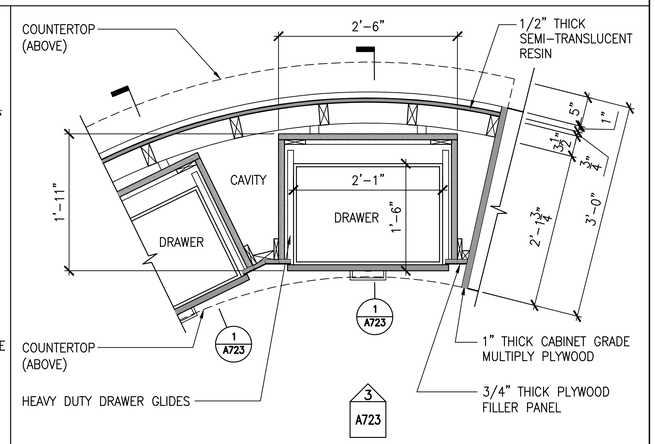

4 INFO DESK DRAWER MILLWORK PLAN DETAIL
1"=1'-0"

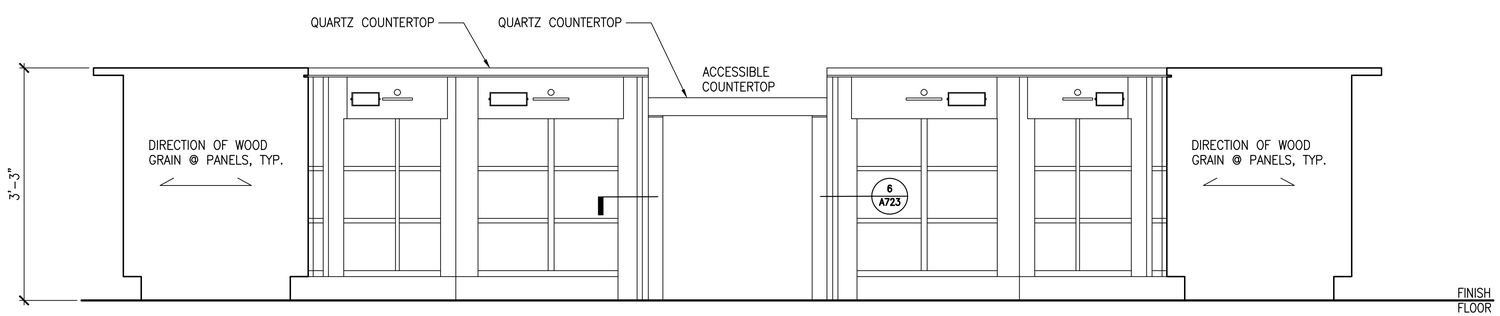

7 INFO DESK BACK ELEVATION
1"=1'-0"

AECOM
1 FEDERAL STREET, 8TH FLOOR
BOSTON, MA 02110
617.723.1700
www.aecom.com

STATE OF MAINE
DEPARTMENT OF TRANSPORTATION

DATE

FED PIN NO: NA
WIN NO: 017163.02 & 017163.03

LICENSED ARCHITECT KAYLA MICHELLE WENGLER No. 5292 STATE OF MAINE

SIGNATURE
ARCH. LIN. NUMBER ARC5292
DATE JANUARY 17, 2022

INFORMATION	
PROJECT	–
PROGRAM	–
PROJECT MANAGER	–
DESIGNER	AECOM
CONSULTANT	–
PROJECT RESIDENT	–
CONTRACTOR	–
PROJECT COMPLETION DATE	–

MAINE DEPARTMENT OF TRANSPORTATION
ACADIA GATEWAY FACILITY
INTERMODAL AND WELCOME CENTER
MILLWORK IV

SHEET NUMBER
A723

\\na.aecomnet.com\lfs\AMER\Boston-USBOS01\DCS\Projects\TRN\60653001_MaineDOT_Acadia_Gateway\900_CAD_GIS\910_CAD\Sheet\A723.dwg Jan 20, 2022 - 5:56pm

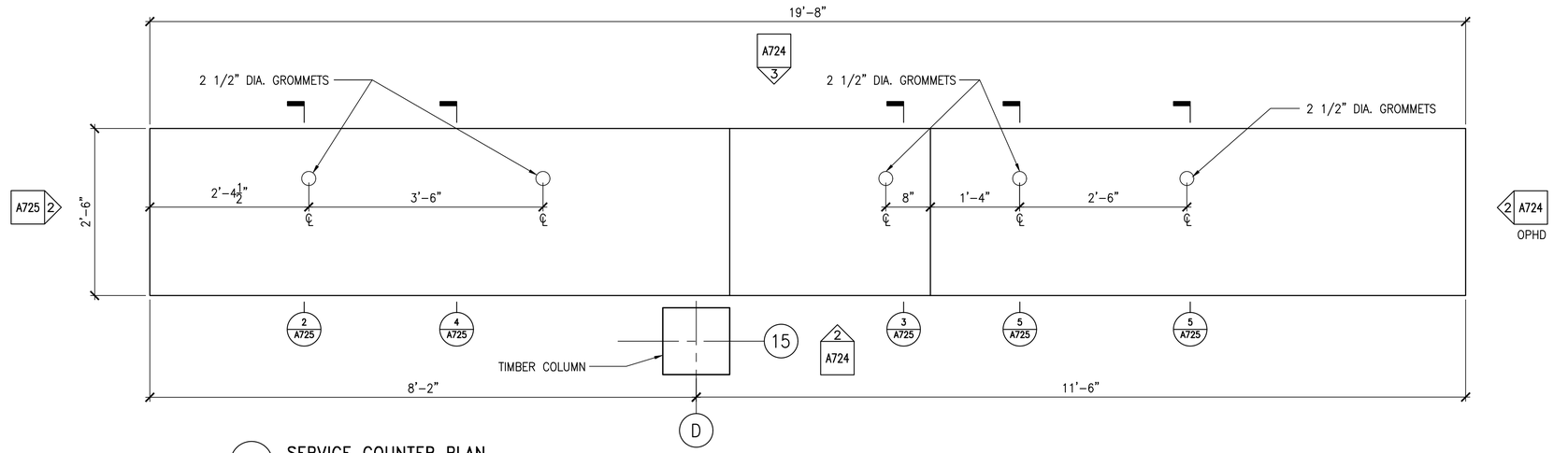

1 SERVICE COUNTER PLAN
1"=1'-0"

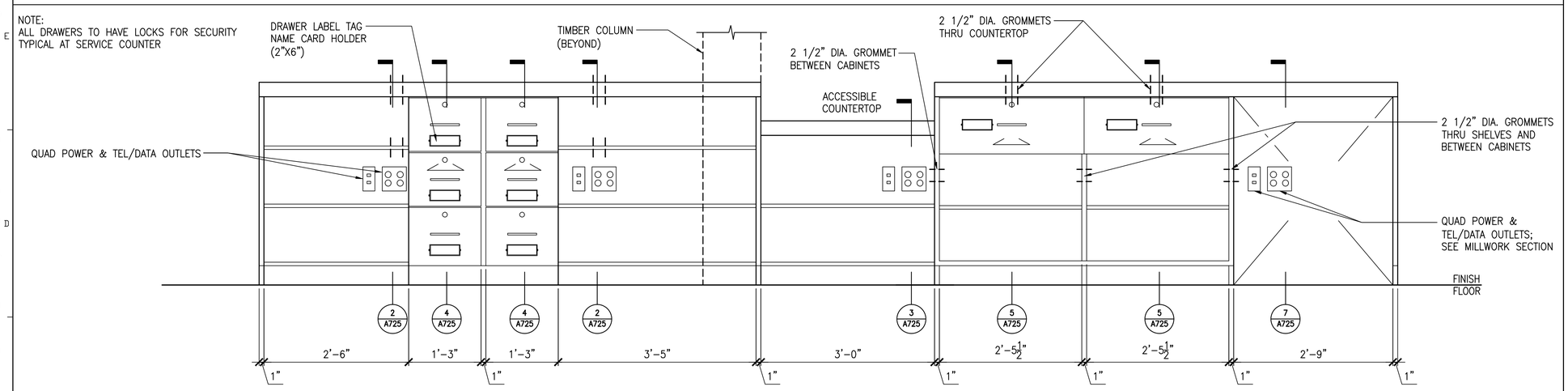

2 SERVICE COUNTER REAR ELEVATION
1"=1'-0"

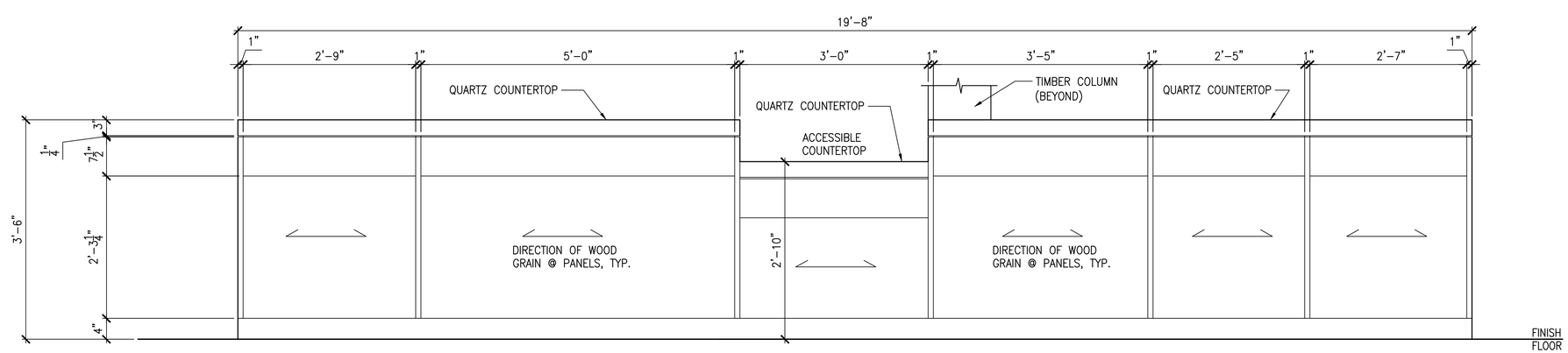

3 SERVICE COUNTER FRONT ELEVATION
1"=1'-0"

AECOM
1 FEDERAL STREET, 8TH FLOOR
BOSTON, MA 02110
617.723.1700
www.aecom.com

STATE OF MAINE
DEPARTMENT OF TRANSPORTATION

	DATE
FED PIN NO: NA	
WIN NO: 017163.02 & 017163.03	

LICENSED ARCHITECT
KAYLA MICHELLE WENGLER
No. 5292
STATE OF MAINE

SIGNATURE

ARCH. LIN. NUMBER
ARC5292

DATE JANUARY 17, 2022

PROJECT	INFORMATION
PROGRAM	–
PROJECT MANAGER	–
DESIGNER	AECOM
CONSULTANT	–
PROJECT RESIDENT	–
CONTRACTOR	–
PROJECT COMPLETION DATE	–

MAINE DEPARTMENT OF TRANSPORTATION
ACADIA GATEWAY FACILITY
INTERMODAL AND WELCOME CENTER

MILLWORK V

SHEET NUMBER
A724

\\na.aecomnet.com\lfs\AMER\Boston-USBOS01\DCS\Projects\TRN\60653001_MaineDOT_Acadia_Gateway\900_CAD_GIS\910_CAD\Sheet\A724.dwg Jan 28, 2022 - 9:32am

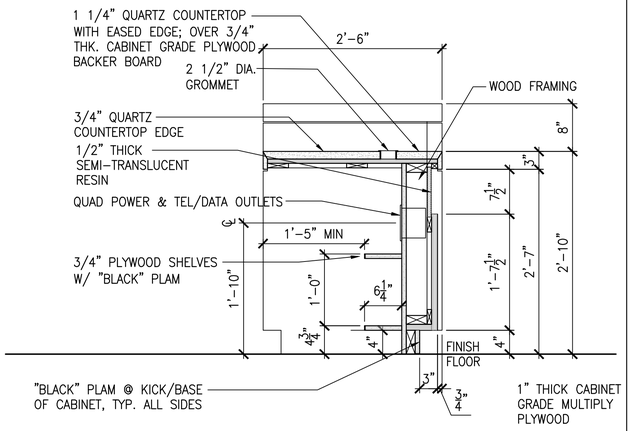

3 SERVICE COUNTER ACCESSIBLE MILLWORK SECTION
1"=1'-0"

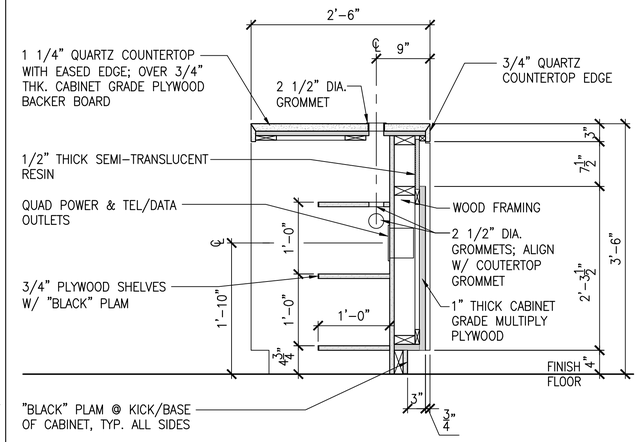

2 SERVICE COUNTER WORK STATION MILLWORK SECTION
1"=1'-0"

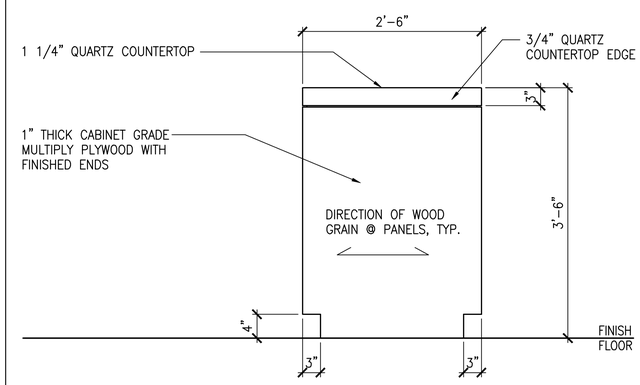

1 SERVICE COUNTER END MILLWORK ELEVATION
1"=1'-0"

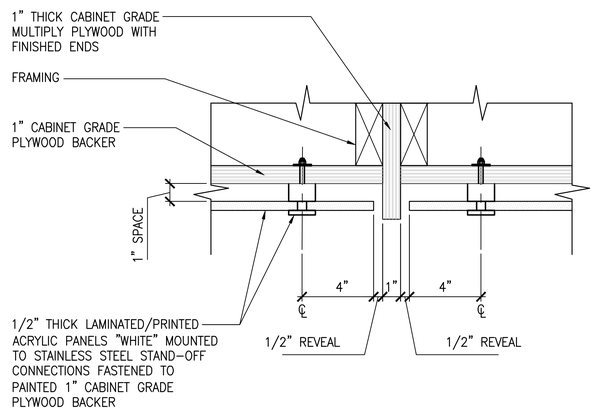

6 LAMINATED ACRYLIC PANEL DETAIL
3"=1'-0"

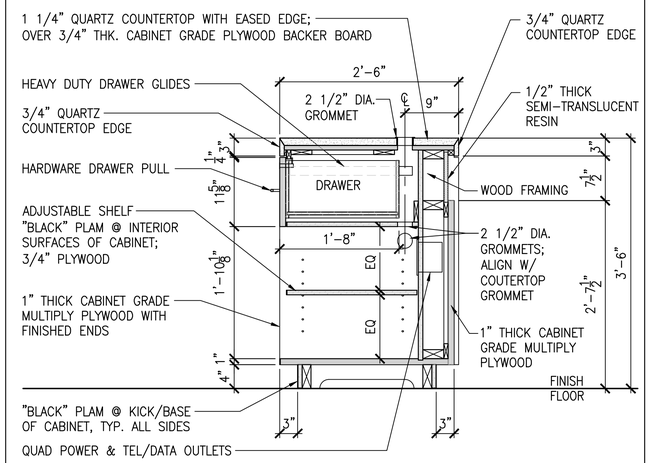

5 SERVICE COUNTER DRAWER AND SHELF MILLWORK SECTION
1"=1'-0"

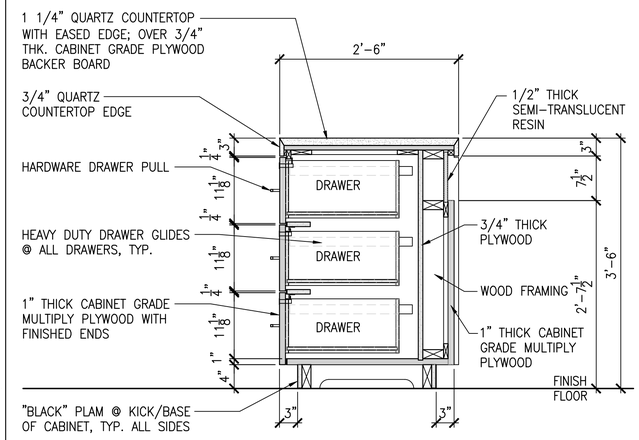

4 SERVICE COUNTER DRAWER MILLWORK SECTION
1"=1'-0"

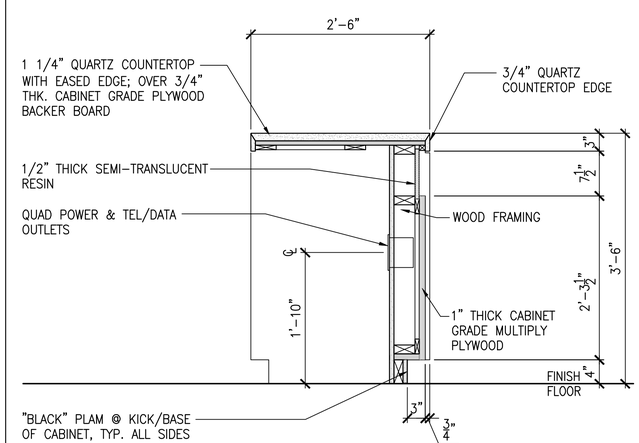

7 SERVICE COUNTER WORK STATION MILLWORK SECTION
1"=1'-0"

AECOM
1 FEDERAL STREET, 8TH FLOOR
BOSTON, MA 02110
617.723.1700
www.aecom.com

STATE OF MAINE
DEPARTMENT OF TRANSPORTATION

DATE

FED PIN NO: NA
WIN NO: 017163.02 & 017163.03

LICENSED ARCHITECT KATYA MICHELLE WENGLER No. 5292 STATE OF MAINE

PROJECT INFORMATION	
PROGRAM	-
PROJECT MANAGER	-
DESIGNER	AECOM
CONSULTANT	-
PROJECT RESIDENT	-
CONTRACTOR	-
PROJECT COMPLETION DATE	-

SIGNATURE
ARCH. LIN. NUMBER ARC5292
DATE JANUARY 17, 2022

MAINE DEPARTMENT OF TRANSPORTATION
ACADIA GATEWAY FACILITY
INTERMODAL AND WELCOME CENTER
MILLWORK VI

SHEET NUMBER
A725

\\na.aecomnet.com\lfs\AMER\Boston-USBOS01\DCS\Projects\TRN\60653001_MaineDOT_Acadia_Gateway\900_CAD_GIS\910_CAD\Sheet\A725.dwg Jan 28, 2022 - 9:26am

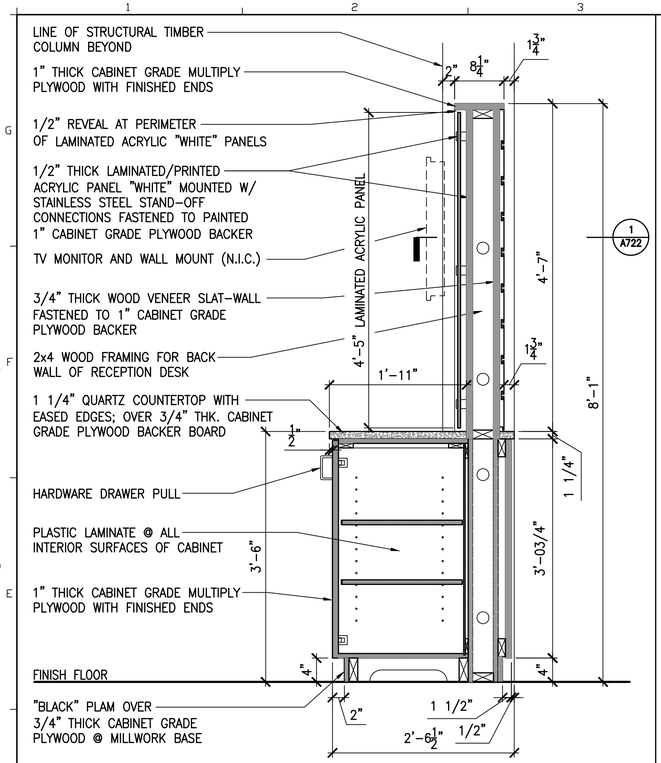

2 SECTION @ LOCKABLE AV STRG., INFO. DESK BACK CNTR.
1"=1'-0"

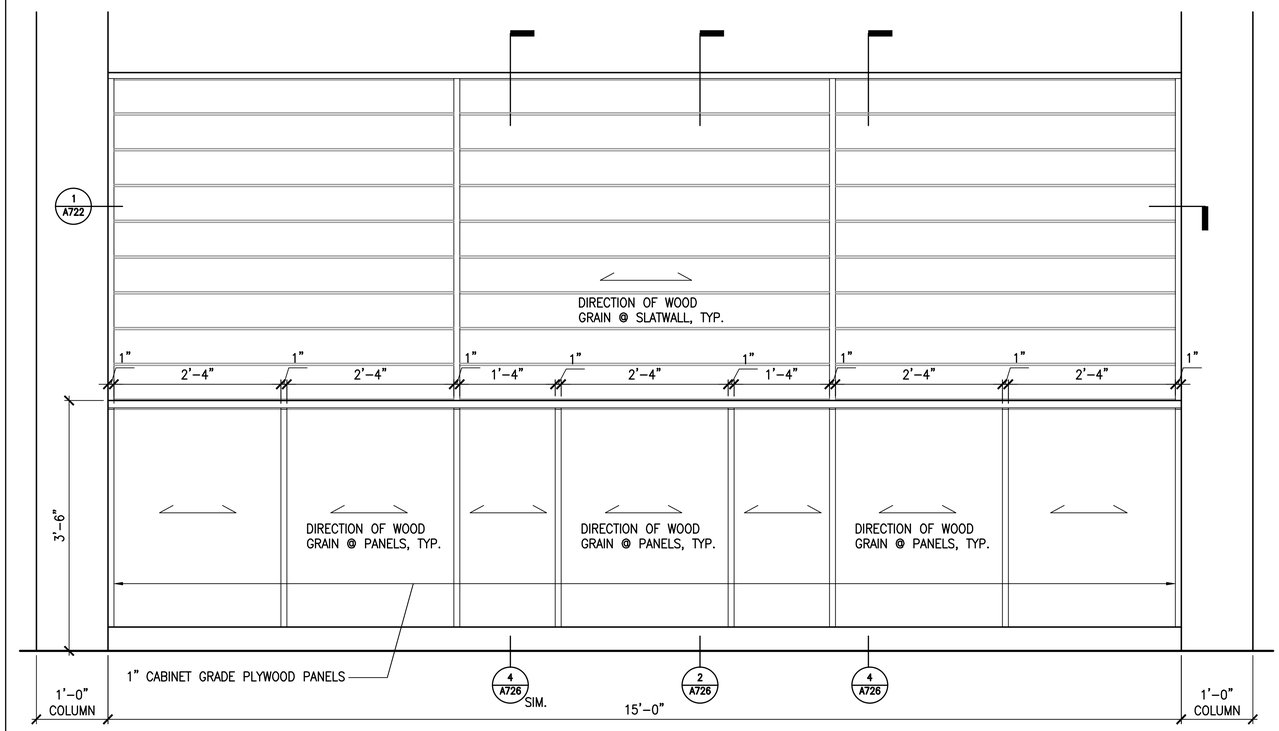

1 BACK ELEVATION @ INFORMATION DESK BACK COUNTER
1"=1'-0"

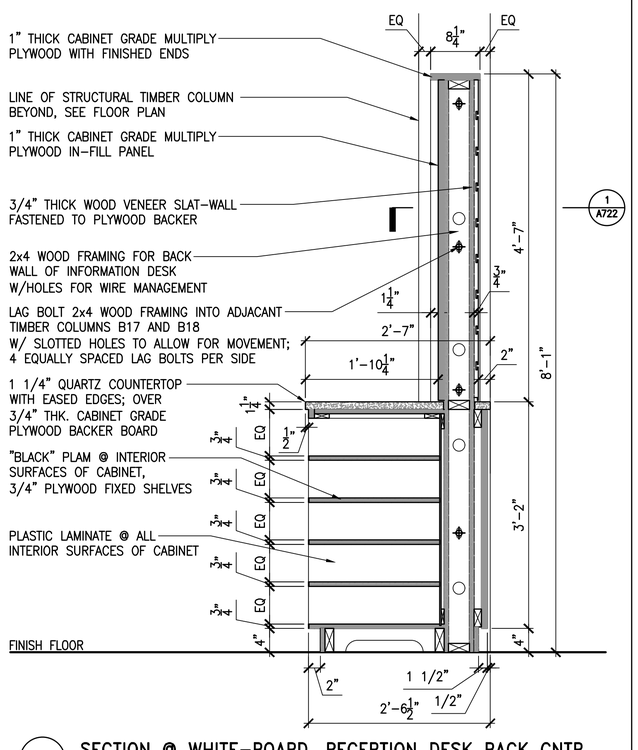

4 SECTION @ WHITE-BOARD, RECEPTION DESK BACK CNTR.
1"=1'-0"

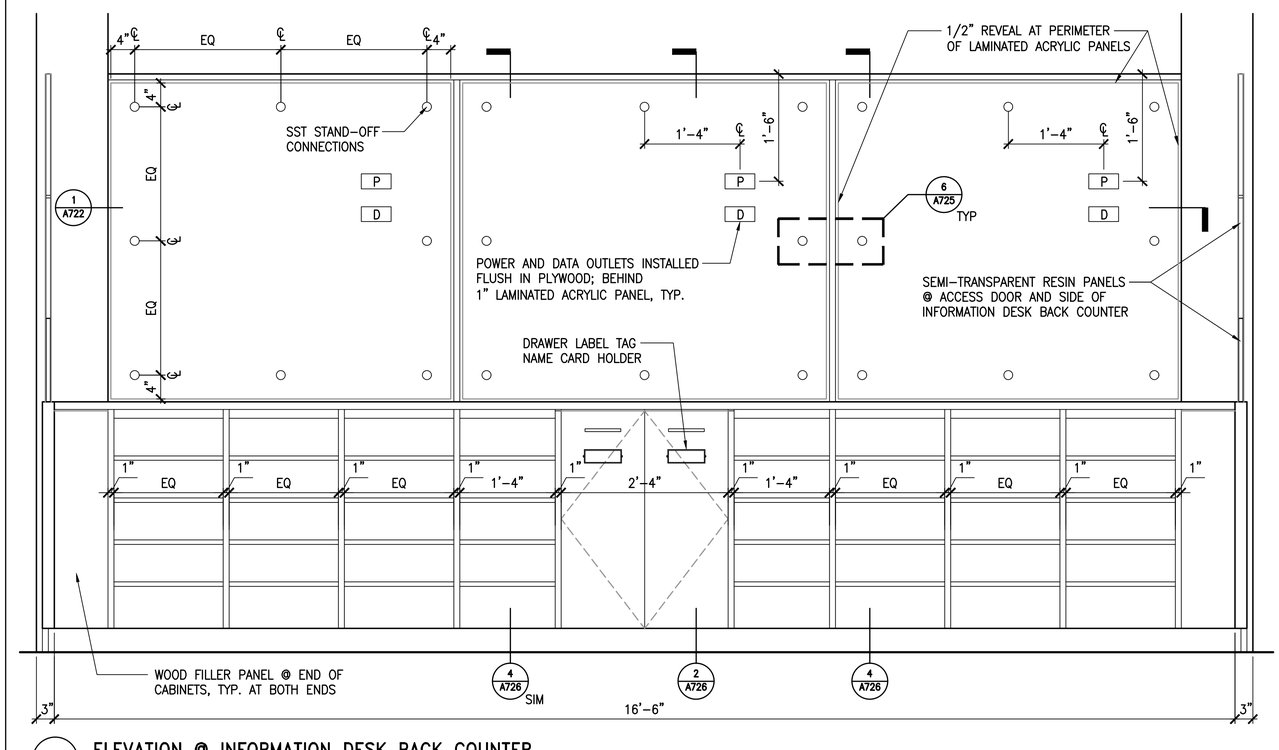

3 ELEVATION @ INFORMATION DESK BACK COUNTER
1"=1'-0"

AECOM
1 FEDERAL STREET, 8TH FLOOR
BOSTON, MA 02110
617.723.1700
www.aecom.com

STATE OF MAINE
DEPARTMENT OF TRANSPORTATION

DATE

FED PIN NO: NA

WIN NO: 017163.02 & 017163.03

LICENSED ARCHITECT KATLA MICHELLE WENGLER No. 5292 STATE OF MAINE

SIGNATURE

ARCH. LIN. NUMBER ARC5292

DATE JANUARY 17, 2022

PROJECT	INFORMATION
PROGRAM	-
PROJECT MANAGER	-
DESIGNER	AECOM
CONSULTANT	-
PROJECT RESIDENT	-
CONTRACTOR	-
PROJECT COMPLETION DATE	-

MAINE DEPARTMENT OF TRANSPORTATION
ACADIA GATEWAY FACILITY
INTERMODAL AND WELCOME CENTER
MILLWORK VII

SHEET NUMBER
A726

\\na.aecomnet.com\lfs\AMER\Boston-USBOS01\DCS\Projects\TRN\60653001_MaineDOT_Acadia_Gateway\900_CAD_GIS\910_CAD\Sheet\A726.dwg Jan 17, 2022 - 3:33pm

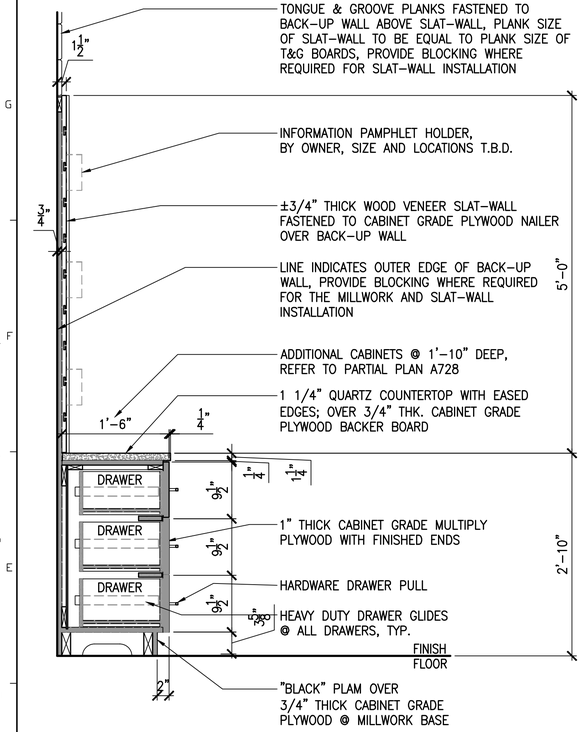

3 SECTION @ REGIONAL INFO. CABINET / SLAT-WALL
1"=1'-0"

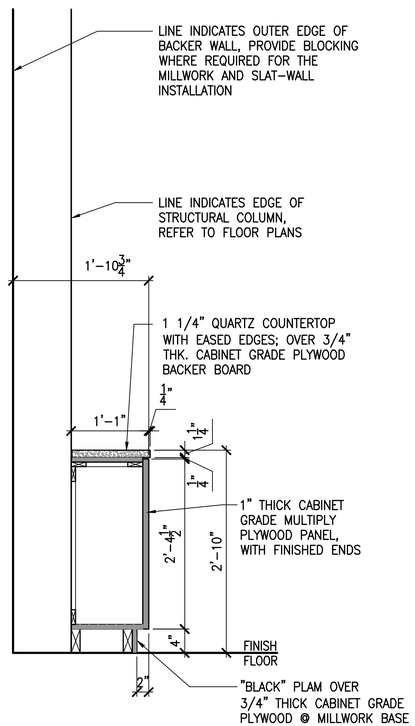

2 SECTION @ REGIONAL INFO. FILLER CABINET
1"=1'-0"

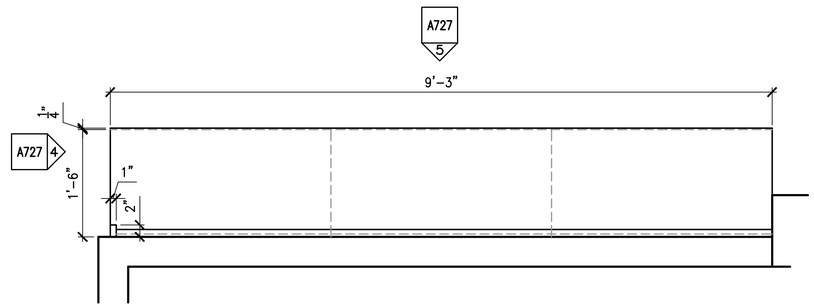

1 PARTIAL PLAN @ REGIONAL INFO. AREA
1"=1'-0"

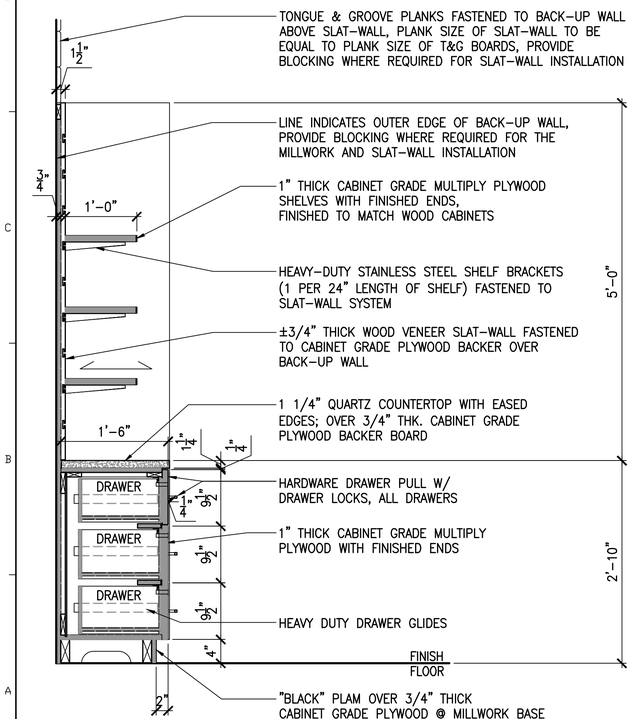

6 SECTION @ REGIONAL INFO. CAB./SLAT-WALL/SHELVES
1"=1'-0"

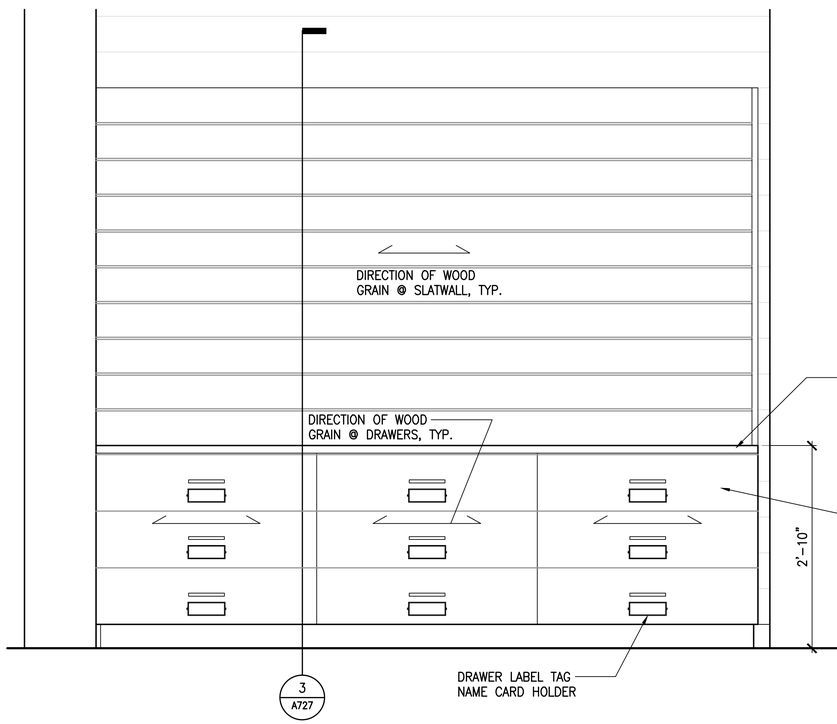

5 ELEVATION @ REGIONAL INFO. AREA
1"=1'-0"

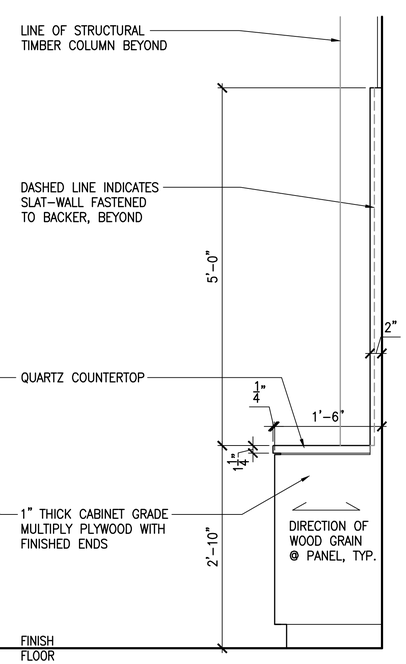

4 SIDE ELEVATION @ REGIONAL INFO. AREA
1"=1'-0"

AECOM
1 FEDERAL STREET, 8TH FLOOR
BOSTON, MA 02110
617.723.1700
www.aecom.com

STATE OF MAINE
DEPARTMENT OF TRANSPORTATION

DATE

FED P/N NO: NA
WIN NO: 017163.02 & 017163.03

LICENSED ARCHITECT KARYLA MICHELLE WENGLER No. 5292 STATE OF MAINE

SIGNATURE
ARCH. LIC. NUMBER ARC5292
DATE JANUARY 17, 2022

PROJECT INFORMATION	
PROGRAM	-
PROJECT MANAGER	-
DESIGNER	AECOM
CONSULTANT	-
PROJECT RESIDENT	-
CONTRACTOR	-
PROJECT COMPLETION DATE	-

MAINE DEPARTMENT OF TRANSPORTATION
ACADIA GATEWAY FACILITY
INTERMODAL AND WELCOME CENTER
MILLWORK VIII

SHEET NUMBER
A727

\\na.aecomnet.com\lfs\AMER\Boston-USBOS01\DCS\Projects\TRN\60653001_MaineDOT_Acadia_Gateway\900_CAD_GIS\910_CAD\Sheet\A727.dwg Jan 17, 2022 - 3:34pm

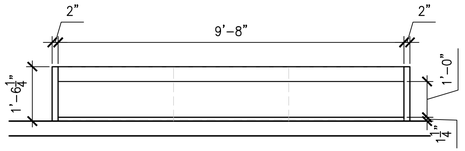

2 PARTIAL PLAN @ RETAIL/BOOKSTORE WALL CABINETS
1/2"=1'-0"

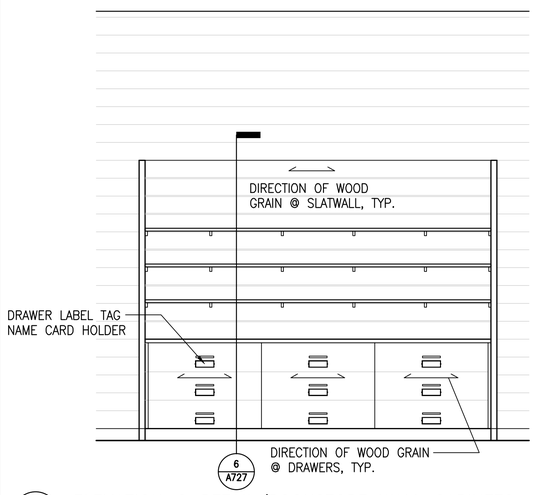

3 ELEVATION @ RETAIL/BOOKSTORE WALL CABINETS
1/2"=1'-0"

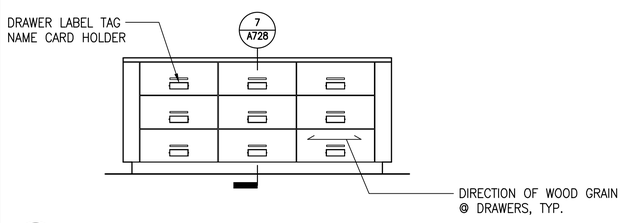

6 ELEVATION @ REGIONAL INFO. AREA
1/2"=1'-0"

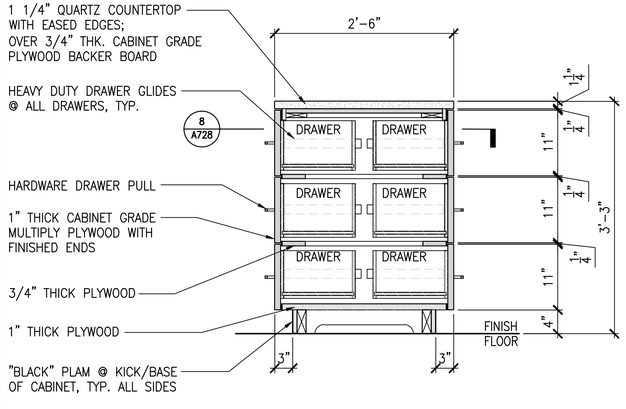

9 MILLWORK SECTION
1"=1'-0"

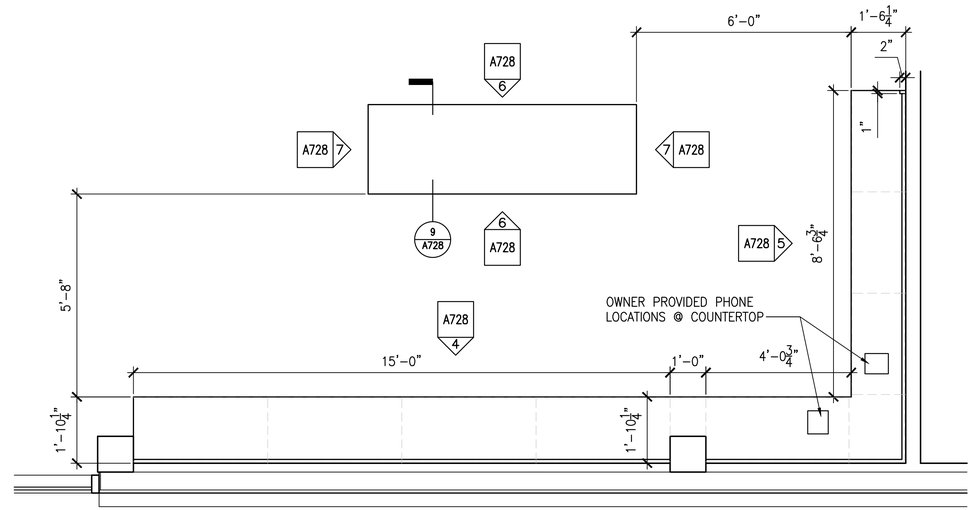

1 PARTIAL PLAN @ REGIONAL INFO. AREA
1/2"=1'-0"

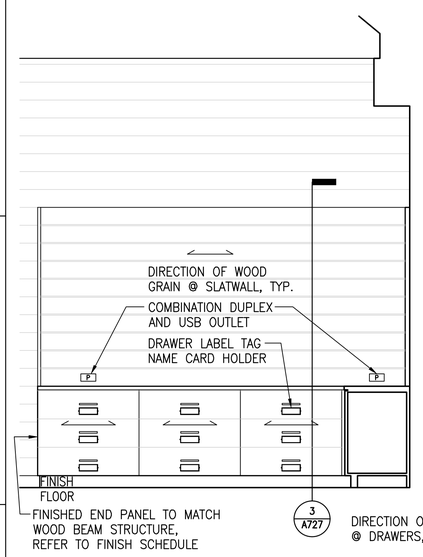

5 ELEVATION @ REGIONAL INFO. AREA
1/2"=1'-0"

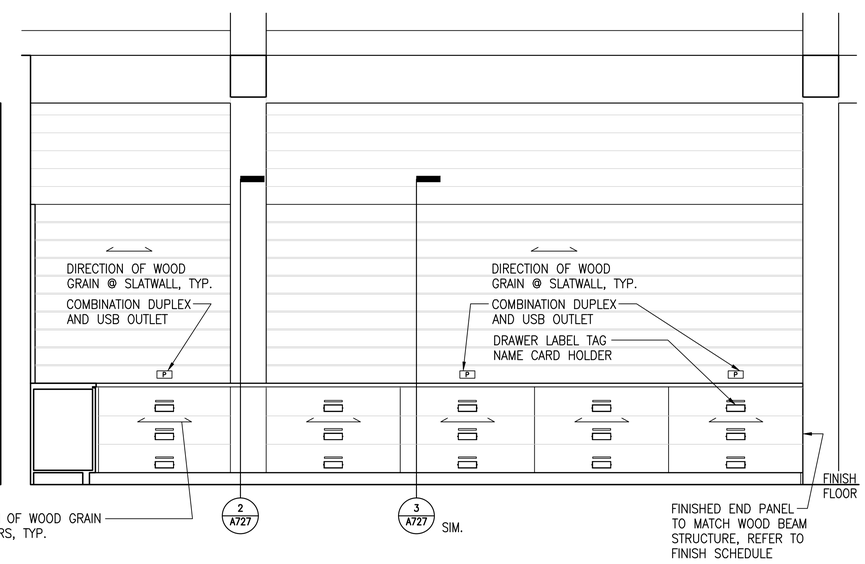

4 ELEVATION @ REGIONAL INFO. AREA
1/2"=1'-0"

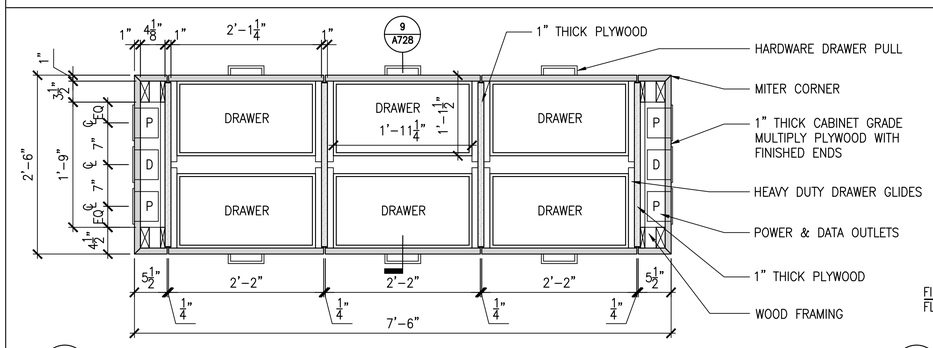

8 MILLWORK SECTION
1"=1'-0"

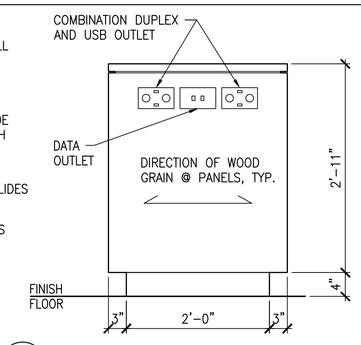

7 MILLWORK END ELEVATION
1"=1'-0"

AECOM
1 FEDERAL STREET, 8TH FLOOR
BOSTON, MA 02110
617.723.1700
www.aecom.com

STATE OF MAINE
DEPARTMENT OF TRANSPORTATION

DATE

FED PIN NO: NA
WIN NO: 017163.02 & 017163.03

LICENSED ARCHITECT KARYLA MICHELLE WENGLER No. 5292 STATE OF MAINE

SIGNATURE
ARCH. LIN. NUMBER ARC5292
DATE JANUARY 17, 2022

PROJECT	INFORMATION
PROGRAM	-
PROJECT MANAGER	-
DESIGNER	AECOM
CONSULTANT	-
PROJECT RESIDENT	-
CONTRACTOR	-
PROJECT COMPLETION DATE	-

MAINE DEPARTMENT OF TRANSPORTATION
ACADIA GATEWAY FACILITY
INTERMODAL AND WELCOME CENTER
MILLWORK IX

SHEET NUMBER
A728

\\na.aecomnet.com\lfs\AMER\Boston-USBOS01\DCS\Projects\TRN\60653001_MaineDOT_Acadia_Gateway\900_CAD_GIS\910_CAD\Sheet\A728.dwg Jan 26, 2022 - 11:54am

ROOM FINISH SCHEDULE

ROOM NO	ROOM NAME	FLOOR		BASE		NORTH WALL		EAST WALL		SOUTH WALL		WEST WALL		CEILING			NOTES
		FINISH	COLOR	FINISH	COLOR	FINISH	COLOR	FINISH	COLOR	FINISH	COLOR	FINISH	COLOR	FINISH	COLOR	HEIGHT	
001	FIRE PUMP ROOM	FL-2	NONE	VB-1	BLACK	PT-1	WHITE	PT-1	WHITE	PT-1	WHITE	PT-1	WHITE	NONE	--	--	
002	WATER ROOM	FL-2	NONE	VB-1	BLACK	PT-1	WHITE	PT-1	WHITE	PT-1	WHITE	PT-1	WHITE	NONE	--	--	
003	ELECTRICAL ROOM	FL-2	NONE	VB-1	BLACK	PT-1	WHITE	PT-1	WHITE	PT-1	WHITE	PT-1	WHITE	NONE	--	--	
004	MECHANICAL ROOM 1	FL-2	NONE	VB-1	BLACK	PT-1	WHITE	PT-1	WHITE	PT-1	WHITE	PT-1	WHITE	NONE	--	--	
005	STAIR 1	FL-2	NONE	VB-1	BLACK	PT-1	WHITE	PT-1	WHITE	PT-1	WHITE	PT-1	WHITE	NONE	--	--	
006	CORRIDOR	FL-2	NONE	VB-1	BLACK	PT-1	WHITE	PT-1	WHITE	PT-1	WHITE	PT-1	WHITE	NONE	--	--	
007	TELCOM ROOM	FL-2	NONE	VB-1	BLACK	PT-1	WHITE	PT-1	WHITE	PT-1	WHITE	PT-1	WHITE	NONE	--	--	
008	MECHANICAL ROOM 2	FL-2	NONE	VB-1	BLACK	PT-1	WHITE	PT-1	WHITE	PT-1	WHITE	PT-1	WHITE	NONE	--	--	
009	EMERGENCY ELECTRICAL CLOSET	FL-2	NONE	VB-1	BLACK	PT-1	WHITE	PT-1	WHITE	PT-1	WHITE	PT-1	WHITE	NONE	--	--	
101	WOMEN'S TOILET	T-1	--	TB-1	--	WT-4/5/6	--	WT-4/5/6	--	WT-4/5/6	--	WT-4/5/6	--	ACT-1	WHITE	8'-0"	
102	MEN'S TOILET	T-1	--	TB-1	--	WT-4/5/6	--	WT-4/5/6	--	WT-4/5/6	--	WT-4/5/6	--	ACT-1	WHITE	8'-0"	
103	NURSING	T-1	--	TB-1	--	WT-4/5/6	--	WT-4/5/6	--	WT-4/5/6	--	WT-4/5/6	--	ACT-1	WHITE	8'-0"	
104	COMPANION CARE	T-1	--	TB-1	--	WT-4/5/6	--	WT-4/5/6	--	WT-4/5/6	--	WT-4/5/6	--	ACT-1	WHITE	8'-0"	
105	LOBBY / VESTIBULE	FL-1	--	TB-1	--	--	--	PT-1	WHITE	--	--	PT-1	WHITE	WDC-1	--	9'-6"	
106	PASSENGER WAITING AND EXHIBITS	FL-1	--	TB-1	--	STVR	--	STVR	--	--	--	STVR	--	WOOD	STAIN	--	
107	OPEN AREA	FL-1	--	TB-1	--	STVR/WDAT	--	STVR/WDAT	--	STVR/WDAT	--	--	--	WOOD	STAIN	--	
108	REGIONAL INFORMATION AREA	FL-1	--	TB-1	--	--	--	STVR/WDAT	--	STVR/WDAT	--	--	--	WOOD	STAIN	--	
109	MTA OFFICE	CPT-1	--	VB-1	BLACK	PT-1	WHITE	PT-1	WHITE	PT-1	WHITE	PT-1	WHITE	ACT-1	WHITE	11'-0"	
110	OPEN AREA	FL-1	--	TB-1	--	--	--	--	--	--	--	--	--	WOOD	STAIN	--	
111	INFORMATION COUNTER	FL-1	--	TB-1	--	--	--	--	--	--	--	--	--	WOOD	STAIN	--	
112	NPS/ENS AREA	FL-1	--	TB-1	--	--	--	--	--	WDTG	--	PT-1	WHITE	WOOD	STAIN	--	
113	NPS/ENS COUNTER	FL-1	--	TB-1	--	PT-1	WHITE	--	--	PT-1	WHITE	PT-1	WHITE	WDC-1	--	8'-0"	
114	CORRIDOR	FL-1	--	TB-1	--	PT-1	WHITE	--	--	PT-1	WHITE	PT-1	WHITE	WDC-1	--	9'-6"	
115	BREAKROOM / KITCHEN	T-2	--	TB-1	--	PT-1	WHITE	PT-1	WHITE	PT-1	WHITE	PT-1	WHITE	ACT-1	WHITE	10'-0"	
116	STAIR 1	FL-2	NONE	VB-1	BLACK	PT-1	WHITE	PT-1	WHITE	PT-1	WHITE	PT-1	WHITE	NONE	--	--	
117	CORRIDOR	FL-2	NONE	TB-1	--	PT-1	WHITE	PT-1	WHITE	PT-1	WHITE	PT-1	WHITE	ACT-1	WHITE	8'-0"	
118	EN SALES OFFICE	CPT-1	--	VB-1	BLACK	PT-1	WHITE	PT-1	WHITE	PT-1	WHITE	PT-1	WHITE	ACT-1	WHITE	8'-0"	
119	FEES OFFICE	CPT-1	--	VB-1	BLACK	PT-1	WHITE	PT-1	WHITE	PT-1	WHITE	PT-1	WHITE	ACT-1	WHITE	8'-0"	
120	EN SALES STORAGE	FL-2	NONE	VB-1	BLACK	PT-1	WHITE	PT-1	WHITE	PT-1	WHITE	PT-1	WHITE	PAINT	BLACK	--	
121	RECEIVING	FL-2	NONE	VB-1	BLACK	PT-1	WHITE	PT-1	WHITE	PT-1	WHITE	PT-1	WHITE	PAINT	BLACK	--	
122	MTA STORAGE	FL-2	NONE	VB-1	BLACK	PT-1	WHITE	PT-1	WHITE	PT-1	WHITE	PT-1	WHITE	ACT-1	WHITE	8'-0"	
123	VENDING	FL-1	--	TB-1	--	PT-1	WHITE	--	--	PT-1	WHITE	PT-1	WHITE	GWB	WHITE	7'-0"	
124	JANITOR CLOSET AND STORAGE	T-1	--	VB-1	BLACK	PT-1	WHITE	PT-1	WHITE	PT-1	WHITE	PT-1	WHITE	ACT-1	WHITE	8'-0"	SPLASH GUARD SHEATHING AT MOP SINK – SEE ELEVATIONS
125	SOUTH VESTIBULE	FL-1	--	TB-1	--	--	--	--	--	--	--	--	--	GLASS	CLEAR	VIF	
150	EV CHARGING ENCLOSURE	FL-2	--	NONE	--	PT-1	WHITE	PT-1	WHITE	PT-1	WHITE	PT-1	WHITE	NONE	--	--	EXTERIOR PAINT FOR WOOD AND CONCRETE
201	STAIR 1	FL-2	--	VB-1	BLACK	PT-1	WHITE	PT-1	WHITE	PT-1	WHITE	PT-1	WHITE	PT-1	WHITE	23'-4"	PAINTED METAL DECK AT CEILING (5" CONCRETE SLAB ON METAL DECK)
202	MEZZANINE LOBBY	VCT-1	--	VB-1	BLACK	PT-1	WHITE	PT-1	WHITE	PT-1	WHITE	PT-1	WHITE	ACT-1	WHITE	10'-0"	
203	MECHANICAL ROOM 3	FL-2	--	VB-1	BLACK	PT-1	WHITE	PT-1	WHITE	PT-1	WHITE	PT-1	WHITE	NONE	--	--	
204	UNASSIGNED	VCT-1	--	VB-1	BLACK	PT-1	WHITE	PT-1	WHITE	PT-1	WHITE	PT-1	WHITE	ACT-1	WHITE	12'-0"	

GENERAL ROOM FINISH NOTES:

SEE SHEET A614 FOR FINISH SCHEDULE AND ABBREVIATIONS.

AECOM
1 FEDERAL STREET, 8TH FLOOR
BOSTON, MA 02110
617.723.1700
www.aecom.com

STATE OF MAINE
DEPARTMENT OF TRANSPORTATION

DATE

FED PIN NO: NA

WIN NO: 017163.02 & 017163.03

LICENSED ARCHITECT KAYLA MICHELLE WENGLER No. 5292 STATE OF MAINE

SIGNATURE

ARCH. LIN. NUMBER ARC5292

DATE JANUARY 17, 2022

PROJECT INFORMATION	
PROGRAM	-
PROJECT MANAGER	-
DESIGNER	AECOM
CONSULTANT	-
PROJECT RESIDENT	-
CONTRACTOR	-
PROJECT COMPLETION DATE	-

MAINE DEPARTMENT OF TRANSPORTATION
ACADIA GATEWAY FACILITY
INTERMODAL AND WELCOME CENTER

ROOM FINISH SCHEDULE

SHEET NUMBER
A801

\\na.aecomnet.com\fs\AMER\Boston-USBOS01\DCS\Projects\TRN\60653001_MaineDOT_Acadia_Gateway\900_CAD_GIS\910_CAD\Sheet\A801.dwg Mar 08, 2022 - 4:09pm

DOOR SCHEDULE

DOOR NO	ROOM NAME	FROM (LOCK SIDE)	TO	PAIR OR SINGLE	DOOR OPENING WIDTH	DOOR OPENING HEIGHT	DOOR TYPE	DOOR MATERIAL	DOOR FINISH	FRAME TYPE	FRAME MATERIAL	FRAME FINISH	DETAIL HEAD	DETAIL JAMB	DETAIL THRESHOLD	DETAIL JAMB DEPTH	FIRE LABEL	HWDE SET	NOTES
001	FIRE PUMP ROOM	CORRIDOR – 006	FIRE PUMP ROOM – 001	P	6'–0"	7'–0"	1	HM		A	HM		1/A804	4/A804	7/A804	6"	B	14	
002	WATER ROOM	CORRIDOR – 006	WATER ROOM – 002	P	6'–0"	7'–0"	1	HM		A	HM		1/A804	4/A804	7/A804	6"	B	14	
003	ELECTRICAL ROOM	CORRIDOR – 006	ELECTRICAL ROOM – 003	S	3'–0"	7'–0"	1	HM		A	HM		1/A804	4/A804	7/A804	6"	B	15	
004	MECHANICAL ROOM 1	CORRIDOR – 006	MECHANICAL ROOM 1 – 004	P	6'–0"	7'–0"	1	HM		A	HM		1/A804	4/A804	7/A804	6"	B	14	
005	STAIR 1	CORRIDOR – 006	STAIR 1 – 005	S	3'–0"	7'–0"	3	HM		B	HM		2/A804	5/A804	7/A804	6"	B	18	
007	TELCOM ROOM	CORRIDOR – 006	TELCOM ROOM – 007	S	3'–0"	7'–0"	1	HM		A	HM		1/A804	4/A804	7/A804	6"	B	16	
008	MECHANICAL ROOM 2	CORRIDOR – 006	MECHANICAL ROOM 2 – 008	S	3'–0"	7'–0"	1	HM		A	HM		1/A804	4/A804	7/A804	6"	B	16	
009	EMERGENCY ELECTRICAL CLOSET	ELECTRICAL ROOM – 003	EMERG. ELEC. CLOSET – 009	P	6'–0"	7'–0"	1	HM		B	HM		2/A804	5/A804	7/A804	6"	A	17	
103	NURSING	WOMEN'S TOILET – 101	NURSING – 103	S	3'–0"	7'–0"	1	WOOD		A	WOOD		1/A804	4/A804	NONE	6"	–	19	UNDERCUT DOOR
104	COMPANION CARE	LOBBY / VESTIBULE – 105	COMPANION CARE – 104	S	3'–0"	7'–0"	1	WOOD		A	WOOD		1/A804	4/A804	NONE	6"	–	20	UNDERCUT DOOR
105A	LOBBY / VESTIBULE	LOBBY / VESTIBULE – 105	EXTERIOR	P	6'–0"	8'–0"	2	ALUMINUM	FF	CRTWAL	ALUMINUM	FF			7/A806	6"	–	1	COORDINATE WITH CURTAINWALL
105B	LOBBY / VESTIBULE	LOBBY / VESTIBULE – 105	EXTERIOR	P	6'–0"	8'–0"	2	ALUMINUM	FF	CRTWAL	ALUMINUM	FF			7/A806	6"	–	2	COORDINATE WITH CURTAINWALL
105C	PASSENGER WAITING & EXHIBITS	LOBBY / VESTIBULE – 105	PSNGR WAITING & EXHIBITS–106	S	6'–0"	8'–0"	2A	STEEL	FF	STL	STL				NONE	5"	–	7	
105D	ANP FEE PASSES AND INFO	LOBBY / VESTIBULE – 105	ANP FEE PASSES AND INFO–111	P	6'–0"	8'–0"	2A	STEEL	FF	STL	STL				NONE	5"	–	2	
105E	ANP FEE PASSES AND INFO	LOBBY / VESTIBULE – 105	ANP FEE PASSES AND INFO–111	P	6'–0"	8'–0"	2A	STEEL	FF	STL	STL				NONE	5"	–	1	
109	MTA OFFICE	REGIONAL INFO AREA – 108	OFFICE – 109	S	3'–0"	7'–0"	4	WOOD		A	WOOD		1/A804	4/A804	NONE	6"	–	21	
114	CORRIDOR	CORRIDOR – 114	BREAKROOM / KITCHEN – 115	P	6'–0"	7'–0"	3	WOOD		A	WOOD		1/A804	4/A804	NONE	6"	–	10	
115	BREAKROOM / KITCHEN	BREAKROOM / KITCHEN – 115	EXTERIOR	P	6'–0"	8'–0"	2	ALUMINUM	FF	CRTWAL	ALUMINUM	FF			7/A806	6"	–	4	COORDINATE WITH CURTAINWALL
116A	STAIR 1	CORRIDOR – 117	STAIR 1 – 116	S	3'–0"	7'–0"	3	HM		B	HM		3/A804	6/A804	7/A804	6"	B	26	
116B	STAIR 1	EXTERIOR	STAIR 1 – 116	S	3'–0"	8'–0"	2	ALUMINUM	FF	CRTWAL	ALUMINUM	FF	2/A806	5,8/A806	7/A806	6"	–	5	COORDINATE WITH CURTAINWALL
118	ENS SALES OFFICE	ANP/NPS AREA COUNTER – 112	ENS SALES OFFICE – 118	S	3'–0"	7'–0"	4	WOOD		A	WOOD		1/A804	4/A804	NONE	6"	–	21	
119	FEES OFFICE	ENS COUNTER – 113	FEES OFFICE – 119	S	3'–0"	7'–0"	4	WOOD		A	WOOD		1/A804	4/A804	NONE	6"	–	21	
120	ENS SALES STORAGE	ANP/NPS AREA COUNTER – 112	ENS SALES STORAGE – 120	S	3'–0"	7'–0"	3	WOOD		A	WOOD		1/A804	4/A804	7/A804	6"	B	22	
121A	RECEIVING	CORRIDOR – 117	RECEIVING – 121	P	6'–0"	7'–0"	1	HM		A	HM		1/A804	4/A804	7/A804	6"	–	23	
121B	RECEIVING	RECEIVING – 121	EXTERIOR	S	3'–0"	8'–0"	1	HM		B	HM		3/A806	6,9/A806	7/A804	6"	–	6	
121C	ENS SALES STORAGE	RECEIVING – 121	ENS SALES STORAGE – 120	P	6'–0"	7'–0"	3	HM		A	HM		1/A804	4/A804	7/A804	6"	B	14	
121D	RECEIVING	RECEIVING – 121	EXTERIOR	O	6'–0"	8'–0"	5	STEEL	FF	C	STEEL		2/A805	2,3,4/A805	2/A805	N/A	–	N/A	OVERHEAD DOOR, SEE SPECS
121E	RECEIVING	SEE DETAILS	SEE DETAILS	P	4'–0"	6'–0"	10	STEEL	FF	10	STEEL		1/A807	2/A807	NONE	3.5"	B	N/A	MECHANICAL ROOM ACCESS FLOOR HATCH
122	STORAGE	RECEIVING – 121	STORAGE – 122	P	6'–0"	7'–0"	1	HM		A	HM		1/A804	4/A804	7/A804	6"	B	14	
124	JANITOR CLOSET AND STORAGE	LOBBY / VESTIBULE – 105	JANITOR CL. & STORAGE – 124	S	3'–6"	7'–0"	1	HM		A	HM		1/A804	4/A804	NONE	6"	–	24	UNDERCUT DOOR
125A	SOUTH VESTIBULE	SOUTH VESTIBULE – 125	EXTERIOR	P	6'–0"	8'–0"	2	ALUMINUM	FF	CRTWAL	ALUMINUM	FF			7/A806	6"	–	18	COORDINATE WITH CURTAINWALL
125B	ANP/NPS AREA	SOUTH VESTIBULE – 125	ANP/NPS AREA – 112	S	3'–0"	8'–0"	2A	STEEL	FF	STORE	HM		NONE		NONE	5"	–	7	
125C	ENS SALES INFO AREA	SOUTH VESTIBULE – 125	ENS SALES INFO AREA – 108	S	3'–0"	8'–0"	2A	STEEL	FF	STORE	HM		NONE		NONE	5"	–	7	
150	EV CHARGING ENCLOSURE	EV CHARGING ENCLOSURE –150	EXTERIOR	S	3'–0"	7'–0"	1	STEEL		B	HM		2/A804	5/A804	7/A804	5"	B	6	
201	STAIR 1	MEZZANINE LOBBY – 202	STAIR 1 – 201	S	3'–0"	7'–0"	1	HM	FF	B	HM		3/A804	6/A804	7/A804	6"	B	18	
203	MECHANICAL ROOM 3	MEZZANINE LOBBY – 202	MECHANICAL ROOM 3 – 203	P	6'–0"	7'–0"	1	HM	FF	A	HM		1/A804	4/A804	7/A804	8.25"	B	25	INCREASE LGMF HEADER AS REQ. TO SUPPORT PARTITION
204	UNASSIGNED	MEZZANINE LOBBY – 202	UNASSIGNED – 204	P	6'–0"	7'–0"	1	HM	FF	A	HM		1/A804	4/A804	7/A804	6"	B	25	

LOUVER / GRILLE SCHEDULE

LOUVER TYPE	MATERIAL	ROUGH OPENING WIDTH	ROUGH OPENING HEIGHT	DETAIL HEAD	DETAIL JAMB	DETAIL SILL	SCREEN	NOTES
L1	ALUM	15'–0"	12'–6"	3/A807	5/A807	5/A807	INSECT/BIRD	TRIANGULAR LOUVER, REFER TO LOUVER ELEVATIONS
L2	ALUM	15'–0"	12'–6"	3/A807	5/A807	5/A807	INSECT/BIRD	TRIANGULAR LOUVER, REFER TO LOUVER ELEVATIONS
L3	SEE SPEC.	4'–0"	2'–0"				NONE	REFER TO MECHANICAL DRAWINGS AND SPECIFICATIONS, VERIFY LOUVER SIZE WITH MECHANICAL DOCUMENTS

DOOR SCHEDULE ABBREVIATIONS:

(S) – DENOTES SINGLE LEAF DOOR
(PR) – DENOTES PAIR OF LEAF DOORS
(FF) – FACTORY FINISH
(PT) – PAINT
(HM) – HOLLOW METAL
(ST) – STEEL
(CRTWAL) – CURTAINWALL

DOOR NOTES:

1. ALL GLASS IN DOORS SHALL BE SAFETY GLAZING
2. HOUR RATINGS FOR HM DOORS
   A = 3 HOUR (NOT USED)
   B = 1.5 HOUR
   C = .75 HOUR

LOUVER TYPE:
–EXTRUDED ALUMINUM DRAIN/ABLE LOUVER
–SCREEN TYPE
   1. BIRD SCREEN
   2. INSECT SCREEN

AECOM
1 FEDERAL STREET, 8TH FLOOR
BOSTON, MA 02110
617.723.1700
www.aecom.com

STATE OF MAINE
DEPARTMENT OF TRANSPORTATION

DATE

FED PIN NO: NA
WIN NO: 017163.02 & 017163.03

LICENSED ARCHITECT KARLA MICHELLE WENGLER No. 5292 STATE OF MAINE

SIGNATURE

ARCH. LIN. NUMBER ARC5292

DATE JANUARY 17, 2022

PROJECT INFORMATION

PROGRAM	–
PROJECT MANAGER	–
DESIGNER	AECOM
CONSULTANT	–
PROJECT RESIDENT	–
CONTRACTOR	–
PROJECT COMPLETION DATE	–

MAINE DEPARTMENT OF TRANSPORTATION
ACADIA GATEWAY FACILITY
INTERMODAL AND WELCOME CENTER

DOOR AND LOUVER SCHEDULES

SHEET NUMBER
A802

\\na.aecomnet.com\fs\AMER\Boston-USBOS01\DCS\Projects\TRN\60653001_MaineDOT_Acadia_Gateway\900_CAD_GIS\910_CAD\Sheet\A802.dwg Mar 08, 2022 - 4:09pm

GLAZING LEGEND	
G	PLATE GLASS
TG	TEMPERED GLASS
IG	INSULATED GLASS
ITG	INSULATED TEMPERED GLASS

DOOR AND GLAZING NOTES:

1. REFER TO SPECIFICATIONS FOR PLATE AND TEMPERED GLASS THICKNESS.
2. REFER TO SPECIFICATIONS FOR GLASS REQUIREMENTS PER CONDITION.
3. REFER TO DOOR HARDWARE MANUFACTURER'S REQUIREMENTS AND SPECIFICATIONS.

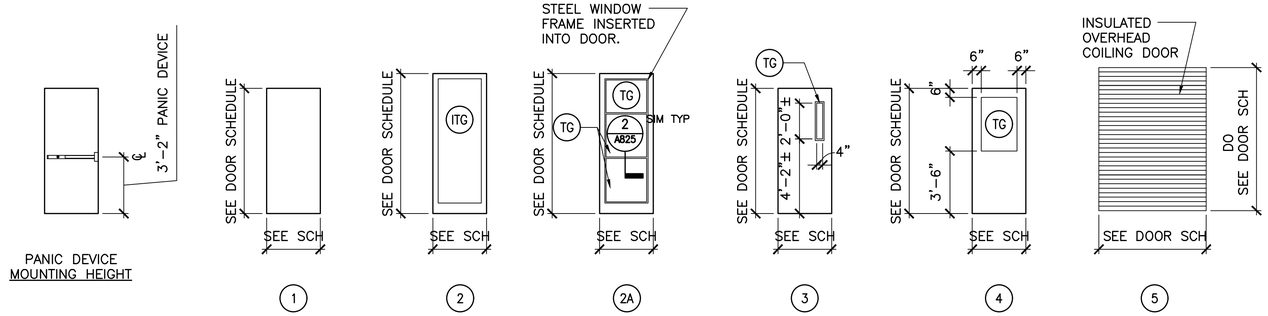

DOOR TYPES

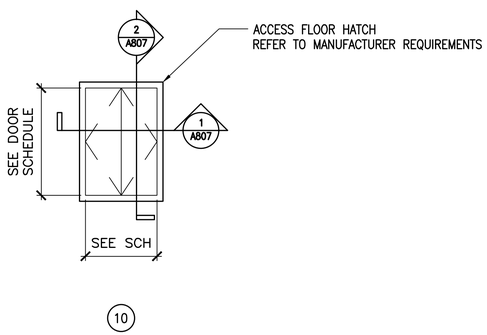

ACCESS FLOOR HATCH – DOOR AND FRAME TYPE

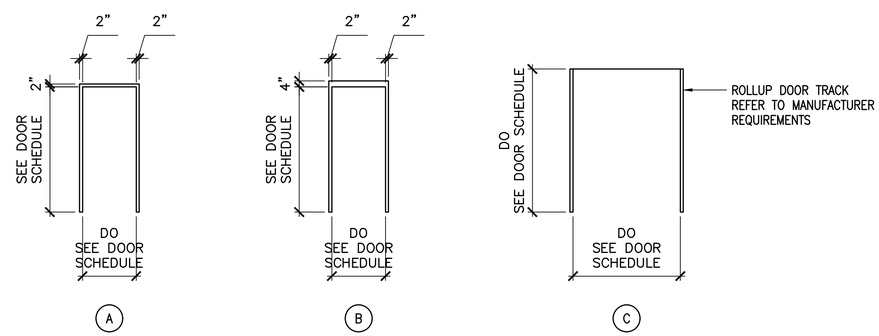

FRAME TYPES

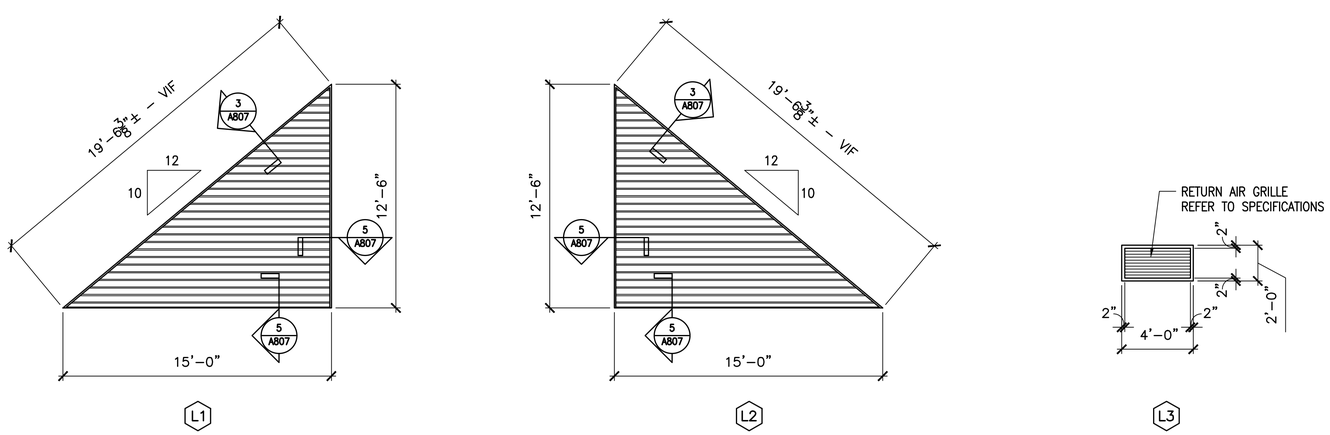

LOUVER / GRILLE TYPES

AECOM
1 FEDERAL STREET, 8TH FLOOR
BOSTON, MA 02110
617.723.1700
www.aecom.com

STATE OF MAINE
DEPARTMENT OF TRANSPORTATION

	DATE
FED PIN NO: NA	
WIN NO: 017163.02 & 017163.03	

LICENSED ARCHITECT KARYLA MICHELLE WENGLER No. 5292 STATE OF MAINE

SIGNATURE	
ARCH. LIN. NUMBER	ARC5292
DATE	JANUARY 17, 2022

PROJECT INFORMATION	
PROGRAM	–
PROJECT MANAGER	–
DESIGNER	AECOM
CONSULTANT	–
PROJECT RESIDENT	–
CONTRACTOR	–
PROJECT COMPLETION DATE	–

MAINE DEPARTMENT OF TRANSPORTATION
ACADIA GATEWAY FACILITY
INTERMODAL AND WELCOME CENTER

DOOR, DOOR FRAME AND AND LOUVER ELEVATIONS

SHEET NUMBER
A803

\\na.aecomnet.com\lfs\AMER\Boston-USBOS01\DCS\Projects\TRN\60653001_MaineDOT_Acadia_Gateway\900_CAD_GIS\910_CAD\Sheet\A803.dwg Jan 17, 2022 - 3:35pm

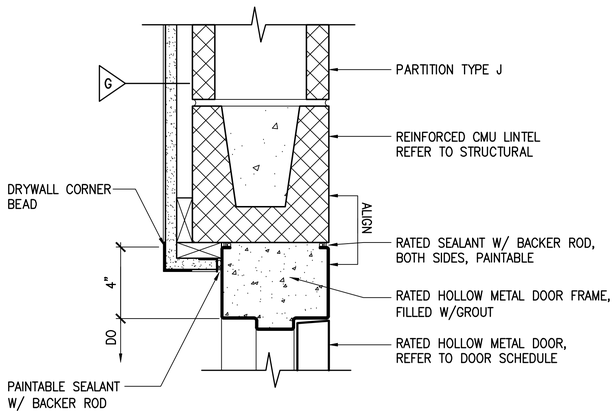

3 CMU DOOR HEAD DETAIL
3"=1'-0"

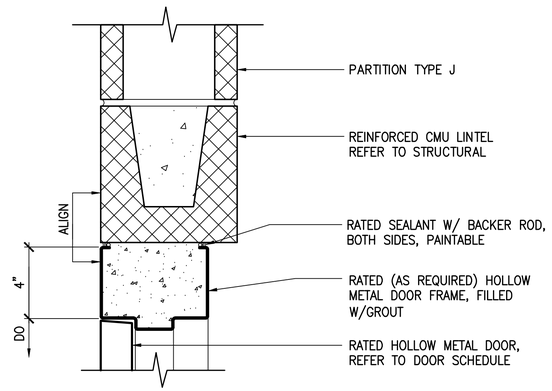

2 CMU DOOR HEAD DETAIL
3"=1'-0"

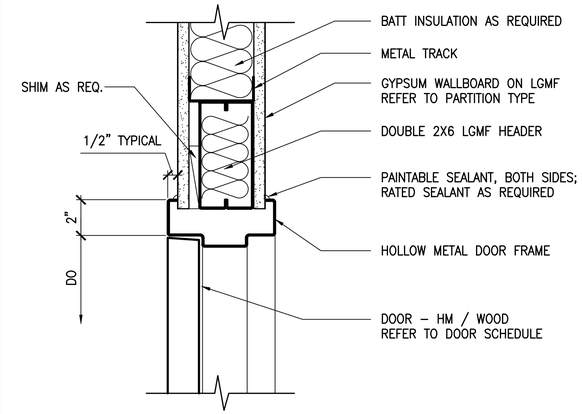

1 DOOR HEAD DETAIL
3"=1'-0"

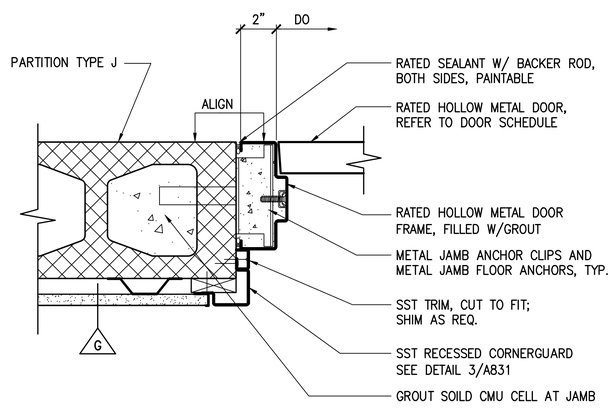

6 CMU DOOR JAMB DETAIL
3"=1'-0"

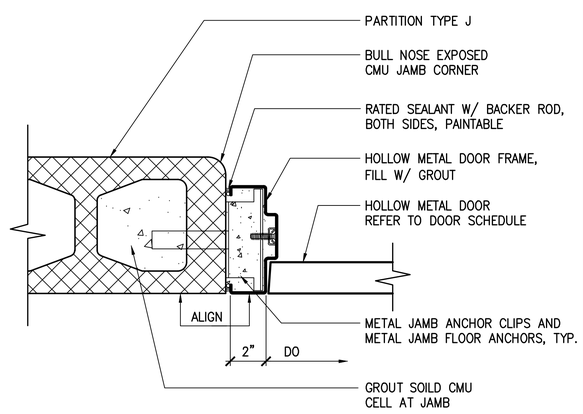

5 CMU DOOR JAMB DETAIL
3"=1'-0"

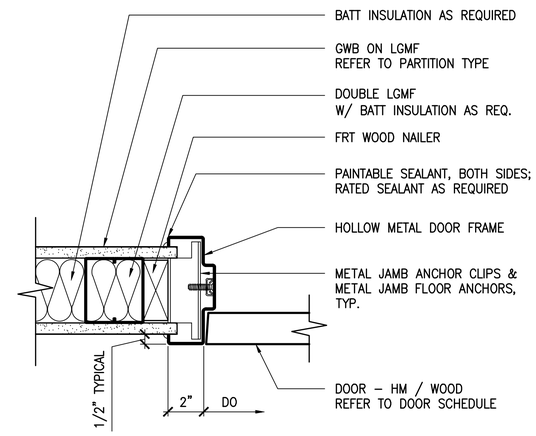

4 DOOR JAMB DETAIL
3"=1'-0"

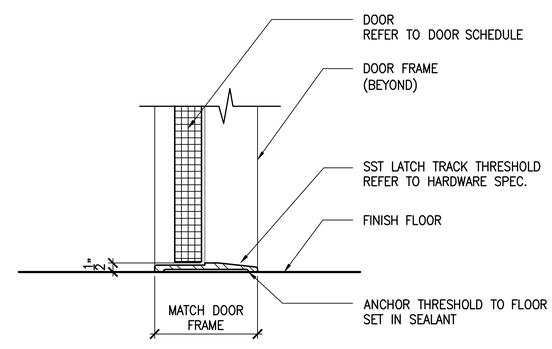

7 THRESHOLD DETAIL
3"=1'-0"

AECOM
1 FEDERAL STREET, 8TH FLOOR
BOSTON, MA 02110
617.723.1700
www.aecom.com

STATE OF MAINE
DEPARTMENT OF TRANSPORTATION

	DATE

FED PIN NO: NA
WIN NO: 017163.02 & 017163.03

LICENSED ARCHITECT KAYLA MICHELLE WENGLER No. 5292 STATE OF MAINE

PROJECT INFORMATION	
PROGRAM	–
PROJECT MANAGER	–
DESIGNER	AECOM
CONSULTANT	–
PROJECT RESIDENT	–
CONTRACTOR	–
PROJECT COMPLETION DATE	–

SIGNATURE
ARCH. LIN. NUMBER ARC5292
DATE JANUARY 17, 2022

MAINE DEPARTMENT OF TRANSPORTATION
ACADIA GATEWAY FACILITY
INTERMODAL AND WELCOME CENTER

DOOR DETAILS I

SHEET NUMBER
A804

\\na.aecomnet.com\lfs\AMER\Boston-USBOS01\DCS\Projects\TRN\60653001_MaineDOT_Acadia_Gateway\900_CAD_GIS\910_CAD\Sheet\A804.dwg Jan 17, 2022 - 3:35pm

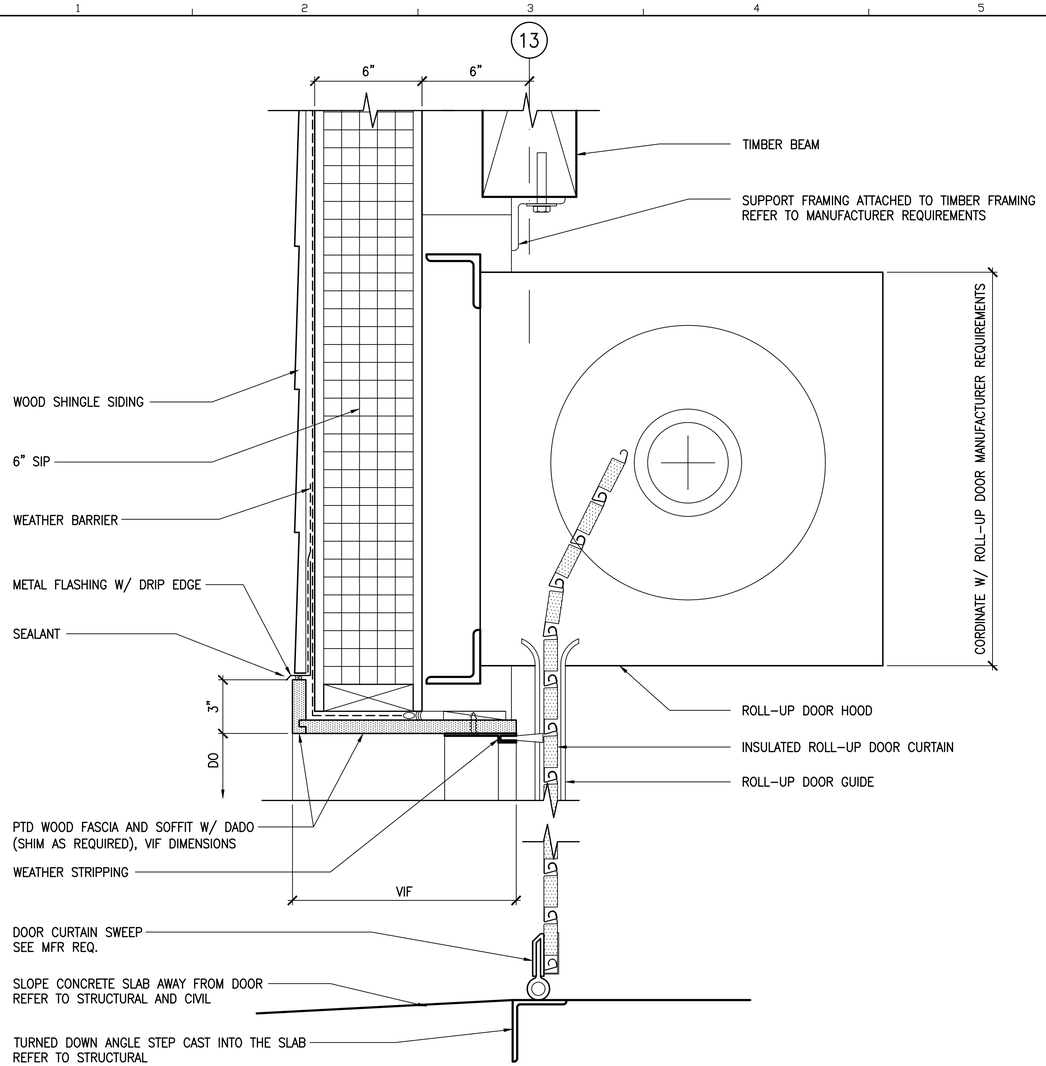

2 ROLL-UP DOOR HEAD / THRESHOLD DETAIL
3"=1'-0"

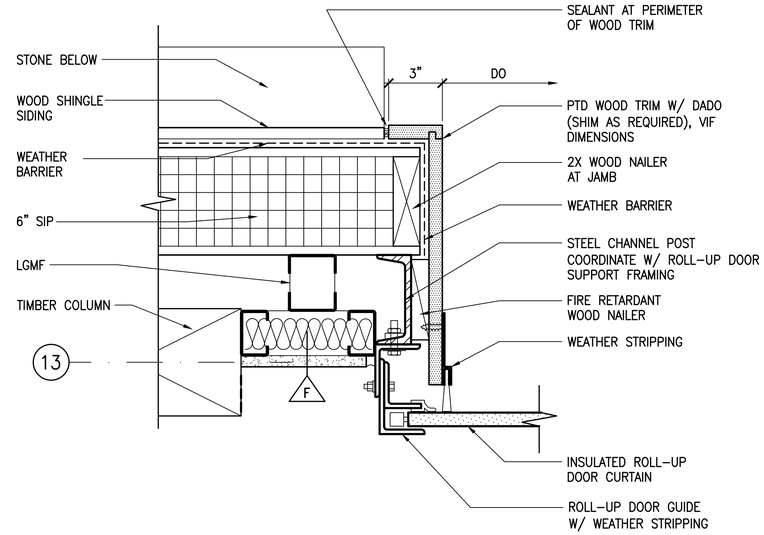

1 ROLL-UP DOOR JAMB DETAIL
3"=1'-0"

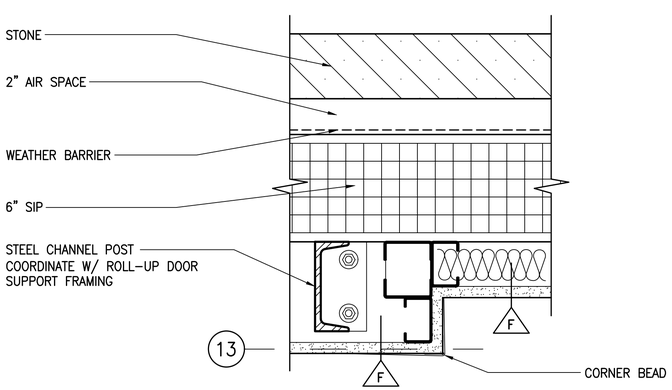

3 ROLL-UP DOOR JAMB TRANSITION DETAIL
3"=1'-0"

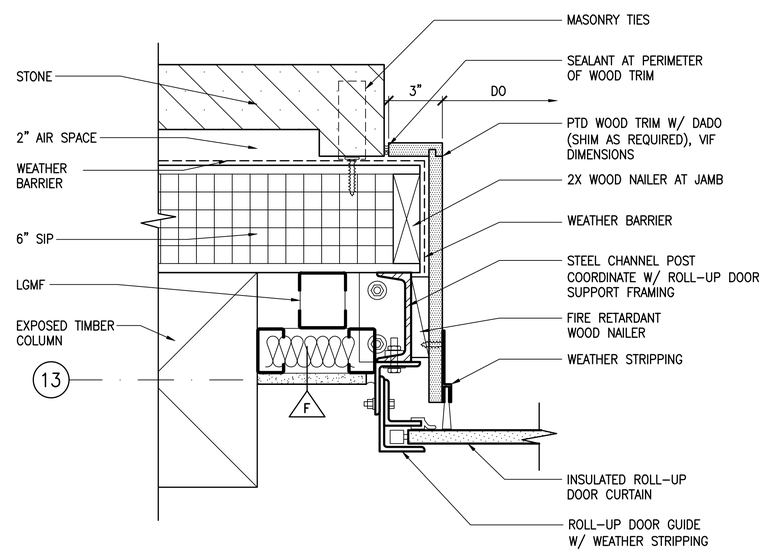

4 ROLL-UP DOOR JAMB DETAIL AT STONE
3"=1'-0"

AECOM
1 FEDERAL STREET, 8TH FLOOR
BOSTON, MA 02110
617.723.1700
www.aecom.com

STATE OF MAINE
DEPARTMENT OF TRANSPORTATION

DATE	
FED PIN NO: NA	
WIN NO: 017163.02 & 017163.03	

LICENSED ARCHITECT KATLA MICHELLE WENGLER No. 5292 STATE OF MAINE

SIGNATURE

ARCH. LIN. NUMBER ARC5292

DATE JANUARY 17, 2022

PROJECT INFORMATION	
PROGRAM	-
PROJECT MANAGER	-
DESIGNER	AECOM
CONSULTANT	-
PROJECT RESIDENT	-
CONTRACTOR	-
PROJECT COMPLETION DATE	-

MAINE DEPARTMENT OF TRANSPORTATION
ACADIA GATEWAY FACILITY
INTERMODAL AND WELCOME CENTER

DOOR DETAILS II

SHEET NUMBER
A805

\\na.aecomnet.com\lfs\AMER\Boston-USBOS01\DCS\Projects\TRN\60653001_MaineDOT_Acadia_Gateway\900_CAD_GIS\910_CAD\Sheet\A805.dwg Jan 17, 2022 - 3:36pm

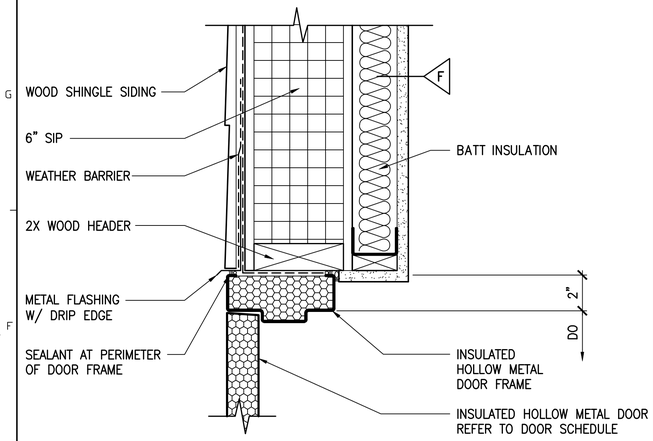

3 DOOR HEAD DETAIL
3"=1'-0"

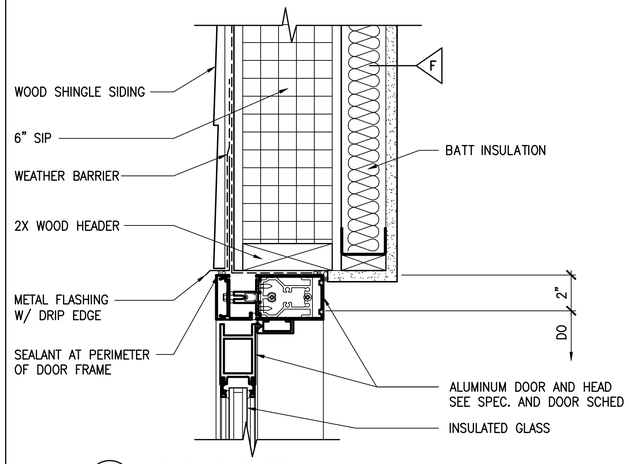

2 DOOR HEAD DETAIL
3"=1'-0"

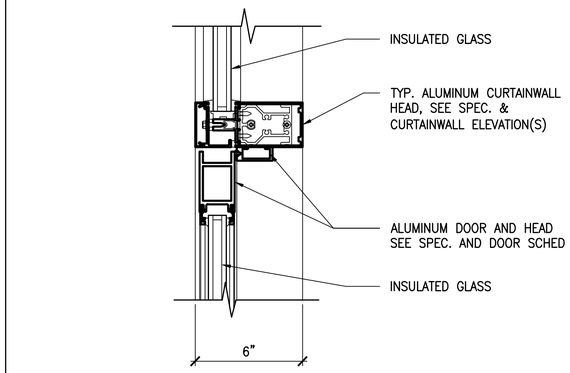

1 CURTAINWALL DOOR HEAD DETAIL
3"=1'-0"

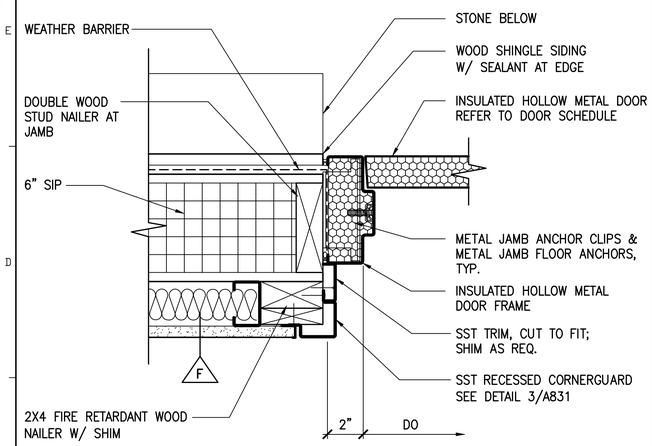

6 DOOR JAMB DETAIL
3"=1'-0"

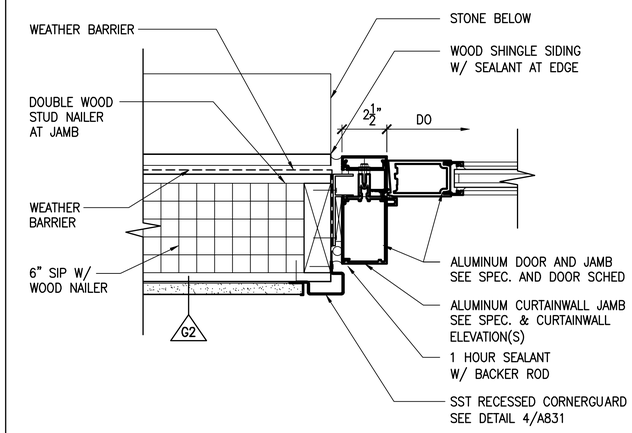

5 DOOR JAMB DETAIL
3"=1'-0"

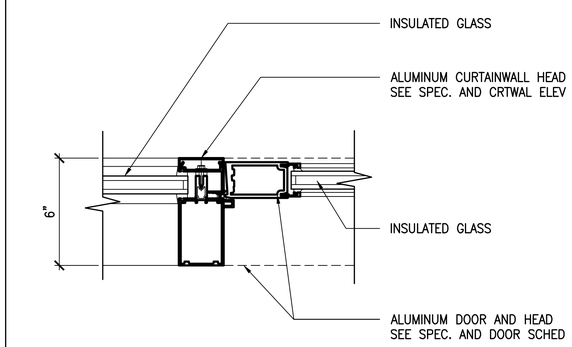

4 CURTAINWALL DOOR JAMB DETAIL
3"=1'-0"

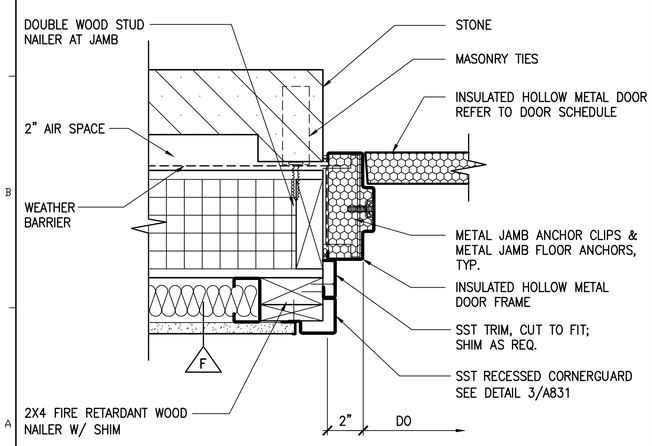

9 DOOR JAMB DETAIL AT STONE
3"=1'-0"

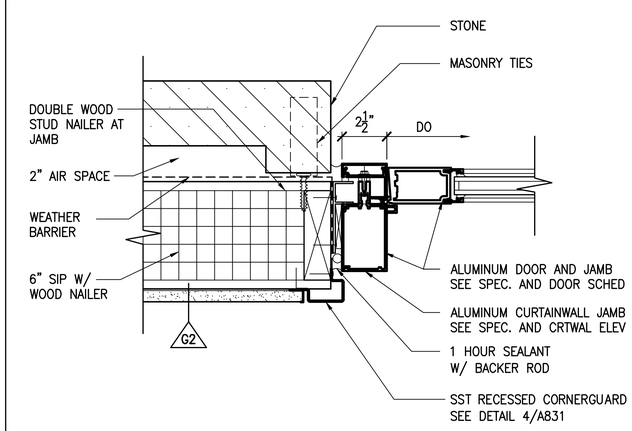

8 DOOR JAMB DETAIL AT STONE
3"=1'-0"

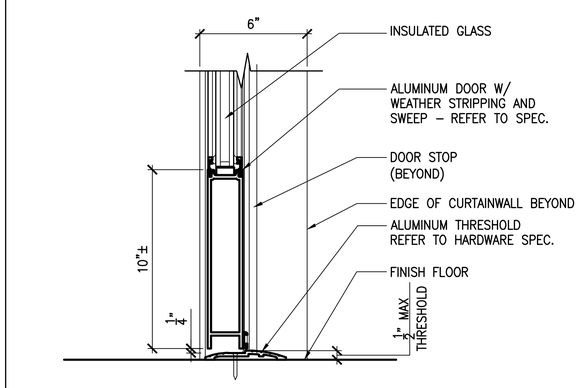

7 THRESHOLD AT ALUMINUM DOOR DETAIL
3"=1'-0"

AECOM
1 FEDERAL STREET, 8TH FLOOR
BOSTON, MA 02110
617.723.1700
www.aecom.com

STATE OF MAINE
DEPARTMENT OF TRANSPORTATION

DATE

FED P/N NO: NA
WIN NO: 017163.02 & 017163.03

LICENSED ARCHITECT KAYLA MICHELLE WENGLER No. 5292 STATE OF MAINE

SIGNATURE
ARCH. LIN. NUMBER ARC5292
DATE JANUARY 17, 2022

PROJECT INFORMATION	
PROGRAM	–
PROJECT MANAGER	–
DESIGNER	AECOM
CONSULTANT	–
PROJECT RESIDENT	–
CONTRACTOR	–
PROJECT COMPLETION DATE	–

MAINE DEPARTMENT OF TRANSPORTATION
ACADIA GATEWAY FACILITY
INTERMODAL AND WELCOME CENTER

DOOR DETAILS III

SHEET NUMBER
A806

\\na.aecomnet.com\lfs\AMER\Boston-USBOS01\DCS\Projects\TRN\60653001_MaineDOT_Acadia_Gateway\900_CAD_GIS\910_CAD\Sheet\A806.dwg Jan 17, 2022 - 3:36pm

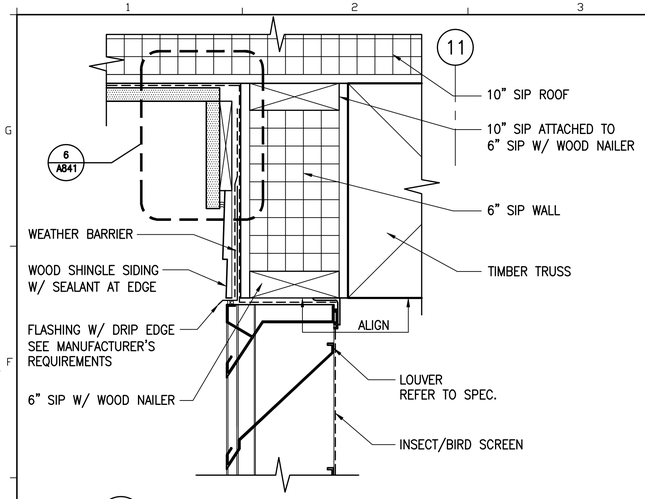

3 LOUVER HEAD DETAIL
3"=1'-0"

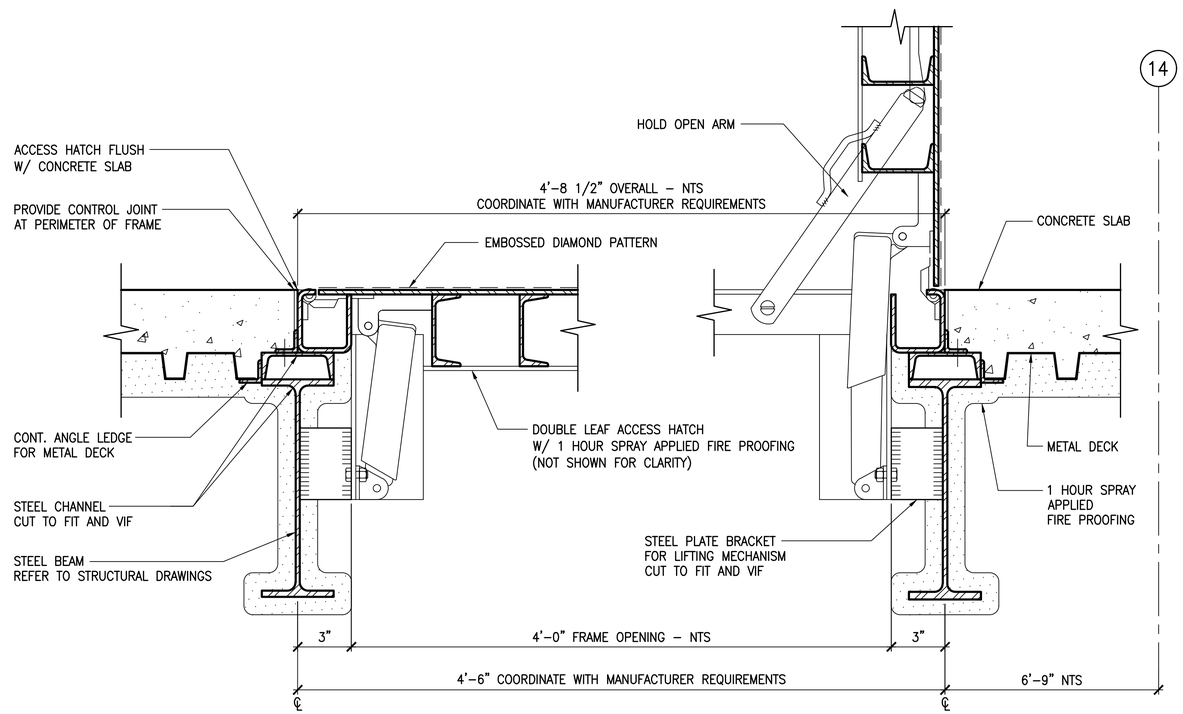

1 ACCESS FLOOR HATCH DETAIL
3"=1'-0"

REFER TO STRUCTURAL DRAWINGS

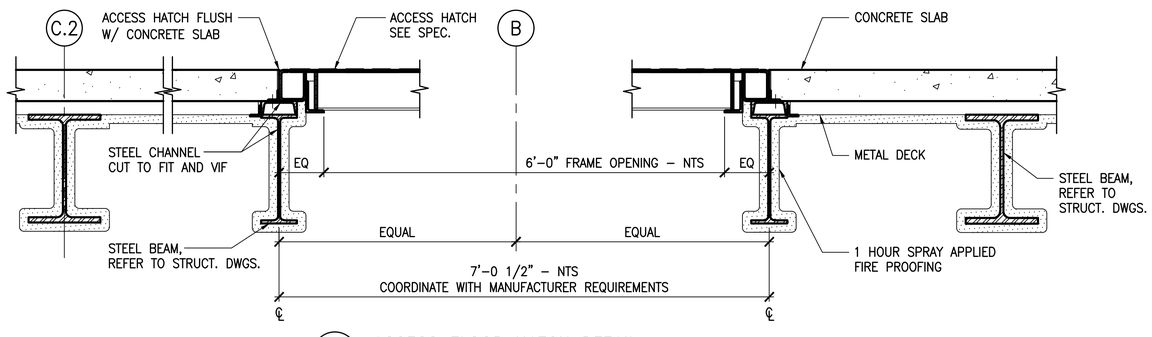

2 ACCESS FLOOR HATCH DETAIL
1 1/2"=1'-0"

REFER TO STRUCTURAL DRAWINGS

4 NOT USED
3"=1'-0"

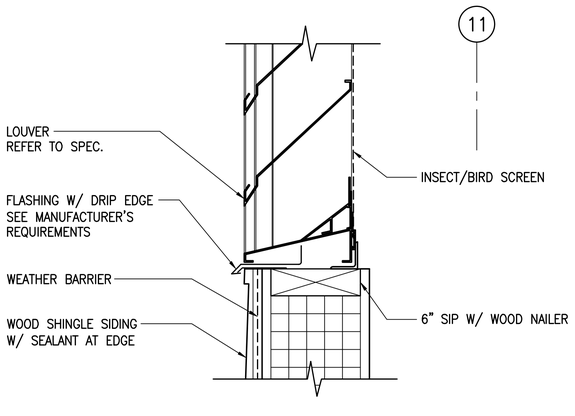

5 LOUVER SILL DETAIL – JAMB SIMILAR
3"=1'-0"

AECOM
1 FEDERAL STREET, 8TH FLOOR
BOSTON, MA 02110
617.723.1700
www.aecom.com

STATE OF MAINE
DEPARTMENT OF TRANSPORTATION

DATE

FED PIN NO: NA
WIN NO: 017163.02 & 017163.03

LICENSED ARCHITECT KATYA MICHELLE WENGLER No. 5292 STATE OF MAINE

SIGNATURE
ARCH. LIN. NUMBER ARC5292
DATE JANUARY 17, 2022

PROJECT	INFORMATION
PROGRAM	–
PROJECT MANAGER	–
DESIGNER	AECOM
CONSULTANT	–
PROJECT RESIDENT	–
CONTRACTOR	–
PROJECT COMPLETION DATE	–

MAINE DEPARTMENT OF TRANSPORTATION
ACADIA GATEWAY FACILITY
INTERMODAL AND WELCOME CENTER
LOUVER AND HATCH DETAILS

SHEET NUMBER
A807

\\na.aecomnet.com\Ifs\AMER\Boston-USBOS01\DCS\Projects\TRN\60653001_MaineDOT_Acadia_Gateway\900_CAD_GIS\910_CAD\Sheet\A807.dwg Jan 17, 2022 - 3:37pm

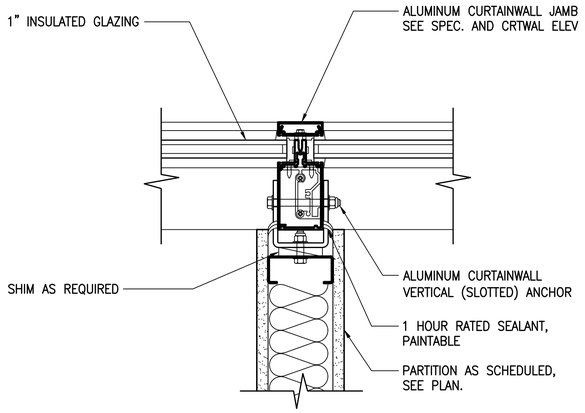

3 CURTAINWALL JAMB DETAIL
3"=1'-0"

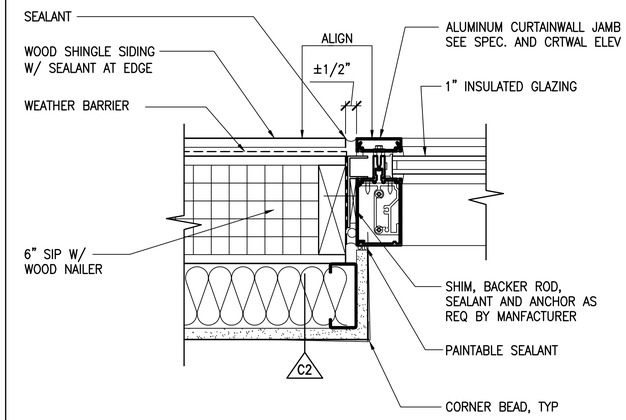

2 CURTAINWALL JAMB DETAIL
3"=1'-0"

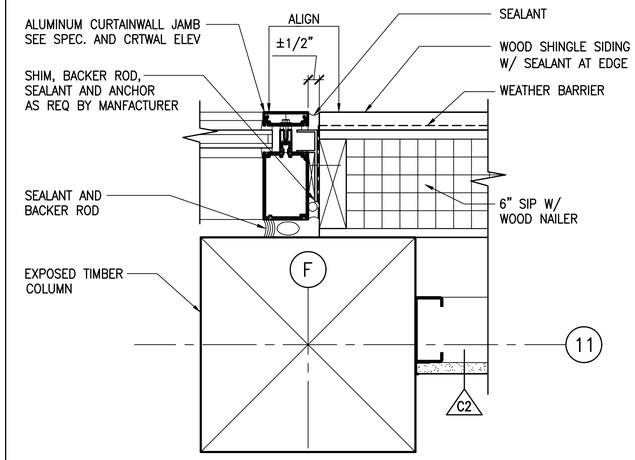

1 CURTAINWALL JAMB DETAIL
3"=1'-0"

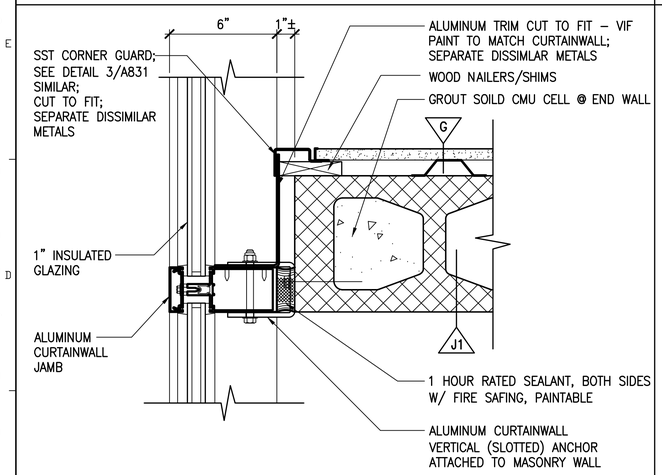

6 CURTAINWALL JAMB DETAIL
3"=1'-0"

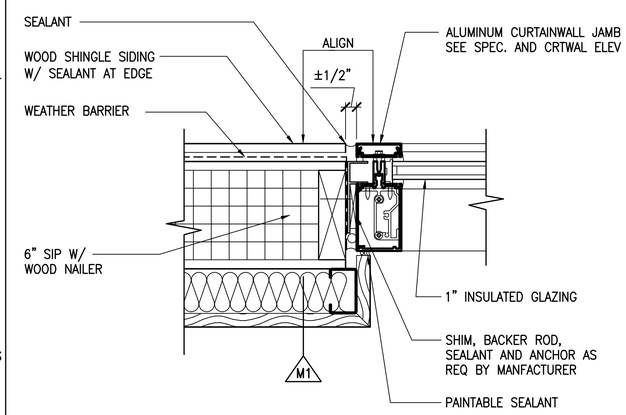

5 CURTAINWALL JAMB DETAIL
3"=1'-0"

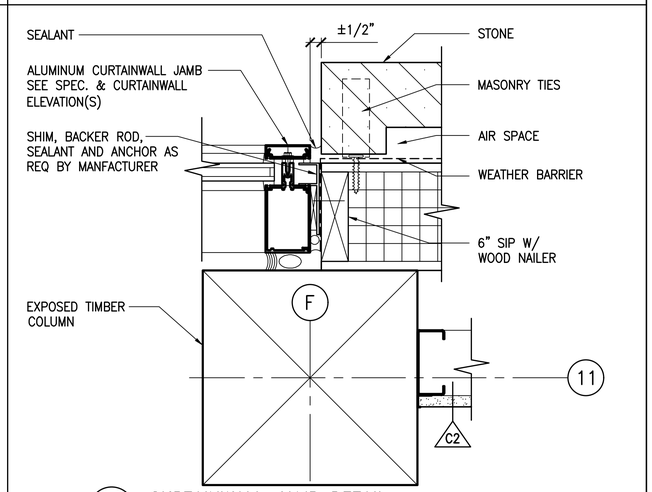

4 CURTAINWALL JAMB DETAIL
3"=1'-0"

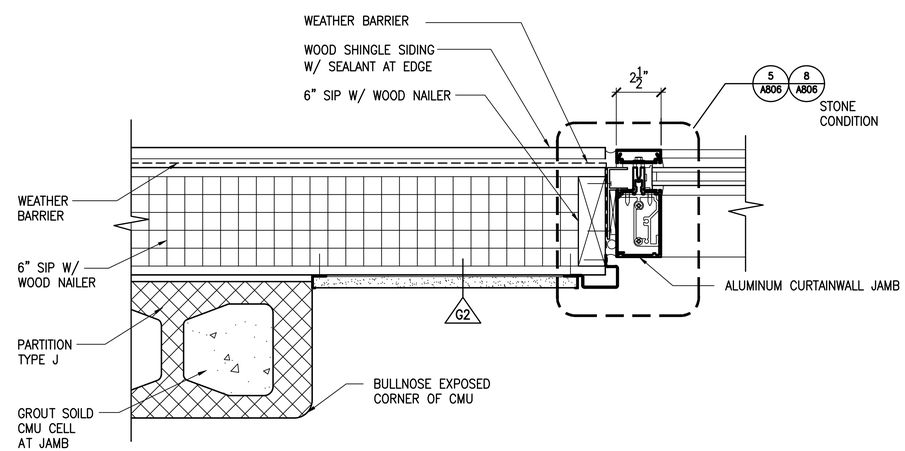

7 CURTAINWALL JAMB DETAIL
3"=1'-0"

AECOM
1 FEDERAL STREET, 8TH FLOOR
BOSTON, MA 02110
617.723.1700
www.aecom.com

STATE OF MAINE
DEPARTMENT OF TRANSPORTATION

DATE

FED P/N NO: NA
WIN NO: 017163.02 & 017163.03

LICENSED ARCHITECT KAYLA MICHELLE WENGLER No. 5292 STATE OF MAINE

SIGNATURE
ARCH. LIN. NUMBER ARC5292
DATE JANUARY 17, 2022

PROJECT INFORMATION	
PROGRAM	–
PROJECT MANAGER	–
DESIGNER	AECOM
CONSULTANT	–
PROJECT RESIDENT	–
CONTRACTOR	–
PROJECT COMPLETION DATE	–

MAINE DEPARTMENT OF TRANSPORTATION
ACADIA GATEWAY FACILITY
INTERMODAL AND WELCOME CENTER

PLAN DETAILS I

SHEET NUMBER
A810

\\na.aecomnet.com\lfs\AMER\Boston-USBOS01\DCS\Projects\TRN\60653001_MaineDOT_Acadia_Gateway\900_CAD_GIS\910_CAD\Sheet\A810.dwg Jan 17, 2022 - 3:37pm

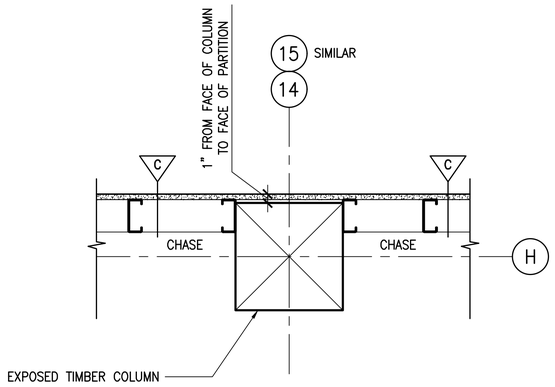

3 PLAN DETAIL
1 1/2"=1'-0"

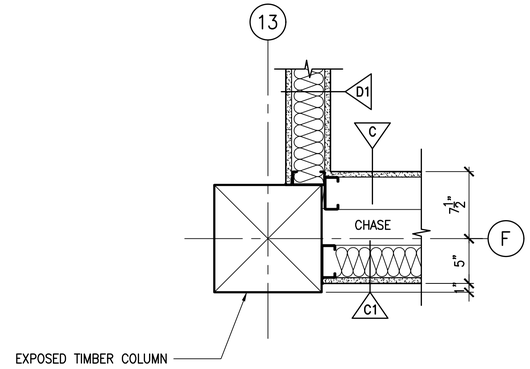

2 PLAN DETAIL
1 1/2"=1'-0"

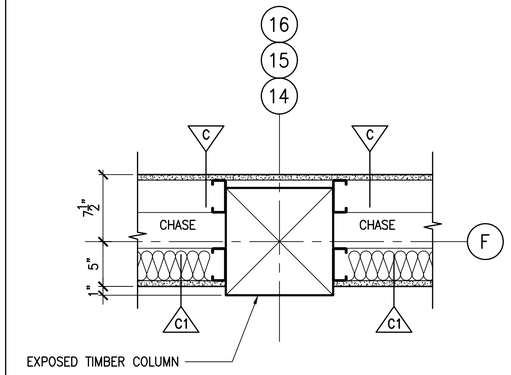

1 PLAN DETAIL
1 1/2"=1'-0"

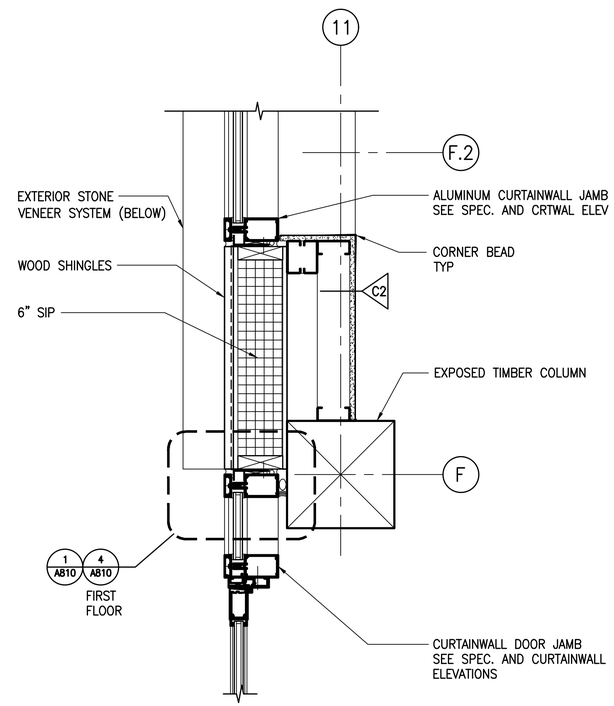

6 PLAN DETAIL
1 1/2"=1'-0"

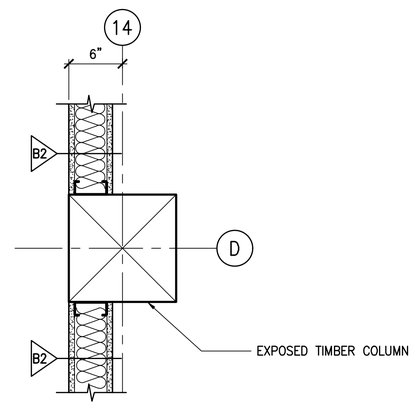

5 PLAN DETAIL
1 1/2"=1'-0"

4 NOT USED
1 1/2"=1'-0"

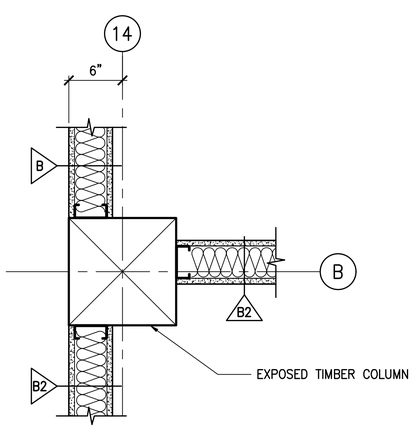

8 PLAN DETAIL
1 1/2"=1'-0"

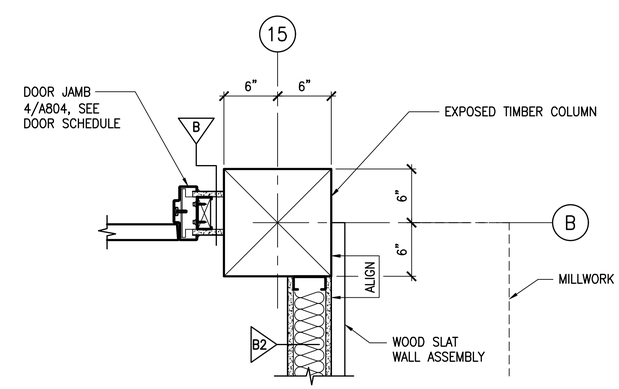

7 PLAN DETAIL
1 1/2"=1'-0"

AECOM
1 FEDERAL STREET, 8TH FLOOR
BOSTON, MA 02110
617.723.1700
www.aecom.com

STATE OF MAINE
DEPARTMENT OF TRANSPORTATION

DATE

FED PIN NO: NA

WIN NO: 017163.02 & 017163.03

LICENSED ARCHITECT KATYA MICHELLE WENGLER No. 5292 STATE OF MAINE

SIGNATURE

ARCH. LIN. NUMBER ARC5292

DATE JANUARY 17, 2022

PROJECT INFORMATION	
PROGRAM	–
PROJECT MANAGER	–
DESIGNER	AECOM
CONSULTANT	–
PROJECT RESIDENT	–
CONTRACTOR	–
PROJECT COMPLETION DATE	–

MAINE DEPARTMENT OF TRANSPORTATION
ACADIA GATEWAY FACILITY
INTERMODAL AND WELCOME CENTER

PLAN DETAILS II

SHEET NUMBER
A811

\\na.aecomnet.com\lfs\AMER\Boston-USBOS01\DCS\Projects\TRN\60653001_MaineDOT_Acadia_Gateway\900_CAD_GIS\910_CAD\Sheet\A811.dwg Jan 17, 2022 - 3:38pm

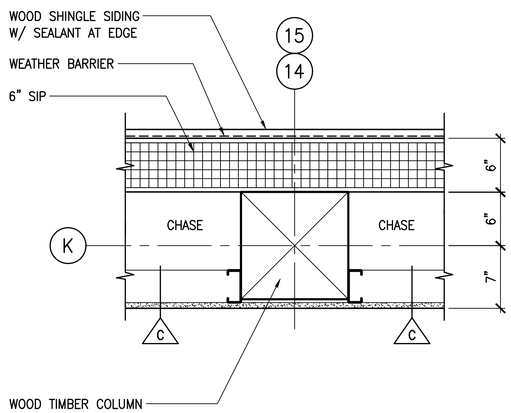

2 PLAN DETAIL
1 1/2"=1'-0"

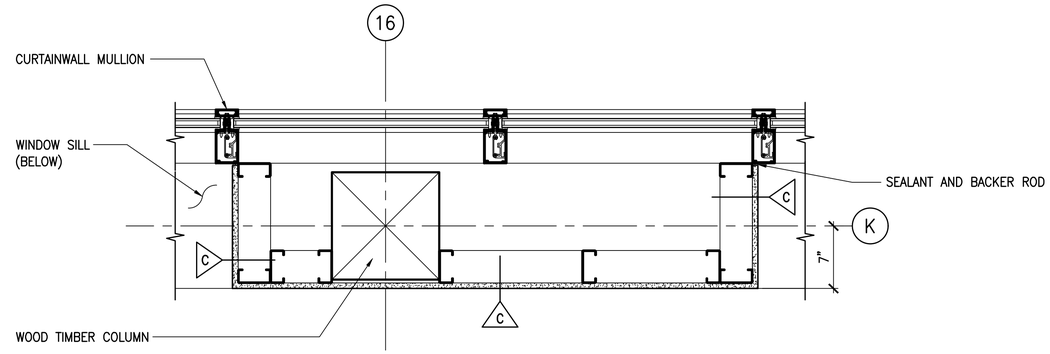

1 PLAN DETAIL
1 1/2"=1'-0"

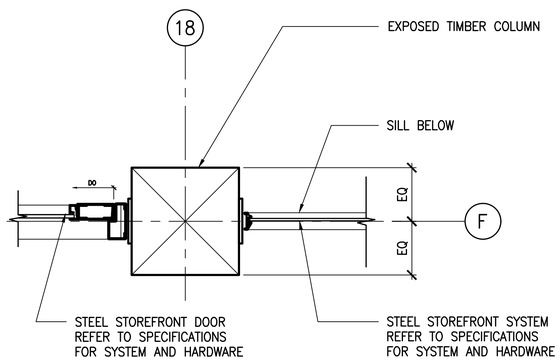

5 PLAN DETAIL
1 1/2"=1'-0"

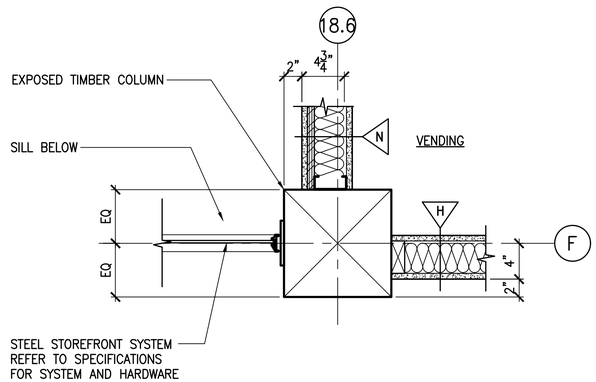

4 PLAN DETAIL
1 1/2"=1'-0"

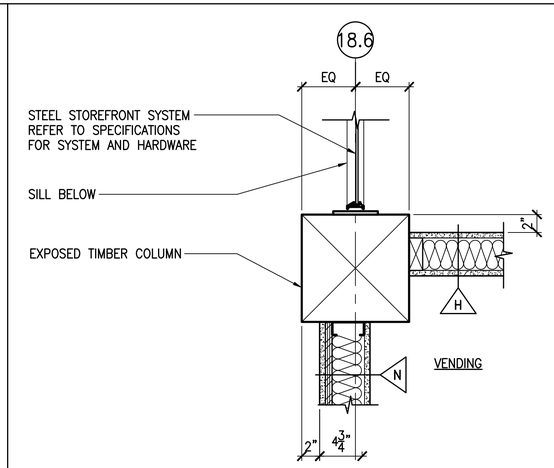

3 PLAN DETAIL
1 1/2"=1'-0"

AECOM
1 FEDERAL STREET, 8TH FLOOR
BOSTON, MA 02110
617.723.1700
www.aecom.com

STATE OF MAINE
DEPARTMENT OF TRANSPORTATION

	DATE

FED PIN NO: NA
WIN NO: 017163.02 & 017163.03

LICENSED ARCHITECT KAYLA MICHELLE WENGLER No. 5292 STATE OF MAINE

PROJECT	INFORMATION
PROGRAM	–
PROJECT MANAGER	–
DESIGNER	AECOM
CONSULTANT	–
PROJECT RESIDENT	–
CONTRACTOR	–
PROJECT COMPLETION DATE	–

SIGNATURE
ARCH. LIN. NUMBER ARC5292
DATE JANUARY 17, 2022

MAINE DEPARTMENT OF TRANSPORTATION
ACADIA GATEWAY FACILITY
INTERMODAL AND WELCOME CENTER
PLAN DETAILS III

SHEET NUMBER
A812

\\na.aecomnet.com\lfs\AMER\Boston-USBOS01\DCS\Projects\TRN\60653001_MaineDOT_Acadia_Gateway\900_CAD_GIS\910_CAD\Sheet\A812.dwg Jan 17, 2022 - 3:38pm

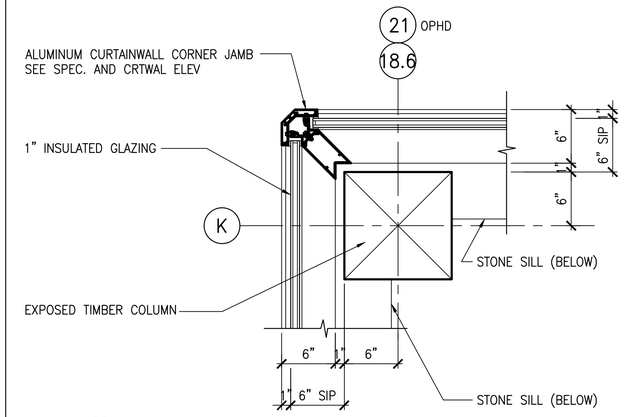

2 PLAN DETAIL
1 1/2"=1'-0"

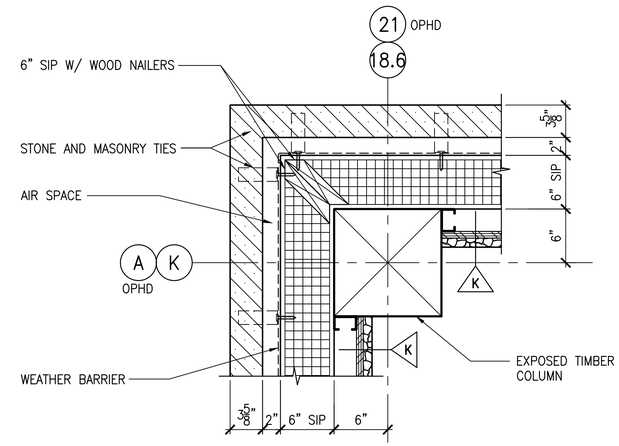

1 PLAN DETAIL
1 1/2"=1'-0"

3 NOT USED
1 1/2"=1'-0"

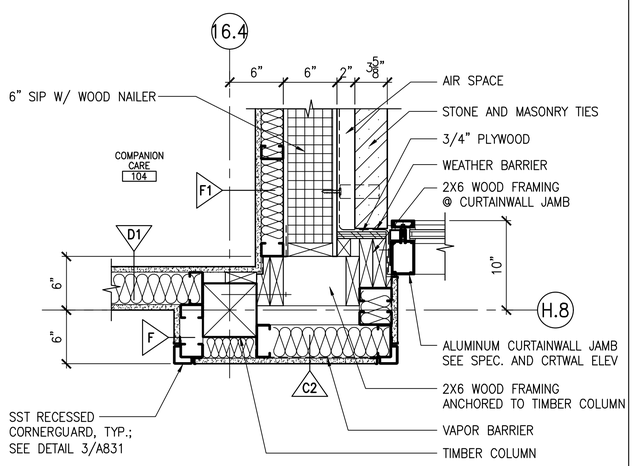

6 PLAN DETAIL @ STONE BASE
1 1/2"=1'-0"

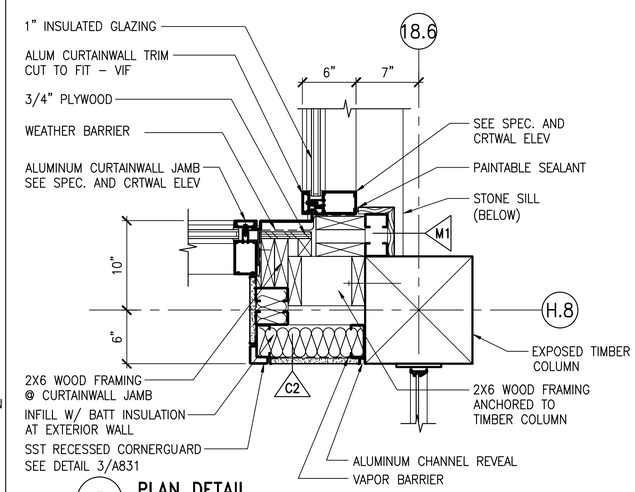

5 PLAN DETAIL
1 1/2"=1'-0"

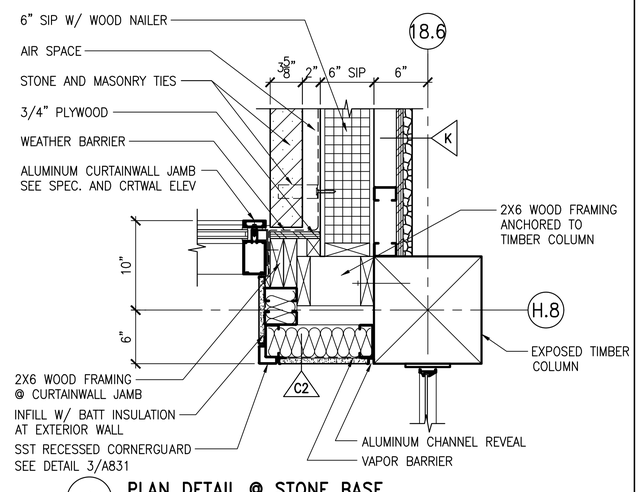

4 PLAN DETAIL @ STONE BASE
1 1/2"=1'-0"

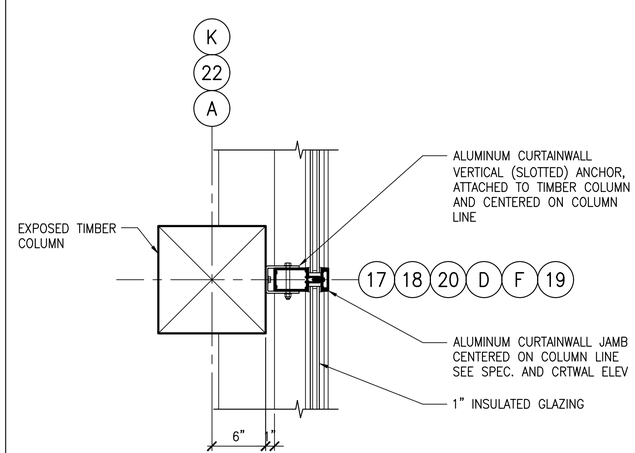

8 PLAN DETAIL
1 1/2"=1'-0"

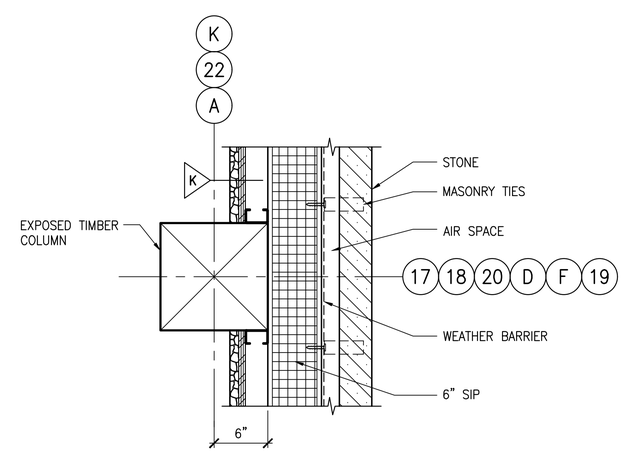

7 PLAN DETAIL
1 1/2"=1'-0"

AECOM
1 FEDERAL STREET, 8TH FLOOR
BOSTON, MA 02110
617.723.1700
www.aecom.com

STATE OF MAINE
DEPARTMENT OF TRANSPORTATION

	DATE

FED PIN NO: NA
WIN NO: 017163.02 & 017163.03

LICENSED ARCHITECT
KAYLA MICHELLE WENGLER
No. 5292
STATE OF MAINE

SIGNATURE	
ARCH. LIN. NUMBER	ARC5292
DATE	JANUARY 17, 2022

PROJECT INFORMATION	
PROGRAM	–
PROJECT MANAGER	–
DESIGNER	AECOM
CONSULTANT	–
PROJECT RESIDENT	–
CONTRACTOR	–
PROJECT COMPLETION DATE	–

MAINE DEPARTMENT OF TRANSPORTATION
ACADIA GATEWAY FACILITY
INTERMODAL AND WELCOME CENTER

PLAN DETAILS IV

SHEET NUMBER
A813

\\na.aecomnet.com\lfs\AMER\Boston-USBOS01\DCS\Projects\TRN\60653001_MaineDOT_Acadia_Gateway\900_CAD_GIS\910_CAD\Sheet\A813.dwg Jan 17, 2022 - 4:32pm

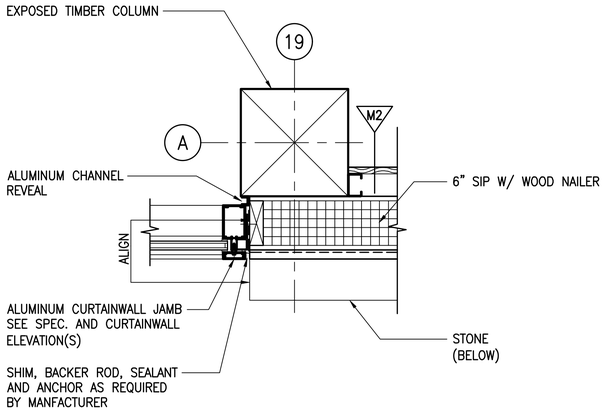

3 PLAN DETAIL
1 1/2"=1'-0"
0 6" 1'

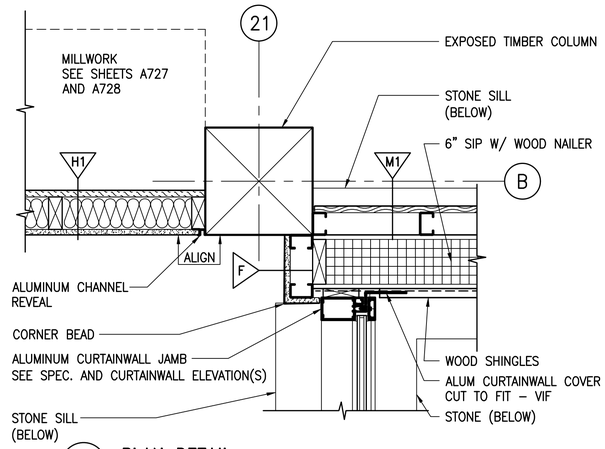

2 PLAN DETAIL
1 1/2"=1'-0"
0 6" 1'

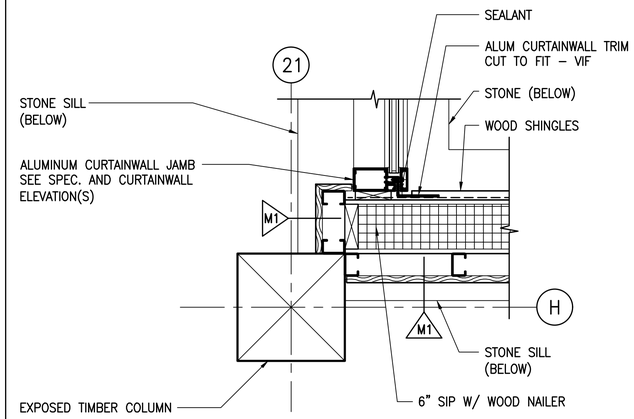

1 PLAN DETAIL
1 1/2"=1'-0"
0 6" 1'

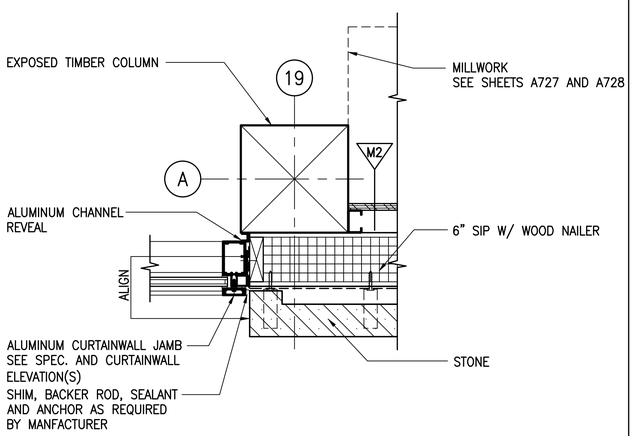

6 PLAN DETAIL
1 1/2"=1'-0"
0 6" 1'

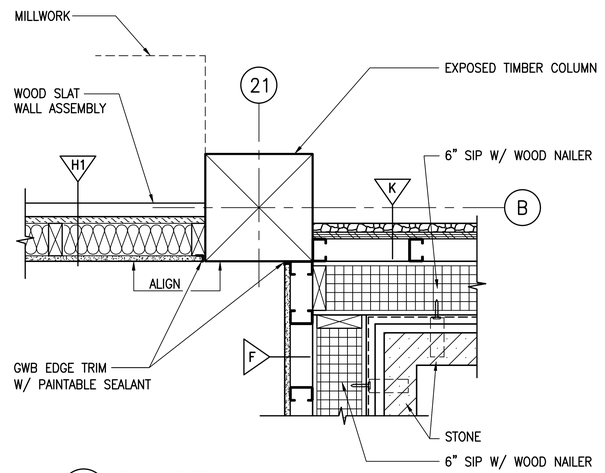

5 PLAN DETAIL @ STONE
1 1/2"=1'-0"
0 6" 1'

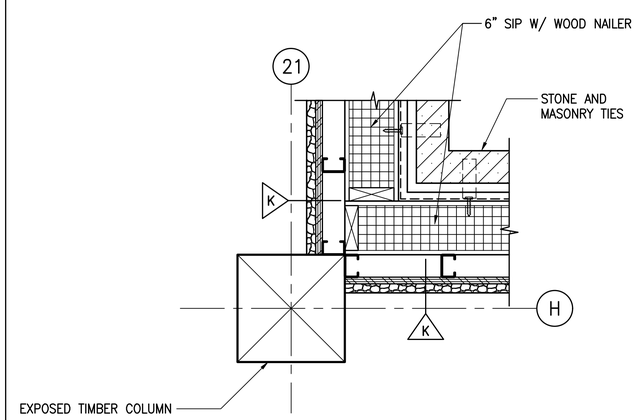

4 PLAN DETAIL
1 1/2"=1'-0"
0 6" 1'

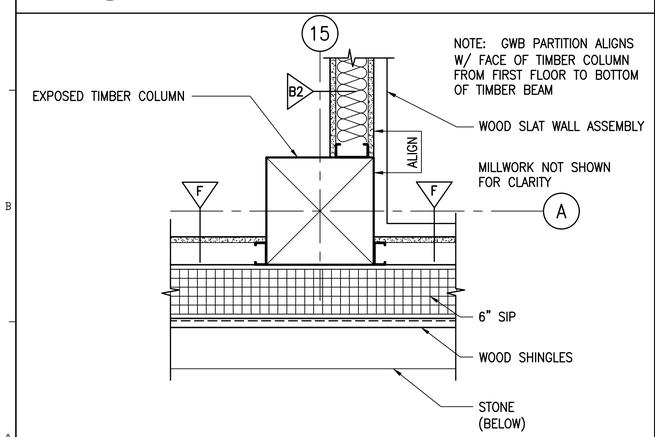

9 PLAN DETAIL
1 1/2"=1'-0"
0 6" 1'

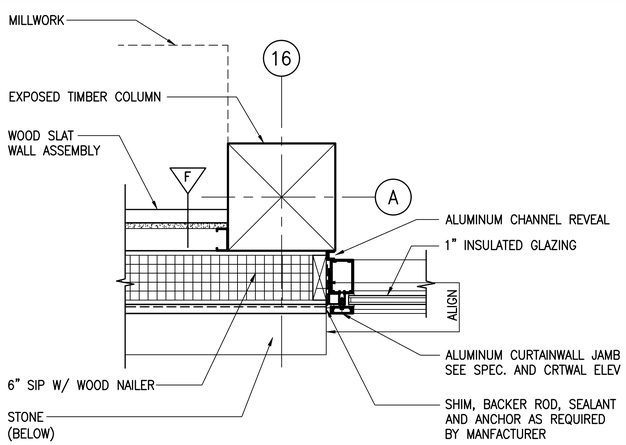

8 PLAN DETAIL
1 1/2"=1'-0"
0 6" 1'

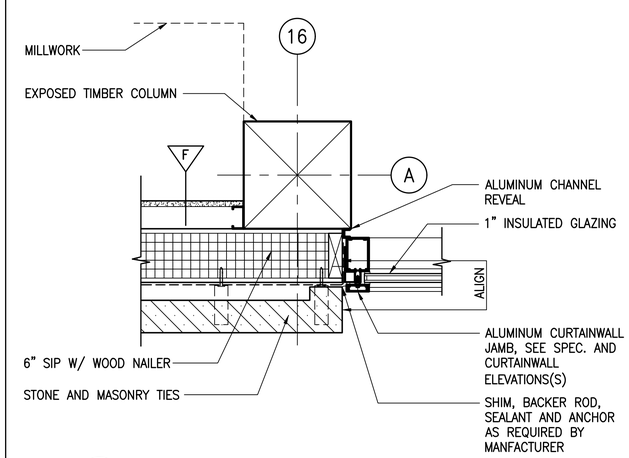

7 PLAN DETAIL
1 1/2"=1'-0"
0 6" 1'

AECOM
1 FEDERAL STREET, 8TH FLOOR
BOSTON, MA 02110
617.723.1700
www.aecom.com

STATE OF MAINE
DEPARTMENT OF TRANSPORTATION

DATE

FED PIN NO: NA
WIN NO: 017163.02 & 017163.03

LICENSED ARCHITECT KATYA MICHELLE WENGLER No. 5292 STATE OF MAINE

SIGNATURE
ARCH. LIN. NUMBER ARC5292
DATE JANUARY 17, 2022

PROJECT INFORMATION	
PROGRAM	–
PROJECT MANAGER	–
DESIGNER	AECOM
CONSULTANT	–
PROJECT RESIDENT	–
CONTRACTOR	–
PROJECT COMPLETION DATE	–

MAINE DEPARTMENT OF TRANSPORTATION
ACADIA GATEWAY FACILITY
INTERMODAL AND WELCOME CENTER

PLAN DETAILS V

SHEET NUMBER
A814

\\na.aecomnet.com\lfs\AMER\Boston-USBOS01\DCS\Projects\TRN\60653001_MaineDOT_Acadia_Gateway\900_CAD_GIS\910_CAD\Sheet\A814.dwg Jan 17, 2022 - 3:39pm

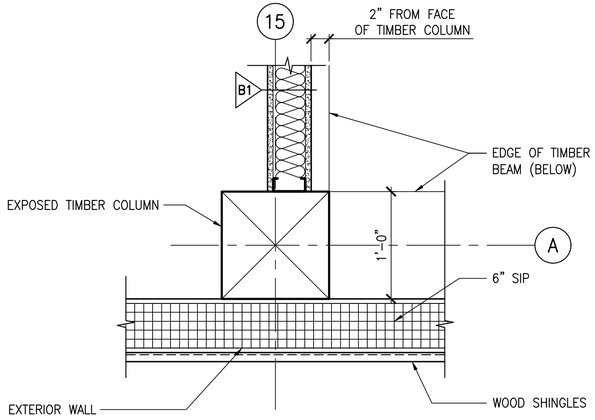

3 PLAN DETAIL
1 1/2"=1'-0"

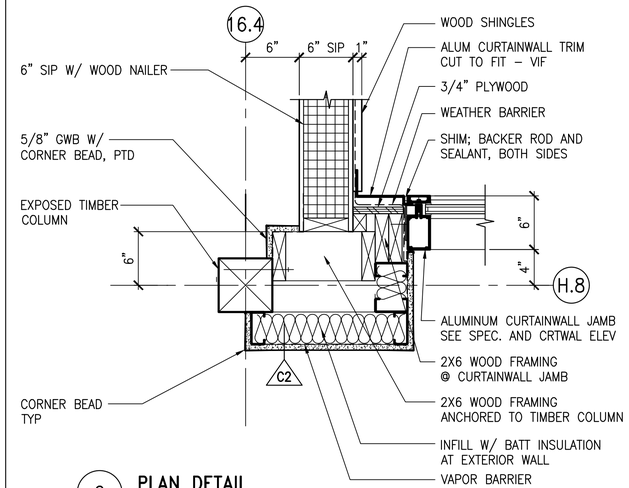

2 PLAN DETAIL
1 1/2"=1'-0"

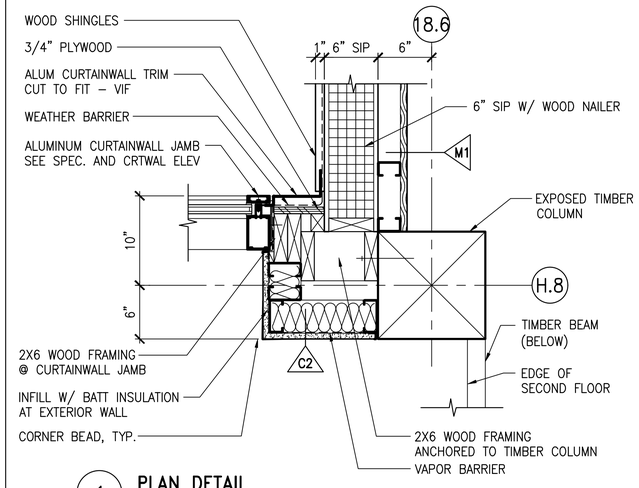

1 PLAN DETAIL
1 1/2"=1'-0"

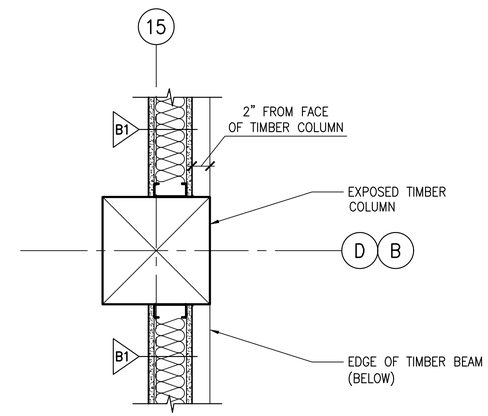

4 PLAN DETAIL
1 1/2"=1'-0"

AECOM
1 FEDERAL STREET, 8TH FLOOR
BOSTON, MA 02110
617.723.1700
www.aecom.com

STATE OF MAINE
DEPARTMENT OF TRANSPORTATION

DATE

FED PIN NO: NA
WIN NO: 017163.02 & 017163.03

LICENSED ARCHITECT KATYA MICHELLE WENGLER No. 5292 STATE OF MAINE

SIGNATURE

ARCH. LIN. NUMBER ARC5292

DATE JANUARY 17, 2022

PROJECT INFORMATION	
PROGRAM	–
PROJECT MANAGER	–
DESIGNER	AECOM
CONSULTANT	–
PROJECT RESIDENT	–
CONTRACTOR	–
PROJECT COMPLETION DATE	–

MAINE DEPARTMENT OF TRANSPORTATION
ACADIA GATEWAY FACILITY
INTERMODAL AND WELCOME CENTER

PLAN DETAILS VI

SHEET NUMBER
A815

\\na.aecomnet.com\lfs\AMER\Boston-USBOS01\DCS\Projects\TRN\60653001_MaineDOT_Acadia_Gateway\900_CAD_GIS\910_CAD\Sheet\A815.dwg Jan 17, 2022 - 4:33pm

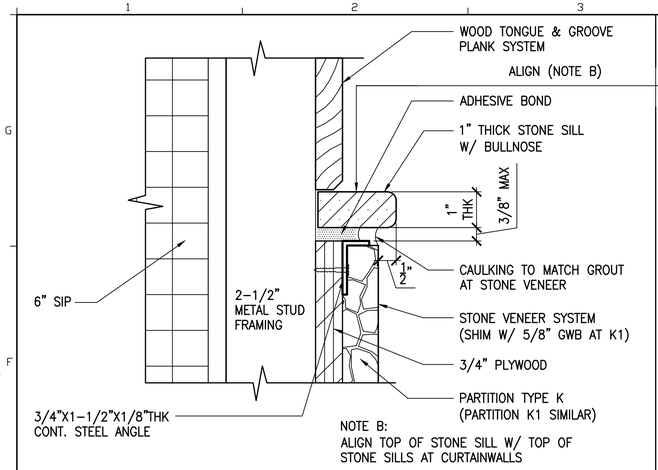

3 WALL STONE SILL DETAIL
6"=1'-0"

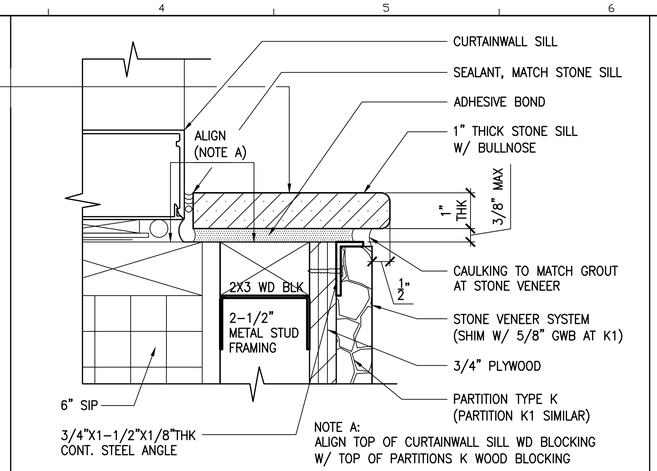

2 CURTAINWALL STONE SILL DETAIL
6"=1'-0"

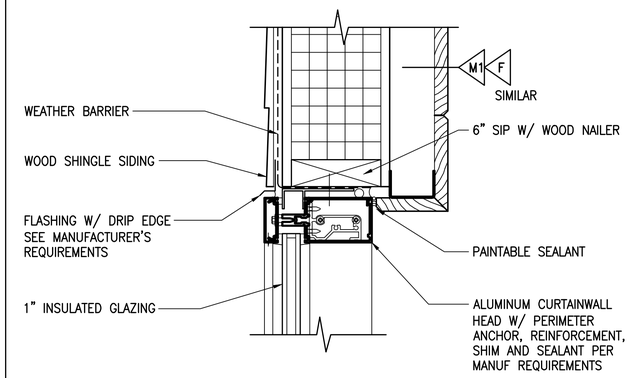

1 CURTAINWALL HEAD DETAIL
3"=1'-0"

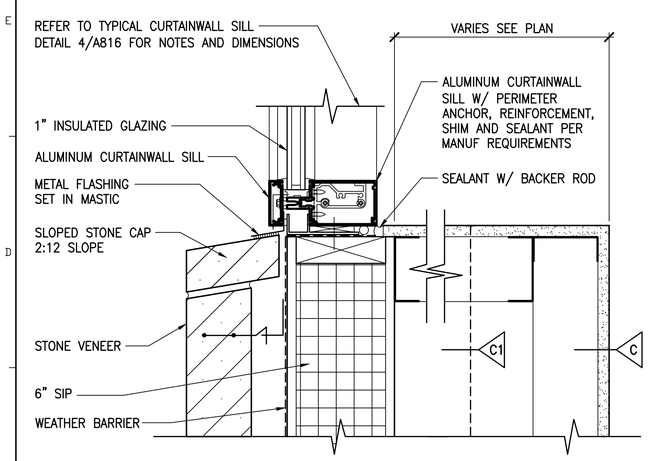

6 CURTAINWALL SILL DETAIL AT ELEVATION 4/A823
3"=1'-0"

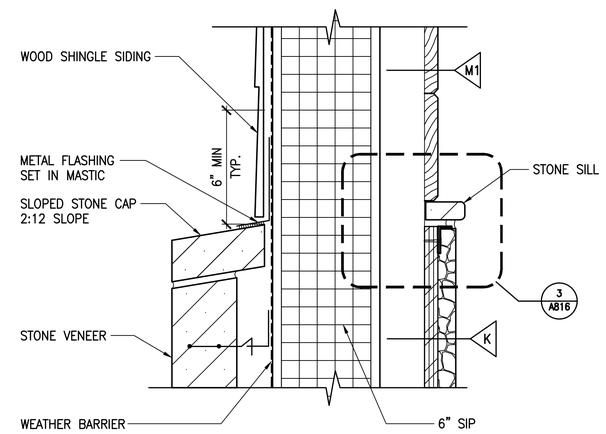

5 WALL SILL DETAIL – OPEN AREA
3"=1'-0"

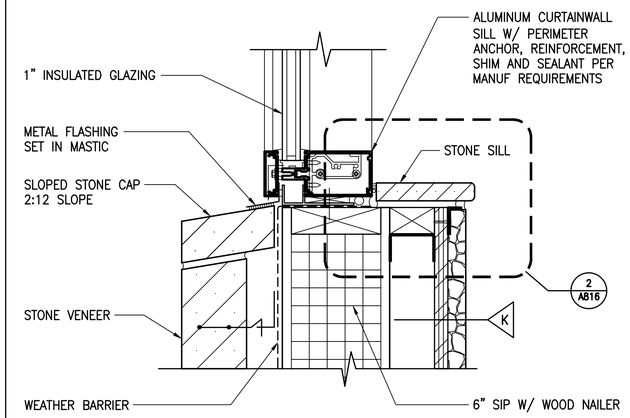

4 TYPICAL CURTAINWALL SILL DETAIL
3"=1'-0"

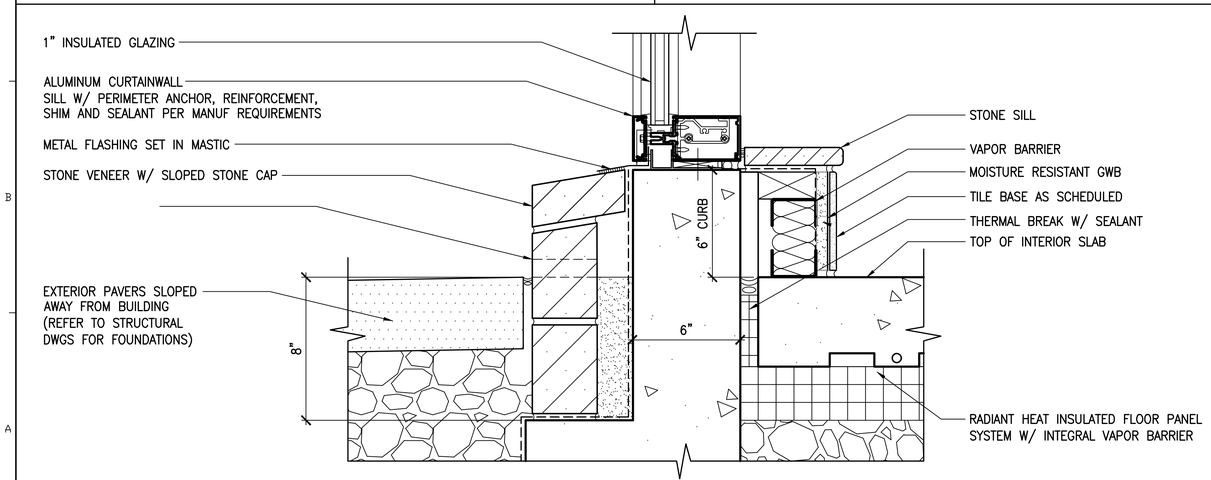

8 TYPICAL CURTAINWALL SILL DETAIL AT GRADE
3"=1'-0"

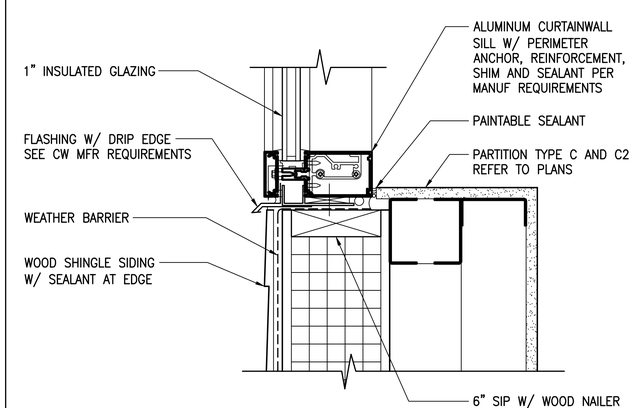

7 CURTAINWALL SILL DETAIL AT DORMER
3"=1'-0" JAMB SIMILAR

AECOM
1 FEDERAL STREET, 8TH FLOOR
BOSTON, MA 02110
617.723.1700
www.aecom.com

STATE OF MAINE
DEPARTMENT OF TRANSPORTATION

DATE

FED PIN NO: NA
WIN NO: 017163.02 & 017163.03

LICENSED ARCHITECT KARYLA MICHELLE WENGLER No. 5292 STATE OF MAINE

SIGNATURE

ARCH. LIN. NUMBER ARC5292

DATE JANUARY 17, 2022

PROJECT	INFORMATION
PROGRAM	–
PROJECT MANAGER	–
DESIGNER	AECOM
CONSULTANT	–
PROJECT RESIDENT	–
CONTRACTOR	–
PROJECT COMPLETION DATE	–

MAINE DEPARTMENT OF TRANSPORTATION
ACADIA GATEWAY FACILITY
INTERMODAL AND WELCOME CENTER

SECTION DETAILS I

SHEET NUMBER
A816

\\na.aecomnet.com\lfs\AMER\Boston-USBOS01\DCS\Projects\TRN\60653001_MaineDOT_Acadia_Gateway\900_CAD_GIS\910_CAD\Sheet\A816.dwg Jan 17, 2022 - 3:40pm

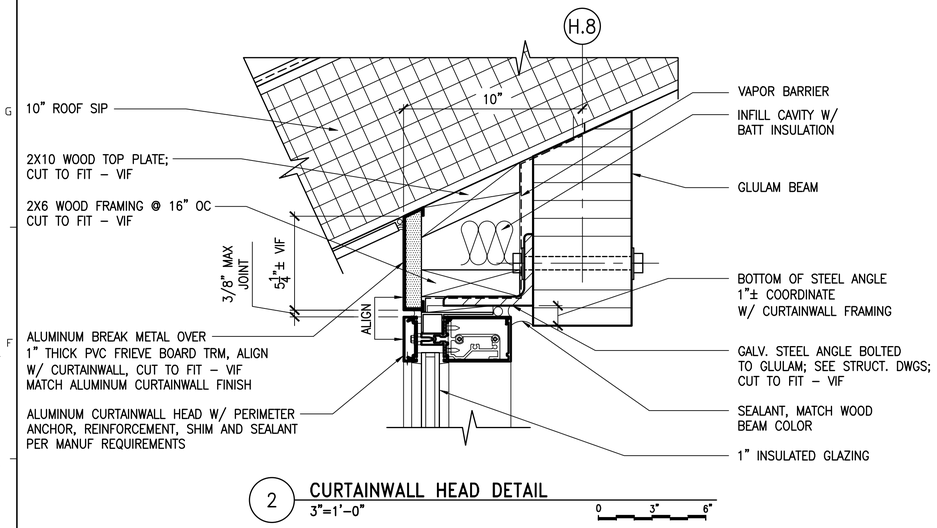

2 CURTAINWALL HEAD DETAIL
3"=1'-0"

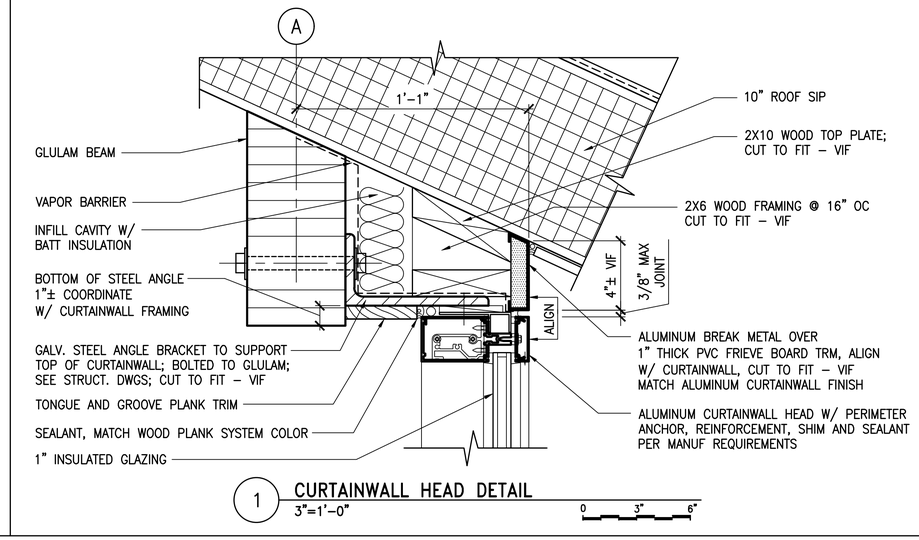

1 CURTAINWALL HEAD DETAIL
3"=1'-0"

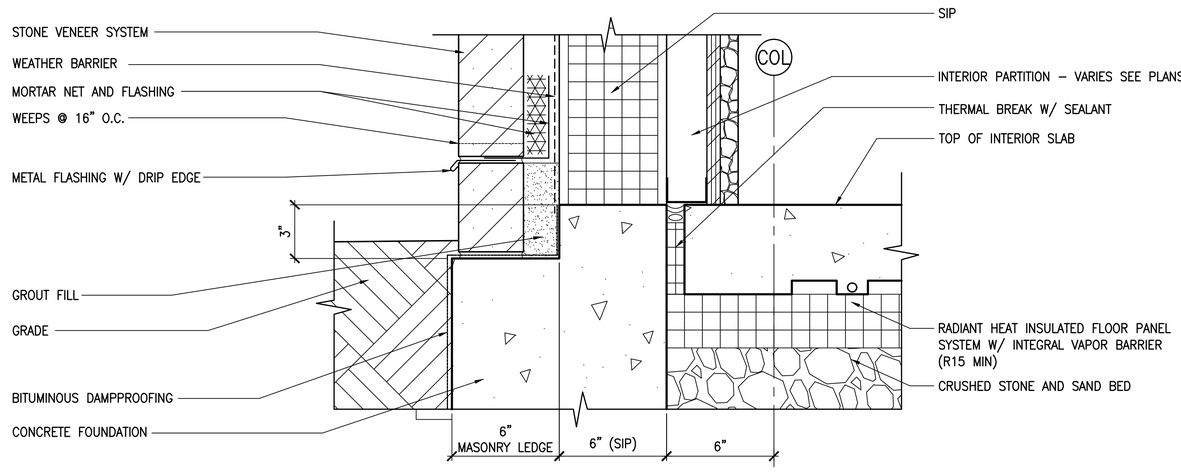

3 SILL DETAIL AT GRADE
3"=1'-0"

AECOM
1 FEDERAL STREET, 8TH FLOOR
BOSTON, MA 02110
617.723.1700
www.aecom.com

STATE OF MAINE
DEPARTMENT OF TRANSPORTATION

DATE

FED PIN NO: NA
WIN NO: 017163.02 & 017163.03

LICENSED ARCHITECT KAYLA MICHELLE WENGLER No. 5292 STATE OF MAINE

SIGNATURE
ARCH. LIN. NUMBER ARC5292
DATE JANUARY 17, 2022

PROJECT	INFORMATION
PROGRAM	–
PROJECT MANAGER	–
DESIGNER	AECOM
CONSULTANT	–
PROJECT RESIDENT	–
CONTRACTOR	–
PROJECT COMPLETION DATE	–

MAINE DEPARTMENT OF TRANSPORTATION
ACADIA GATEWAY FACILITY
INTERMODAL AND WELCOME CENTER
SECTION DETAILS II

SHEET NUMBER
A817

\\na.aecomnet.com\lfs\AMER\Boston-USBOS01\DCS\Projects\TRN\60653001_MaineDOT_Acadia_Gateway\900_CAD_GIS\910_CAD\Sheet\A817.dwg Jan 17, 2022 - 3:41pm

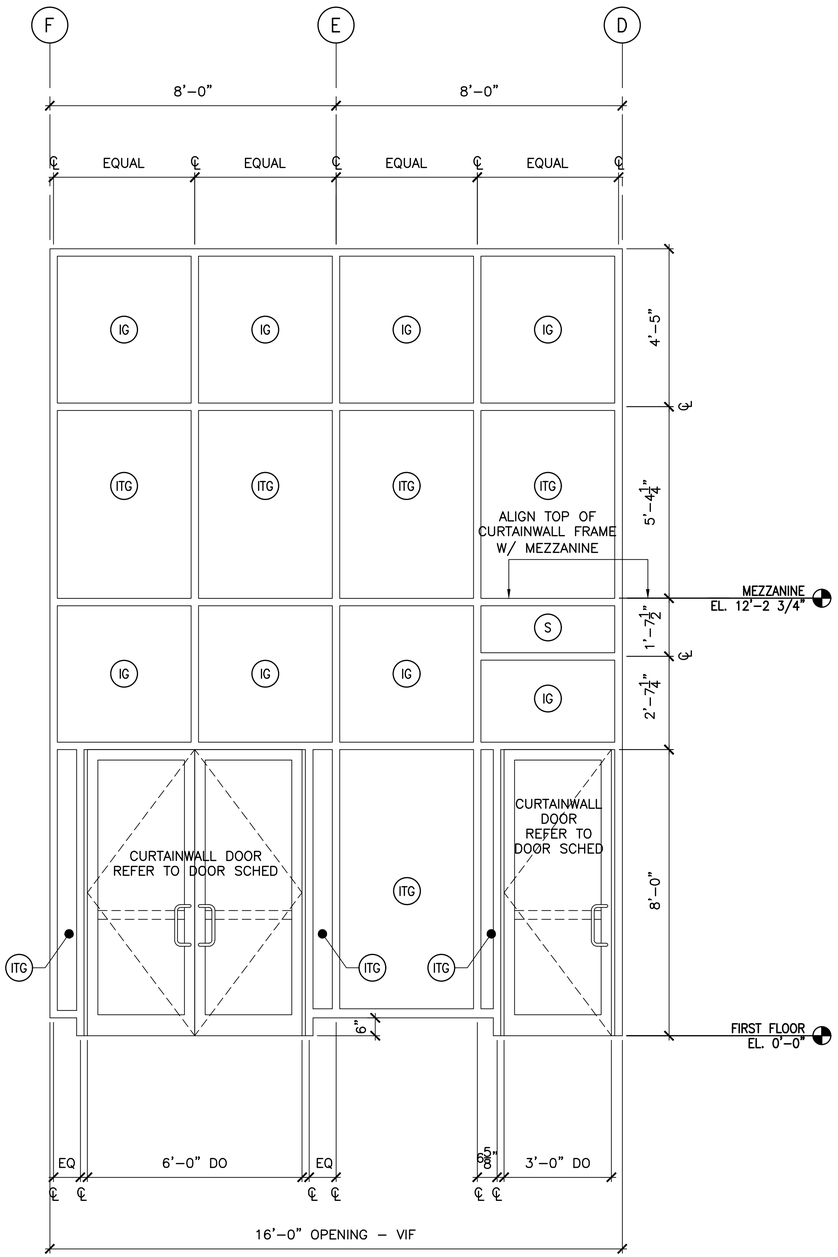

2 CURTAINWALL ELEVATION (1/A302)
1/2"=1'-0"

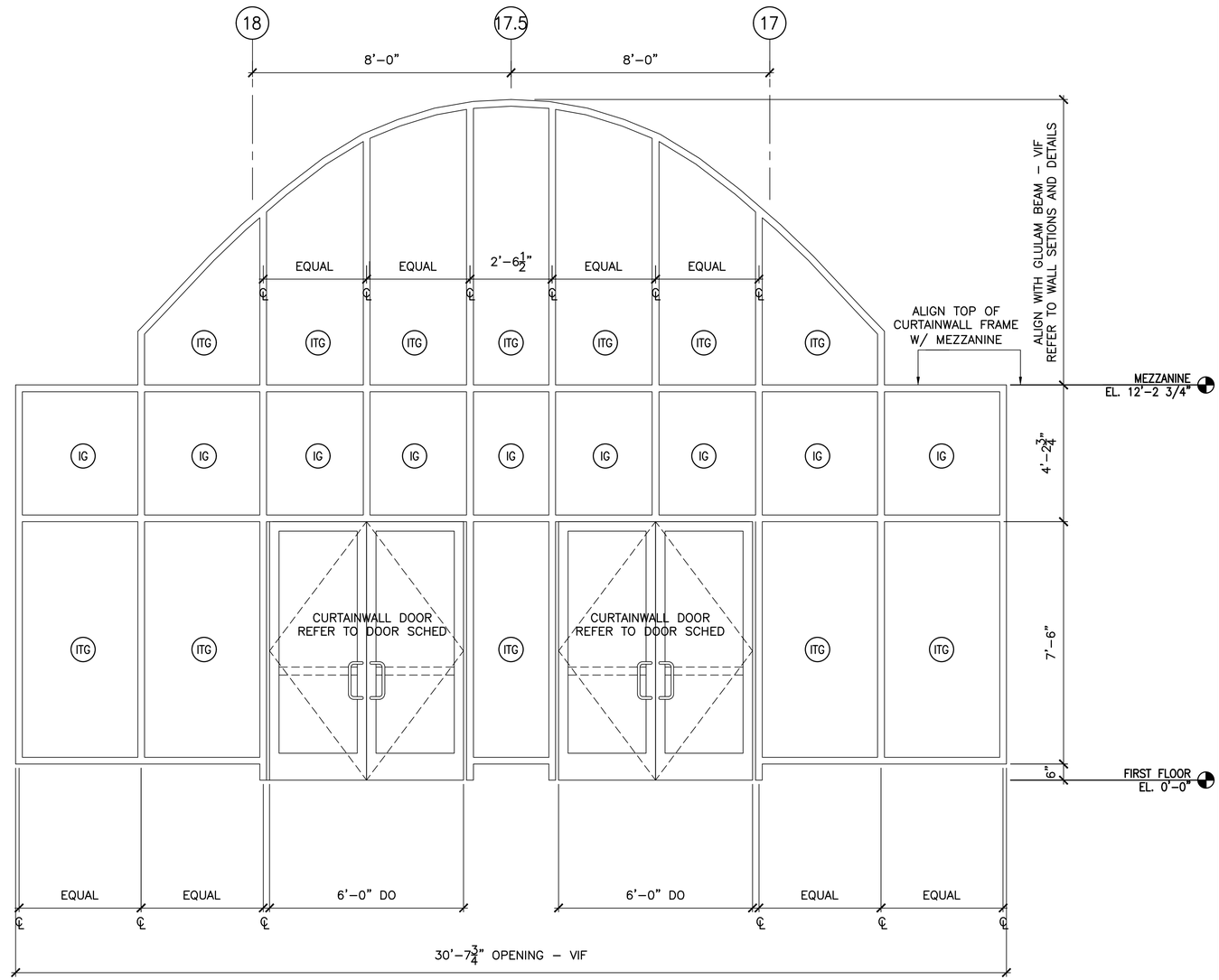

1 CURTAINWALL ELEVATION (1/A301)
1/2"=1'-0"

GLAZING LEGEND	
IG	1" INSULATED GLASS
ITG	1" INSULATED TEMPERED GLASS
S	1" INSULATED SPANDREL GLASS
MTL	CURTAINWALL METAL PANEL

CURTAINWALL NOTES:

1. REFER TO SPECIFICATIONS FOR GLAZING THICKNESS.
2. REFER TO SPECIFICATIONS FOR GLAZING REQUIREMENTS PER CONDITION.
3. REFER TO CURTAINWALL MANUFACTURER'S REQUIREMENTS AND SPECIFICATIONS.

AECOM
1 FEDERAL STREET, 8TH FLOOR
BOSTON, MA 02110
617.723.1700
www.aecom.com

STATE OF MAINE
DEPARTMENT OF TRANSPORTATION

DATE	
FED PIN NO: NA	
WIN NO: 017163.02 & 017163.03	

LICENSED ARCHITECT KAYLA MICHELLE WENGER No. 5292 STATE OF MAINE

PROJECT INFORMATION	
PROGRAM	–
PROJECT MANAGER	–
DESIGNER	AECOM
CONSULTANT	–
PROJECT RESIDENT	–
CONTRACTOR	–
PROJECT COMPLETION DATE	–

SIGNATURE
ARCH. LIN. NUMBER ARC5292
DATE JANUARY 17, 2022

MAINE DEPARTMENT OF TRANSPORTATION
ACADIA GATEWAY FACILITY
INTERMODAL AND WELCOME CENTER
CURTAINWALL ELEVATIONS I

SHEET NUMBER
A820

\\na.aecomnet.com\lfs\AMER\Boston-USBOS01\DCS\Projects\TRN\60653001_MaineDOT_Acadia_Gateway\900_CAD_GIS\910_CAD\Sheet\A820.dwg Jan 17, 2022 - 3:41pm

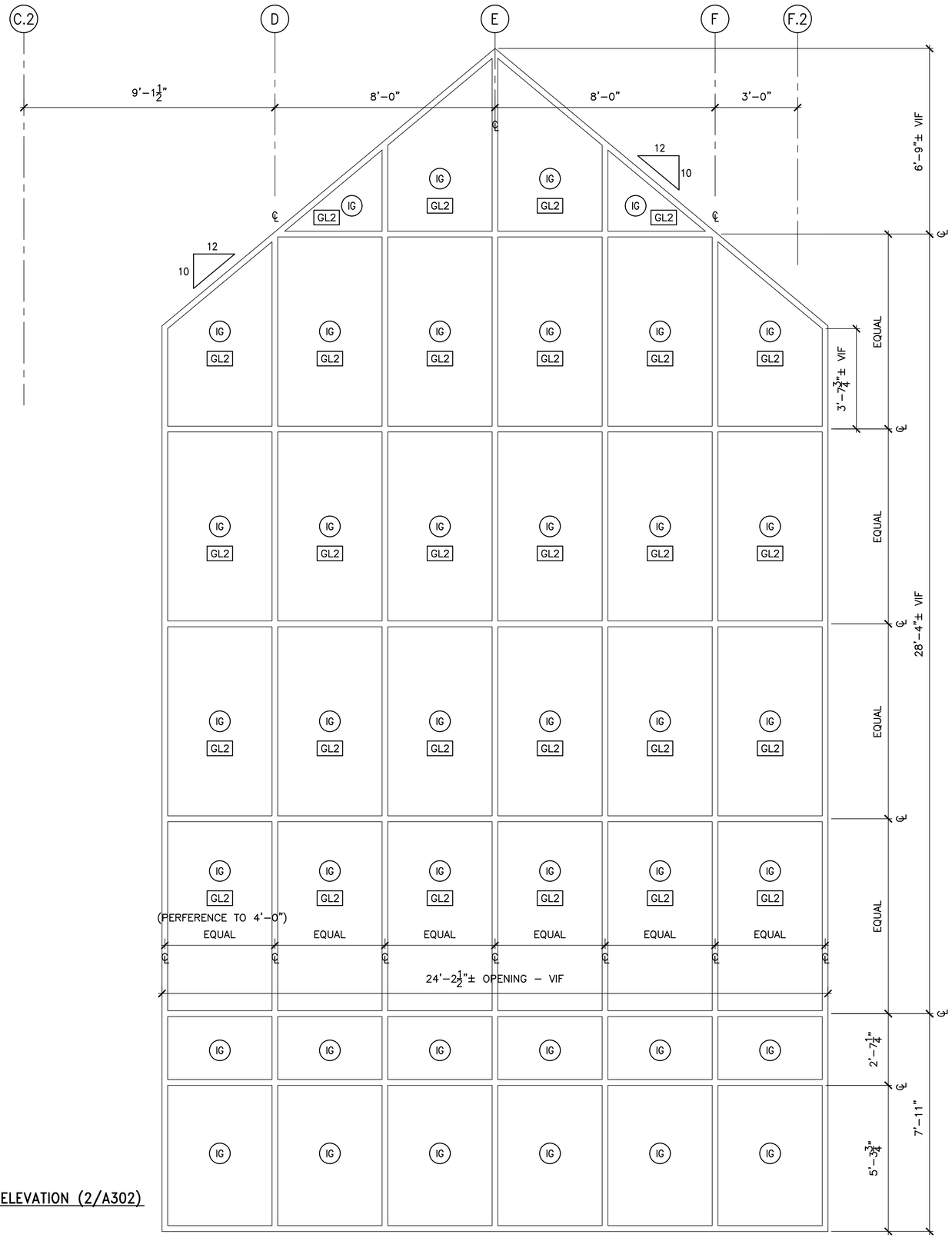

1 CURTAINWALL ELEVATION (2/A302)
1/2"=1'-0"

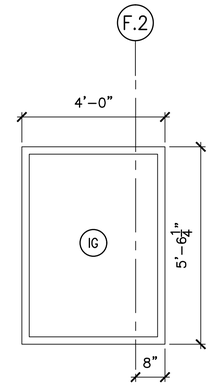

2 CURTAINWALL ELEVATION (1/A302)
1/2"=1'-0"

GLAZING LEGEND	
IG	1" INSULATED GLASS
ITG	1" INSULATED TEMPERED GLASS

CURTAINWALL NOTES:

1. REFER TO SPECIFICATIONS FOR GLAZING THICKNESS.
2. REFER TO SPECIFICATIONS FOR GLAZING REQUIREMENTS PER CONDITION.
3. REFER TO CURTAINWALL MANUFACTURER'S REQUIREMENTS AND SPECIFICATIONS.
4. ALL INSULATED GLASS TYPE GL1 U.O.N.

AECOM
1 FEDERAL STREET, 8TH FLOOR
BOSTON, MA 02110
617.723.1700
www.aecom.com

STATE OF MAINE
DEPARTMENT OF TRANSPORTATION

DATE

FED PIN NO: NA
WIN NO: 017163.02 & 017163.03

LICENSED ARCHITECT KAYLA MICHELLE WENGLER No. 5292 STATE OF MAINE

SIGNATURE
ARCH. LIN. NUMBER ARC5292
DATE JANUARY 17, 2022

PROJECT INFORMATION	
PROGRAM	–
PROJECT MANAGER	–
DESIGNER	AECOM
CONSULTANT	–
PROJECT RESIDENT	–
CONTRACTOR	–
PROJECT COMPLETION DATE	–

MAINE DEPARTMENT OF TRANSPORTATION
ACADIA GATEWAY FACILITY
INTERMODAL AND WELCOME CENTER
CURTAINWALL ELEVATIONS II

SHEET NUMBER
A821

\\na.aecomnet.com\lfs\AMER\Boston-USBDS01\DCS\Projects\TRN\60653001_MaineDOT_Acadia_Gateway\900_CAD_GIS\910_CAD\Sheet\A821.dwg Jan 17, 2022 - 3:41pm

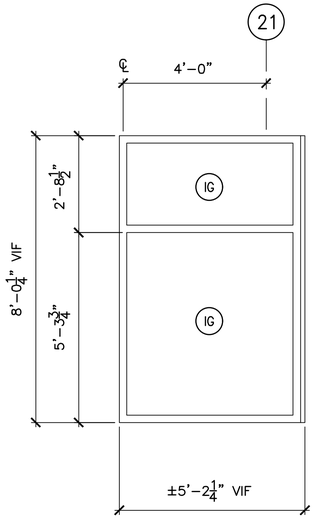

3 CURTAINWALL ELEVATION (2/A301)
1/2"=1'-0"

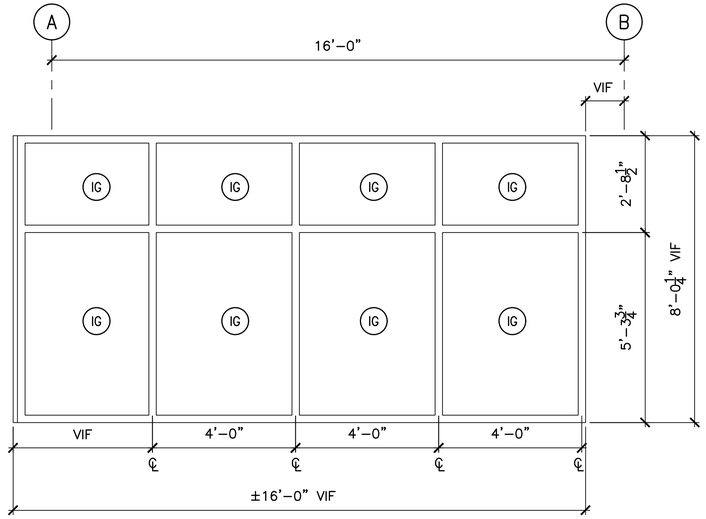

2 CURTAINWALL ELEVATION (2/A302)
1/2"=1'-0"

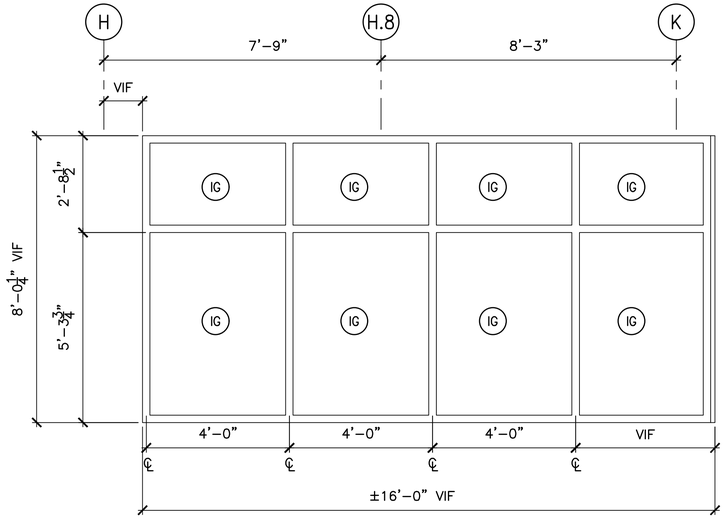

1 CURTAINWALL ELEVATION (2/A302)
1/2"=1'-0"

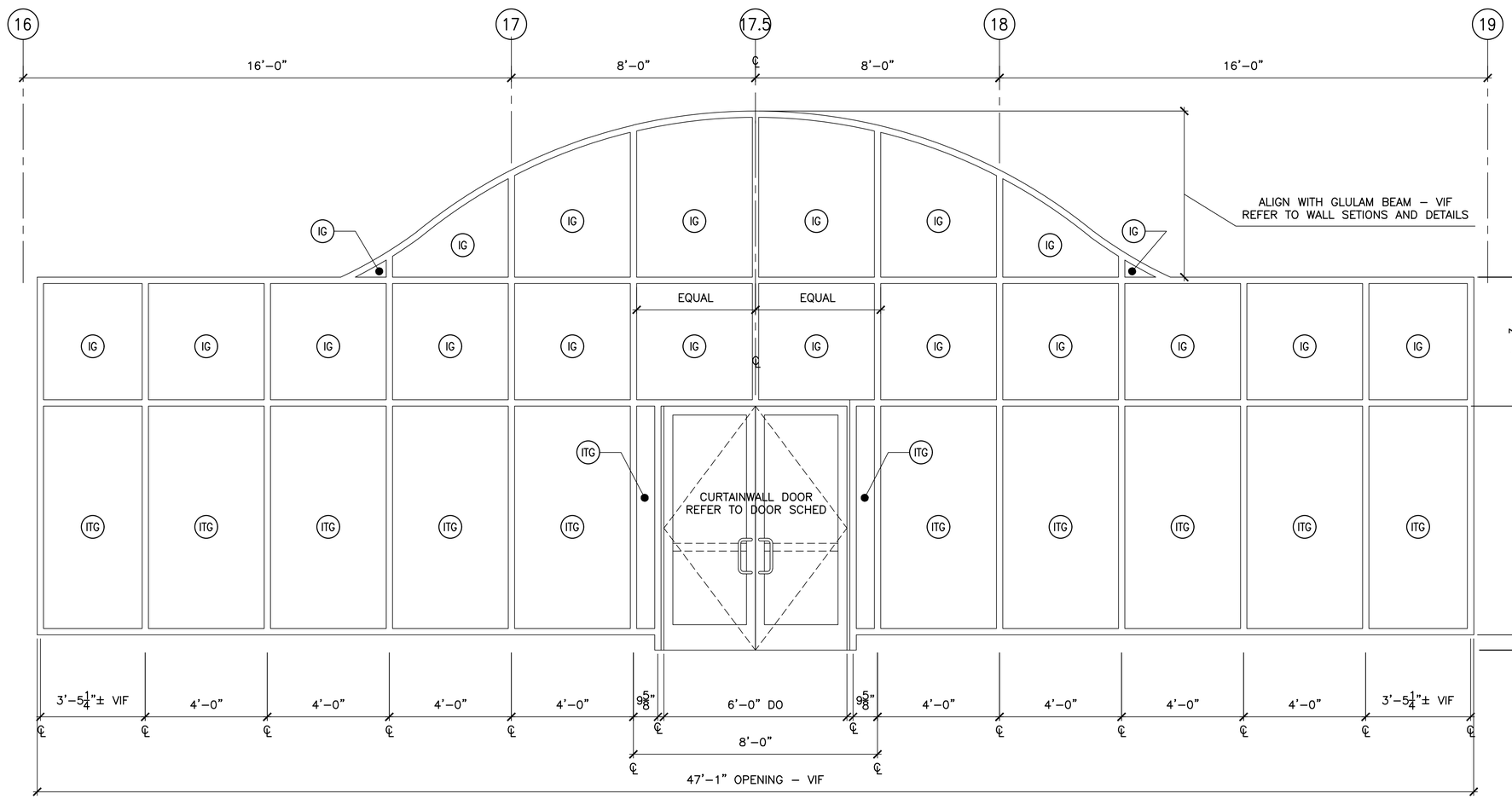

4 CURTAINWALL ELEVATION (2/A301)
1/2"=1'-0"

GLAZING LEGEND	
IG	1" INSULATED GLASS
ITG	1" INSULATED TEMPERED GLASS
S	1" INSULATED SPANDREL GLASS
MTL	CURTAINWALL METAL PANEL

CURTAINWALL NOTES:

1. REFER TO SPECIFICATIONS FOR GLAZING THICKNESS.
2. REFER TO SPECIFICATIONS FOR GLAZING REQUIREMENTS PER CONDITION.
3. REFER TO CURTAINWALL MANUFACTURER'S REQUIREMENTS AND SPECIFICATIONS.

AECOM
1 FEDERAL STREET, 8TH FLOOR
BOSTON, MA 02110
617.723.1700
www.aecom.com

STATE OF MAINE
DEPARTMENT OF TRANSPORTATION

DATE

FED PIN NO: NA
WIN NO: 017163.02 & 017163.03

LICENSED ARCHITECT KATIA MICHELLE WENGLER No. 5292 STATE OF MAINE

SIGNATURE
ARCH. LIN. NUMBER ARC5292
DATE JANUARY 17, 2022

PROJECT INFORMATION

PROGRAM	–
PROJECT MANAGER	–
DESIGNER	AECOM
CONSULTANT	–
PROJECT RESIDENT	–
CONTRACTOR	–
PROJECT COMPLETION DATE	–

MAINE DEPARTMENT OF TRANSPORTATION
ACADIA GATEWAY FACILITY
INTERMODAL AND WELCOME CENTER

CURTAINWALL ELEVATIONS III

SHEET NUMBER
A822

\\na.aecomnet.com\lfs\AMER\Boston-USBOS01\DCS\Projects\TRN\60653001_MaineDOT_Acadia_Gateway\900_CAD_GIS\910_CAD\Sheet\A822.dwg Jan 17, 2022 - 3:42pm

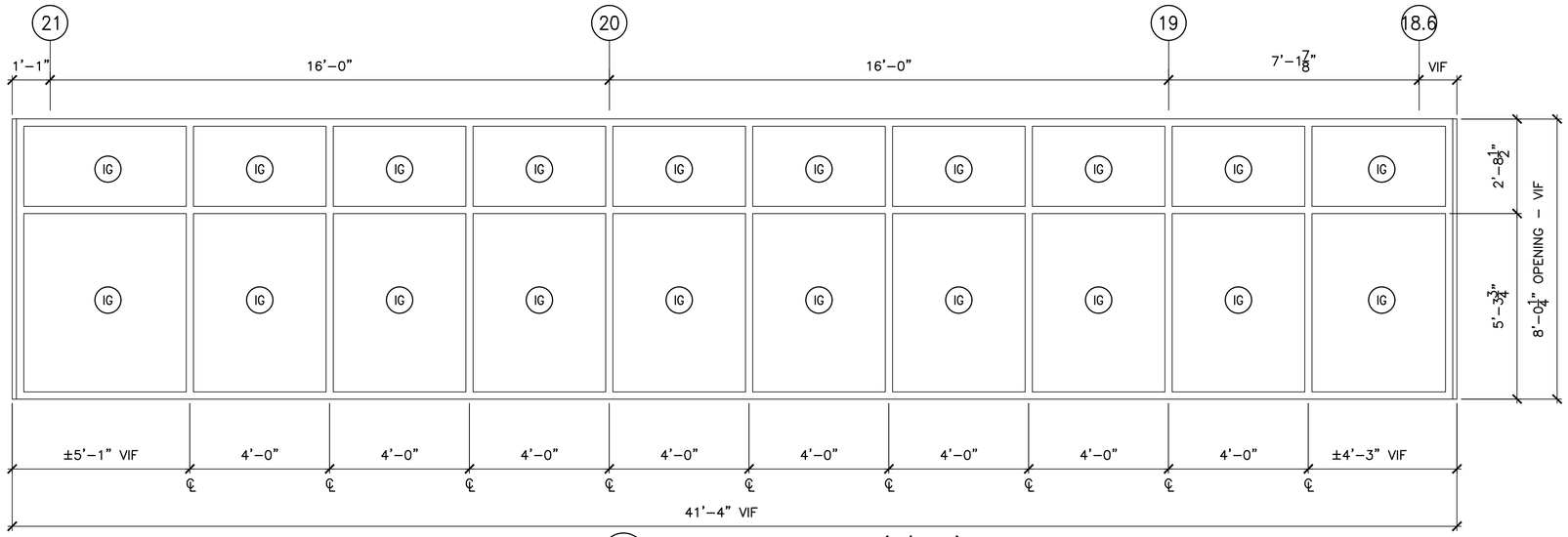

1 CURTAINWALL ELEVATION (1/A301)
1/2"=1'-0"

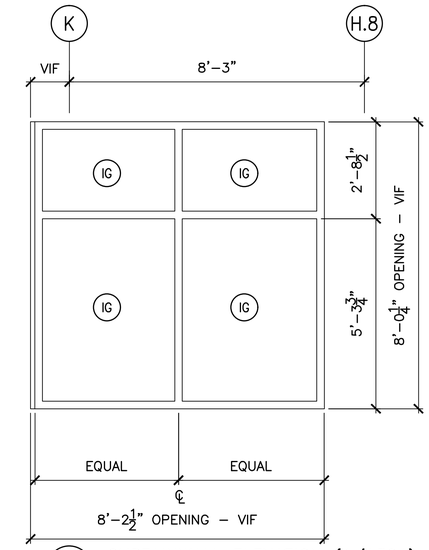

2 CURTAINWALL ELEVATION (1/A301)
1/2"=1'-0"

GLAZING LEGEND	
IG	1" INSULATED GLASS
ITG	1" INSULATED TEMPERED GLASS
S	1" INSULATED SPANDREL GLASS
MTL	CURTAINWALL METAL PANEL

CURTAINWALL NOTES:

1. REFER TO SPECIFICATIONS FOR GLAZING THICKNESS.
2. REFER TO SPECIFICATIONS FOR GLAZING REQUIREMENTS PER CONDITION.
3. REFER TO CURTAINWALL MANUFACTURER'S REQUIREMENTS AND SPECIFICATIONS.

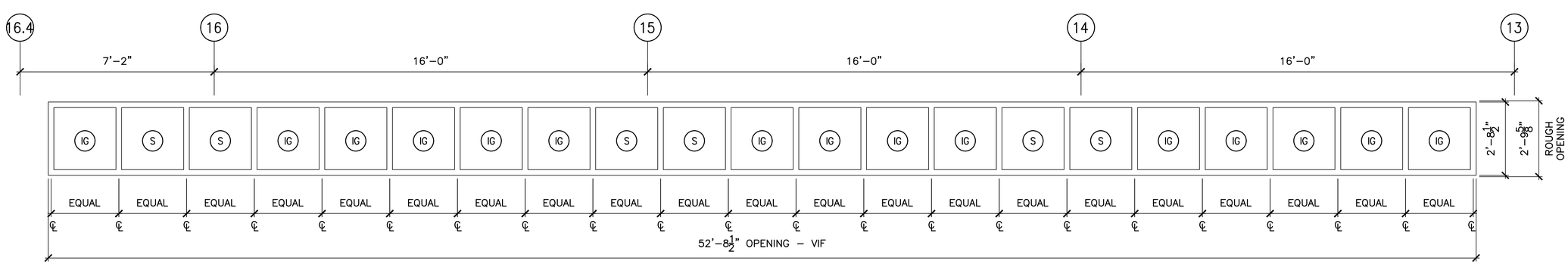

4 CURTAINWALL ELEVATION (1/A301)
1/2"=1'-0"

AECOM
1 FEDERAL STREET, 8TH FLOOR
BOSTON, MA 02110
617.723.1700
www.aecom.com

STATE OF MAINE
DEPARTMENT OF TRANSPORTATION

DATE

FED PIN NO: NA

WIN NO: 017163.02 & 017163.03

LICENSED ARCHITECT KATYA MICHELLE WENGLER No. 5292 STATE OF MAINE

SIGNATURE

ARCH. LIN. NUMBER ARC5292

DATE JANUARY 17, 2022

PROJECT INFORMATION

PROGRAM	–
PROJECT MANAGER	–
DESIGNER	AECOM
CONSULTANT	–
PROJECT RESIDENT	–
CONTRACTOR	–
PROJECT COMPLETION DATE	–

MAINE DEPARTMENT OF TRANSPORTATION
ACADIA GATEWAY FACILITY
INTERMODAL AND WELCOME CENTER

CURTAINWALL ELEVATIONS IV

SHEET NUMBER
A823

\\na.aecomnet.com\lfs\AMER\Boston-USBOS01\DCS\Projects\TRN\60653001_MaineDOT_Acadia_Gateway\900_CAD_GIS\910_CAD\Sheet\A823.dwg Jan 17, 2022 - 3:42pm

GLAZING LEGEND	
T	1/2" TEMPERED GLASS

STOREFRONT NOTES:

1. REFER TO SPECIFICATIONS FOR GLAZING THICKNESS.
2. REFER TO SPECIFICATIONS FOR GLAZING REQUIREMENTS PER CONDITION.
3. REFER TO CSTOREFRONT MANUFACTURER'S REQUIREMENTS AND SPECIFICATIONS.

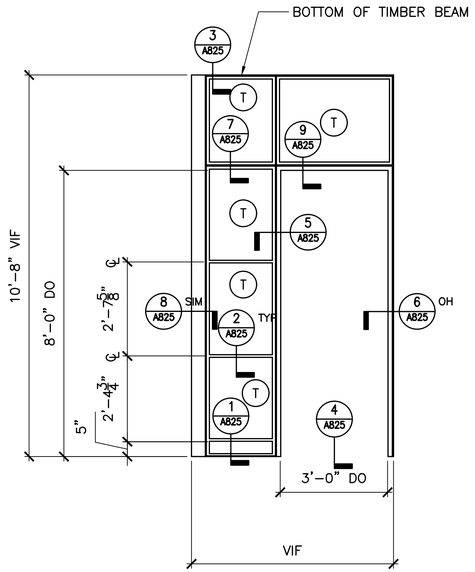

1 STOREFRONT ELEVATION (1/A312)
1/2"=1'-0"

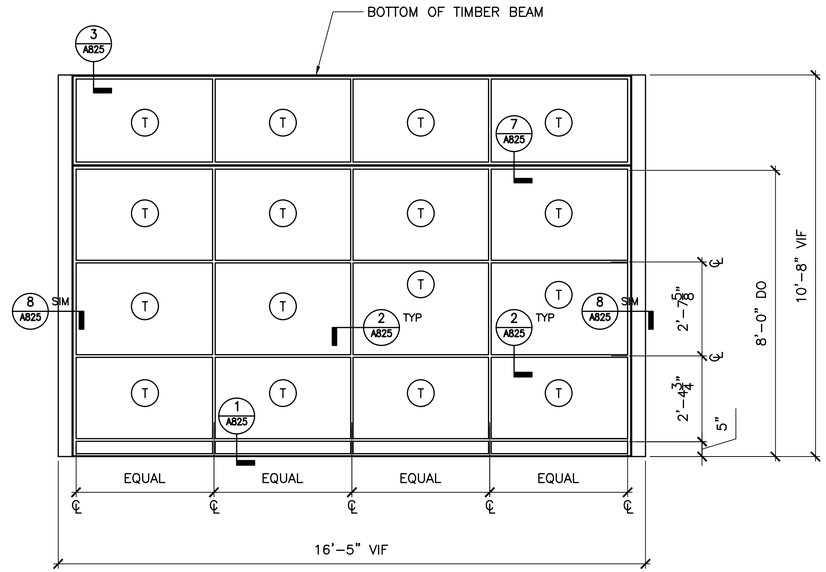

2 STOREFRONT ELEVATION (4/A714)
1/2"=1'-0"

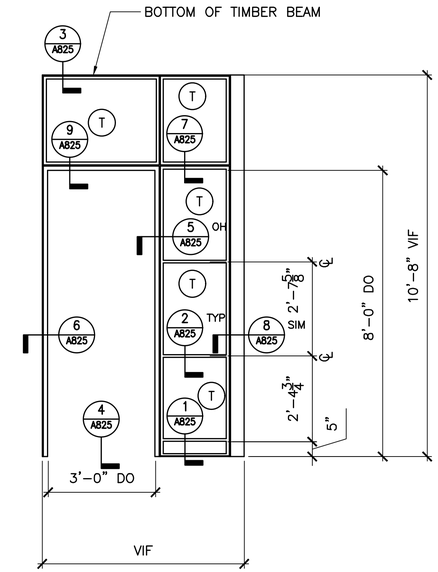

3 STOREFRONT ELEVATION (2/A311)
1/2"=1'-0"

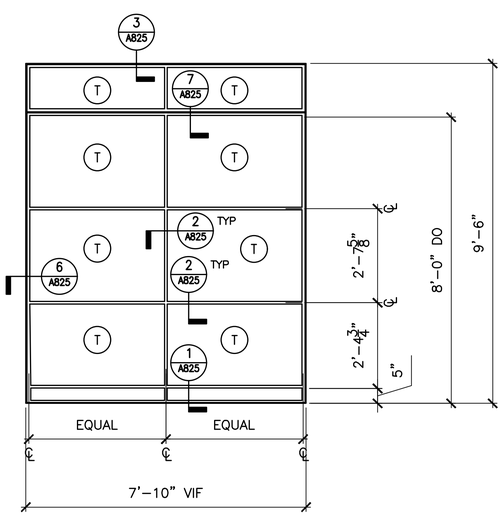

4 STOREFRONT ELEVATION (3/A714)
1/2"=1'-0"

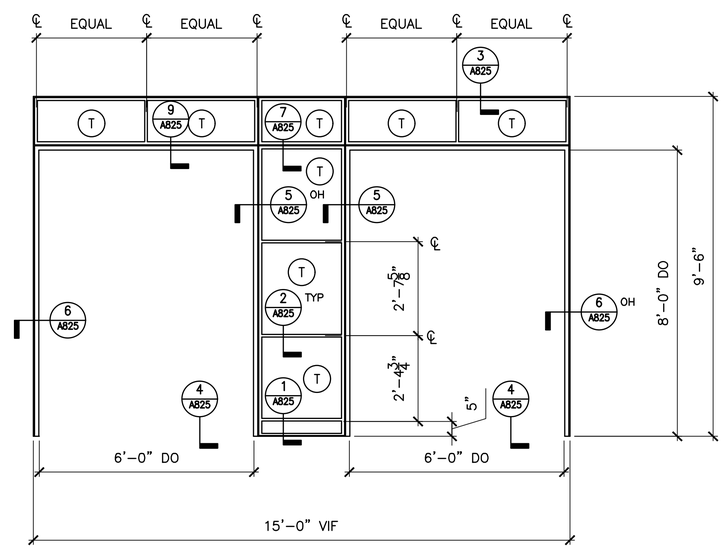

5 STOREFRONT ELEVATION (3/A714)
1/2"=1'-0"

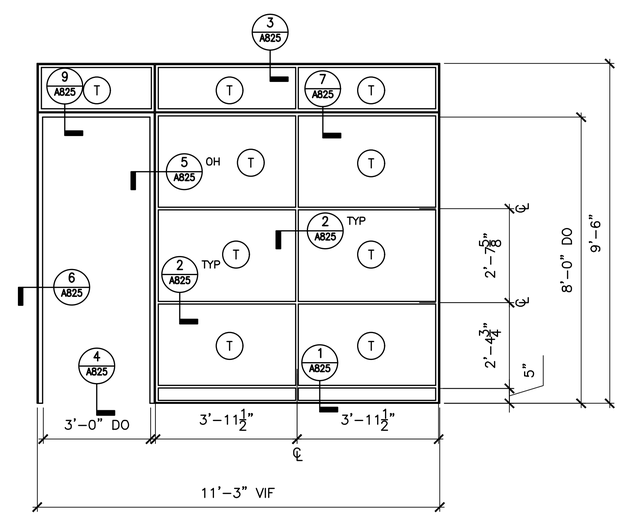

6 STOREFRONT ELEVATION (2/A714)
1/2"=1'-0"

AECOM
1 FEDERAL STREET, 8TH FLOOR
BOSTON, MA 02110
617.723.1700
www.aecom.com

STATE OF MAINE
DEPARTMENT OF TRANSPORTATION

DATE

FED PIN NO: NA

WIN NO: 017163.02 & 017163.03

LICENSED ARCHITECT KARYLA MICHELLE WENGLER No. 5292 STATE OF MAINE

SIGNATURE

ARCH. LIN. NUMBER ARC5292

DATE JANUARY 17, 2022

PROJECT INFORMATION	
PROGRAM	–
PROJECT MANAGER	–
DESIGNER	AECOM
CONSULTANT	–
PROJECT RESIDENT	–
CONTRACTOR	–
PROJECT COMPLETION DATE	–

MAINE DEPARTMENT OF TRANSPORTATION
ACADIA GATEWAY FACILITY
INTERMODAL AND WELCOME CENTER

STEEL STOREFRONT ELEVATIONS

SHEET NUMBER
A824

\\na.aecomnet.com\lfs\AMER\Boston-USBOS01\DCS\Projects\TRN\60653001_MaineDOT_Acadia_Gateway\900_CAD_GIS\910_CAD\Sheet\A824.dwg Jan 17, 2022 - 3:43pm

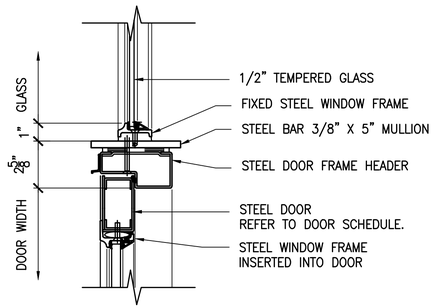

9 DOOR HEAD @ TRANSOM
3"=1'-0"

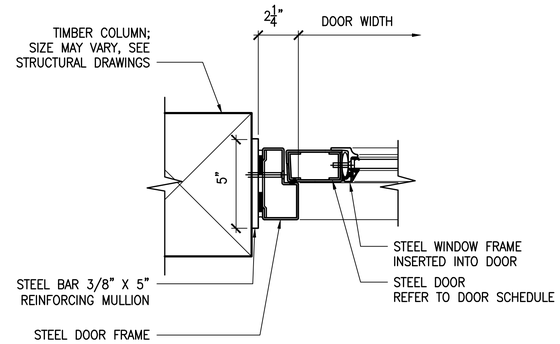

6 DOOR JAMB W/ TIMBER COLUMN DETAIL
3"=1'-0"

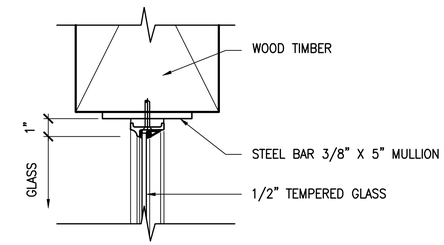

3 HEAD DETAIL
3"=1'-0"

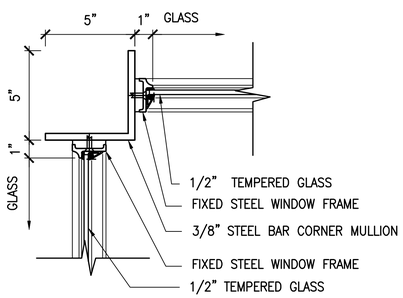

8 PLAN DETAIL @ MULLION CORNER
3"=1'-0"

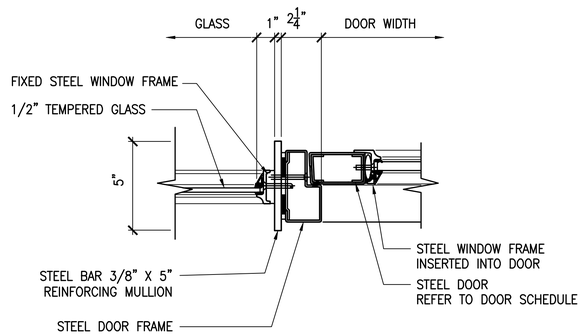

5 DOOR JAMB W/ SIDE LITE DETAIL
3"=1'-0"

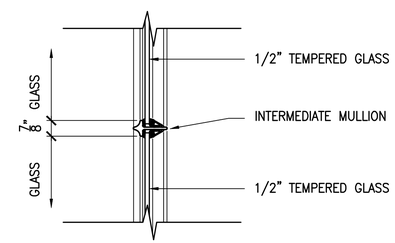

2 HORIZONTAL MULLION DETAIL; VERTICAL SIM.
3"=1'-0"

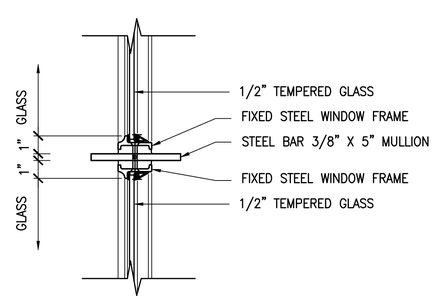

7 HORIZONTAL BAR MULLION @ TRANSOM
3"=1'-0"

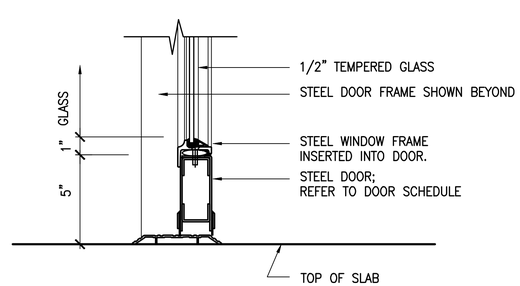

4 DOOR THRESHOLD DETAIL
3"=1'-0"

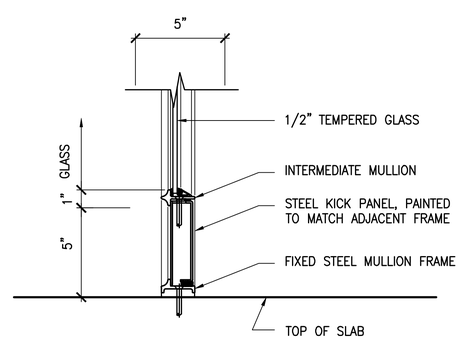

1 SILL DETAIL
3"=1'-0"

AECOM
1 FEDERAL STREET, 8TH FLOOR
BOSTON, MA 02110
617.723.1700
www.aecom.com

STATE OF MAINE
DEPARTMENT OF TRANSPORTATION

DATE

FED PIN NO: NA
WIN NO: 017163.02 & 017163.03

LICENSED ARCHITECT KATYA MICHELLE WENGLER No. 5292 STATE OF MAINE

SIGNATURE
ARCH. LIN. NUMBER ARC5292
DATE JANUARY 17, 2022

PROJECT	INFORMATION
PROGRAM	–
PROJECT MANAGER	–
DESIGNER	AECOM
CONSULTANT	–
PROJECT RESIDENT	–
CONTRACTOR	–
PROJECT COMPLETION DATE	–

MAINE DEPARTMENT OF TRANSPORTATION
ACADIA GATEWAY FACILITY
INTERMODAL AND WELCOME CENTER
STEEL STOREFRONT DETAILS

SHEET NUMBER
A825

\\na.aecomnet.com\lfs\AMER\Boston-USBOS01\DCS\Projects\TRN\60653001_MaineDOT_Acadia_Gateway\900_CAD_GIS\910_CAD\Sheet\A825.dwg Jan 17, 2022 - 3:43pm

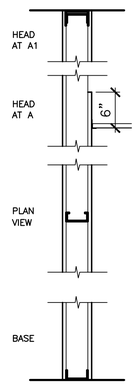

DESCRIPTION

A GWB & METAL STUD PARTITION
- 5/8" GYPSUM WALLBOARD, BOTH SIDES
- 3-5/8" 20 GA METAL STUDS 16" OC
- NOTE 2

A1 1 HR GWB & METAL STUD PARTITION
- 5/8" TYPE 'X' GYPSUM WALL BOARD, BOTH SIDES
- 3 5/8" 20 GA METAL STUDS 16" OC
- EXTEND GWB TO DECK
- CHANNEL RECEPTOR AT HEAD
- 1 HR SEALANT AT PERIMETER AND ALL ALL PENETRATIONS
- FIRE SAFING AT DEFLECTION TRACK

A2 SMOKE GWB & METAL STUD PARTITION
- 5/8" GYPSUM WALLBOARD, BOTH SIDES
- 3 5/8" 20 GA METAL STUDS 16" OC
- EXTEND GWB TO DECK
- CHANNEL RECEPTOR AT HEAD
- SMOKE SEALANT AT PERIMETER AND ALL ALL PENETRATIONS
- DEFLECTION TRACK

REMARKS

UL NUMBER: U419

PARTITION TYPE **A A1 A2**

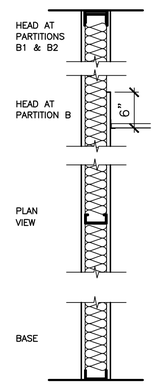

DESCRIPTION

B INSULATED GWB & METAL STUD PARTITION
- 5/8" GYPSUM WALLBOARD, BOTH SIDES
- 3-5/8" 20 GA METAL STUDS 16" OC
- SOUND ATTENUATION BATTS
- NOTE 2

B1 INSULATED 1 HR GWB & METAL STUD PARTITION
- 5/8" TYPE 'X' GYPSUM WALL BOARD, BOTH SIDES
- 3 5/8" 20 GA METAL STUDS 16" OC
- EXTEND GWB TO DECK
- CHANNEL RECEPTOR AT HEAD
- SOUND ATTENUATION BATTS
- 1 HR SEALANT AT PERIMETER AND ALL ALL PENETRATIONS
- FIRE SAFING AT DEFLECTION TRACK

B2 INSULATED SMOKE GWB & METAL STUD PARTITION
- 5/8" GYPSUM WALLBOARD, BOTH SIDES
- 3 5/8" 20 GA METAL STUDS 16" OC
- EXTEND GWB TO DECK
- CHANNEL RECEPTOR AT HEAD
- SOUND ATTENUATION BATTS
- SMOKE SEALANT AT PERIMETER AND ALL ALL PENETRATIONS
- DEFLECTION TRACK

B3 INSULATED SMOKE GWB & METAL STUD PARTITION
- 5/8" GYPSUM WALLBOARD, BOTH SIDES
- 3 5/8" 20 GA METAL STUDS 16" OC
- EXTEND GWB TO DECK
- CHANNEL RECEPTOR AT HEAD
- SOUND ATTENUATION BATTS
- SMOKE SEALANT AT PERIMETER AND ALL ALL PENETRATIONS
- DEFLECTION TRACK
- ACOUSTIC PLASTER

UL NUMBER: U419

PARTITION TYPE **B B1 B2 B3**

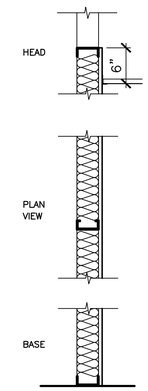

DESCRIPTION

C PLUMBING CHASE
- 5/8" MOISTURE RESISTANT GWB
- 3-5/8" 20 GA METAL STUDS 16" OC
- NOTE 2
- HORIZONTAL BRACING 8'-0" OC VERTICAL

C1 INSULATED PLUMBING CHASE
- 5/8" MOISTURE RESISTANT GWB
- 3-5/8" 20 GA METAL STUDS 16" OC
- NOTE 2
- HORIZONTAL BRACING 8'-0" OC VERTICAL
- SOUND ATTENUATION BATTS

C2 CHASE
- 5/8" GYPSUM WALLBOARD
- 3-5/8" 20 GA METAL STUDS 16" OC
- NOTE 2
- HORIZONTAL BRACING 8'-0" OC VERTICAL

PARTITION TYPE **C C1 C2**

PARTITION NOTES

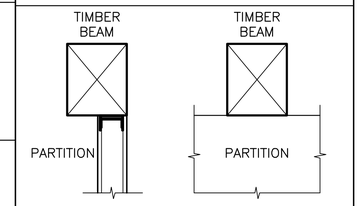

GENERAL PARTITION TYPES DIAGRAM

PARTITION HEADS END AT UNDERSIDE OF TIMBER BEAMS; INSTALL DEFLECTION TRACKS

1. PROVIDE BLOCKING AS REQUIRED, COORDINATE WITH ARCHITECTURAL, PLUMBING AND ELECTRICAL DRAWINGS.
2. FOR NON-RATED WALLS, EXTEND GWB 6" ABOVE ACT CEILING OR TO BOTTOM OF GWB SOFFIT. WHEN THERE IS NEITHER CEILING OR SOFFIT, THEN EXTEND GWB TO BOTTOM OF DECK, ROOF OR BEAM WITH DEFLECTION TRACK.
3. SEE FINISH FLOOR PLANS AND FINISH FLOOR SCHEDULE FOR WALL BASES.
4. ALL WOOD NAILERS, SHIMS, FURRING AND BLOCKING SHALL BE FIRE RESISTANT.

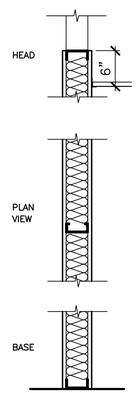

DESCRIPTION

D MOISTURE RESISTANT GWB & METAL STUD PARTITION
- 5/8" MOISTURE RESISTANT GWB ON TOILET, SHOWER, JANITOR CLOSET FACING SIDES 5/8" GWB ON ALL OTHER SIDES
- 3-5/8" 20 GA METAL STUDS 16" OC
- NOTE 2
- HORIZONTAL BRACING 8'-0" OC VERTICAL

D1 INSULATED MOISTURE RESISTANT GWB & METAL STUD PARTITION
- 5/8" MOISTURE RESISTANT GWB ON TOILET, SHOWER, JANITOR CLOSET FACING SIDES 5/8" GWB ON ALL OTHER SIDES
- 3-5/8" 20 GA METAL STUDS 16" OC
- NOTE 2
- HORIZONTAL BRACING 8'-0" OC VERTICAL
- SOUND ATTENUATION BATTS

PARTITION TYPE **D D1**

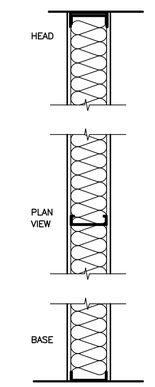

DESCRIPTION

E INSULATED 1 HR GWB & METAL STUD PARTITION
- 5/8" TYPE 'X' GYPSUM WALL BOARD, BOTH SIDES
- 6" 16 GA METAL STUDS 12" OC
- SOUND ATTENUATION BATTS
- SMOKE SAFING AT DEFLECTION TRACK
- 1 HR SEALANT AT PERIMETER AND ALL ALL PENETRATIONS

REMARKS

EXTRA TALL PARTITION
UL NUMBER: U419

PARTITION TYPE **E E1**

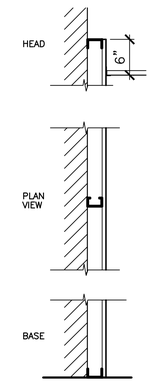

DESCRIPTION

F FURRED INTERIOR WALL
- BACK-UP WALL
- 2-1/2" METAL FURRING 16" OC
- 5/8" GYPSUM WALLBOARD
- INSULATION TO BE ADDED, WHERE REQUIRED, SEE PLAN DETAILS FOR MORE INFORMATION

F1 MOISTURE RESISTANT GWB FURRED INTERIOR WALL
- BACK-UP WALL
- 2-1/2" METAL FURRING 16" OC
- 5/8" MOISTURE RESISTANT GWB
- INSULATION TO BE ADDED, WHERE REQUIRED, SEE PLAN DETAILS FOR MORE INFORMATION

REMARKS
- SEE NOTE 2 FOR ALL TYPE F PARTITION TYPES
- ADD BATT INSULATION WHEN BACK-UP WALLIS AN EXTERIOR WALL

PARTITION TYPE **F F1**

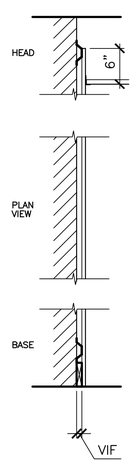

DESCRIPTION

G FURRED INTERIOR WALL
- BACK-UP WALL
- 7/8" METAL FURRING 16" OC
- 5/8" GYPSUM WALLBOARD
- 4" HIGH FR WOOD FURRING AT BASE

G1 FURRED INTERIOR WALL
- BACK-UP WALL
- FIRE RESISTANT WOOD NAILER/SHIM CUT TO FIT - VIF
- 5/8" TYPE 'X' GYPSUM WALLBOARD
- 4" HIGH FR WOOD FURRING AT BASE

G2 GWB INTERIOR SHEATHING
- BACK-UP WALL
- 5/8" TYPE 'X' GYPSUM WALLBOARD

PARTITION TYPE **G G1 G2**

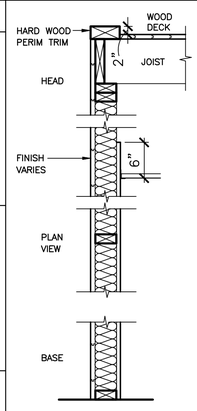

DESCRIPTION

H WOOD STUD PARTITION
- 5/8" GYPSUM WALLBOARD, BOTH SIDES - NOTE 2
- 2X6 WOOD STUDS 16" OC (REFER TO STRUCTURAL)
- SOUND ATTENUATION BATTS
- PROVIDE DOUBLE WOOD TOP PLATE
- PARTITION TO SUPPORT WOOD JOISTS AND WOOD DECK
- 3/4" WOOD TONGUE & GROVE DECK SYSTEM REFER TO FINISH FLOOR PLAN A613
- HARD WOOD PERMITER TRIM, MATCH TIMBER WOOD COLOR, TEXTURE AND STAIN

H1 WOOD STUD PARTITION
- SAME AS PARTITION H EXCEPT THE FOLLOWING
- 2X4 WOOD FRAMING (REFER TO STRUCTURAL)
- REPLACE 5/8" GWB W/ 3/4" WOOD TONGUE & GROOVE PLANK SYSTEM ON PUBLIC SIDE OF PARTITION
- AT MILLWORK ATTACHED TO PARTITION H1: INSTALL 3/4" PLYWOOD FROM FINISH FLOOR TO TOP OF MILLWORK (SLAT-WALL) VIF - REFER TO DETAILS 3/A727 & 6/A727 COORDINATE W/ FLOOR PLANS AND INTERIOR ELEVATIONS

PARTITION TYPE **H H1**

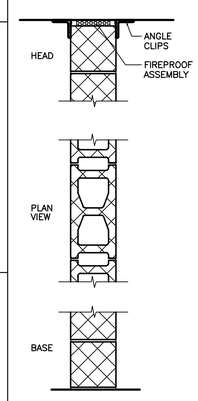

DESCRIPTION

J CMU PARTITION
- 8" CONCRETE MASONRY UNITS
- GALV. STL ANGLE CLIPS @ 48"O.C., BOTH SIDES

J1 1 HR CMU PARTITION
- 8" CONCRETE MASONRY UNITS
- GALV. STL ANGLE CLIPS @ 48"O.C., BOTH SIDES
- FIRE PROOF ASSEMBLY AT HEAD; MINERAL WOOL FIRESTOP INSULATION W/ RATED SEALANT, BOTH SIDES
- 1 HR SEALANT AT PERIMETER AND ALL PENETRATIONS
- FIRE SAFING AT WALL HEAD

J2 2 HR CMU PARTITION
- 8" CONCRETE MASONRY UNITS
- GALV. STL ANGLE CLIPS @ 48"O.C., BOTH SIDES
- FIRE PROOF ASSEMBLY AT HEAD; MINERAL WOOL FIRESTOP INSULATION W/ RATED SEALANT, BOTH SIDES
- 2 HR SEALANT AT PERIMETER AND ALL PENETRATIONS
- FIRE SAFING AT WALL HEAD

REMARKS

REFER TO, AND COORDINATE WITH STRUCTURAL DRAWINGS SPECIFICATIONS FOR REINFORCING AND SEISMIC INFORMATION.

PARTITION TYPE **J J1 J2**

AECOM
1 FEDERAL STREET, 8TH FLOOR
BOSTON, MA 02110
617.723.1700
www.aecom.com

STATE OF MAINE
DEPARTMENT OF TRANSPORTATION

DATE

FED PIN NO: NA

WIN NO: 017163.02 & 017163.03

LICENSED ARCHITECT KAYLA MICHELLE WENGLER No. 5292 STATE OF MAINE

SIGNATURE

ARCH. LIN. NUMBER ARC5292

DATE JANUARY 17, 2022

PROJECT INFORMATION

PROGRAM	-
PROJECT MANAGER	-
DESIGNER	AECOM
CONSULTANT	-
PROJECT RESIDENT	-
CONTRACTOR	-
PROJECT COMPLETION DATE	-

MAINE DEPARTMENT OF TRANSPORTATION
ACADIA GATEWAY FACILITY
INTERMODAL AND WELCOME CENTER

PARTITION TYPES I

SHEET NUMBER
A830

\\na.aecomnet.com\lfs\AMER\Boston-USBOS01\DCS\Projects\TRN\60653001_MaineDOT_Acadia_Gateway\900_CAD_GIS\910_CAD\Sheet\A830.dwg Jan 19, 2022 - 11:32am

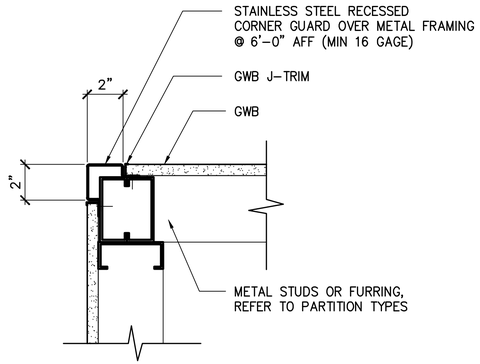

3 PLAN DETAIL AT CORNER GUARD TYPE 1
SCALE: 3" = 1'-0"

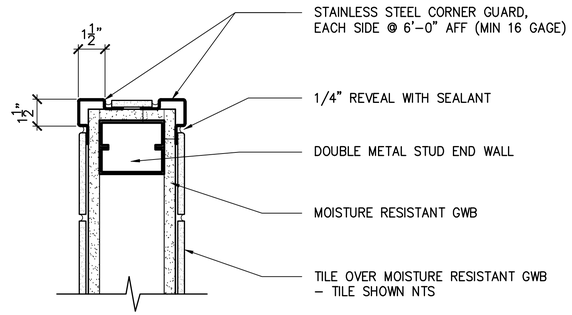

2 PLAN DETAIL AT TILE END-WALL GUARD
SCALE: 3" = 1'-0"

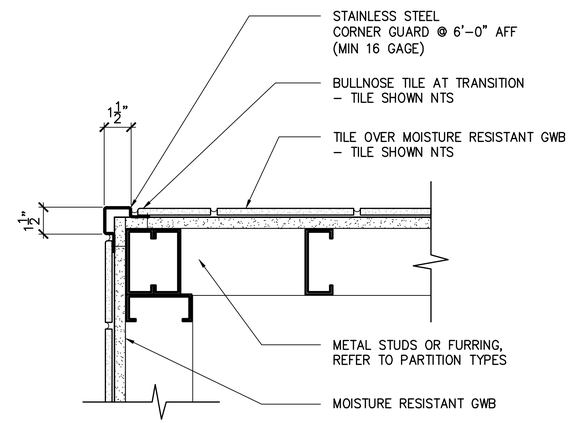

1 PLAN DETAIL AT TILE CORNER GUARD
SCALE: 3" = 1'-0"

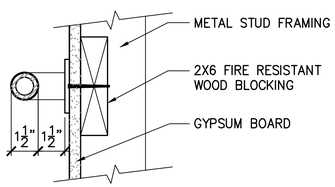

GRAB BAR NOTES:

1. SHALL BE DESIGNED AND SUPPORTED AS TO WITHSTAND A LOAD OF NOT LESS THAN 250 POUNDS APPLIED AT ANY POINT, DOWNWARD OR HORIZONTALLY.
2. GRAB BARS SHALL NOT ROTATE WITHIN THEIR FITTINGS.
3. ALL EDGES SHALL HAVE A MINIMUM RADIUS OF 1/8 INCH.
4. PROVIDE 2X6 BLOCKING INSIDE PARTITIONS AS REQUIRED FOR ATTACHMENT OF ALL GRAB BARS (SEE TYPICAL MOUNTING HEIGHTS SHEET A004).
5. ALL WOOD SHALL BE FIRE RESISTANT.

6 GRAB BAR MOUNTING DETAIL
3"=1'-0"

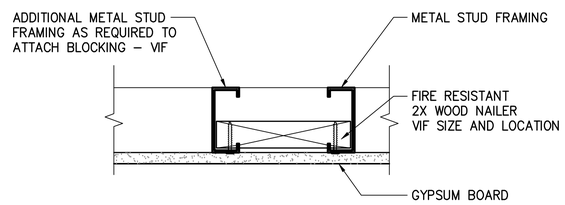

BACKING NOTES

SUPPORT FOR PLUMBING FIXTURES AND CABINETS: METAL STUD WALL SUPPORTING PLUMBING FIXTURES AND CABINETS SHALL BE CONSTRUCTED USING STEEL STUDS OF NOT LESS THAN 20 GAUGE W/ A MINIMUM EFFECTIVE MOMENT OF INERTIA EQUAL TO 0.864 in. SUCH STUDS SHALL BE RIGIDLY CONNECTED TOP AND BOTTOM TO PREVENT END ROTATION OR DISPLACEMENT. A HORIZONTAL MEMBER SHALL BE SECURELY FASTENED TO NOT LESS THAN 2 STUDS AND SHALL BE INSTALLED FOR THE ATTACHMENT OF WALL HUNG FIXTURES.

BACKING FOR TOILET PARTITIONS AND ACCESSORIES: PROVIDE 2X BLOCKING INSIDE PARTITIONS AS REQUIRED FOR ATTACHMENT OF ALL WALL HUNG ITEMS. SEE TYPICAL MOUNTING HEIGHTS SHEET A004 AND ROOM ELEVATION SHEETS.

ALL WOOD SHALL BE FIRE RESISTANT.

5 FIXTURE/CABINET BACKING DETAIL
3"=1'-0"

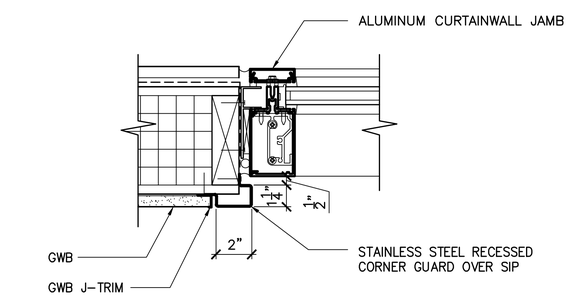

4 PLAN DETAIL AT CORNER GUARD TYPE 2
3"=1'-0"

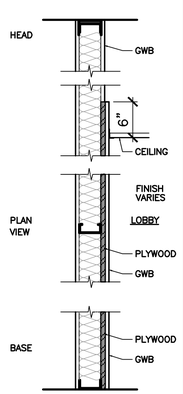

DESCRIPTION

N METAL STUD PARTITION W/ NAILER SUPPORT
- 5/8" GYPSUM WALLBOARD, BOTH SIDES
- SOUND ATTENUATION BATTS
- 3/4" PLYWOOD SHEATHING, LOBBY/VESTIBULE SIDE
- 3-5/8" 20 GA METAL STUDS 12" OC

PARTITION TYPE N

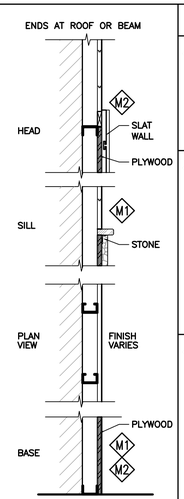

DESCRIPTION

M WOOD TONGUE & GROOVE PLANK FURRED WALL
- BACK-UP WALL
- 2-1/2" METAL FURRING 16" OC
- WOOD TONGUE & GROOVE PLANK SYSTEM

M1 WOOD TONGUE & GROOVE PLANK AT EXTERIOR WALL
- BACK-UP WALL
- 2-1/2" METAL FURRING 16" OC
- AT PARTITION TYPES K & K1, 3/4" PLYWOOD FROM FINISH FLOOR TO 3'-0" AFF, COORDINATE W/ FLR PLANS
- WOOD TONGUE & GROOVE PLANK SYSTEM START ABOVE STONE SILL, COORDINATE W/ PART TYPES K

M2 WOOD SLAT FURRED WALL AT MILLWORK LOCATIONS
- BACK-UP WALL
- 2-1/2" METAL FURRING 16" OC
- 3/4" PLYWOOD FROM FINISH FLOOR TO TOP OF MILLWORK (SLAT-WALL) VIF – REFER TO DETAILS 3/A727 & 6/A727
- WOOD TONGUE & GROOVE PLANK SYSTEM START ABOVE 3/4" PLYWOOD

PARTITION TYPE M M1 M2

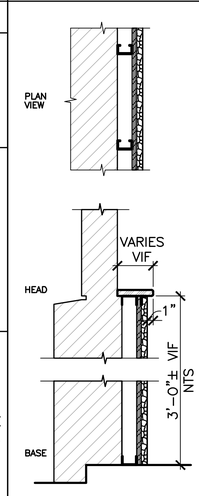

DESCRIPTION

K STONE VENEER W/ STONESILL
- EXTERIOR BACK-UP WALL
- 2-1/2" METAL FURRING 16" OC
- 3/4" PLYWOOD
- 1"± STONE VENEER, REFER TO SPEC. REQUIRED METAL TRIM, SILLS AND REVEALS SHALL BE COORDINATED IN SHOP DRAWINGS PER MFR REQ.
- STONE SILL WITH BULLNOSE, EXTEND 1" BEYOND STONE VENEER, DEPTH VARIES – VIF PROVIDE 3/4"X1-1/2"X1/8"THK CONT. SUPPORT ANGLE REFER TO SPEC. AND WALL SECTIONS

REMARKS

SEE FINISH FLOOR PLANS AND FINISH FLOOR SCHEDULE FOR WALL BASES.

PARTITION TYPE K

AECOM
1 FEDERAL STREET, 8TH FLOOR
BOSTON, MA 02110
617.723.1700
www.aecom.com

STATE OF MAINE
DEPARTMENT OF TRANSPORTATION

	DATE
FED PIN NO: NA	
WIN NO: 017163.02 & 017163.03	

LICENSED ARCHITECT KATYA MICHELLE WENGLER No. 5292 STATE OF MAINE

SIGNATURE	
ARCH. LIN. NUMBER	ARC5292
DATE	JANUARY 17, 2022

PROJECT INFORMATION	
PROGRAM	–
PROJECT MANAGER	–
DESIGNER	AECOM
CONSULTANT	–
PROJECT RESIDENT	–
CONTRACTOR	–
PROJECT COMPLETION DATE	–

MAINE DEPARTMENT OF TRANSPORTATION
ACADIA GATEWAY FACILITY
INTERMODAL AND WELCOME CENTER

PARTITION TYPES II
AND DETAILS

SHEET NUMBER
A831

\\na.aecomnet.com\lfs\AMER\Boston-USBDS01\DCS\Projects\TRN\60653001_MaineDOT_Acadia_Gateway\900_CAD_GIS\910_CAD\Sheet\A831.dwg Jan 17, 2022 - 3:44pm

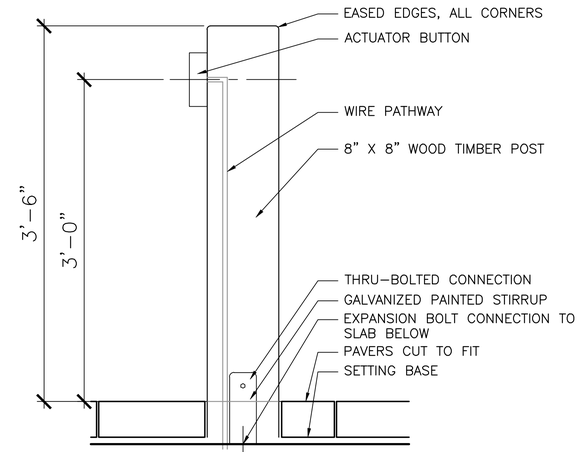

1 FRONT DOOR ACTUATOR STANCHION
1 1/2"=1'-0"

0 6" 1'

AECOM
1 FEDERAL STREET, 8TH FLOOR
BOSTON, MA 02110
617.723.1700
www.aecom.com

STATE OF MAINE
DEPARTMENT OF TRANSPORTATION

	DATE
FED PIN NO: NA	
WIN NO: 017163.02 & 017163.03	

LICENSED ARCHITECT KAYLA MICHELLE WENGLER No. 5292 STATE OF MAINE

SIGNATURE	Kayla Wengler
ARCH. LIN. NUMBER	ARC5292
DATE	JANUARY 17, 2022

PROJECT	INFORMATION
PROGRAM	–
PROJECT MANAGER	–
DESIGNER	AECOM
CONSULTANT	–
PROJECT RESIDENT	–
CONTRACTOR	–
PROJECT COMPLETION DATE	–

MAINE DEPARTMENT OF TRANSPORTATION
ACADIA GATEWAY FACILITY
INTERMODAL AND WELCOME CENTER

MISCELLANEOUS DETAILS

SHEET NUMBER
A832

\\na.aecomnet.com\lfs\AMER\Boston-USBOS01\DCS\Projects\TRN\60653001_MaineDOT_Acadia_Gateway\900_CAD_GIS\910_CAD\Sheet\A832.dwg Jan 17, 2022 - 4:35pm

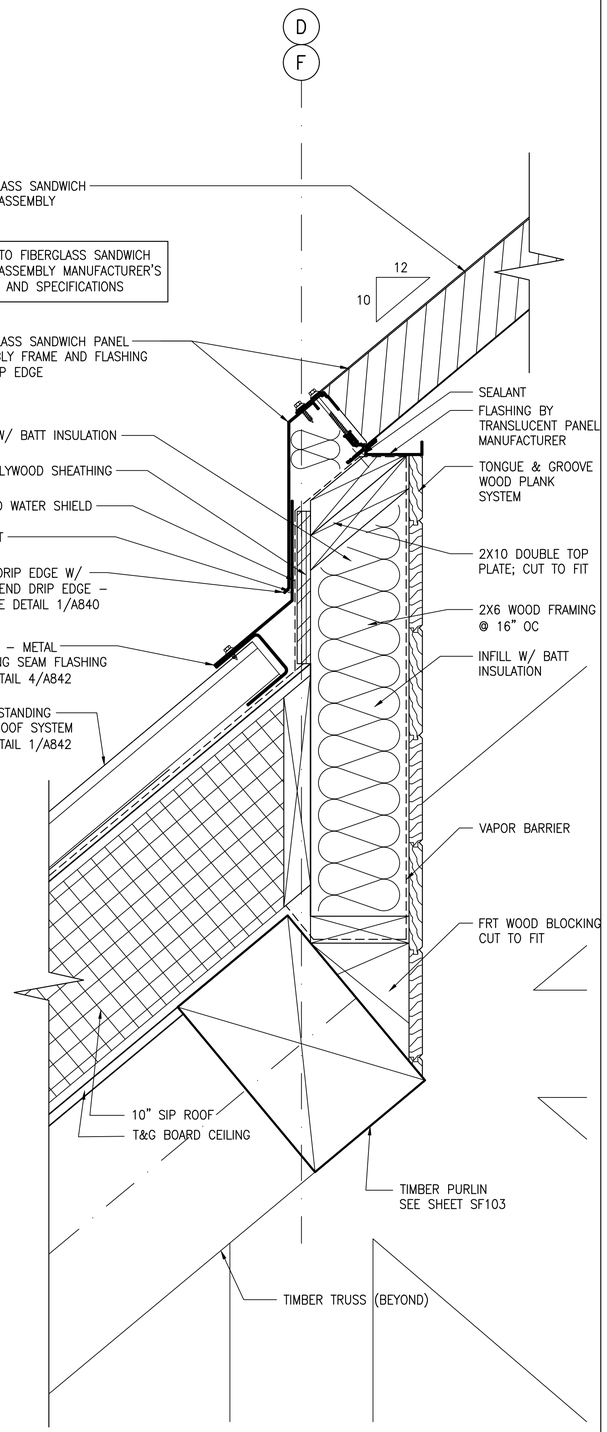

3 SKYLIGHT CURB DETAIL
3"=1'-0"

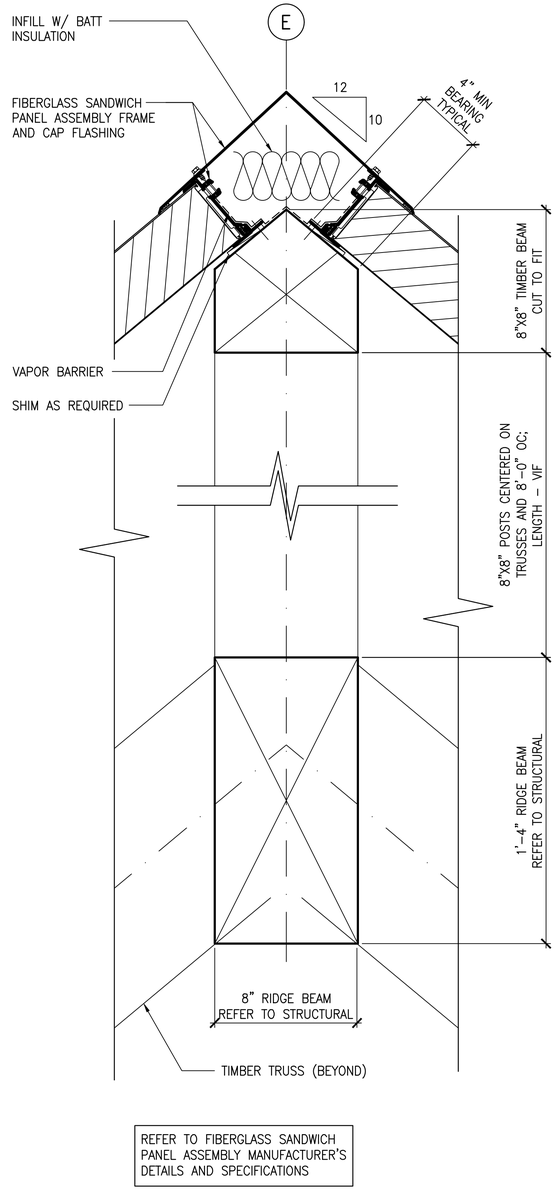

2 SKYLIGHT ROOF RIDGE DETAIL
3"=1'-0"

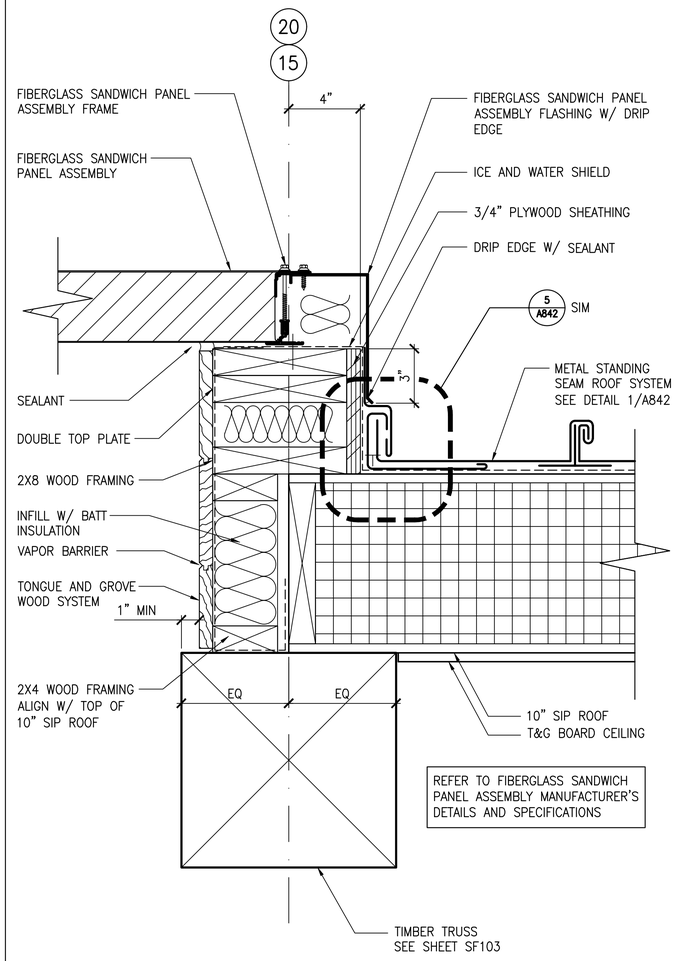

1 SKYLIGHT GABLE END CURB DETAIL
3"=1'-0"

GENERAL NOTES

1. REFER TO NOTES ON SHEET A002.
2. INSTALL ROOF SYSTEM PER MANUFACTURER'S REQUIREMENTS.
3. VERIFY ALL DIMENSIONS IN FIELD.
4. REFER TO ROOF PLAN SHEET A205.

AECOM
1 FEDERAL STREET, 8TH FLOOR
BOSTON, MA 02110
617.723.1700
www.aecom.com

STATE OF MAINE
DEPARTMENT OF TRANSPORTATION

DATE

FED PIN NO: NA
WIN NO: 017163.02 & 017163.03

LICENSED ARCHITECT KARYLA MICHELLE WENGLER No. 5292 STATE OF MAINE

SIGNATURE

ARCH. LIN. NUMBER ARC5292

DATE JANUARY 17, 2022

PROJECT INFORMATION	
PROGRAM	–
PROJECT MANAGER	–
DESIGNER	AECOM
CONSULTANT	–
PROJECT RESIDENT	–
CONTRACTOR	–
PROJECT COMPLETION DATE	–

MAINE DEPARTMENT OF TRANSPORTATION
ACADIA GATEWAY FACILITY
INTERMODAL AND WELCOME CENTER

SKYLIGHT DETAILS

SHEET NUMBER
A840

\\na.aecomnet.com\lfs\AMER\Boston-USBOS01\DCS\Projects\TRN\60653001_MaineDOT_Acadia_Gateway\900_CAD_GIS\910_CAD\Sheet\A840.dwg Jan 19, 2022 - 10:32am

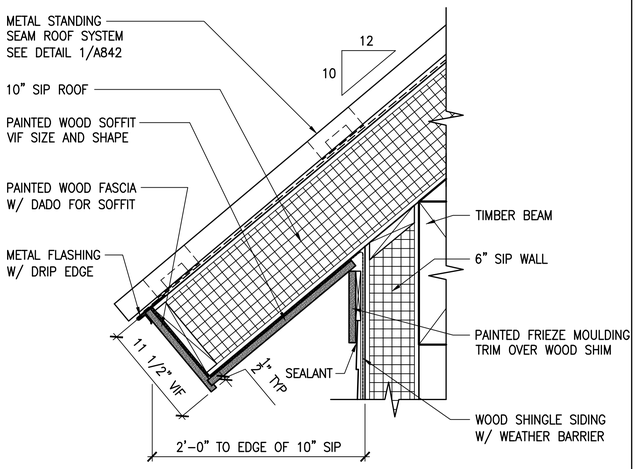

3 TYPICAL EAVE
1 1/2"=1'-0"

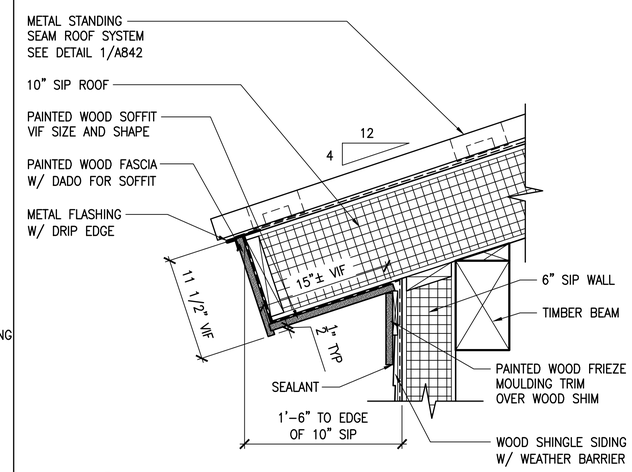

2 EAVE AT DORMER
1 1/2"=1'-0"

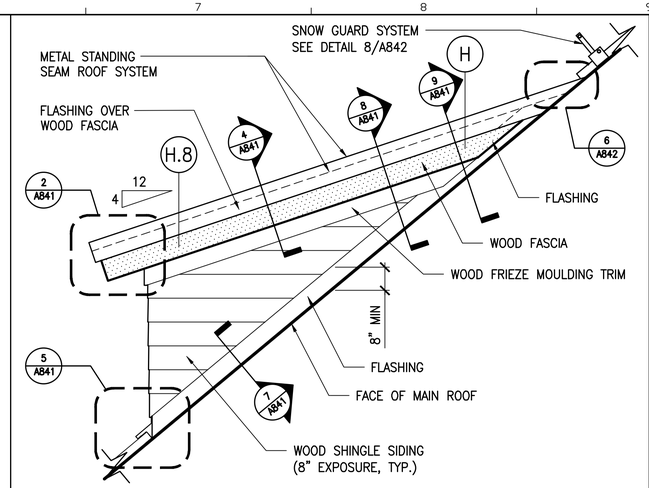

1 GABLE END OVERHANG AT DORMER ELEVATION
1/2"=1'-0"

GENERAL NOTES

1. REFER TO NOTES ON SHEET A002.
2. INSTALL ROOF SYSTEM PER MANUFACTURER'S REQUIREMENTS.
3. VERIFY ALL DIMENSIONS IN FIELD.
4. REFER TO ROOF PLAN SHEET A205.

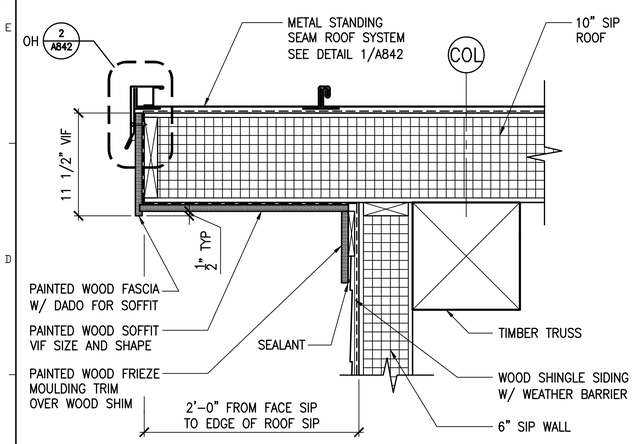

6 TYPICAL GABLE END OVERHANG
1 1/2"=1'-0"

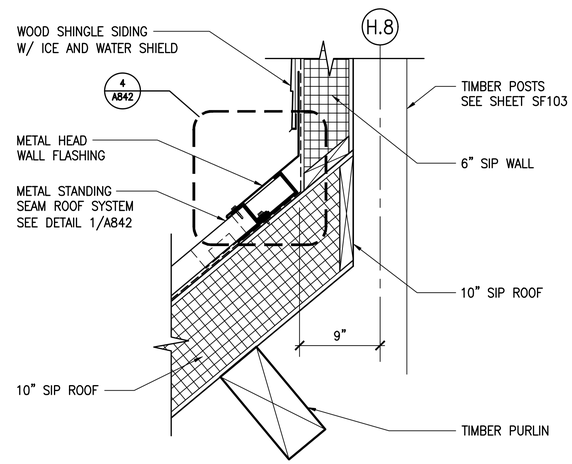

5 DETAIL UNDER DORMER
1 1/2"=1'-0"

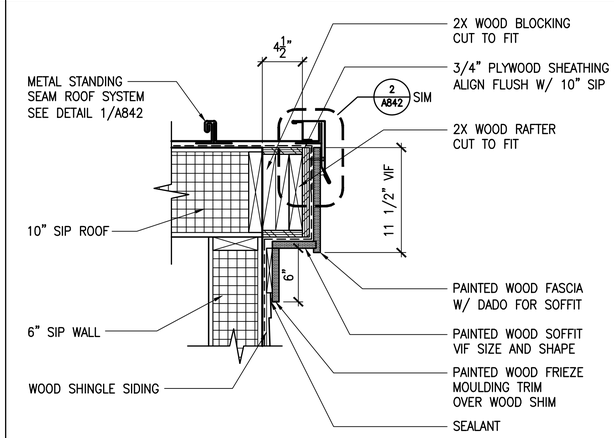

4 GABLE END OVERHANG AT DORMER DETAIL I
1 1/2"=1'-0"

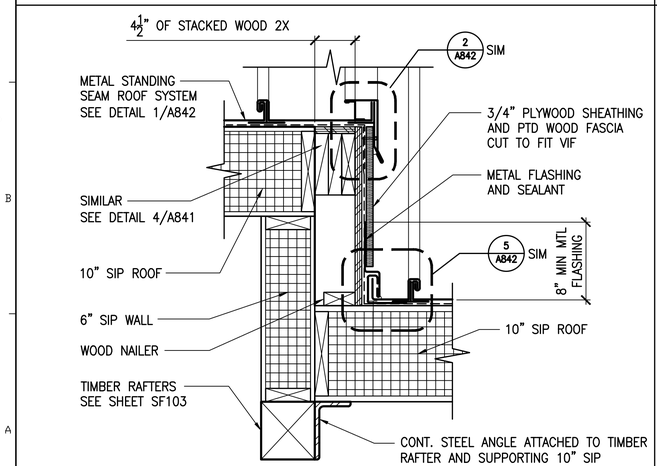

9 GABLE END OVERHANG AT DORMER DETAIL III
1 1/2"=1'-0"

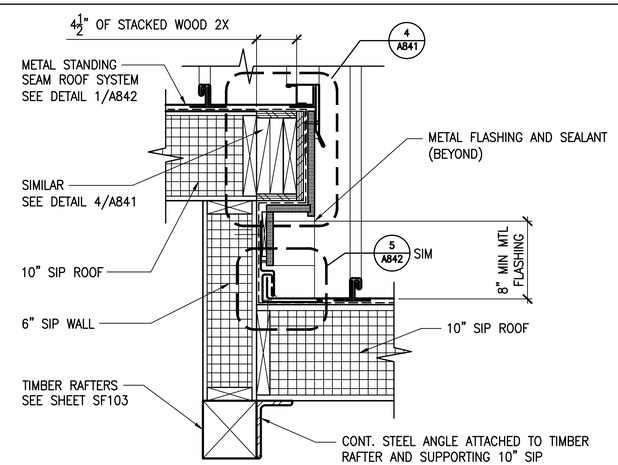

8 GABLE END OVERHANG AT DORMER DETAIL II
1 1/2"=1'-0"

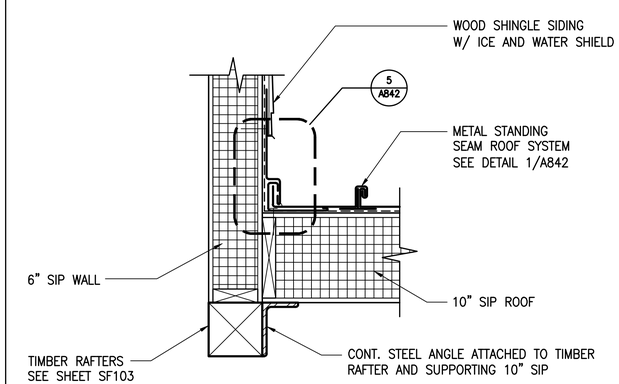

7 DORMER CURB DETAIL
1 1/2"=1'-0"

AECOM
1 FEDERAL STREET, 8TH FLOOR
BOSTON, MA 02110
617.723.1700
www.aecom.com

STATE OF MAINE
DEPARTMENT OF TRANSPORTATION

	DATE

FED PIN NO: NA
WIN NO: 017163.02 & 017163.03

LICENSED ARCHITECT KAYLA MICHELLE WENGLER No. 5292 STATE OF MAINE

INFORMATION	
SIGNATURE	Kayla Wengler
ARCH. LIN. NUMBER	ARC5292
DATE	JANUARY 17, 2022

PROJECT INFORMATION	
PROGRAM	–
PROJECT MANAGER	–
DESIGNER	AECOM
CONSULTANT	–
PROJECT RESIDENT	–
CONTRACTOR	–
PROJECT COMPLETION DATE	–

MAINE DEPARTMENT OF TRANSPORTATION
ACADIA GATEWAY FACILITY
INTERMODAL AND WELCOME CENTER

ROOF DETAILS I

SHEET NUMBER
A841

\\na.aecomnet.com\lfs\AMER\Boston-USBOS01\DCS\Projects\TRN\60653001_MaineDOT_Acadia_Gateway\900_CAD_GIS\910_CAD\Sheet\A841.dwg Jan 17, 2022 - 3:45pm

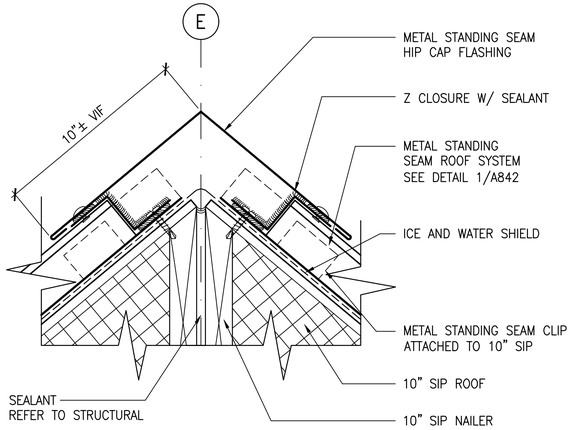

3 FLASHING DETAIL AT ROOF RIDGE
3"=1'-0"

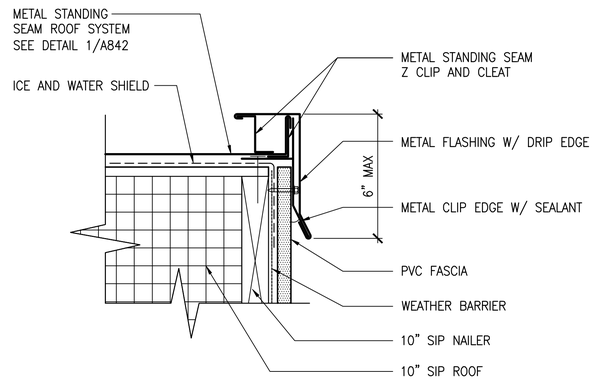

2 FLASHING DETAIL AT EAVE
3"=1'-0"

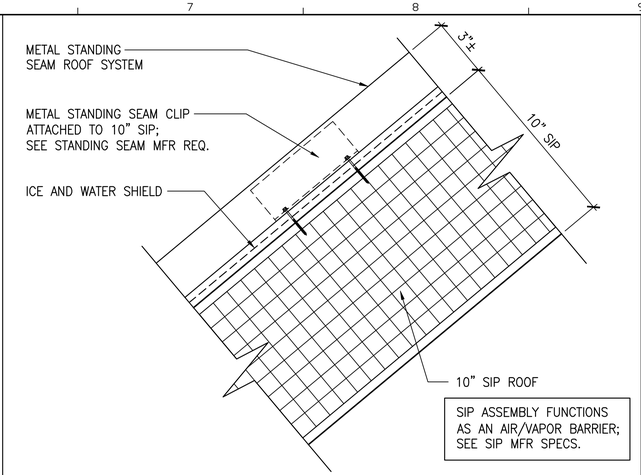

1 METAL STANDING SEAM ROOF SYSTEM COMPONENTS
3"=1'-0"

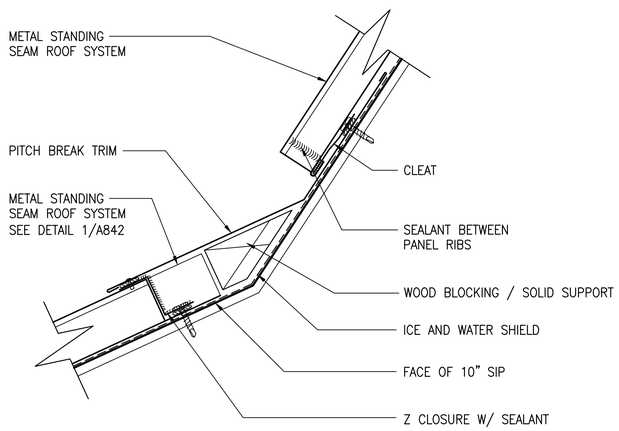

6 FLASHING DETAIL AT SLOPE TRANSITION
3"=1'-0"

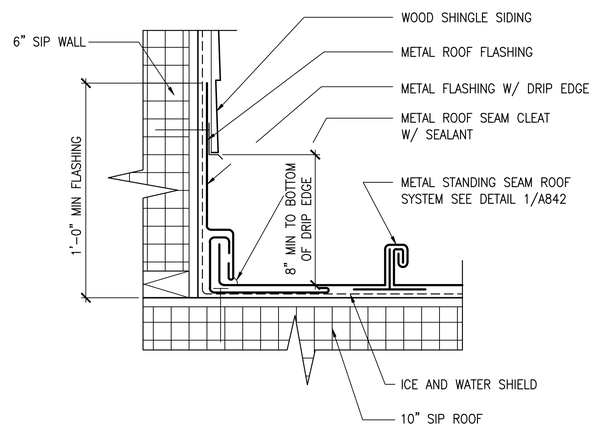

5 FLASHING DETAIL AT CURB
3"=1'-0"

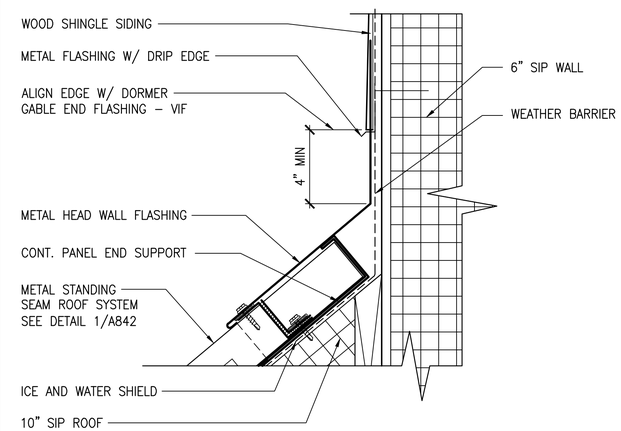

4 FLASHING DETAIL UNDER DORMER
3"=1'-0"

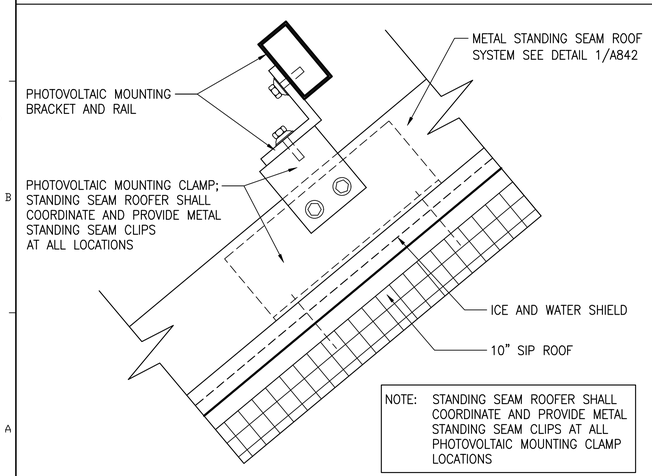

9 PHOTOVOLTAIC MOUNTING DETAIL
6"=1'-0"

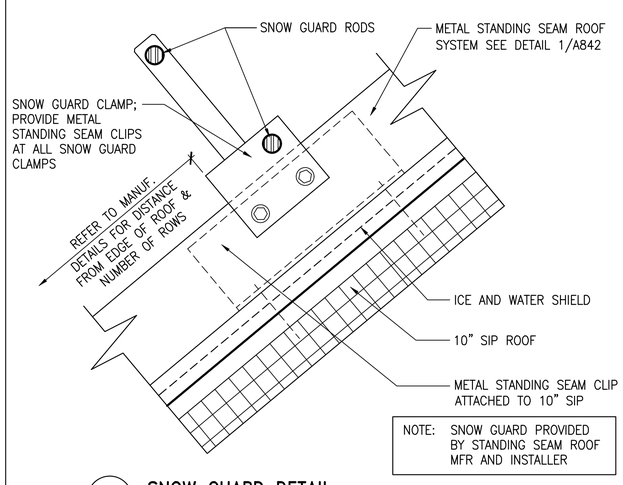

8 SNOW GUARD DETAIL
6"=1'-0"

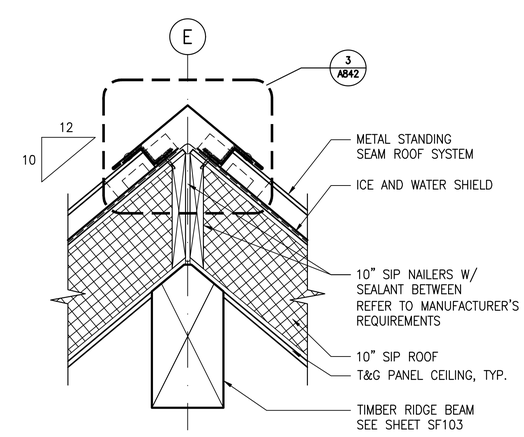

7 ROOF RIDGE DETAIL
1 1/2"=1'-0"

GENERAL NOTES

1. REFER TO NOTES ON SHEET A002.
2. INSTALL ROOF SYSTEM PER MANUFACTURER'S REQUIREMENTS.
3. VERIFY ALL DIMENSIONS IN FIELD.
4. REFER TO ROOF PLAN SHEET A205.

AECOM
1 FEDERAL STREET, 8TH FLOOR
BOSTON, MA 02110
617.723.1700
www.aecom.com

STATE OF MAINE
DEPARTMENT OF TRANSPORTATION

DATE

FED PIN NO: NA

WIN NO: 017163.02 & 017163.03

LICENSED ARCHITECT KATYA MICHELLE WENGLER No. 5292 STATE OF MAINE

SIGNATURE

ARCH. LIN. NUMBER ARC5292

DATE JANUARY 17, 2022

PROJECT INFORMATION	
PROGRAM	–
PROJECT MANAGER	–
DESIGNER	AECOM
CONSULTANT	–
PROJECT RESIDENT	–
CONTRACTOR	–
PROJECT COMPLETION DATE	–

MAINE DEPARTMENT OF TRANSPORTATION
ACADIA GATEWAY FACILITY
INTERMODAL AND WELCOME CENTER

ROOF DETAILS II

SHEET NUMBER
A842

\\na.aecomnet.com\lfs\AMER\Boston-USBOS01\DCS\Projects\TRN\60653001_MaineDOT_Acadia_Gateway\900_CAD_GIS\910_CAD\Sheet\A842.dwg Jan 19, 2022 - 10:35am

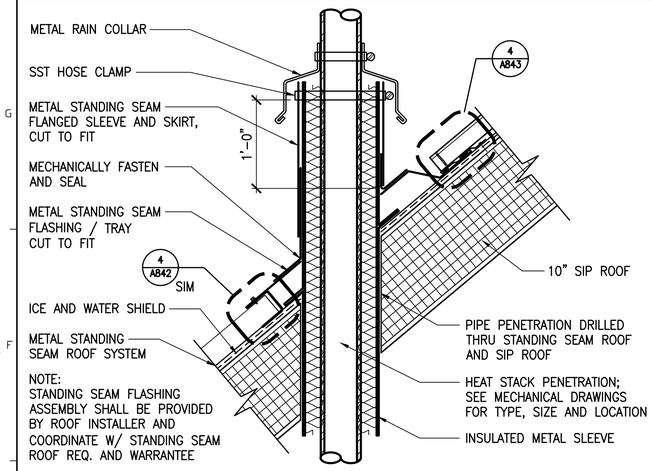

3 HEAT STACK PENETRATION DETAIL
1 1/2"=1'-0"

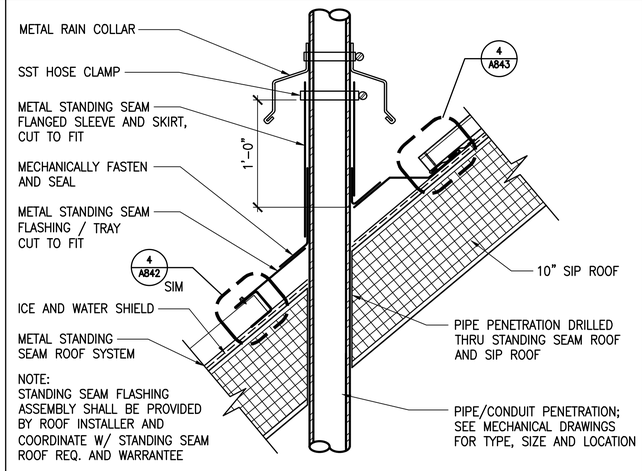

2 PIPE/VENT PENETRATION DETAIL
1 1/2"=1'-0"

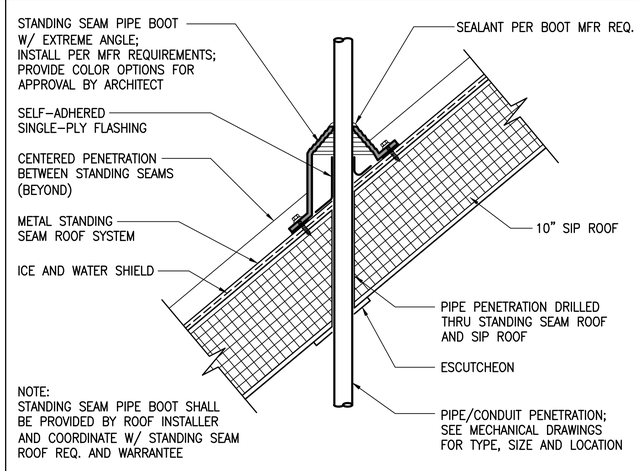

1 PIPE/CONDUIT PENETRATION DETAIL
1 1/2"=1'-0"

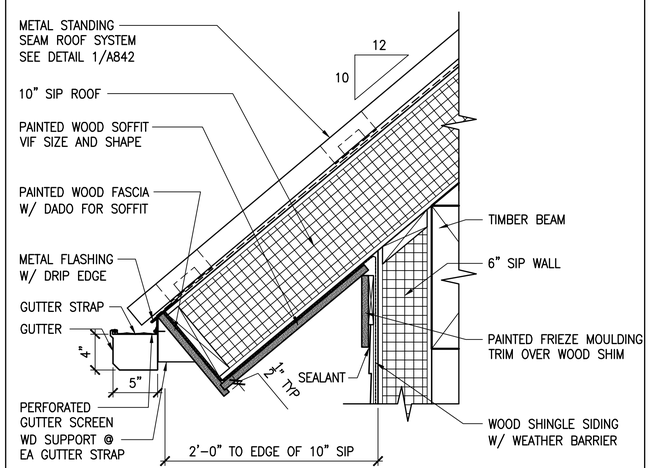

5 TYPICAL EAVE WITH GUTTER
1 1/2"=1'-0"

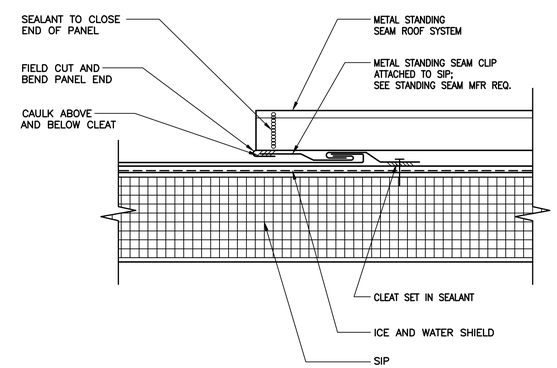

4 STANDING SEAM CLEAT
3"=1'-0"

GENERAL NOTES

1. REFER TO NOTES ON SHEET A002.
2. INSTALL ROOF SYSTEM PER MANUFACTURER'S REQUIREMENTS.
3. VERIFY ALL DIMENSIONS IN FIELD.
4. REFER TO ROOF PLAN SHEET A205.

AECOM
1 FEDERAL STREET, 8TH FLOOR
BOSTON, MA 02110
617.723.1700
www.aecom.com

STATE OF MAINE
DEPARTMENT OF TRANSPORTATION

DATE

FED PIN NO: NA
WIN NO: 017163.02 & 017163.03

LICENSED ARCHITECT KARYLA MICHELLE WENGLER No. 5292 STATE OF MAINE

PROJECT INFORMATION	
PROGRAM	–
PROJECT MANAGER	–
DESIGNER	AECOM
CONSULTANT	–
PROJECT RESIDENT	–
CONTRACTOR	–
PROJECT COMPLETION DATE	–

SIGNATURE
ARCH. LIN. NUMBER ARC5292
DATE JANUARY 17, 2022

MAINE DEPARTMENT OF TRANSPORTATION
ACADIA GATEWAY FACILITY
INTERMODAL AND WELCOME CENTER

ROOF DETAILS III

SHEET NUMBER
A843

\\na.aecomnet.com\lfs\AMER\Boston-USBOS01\DCS\Projects\TRN\60653001_MaineDOT_Acadia_Gateway\900_CAD_GIS\910_CAD\Sheet\A843.dwg Jan 17, 2022 - 2:59pm

MASONRY NOTES:

1. PROVIDE AND INSTALL MASONRY LINTELS FOR MASONRY WALL OPENINGS UNLESS INDICATED OTHERWISE ON DRAWINGS. PROVIDE MASONRY LINTELS OF SIZE AND REINFORCEMENT AS FOLLOWS:
   - A. **OPENINGS UP TO 3'-11" (UNLESS NOTED OTHERWISE):** PROVIDE 8-INCH HIGH C.M.U. LINTEL W/ (2) #4 BARS IN 8-INCH WIDE UNITS
   - B. **OPENINGS 4'-0" TO 8'-0" (UNLESS OTHERWISE NOTED):** PROVIDE 16-INCH HIGH C.M.U. LINTEL W/ (2) #6 BARS IN 8-INCH WIDE UNITS
2. CONCRETE MASONRY LINTELS SHALL HAVE 8-INCH (MIN) END BEARING UNLESS OTHERWISE NOTED.
3. CONCRETE MASONRY BLOCK WALLS WITH VERTICAL REINFORCING SHALL HAVE CORES FILLED WITH 3000 PSI CONCRETE. INSTALLATION OF REINFORCEMENT SHALL BE CONTINUOUS AND RUN UNOBSTRUCTED BY BEARING PLATE ARRANGEMENTS. HORIZONTAL REINFORCEMENT SHALL BE PROVIDED @ 16-INCHES ON-CENTER VERTICALLY.
4. OMIT REBAR/GROUTING IN MASONRY CELLS WHICH SHALL RECEIVE ROOF DRAIN LEADERS, CONDUITS, ETC. REQUIRED REINFORCEMENT SHALL BE INSTALLED IN THE ADJACENT CELL AND SHALL BE GROUTED SOLID.
5. HOLLOW CONCRETE BLOCK UNITS: GRADE N, 1000 PSI, MINIMUM COMPRESSIVE STRENGTH. WALL DESIGN STRENGTH, F'M = 2000 PSI MINIMUM
6. LAY UNITS IN RUNNING BOND - CORNERS SHALL HAVE A STANDARD BOND BY OVERLAPPING UNITS.
7. MORTAR: TYPE S.
8. GROUT: (3000) PSI MINIMUM 28 DAY COMPRESSIVE STRENGTH. ROD GROUT IMMEDIATELY AFTER POURING AND AGAIN APPROX. 5 MINUTES LATER.
9. MAXIMUM GROUT LIFT WITHOUT CLEANOUTS SHALL NOT EXCEED 4'-0" IN BLOCK WALLS.
10. TIE VERTICAL REINFORCING AT EACH END AND AT 8'-0" MAXIMUM VERTICAL SPACING USING SINGLE WIRE AND LOOP TYPE TIES AS MANUFACTURED BY A.A. WIRE PRODUCTS COMPANY OR APPROVED EQUAL.
11. IN 8-INCH WALLS, PROVIDE VERTICAL REINFORCING IN CENTER OF GROUT, AT CENTER OF WALL, CONTINUOUS FULL HEIGHT OF WALL AS FOLLOWS:
   - **A.** **(1) #5 VERTICAL AT CORNERS, INTERSECTIONS, WALL ENDS, JAMBS AND EACH SIDE OF EXPANSION OR CONTROL JOINTS.**
   - **B.** **(1) #5 VERTICAL AT 48-INCHES ON-CENTER TYPICAL. (UNLESS NOTED ON PLAN)**
   - C. **(1) #5 VERTICAL IN EACH CORE WITHIN 12-INCHES OF WALL CORNERS.**
12. PLACE BOND BEAM REINFORCING CONTINUOUS THROUGH EXPANSION AND CONTROL JOINTS, WRAPPING BARS WITH 1/8-INCH THICK BOND BREAKING TAPE 24-INCHES BOTH SIDES OF JOINT. DO NOT SPLICE BOND BEAM REINFORCING WITHIN 6'-0" OF AN EXPANSION OR CONTROL JOINT.
13. PROVIDE CONTINUOUS WIRE LATHE GROUT BARRIERS AS REQUIRED UNDER FIRST COURSE OF GROUTED (3000 PSI CONC.) CELLS.
14. PROVIDE LADDER TYPE #9 JOINT REINFORCING AT 16-INCHES VERTICAL SPACING IN WALLS.
15. WET MASONRY WALLS THOROUGHLY FOR (3) CONSECUTIVE DAYS IMMEDIATELY AFTER PLACEMENT IF TEMPERATURES ARE/WILL BE ABOVE 80°F DURING THE DAY.
16. NO EXPANSION BOLTS SHALL BE ALLOWED IN MASONRY WALLS. (CHEMICAL ANCHORS ONLY)
17. MASONRY LAID IN OUTSIDE AIR TEMPERATURES BELOW 40°F SHALL BE PROTECTED IN ACCORDANCE WITH THE PROVISIONS OF THE "IMIAWC RECOMMENDED PRACTICES AND GUIDE SPECIFICATIONS FOR COLD WEATHER MASONRY".
18. MASONRY BLOCK CORES BELOW FINISH FLOOR SHALL BE FILLED SOLID WITH CONCRETE.

GENERAL NOTES:

1. CONTRACTORS SHALL CONFORM TO SAFETY REQUIREMENTS OF THE OWNER, OSHA SAFETY AND HEALTH STANDARDS, AND OTHER LOCAL AUTHORITIES IN CONNECTION WITH THE PERFORMANCE OF THIS PROJECT.
2. REFERENCED STANDARDS OR PUBLICATIONS SHALL PERTAIN TO THE MOST CURRENT DATA, STANDARD OR PUBLICATION, UNLESS NOTED OTHERWISE.
3. NOTES ON THESE DRAWINGS SHALL NOT SUPERCEDE OR REPLACE INFORMATION PROVIDED IN THE SPECIFICATIONS. ANY INCONSISTENCIES WITH THE DRAWINGS AND SPECIFICATIONS SHALL BE BROUGHT TO THE ATTENTION OF THE ENGINEER PRIOR TO PROCEEDING WITH THE AFFECTED PORTIONS OF THE WORK.
4. STRUCTURAL DRAWINGS SHALL BE USED IN CONJUNCTION WITH THE SPECIFICATIONS, AS WELL AS THE ARCHITECTURAL, MECHANICAL, PLUMBING, ELECTRICAL AND CIVIL DRAWINGS. . ALL DIMENSIONS AND ELVATIONS SHOWN ON STRUCTURAL DRAWINGS, WITH THE EXCEPTION OF STRUCTURAL MEMBER SIZES, ARE GENERATED BY OTHER DISCIPLINES. ANY DIMENSIONS OR ELEVATIONS OMITTED OR NOT SHOWN ON THE STRUCTURAL DRAWINGS SHOULD BE OBTAINED FROM THE DRAWINGS OF THE OTHER DISCIPLINES. ANY INCONSISTENCIES WITH THE DRAWINGS AND SPECIFICATIONS SHALL BE BROUGHT TO THE ATTENTION OF THE ENGINEER PRIOR TO PROCEEDING WITH THE AFFECTED PORTIONS OF THE WORK.
5. IF DIFFERENCES OCCUR WITHIN OR BETWEEN THE DRAWINGS AND SPECIFICATIONS REGARDING MATERIALS , STRENGTHS OR QUANTITIES, THE BETTER, HIGHER STRENGTH, AND GREATER QUANTITY INDICATED, SPECIFIED OR NOTED SHALL BE PROVIDED.
6. THE CONTRACTOR SHALL VISIT THE SITE AT A DESIGNATED TIME APPROVED BY THE OWNER, TO VERIFY EXISTING CONDITIONS, DIMENSIONS, LOCATION OF EXISTING UTILITIES, ETC. THE CONTRACTOR SHALL NOTIFY ENGINEER OF ANY DISCREPANCIES WITHOUT EXCEPTION.
7. THE STRUCTURE HAS BEEN DESIGNED AS A SELF-SUPPORTING SYSTEM ONCE ALL WORK CONTAINED ON THESE DRAWINGS HAS BEEN COMPLETED. THE CONTRACTOR IS SOLELY RESPONSIBLE FOR ERECTION PROCEDURES AND SEQUENCE OF INSTALLATION TO ENSURE SAFETY OF THE BUIDLING AND ITS OCCUPANTS DURING CONSTRUCTION. THE CONTRACTOR SHALL BE RESPONSIBLE FOR MEANS AND METHODS AND TEMPORARY SHORING, PRECAUTIONS DURING BUILDING OPERATIONS, PROTECTION OF PUBLIC AND WORKERS, REMOVAL OF WASTE MATERIAL, PROTECTION OF ADJACENT PROPERTY, PROTECTION OF HAZARDOUS OPENINGS, SAFETY PRECAUTIONS, AND SANITARY PROVISIONS OF EMPLOYEES AND SUBCONTRACTORS AS REQUIRED FOR THE DURATION OF THE CONTRACT.
8. WORK SHALL BE DONE IN AN ORDERLY AND PROFESSIONAL MANNER. THE GENERAL CONTRACTOR IS RESPONSIBLE FOR COORDINATING ALL WORK TO BE DONE BY SUBCONTRACTORS, LOCAL AUTHORITIES, STATE AGENCIES AND/OR UTILITY COMPANIES WHICH MAY HAVE JURISDICTION OVER THIS PROJECT.
9. UTILITY EXTENSIONS AND CONNECTIONS SHALL BE IN ACCORDANCE WITH STATE AND LOCAL CODES OR AS INDICATED BY THE SPECIFICATIONS.
10. CONTRACTOR SHALL REVIEW AND SUBMIT COMPLETE SHOP DRAWINGS FOR ALL SPECIFIED PARTS OF THE WORK, INCLUDING SHORING AND CONSTRUCTION METHODS/SEQUENCING WHERE APPLICABLE. NO PORTION OF THE WORK COVERED BY THESE SHOP DRAWINGS SHALL COMMENCE UNTIL RETURNED APPROVED SHOPS ARE RECEIVED BY THE CONTRACTOR. SEE SPECIFICATIONS FOR SPECIFIC SHOP SUBMITTAL REQUIREMENTS.
11. THE CONTRACTOR IS RESPONSIBLE FOR REPLACING ANY EXISTING ITEMS DAMAGED BY NEW CONSTRUCTION, AND FOR ANY INCIDENTAL REPAIRS OF EXISTING FINISHED SURFACES DISTURBED BY NEW CONSTRUCTION; SUCH REPAIRS SHALL MATCH EXISTING TO THE OWNER'S SATISFACTION.
12. THE CONTRACTOR IS RESPONSIBLE FOR COORDINATING, HANDLING, AND STORAGE OF ITEMS/MATERIALS TO REMAIN THE PROPERTY OF THE OWNER WITH THE OWNER'S REPRESENTATIVE.

SPECIAL INSPECTIONS

1. SPECIAL INSPECTIONS: AN INDEPENDENT INSPECTIONS PROGRAM AND SCHEDULE SHALL BE ARRANGED BY THE BUILDING OWNER AND THE STRUCTURAL ENGINEER OF RECORD.
2. A QUALIFIED PERSON APPROVED BY THE BUILDING OFFICIALS SHALL MAKE SPECIAL INSPECTIONS IN ACCORDANCE WITH CHAPTER 17 OF THE IBC-2015 AND AS DEFINED. SPECIAL INSPECTOR SHALL OBSERVE WORK FOR CONFORMANCE WITH THE APPROVED DRAWINGS AND SPECIFICATIONS.
3. INSPECTION REPORTS SHALL BE FURNISHED TO THE OWNER, BUILDNG OFFICIAL, ARCHITECT AND SER. DISCREPENCIES SHALL BE BROUGHT TO THE ATTENTION OF THE CONTRACTOR AND IF NOT CORRECTED, SHALL BE REORTED TO THE OWNER, BUILDNG OFFICIAL, ARCHITECT AND SER.
4. THE FOLLOWING TYPES OF WORK SHALL RECEIVE SPECIAL INSPECTION OVERSITE: STRUCTRUAL STEEL FABRICATION, ERECTION AND CONNECTIONS, METAL DECK FASTENING, INSTALLATION OF REINFORCING STEEL FOR CONCRETE/MASONRY, ALL CONCRETE/MASONRY PLACEMENT AND STRENGTH TESTING, AND STRUCTURAL FILL PLACEMENT.

FOUNDATIONS:

1. THE SITE SHALL BE PREPARED IN ACCORDANCE WITH THE GEOTECHNICAL REPORT PREPARED BY FGS/CMT, INC., DATED NOVEMBER 2012. FOUNDATION DESIGNS BASED ON THE SOILS REPORT REFERENCED ABOVE. FOUNDATION SYSTEMS HAVE BEEN DESIGNED WITH AN ASSUMED BEARING CAPACITY OF 2,500 PSF. THE ALLOWABLE BEARING PRESSURE SHALL BE VERIFIED BY THE OWNER'S TESTING AGENCY PRIOR TO PLACING FOOTING CONCRETE.
2. FOOTING BOTTOMS SHALL BE INSPECTED AND APPROVED, IN WRITING, BY A REGISTERED SOILS ENGINEER PRIOR TO PLACING CONCRETE. WRITTEN APPROVAL SHALL SPECIFY THAT THE SOIL HAS THE CAPACITY TO SUPPORT THE DESIGNED BEARING PRESSURE.
3. BEDDING AND FILL PROFILES BENEATH SLABS ON GRADE AND FOUNDATION FOOTINGS SHALL COMPLY WITH THE RECOMMENDATIONS PROVIDED IN THE GEOTECHNICAL REPORT REFERENCED ABOVE.
4. FOUNDATION WALL REINFORCING WILL BE ADJUSTED AS REQUIRED NOT TO INTERFERE WITH BASE PLATE ANCHOR BOLTS
5. EXCAVATIONS FOR BUILDING FOUNDATIONS AND STRUCTURES SHALL BE IN ACCORDANCE WITH OSHA REQUIREMENTS. BRACED EXCAVATIONS SHALL BE DESIGNED BY A PROFESSIONAL ENGINEER REGISTERED IN THE PROJECT STATE. DO NOT UNDERMINE EXISTING ADJACENT FOUNDATIONS.
6. INTERSECTING CONCRETE WALLS SHALL BE TIED WITH #4 L-BARS 3'-0" LONG (BENT 18-INCHES – 18-INCHES), SPACED AT 12-INCHES ON-CENTER, OUTSIDE FACE ONLY.
7. IN NO CASE SHALL HEAVY EQUIPMENT BE PERMITTED CLOSER THAN 8'-0" FROM ANY FOUNDATION/BASEMENT WALL. IF THE CONTRACTOR DEEMS IT NECESSARY TO OPERATE SUCH EQUIPMENT CLOSER THAN 8'-0", THE CONTRACTOR SHALL BE SOLELY RESPONSIBLE AND, AT HIS OWN EXPENSE, PROVIDE ADEQUATE SUPPORTS OR WALL BRACES TO WITHSTAND THE ADDITIONAL LOADS SUPERIMPOSED FROM SUCH EQUIPMENT.
8. FOUNDATION WALL CONTROL JOINTS SHALL BE PLACED AT A MAXIMUM SPACING OF 40'-0" (EXTERIOR) AND AT A MAXIMUM SPACING OF 15'-0" (INTERIOR)
9. CONCRETE SHALL NOT BE PLACED ON FROZEN GROUND OR IN WATER.

CONCRETE:

1. CONCRETE WORK SHALL COMPLY WITH ACI 301 "SPECIFICATIONS FOR STRUCTURAL CONCRETE BULILDINGS"; ACI 318 "BUILDING CODE REQUIREMENTS FOR REINFORCED CONCRETE"; AND ACI 315 "ACI DETAIL MANUAL", AND CRSI "MANUAL OF STANDARD PRACTICE" AS REFERENCED IN 2015 IBC.
2. CONTRACTROR SHALL PROVIDE TIES AND BRACING WHERE NECESSARY DURING CONSTRUCTION, TO REMAIN IN PLACE UNTIL THE STRUCTURES ARE COMPLETE.
3. CONCRETE SHALL BE:
   - A. FOOTING AND FOUNDATION WALLS: 3500 PSI AT (28) DAYS. SLUMP SHALL NOT EXCEED 4-INCHES +/- 1 INCH.
   - B. INTERIOR SLABS-ON-GRADE: 3500 PSI CONCRETE AT (28) DAYS. SLUMP SHALL NOT EXCEED 5-INCHES.
   - C. LIGHTWEIGHT FLOOR TOPPINGS SECOND LEVEL: 3500 PSI AT (28) DAYS. SLUMP SHALL NOT EXCEED 5-INCHES +/- 1 INCH.
   - D. EXTERIOR SLABS-ON-GRADE: 4000 PSI CONCRETE AT (28) DAYS. SLUMP SHALL NOT EXCEED 5-INCHES.
   - E. ELEVATED SLABS ON METAL DECK: 3,500 PSI AT (28) DAYS. SLUMP SHALL NOT EXCEED 4-INCH +/-2-INCHES.
   - F. SEE SPECIFICATIONS SECTION 033000 FOR FURTHER CAST-IN-PLACE CONCRETE REQUIREMENTS.
4. SLAB REINFORCEMENT:
   - A. 4-INCH SLABS ON GRADE SHALL BE REINFORCED WITH 6 X 6 X W2.9 X W 2.9 WWM UNLESS OTHERWISE NOTED.
   - B. 5-INCH SLABS ON GRADE SHALL BE REINFORCED WITH #4 BARS AT 18-INCHES ON-CENTER UNLESS OTHERWISE NOTED.
5. WALLS EXCEEDING 90 FEET SHALL CONTAIN EXPANSION JOINTS AT 90 FEET ON CENTER SPACING.
6. FLOOR SLAB CONTROL JOINTS (INCLUDING ELEVATED SLAB) SHALL BE PLACED AS SHOWN ON THE FOUNDATION PLAN (SLAB ON GRADE) OR AS DIRECTED BY THE ENGINEER (ELEVATED SLABS). UNLESS OTHERWISE NOTED, CONTROL JOINTS WILL BE SPACED NOT TO EXCEED 12'-0" ON-CENTER IN BOTH DIRECTIONS AND SHALL BE FILLED WITH SEALANT AT THE COMPLETION OF THE PROJECT.
7. CONTRACTOR WILL CHECK WITH EACH TRADE TO ASSURE CORRECT LOCATION, SIZE, LINE AND ELEVATION OF SLEEVES, BOND-OUTS, ETC. REQUIRED IN CONCRETE FLOORS AND WALLS.
8. THE CONTRACTOR SHALL BE RESPONSIBLE FOR FLOOR DRAIN SETTING FOR ELEVATION AND PLUMBNESS TO ASSURE COMPLETE AREA DRAINAGE.
9. WELDING OF REINFORCEMENT IS NOT PERMITTED.
10. EXPOSED CONCRETE SHALL BE NEATLY FINISH-RUBBED.
11. MECHANICAL EQUIPMENT RESTING ON THE CONCRETE FLOOR SLAB SHALL HAVE A 4-INCH HIGH LIGHTWEIGHT CONCRETE PAD UNDERNEATH, EXTENDING A MINIMUM OF 6-INCHES BEYOND UNIT EDGE (EACH DIRECTION), REINFORCED WITH #3 BARS AT 18-INCHES ON-CENTER EACH WAY.
12. STRUCTURAL STEEL BELOW FINISH FLOOR SHALL RECEIVE (2) COATS OF BITUMINOUS MASTIC.
13. ADMIXTURES CONTAINING CALCIUM CHLORIDE SHALL NOT BE USED. CONCRETE SHALL NOT BE IN DIRECT CONTACT WITH ALUMINUM.
14. PROVIDE IN SLABS ON GRADE (2) BARS 4'-0" LONG AT EACH REENTRANT CORNER AND BOTH SIDES OF DOOR OPENING.
15. REFER TO ACI 318 (LATEST EDITION) FOR MINIMUM CONCRETE COVER FOR REINFORCING STEEL.
16. UNLESS OTHERWISE NOTED, REINFORCING LAP SPLICES SHALL BE ACI CLASS B SPLICES USING THE FOLLOWING LAP LENGTHS:

BAR SIZE:	3	4	5	6	7	8	9
LAP (IN.):	22	29	36	43	63	72	80

17. COORDINATE SLAB DEPRESSIONS WITH ARCHITECTURAL DRAWINGS.
18. SLAB THICKNESSES (ELEVATED OR ON-GRADE) INDICATED ON THE DRAWINGS ARE MINIMUMS. PROVIDE SUFFICIENT CONCRTETE TO ACCOUNT FOR STRUCTURE DEFLECTION AND/OR SUBGRADE FLUCTUATIONS IN ORDER TO OBTAIN SPECIFIED SLAB ELEVATIONS AT THE FLATNESS AND LEVELNESS INDICATED IN THE SPECIFICATION.
19. DRILLED-IN ANCHOR BOLTS OR REBAR DOWELS SHALL BE INSTALLED AS FOLLOWS:
   - A. LOCATE ANCHOR BOLTS OR DOWELS TO AVOID CUTTING EXISTING REBAR.
   - B. DEPTH IS BASED ON A CLEAN HOLE WITH ROUGH SIDES. ROTARY PERCUSSION EQUIPMENT AND COURSE ROCK CUTTING CHISELS ARE RECOMMENDED. DIAMOND CORE BITS SHOULD BE AVOIDED AS EMBEDMENT LENGTHS MAY NEED TO BE INCREASED. HOLE SIZE TO BE PER MANUFACTURER'S RECOMMENDATIONS.
   - C. CLEAN HOLES WITH COMPRESSED AIR OR VACUUM, REMOVE ANY FREE-STANDING WATER AND ALLOW HOLE TO DRY.
   - D. GROUT ANCHOR BOLTS OR DOWELS WITH HILTI HIT HY-150 ADHESIVE IN ACCORDANCE WITH MANUFACTURER'S RECOMMENDATIONS. (HILTI HVA ADHESIVE CAPSULE MAY BE SUBSTITUTED FOR THE HILTI HIT HY-150 ADHESIVE.)

FIELD TESTING

1. BOLTED CONNECTIONS: 100% OF COMPONENTS AND FASTENERS IN SLIP CRITICAL CONNECTIONS, AS IDENTIFIED IN THE PROJECT CONTRACT DOCUMENTS SHALL BE VISUALLY INSPECTED AND TESTED FOR TIGHTNESS IN ACCORDANCE WITH AISC SPECIFICATIONS FOR STRUCTURAL JOINTS, PARTS 8 AND 9.
2. CHECK BY CALIBRATION TORQUE WRENCH 25% OF BOLTS IN EACH NON-SC SHEAR CONNECTION BUT NOT LESS THAN (2) PER CONNECTION.
3. FIELD WELDED CONNECTIONS: PERFORM TESTING IN ACCORDANCE WITH ANSI/AWS D1.1, CHAPTER 6.
4. CONDUCT TESTING OF 10% OF WELDS ON STRUCTURAL STEEL BY DYE PENETRATION OR MAGNETIC PARTICLE TESTING.
5. CONDUCT TESTING OF 100% OF GROOVE, PLUG, OR SLOT WELDS IN STRUCTURAL STEEL BY ULTRASONIC TESTING OR OTHER NONDESTRUCTIVE TESTING APPROVED BY ENGINEER OF RECORD.
6. RADIOGRAPHICALLY TEST 5% OF ALL FULL PENETRATION WELDS.
7. WELDED SHEAR STUDS: 10% OF STUDS SHALL BE TESTED BY BENDING OR TORQUEING IN ACCORDANCE WITH ANSI/AWS D1.1 SECTION 7.8.
8. THE STRUCTURAL FABRICATOR AND ERECTOR SHALL SCHEDULE ALL WORK TO ALLOW THE ABOVE INSPECTION AND TESTING REQUIREMENTS TO BE COMPLETED

WOOD NOTES:

1. GENERAL:
   - A. TIMBER FRAMING SHALL BE IN ACCORDANCE WITH THE AITC TIMBER CONSTRUCTION MANUAL – LATEST EDITION, AND THE AF & PA NATIONAL DESIGN SPECIFICATION FOR WOOD CONSTRUCTION (NDS) LATEST EDITION.
   - B. TIMBER SIZES NOTED ON DRAWINGS SHALL BE ACTUAL MEMBER SIZES.
   - C. EACH PIECE OF LUMBER SHALL BE "S-DRY" AND BEAR THE GRADE STAMP OF A GRADING RULES AGENCY APPROVED BY THE AMERICAN LUMBER STANDARDS COMMITTEE.
   - D. DOUBLE UP STUDS AT JAMBS AND UNDER BEAMS UNLESS POSTS ARE NOTED ON PLANS.
   - E. DO NOT NOTCH OR DRILL JOISTS, BEAMS OR LOAD BEARING STUDS WITHOUT APPROVAL.
   - F. PROVIDE OPENING HEADERS AS INDICATED ON DRAWINGS.
2. CONNECTIONS:
   - A. FOLLOW TABLE 2304.10.1 OF THE 2015 INTERNATIONAL BUILDING CODE FOR NAILING REQUIREMENTS NOT INDICATED ON THESE DRAWINGS.
   - B. GLUE FLOOR PLYWOOD TO ALL FRAMING MEMBERS AND NAIL WITH 10D COMMON NAILS AT 6-INCHES ON-CENTER AT PLYWOOD EDGES AND BOUNDARY MEMBERS AND 10-INCHES ON-CENTER AT INTERMEDIATE SUPPORTS.
   - C. PROVIDE METAL HANGERS BY SIMPSON STRONGTIE AT FLUSH FRAMING CONDITIONS.
   - D. PROVIDE METAL POST CAPS BY SIMPSON STRONGTIE AT BEAM TO POST CONNECTIONS.
3. STRUCTURAL SAWN LUMBER:
   - A. 2 X 6 THRU 2 X 14 JOISTS: SPRUCE PINE FIR NO. 1 WITH FB (REPETITIVE) = 1200 P.S.I.
   - B. STUDS: SPRUCE PINE FIR NO. 1 GRADE, Fb (REPETITIVE) = 1,200 PSI, Fc = 1,100 PSI
4. LAMINATED VENEER LUMBER (LVL & PSL):
   - A. BEAMS/HEADERS: Fb = 3,100 PSI, Fv = 285 PSI, E = 2,100 KSI.
   - B. POSTS/COLUMNS: PARALLAM PSL, Fb = 2,900 PSI, Fc = 2,500 PSI, E = 2,200 KSI.
   - C. NAIL MULTIPLE BUILT-UP MEMBER WITH 3 ROWS OF 16d NAILS @ 12-INCHES ON-CENTER (UNO).
   - D. PROVIDE SHOP DRAWINGS INDICATING POST AND BEAM LOCATIONS AND CONNECTOR SIZES. PROVIDE MANUFACTURER'S LOADING DATA FOR EACH ITEM.
5. ENGINEERED FLOOR JOISTS: (BY TRUS-JOIST OR APPROVED EQUAL)
   - A. JOISTS SHALL BEAR 2-INCH MINIMUM AT SUPPORTING WALLS.
   - B. PROVIDE SHOP DRAWINGS INDICATING JOIST LOCATIONS, HEADER LOCATIONS AND CONNECTOR SIZES. PROVIDE MANUFACTURORS LOADING DATA FOR EACH ITEM.
   - C. PROVIDE SOLID BLOCKING OR SQUASH BLOCKS AT BEARING POINTS WHERE LOADS EXIST ABOVE SUPPORT.
   - D. PROVIDE WEB STIFFINERS PER MANUFACTURER'S RECOMMENDATIONS AT BEARING POINTS INCLUDING POST / BEARING WALL LOADS FROM ABOVE.
6. PLYWOOD:
   - A. SUB-FLOORING: C-D INT-APA (PS 1) WITH EXTERIOR GLUE: 3/4" WITH IDENTIFICATION INDEX 36/16. LAY UP WITH FACE GRAIN PERPENDICULAR TO SUPPORTS. STAGGER JOINTS. EACH PLYWOOD PIECE SHALL BE CONTINUOUS OVER A MINIMUM OF TWO SPANS WITH A MINIMUM WIDTH OF 1'-0" UNLESS BLOCKING IS PROVIDED AT JOINTS.
   - B. EACH PLYWOOD PIECE SHALL BE CONTINUOUS OVER A MINIMUM OF TWO SPANS WITH A MINIMUM WIDTH OF 1'-0" UNLESS BLOCKING IS PROVIDED AT JOINTS.

STRUCTURAL NOTES:

1. STRUCTURAL STEEL SHALL BE DESIGNED USING THE 13TH EDITION OF THE AISC STEEL CONSTRUCTION MANUAL. STEEL BEAMS SHALL CONFORM TO ASTM A992, FY = 50 KSI, MISCELLANEOUS PLATES, SHAPES, CHANNELS, ANGLES ETC. SHALL CONFORM TO ASTM A36, FY = 36KSI. ALL STEEL SUPPORTING MECHANICAL EQUIPMENT AND TO RECEIVE FIREPROOFING SHALL BE UNPAINTED AND UNPRIMED. STEEL TUBING: COLD-FORMED STEEL TUBING COMPLYING WITH ASTM A500. STEEL PIPE: ASTM A53, STANDARD WEIGHT (SCHEDULE 40), UNLESS ANOTHER WEIGHT IS INDICATED OR REQUIRED BY STRUCTURAL LOADS.
2. SEE ARCHITECTURAL WALL SECTIONS AND DETAILS FOR MISCELLANEOUS STEEL.
3. STEEL FLOOR DECK SHALL BE FASTENED TO STEEL BEAMS, BAR JOIST, AND PERIMETER ANGLES PER DIVISION 5 OF SPECIFICATIONS AND STRUCTURAL DETAILS.
4. PROVIDE L4 X 4 X ¼" SLAB SUPPORT ANGLE AS REQUIRED AT COLUMNS WHERE STRUCTURAL MEMBERS DO NOT FRAME IN AT ALL FOUR SIDES.
5. UNLESS NOTED OTHERWISE, BASE PLATE ANCHOR BOLTS IN NEW CONSTRUCTION SHALL BE
   - A. ANCHOR RODS: 3/4" Ø ASTM F1554 GRADE 36
   - B. NUTS: ASTM A563, GRADE A
   - C. WASHERS: ASTM F4367
6. INSPECTION REPORTS SHALL BE FURNISHED TO THE OWNER, BUILDING OFFICIAL, ARCHITECT AND SER. DISCREPANCIES SHALL BE BROUGHT TO THE ATTENTION OF THE CONTRACTOR AND IF NOT CORRECTED, SHALL BE REPORTED TO THE OWNER, BUILDING OFFICIAL, ARCHITECT AND SER.

CONNECTIONS:

1. FIELD CONNECTIONS SHALL BE FIELD BOLTED WITH A325N HIGH STRENGTH BOLTS (U.N.O.) EXCEPT WHERE SLIP CRITICAL CONNECTIONS ARE REQUIRED AND NOTED BY A325 (SC) ON THE DRAWINGS. WASHERS SHALL CONFORM TO ASTM F436, NUTS SHALL CONFORM TO ASTM A563 PROVIDE SLIP CRITICAL (SC) CONNECTIONS AT ALL MOMENT CONNECTIONS, BRACED FRAMES, RELIEVING ANGLES AND WHERE OTHERWISE NOTED.
2. SLIP CRITICAL (S.C.) BOLTED CONNECTIONS SHALL BE CHECKED AND INSPECTED USING ONE OF THE FOLLOWING:
   - A. TURN OF THE NUT
   - B. CALIBRATED WRENCH
   - C. ALTERNATE DESIGN FASTENER
   - D. DIRECT TENSION INDICATOR
   - E. OTHER BOLTED CONNECTIONS SHALL BE TIGHTENED TO "SNUG TIGHT" CONDITION UNLESS NOTED OTHERWISE.
3. UNLESS NOTED OTHERWISE, CONNECTIONS SHALL BE WELDED OR BOLTED WITH 3/4-INCH DIAMETER BOLTS (BEARING TYPE, DESIGNATION N, THREADS IN SHEAR PLANE) BEAM TO COLUMN CONNECTIONS SHALL BE FULL DEPTH (BOLT SPACING 3" ON-CENTER).
4. OVERSIZE OR SLOTTED HOLES SHALL NOT BE USED FOR ANY CONNECTIONS UNLESS SPECIFICALLY INDICATED ON THE DRAWINGS OR APPROVED IN WRITING BY ENGINEER OF RECORD.
5. MINIMUM NUMBER OF BOLTS PER CONNECTION SHALL BE 2.
6. ALTERNATE CONNECTIONS WILL BE ACCEPTED ONLY WITH THE WRITTEN APPROVAL OF THE ENGINEER OF RECORD; HOWEVER, THE ENGINEER SHALL BE THE SOLE JUDGE OF ACCEPTABILITY. THE CONTRACTOR'S BID SHALL ANTICIPATE THE USE OF THOSE SPECIFIC DETAILS SHOWN ON THE DRAWINGS. IN ANY EVENT THE CONTRACTOR SHALL BE RESPONSIBLE FOR THE DESIGN OF SUCH ALTERNATE DETAILS.
7. WELDS INDICATED SHALL BE THE MINIMUM WELD SIZED SPECIFIED BY THE AISC MANUAL OF STEEL DESIGN (SINGLE PASS AS REQUIRED). ALL BUTT AND FULL PENETRATION WELDS SHALL BE MADE USING RUN OFF TABS THAT SHALL BE REMOVED AND GROUND SMOOTH AFTER WELD IS COMPLETED. ALL WELD BACK UP BARS SHALL BE REMOVED AND GROUND SMOOTH AFTER WELD IS COMPLETED.
8. SHOP CONNECTIONS, UNLESS NOTED OTHERWISE, SHALL BE WELDED. UNLESS OTHERWISE INDICATED ON THE DRAWINGS, BEAM CONNECTION CAPABILITIES SHALL BE CALCULATED IN ACCORDANCE WITH AISC'S "THE STEEL CONSTRUCTION MANUAL", 13TH EDITION, FOR EACH SHEAR CONNECTION PROVIDE THE GREATER OF THE FOLLOWING SHEAR CAPACITIES:
   - A. BEAMS: SUPPORT A REACTION ® EQUAL TO HALF TOTAL UNIFORM LOAD CAPACITY OF BEAM FOR GIVEN SHAPE, SPAN AND STEEL SPECIFICATION (AISC) WITH EFFECT OF CONCENTRATED LOADS ACCOUNTED FOR OR THE (UNFACTORED) REACTIONS SHOWN ON PLAN, WHICHEVER IS GREATER.
   - B. COMPOSITE BEAMS: NOTED [#] – NUMBER OF SHEAR STUDS; R = REQUIRED REACTION CAPACITY; W = FROM AISC 13th EDITION TABLE 3-6 "MAXIMUM TOTAL UNIFORM LOADS FOR GIVEN SPAN (SEE PLANS) USING ASD; C = AS NOTED BELOW.

     R = (W/3) X C
     - a. FOR W12 OR SMALLER; C=2.25
     - b. FOR W14 TO W21; C=2.00
     - c. FOR W24; C=1.75
     - d. FOR W27 OR DEEPER; C=1.50
9. CONNECTION DESIGN IS THE RESPONSIBILITY OF THE FABRICATOR FOR OTHER THAN THE STANDARD CONNECTIONS NOTED ON DETAIL. CONNECTIONS CALCULATIONS SHALL BE SIGNED, SEALED BY A PE REGISTERED IN THE PROJECT STATE AND SUBMITTED FOR REVIEW WITH THE SHOP DRAWINGS. SEE PROJECT SPECIFICATIONS FOR ADDITIONAL REQUIREMENTS. PARTIAL SUBMITTAL PACKAGES SHALL BE RETURNED. CONNECTION DESIGN SHALL BE PERFORMED USING ALLOWABLE STRENGTH DESIGN.

DESIGN LOADS:

1. BUILDING CODE:
   - A. INTERNATIONAL BUILDING CODE – 2015 EDITION
   - B. ASCE 7-10 MINIMUM DESIGN LOADS FOR BUILDINGS AND OTHER STRUCTURES
2. MINIMUM LOADING REQUIREMENTS:
   - A. RISK CATEGORY II
   - B. ROOF SNOW LOADS: LOADS: (EXCEPT AT DRIFTING SNOW LOCATIONS AND THOSE LISTED BELOW)
     - a. GROUND SNOW LOAD: P_G = 60.0 PSF
       1. IMPORTANCE FACTOR: I = 1.0
       2. COLD ROOF SLOPE FACTOR: C_S = 0.93
       3. THERMAL FACTOR: C_T = 1.1
       4. EXPOSURE FACTOR: C_E = 1.0
       5. TERRAIN CATEGORY: C
     - b. ROOF SNOW LOAD: P_S = 43.0PSF
     - c. DRIFT – AS INDICATED ON THE DRAWINGS.
   - C. ROOF DEAD LOAD:
     - a. TYPICAL: 25.0 PSF.
     - b. ALLOWANCE FOR FUTURE PV PANELS ON ENTIRE ROOF SURFACE: 5.0 PSF
   - D. ROOF LIVE LOAD:
     - a. STANDARD ROOF LIVE LOAD: 20 PSF
   - E. FLOOR DEAD LOAD:
     - a. FIRST FLOOR (5-1/2" CONCRETE SLAB/1-1/2" METAL DECK): 65 PSF
     - b. SECOND FLOOR (W/O 2" CONCRETE TOPPING): 10 PSF
     - c. SECOND FLOOR (W/ 2" CONCRETE TOPPING): 35 PSF
     - d. SECOND FLOOR (W/ 2" CONCRETE TOPPING/4" HOUSEKEEPING PAD) MECHANICAL ROOM 203: 75PSF
   - F. FLOOR LIVE LOADS:

FLOOR LIVE LOADS	UNIFORM	CONCENTRATED	PARTITION
a. CORRIDORS 1ST FLOOR	100 PSF		
b. OFFICES			
1. OFFICES	50 PSF	2,000#	15 PSF
2. CORRIDORS ABOVE 1ST FLOOR	80 PSF	2,000#	
c. LIBRARIES			
1. READING ROOMS	60 PSF	1,000#	
2. CORRIDORS ABOVE 1ST FLOOR	80 PSF	1,000#	
d. STORAGE			
1. LIGHT (INCLUDING STORAGE ROOM 204)	125 PSF		
e. MECHANICAL MEZZANINE	65 PSF	1,000#	
f. ACCESSIBLE CEILINGS	20 PSF	250#	

   - G. WIND:
     - a. FACTORS:
       1. BASIC WIND SPEED: 116 MPH ULTIMATE
       2. EXPOSURE CATEGORY: "C"
       3. BUILDING HEIGHT: < 60 FEET
     - b. WIND DESIGN PRESSURE

Wind Design Data

Ultimate Wind Speed:	116 mph	Nominal Wind Speed:	90 mph
Risk Category:	II	Wind Exposure:	C
Enclosure Classification:	Enclosed	End Zone Width:	8.50 ft.
Internal Pressure Coefficient:		0.18 +/-	

Components and Cladding Design Pressures			
	Roof Zone 1:	+31.1 psf max.,	-34.0 psf min.
	Roof Zone 2:	+31.1 psf max.,	-39.7 psf min.
	Roof Zone 3:	+31.1 psf max.,	-39.7 psf min.
	Roof at Zone 2 Overhangs:		-57.5 psf min.
	Roof at Zone 3 Overhangs:		-57.5 psf min.
	Wall Zone 4:	+34.0 psf max.,	-36.8 psf min.
	Wall Zone 5:	+34.0 psf max.,	-45.4 psf min.

The Ultimate Wind Speed was used to determine the above Component and Cladding Design Pressures.

   - H. SEISMIC
     - a. COEFFICIENTS:
       1. RESPONSE SPECTRAL ACC. (0.2 SEC.): S_S = 0.189G
       2. RESPONSE SPECTRAL ACC. (1.0 SEC.): S_1 = 0.069G
       3. SOIL CLASSIFIATION: D
       4. SITE COEFFICIENTS: F_A = 1.6; F_V = 2.4
       5. MAX. CONSIDERED EARTHQUAKE ACC @ 5% DAMPED DESIGN: S_{DS} = 0.202; S_{D1} = 0.110
       6. BUILDING CATEGORY: II
       7. IMPORTANCE FACTOR: 1.0
       8. SEISMIC DESIGN CATEGORY FOR 0.1 AND 1.0 SECONDS: B
       9. FUNDAMENTAL PERIOD: T_A = 0.33 SEC
       10. SEISMIC RESPONSE COEFFICIENT: C_S = 0.101
       11. SEISMIC BASE SHEAR: V =80 KIPS (EQUIVALENT LATERAL FORCE PROCEDURE)
     - b. DESIGN COEFFICIENTS AND FACTORS FOR SEISMIC FORCE RESISTING SYSTEMS
       1. B24– LIGHT FRAMED WALLS WITH SHEAR PANELS OF ALL OTHER MATERIALS
          - A. RESPONSE MODIFICATION: R = 2.5
          - B. SYSTEM OVERSTRENGTH FACTOR: Ω_0 = 2.5
          - C. DEFLECTION AMPLIFICATION FACTOR: C_D = 2.5
       2. LIGHT FRAMED WALLS SHEATHED WITH WOOD STRUCTURAL PANELS RATED FOR SHEAR RESISTANCE
          - A. RESPONSE MODIFICATION: R = 7
          - B. SYSTEM OVERSTRENGTH FACTOR: Ω_0 = 2.5
          - C. DEFLECTION AMPLIFICATION FACTOR: C_D = 4.5
       3. HEAVY TIMBER BRACED FRAME (REF. TFEC 1-2019)
          - A. RESPONSE MODIFICATION: R = 3
          - B. SYSTEM OVERSTRENGTH FACTOR: Ω_0 = 3
          - C. DEFLECTION AMPLIFICATION FACTOR: C_D = 4
       4. ORDINARY MASONRY SHEAR WALLS — **BASIS OF DESIGN**
          - A. RESPONSE MODIFICATION: R = 2
          - B. SYSTEM OVERSTRENGTH FACTOR: Ω_0 = 2.5
          - C. DEFLECTION AMPLIFICATION FACTOR: C_D = 2

Allied Engineering
Structural Mechanical Electrical Plumbing
160 Veranda Street
Portland, Maine 04103
P: 207.221.2260
F: 207.221.2266
Web:www.allied-eng.com
Allied Project No: 12069 Cad File: 12069S.rvt

AECOM
1 FEDERAL STREET, 8TH FLOOR
BOSTON, MA 02110
617.723.1700
www.aecom.com

STATE OF MAINE
DEPARTMENT OF TRANSPORTATION
DATE
FED PIN NO: NA
PIN NO: 017163.02 & 017163.03

STATE OF MAINE WILLIAM P. FAUCHER No. 7133 PROFESSIONAL ENGINEER

SIGNATURE
P.E. NUMBER 7133
DATE JANUARY 17, 2022

PROJECT INFORMATION
PROGRAM
PROJECT MANAGER
DESIGNER AECOM
CONSULTANT ALLIED ENGINEERING
PROJECT RESIDENT
CONTRACTOR
PROJECT COMPLETION DATE

MAINE DEPARTMENT OF TRANSPORTATION
ACADIA GATEWAY FACILITY
INTERMODAL AND WELCOME CENTER
STRUCTURAL – GENERAL INFORMATION

SHEET NUMBER
S000

Username:
Division:
Date:
Filename:

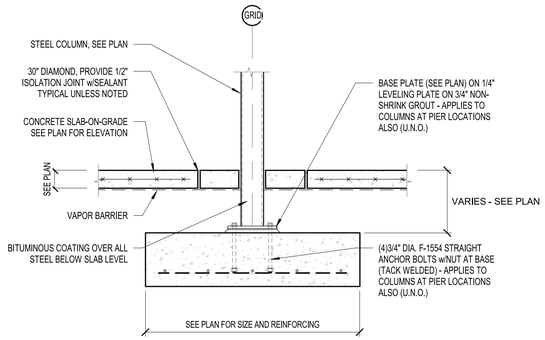

F1 TYPICAL INTERIOR SPREAD FOOTING DETAIL

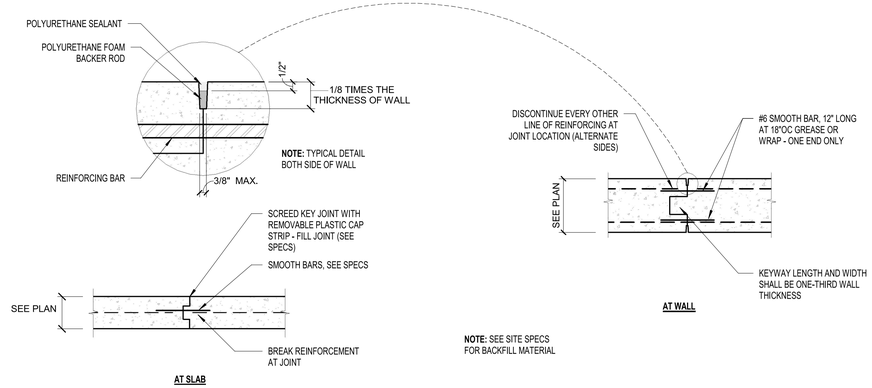

F4 TYPICAL WALL AND SLAB CONSTRUCTION JOINT DETAIL

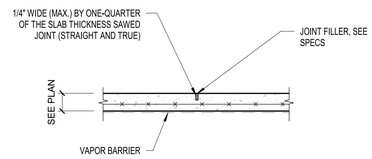

G9 TYPICAL CONTROL JOINT IN SLAB DETAIL

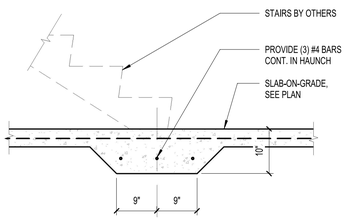

D1 THICKENED SLAB DTL @ STAIR BASE

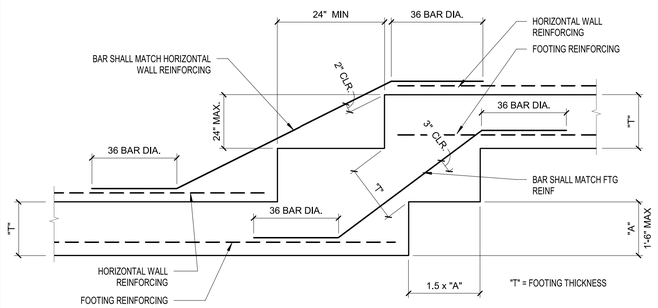

D4 TYPICAL STEPPED FOOTING DETAIL

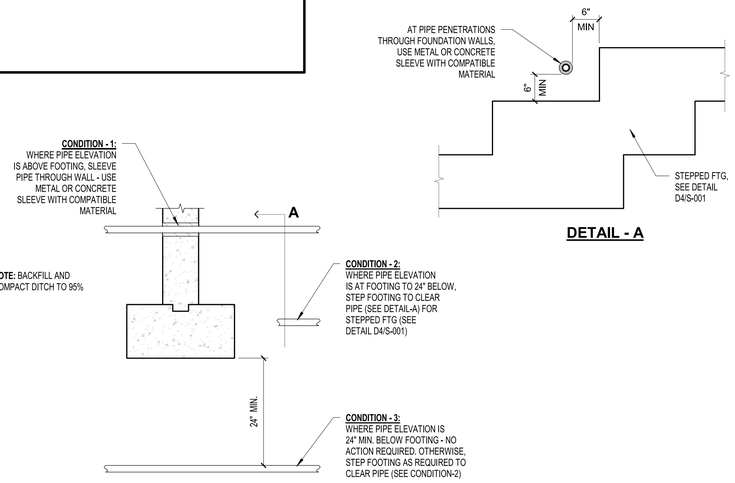

D7 TYPICAL PIPE AT FOOTING DETAIL

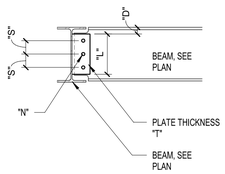

BEAM-TO-BEAM DETAIL

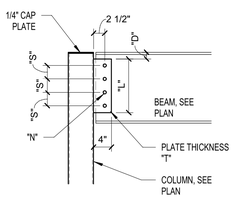

BEAM-TO-COLUMN DETAIL

CONNECTION SCHEDULE

BEAM	N	L	T	D	S	CAPACITY (KIP)
W8	2	6"	1/4"	1"	3"	16.3
W10	2	6"	1/4"	1 1/2"	3"	16.3
W12	3	9"	1/4"	1 1/2"	3"	25.6
W14	4	11 1/2"	3/8"	1 1/2"	3"	42.4
W16	4	12"	3/8"	1 1/2"	3"	42.4
W18	5	15"	3/8"	1 1/2"	3"	53.0
W21	6	18"	3/8"	1 1/2"	3"	63.6
W24	7	20 1/2"	3/8"	1 1/2"	3"	74.2

NOTES:

1. BOLTS SHALL BE 3/4" DIA. A325N (U.N.O.)
2. N = NUMBER OF BOLTS
3. L = LENGTH OF PLATE
4. T = THICKNESS OF PLATE
5. D = DEPTH OF PLATE FROM TOP FLANGE OF BEAM
6. S = BOLT SPACING
7. SIMILAR AT CHANNEL SECTIONS OF SAME DEPTH

A1 TYPICAL CONNECTION DETAIL

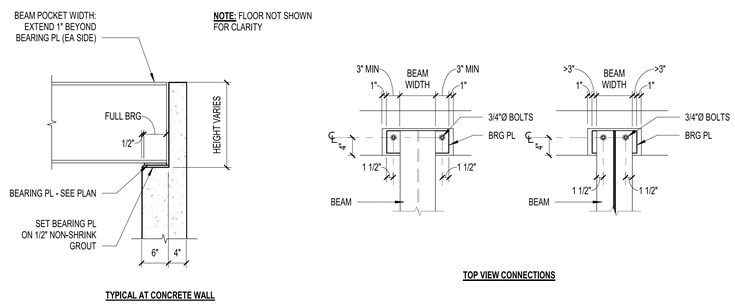

C3 TYPICAL BEAM POCKET DETAIL

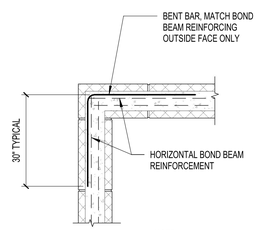

C6 TYP. BOND BEAM @ CORNER

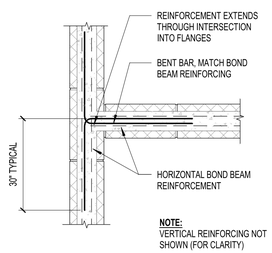

A5 TYP. BOND BEAM @ WALL INTERSECTION

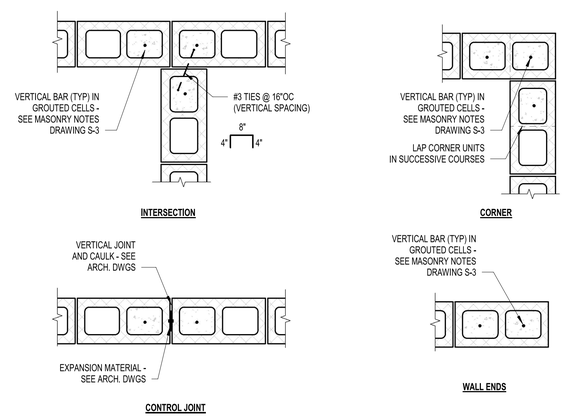

B8 TYPICAL CMU REINFORCING DETAILS

Allied Engineering
Structural Mechanical Electrical Plumbing
160 Veranda Street
Portland, Maine 04103
P: 207.221.2260
F: 207.221.2266
Web:www.allied-eng.com

AECOM
1 FEDERAL STREET, 8TH FLOOR
BOSTON, MA 02110
617.723.1700
www.aecom.com

Allied Project No: 12069 | Cad File: 12069S.rvt

STATE OF MAINE
DEPARTMENT OF TRANSPORTATION

DATE

FED PIN NO: NA
PIN NO: 017163.02 & 017163.03

STATE OF MAINE
WILLIAM P. FAUCHER
No. 7133
LICENSED
PROFESSIONAL ENGINEER

SIGNATURE

P.E. NUMBER 7133

DATE JANUARY 17, 2022

PROJECT INFORMATION

PROGRAM	–
PROJECT MANAGER	–
DESIGNER	AECOM
CONSULTANT	ALLIED ENGINEERING
PROJECT RESIDENT	–
CONTRACTOR	–
PROJECT COMPLETION DATE	–

MAINE DEPARTMENT OF TRANSPORTATION
ACADIA GATEWAY FACILITY
INTERMODAL AND WELCOME CENTER

STRUCTURAL – TYPICAL DETAILS

SHEET NUMBER
S001

Filename: – Division: – Date: – Username: –

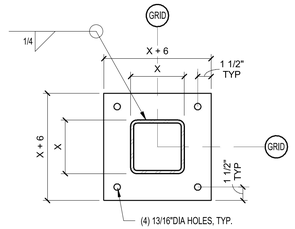

BASE PLATE TYPE "B-1"
(3/4"Ø A. BOLTS w/9" EMBED)

BASE PL MARKER LEGEND

BASE PLATE THICKNESS CHART:

A = 1"

B = 2"

C = 2 1/2"

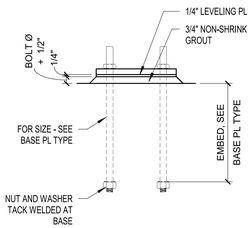

G1	BASE PLATE TYPES
1 1/2" = 1'-0"	

1. FINISH SLAB ELEVATION = 83.5' (NOMINALLY REFERRED TO 0'-0" IN THESE DRAWINGS) UNLESS NOTED OTHERWISE.
2. TOP OF WALL ELEVATION = 0'-0" UNLESS NOTED OTHERWISE
3. TOP OF FOOTING SHALL BE 4'-0" MIN. BELOW FINISHED GRADE
4. AT EMERGENCY ELECTRICAL ROOM CMU WALLS PROVIDE 12" THICKENED SLAB. PROVIDE DOWELS #4 x 16" LONG @ 48"OC, AT EACH CORNER CELL AND JAMB CELL - EMBED DRILL AND DROP 4" MIN INTO HAUNCH

F-# INDICATES FOOTING TYPE - SEE D9/SB100 FOR SCHEDULE

P-# INDICATES CONCRETE PIER - SEE D9/SB100 FOR SCHEDULE

B-#X INDICATES BASE PLATE TYPE - SEE G1/SB100

C-# INDICATES COLUMN TYPE - SEE D9/SB100 FOR SCHEDULE

INDICATES CONTROL JOINT IN SLAB

INDICATES AREA TO BE GROUTED SOLID AFTER COLUMN PLACEMENT, MATCH TOP OF ADJACENT CONCRETE WALL

FOOTING SCHEDULE

MARK	SIZE	REINFORCING
F-1	3'-0" x 3'-0" x 1'-0"	(5)#4 BARS, EW - BOTTOM
F-3	4'-0" x 4'-0" x 1'-0"	(9)#4 BARS, EW - BOTTOM
F-4	4'-0" x 4'-0" x 1'-2"	(4)#5 BARS, EW - TOP AND BOTTOM
F-5	4'-6" x 4'-6" x 1'-2"	(10)#4 BARS, EW - BOTTOM
F-7	5'-6" x 5'-6" x 1'-4"	(9)#5 BARS, EW - TOP AND BOTTOM
F-8	6'-0" x 6'-0" x 1'-4"	(9)#5 BARS, EW - TOP AND BOTTOM
F-9	7'-0" x 7'-0" x 1'-6"	(11)#6 BARS, EW - BOTTOM

PIER SCHEDULE

MARK	SIZE	REINFORCING
P-1	12 x 12	(4)#5 BARS VERTICAL w/#3 TIES @ 12"O.C.
P-2	16 x 24	(8)#5 BARS VERTICAL w/#3 TIES @ 12"OC
P-3	19 x 24	(8)#5 BARS VERTICAL w/#3 TIES @ 12"OC
P-4	24 x 24	(8)#6 BARS VERTICAL w/#3 TIES @ 12"O.C.

COLUMN SCHEDULE

MARK	SIZE
C-1	HSS6X6X5/8
C-2	HSS8X8X1/2
C-7	5 1/4 x 7 PSL
C-9	6 x 6 TIMBER
C-10	6 x 12 TIMBER
C-11	8x8 TIMBER
C-13	12x12 TIMBER

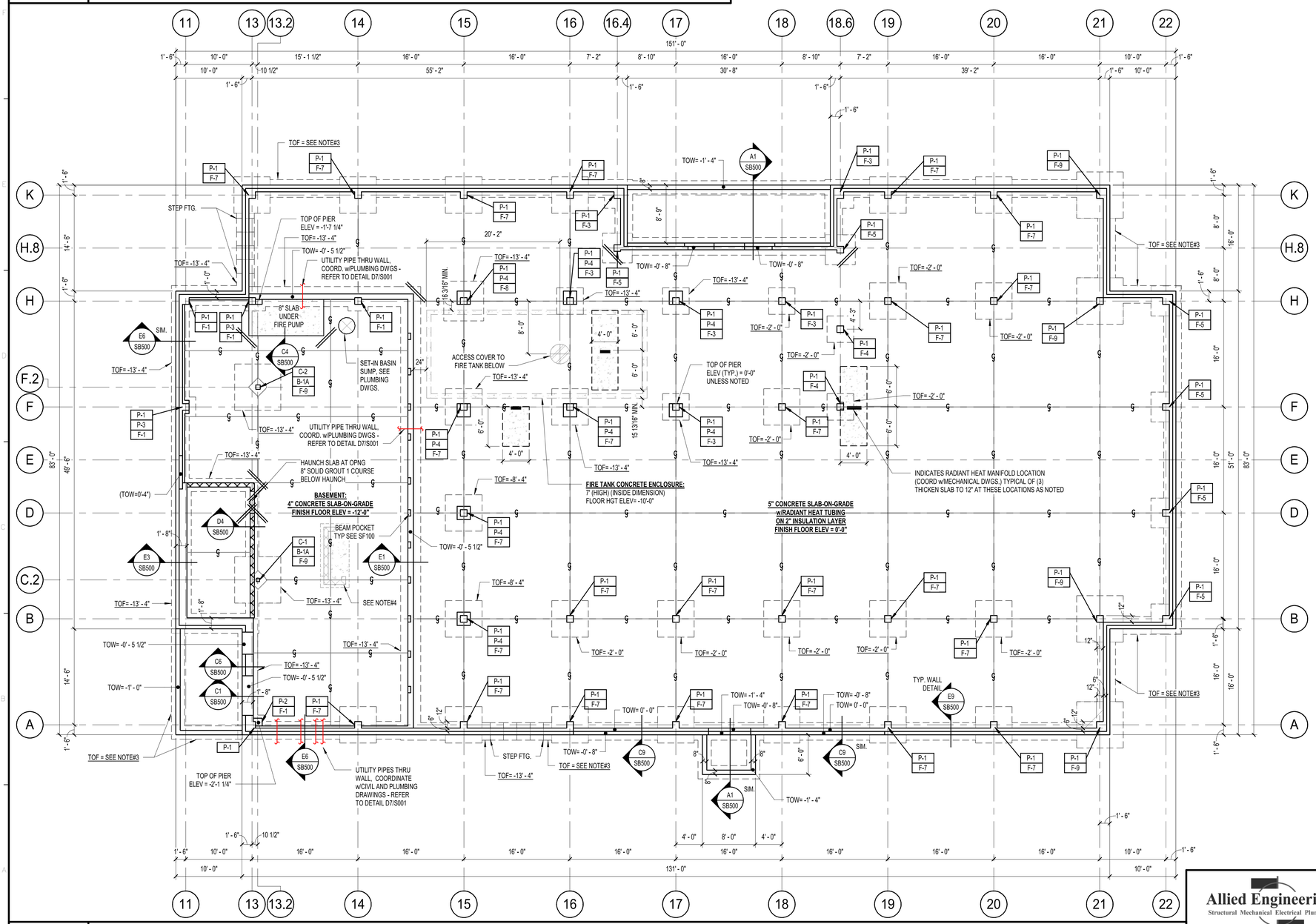

A1	STRUCTURAL ~ FOUNDATION PLAN
1/8" = 1'-0"	

Allied Engineering
Structural Mechanical Electrical Plumbing
160 Veranda Street
Portland, Maine 04103
P: 207.221.2260
F: 207.221.2266
Web:www.allied-eng.com

Allied Project No: 12069 | Cad File: 120695.rvt

PROJECT KEY PLAN

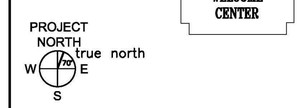

AECOM
1 FEDERAL STREET, 8TH FLOOR
BOSTON, MA 02110
617.723.1700
www.aecom.com

STATE OF MAINE
DEPARTMENT OF TRANSPORTATION

DATE

FED PIN NO: NA

PIN NO: 017163.02 & 017163.03

STATE OF MAINE
WILLIAM P. FAUCHER
No. 7133
PROFESSIONAL ENGINEER

SIGNATURE

P.E. NUMBER 7133

DATE JANUARY 17, 2022

PROJECT INFORMATION		
PROGRAM	–	–
PROJECT MANAGER	–	–
DESIGNER	AECOM	–
CONSULTANT	ALLIED ENGINEERING	–
PROJECT RESIDENT	–	–
CONTRACTOR	–	–
PROJECT COMPLETION DATE	–	–

MAINE DEPARTMENT OF TRANSPORTATION

ACADIA GATEWAY FACILITY

INTERMODAL AND WELCOME CENTER

STRUCTURAL – FOUNDATION PLAN

SHEET NUMBER

SB100

Filename: –
Date: –
Division: –
Username: –

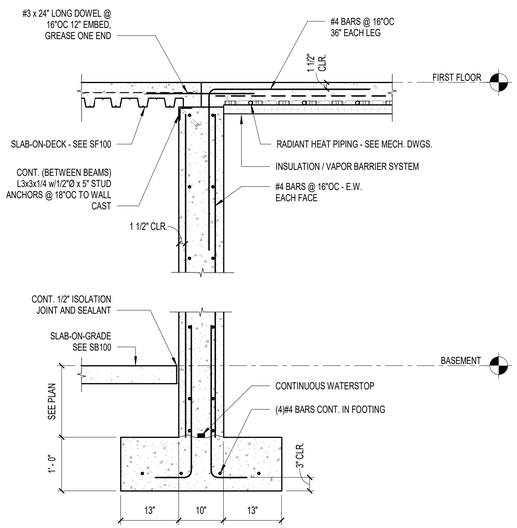

E1	TYPICAL 10" INTERIOR BASEMENT WALL
3/4" = 1'-0"	

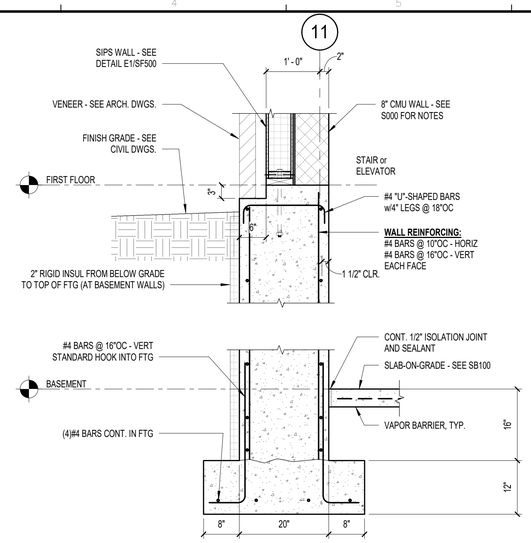

E3	TYPICAL 20" FDN WALL AT BASEMENT
3/4" = 1'-0"	

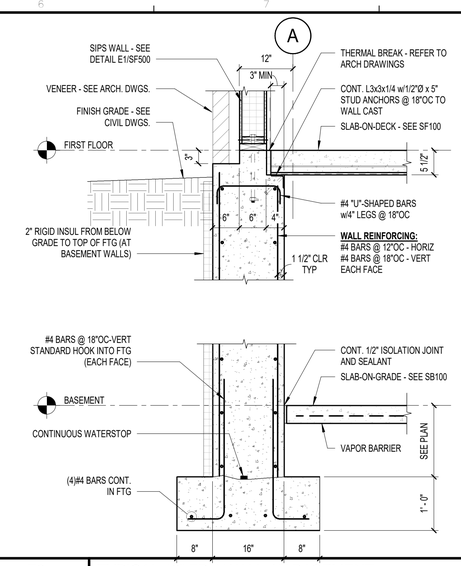

E6	TYPICAL 16" FDN WALL AT BASEMENT
3/4" = 1'-0"	

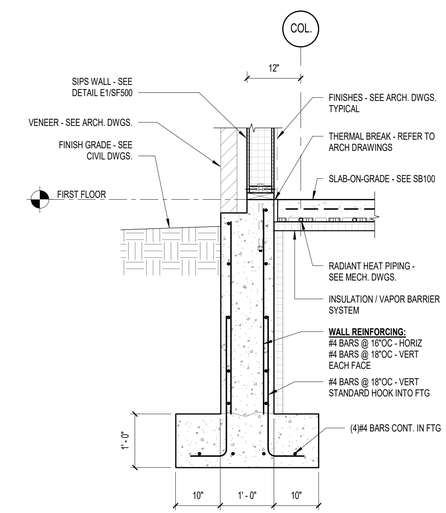

E9	TYPICAL FOUNDATION WALL DETAIL
3/4" = 1'-0"	

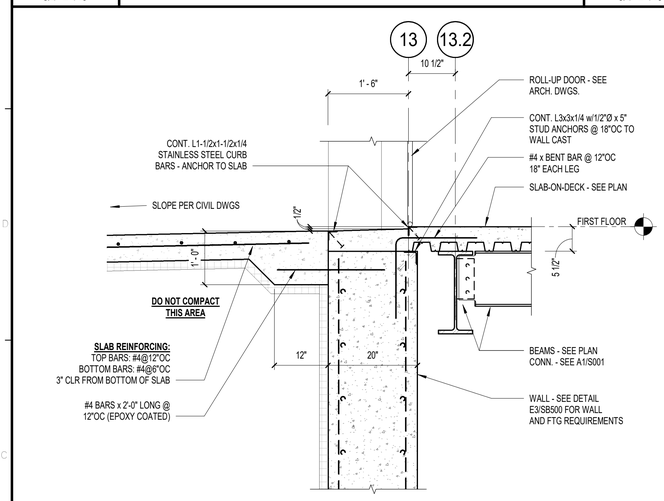

C1	DETAIL
3/4" = 1'-0"	

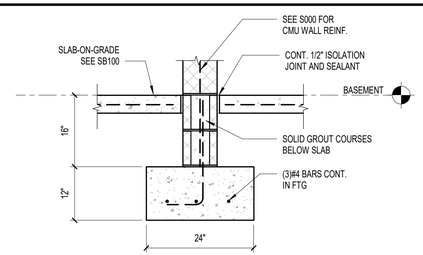

D4	DETAIL AT CMU WALL
3/4" = 1'-0"	

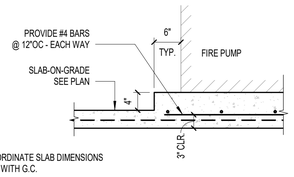

C4	8" SLAB UNDER FIRE PUMP
3/4" = 1'-0"	

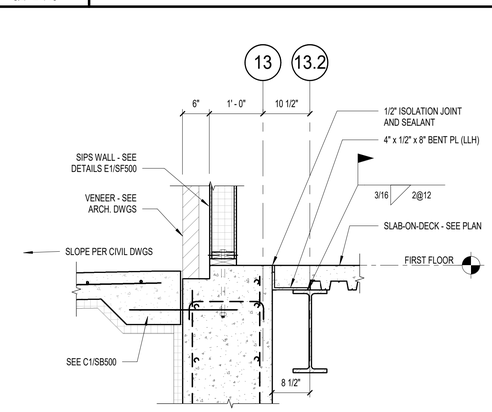

C6	DETAIL
3/4" = 1'-0"	

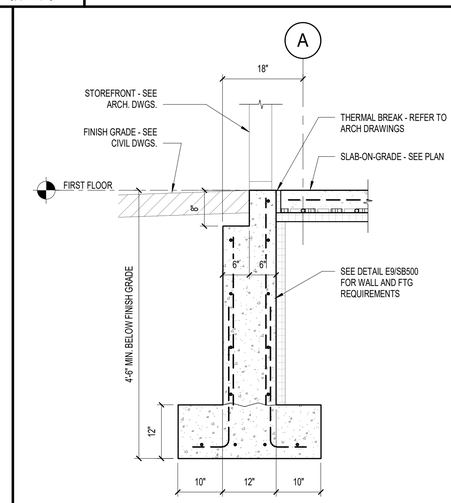

C9	DETAIL
3/4" = 1'-0"	

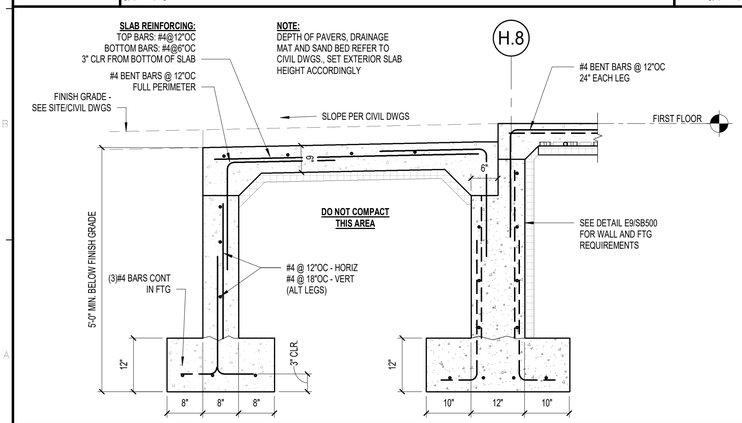

A1	DETAIL
3/4" = 1'-0"	

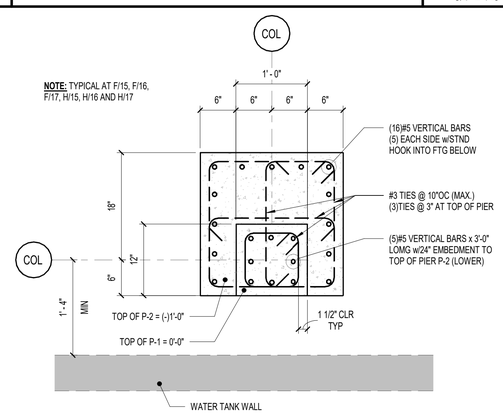

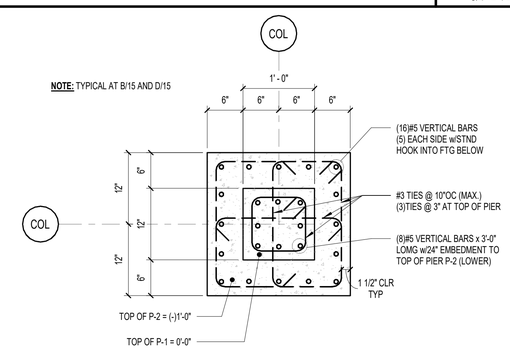

A4	P-1 TO P-2 DETAILS
1" = 1'-0"	

Allied Engineering
Structural Mechanical Electrical Plumbing
160 Veranda Street
Portland, Maine 04103
P: 207.221.2260
F: 207.221.2266
Web:www.allied-eng.com

Allied Project No: 12069 | Cad File: 12069S.rvt

AECOM
1 FEDERAL STREET, 8TH FLOOR
BOSTON, MA 02110
617.723.1700
www.aecom.com

STATE OF MAINE
DEPARTMENT OF TRANSPORTATION

	DATE

FED PIN NO: NA
PIN NO: 017163.02 & 017163.03

STATE OF MAINE · WILLIAM P. FAUCHER No. 7133 · PROFESSIONAL ENGINEER

SIGNATURE
P.E. NUMBER 7133
DATE JANUARY 17, 2022

PROJECT INFORMATION

PROGRAM	
PROJECT MANAGER	
DESIGNER	AECOM
CONSULTANT	ALLIED ENGINEERING
PROJECT RESIDENT	
CONTRACTOR	
PROJECT COMPLETION DATE	

MAINE DEPARTMENT OF TRANSPORTATION
ACADIA GATEWAY FACILITY
INTERMODAL AND WELCOME CENTER
STRUCTURAL – FOUNDATION DETAILS

SHEET NUMBER
SB500

Username:
Division:
Date:
Filename:

FIRST FLOOR FRAMING PLAN NOTES:

1. TOP OF STEEL ELEVATION = -0'-5 1/2" UNLESS NOTED

D1 — INDICATES SPAN OF 5 1/2" NORMAL WEIGHT CONCRETE SLAB ON 2" V-LOK DECK, 22 GA. w/6x6-W1.4xW1.4 WWM w/RADIANT HEAT TUBING

(#) — INDICATES NUMBER OF 3/4"Ø x 3 1/2" WELDED SHEAR STUDS EQUALLY SPACED ALONG BEAM

** — INDICATES BEAMS TO BE GALVANIZED

##k — DENOTES ASD BEAM END REACTIONS

1 — PROVIDE BEARING PL: 5" x 1 1/4" x 1'-1" - SEE DETAIL C3/S001

2 — PROVIDE BEARING PL: 5" x 1" x 0'-7" - SEE DETAIL C3/S001

3 — PROVIDE BEARING PL: 5" x 3/4" x 0'-10" - SEE DETAIL C3/S001

4 — EMBED PLATE CONNECTION w/SHEAR TAB - SEE DETAIL C1/SF500

5 — CONT. ANGLE - SEE DETAIL D9/SF500

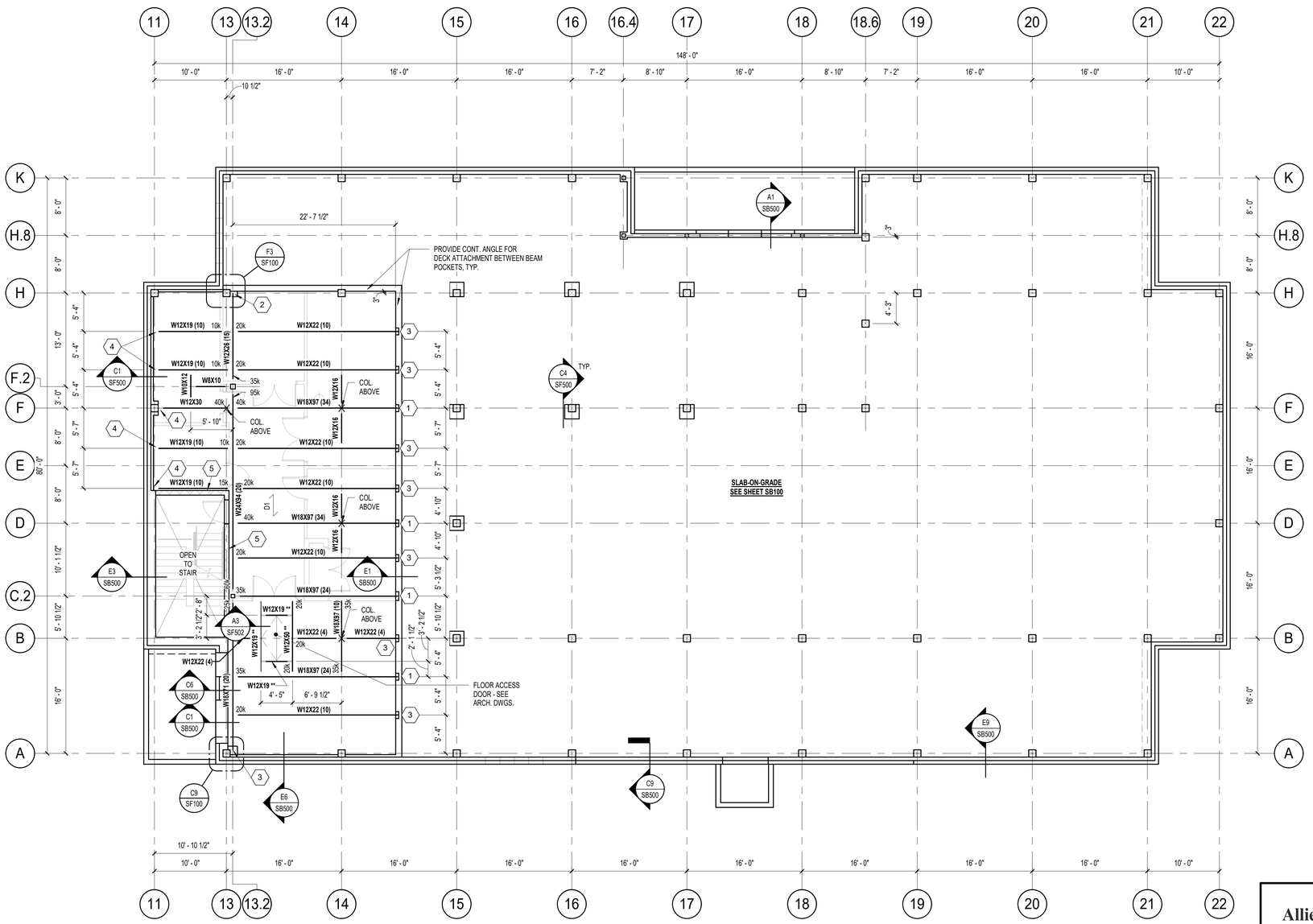

A1 — STRUCTURAL ~ FIRST FLOOR FRAMING PLAN

1/8" = 1'-0"

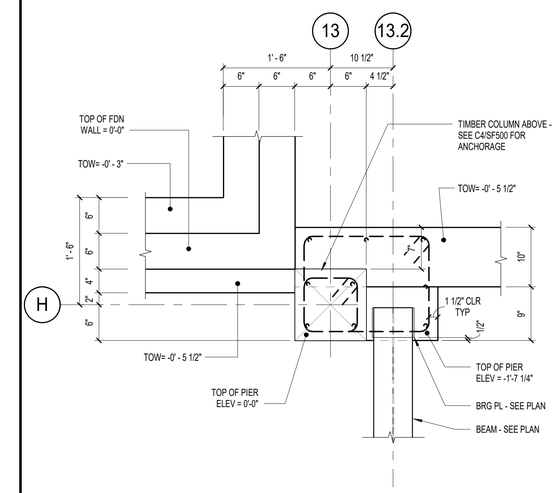

F3 — TOP OF WALL DETAIL - H/13

1" = 1'-0"

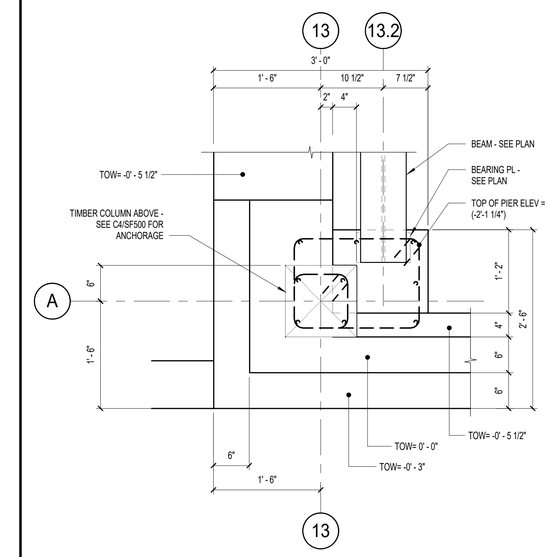

C9 — TOP OF WALL DETAIL - A/13

1" = 1'-0"

PROJECT KEY PLAN

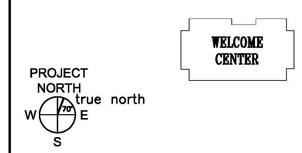

Allied Engineering
Structural Mechanical Electrical Plumbing
160 Veranda Street
Portland, Maine 04103
P: 207.221.2260
F: 207.221.2266
Web: www.allied-eng.com

AECOM
1 FEDERAL STREET, 8TH FLOOR
BOSTON, MA 02110
617.723.1700
www.aecom.com

Allied Project No: 12069 | Cad File: 12069S.rvt

STATE OF MAINE
DEPARTMENT OF TRANSPORTATION

DATE

FED PIN NO: NA
PIN NO: 017163.02 & 017163.03

STATE OF MAINE — WILLIAM P. FAUCHER No. 7133 — PROFESSIONAL ENGINEER

SIGNATURE

P.E. NUMBER 7133

DATE JANUARY 17, 2022

PROJECT INFORMATION

PROGRAM MANAGER	AECOM
DESIGNER	ALLIED ENGINEERING
CONSULTANT	
PROJECT RESIDENT	
CONTRACTOR	
PROJECT COMPLETION DATE	

MAINE DEPARTMENT OF TRANSPORTATION
ACADIA GATEWAY FACILITY
INTERMODAL AND WELCOME CENTER

STRUCTURAL – FIRST FLOOR FRAMING PLAN

SHEET NUMBER
SF100

Filename: Division: Date: Username:

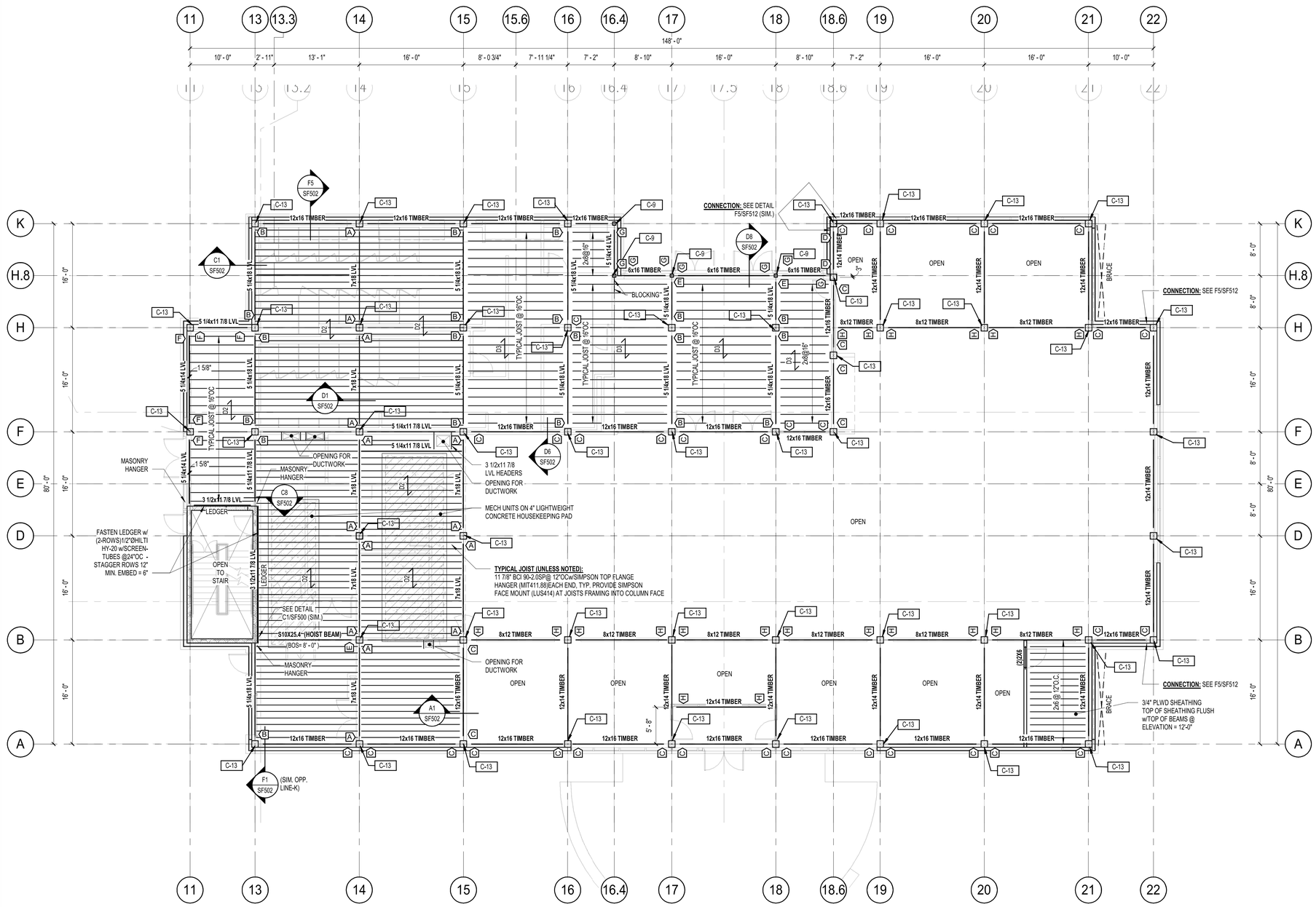

COLUMN SCHEDULE

MARK	SIZE
C-1	HSS6X6X5/8
C-2	HSS8X8X1/2
C-7	5 1/4 x 7 PSL
C-9	6 x 6 TIMBER
C-10	6 x 12 TIMBER
C-11	8x8 TIMBER
C-13	12x12 TIMBER

SECOND FLOOR FRAMING PLAN NOTES:

1. CAP STAIR SHAFT BETWEEN LINES 11 AND 13 w/ 4" CONCRETE SLAB ON 1 1/2" STEEL DECKING - SEE E1/SF200 FOR TOP OF SLAB ELEVATIONS.
2. PROVIDE 16"DEEP (MIN) BOND BEAM AT EACH FLOOR LEVEL AND AT TOP OF CMU WALLS - REINFORCE w/(2)#4 BARS CONTINUOUS, GROUT SOLID.
3. SIPS PANEL MANUFACTURER SHALL INCORPORATE JAMB, SILL AND HEADER SUPPORT FRAMING ABOVE WINDOWS, DOORS, OVERHEAD DOOR OPENINGS AND CURTAIN WALL OPENINGS. COORDINATE LOADING AND ATTACHMENT REQUIREMENTS w/G.C. AND COMPONENT MANUFACTURERS.

C-# INDICATES COLUMN TYPE

D2 INDICATES SPAN OF 2" LIGHTWEIGHT CONCRETE TOPPING ON 3/4" PLWD SHEATHING. TOTAL FLOOR THICKNESS = 2 3/4"

D3 INDICATES SPAN OF 3/4" PLWD SHEATHING. TOTAL FLOOR THICKNESS = 3/4"

INDICATES CONNECTION TYPE:

A: SEE DETAIL F1/SF501
B: SEE DETAIL F4/SF501
C: SEE DETAIL D1/SF501
D: SEE DETAIL D5/SF501
E: SIMPSON HHUS7.25/10, OR EQUAL
F: SIMPSON HUC25.25/11-SDS, OR EQUAL
G: SIMPSON HUC612-SDS, OR EQUAL
H: SEE DETAIL D4/SF512

PROJECT KEY PLAN

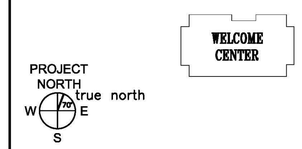

Allied Engineering
Structural Mechanical Electrical Plumbing
160 Veranda Street
Portland, Maine 04103
P: 207.221.2260
F: 207.221.2266
Web:www.allied-eng.com

AECOM
1 FEDERAL STREET, 8TH FLOOR
BOSTON, MA 02110
617.723.1700
www.aecom.com

Allied Project No: 12069 | Cad File: 12069S.rvt

A1 | STRUCTURAL ~ SECOND FLOOR FRAMING PLAN
1/8" = 1'-0"

STATE OF MAINE
DEPARTMENT OF TRANSPORTATION

DATE

FED PIN NO: NA
PIN NO: 017163.02 & 017163.03

STATE OF MAINE
WILLIAM P. FAUCHER
No. 7133
LICENSED
PROFESSIONAL ENGINEER

SIGNATURE

P.E. NUMBER 7133

DATE JANUARY 17, 2022

PROJECT INFORMATION

PROGRAM	–
PROJECT MANAGER	–
DESIGNER	AECOM
CONSULTANT	ALLIED ENGINEERING
PROJECT RESIDENT	–
CONTRACTOR	–
PROJECT COMPLETION DATE	–

MAINE DEPARTMENT OF TRANSPORTATION
ACADIA GATEWAY FACILITY
INTERMODAL AND WELCOME CENTER
STRUCTURAL – SECOND FLOOR FRAMING PLAN

SHEET NUMBER
SF101

Filename: –
Division: –
Date: –
Username: –

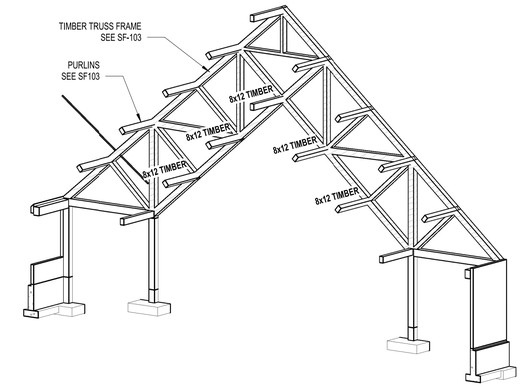

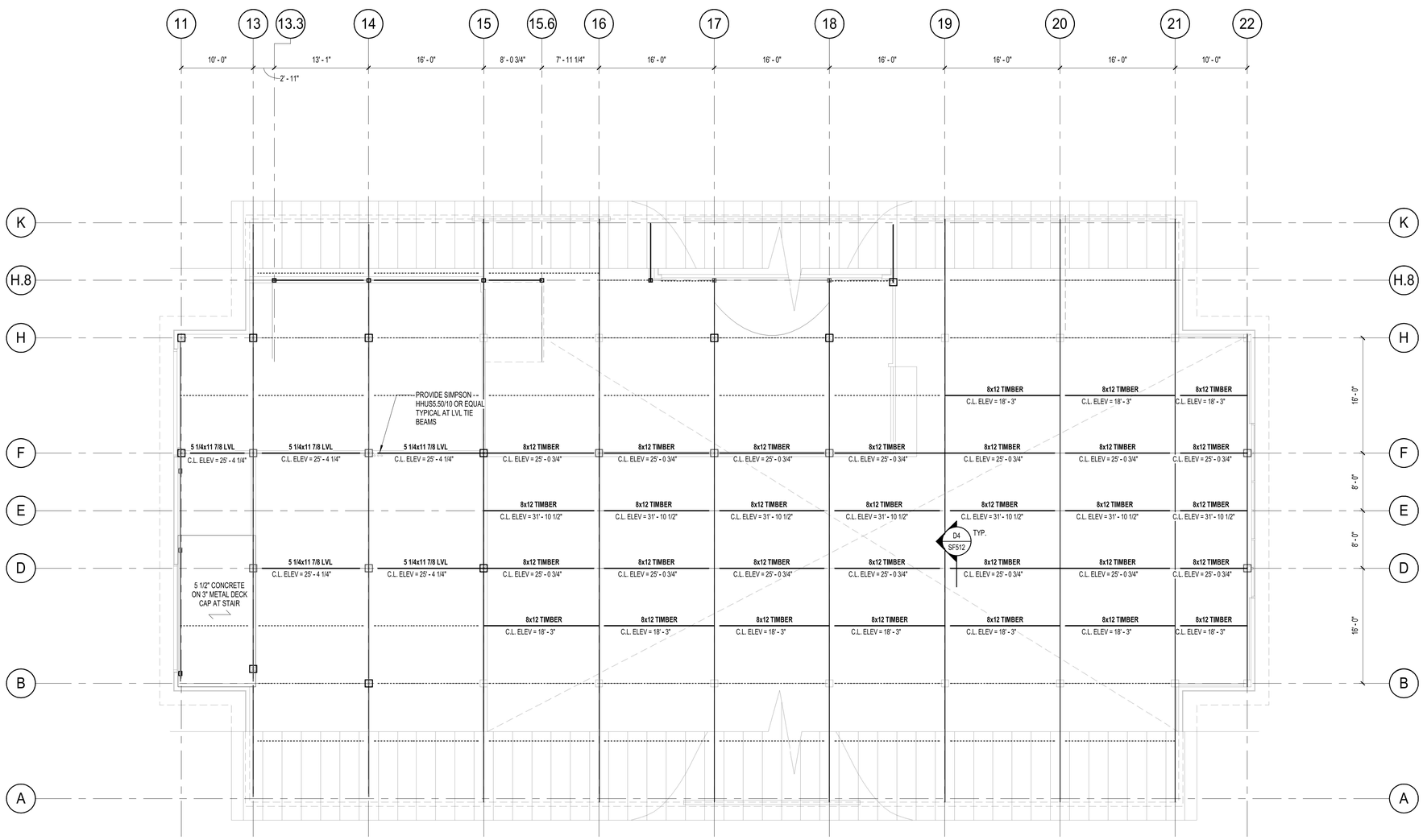

PROJECT KEY PLAN

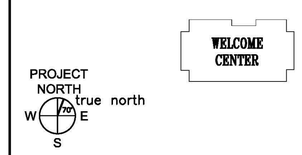

A1	STRUCTURAL ~ BOTTOM CHORD TIE-BEAM PLAN
1/8" = 1'-0"	

Allied Engineering
Structural Mechanical Electrical Plumbing
160 Veranda Street
Portland, Maine 04103
P: 207.221.2260
F: 207.221.2266
Web: www.allied-eng.com

Allied Project No: 12069 | Cad File: 120695.rvt

AECOM
1 FEDERAL STREET, 8TH FLOOR
BOSTON, MA 02110
617.723.1700
www.aecom.com

STATE OF MAINE
DEPARTMENT OF TRANSPORTATION

	DATE

FED PIN NO: NA
PIN NO: 017163.02 & 017163.03

STATE OF MAINE
WILLIAM P. FAUCHER
No. 7133
PROFESSIONAL ENGINEER

SIGNATURE
P.E. NUMBER 7133
DATE JANUARY 17, 2022

PROJECT INFORMATION

PROGRAM	–
PROJECT MANAGER	–
DESIGNER	AECOM
CONSULTANT	ALLIED ENGINEERING
PROJECT RESIDENT	–
CONTRACTOR	–
PROJECT COMPLETION DATE	–

MAINE DEPARTMENT OF TRANSPORTATION
ACADIA GATEWAY FACILITY
INTERMODAL AND WELCOME CENTER
STRUCTURAL – MISC. FRAMING PLANS

SHEET NUMBER
SF102

Filename: –
Division: –
Date: –
Username: –

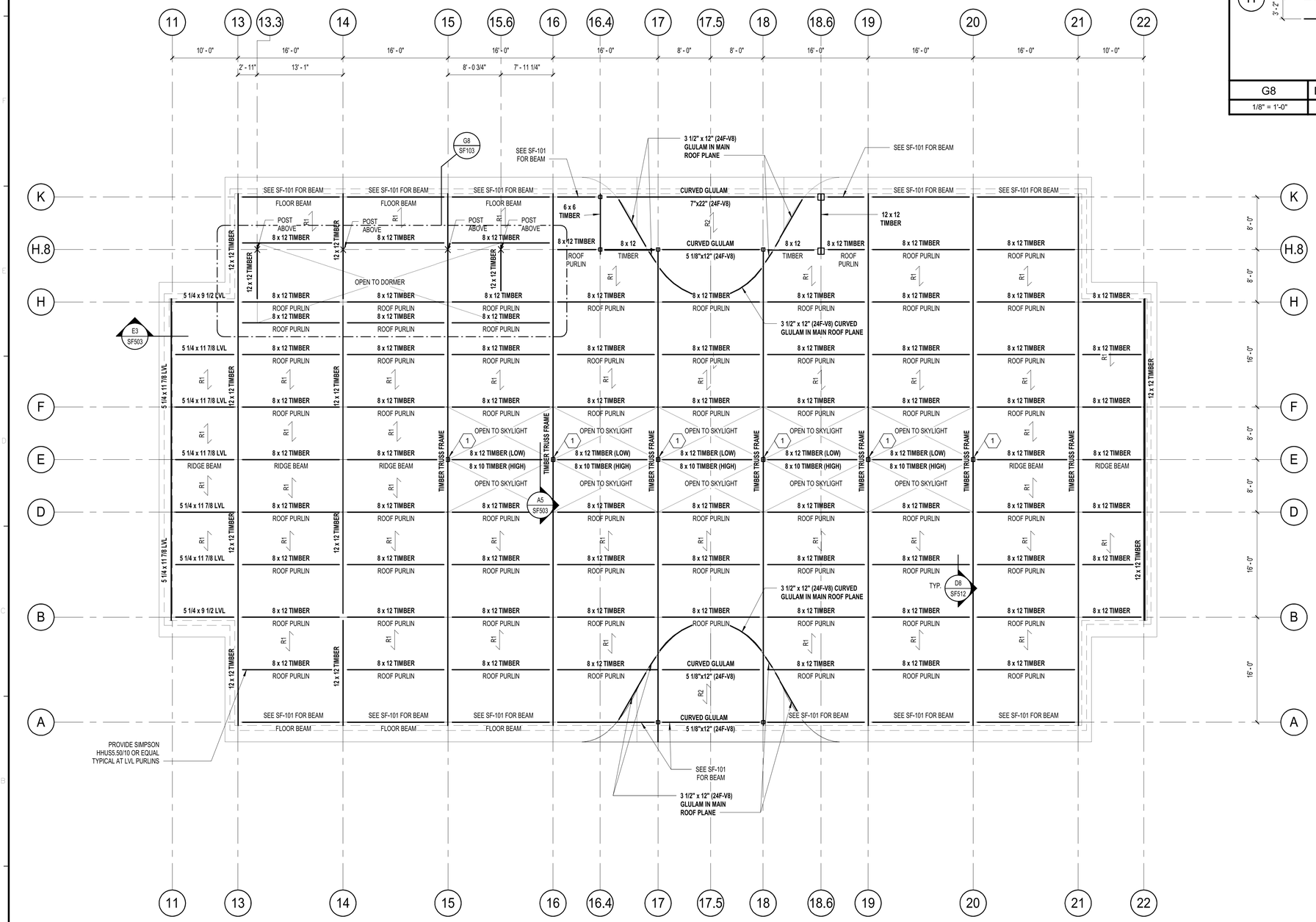

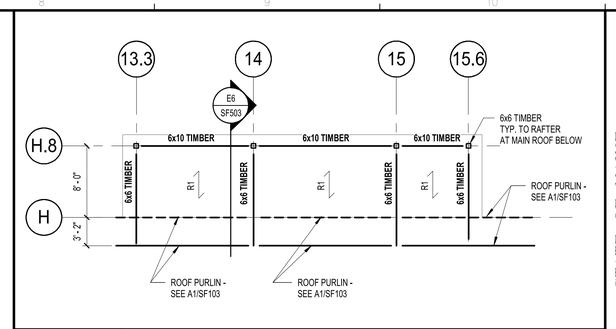

G8	DORMER ROOF FRAMING PLAN
1/8" = 1'-0"	

ROOF FRAMING PLAN NOTES:

- R1 — INDICATES SPAN OF 10" SIPS ROOF PANELS
- R2 — INDICATES SPAN OF 10" SIPS ROOF PANELS (CURVED OR NARROW)
- (1) — INDICATES 6x8 TIMBER POST ABOVE TOP CHORD FOR SKYLIGHT SUPPORT FRAMING
- 1. GLULAM FRAMING CONNECTIONS PROVIDED BY GLULAM MANUFACTURER

PROJECT KEY PLAN

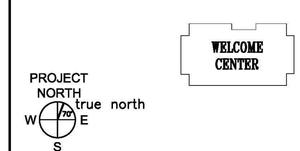

A1	STRUCTURAL ~ ROOF FRAMING PLAN
1/8" = 1'-0"	

Allied Engineering
Structural Mechanical Electrical Plumbing
160 Veranda Street
Portland, Maine 04103
P: 207.221.2260
F: 207.221.2266
Web:www.allied-eng.com

Allied Project No: 12069 | Cad File: 12069S.rvt

AECOM
1 FEDERAL STREET, 8TH FLOOR
BOSTON, MA 02110
617.723.1700
www.aecom.com

STATE OF MAINE
DEPARTMENT OF TRANSPORTATION

DATE

FED PIN NO: NA
PIN NO: 017163.02 & 017163.03

STATE OF MAINE — WILLIAM P. FAUCHER — No. 7133 — PROFESSIONAL ENGINEER

SIGNATURE

P.E. NUMBER 7133

DATE JANUARY 17, 2022

PROJECT INFORMATION

PROGRAM	–
PROJECT MANAGER	–
DESIGNER	AECOM
CONSULTANT	ALLIED ENGINEERING
PROJECT RESIDENT	–
CONTRACTOR	–
PROJECT COMPLETION DATE	–

MAINE DEPARTMENT OF TRANSPORTATION
ACADIA GATEWAY FACILITY
INTERMODAL AND WELCOME CENTER

STRUCTURAL – ROOF FRAMING PLAN

SHEET NUMBER
SF103

Filename: –
Date: –
Division: –
Username: –

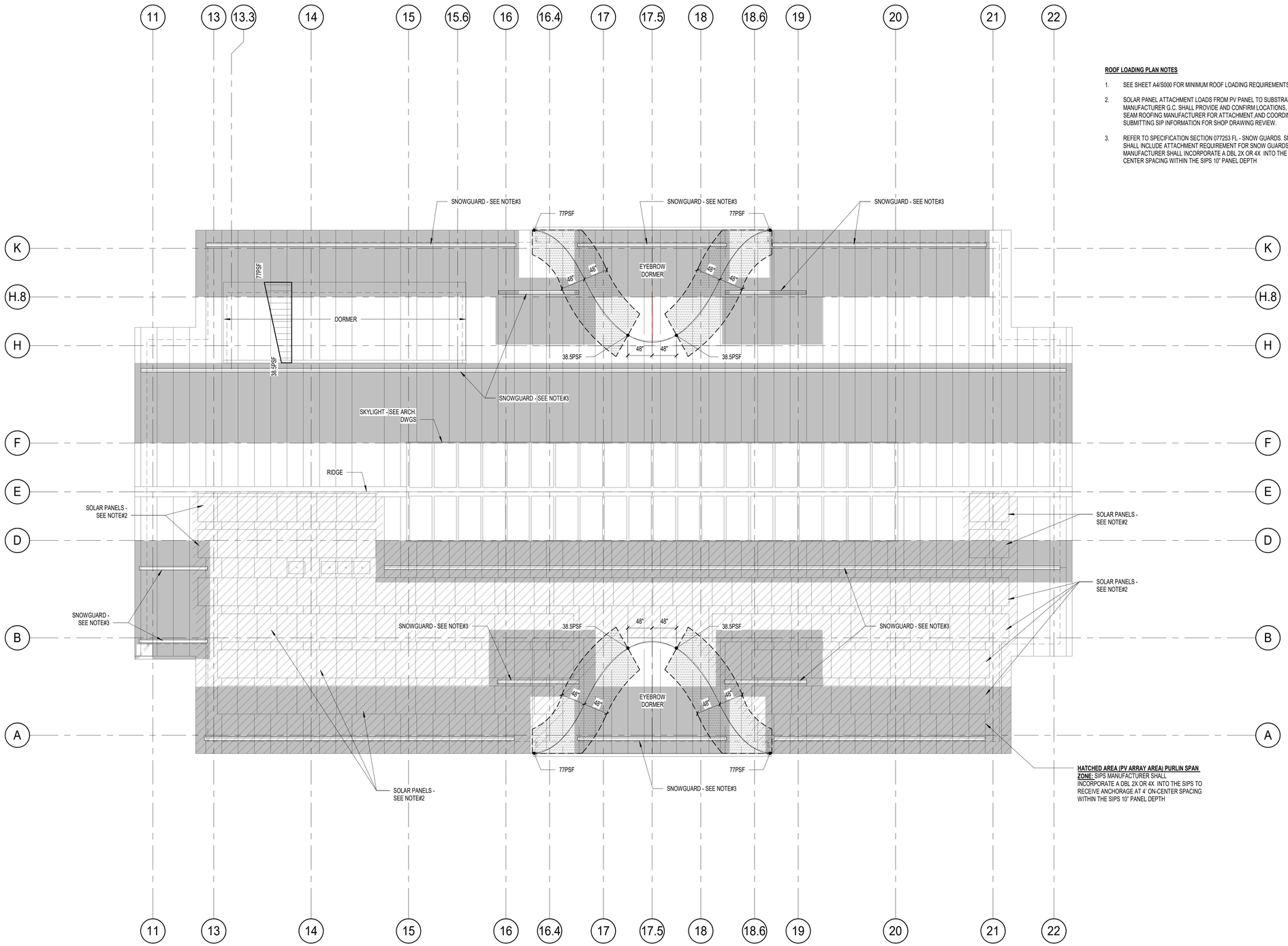

ROOF LOADING PLAN NOTES

1. SEE SHEET A4/S000 FOR MINIMUM ROOF LOADING REQUIREMENTS.
2. SOLAR PANEL ATTACHMENT LOADS FROM PV PANEL TO SUBSTRATE MATERIAL SHALL BE SUPPLIED BY PV MANUFACTURER G.C. SHALL PROVIDE AND CONFIRM LOCATIONS, LOADS, COORDINATE WITH STANDING SEAM ROOFING MANUFACTURER FOR ATTACHMENT AND COORDINATE WITH SIP MANUFACTURER WHEN SUBMITTING SIP INFORMATION FOR SHOP DRAWING REVIEW.
3. REFER TO SPECIFICATION SECTION 077253 FL - SNOW GUARDS. SNOW GUARD SUBMITTAL CALCULATIONS SHALL INCLUDE ATTACHMENT REQUIREMENT FOR SNOW GUARDS TO SIPS ROOF PANELS. SIPS MANUFACTURER SHALL INCORPORATE A DBL 2X OR 4X INTO THE SIPS TO RECEIVE ANCHORAGE AT 4' ON-CENTER SPACING WITHIN THE SIPS 10" PANEL DEPTH

A1	STRUCTURAL ~ ROOF SIPS FASTENING AND LOADING PLAN
1/8" = 1'-0"	

Allied Engineering
Structural Mechanical Electrical Plumbing
160 Veranda Street
Portland, Maine 04103
P: 207.221.2260
F: 207.221.2266
Web: www.allied-eng.com
Allied Project No: 12069 | Cad File: 12069S.rvt

AECOM
1 FEDERAL STREET, 8TH FLOOR
BOSTON, MA 02110
617.723.1700
www.aecom.com

STATE OF MAINE
DEPARTMENT OF TRANSPORTATION

DATE

FED PIN NO: NA
PIN NO: 017163.02 & 017163.03

STATE OF MAINE
WILLIAM P. FAUCHER
No. 7133
PROFESSIONAL ENGINEER

SIGNATURE

P.E. NUMBER 7133

DATE JANUARY 17, 2022

PROJECT INFORMATION

PROGRAM	
PROJECT MANAGER	
DESIGNER	AECOM
CONSULTANT	ALLIED ENGINEERING
PROJECT RESIDENT	
CONTRACTOR	
PROJECT COMPLETION DATE	

MAINE DEPARTMENT OF TRANSPORTATION
ACADIA GATEWAY FACILITY
INTERMODAL AND WELCOME CENTER

STRUCTURAL – ROOF LOADING PLAN

COPYRIGHT 2019 - 2021 BY AECOM TECHNICAL SERVICES, INC.

SHEET NUMBER
SF104

Filename: Date: Division: Username:

NOTE:

1. PROVIDE SIMPSON MBHU5.5/14KT
2. PROVIDE SIMPSON BC6
3. PROVIDE SIMPSON HUCQ612-SDS

C-# INDICATES COLUMN TYPE - SEE E9/SB100 FOR COLUMN SCHEDULE

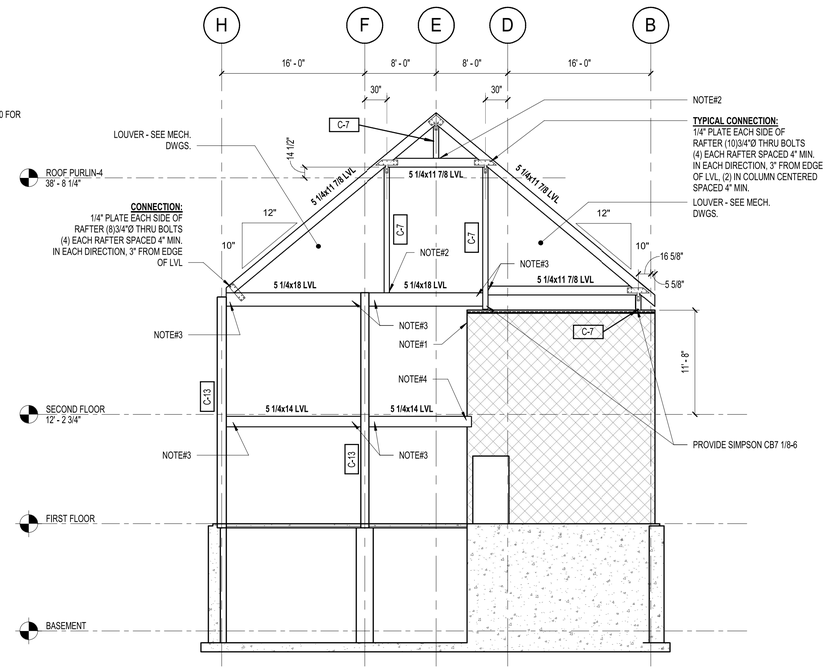

E1	ELEVATION LINE-11
1/8" = 1'-0"	

NOTE:

1. SEE SF-101 FOR CONNECTIONS NOT NOTED IN THIS VIEW

C-# INDICATES COLUMN TYPE - SEE SF-101 FOR COLUMN SCHEDULE

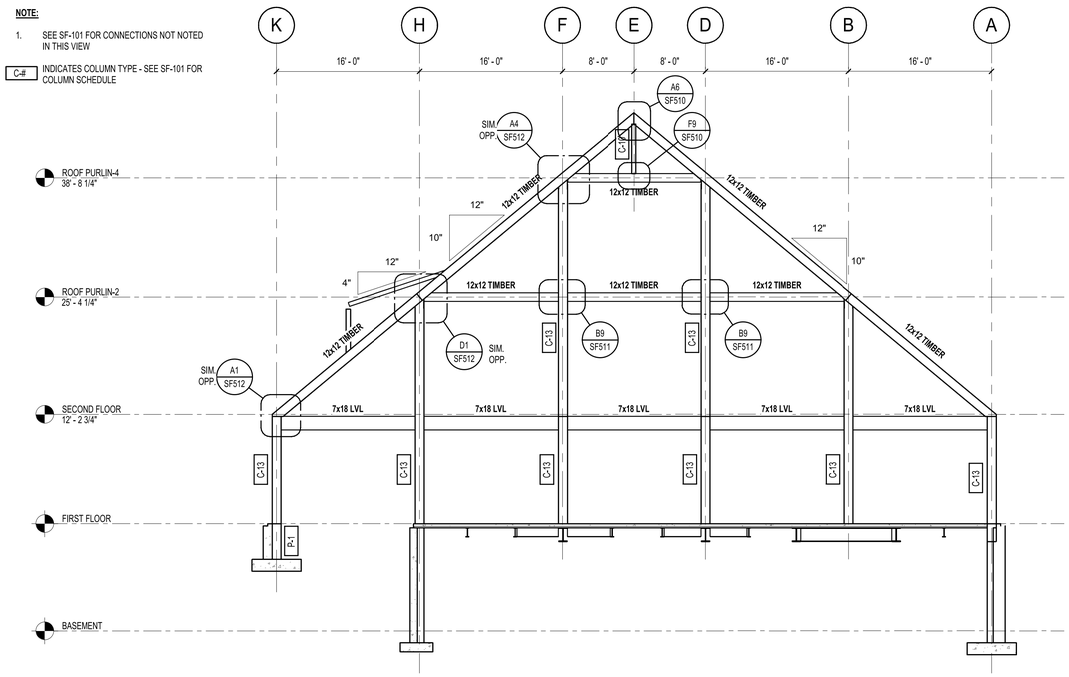

E6	ELEVATION LINE-14
1/8" = 1'-0"	

NOTE:

1. REFER TO DETAIL C8/SF502
2. PROVIDE SIMPSON C1212

C-# INDICATES COLUMN TYPE - SEE SF-101 FOR COLUMN SCHEDULE

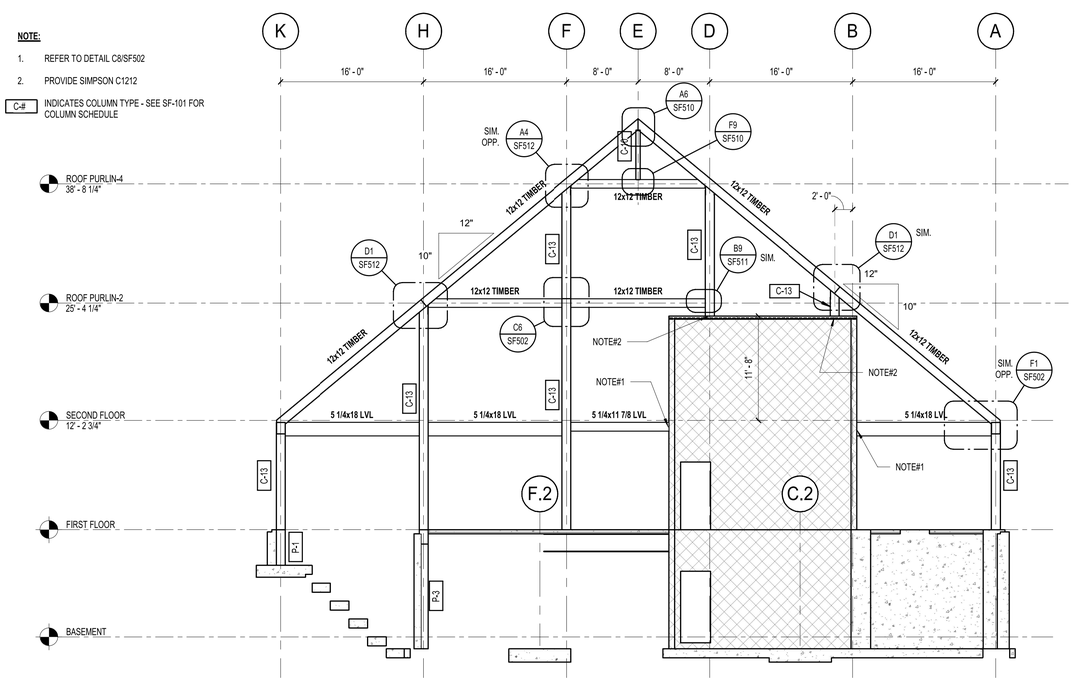

A1	ELEVATION LINE-13
1/8" = 1'-0"	

NOTE:

C-# INDICATES COLUMN TYPE - SEE SF-101 FOR COLUMN SCHEDULE

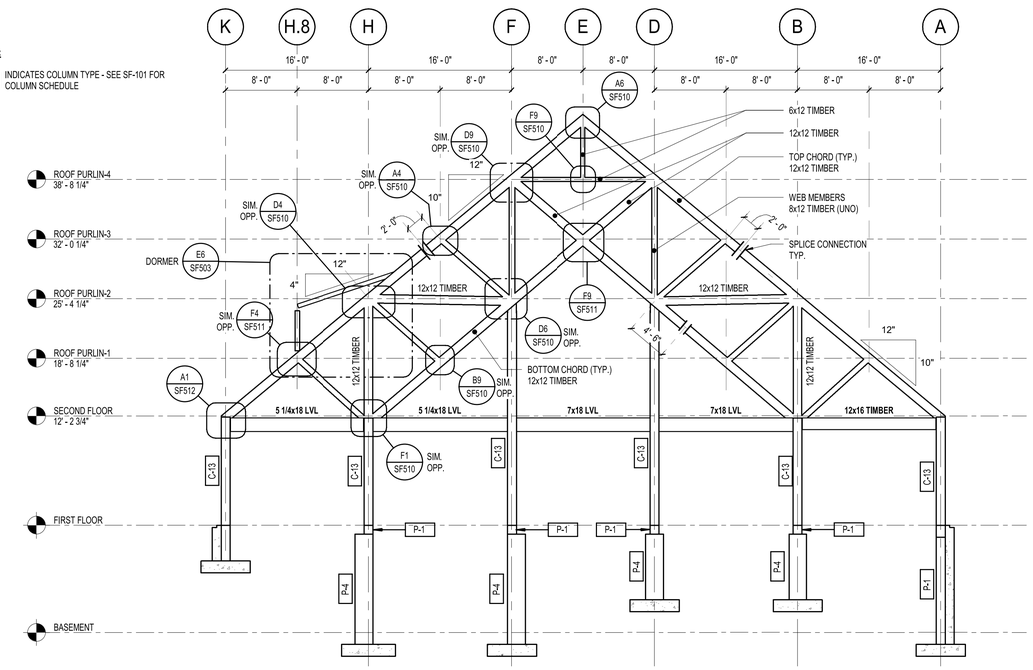

B6	ELEVATION LINE-15
1/8" = 1'-0"	

Allied Engineering
Structural Mechanical Electrical Plumbing
160 Veranda Street
Portland, Maine 04103
P: 207.221.2260
F: 207.221.2266
Web: www.allied-eng.com

Allied Project No: 12069 | Cad File: 12069S.rvt

AECOM
1 FEDERAL STREET, 8TH FLOOR
BOSTON, MA 02110
617.723.1700
www.aecom.com

STATE OF MAINE
DEPARTMENT OF TRANSPORTATION

DATE

FED PIN NO: NA
PIN NO: 017163.02 & 017163.03

STATE OF MAINE
WILLIAM P. FAUCHER
No. 7133
PROFESSIONAL ENGINEER

SIGNATURE

P.E. NUMBER
7133

DATE
JANUARY 17, 2022

PROJECT INFORMATION

PROGRAM	–
PROJECT MANAGER	–
DESIGNER	AECOM
CONSULTANT	ALLIED ENGINEERING
PROJECT RESIDENT	–
CONTRACTOR	–
PROJECT COMPLETION DATE	–

MAINE DEPARTMENT OF TRANSPORTATION
ACADIA GATEWAY FACILITY
INTERMODAL AND WELCOME CENTER

STRUCTURAL – FRAMING
ELEVATIONS

SHEET NUMBER
SF200

Filename: –
Date: –
Division: –
Username: –

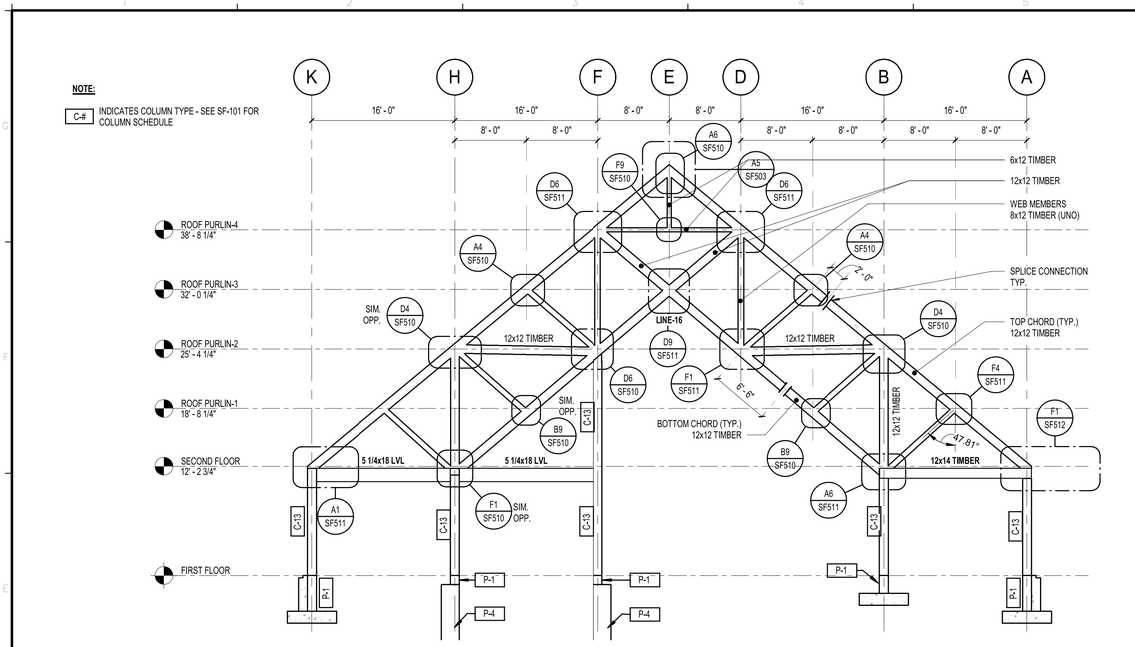

E1 | ELEVATION LINE-16

1/8" = 1'-0"

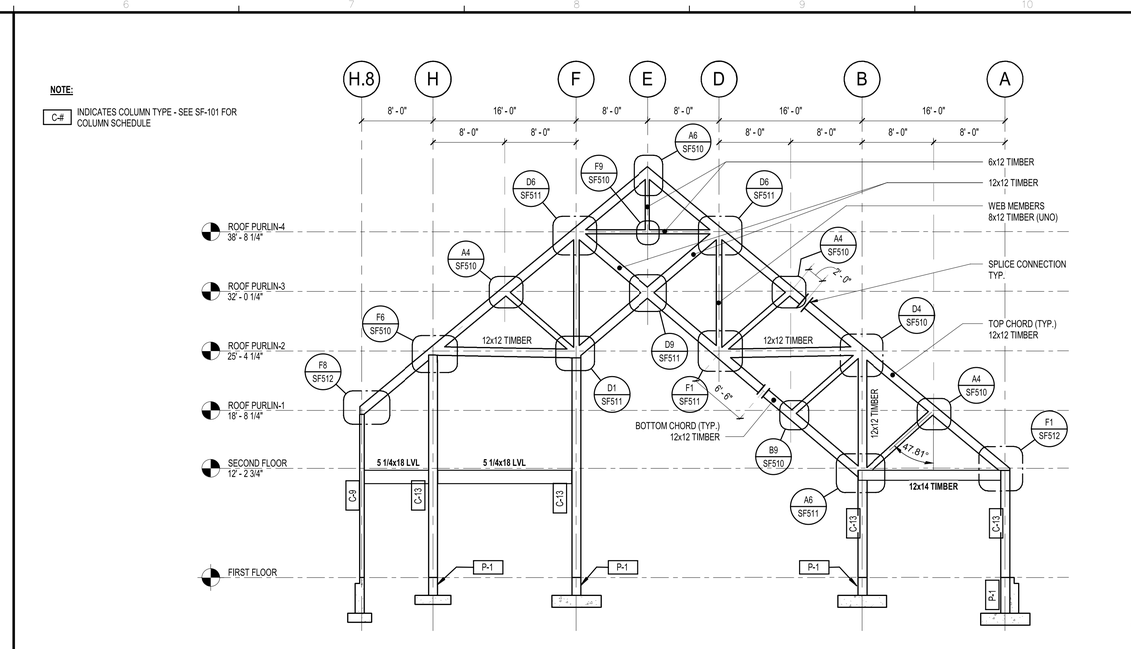

E6 | ELEVATION LINE-18

1/8" = 1'-0"

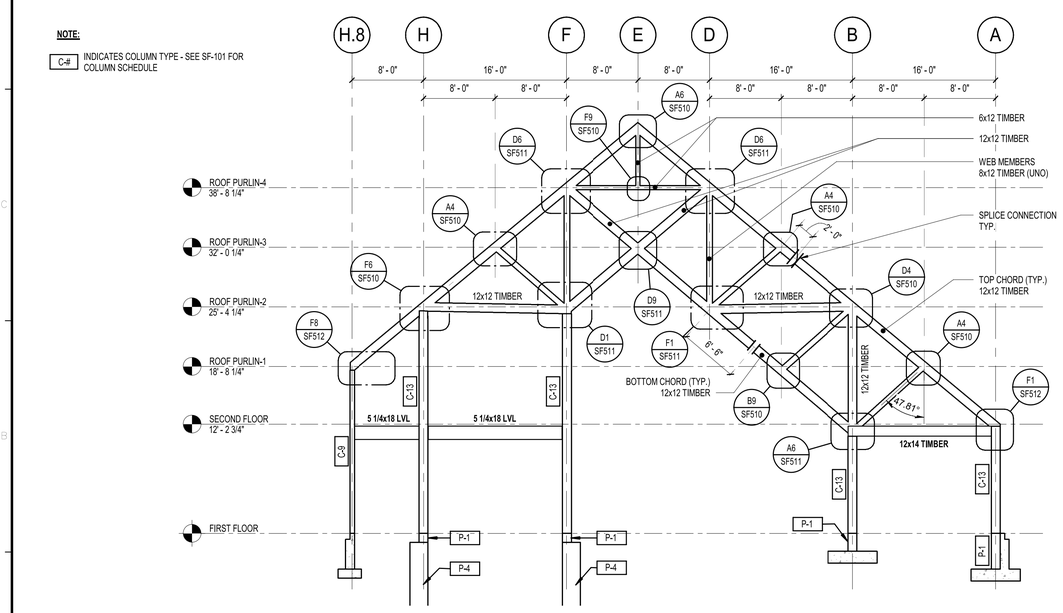

A1 | ELEVATION LINE-17

1/8" = 1'-0"

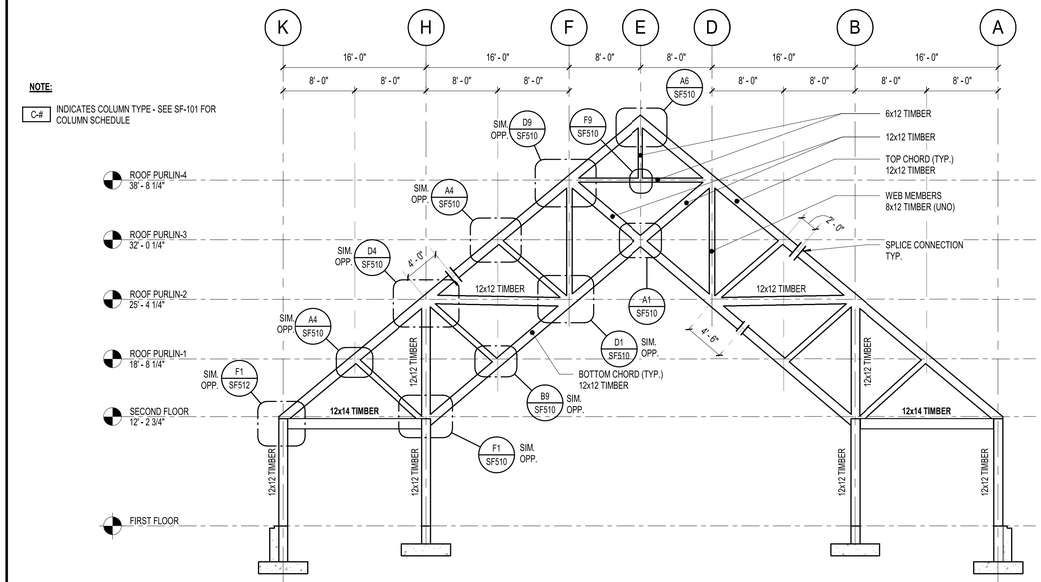

B6 | ELEVATION LINE-19

1/8" = 1'-0"

Allied Engineering
Structural Mechanical Electrical Plumbing
160 Veranda Street
Portland, Maine 04103
P: 207.221.2260
F: 207.221.2266
Web: www.allied-eng.com

AECOM
1 FEDERAL STREET, 8TH FLOOR
BOSTON, MA 02110
617.723.1700
www.aecom.com

Allied Project No: 12069 | Cad File: 120695.rvt

STATE OF MAINE
DEPARTMENT OF TRANSPORTATION

DATE

FED PIN NO: NA
PIN NO: 017163.02 & 017163.03

STATE OF MAINE
WILLIAM P. FAUCHER
No. 7133
PROFESSIONAL ENGINEER

SIGNATURE

P.E. NUMBER 7133

DATE JANUARY 17, 2022

PROJECT INFORMATION

PROGRAM	–
PROJECT MANAGER	–
DESIGNER	AECOM
CONSULTANT	ALLIED ENGINEERING
PROJECT RESIDENT	–
CONTRACTOR	–
PROJECT COMPLETION DATE	–

MAINE DEPARTMENT OF TRANSPORTATION
ACADIA GATEWAY FACILITY
INTERMODAL AND WELCOME CENTER

STRUCTURAL – FRAMING
ELEVATIONS

SHEET NUMBER
SF201

Filename: –
Division: –
Date: –
Username: –

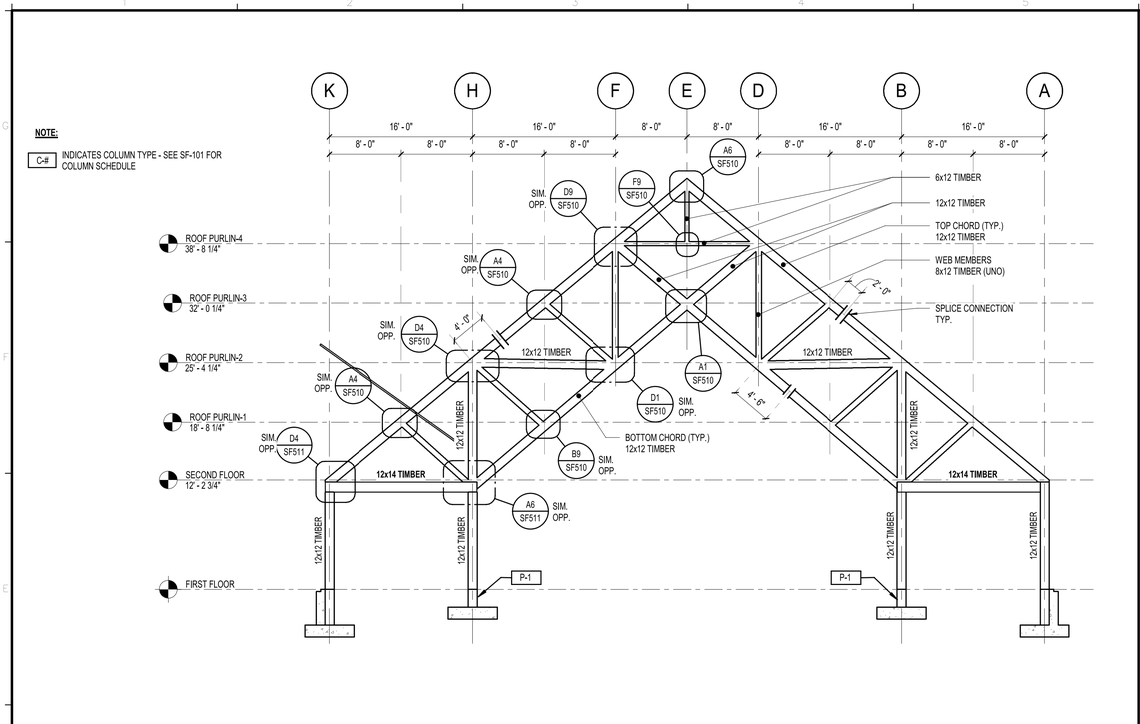

E1	ELEVATION LINE-20
1/8" = 1'-0"	

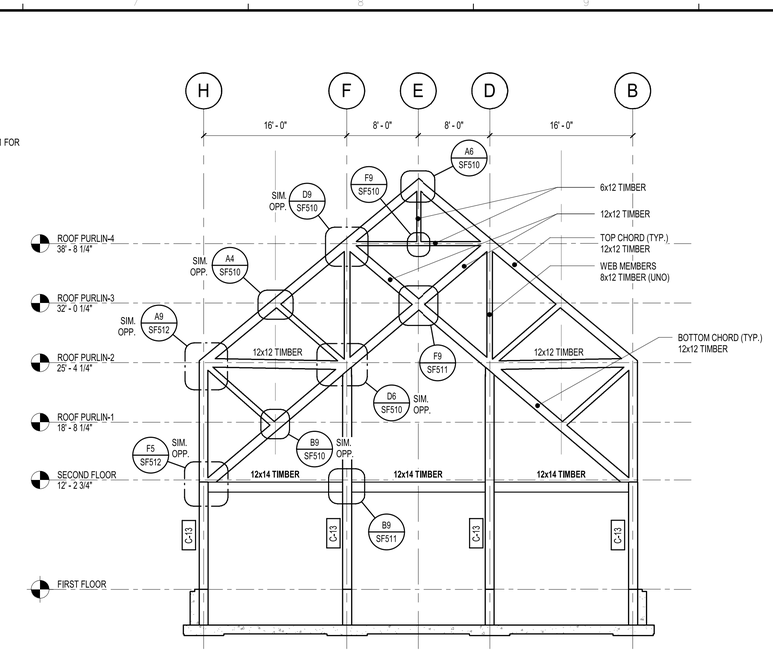

E6	ELEVATION LINE-22
1/8" = 1'-0"	

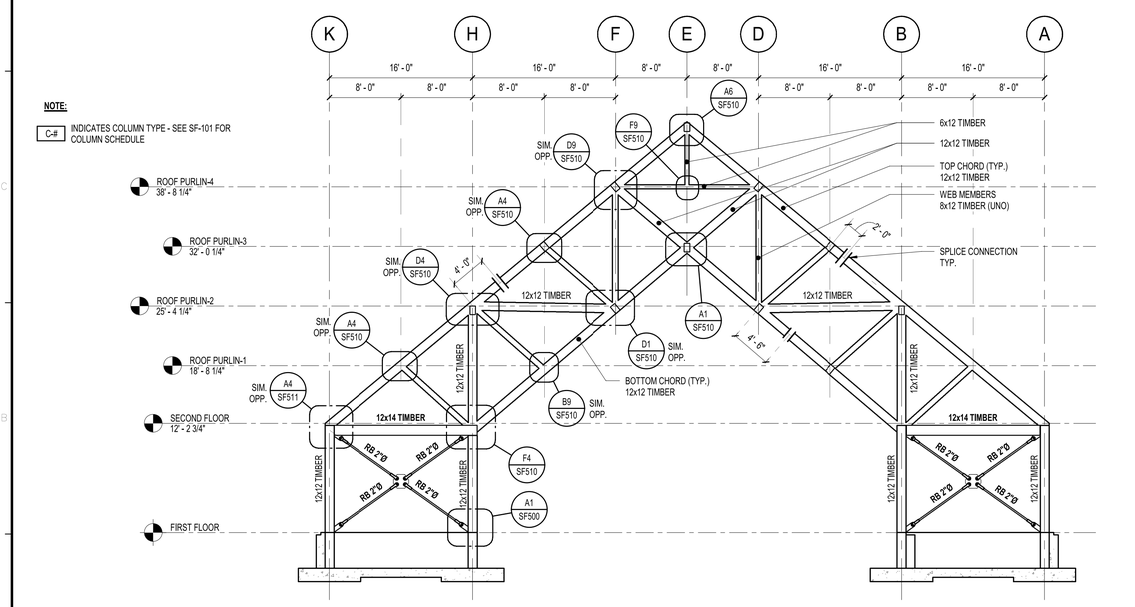

A1	ELEVATION LINE-21
1/8" = 1'-0"	

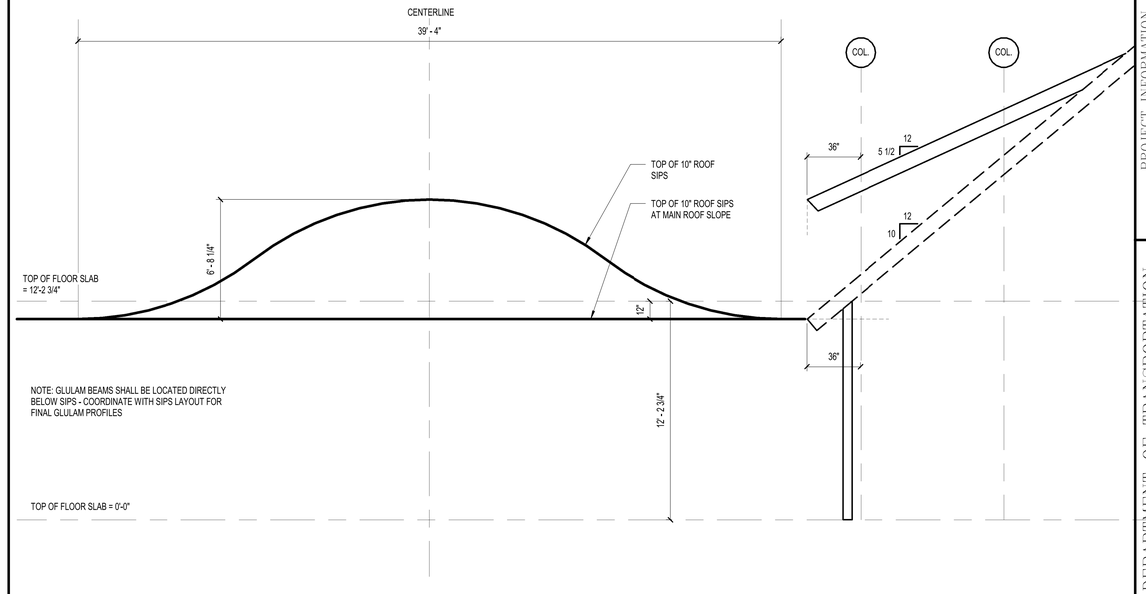

B6	EYEBROW DORMER LAYOUT SCHEMATIC

Allied Engineering
Structural Mechanical Electrical Plumbing
160 Veranda Street
Portland, Maine 04103
P: 207.221.2260
F: 207.221.2266
Web: www.allied-eng.com
Allied Project No: 12069 | Cad File: 120695.rvt

AECOM
1 FEDERAL STREET, 8TH FLOOR
BOSTON, MA 02110
617.723.1700
www.aecom.com

STATE OF MAINE
DEPARTMENT OF TRANSPORTATION

DATE

FED PIN NO: NA
PIN NO: 017163.02 & 017163.03

STATE OF MAINE
WILLIAM P. FAUCHER
No. 7133
PROFESSIONAL ENGINEER

SIGNATURE

P.E. NUMBER 7133

DATE JANUARY 17, 2022

PROJECT INFORMATION

PROGRAM	–
PROJECT MANAGER	–
DESIGNER	AECOM
CONSULTANT	ALLIED ENGINEERING
PROJECT RESIDENT	–
CONTRACTOR	–
PROJECT COMPLETION DATE	–

MAINE DEPARTMENT OF TRANSPORTATION
ACADIA GATEWAY FACILITY
INTERMODAL AND WELCOME CENTER

STRUCTURAL – FRAMING
ELEVATIONS

SHEET NUMBER
SF202

Filename: – Division: – Date: – Username: –

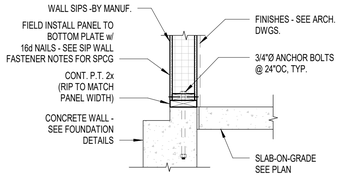

TYPICAL AT WALL PANEL ATTACHMENT TO FOUNDATION WALL
(SECTION VIEW)

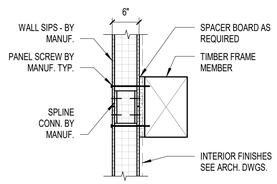

TYPICAL AT WALL GIRT
(SIM. AT PLANVIEW OF TIMBER FRAME COLUMN)

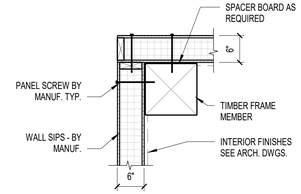

TYPICAL AT TIMBER FRAME COLUMN AT CORNER
(PLAN VIEW)

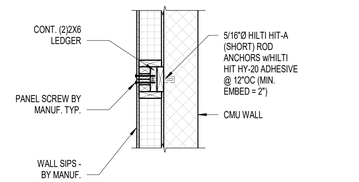

TYPICAL AT CMU WALL
(SECTION VIEW)

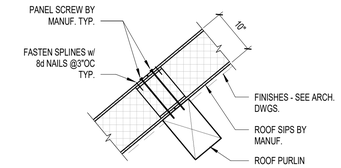

TYPICAL AT ROOF PURLIN
(SECTION VIEW)

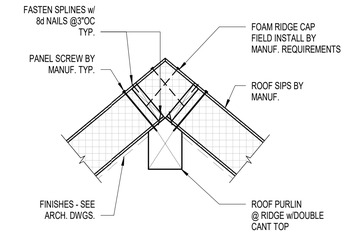

TYPICAL AT RIDGE
(SECTION VIEW)

MIN. SIP FASTENER REQUIREMENTS:

1. PROVIDE #14 PANELS SCREWS @ 3"OC AT DIAPHRAGM BOUNDARIES.
2. SEE SPEC SECTION 061600 FOR SIP FASTENER INFORMATION AND SIP SHOP DRAWING SUBMITTAL REQUIREMENTS.

SIP ROOF FASTENERS:

1. #14 PANEL SCREWS @ 4"OC IN ALL ZONES WITHIN 14'-0" FROM ROOF RIDGE OR ROOF EDGES.
2. #14 PANEL SCREWS @ 12"OC (TYPICAL WITHIN ROOF INTERIOR ZONE)

SIP WALL FASTENERS:

1. #14 PANEL SCREWS @ 12"OC (TYPICAL WITHIN WALL INTERIOR ZONE)
2. #14 PANEL SCREW @ 6"OC IN ALL ZONES WITHIN 8'-0" FROM BUILDING ANY CORNER, UNLESS NOTED

NOTES:

1. BLOCKING WITHIN PANELS SHALL BE DETERMINED BY SIPS PANEL MANUFACTURER
2. REFER TO SHEET SF104 FOR ROOF LOADING REQUIREMENTS INCLUDING NOTES 2 AND 3 FOR COORDINATION w/SNOW GUARDS AND PV ARRAY ASSEMBLIES

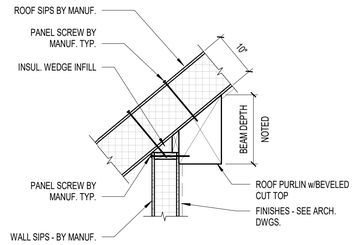

TYPICAL AT ROOF EAVE
(SECTION VIEW)

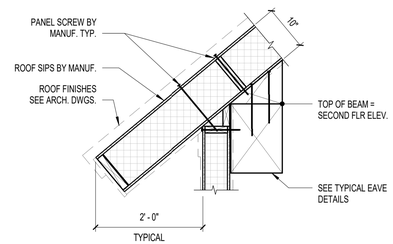

TYPICAL AT ROOF OVERHANG AT EAVE
(SECTION VIEW)

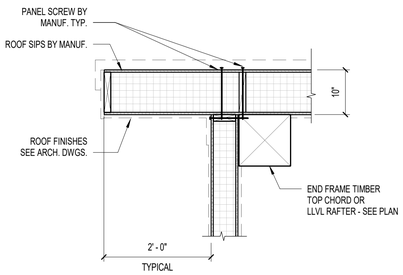

TYPICAL AT ROOF OVERHANG AT RAKE
(SECTION VIEW)

E1 | TYPICAL SIPS CONNECTION DETAILS
3/4" = 1'-0"

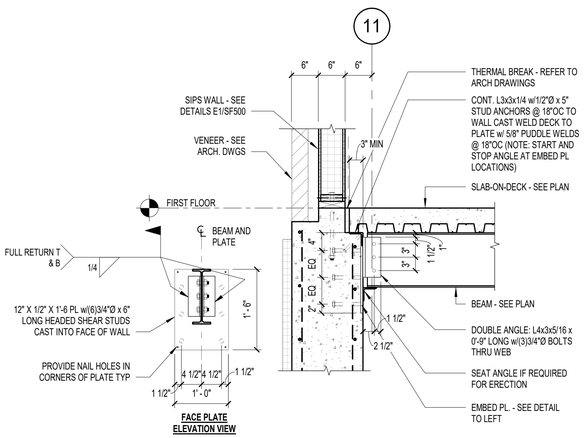

C1 | TYPICAL EMBED PL DETAIL
3/4" = 1'-0"

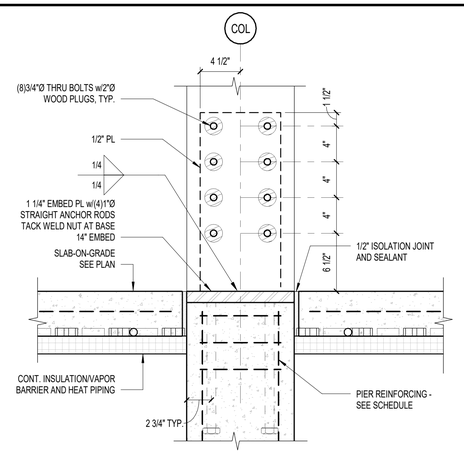

C4 | TIMBER POST BASE DETAIL AT PIER
1 1/2" = 1'-0"

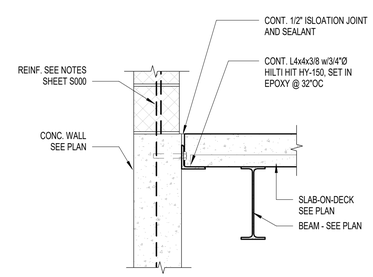

D6 | ANGLE TO WALL
1" = 1'-0"

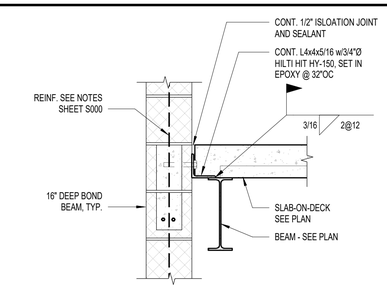

D9 | ANGLE TO CMU AT BEAM
1" = 1'-0"

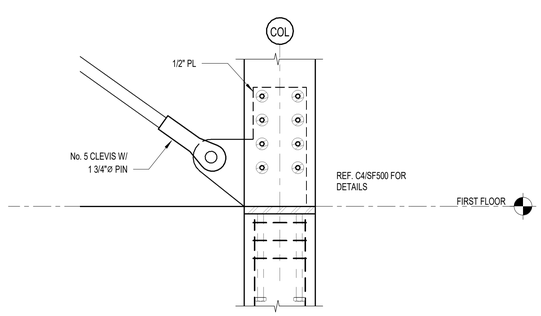

A1 | TIMBER POST BASE DETAIL AT BRACE ROD
1" = 1'-0"

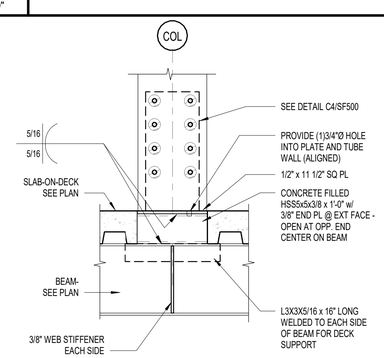

A4 | TIMBER POST BASE DETAIL AT WF BEAM
1" = 1'-0"

Allied Engineering
Structural Mechanical Electrical Plumbing
160 Veranda Street
Portland, Maine 04103
P: 207.221.2260
F: 207.221.2266
Web:www.allied-eng.com

Allied Project No: 12069 | Cad File: 12069S.rvt

AECOM
1 FEDERAL STREET, 8TH FLOOR
BOSTON, MA 02110
617.723.1700
www.aecom.com

STATE OF MAINE
DEPARTMENT OF TRANSPORTATION

DATE

FED PIN NO: NA
PIN NO: 017163.02 & 017163.03

STATE OF MAINE
WILLIAM P. FAUCHER
No. 7133
LICENSED
PROFESSIONAL ENGINEER

SIGNATURE

P.E. NUMBER
7133

DATE
JANUARY 17, 2022

PROJECT INFORMATION

PROGRAM	-
PROJECT MANAGER	-
DESIGNER	AECOM
CONSULTANT	ALLIED ENGINEERING
PROJECT RESIDENT	-
CONTRACTOR	-
PROJECT COMPLETION DATE	-

MAINE DEPARTMENT OF TRANSPORTATION
ACADIA GATEWAY FACILITY
INTERMODAL AND WELCOME CENTER

STRUCTURAL – DETAILS

SHEET NUMBER
SF500

Username:
Division:
Date:
Filename:

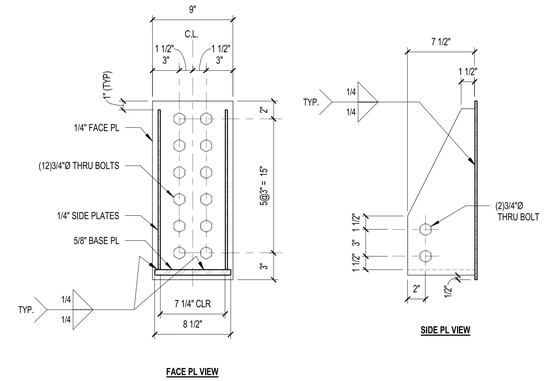

F1	TYPE A CONNECTOR - BEAM TO COL
1 1/2" = 1'-0"	

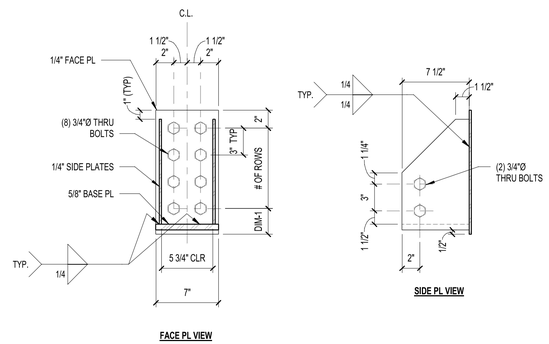

TYPE "B" CONNECTOR		
BEAM SIZE (LVL)	FACE PLATE DIM-1	# OF ROWS OF BOLTS
5 1/4" x 11 7/8"	2 7/8"	4
5 1/4" x 14"	5"	4
5 1/4" x 16"	4"	5
5 1/4" x 18"	3"	6

F4	TYPE B CONNECTOR BEAM TO COL
1 1/2" = 1'-0"	

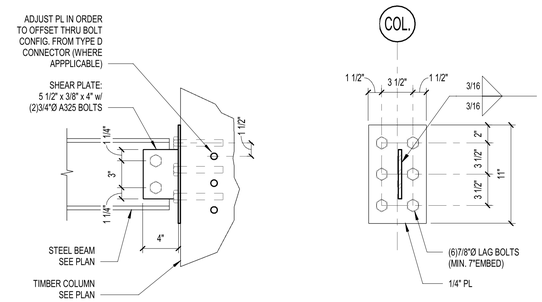

F8	TYPE E CONNECTOR: BEAM TO COL
1 1/2" = 1'-0"	

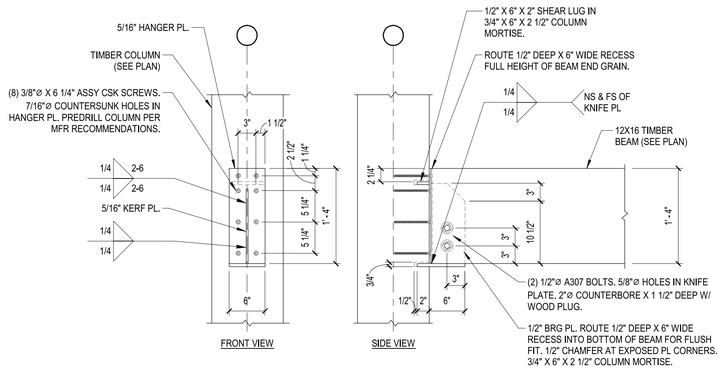

D1	TYPE C CONNECTOR - 12X16 BEAM TO COLUMN CONNECTION
1" = 1'-0"	

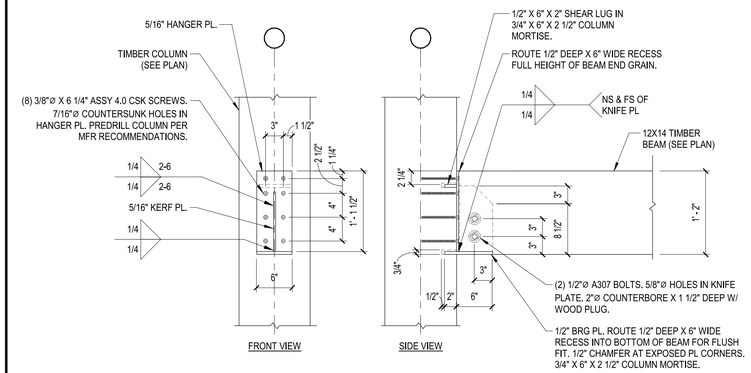

D5	TYPE D CONNECTOR - 12X14 BEAM TO COLUMN CONNECTION
1" = 1'-0"	

STATE OF MAINE
DEPARTMENT OF TRANSPORTATION

DATE

FED PIN NO: NA

PIN NO: 017163.02 & 017163.03

STATE OF MAINE
WILLIAM P. FAUCHER
NO. 7133
PROFESSIONAL ENGINEER

SIGNATURE

P.E. NUMBER
7133

DATE
JANUARY 17, 2022

PROJECT INFORMATION

PROGRAM	–
PROJECT MANAGER	–
DESIGNER	AECOM
CONSULTANT	ALLIED ENGINEERING
PROJECT RESIDENT	–
CONTRACTOR	–
PROJECT COMPLETION DATE	–

MAINE DEPARTMENT OF TRANSPORTATION
ACADIA GATEWAY FACILITY
INTERMODAL AND WELCOME CENTER

STRUCTURAL – DETAILS

SHEET NUMBER
SF501

Allied Engineering
Structural Mechanical Electrical Plumbing
160 Veranda Street
Portland, Maine 04103
P: 207.221.2260
F: 207.221.2266
Web:www.allied-eng.com

AECOM
1 FEDERAL STREET, 8TH FLOOR
BOSTON, MA 02110
617.723.1700
www.aecom.com

Allied Project No: 12069 | Cad File: 12069S.rvt

Username: –
Division: –
Date: –
Filename: –

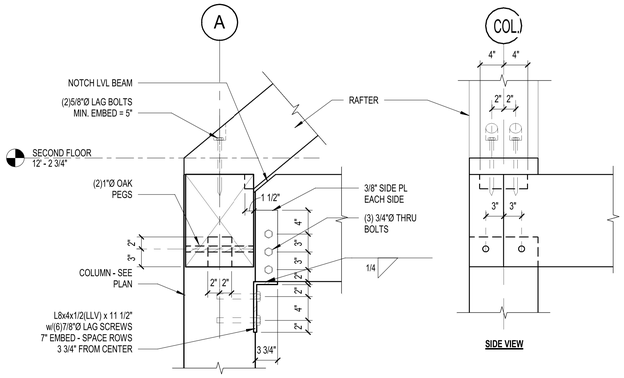

F1 DETAIL

1" = 1'-0"

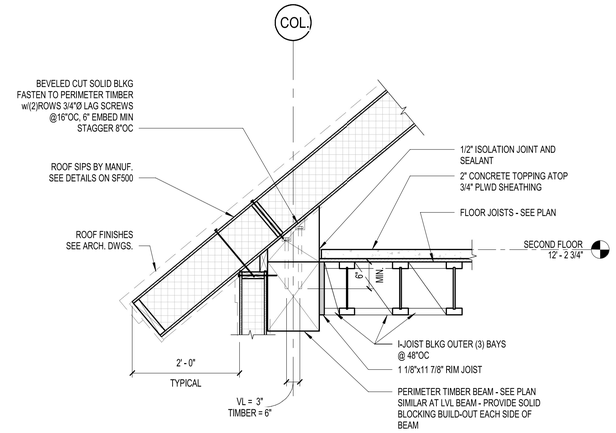

F5 DETAIL

3/4" = 1'-0"

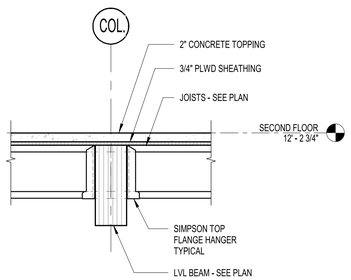

D1 DETAIL

3/4" = 1'-0"

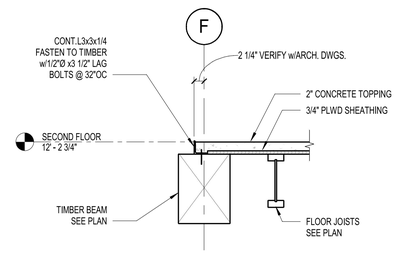

D6 DETAIL

3/4" = 1'-0"

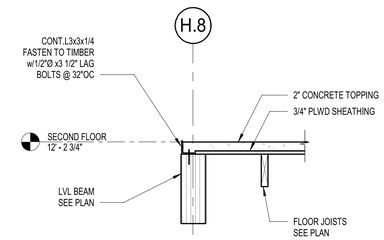

D8 DETAIL

3/4" = 1'-0"

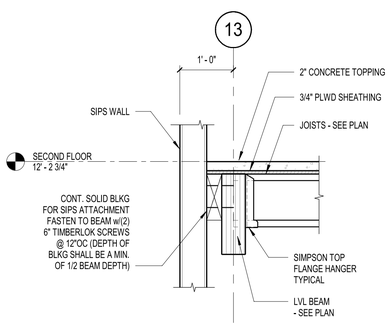

C1 DETAIL

3/4" = 1'-0"

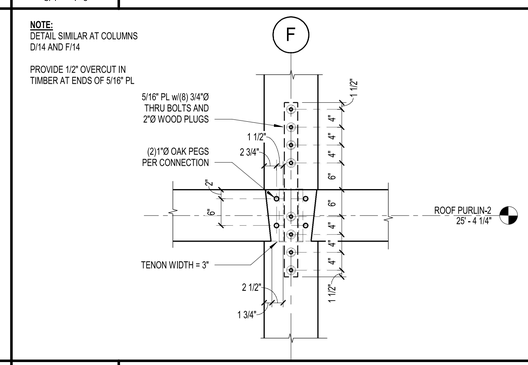

C6 DETAIL

3/4" = 1'-0"

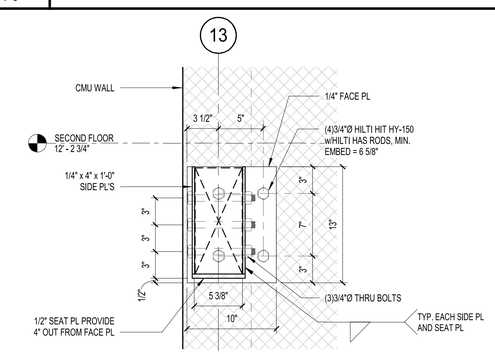

C8 MASONRY HANGER CONNECTION

1 1/2" = 1'-0"

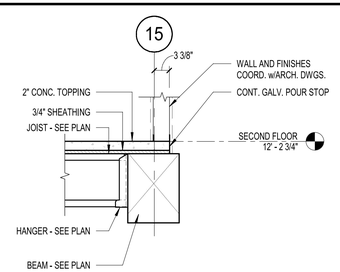

A1 DETAIL

3/4" = 1'-0"

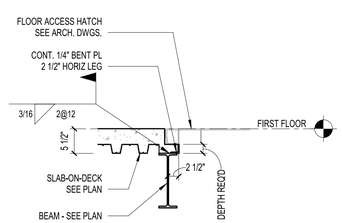

A3 DETAIL AT PERIMETER OF FLOOR HATCH

3/4" = 1'-0"

Allied Engineering
Structural Mechanical Electrical Plumbing
160 Veranda Street
Portland, Maine 04103
P: 207.221.2260
F: 207.221.2266
Web:www.allied-eng.com

Allied Project No: 12069 | Cad File: 120695.rvt

AECOM
1 FEDERAL STREET, 8TH FLOOR
BOSTON, MA 02110
617.723.1700
www.aecom.com

STATE OF MAINE
DEPARTMENT OF TRANSPORTATION

DATE

FED PIN NO: NA

PIN NO: 017163.02 & 017163.03

STATE OF MAINE
WILLIAM P. FAUCHER
No. 7133
LICENSED
PROFESSIONAL ENGINEER

SIGNATURE

P.E. NUMBER 7133

DATE JANUARY 17, 2022

PROJECT INFORMATION

PROGRAM	–
PROJECT MANAGER	–
DESIGNER	AECOM
CONSULTANT	ALLIED ENGINEERING
PROJECT RESIDENT	–
CONTRACTOR	–
PROJECT COMPLETION DATE	–

MAINE DEPARTMENT OF TRANSPORTATION

ACADIA GATEWAY FACILITY

INTERMODAL AND WELCOME CENTER

STRUCTURAL – DETAILS

SHEET NUMBER

SF502

Filename: – Division: – Date: – Username: –

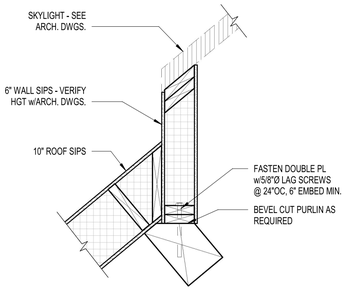

AT CURB

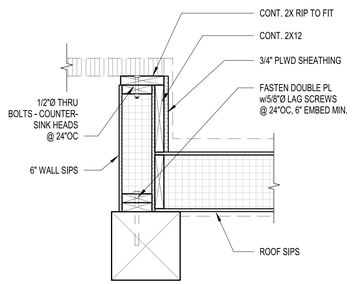

AT GABLE END CURB

E1	SKYLIGHT DETAILS
1" = 1'-0"	

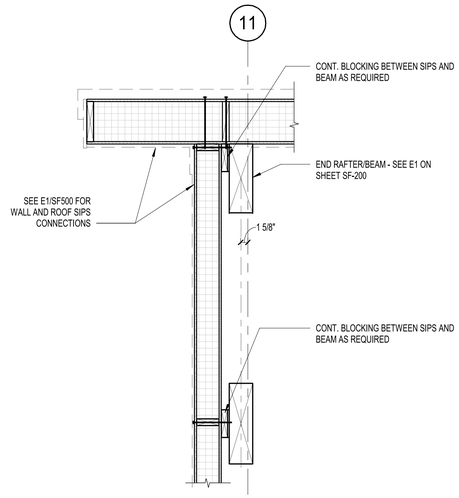

E3	DETAIL
3/4" = 1'-0"	

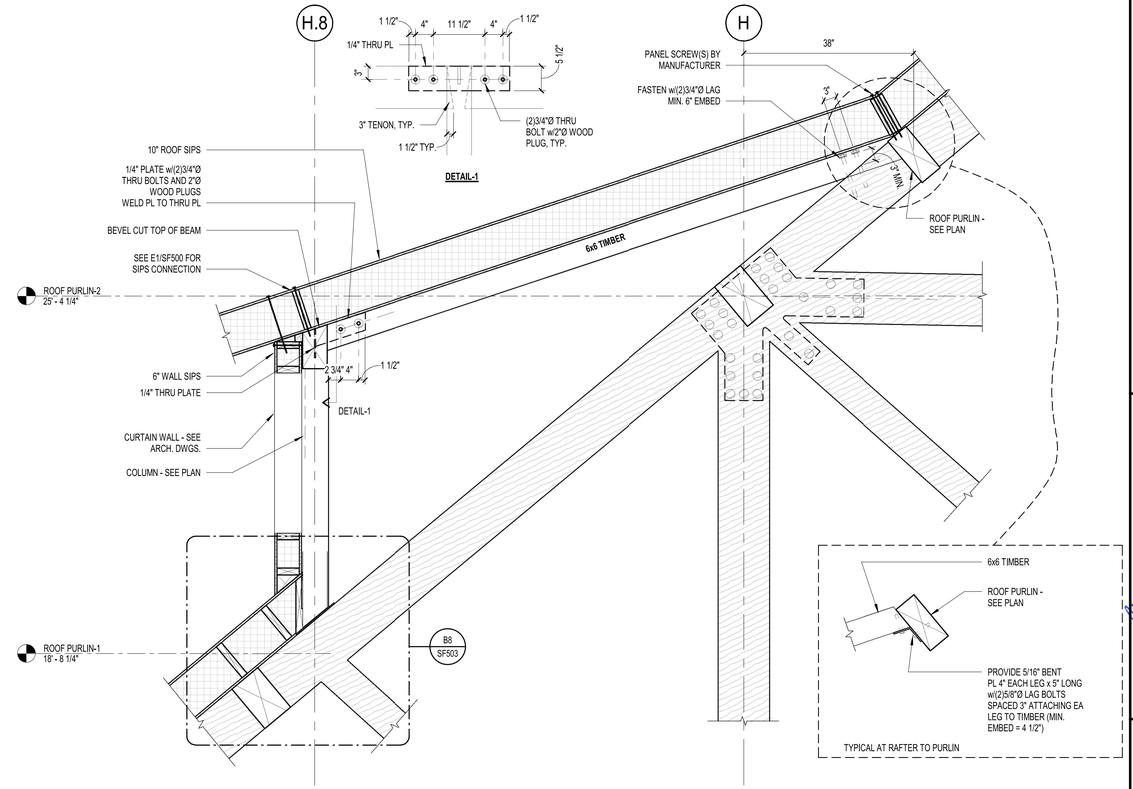

E6	DETAIL AT DORMER
3/4" = 1'-0"	

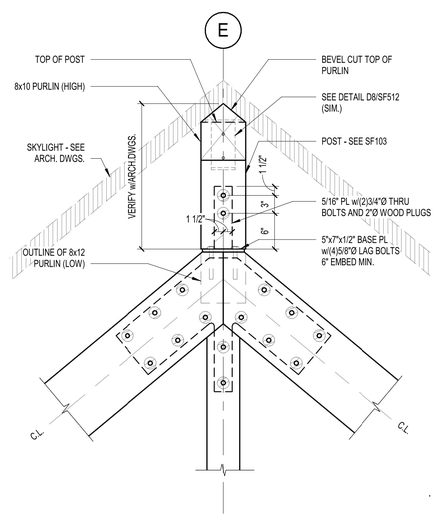

A5	DETAIL AT RIDGE - SKYLIGHT SUPPORT
1" = 1'-0"	

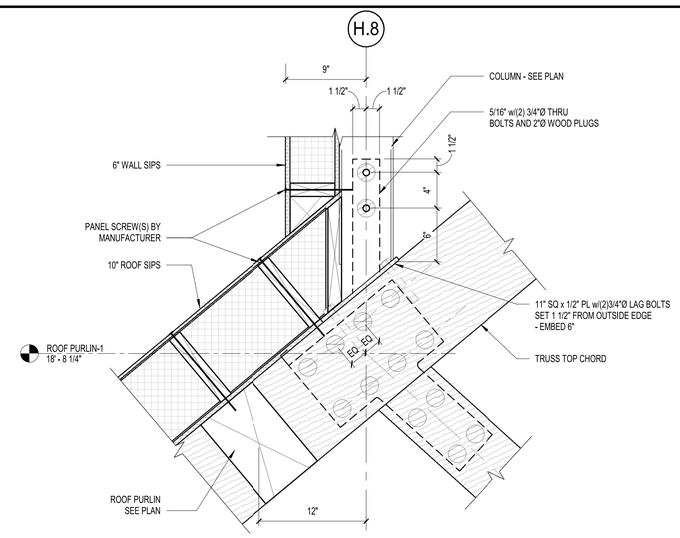

B8	DETAIL
1 1/2" = 1'-0"	

Allied Engineering
Structural Mechanical Electrical Plumbing
160 Veranda Street
Portland, Maine 04103
P: 207.221.2260
F: 207.221.2266
Web: www.allied-eng.com

Allied Project No: 12069 | Cad File: 12069S.rvt

AECOM
1 FEDERAL STREET, 8TH FLOOR
BOSTON, MA 02110
617.723.1700
www.aecom.com

STATE OF MAINE
DEPARTMENT OF TRANSPORTATION

DATE

FED PIN NO: NA
PIN NO: 017163.02 & 017163.03

STATE OF MAINE
WILLIAM P. FAUCHER
No. 7133
PROFESSIONAL ENGINEER

SIGNATURE
P.E. NUMBER 7133
DATE JANUARY 17, 2022

PROJECT INFORMATION

PROGRAM	–
PROJECT MANAGER	–
DESIGNER	AECOM
CONSULTANT	ALLIED ENGINEERING
PROJECT RESIDENT	–
CONTRACTOR	–
PROJECT COMPLETION DATE	–

MAINE DEPARTMENT OF TRANSPORTATION
ACADIA GATEWAY FACILITY
INTERMODAL AND WELCOME CENTER

STRUCTURAL – DETAILS

SHEET NUMBER
SF503

Filename: –
Division: –
Date: –
Username: –

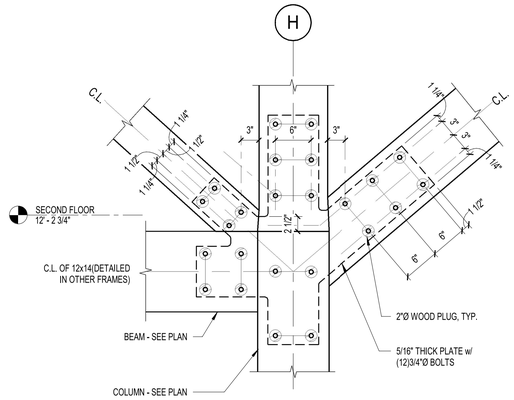

F1	CONNECTION DETAIL
1" = 1'-0"	

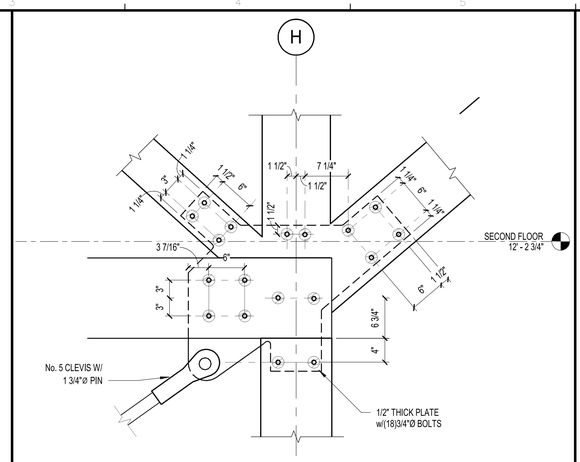

F4	CONNECTION DETAIL
1" = 1'-0"	

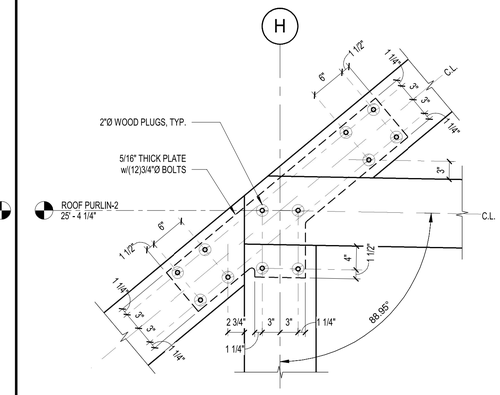

F6	CONNECTION DETAIL
1" = 1'-0"	

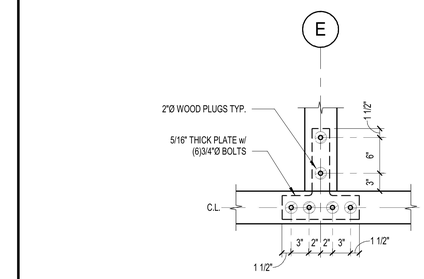

F9	CONNECTION DETAIL
1" = 1'-0"	

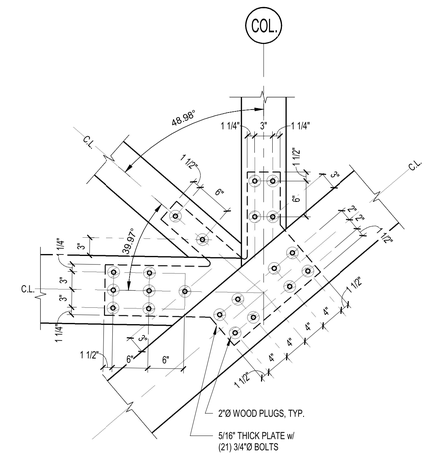

D1	CONNECTION DETAIL
1" = 1'-0"	

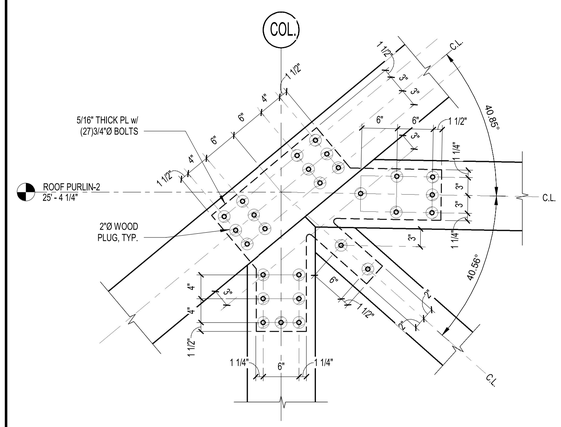

D4	CONNECTION DETAIL
1" = 1'-0"	

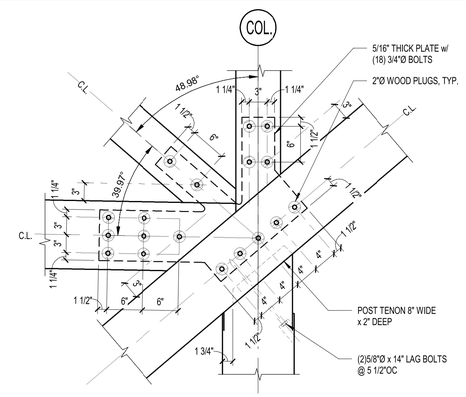

D6	CONNECTION DETAIL
1" = 1'-0"	

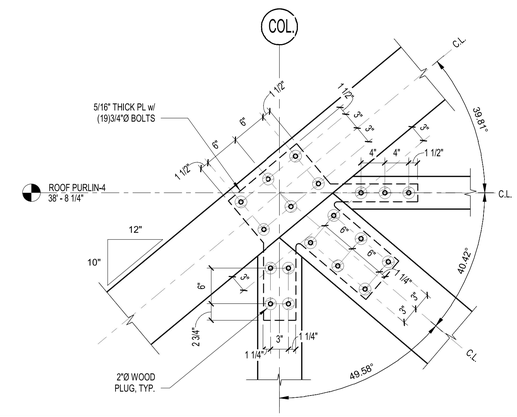

D9	CONNECTION DETAIL
1" = 1'-0"	

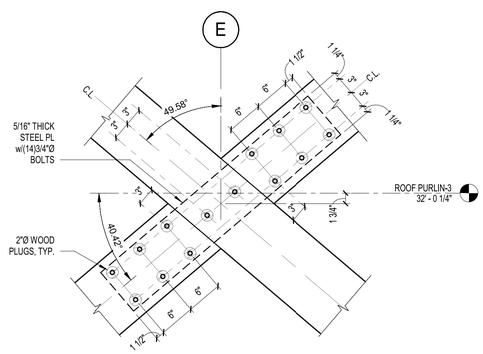

A1	CONNECTION DETAIL
1" = 1'-0"	

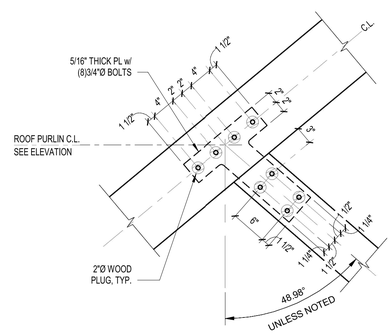

A4	CONNECTION DETAIL
1" = 1'-0"	

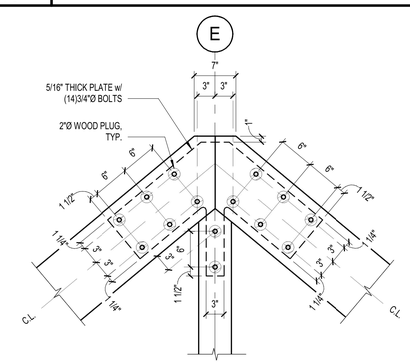

A6	CONNECTION DETAIL
1" = 1'-0"	

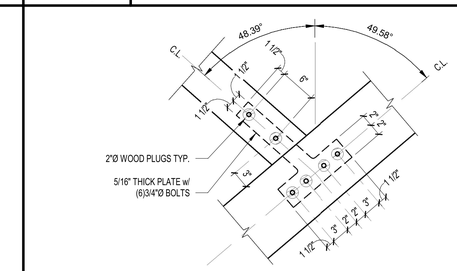

B9	CONNECTION DETAIL
1" = 1'-0"	

CONNECTION NOTES:

1. COUNTERSINK BOLT HEADS AND WASHERS AND BOLT NUTS AND WASHERS 1" AND PLUG HOLES.
2. USE 2"Ø COUNTERSINK HOLES
3. PROVIDE 1/2"Ø RADIUS AT CORNERS
4. PROVIDE 1/2" OVERCUT IN TIMBER AT PLATE ENDS

Allied Engineering
Structural Mechanical Electrical Plumbing
160 Veranda Street
Portland, Maine 04103
P: 207.221.2260
F: 207.221.2266
Web:www.allied-eng.com

Allied Project No: 12069 | Cad File: 12069S.rvt

AECOM
1 FEDERAL STREET, 8TH FLOOR
BOSTON, MA 02110
617.723.1700
www.aecom.com

STATE OF MAINE
DEPARTMENT OF TRANSPORTATION

	DATE

FED PIN NO: NA
PIN NO: 017163.02 & 017163.03

STATE OF MAINE · WILLIAM P. FAUCHER No. 7133 · PROFESSIONAL ENGINEER

SIGNATURE
P.E. NUMBER 7133
DATE JANUARY 17, 2022

PROJECT INFORMATION

PROGRAM	–
PROJECT MANAGER	–
DESIGNER	AECOM
CONSULTANT	ALLIED ENGINEERING
PROJECT RESIDENT	–
CONTRACTOR	–
PROJECT COMPLETION DATE	–

MAINE DEPARTMENT OF TRANSPORTATION
ACADIA GATEWAY FACILITY
INTERMODAL AND WELCOME CENTER
STRUCTURAL – TIMBER FRAME
CONNECTION DETAILS

SHEET NUMBER
SF510

Filename: – Date: – Division: – Username: –

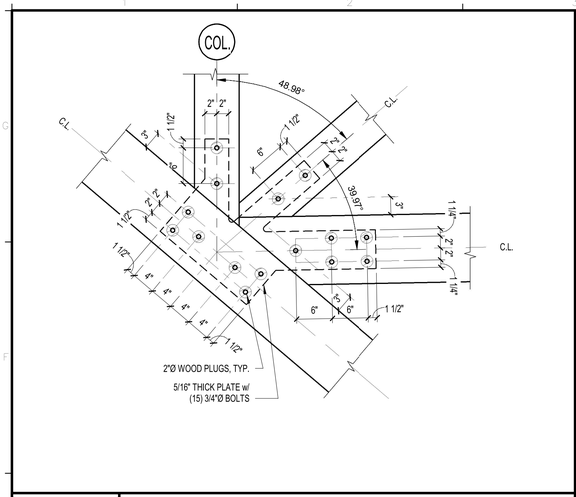

F1	CONNECTION DETAIL
1" = 1'-0"	

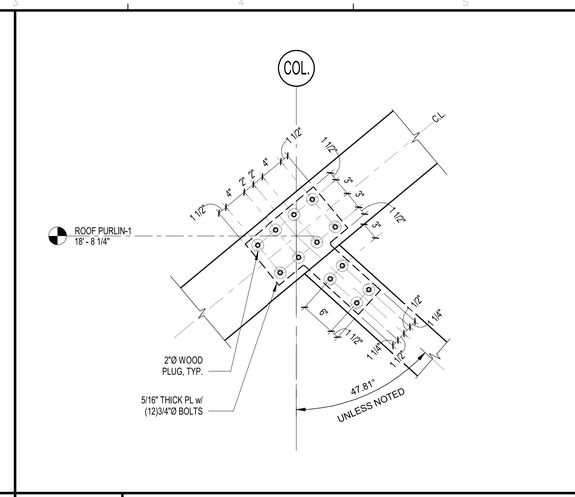

F4	CONNECTION DETAIL
1" = 1'-0"	

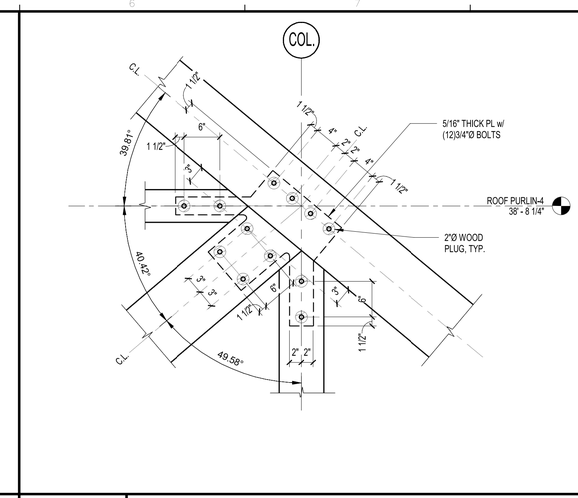

F6	CONNECTION DETAIL
1" = 1'-0"	

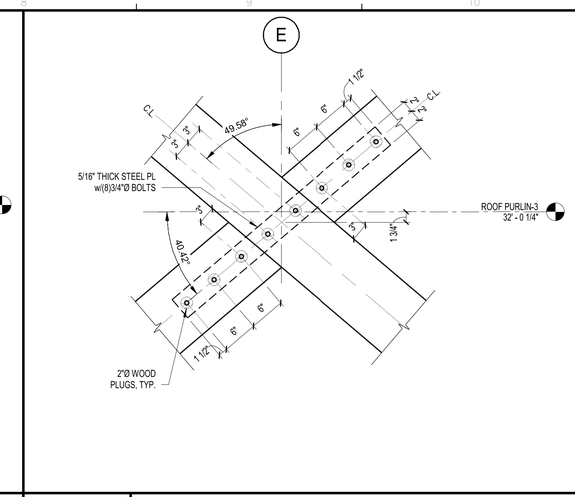

F9	CONNECTION DETAIL
1" = 1'-0"	

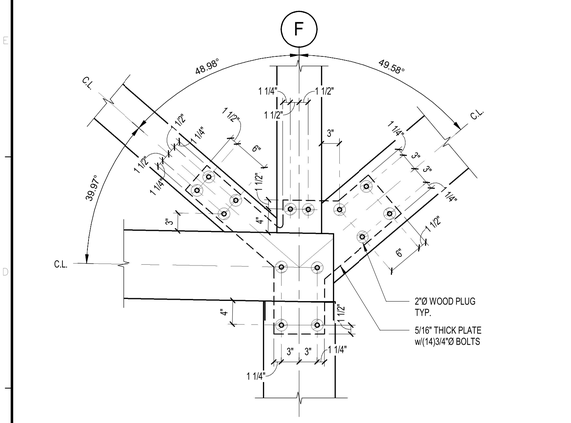

D1	CONNECTION DETAIL
1" = 1'-0"	

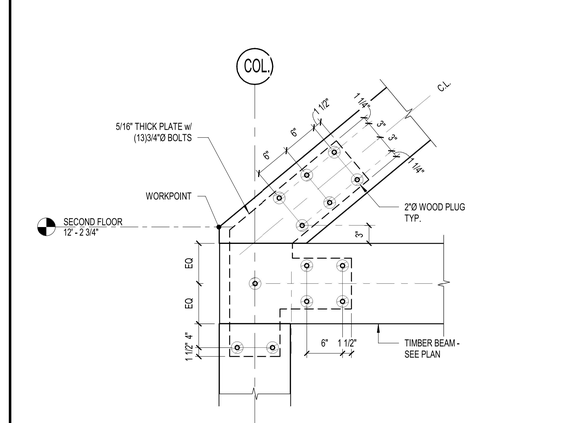

D4	CONNECTION DETAIL
1" = 1'-0"	

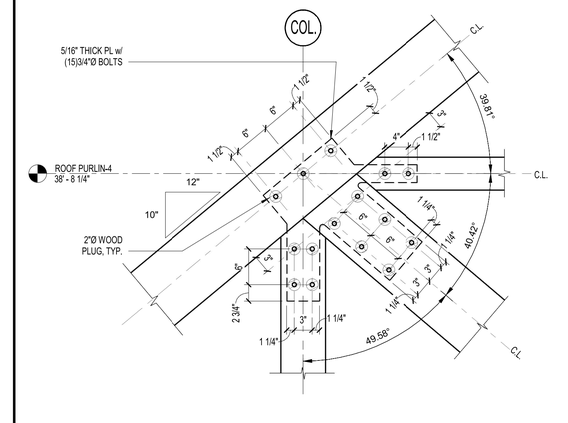

D6	CONNECTION DETAIL
1" = 1'-0"	

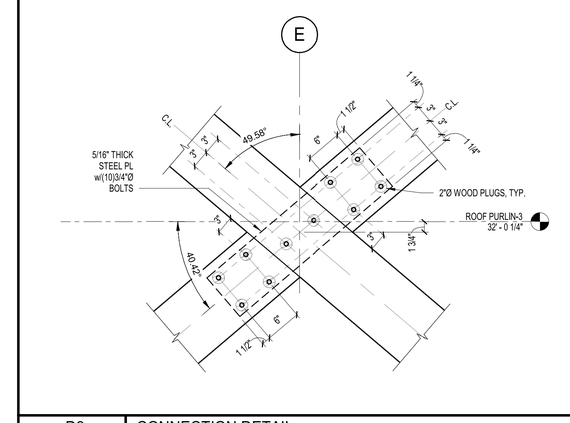

D9	CONNECTION DETAIL
1" = 1'-0"	

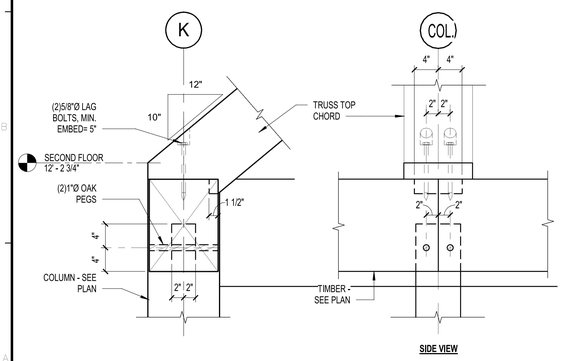

A1	CONNECTION DETAIL
1" = 1'-0"	

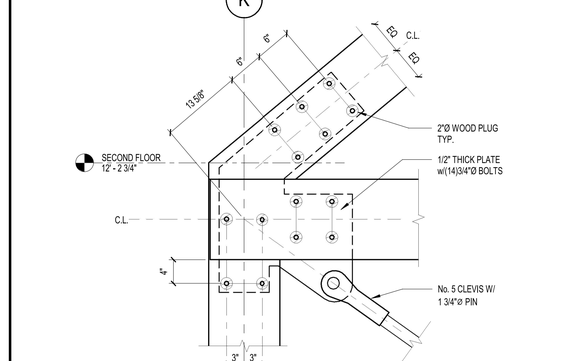

A4	CONNECTION DETAIL
1" = 1'-0"	

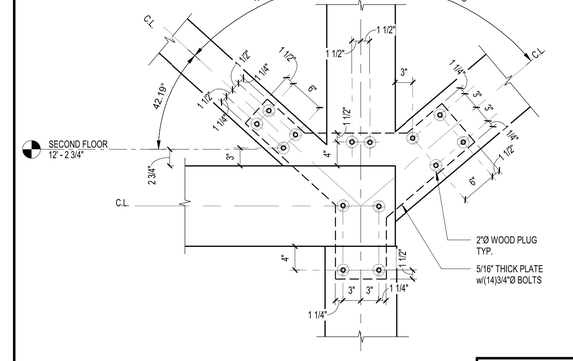

A6	CONNECTION DETAIL
1" = 1'-0"	

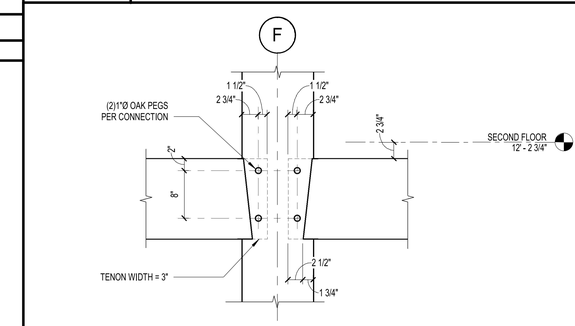

B9	CONNECTION DETAIL
1" = 1'-0"	

CONNECTION NOTES:

1. COUNTERSINK BOLT HEADS AND WASHERS AND BOLT NUTS AND WASHERS 1" AND PLUG HOLES.
2. USE 2"Ø COUNTERSINK HOLES
3. PROVIDE 1/2"Ø RADIUS AT CORNERS
4. PROVIDE 1/2" OVERCUT IN TIMBER AT PLATE ENDS

Allied Engineering
Structural Mechanical Electrical Plumbing
160 Veranda Street
Portland, Maine 04103
P: 207.221.2260
F: 207.221.2266
Web:www.allied-eng.com

Allied Project No: 12069 | Cad File: 12069S.rvt

AECOM
1 FEDERAL STREET, 8TH FLOOR
BOSTON, MA 02110
617.723.1700
www.aecom.com

STATE OF MAINE
DEPARTMENT OF TRANSPORTATION

	DATE

FED PIN NO: NA
PIN NO: 017163.02 & 017163.03

STATE OF MAINE · WILLIAM P. FAUCHER NO. 7133 · PROFESSIONAL ENGINEER

SIGNATURE

P.E. NUMBER 7133

DATE JANUARY 17, 2022

PROJECT INFORMATION

PROGRAM	–
PROJECT MANAGER	–
DESIGNER	AECOM
CONSULTANT	ALLIED ENGINEERING
PROJECT RESIDENT	–
CONTRACTOR	–
PROJECT COMPLETION DATE	–

MAINE DEPARTMENT OF TRANSPORTATION
ACADIA GATEWAY FACILITY
INTERMODAL AND WELCOME CENTER

STRUCTURAL – TIMBER FRAME
CONNECTION DETAILS

SHEET NUMBER
SF511

Filename: – Date: – Division: – Username: –

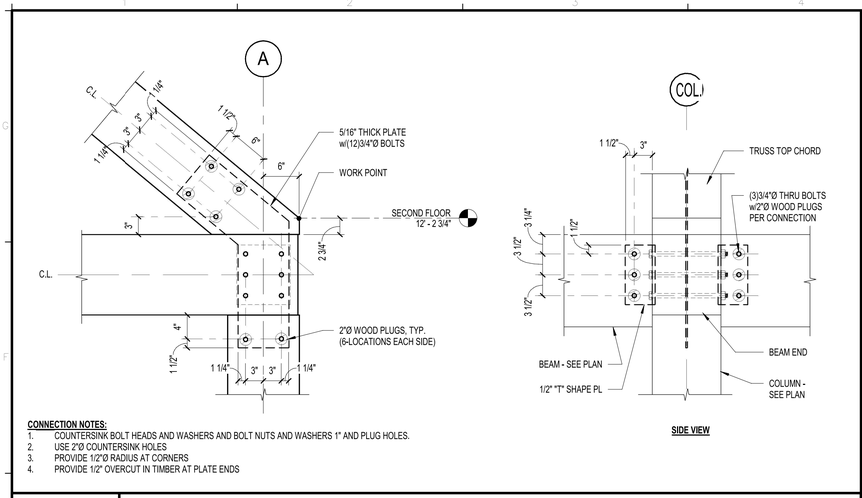

CONNECTION NOTES:
1. COUNTERSINK BOLT HEADS AND WASHERS AND BOLT NUTS AND WASHERS 1" AND PLUG HOLES.
2. USE 2"Ø COUNTERSINK HOLES
3. PROVIDE 1/2"Ø RADIUS AT CORNERS
4. PROVIDE 1/2" OVERCUT IN TIMBER AT PLATE ENDS

F1	CONNECTION DETAIL
1" = 1'-0"	

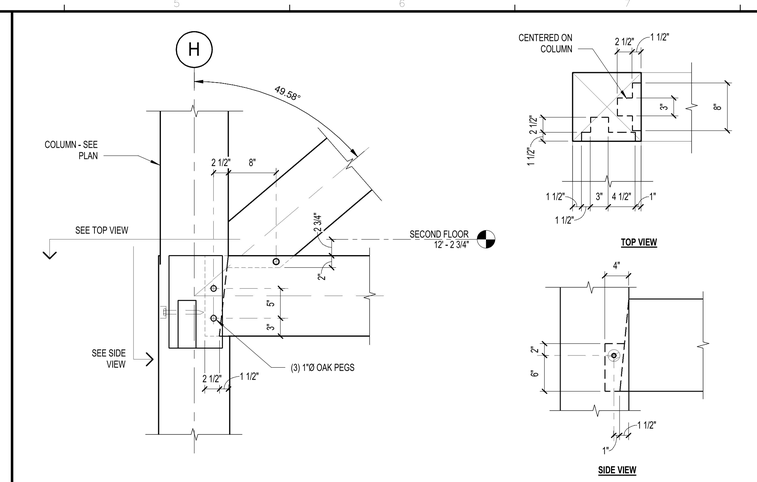

F5	CONNECTION DETAIL
1" = 1'-0"	

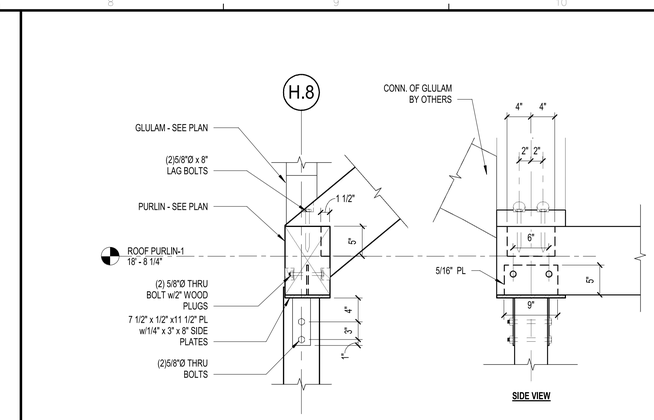

F8	CONNECTION DETAIL
1" = 1'-0"	

CONNECTION NOTES:
1. COUNTERSINK BOLT HEADS AND WASHERS AND BOLT NUTS AND WASHERS 1" AND PLUG HOLES.
2. USE 2"Ø COUNTERSINK HOLES
3. PROVIDE 1/2"Ø RADIUS AT CORNERS
4. PROVIDE 1/2" OVERCUT IN TIMBER AT PLATE ENDS

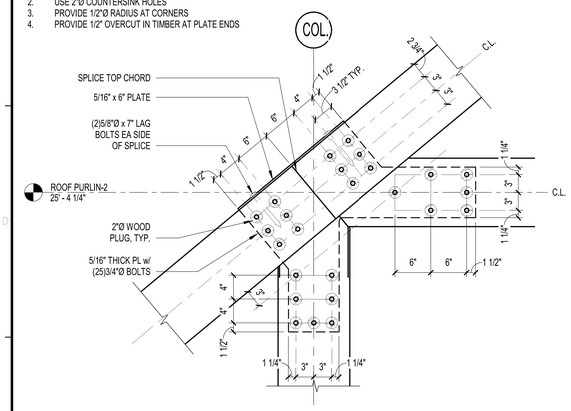

D1	CONNECTION DETAIL
1" = 1'-0"	

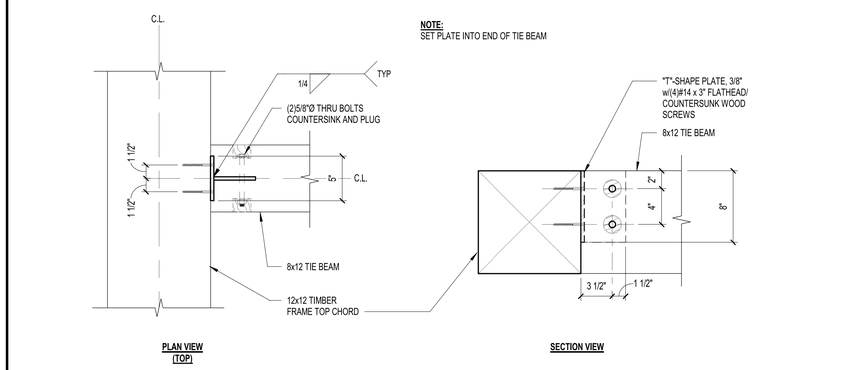

D4	TYPICAL TIE BEAM TO TIMBER FRAME BOTTOM CHORD
1 1/2" = 1'-0"	

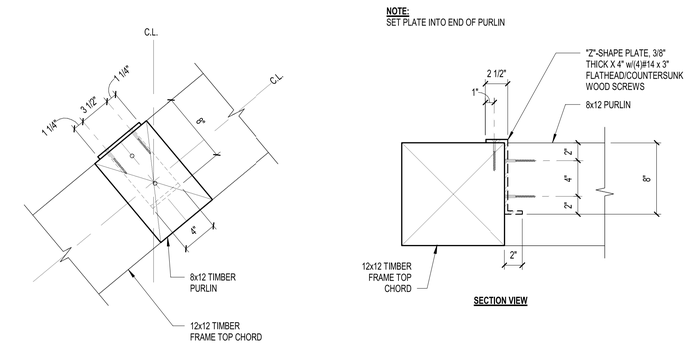

D8	TYPICAL ROOF PURLIN TO TIMBER FRAME TOP CHORD
1 1/2" = 1'-0"	

CONNECTION NOTES:
1. COUNTERSINK BOLT HEADS AND WASHERS AND BOLT NUTS AND WASHERS 1" AND PLUG HOLES.
2. USE 2"Ø COUNTERSINK HOLES
3. PROVIDE 1/2"Ø RADIUS AT CORNERS
4. PROVIDE 1/2" OVERCUT IN TIMBER AT PLATE ENDS

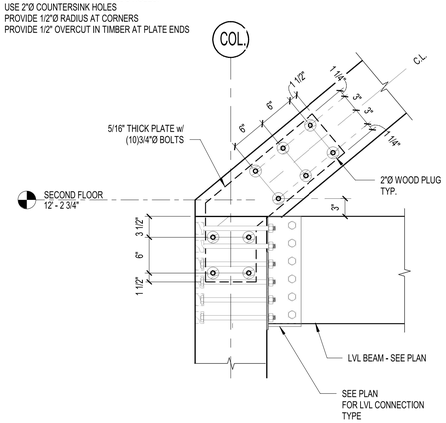

A1	CONNECTION DETAIL
1" = 1'-0"	

CONNECTION NOTES:
1. COUNTERSINK BOLT HEADS AND WASHERS AND BOLT NUTS AND WASHERS 1" AND PLUG HOLES.
2. USE 2"Ø COUNTERSINK HOLES
3. PROVIDE 1/2"Ø RADIUS AT CORNERS
4. PROVIDE 1/2" OVERCUT IN TIMBER AT PLATE ENDS

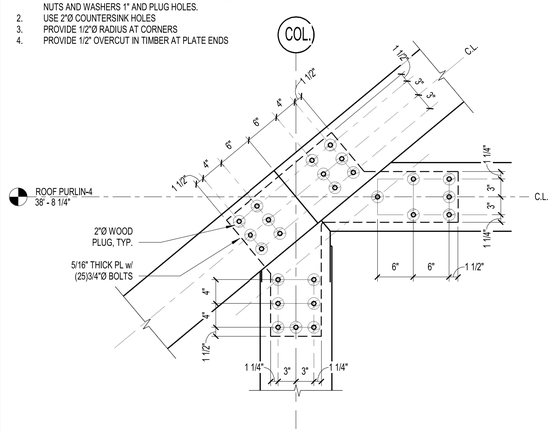

A4	CONNECTION DETAIL
1" = 1'-0"	

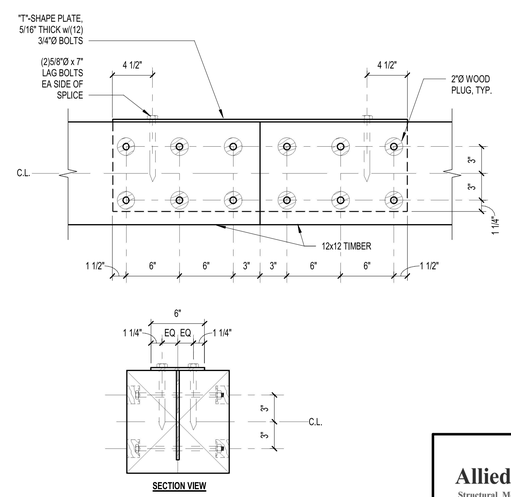

A6	TYPICAL CHORD SPLICE DETAIL
1 1/2" = 1'-0"	

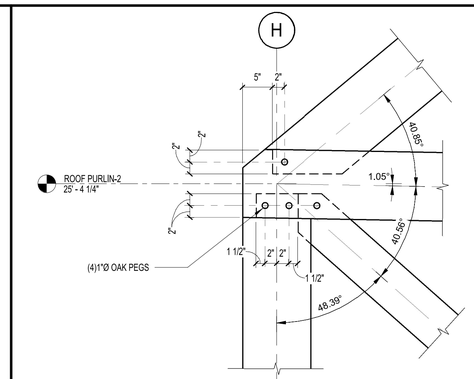

A9	CONNECTION DETAIL
1" = 1'-0"	

Allied Engineering
Structural Mechanical Electrical Plumbing
160 Veranda Street
Portland, Maine 04103
P: 207.221.2260
F: 207.221.2266
Web: www.allied-eng.com

Allied Project No: 12069 | Cad File: 12069S.rvt

AECOM
1 FEDERAL STREET, 8TH FLOOR
BOSTON, MA 02110
617.723.1700
www.aecom.com

STATE OF MAINE
DEPARTMENT OF TRANSPORTATION

DATE

FED PIN NO: NA
PIN NO: 017163.02 & 017163.03

STATE OF MAINE
WILLIAM P. FAUCHER
NO. 7133
PROFESSIONAL ENGINEER

SIGNATURE

P.E. NUMBER 7133

DATE JANUARY 17, 2022

PROJECT INFORMATION

PROGRAM	–	–
PROJECT MANAGER	–	–
DESIGNER	AECOM	–
CONSULTANT	ALLIED ENGINEERING	–
PROJECT RESIDENT	–	–
CONTRACTOR	–	–
PROJECT COMPLETION DATE	–	–

MAINE DEPARTMENT OF TRANSPORTATION
ACADIA GATEWAY FACILITY
INTERMODAL AND WELCOME CENTER
STRUCTURAL – TIMBER FRAME
CONNECTION DETAILS

SHEET NUMBER
SF512

Filename: –
Date: –
Division: –
Username: –

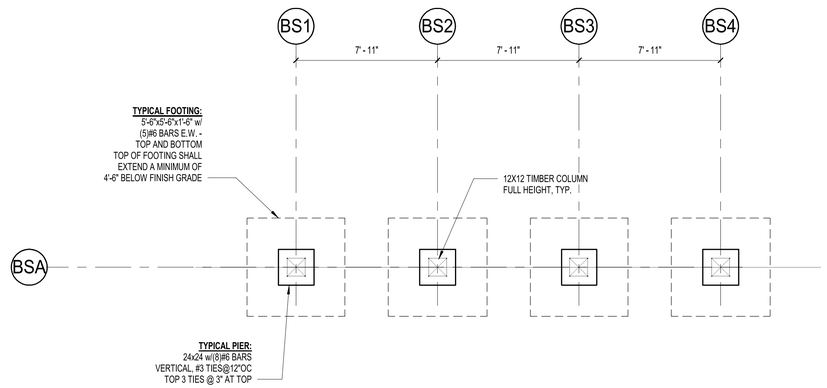

F1 | STRUCTURAL ~ BUS SHELTER FOUNDATION PLAN

1/4" = 1'-0"

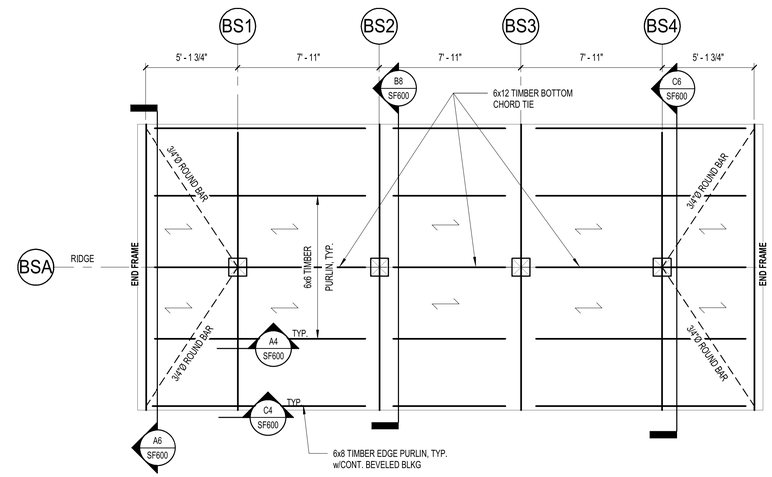

NOTES:

1. SEE SF601 FOR PURLIN AND TIE-BEAM CONNECTION DETAILS.
2. ROUND BAR SHALL HAVE A 2 1/2 CLEVIS w/ (1)3/4"Ø PIN AT EACH END ATTACHED TO EYEBOLTS PER DETAILS D1 AND A1/SF600. PROVIDE 3/4"Ø TURNBUCKLE

INDICATES DIRECTION OF 3X6 T&G WOOD DECKING

F6 | STRUCTURAL ~ BUS SHELTER FRAMING PLAN

1/4" = 1'-0"

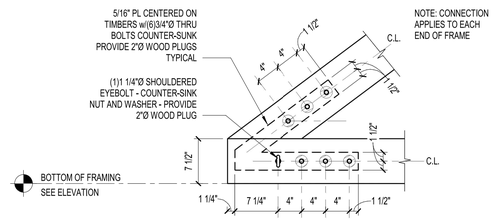

D1 | EYEBOLT CONNECTION AT LOW END

1" = 1'-0"

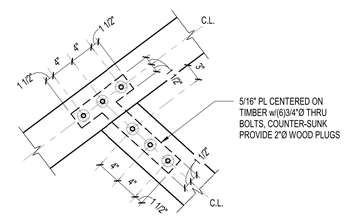

D4 | BUS SHELTER WEB TO TC CONNECTION

1" = 1'-0"

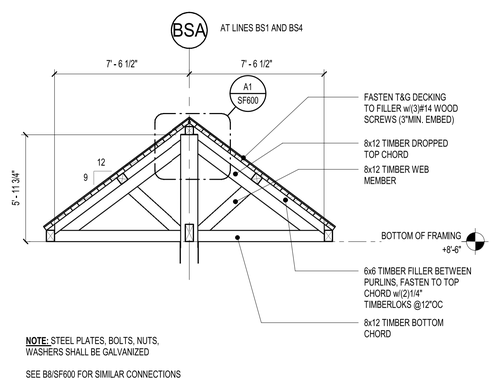

NOTE: STEEL PLATES, BOLTS, NUTS, WASHERS SHALL BE GALVANIZED

SEE B8/SF600 FOR SIMILAR CONNECTIONS

C6 | BUS SHELTER MAIN FRAME w/DROPPED TC

1/4" = 1'-0"

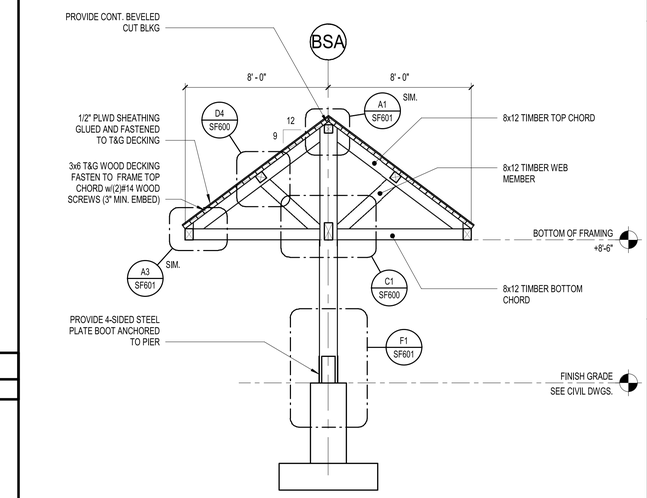

NOTE: STEEL PLATES, BOLTS, NUTS, WASHERS SHALL BE GALVANIZED

B8 | BUS SHELTER MAIN FRAME SECTION

1/4" = 1'-0"

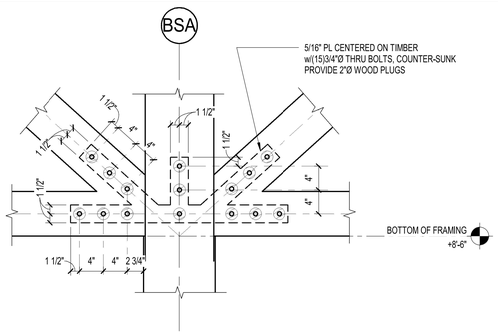

C1 | CONNECTION DETAIL

1" = 1'-0"

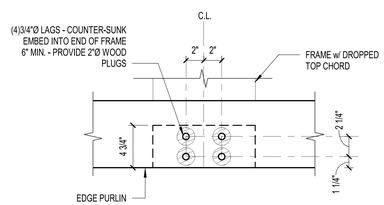

C4 | EDGE PURLIN AT DROPPED FRAME

1 1/2" = 1'-0"

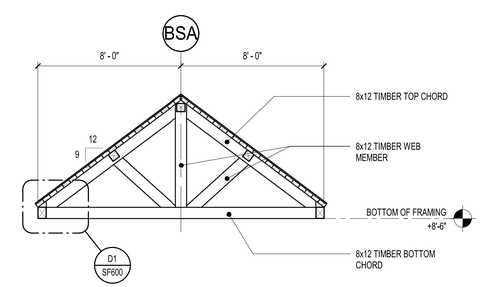

NOTE: STEEL PLATES, BOLTS, NUTS, WASHERS SHALL BE GALVANIZED

SEE B8/SF600 FOR SIMILAR CONNECTIONS

A6 | BUS SHELTER END FRAME

1/4" = 1'-0"

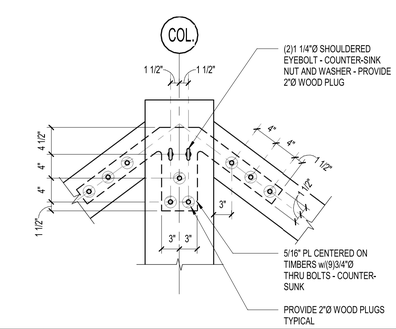

A1 | EYEBOLT CONNECTION AT RIDGE

1" = 1'-0"

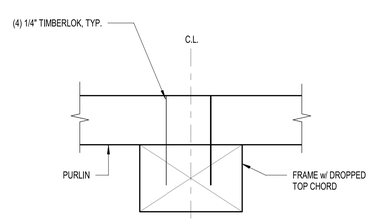

A4 | PURLIN AT DROPPED FRAME

1 1/2" = 1'-0"

Allied Engineering
Structural Mechanical Electrical Plumbing
160 Veranda Street
Portland, Maine 04103
P: 207.221.2260
F: 207.221.2266
Web:www.allied-eng.com

Allied Project No: 12069 | Cad File: 12069S.rvt

AECOM
1 FEDERAL STREET, 8TH FLOOR
BOSTON, MA 02110
617.723.1700
www.aecom.com

STATE OF MAINE
DEPARTMENT OF TRANSPORTATION

DATE

FED PIN NO: NA

PIN NO: 017163.02 & 017163.03

STATE OF MAINE
WILLIAM P. FAUCHER
No. 7133
LICENSED
PROFESSIONAL ENGINEER

SIGNATURE

P.E. NUMBER 7133

DATE JANUARY 17, 2022

PROJECT INFORMATION

PROGRAM	–
PROJECT MANAGER	–
DESIGNER	AECOM
CONSULTANT	ALLIED ENGINEERING
PROJECT RESIDENT	–
CONTRACTOR	–
PROJECT COMPLETION DATE	–

MAINE DEPARTMENT OF TRANSPORTATION
ACADIA GATEWAY FACILITY
INTERMODAL AND WELCOME CENTER

STRUCTURAL – BUS SHELTER
FRAMING PLANS AND DETAILS

SHEET NUMBER
SF600

Filename: –
Date: –
Division: –
Username: –

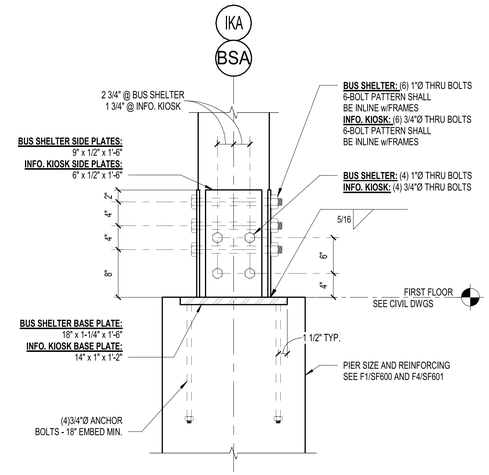

F1	POST BASE CONNECTION
1" = 1'-0"	

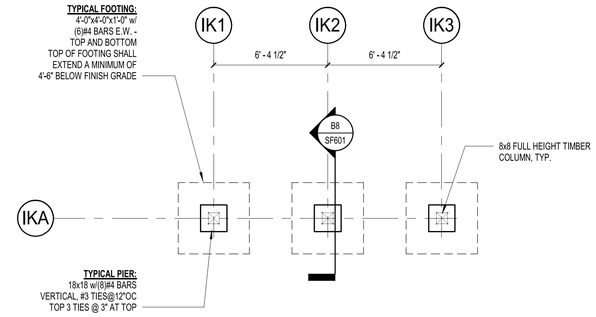

F4	STRUCTURAL ~ INFORMATION KIOSK FOUNDATION PLAN
1/4" = 1'-0"	

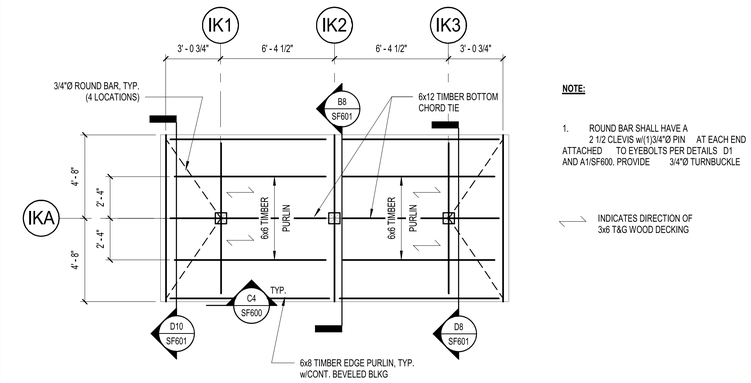

NOTE:

1. ROUND BAR SHALL HAVE A 2 1/2 CLEVIS w/(1)3/4"Ø PIN AT EACH END ATTACHED TO EYEBOLTS PER DETAILS D1 AND A1/SF600. PROVIDE 3/4"Ø TURNBUCKLE

INDICATES DIRECTION OF 3x6 T&G WOOD DECKING

F7	STRUCTURAL ~ INFORMATION KIOSK FRAMING PLAN
1/4" = 1'-0"	

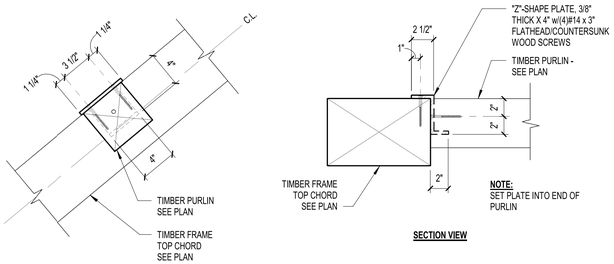

D1	PURLIN TO TIMBER FRAME TOP CHORD
1 1/2" = 1'-0"	

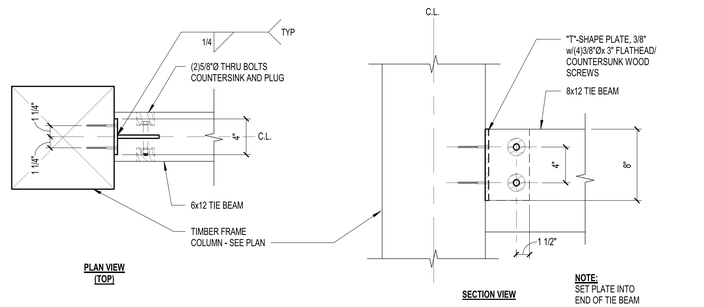

D4	TIE BEAM TO TIMBER FRAME BOTTOM CHORD
1 1/2" = 1'-0"	

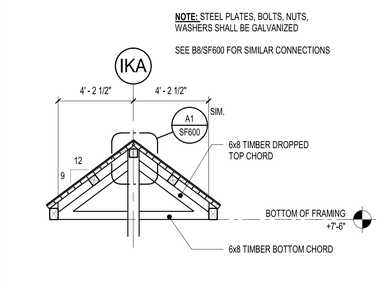

D8	SECTION AT DROPPED TC
1/4" = 1'-0"	

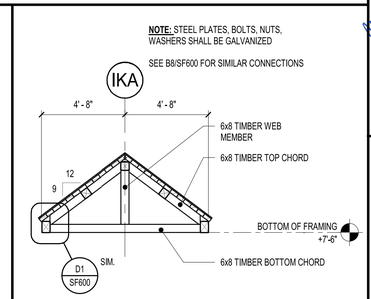

D10	SECTION AT END FRAME
1/4" = 1'-0"	

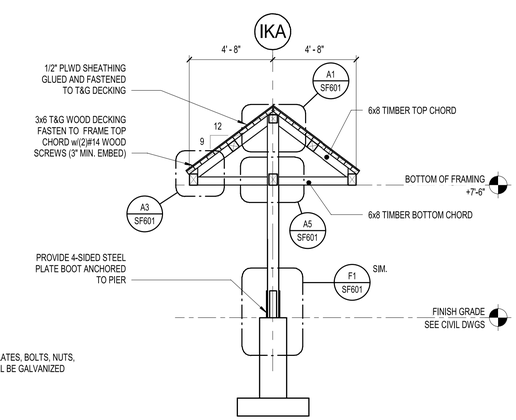

NOTE: STEEL PLATES, BOLTS, NUTS, WASHERS SHALL BE GALVANIZED

B8	INFORMATION KIOSK MAIN FRAME SECTION
1/4" = 1'-0"	

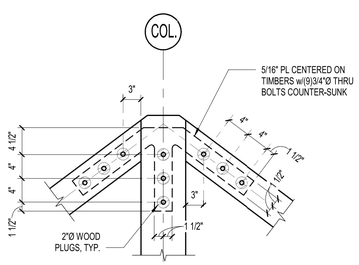

A1	DETAIL AT RIDGE
1" = 1'-0"	

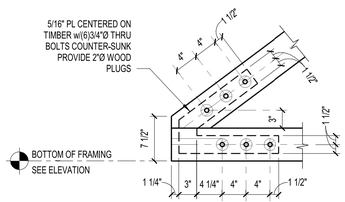

NOTE: CONNECTION APPLIES TO EACH END OF FRAME

A3	CONNECTION DETAIL
1" = 1'-0"	

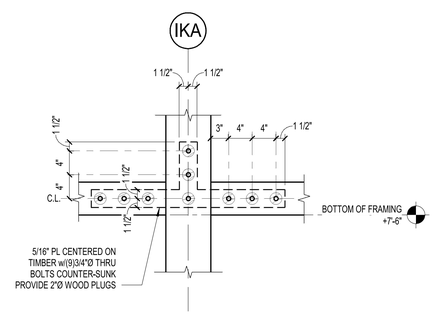

A5	CONNECTION DETAIL
1" = 1'-0"	

Allied Engineering
Structural Mechanical Electrical Plumbing
160 Veranda Street
Portland, Maine 04103
P: 207.221.2260
F: 207.221.2266
Web:www.allied-eng.com

AECOM
1 FEDERAL STREET, 8TH FLOOR
BOSTON, MA 02110
617.723.1700
www.aecom.com

Allied Project No: 12069 | Cad File: 12069S.rvt

STATE OF MAINE
DEPARTMENT OF TRANSPORTATION

DATE

FED PIN NO: NA
PIN NO: 017163.02 & 017163.03

STATE OF MAINE
WILLIAM P. FAUCHER
No. 7133
PROFESSIONAL ENGINEER

SIGNATURE

P.E. NUMBER
7133

DATE
JANUARY 17, 2022

PROJECT INFORMATION

PROGRAM	–	–
PROJECT MANAGER	–	–
DESIGNER	AECOM	–
CONSULTANT	ALLIED ENGINEERING	–
PROJECT RE-SIDENT	–	–
CONTRACTOR	–	–
PROJECT COMPLETION DATE	–	–

MAINE DEPARTMENT OF TRANSPORTATION
ACADIA GATEWAY FACILITY
INTERMODAL AND WELCOME CENTER

STRUCTURAL – INFO KIOSK
FRAMING PLANS AND DETAILS

SHEET NUMBER
SF601

Filename: –
Date: –
Division: –
Username: –

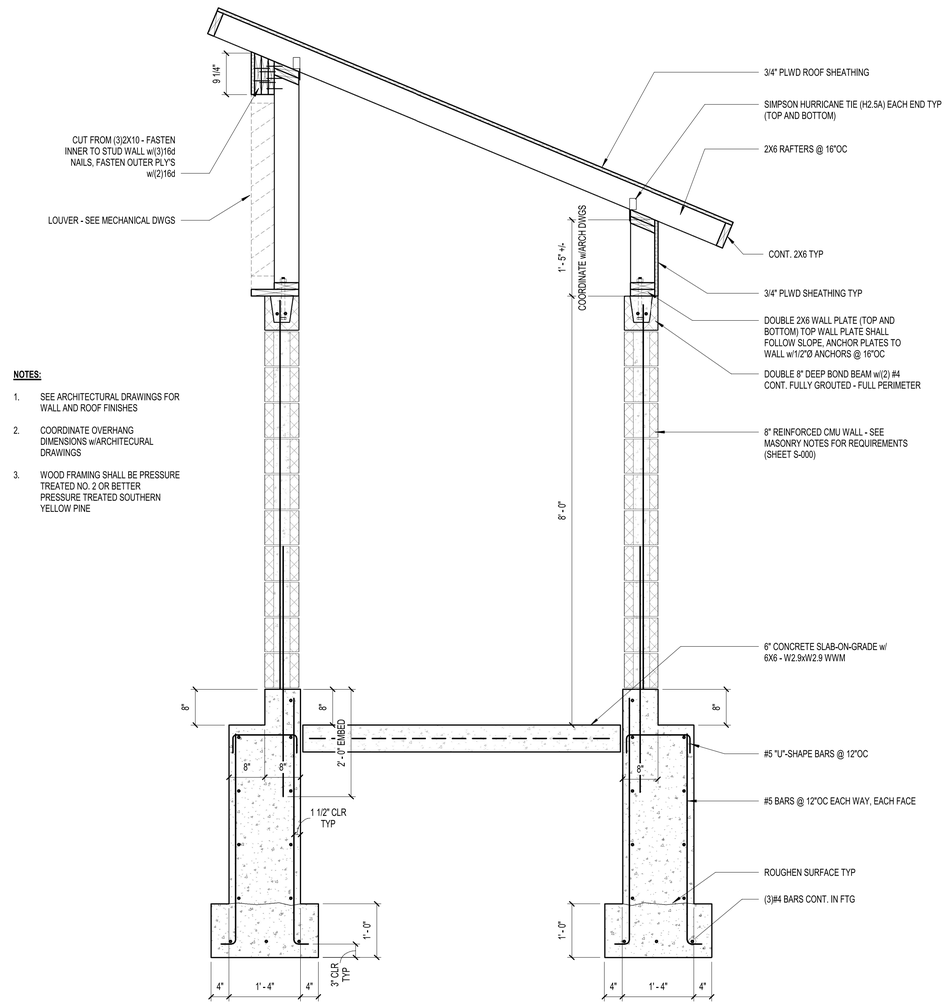

NOTES:

1. SEE ARCHITECTURAL DRAWINGS FOR WALL AND ROOF FINISHES
2. COORDINATE OVERHANG DIMENSIONS w/ARCHITECURAL DRAWINGS
3. WOOD FRAMING SHALL BE PRESSURE TREATED NO. 2 OR BETTER PRESSURE TREATED SOUTHERN YELLOW PINE

C4	CROSS SECTION
3/4" = 1'-0"	

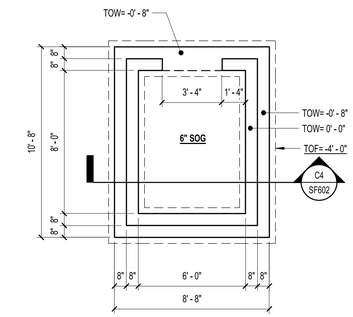

F9	FOUNDATION PLAN
1/4" = 1'-0"	

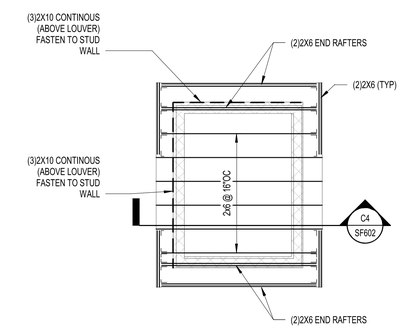

C9	ROOF FRAMING PLAN
1/4" = 1'-0"	

STATE OF MAINE
DEPARTMENT OF TRANSPORTATION

DATE

FED PIN NO: NA

PIN NO: 017163.02 & 017163.03

STATE OF MAINE
WILLIAM P. FAUCHER
No. 7133
LICENSED
PROFESSIONAL ENGINEER

SIGNATURE

P.E. NUMBER 7133

DATE JANUARY 17, 2022

PROJECT INFORMATION

PROGRAM	–
PROJECT MANAGER	–
DESIGNER	AECOM
CONSULTANT	ALLIED ENGINEERING
PROJECT RESIDENT	–
CONTRACTOR	–
PROJECT COMPLETION DATE	–

MAINE DEPARTMENT OF TRANSPORTATION
ACADIA GATEWAY FACILITY
INTERMODAL AND WELCOME CENTER

EV CHARGING ENCLOSURE
FRAMING PLANS AND DETAILS

SHEET NUMBER
SF602

Allied Engineering
Structural Mechanical Electrical Plumbing
160 Veranda Street
Portland, Maine 04103
P: 207.221.2260
F: 207.221.2266
Web: www.allied-eng.com

AECOM
1 FEDERAL STREET, 8TH FLOOR
BOSTON, MA 02110
617.723.1700
www.aecom.com

Allied Project No: 12069 | Cad File: 12069S.rvt

Filename: – Division: – Date: – Username: –

FIRE SPRINKLER NARRATIVE:

THE CONSTRUCTION OF A NEW VISITOR CENTER WILL REQUIRE AN AUTOMATIC SPRINKLER SYSTEM THROUGHOUT THE BUILDING IN ACCORDANCE WITH THE SPECIFICATION AND NFPA 13.

FIRE SPRINKLER NOTES:

1. THE CONTRACTOR SHALL REVIEW ALL PROJECT RELATED DOCUMENTATION PRIOR TO BIDDING AND BECOME INFORMED AS TO THE NATURE AND SCOPE OF WORK REQUIRED TO INSTALL FIRE SPRINKLERS. ALL ASSOCIATED WORK SHALL FORM PART OF BASE BID. NO EXTRA CONSIDERATIONS WILL BE GIVEN TO WORK NOT ACCOUNTED FOR IN BIDS.
2. SYSTEM SHALL BE DESIGNED / INSTALLED IN ACCORDANCE WITH THE FIRE SPRINKLER SPECIFICATION 21 13 13 AND NFPA 13.
3. A 3-INCH SPRINKLER RISER IS PROVIDED IN THE ENCLOSED STAIR.
4. FIRE ALARM DEVICES ARE SHOWN ON FIRE ALARM PLANS.
5. WATER STORAGE TANK SHALL BE DESIGNED AND INSTALLED BY OTHERS IN ACCORDANCE WITH NFPA 22 AND NFPA 72. THE TANK SHALL PROVIDE MINIMUM OF 20,000 GALLONS OF WATER STORAGE.
6. CONTRACTOR SHALL PROVIDE WATER FOR FIRE PUMP TESTING. IN ADDITION, TANK SHALL BE LEFT FULL AFTER TESTING AND COMMISSIONING.

HYDRAULIC INFORMATION

NFPA HAZARD	LIGHT & ORDINARY HAZARDS
SYSTEM TYPE	WET PIPE
FIRE PUMP	MIN 500 GPM AT 110 PSI
WATER SUPPLY	TANK (20,000 GALLONS)
TOTAL DEMAND: @ WATER SUPPLY CONECTION	DESIGN AREA 1: 391 GPM @ 75 PSI DURATION 30 MIN. (~12,000 GAL) DESIGN AREA 2: 310 GPM @ 66 PSI DURATION 60 MIN. (~19,000)

NOTE:
FIRE STOPPING METHOD BASED ON HILTI UL SYSTEM WL1058. REFER TO MFG LITERATURE FOR SPECIFIC PRODUCT LIMITATIONS. SUBSTITUTE OTHER UL APPROVED FIRE STOPPING METHODS, IF NECESSARY, TO MEET REQUIREMENTS OF INSTALLATION

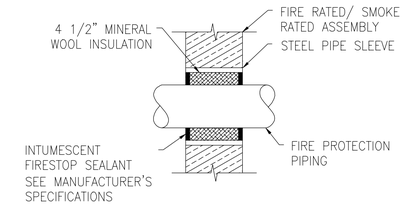

FIRE/SMOKE RATED ASSEMBLY THROUGH PENETRATION DETAIL — F3 / FX001

FIRE SPRINKLER SYMBOLS:

- NEW EXPOSED UPRIGHT SPRINKLER
- NEW CONCEALED PENDENT SPRINKLER
- NEW SIDE WALL SPRINKLER
- NEW DRY SIDE WALL SPRINKLER
- FIRE PROTECTION/SPRINKLER PIPING
- RISE OR DROP
- SUPPLY RISER
- CHECK VALVE
- OS&Y GATE VALVE (WITH TAMPER SWITCH)
- HYDRAULIC REFERENCE POINT
- STORZ CONNECTION (FDC OR TANK FILL)
- FIRE PUMP TEST HEADER

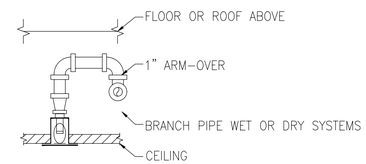

CONCEALED PENDENT ARM-OVER DETAIL — F2 / FX001

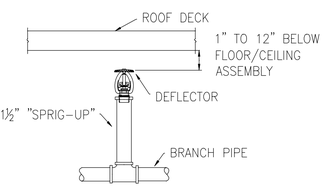

UPRIGHT SPRINKLER DETAIL — F4 / FX001

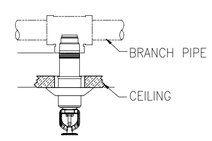

DRY PENDENT SPRINKLER DETAIL — F6 / FX001

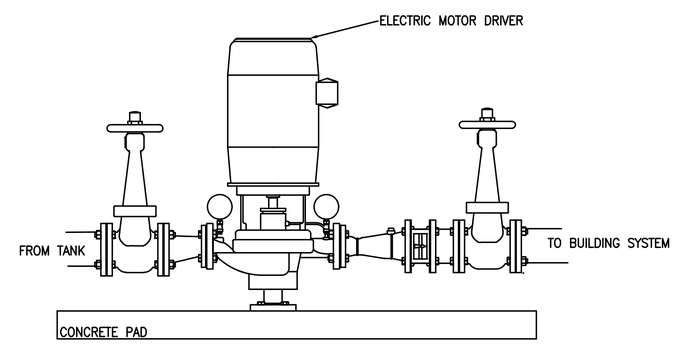

VERTICAL SPLIT CASE FIRE PUMP DETAIL — F5 / FX001

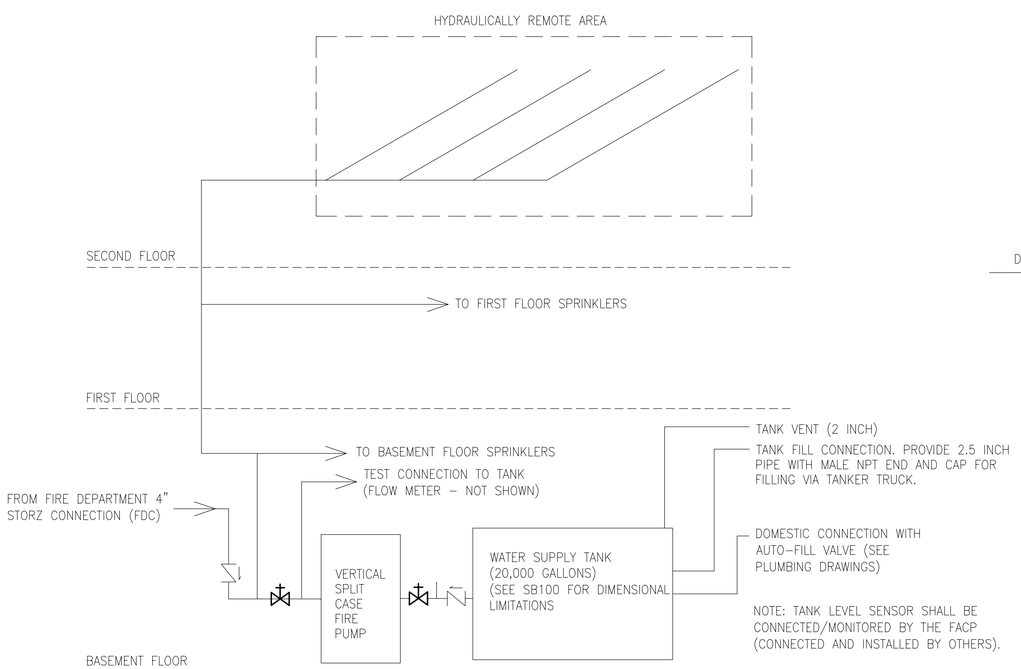

RISER DIAGRAM — F1 / FX001

GRAPHIC SCALE
1/8"=1'-0"
8' 4' 0 8' 16'
CHECK GRAPHIC SCALE BEFORE USING

PROJECT KEY PLAN

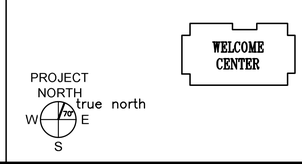

FISHER ENGINEERING
40 Main Street | Suite 13-140 |
Biddeford, ME 04005 |
PH: (207) 442-7200 | www.fisfire.com

AECOM
1 FEDERAL STREET, 8TH FLOOR
BOSTON, MA 02110
617.723.1700
www.aecom.com

STATE OF MAINE
DEPARTMENT OF TRANSPORTATION

DATE

FED PIN NO: NA

WIN NO: 017163.02 & 017163.03

STATE OF MAINE
JAMES S. MCLEAN
No. 15721
LICENSED
PROFESSIONAL ENGINEER
01/17/22

PROJECT INFORMATION		SIGNATURE
PROGRAM	–	–
PROJECT MANAGER	–	ARCH. LIN. NUMBER
DESIGNER	AECOM	–
CONSULTANT	FISHER ENGINEERING	
PROJECT RESIDENT	–	DATE
CONTRACTOR	–	JANUARY 17, 2022
PROJECT COMPLETION DATE	–	

MAINE DEPARTMENT OF TRANSPORTATION
ACADIA GATEWAY FACILITY
INTERMODAL AND WELCOME CENTER

FIRE SPRINKLER PLAN
NOTES AND DETAILS

SHEET NUMBER
FX001

R:\Projects\2021\21114 - Acadia Gateway\Drawings\2021 - Update\FX001.dwg Jan 04, 2022 - 1:32pm

FIRE SPRINKLER TANK NOTES:

1. TANK SIZE LIMITATION IS SHOWN ON SB100.
2. TANK SHALL COMPLY WITH NFPA 22 AND NFPA 72.

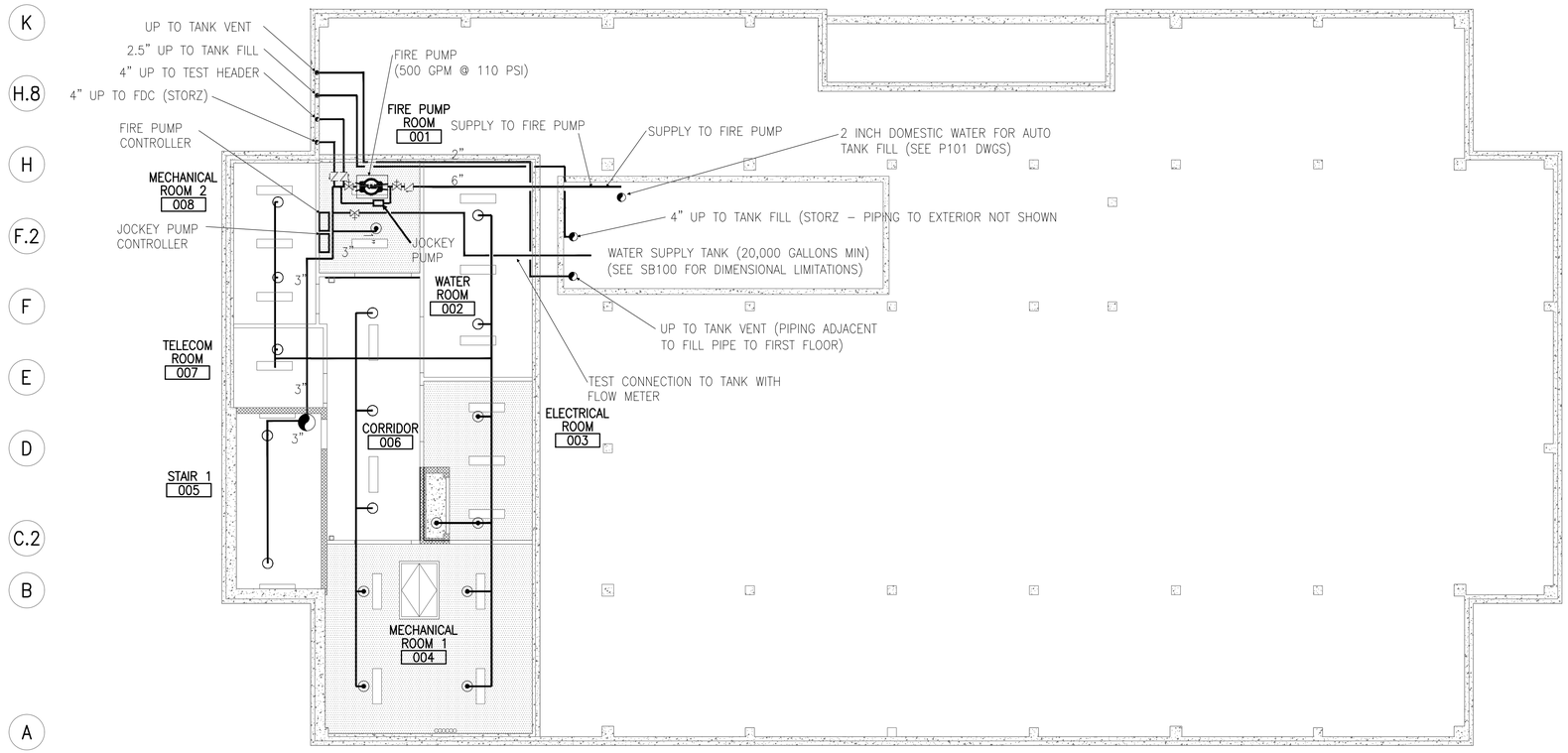

1 BASEMENT FIRE SPRINKLER PLAN
1/8"=1'-0"

GRAPHIC SCALE
1/8"=1'-0"
8' 4' 0 8' 16'
CHECK GRAPHIC SCALE BEFORE USING

PROJECT KEY PLAN

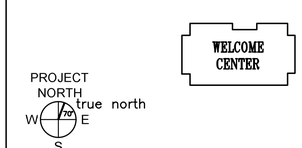

FISHER ENGINEERING
40 Main Street | Suite 13-140 |
Biddeford, ME 04005 |
PH: (207) 442-7200 | www.fisher.com

AECOM
1 FEDERAL STREET, 8TH FLOOR
BOSTON, MA 02110
617.723.1700
www.aecom.com

STATE OF MAINE
DEPARTMENT OF TRANSPORTATION

	DATE

FED PIN NO: NA
WIN NO: 017163.02 & 017163.03

STATE OF MAINE
JAMES S. MCLEAN
No. 15721
LICENSED
PROFESSIONAL ENGINEER
01/17/22

PROJECT INFORMATION		SIGNATURE
PROGRAM	–	–
PROJECT MANAGER	–	ARCH. LIN. NUMBER
DESIGNER	AECOM	–
CONSULTANT	FISHER ENGINEERING	DATE
PROJECT RESIDENT	–	JANUARY 17, 2022
CONTRACTOR	–	
PROJECT COMPLETION DATE	–	

MAINE DEPARTMENT OF TRANSPORTATION
ACADIA GATEWAY FACILITY
INTERMODAL AND WELCOME CENTER

FIRE SPRINKLER PLAN
BASEMENT FLOOR

SHEET NUMBER
FX100

R:\Projects\2021\21114 - Acadia Gateway\Drawings\2021 - Update\FX100.dwg Jan 04, 2022 - 1:32pm

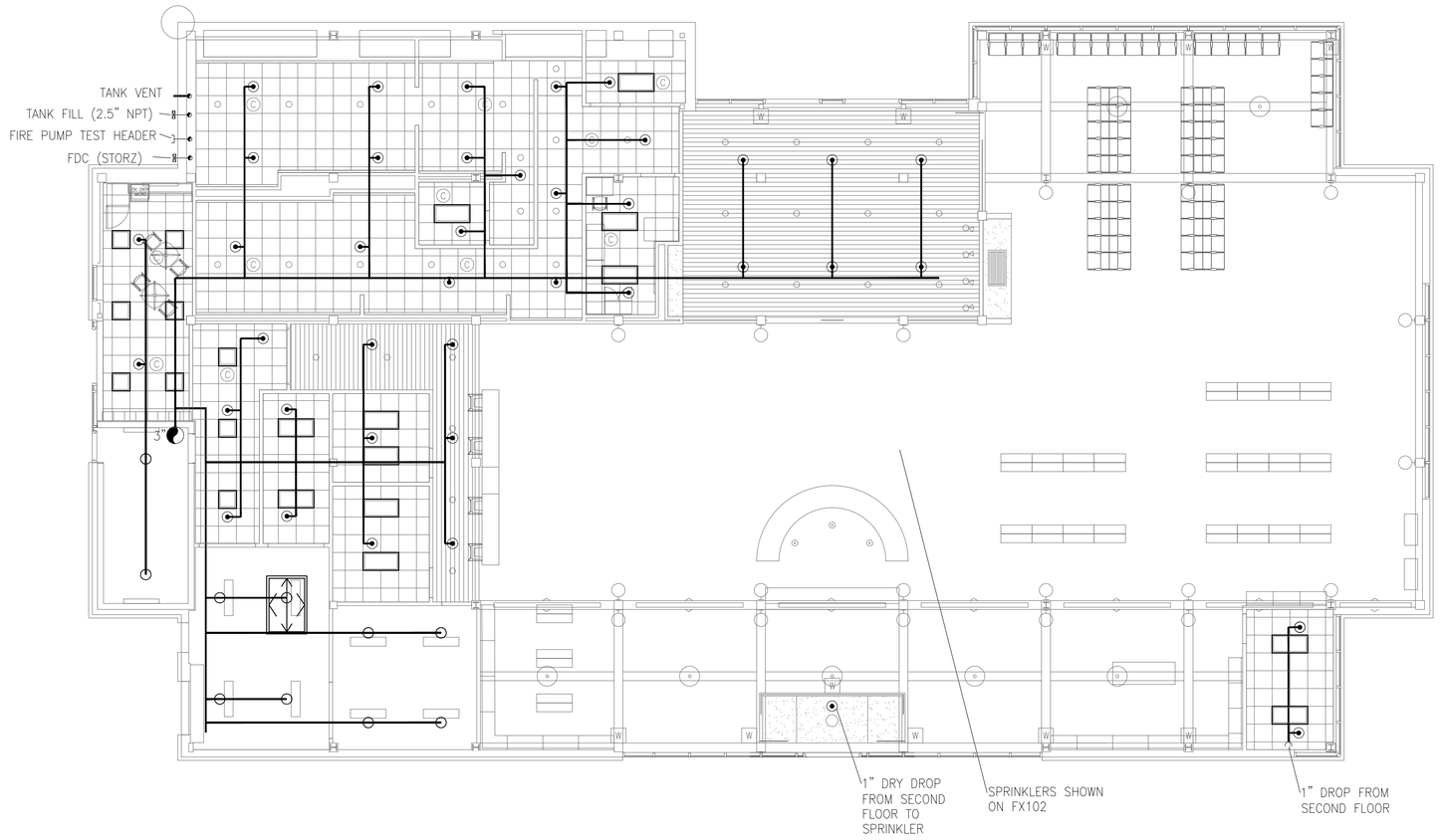

1 FIRST FLOOR FIRE SPRINKLER PLAN
1/8"=1'-0"

GRAPHIC SCALE
1/8"=1'-0"
8' 4' 0 8' 16'
CHECK GRAPHIC SCALE BEFORE USING

PROJECT KEY PLAN

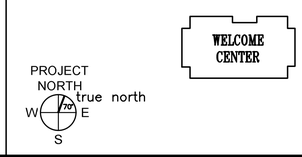

FISHER ENGINEERING
40 Main Street | Suite 13-140 |
Biddeford, ME 04005 |
PH: (207) 442-7200 | www.fisfire.com

AECOM
1 FEDERAL STREET, 8TH FLOOR
BOSTON, MA 02110
617.723.1700
www.aecom.com

STATE OF MAINE
DEPARTMENT OF TRANSPORTATION

DATE

FED PIN NO: NA
WIN NO: 017163.02 & 017163.03

STATE OF MAINE
JAMES E. MCLEAN
No. 15721
LICENSED
PROFESSIONAL ENGINEER
01/17/22

PROJECT	INFORMATION
PROGRAM	–
PROJECT MANAGER	–
DESIGNER	AECOM
CONSULTANT	FISHER ENGINEERING
PROJECT RESIDENT	–
CONTRACTOR	–
PROJECT COMPLETION DATE	–

SIGNATURE
–
ARCH. LIN. NUMBER
–
DATE JANUARY 17, 2022

MAINE DEPARTMENT OF TRANSPORTATION
ACADIA GATEWAY FACILITY
INTERMODAL AND WELCOME CENTER

FIRE SPRINKLER PLAN
FIRST FLOOR

SHEET NUMBER
FX101

R:\Projects\2021\21114 - Acadia Gateway\Drawings\2021 - Update\FX101.dwg Jan 04, 2022 - 1:32pm

FIRE SPRINKLER NOTES:

1. SPRINKLER PIPING AT CEILING SHALL BE ATTACHED TIGHT TO THE UNDERSIDE OF THE TOP CORD OF THE ROOF TRUSSES.

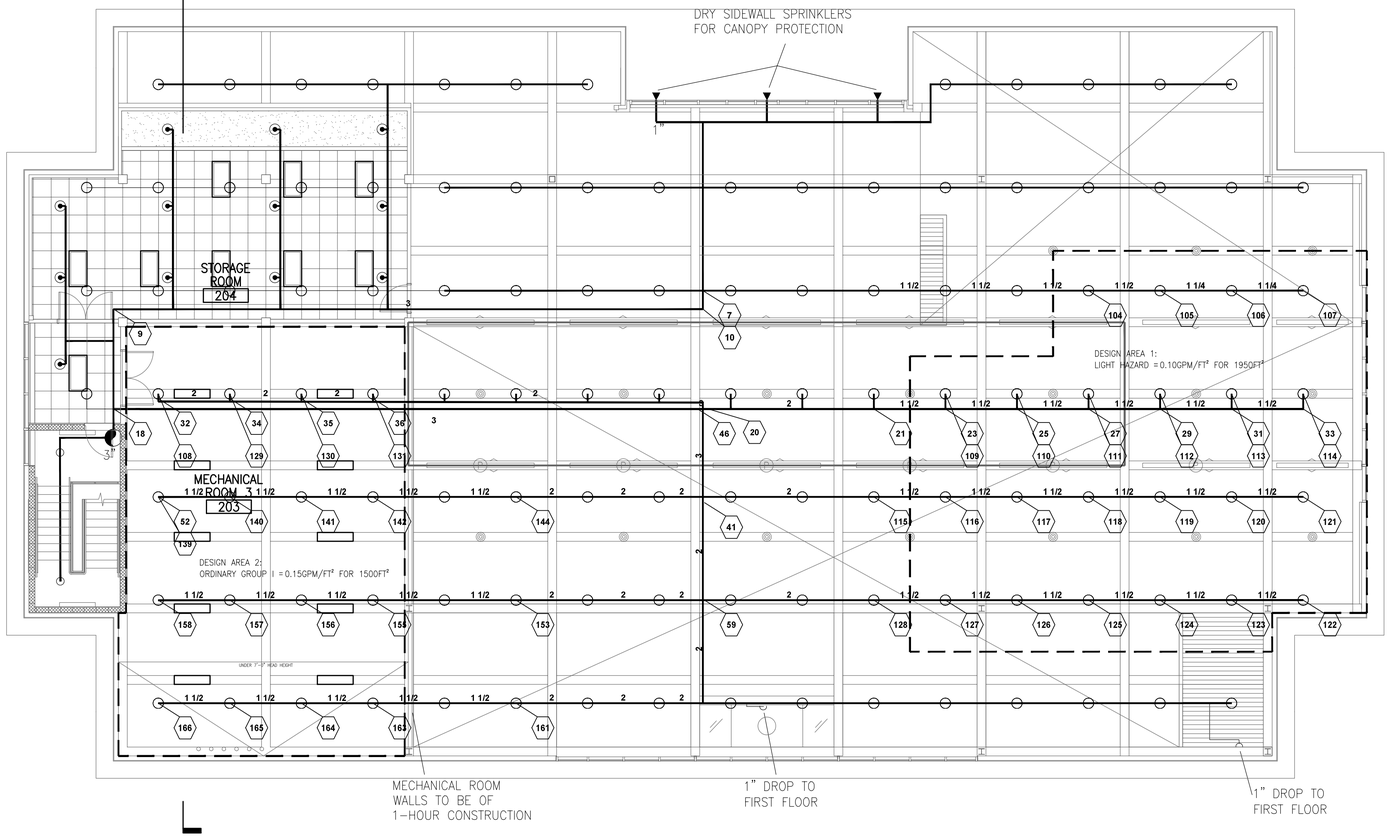

1 SECOND FLOOR FIRE SPRINKLER PLAN
1/8"=1'-0"

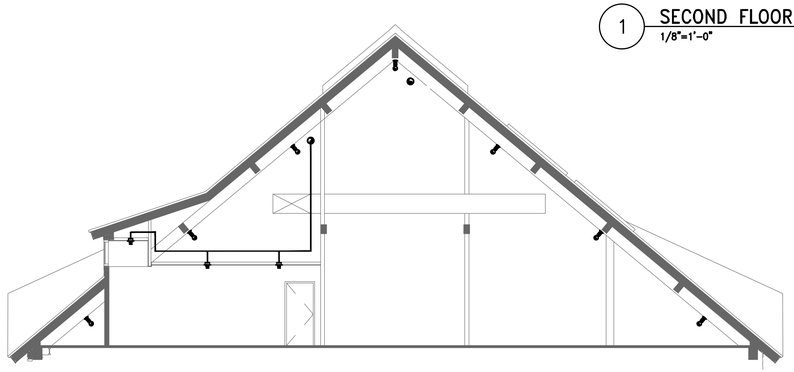

2 UPPER STORAGE SECTION
1/8"=1'-0"

HYDRAULIC CALCULATIONS

DESIGN AREA 1 – OPEN SPACE

NFPA HAZARD	LIGHT HAZARD
SYSTEM TYPE	WET PIPE
FIRE PUMP	MIN 500 GPM AT 110 PSI
WATER SUPPLY	TANK (20,000 GALLONS)
CALCULATED DENSITY	0.10 GPM/SQ.FT.
REMOTE AREA SIZE	~1950 SQ. FT.
COVERAGE PER HEAD	MAX. 120 SQ.FT.
TOTAL DEMAND: @ WATER SUPPLY CONECTION	391 GPM @ 75 PSI

HYDRAULIC CALCULATIONS

DESIGN AREA 2 – MECHANICAL ROOM

NFPA HAZARD	ORDINARY HAZARD
SYSTEM TYPE	WET PIPE
FIRE PUMP	MIN 500 GPM AT 110 PSI
WATER SUPPLY	TANK (20,000 GALLONS)
CALCULATED DENSITY	0.10 GPM/SQ.FT.
REMOTE AREA SIZE	1500 SQ. FT. (ROOM METHOD)
COVERAGE PER HEAD	MAX. 120 SQ.FT.
TOTAL DEMAND: @ WATER SUPPLY CONECTION	310 GPM @ 66 PSI

GRAPHIC SCALE
8' 4' 0 8' 16'
1/8"=1'-0"
CHECK GRAPHIC SCALE BEFORE USING

PROJECT KEY PLAN

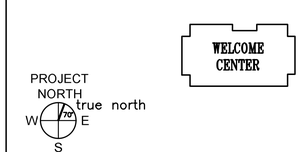

FISHER ENGINEERING
40 Main Street | Suite 13-140 |
Biddeford, ME 04005 |
PH: (207) 442-7200 | www.fisfire.com

AECOM
1 FEDERAL STREET, 8TH FLOOR
BOSTON, MA 02110
617.723.1700
www.aecom.com

STATE OF MAINE
DEPARTMENT OF TRANSPORTATION

DATE

FED PIN NO: NA

WIN NO: 017163.02 & 017163.03

STATE OF MAINE
JAMES S. MCLEAN
No. 15721
LICENSED
PROFESSIONAL ENGINEER
01/17/22

INFORMATION		
PROJECT	–	–
PROGRAM	–	–
PROJECT MANAGER	AECOM	
DESIGNER	FISHER ENGINEERING	–
CONSULTANT	–	–
PROJECT RESIDENT	–	–
CONTRACTOR	–	–
PROJECT COMPLETION DATE	–	–

SIGNATURE –

ARCH. LIN. NUMBER –

DATE JANUARY 17, 2022

MAINE DEPARTMENT OF TRANSPORTATION
ACADIA GATEWAY FACILITY
INTERMODAL AND WELCOME CENTER

FIRE SPRINKLER PLAN
SECOND FLOOR

SHEET NUMBER
FX102

R:\Projects\2021\21114 - Acadia Gateway\Drawings\2021 - Update\FX102.dwg Jan 04, 2022 - 1:32pm

PIPE ELBOW TURNED DN
PIPE ELBOW TURNED UP
PIPING TEE DOWN
PIPING TEE UP
PIPE RISER
45° ELBOW DOWN
PIPING TO BE REMOVED
CAPPED PIPING
CONCENTRIC REDUCER
ECCENTRIC REDUCER
DIRECTION OF FLOW
PIPE PITCHES DOWN
PIPE GUIDE
EXPANSION JOINT
PIPE ANCHOR
UNION
FLANGED CONNECTION
BACKFLOW PREVENTER
FLEXIBLE CONNECTION
SHUT-OFF / ISOLATION VALVE REFER TO SPECIFICATIONS
GATE VALVE
GATE VALVE ~ OUTSIDE SCREW & YOKE (OS&Y)

GLOBE VALVE
LOCKABLE BALL VALVE
PLUG VALVE
2-WAY CONTROL VALVE
3-WAY CONTROL VALVE
LOCK & SHIELD VALVE
CHECK VALVE
BALANCING VALVE - CIRCUIT SETTER
AIR VENT ~ REFER TO SPECIFICATIONS
STRAINER w/ BLOWDOWN VALVE AND CAP
EXPANSION VALVE - AUTOMATIC
RELIEF / SAFETY VALVE
PRESSURE GAUGE w/ COCK
SIGHT GLASS
PRESSURE REDUCING VALVE
FLOW SWITCH
SELF-CONTAINED TEMPERATURE CONTROL VALVE w/ REMOTE SENSOR

STEAM TRAP - FLOAT & THERMOSTATIC INDICATED T.T.= THERMOSTATIC TRAP, B.T.= BUCKET TRAP
PUMP ~ POINT OF TRIANGLE INDICATES DIRECTION OF FLOW
GAS SHUT-OFF VALVE
HOSE END DRAIN VALVE w/ CAP
TEMPERATURE / PRESSURE TAP - PETE'S PLUG
THERMOMETER w/ COCK
SOLENOID VALVE
ORIFICE FLOWMETER
DIFFERENTIAL PRESSURE TRANSMITTER
HUMIDIFIER - DUCT / AHU MOUNTED
FINNED TUBE BASEBOARD
HOSE BIBB / WALL HYDRANT
FLOOR CLEANOUT
FUSIBLE LINK VALVE
WALL CLEANOUT
AQUASTAT

EXPANSION LOOP
EXPANSION LOOP (BRAIDED/MANUFACTURED)
FLOOR DRAIN
SHOCK ABSORBER - WATER HAMMER ARRESTER
FIRE DEPARTMENT - WALL MOUNTED CONNECTION
FIRE DEPARTMENT - FREESTANDING CONNECTION
FIRE DEPARTMENT - WATER GONG
DUCTWORK ~ FIRST DIMENSION IS SIDE SHOWN IN INCHES S= SUPPLY, R= RETURN, E= EXHAUST AIR, OA= OUTSIDE AIR F.O. = FLAT OVAL
ACCOUSTICAL LINING (DUCT DIMENSION FOR NET FREE AREA)
DUCTWORK TO BE REMOVED
SINGLE LINE DUCTWORK TO BE REMOVED
DUCT TRANSITION
SQUARE TO ROUND DUCT TRANSITION
FLEX DUCT ~ DOUBLE LINE
FLEX DUCT ~ SINGLE LINE

CHANGE IN ELEVATION - UP, DOWN, RISE OR DROP
SUPPLY DUCT TURNED UP / DN
RETURN DUCT TURNED UP / DN
EXHAUST DUCT TURNED UP / DN
ROUND DUCT TURNED UP / DN
MITERED DUCT ELBOW w/ TURNING VANES
RADIUS DUCT ELBOW
DUCT / PIPE CAP- SINGLE / DOUBLE LINE
VOLUME DAMPER
FIRE DAMPER
SMOKE DAMPER
FIRE AND SMOKE DAMPER
BACKDRAFT DAMPER

MOTORIZED DAMPER
FLEXIBLE CONNECTION
TEMPERATURE SENSOR OR THERMOSTAT (AS SPECIFIED)
HUMIDISTAT OR HUMIDITY SENSOR (AS SPECIFIED)
CARBON DIOXIDE SENSOR
CARBON MONOXIDE SENSOR
ACCESS PANEL
DUCT SMOKE DETECTOR
ROOFTOP EXHAUST FAN
ROOFTOP SUPPLY FAN
CEILING DIFFUSER ~ 4-WAY BLOW
CEILING DIFFUSER ~ 3-WAY BLOW
CEILING DIFFUSER ~ 2-WAY BLOW
CEILING DIFFUSER ~ CORNER BLOW
CEILING RETURN GRILLE
CEILING EXHAUST GRILLE
POINT OF CONNECTION - EXISTING TO NEW
DIRECTION OF AIR FLOW

REGISTER, GRILLE & DIFFUSER TAG
DIFFUSER, REGISTER OR GRILLE No.
QUANTITY
CFM AIR FLOW

FINTUBE TAG
FINTUBE No.
LENGTH
GPM

VAV TAG
VAV No.
MINIMUM CFM
MAXIMUM CFM
GPM

EQUIPMENT TAG
TYPE DESIGNATOR
NUMBER

EQUIPMENT TAG (ON FLOOR/ROOF ABOVE)
TYPE DESIGNATOR
NUMBER

DETAIL REFERENCE SYMBOL
DETAIL No.
SHEET DETAIL LOCATED ON

SECTION REFERENCE SYMBOL
SECTION No.
SHEET SECTION LOCATED ON

E1 SYMBOLS LEGEND

NONE

A1 PIPING LINETYPE LEGEND

NONE

AW	ACID WASTE
ATV	AIR RELIEF
BBD	BOILER BLOWDOWN
C	CONDENSATE (HVAC DRAIN PAN)
CA	COMPRESSED AIR
CHWR	CHILLED WATER RETURN
CHWS	CHILLED WATER SUPPLY
CTR	COOLING TOWER RETURN
CTS	COOLING TOWER SUPPLY
CWR	CONDENSER WATER RETURN
CWS	CONDENSER WATER SUPPLY
	DOMESTIC COLD WATER
	DOMESTIC HOT WATER
	DOMESTIC HOT WATER RECIRC.
D	DRAIN
FM	PUMP FORCE MAIN
FOF	FUEL OIL FILL
FOR	FUEL OIL RETURN
FOS	FUEL OIL SUPPLY
FOV	FUEL OIL TANK VENT
FW	FEEDWATER
GR	GLYCOL RETURN
GS	GLYCOL SUPPLY
GW	GREASE WASTE
GWR	GEOTHERMAL WATER RETURN
GWS	GEOTHERMAL WATER SUPPLY
H	HUMIDIFICATION LINE
H2	HYDROGEN GAS
HCR	HEAT/COOL RETURN
HCS	HEAT/COOL SUPPLY
HPWR	HEAT PUMP WATER RETURN
HPWS	HEAT PUMP WATER SUPPLY
HPC	HIGH PRESSURE CONDENSATE
HPS	HIGH PRESSURE STEAM
HTWR	HIGH-TEMP HOT WATER RETURN
HWR	HOT WATER RETURN
HWS	HOT WATER SUPPLY
IND	INDUSTRIAL WASTE
IW	INDIRECT WASTE
LN	LIQUID NITROGEN
LOX	LIQUID OXYGEN
LP	LIQUID PETROLEUM GAS
LPR	LOW PRESSURE CONDENSATE
LPS	LOW PRESSURE STEAM
MA	MEDICAL AIR
MPR	MEDIUM PRESSURE CONDENSATE
MPS	MEDIUM PRESSURE STEAM
MUW	MAKE-UP WATER
N2	NITROGEN
NG	NATURAL GAS
NO	NITROUS OXIDE
NPW	NON-POTABLE WATER
OX	OXYGEN
PC	PUMPED CONDENSATE
PCWR	PROCESS COLD WATER RETURN
PCWS	PROCESS COLD WATER SUPPLY
RD	REFRIGERANT DISCHARGE
RL	REFRIGERANT LIQUID
RS	REFRIGERANT SUCTION
RO	REVERSE OSMOSIS WATER
RW	RAIN WATER - ABOVE FLOOR
RW	RAIN WATER - BELOW GRADE
RWO	RAIN WATER OVERFLOW - ABOVE FLOOR
RWO	RAIN WATER OVERFLOW - BELOW GRADE
SP	SPRINKLER MAIN PIPING
SWR	SOLAR WATER RETURN
SWS	SOLAR WATER SUPPLY
TP	TRAP PRIMER - ABOVE FLOOR
TP	TRAP PRIMER - BELOW GRADE
TWR	TEMPERED WATER RETURN
TWS	TEMPERED WATER SUPPLY
V	SANITARY SOIL VENT - ABOVE FLOOR
V	SANITARY SOIL VENT - BELOW GRADE
VAC	VACUUM (AIR)
VC	VACUUM CLEANING (HOUSE)
VPD	VACUUM PUMP DISCHARGE
W	SANITARY SOIL WASTE - ABOVE FLOOR
W	SANITARY SOIL WASTE - BELOW GRADE
WV	SANITARY WET VENT - ABOVE FLOOR
WV	SANITARY WET VENT - BELOW GRADE

A5 ABBREVIATIONS

NONE

AAV	AUTOMATIC AIR VENT
AC	ABOVE CEILING
ACC	AIR COOLED CONDENSER
ACU	AIR CONDITIONING UNIT
ADA	AMERICANS WITH DISABILITIES ACT
AD	ACCESS DOOR
AE	ACID EXHAUST
AW	ACID WASTE
AFF; A.F.F.	ABOVE FINISHED FLOOR
AHU	AIR HANDLING UNIT
AP	ACCESS PANEL
APPROX.	APPROXIMATE; APPROXIMATELY
APMR	AS PER MFR'S RECOMMENDATIONS
ATC	AUTOMATIC TEMPERATURE CONTROL
AV	AIR VENT
BC	BALANCING COCK
BDD	BACKDRAFT DAMPER
BG	BLAST GATE
BF	BARRIER FREE
BFP	BACKFLOW PREVENTER
BHP	BRAKE HORSEPOWER
BLDG	BUILDING
BOD	BOTTOM OF DUCT
B.T.U.; BTU	BRITISH THERMAL UNIT
CONV.	CONVECTOR
CCW	COUNTER CLOCKWISE
CFF	CAPPED FOR FUTURE
CFM	CUBIC FEET PER MINUTE
CLG	CEILING
CO	CLEANOUT
CM	CONSTRUCTION MANAGER
CNTR	COUNTER; COUNTER TOP
CONN	CONNECT; CONNECTION
CONT.	CONTINUE; CONTINUATION
COORD.	COORDINATE
CORR	CORRIDOR
CR	CHEMICAL RESISTING
CT	COOLING TOWER
CTE	CONNECT TO EXISTING
CTR	CENTER
CTRLN	CENTERLINE
CU	COPPER; CONDENSING UNIT
CUH	CABINET UNIT HEATER
C.V.	CONTROL VALVE
CW	COLD WATER; CLOCKWISE
DB	DRY BULB TEMPERATURE
DC	DOUBLE CONTAINED
DDC	DIRECT DIGITAL CONTROL
DET	DETAIL
DIA	DIAMETER
DIC	DOWN IN CHASE
DIW	DOWN IN WALL
DN	DOWN
DS	DOWNSPOUT
DT	DROP AND TRANSITION
DV	DRAIN VALVE
DWG	DRAWING
E	EXHAUST AIR
EF	EXHAUST FAN
EG	EXHAUST GRILLE
ELEV	ELEVATION
ELONG	ELONGATE
ENC	ENCLOSURE
ER	EXHAUST REGISTER
ERU	ENERGY RECOVERY UNIT
ESP	EXTERNAL STATIC PRESSURE
ET	EXPANSION TANK
(E)	EXISTING
F&T	FLOAT AND THERMOSTATIC
FBO	FURNISHED BY OTHERS
FBP	FACE AND BYPASS
FC	FLEXIBLE CONNECTION
FCO	FLOOR CLEANOUT
FD-#	FLOOR DRAIN TAG
FD	FIRE DAMPER
FDC	FIRE DEPT. CONNECTION
FIN	FINISH
FL; FLR	FLOOR
FP	FROST/FREEZE PROOF
FTG	FOOTING
FTR	FINNED TUBE RADIATION
FS	FLOW SWITCH
FM	FORCE MAIN
GC	GENERAL CONTRACTOR
GPM	GALLONS PER MINUTE
GRV	GRAVITY ROOF VENTILATOR
H	HUMIDIFIER
HB	HOSE BIBB
HC; HDC	HANDICAP ACCESS
HGT; HT	HEIGHT
HP	HEAT PUMP
HRU	HEAT RECOVERY UNIT
HTR	HEATER
H&V	HEATING AND VENTILATION
HVAC	HEATING, VENTILATING AND AIR COND.
HW	HOT WATER
HWR	HOT WATER RETURN
HWS	HOT WATER SUPPLY
HX	HEAT EXCHANGER
ID	INSIDE DIAMETER
IN WG	INCHES WATER GAUGE
INCL.	INCLUDING
INV. EL.	INVERT ELEVATION
IPS	IRON PIPE SIZE
KE-#	KITCHEN EQUIPMENT NUMBER
LD	LINEAR DIFFUSER
LE-#	SCIENCE LAB EQUIPMENT NUMBER
LP	LIQUID PETROLEUM GAS
LPR	LOW PRESSURE STEAM RETURN
LPS	LOW PRESSURE STEAM SUPPLY
MAX	MAXIMUM
MBH	1000 BTUH/hr.
MFR	MANUFACTURER
MIN	MINIMUM
MOD	MOTOR OPERATED DAMPER
MPG	MEDIUM PRESSURE GAS
MPV	MULTI-PURPOSE VALVE
MTD	MOUNTED
MTG	MOUNTING
MUA	MAKE UP AIR
N.C.	NORMALLY CLOSED
N.O.	NORMALLY OPEN
NG	NATURAL GAS
NIC	NOT IN CONTRACT
NPT	NATIONAL PIPE THREAD
NTS	NOT TO SCALE
OA	OUTSIDE AIR
OBD	OPPOSED BLADE DAMPER
OD	OUTSIDE DIAMETER
OED	OPEN ENDED DUCT
P-#	PLUMBING FIXTURE TAG
PD	PUMPED DISCHARGE
PP	PROCESS PIPING
PRS	PRESSURE REDUCING STATION
PRV	PRESSURE REDUCING VALVE
R	RETURN AIR
RD	ROOF DRAIN
REC	RECOMMENDATION
REG	REGULAR
RF	RETURN FAN
RG	RETURN GRILLE
RHC	REHEAT COIL
RM	ROOM
RPZ	REDUCED PRESSURE BFP
RR	RETURN REGISTER
RV	RELIEF VALVE
RW	RAIN WATER
S	SUPPLY AIR
SA-" "	SHOCK ABSORBER OF PDI SIZE (" ") AS INDICATED
SCV	SELF-CONTAINED VALVE
SD	SMOKE DAMPER
SF	SUPPLY FAN
SG	SUPPLY GRILLE
SGL	SINGLE
SHT	SHEET
SPLR	SPRINKLER
SQ. FT; SF	SQUARE FEET
SR	SUPPLY REGISTER
S/O	SHUT-OFF
S.S.	STAINLESS STEEL
TD	TRENCH DRAIN
TG	TRANSFER GRILLE
TOD	TOP OF DUCT
TP	TRAP PRIMER
TSP	TOTAL STATIC PRESSURE
TTS	TIGHT TO STEEL
TV	TURNING VANE
TW	TEMPERED WATER
TYP	TYPICAL
UH	UNIT HEATER
UIC	UP IN CHASE
UIW	UP IN WALL
UV	UNIT VENTILATOR
V	VENT
VAC	VACUUM
VB	VACUUM BREAKER
VCFF	VALVE & CAP FOR FUTURE
VD	VOLUME DAMPER - MANUAL
VLV	VALVE
VS	VENT STACK
VTR	VENT TO ROOF
W	WASTE
W/	WITH
WB	WET BULB TEMPERATURE, °F
WCO	WALL CLEANOUT
WH	WATER HEATER
WHYD	WALL HYDRANT
Ø	DIAMETER
@	AT
&	AND
%	PERCENT

NOTE

ALL GENERAL NOTES, SYMBOL LEGENDS AND DETAILS ARE TO BE CONSIDERED AS APPLICABLE TO ALL PLUMBING AND HVAC DRAWINGS FOR THIS PROJECT. SYMBOLS AND ABBREVIATIONS SHOWN ON THIS SHEET ARE FOR REFERENCE ONLY AND DO NOT INDICATE THEIR INCORPORATION INTO THE DESIGN.

Allied Engineering
Structural Mechanical Electrical Plumbing
160 Veranda Street
Portland, Maine 04103
P: 207.221.2260
F: 207.221.2266
Web:www.allied-eng.com
Allied Project No: 12069 | Cad File:

AECOM
1 FEDERAL STREET, 8TH FLOOR
BOSTON, MA 02110
617.723.1700
www.aecom.com

STATE OF MAINE
DEPARTMENT OF TRANSPORTATION

DATE

FED PIN NO: NA
WIN NO: 017163.02 & 017163.03

STATE OF MAINE ANTHONY S. DAVIS No. 8834 LICENSED PROFESSIONAL ENGINEER

SIGNATURE

P.E. NUMBER 8834

DATE January 17, 2022

PROJECT INFORMATION

PROGRAM	-
PROJECT MANAGER	-
DESIGNER	AECOM
CONSULTANT	ALLIED ENGINEERING
PROJECT RESIDENT	-
CONTRACTOR	-
PROJECT COMPLETION DATE	-

MAINE DEPARTMENT OF TRANSPORTATION
ACADIA GATEWAY FACILITY
INTERMODAL AND WELCOME CENTER

PLUMBING AND HVAC NOTES, LEGEND AND ABBREVIATIONS

SHEET NUMBER
PL000

Filename: Date: Division: Username:

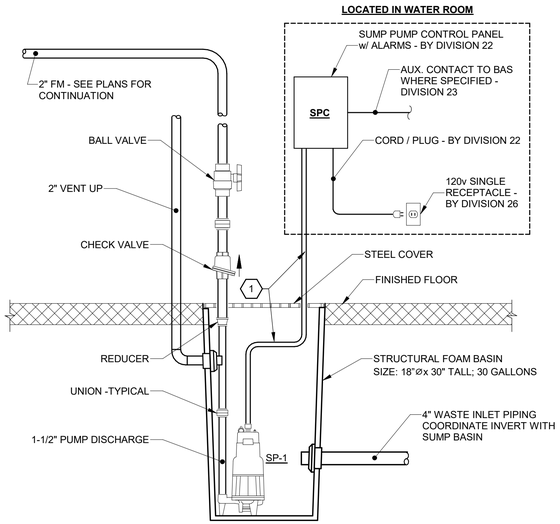

KEYED NOTE:

1. WIRING AND CONDUIT BY DIVISION 26

C1	SUMP PUMP AND SUMP PIT PIPING DETAIL
NONE	

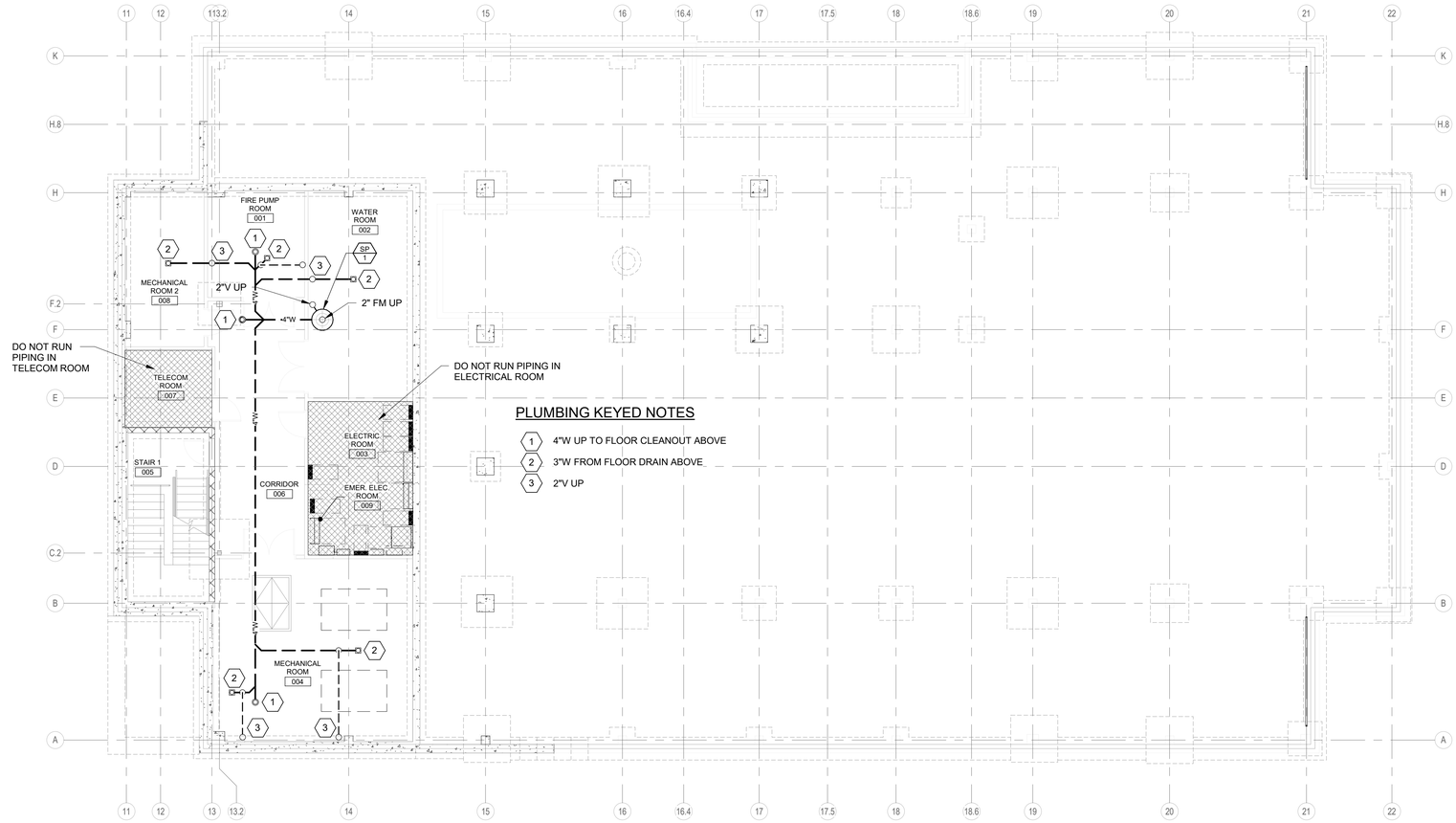

PLUMBING KEYED NOTES

1. 4"W UP TO FLOOR CLEANOUT ABOVE
2. 3"W FROM FLOOR DRAIN ABOVE
3. 2"V UP

D4	PLUMBING UNDER SLAB PIPING PLAN - BASEMENT LEVEL
1/8" = 1'-0"	

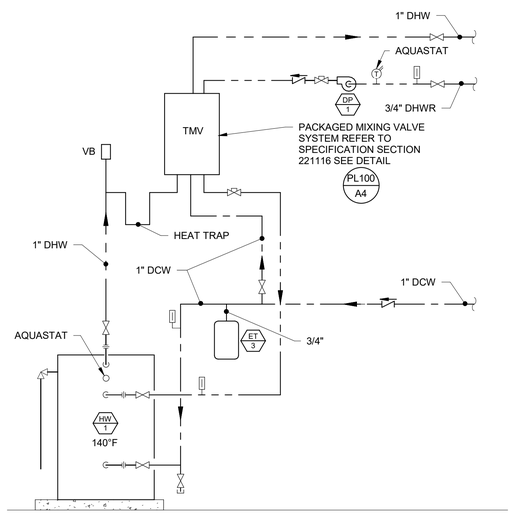

A1	DETAIL - DHW PIPING SCHEMATIC
NONE	

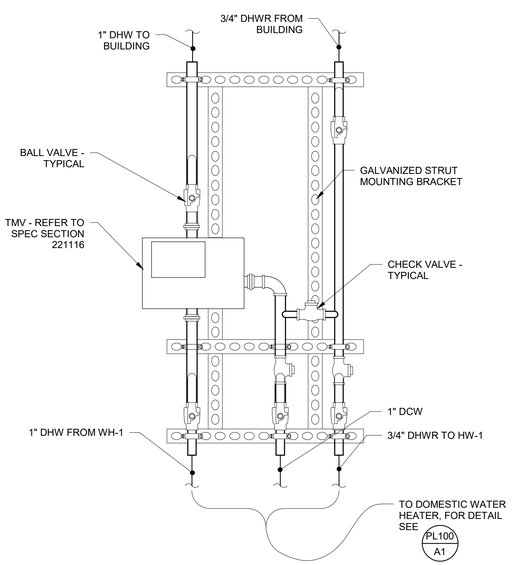

A4	TMV - PACAKGED MIXING STATION
NONE	

PROJECT KEY PLAN

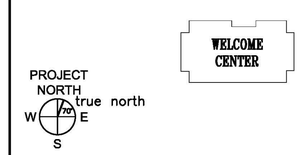

Allied Engineering
Structural Mechanical Electrical Plumbing
160 Veranda Street
Portland, Maine 04103
P: 207.221.2260
F: 207.221.2266
Web: www.allied-eng.com

AECOM
1 FEDERAL STREET, 8TH FLOOR
BOSTON, MA 02110
617.723.1700
www.aecom.com

Allied Project No: 12069 | Cad File:

STATE OF MAINE
DEPARTMENT OF TRANSPORTATION

DATE

FED PIN NO: NA

WIN NO: 017163.02 & 017163.03

STATE OF MAINE ANTHONY S. DAVIS No. 8834 LICENSED PROFESSIONAL ENGINEER

SIGNATURE

P.E. NUMBER 8834

DATE January 17, 2022

PROJECT INFORMATION

PROGRAM	-
PROJECT MANAGER	-
DESIGNER	AECOM
CONSULTANT	ALLIED ENGINEERING
PROJECT RESIDENT	-
CONTRACTOR	-
PROJECT COMPLETION DATE	-

MAINE DEPARTMENT OF TRANSPORTATION
ACADIA GATEWAY FACILITY
INTERMODAL AND WELCOME CENTER

PLUMBING PLAN – BASEMENT BELOW SLAB

SHEET NUMBER

PL100

Filename: Date: Division: Username:

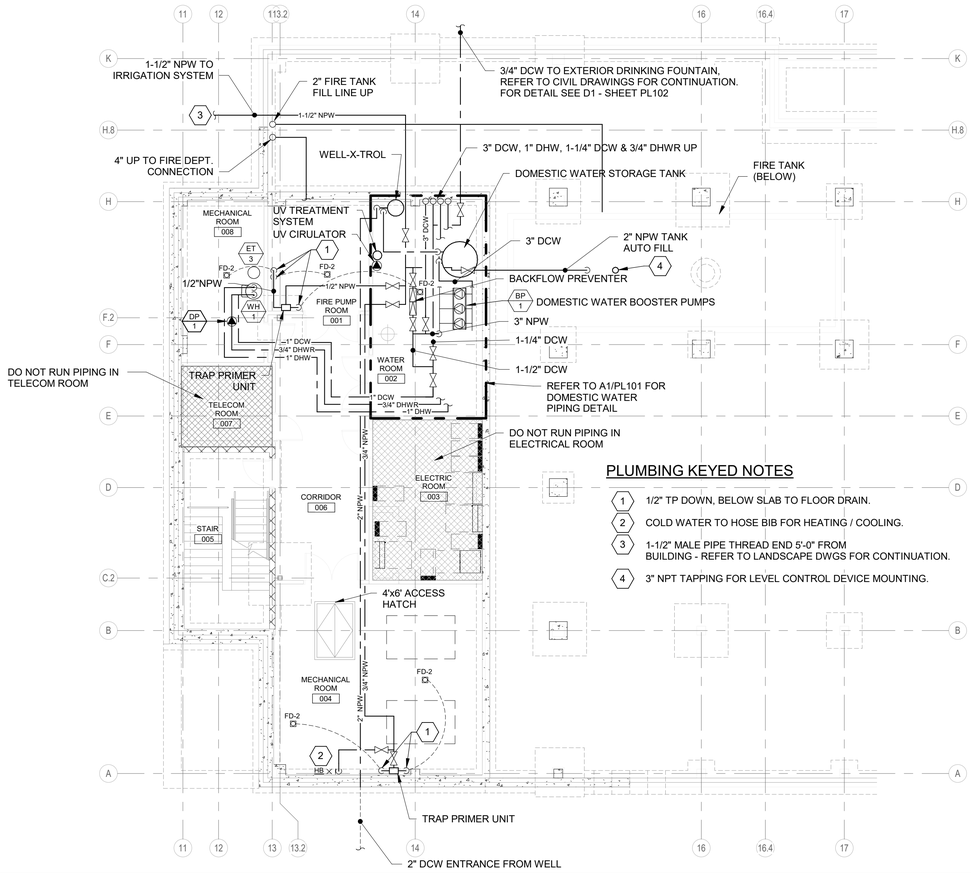

PLUMBING KEYED NOTES

1. 1/2" TP DOWN, BELOW SLAB TO FLOOR DRAIN.
2. COLD WATER TO HOSE BIB FOR HEATING / COOLING.
3. 1-1/2" MALE PIPE THREAD END 5'-0" FROM BUILDING - REFER TO LANDSCAPE DWGS FOR CONTINUATION.
4. 3" NPT TAPPING FOR LEVEL CONTROL DEVICE MOUNTING.

D1 | PLUMBING DOMESTIC PIPING ENLARGED PLAN - FIRST FLOOR

1/8" = 1'-0"

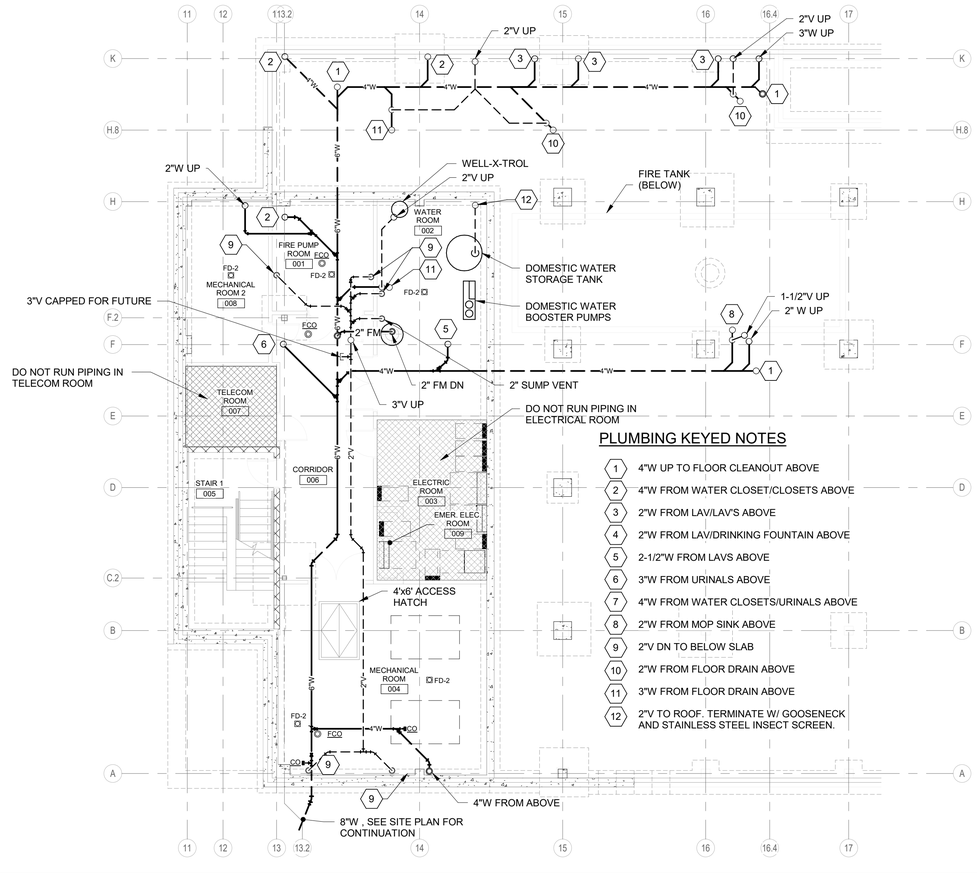

PLUMBING KEYED NOTES

1. 4"W UP TO FLOOR CLEANOUT ABOVE
2. 4"W FROM WATER CLOSET/CLOSETS ABOVE
3. 2"W FROM LAV/LAV'S ABOVE
4. 2"W FROM LAV/DRINKING FOUNTAIN ABOVE
5. 2-1/2"W FROM LAVS ABOVE
6. 3"W FROM URINALS ABOVE
7. 4"W FROM WATER CLOSETS/URINALS ABOVE
8. 2"W FROM MOP SINK ABOVE
9. 2"V DN TO BELOW SLAB
10. 2"W FROM FLOOR DRAIN ABOVE
11. 3"W FROM FLOOR DRAIN ABOVE
12. 2"V TO ROOF. TERMINATE W/ GOOSENECK AND STAINLESS STEEL INSECT SCREEN.

D6 | PLMBING SANITARY PIPING ENLARGED PLAN - FIRST FLOOR

1/8" = 1'-0"

GENERAL NOTES:

1. COORDINATE TANK LOCATION TO FACILITATE SERVICE CLEARANCE FOR ALL EQUIPMENT.
2. WATER DELIVERY SYSTEM ASSUMES A MINIMUM WELL YIELD OF 25 GPM WITH NO SOFTENING REQUIREMENTS. ONCE ACTUAL WATER QUALITY & YIELD ARE KNOWN, THE CONTRACTOR SHALL IMMEDIATELY NOTIFY THE ARCHITECT IF ADDITIONAL COMPONENTS ARE NECESSARY.
3. TREATMENT SYSTEM IS SHOWN DIAGRAMMATICALLY THE CONTRACTOR SHALL BE RESPONSIBLE FOR TESTING THE SOURCE WATER QUALITY PRIOR TO FINALIZING THE TREATMENT SYSTEM DESIGN AND SHALL NOTIFY THE OWNER IMMEDIATELY IF ADDITIONAL EQUIPMENT IS NECESSARY BASED UPON TEST RESULTS.
4. THE CONTRACTOR SHALL BE RESPONSIBLE FOR OBTAINING APPROVAL FROM THE STATE OF MAINE FOR THE TREATMENT SYSTEM DESIGN AND INSTALLATION, BASED UPON ACTUAL SOURCE WATER TEST RESULTS.
5. THE WELL IS PRE-EXISTING IT IS ASSURED THAT THE WELL HAS BEEN APPROVED PREVIOUSLY BY THE STATE OF MAINE FOR USE IN SERVING THE PROPOSED FACILITY.

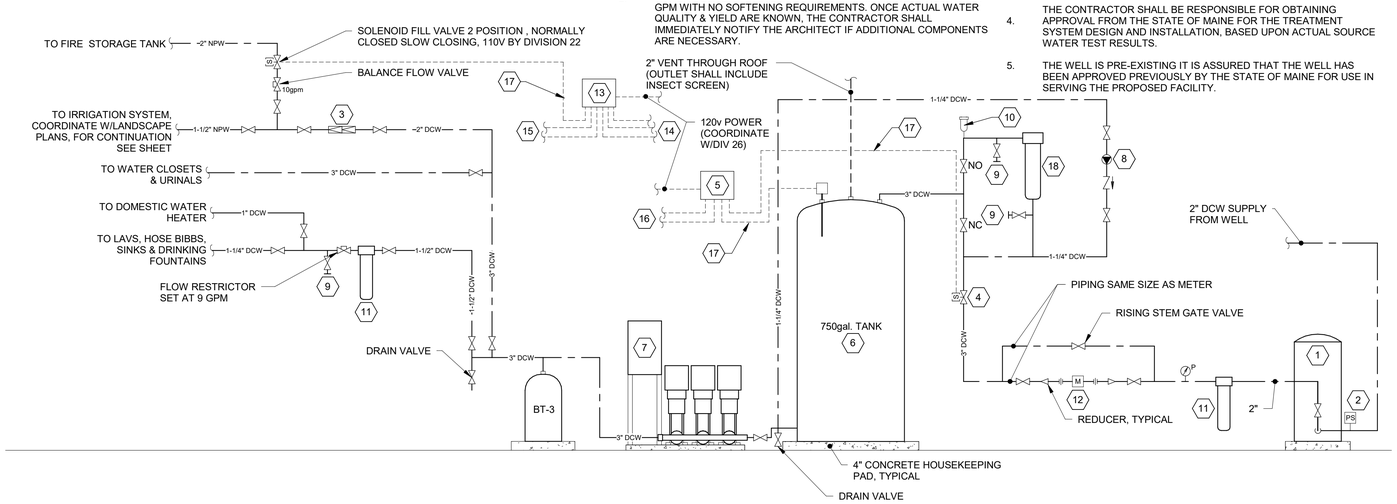

KEYED NOTES:

1. WELL-X-TROL MODEL No. WX453C CAPACITY, 264 gal. MINIMUM ACCEPTANCE VOLUME
2. PRESSURE SWITCH, ON AT 20 psi, OFF AT 30 psi.
3. 2" RPZ BACKFLOW PREVENTER, EQUAL TO WATTS 909QT
4. SOLENOID VALVE SHALL BE PIPE LINE SIZE, BRASS, EQUAL TO ASCO 8210 SERIES, NORMALLY CLOSED, 24v OR 120v ACTUATOR IS ACCEPTABLE. VALVE SHALL BE CONTROLLED VIA COMPACT RELAY CONTROLLER. VALVE SHALL BE SLOW CLOSING SOLENOID TO AVOID WATER SHOCK.
5. WATER LEVEL CONTROLLER EQUAL TO WATERLINE CONTROLS MODEL WLC-5000. BY DIV. 22.
6. 750 gal. VERTICAL MOLDED POLYETHYLENE RESIN TANK EQUAL TO CRMI MODEL 750VT. TANK SHALL BE LISTED AND APPROVED FOR POTABLE USE. INSULATE TANK PER SPECIFICATION. COORDINATE WITH TANK MANUFACTURER FOR REQUIRED TAPPING.
7. SKID-MOUNTED BOOSTER VARIABLE SPEED. REFER TO DOMESTIC WATER BOOSTER PUMP SCHEDULE AND SPECIFICATIONS.
8. UV RECIRCULATION PUMP EQUAL TO GRUNDFOS UPS 15-555FC, 115V, 87W.
9. SAMPLE PORT (1/4" JG BALL VALVE).
10. BRAUKMANN BOTTLE VENT 1/8" MALE THREADS.
11. 2" WHOLE BUILDING FILTER, BIG BLUE No. 20. INCLUDE (6) PENTEK No. ECP20-20BB PLEATED CELLULOSE 20 MICRON FILTER CARTRIDGES.
12. WATER METER SIZED FOR 0.5 gpm TO 25 gpm, EQUAL TO OMNI C2 BY SESNUS METERING SYSTEMS.
13. SPRINKLER TANK LEVEL CONTROLLER EQUAL TO WATER LINE CONTROLS MODEL WLC FPT-50. BY DIV. 22.
14. MAKE-UP VALVE CONTROL, HI ALARM & LOW ALARM FROM TANK MNTD CONTROLS BY DIV. 22 .
15. HI/LO ALARM TO FACP (BY DIV. 28).
16. HI/LO ALARM TO BAS BY DIV. 23
17. CONTROL WIRING FROM CONTROLLER TO MAKE-UP VALVE AND FROM TANK CONTROLS TO CONTROLLER BY DIV. 22.
18. UV TREATMENT SYSTEM EQUAL TO VIGUA D4 UV.

A1 | DETAIL - DOMESTIC WATER ENTRANCE

NONE

PROJECT KEY PLAN

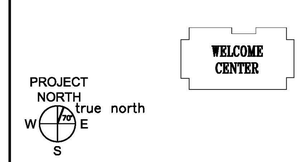

Allied Engineering
Structural Mechanical Electrical Plumbing
160 Veranda Street
Portland, Maine 04103
P: 207.221.2260
F: 207.221.2266
Web:www.allied-eng.com

AECOM
1 FEDERAL STREET, 8TH FLOOR
BOSTON, MA 02110
617.723.1700
www.aecom.com

Allied Project No: 12069 | Cad File:

STATE OF MAINE
DEPARTMENT OF TRANSPORTATION

DATE

FED PIN NO: NA

WIN NO: 017163.02 & 017163.03

STATE OF MAINE ANTHONY S. DAVIS No. 8834 LICENSED PROFESSIONAL ENGINEER

SIGNATURE

P.E. NUMBER 8834

DATE January 17, 2022

PROJECT INFORMATION

PROGRAM	
PROJECT MANAGER	AECOM
DESIGNER	ALLIED ENGINEERING
CONSULTANT	
PROJECT RESIDENT	
CONTRACTOR	
PROJECT COMPLETION DATE	

MAINE DEPARTMENT OF TRANSPORTATION
ACADIA GATEWAY FACILITY
INTERMODAL AND WELCOME CENTER

PLUMBING PART PLANS - BASEMENT

SHEET NUMBER

PL101

Username:
Division:
Date:
Filename:

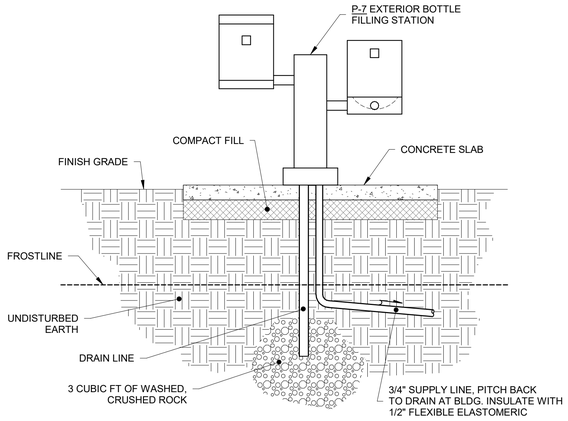

E1	DETAIL - EXTERIOR BOTTLE FILLING STATION PIPING
NONE	

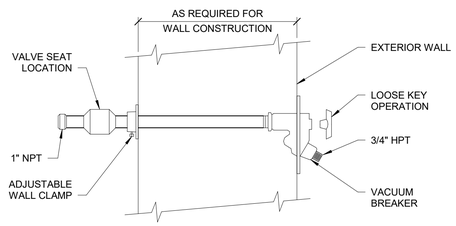

NOTE:
CONCEALED WALL BOX HYDRANT IS SIMILAR.

D1	DETAIL - EXTERIOR WALL HYDRANT
NONE	

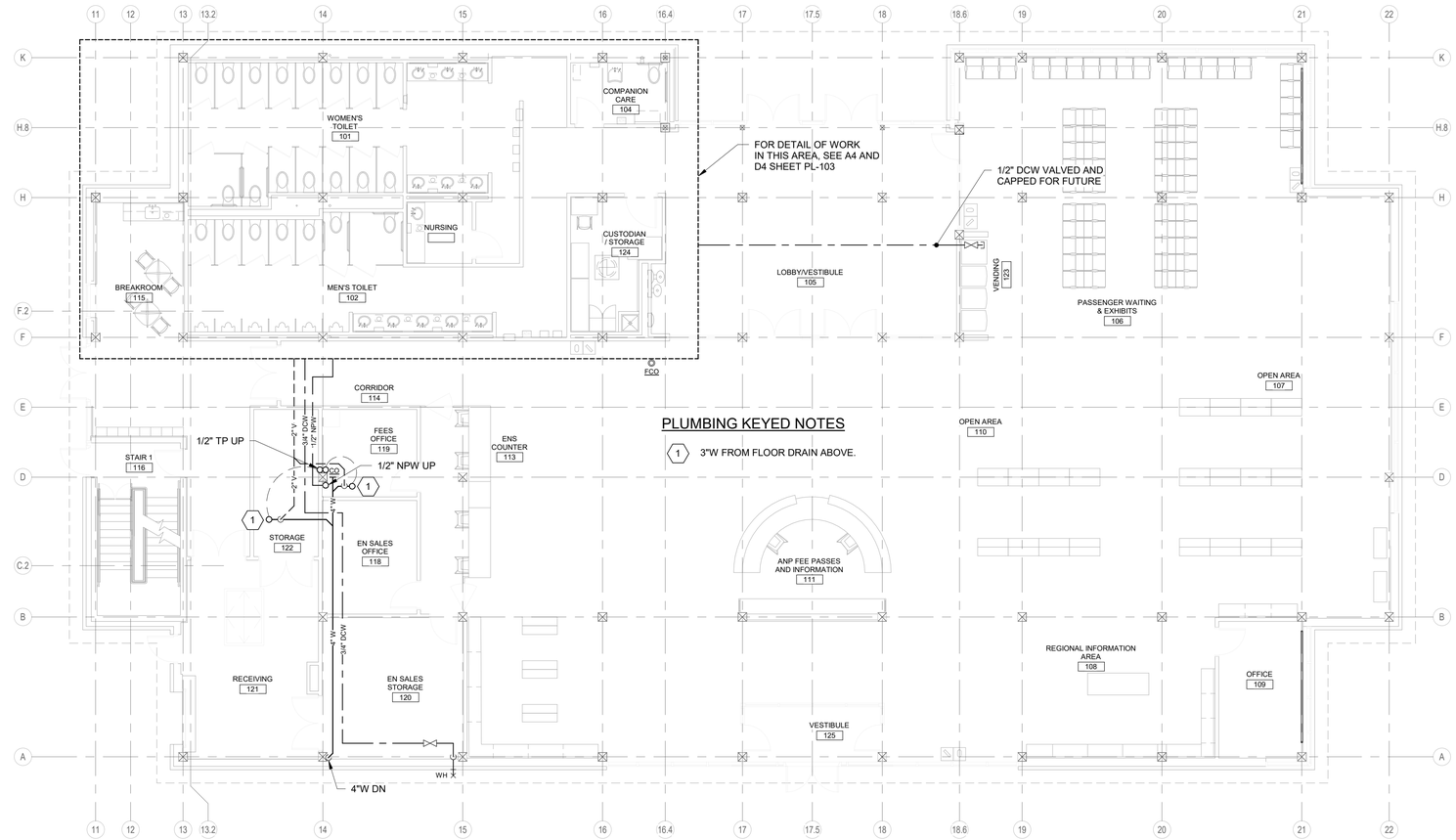

PLUMBING KEYED NOTES

1. 3"W FROM FLOOR DRAIN ABOVE.

D4	PLUMBING PLAN - FIRST FLOOR
1/8" = 1'-0"	

PROJECT KEY PLAN

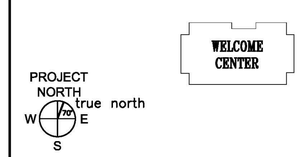

Allied Engineering
Structural Mechanical Electrical Plumbing
160 Veranda Street
Portland, Maine 04103
P: 207.221.2260
F: 207.221.2266
Web:www.allied-eng.com

AECOM
1 FEDERAL STREET, 8TH FLOOR
BOSTON, MA 02110
617.723.1700
www.aecom.com

Allied Project No: 12069 | Cad File:

STATE OF MAINE
DEPARTMENT OF TRANSPORTATION

DATE

FED PIN NO: NA

WIN NO: 017163.02 & 017163.03

STATE OF MAINE ANTHONY S. DAVIS No. 8834 LICENSED PROFESSIONAL ENGINEER

SIGNATURE

P.E. NUMBER 8834

DATE January 17, 2022

PROJECT INFORMATION

PROGRAM MANAGER	AECOM
PROJECT MANAGER	AECOM
DESIGNER	ALLIED ENGINEERING
CONSULTANT	-
PROJECT RESIDENT	-
CONTRACTOR	-
PROJECT COMPLETION DATE	-

MAINE DEPARTMENT OF TRANSPORTATION

ACADIA GATEWAY FACILITY

INTERMODAL AND WELCOME CENTER

PLUMBING PLAN – FIRST FLOOR

COPYRIGHT 2020 ALLIED ENGINEERING, INC.

SHEET NUMBER

PL102

Filename: Date: Division: Username:

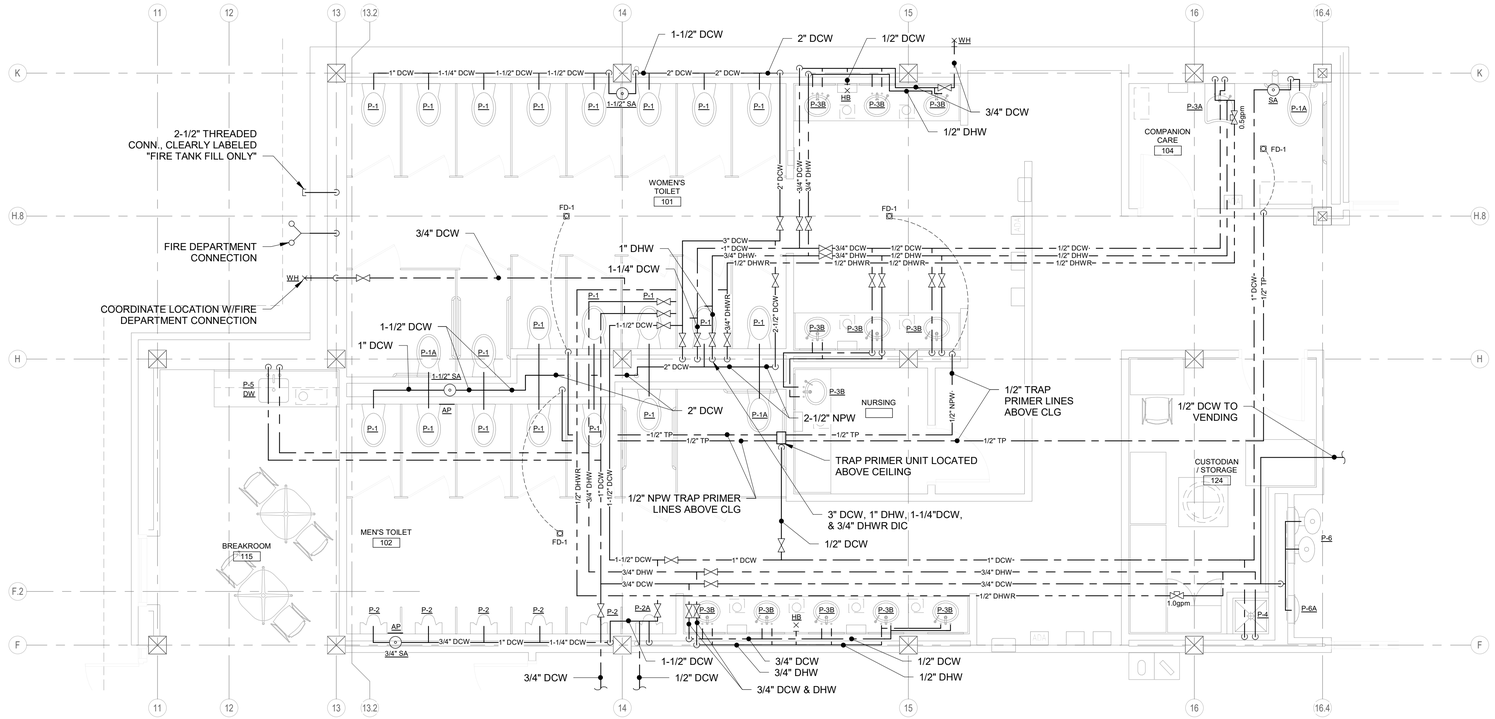

D1 | ENLARGED PLUMBING DOMESTIC PIPING PART PLAN - FIRST FLOOR

1/4" = 1'-0"

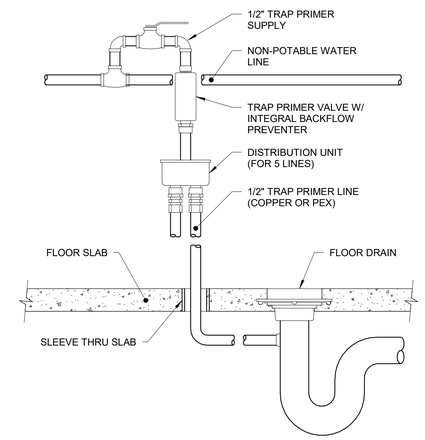

D8 | DETAIL - TRAP PRIMER PIPING

NONE

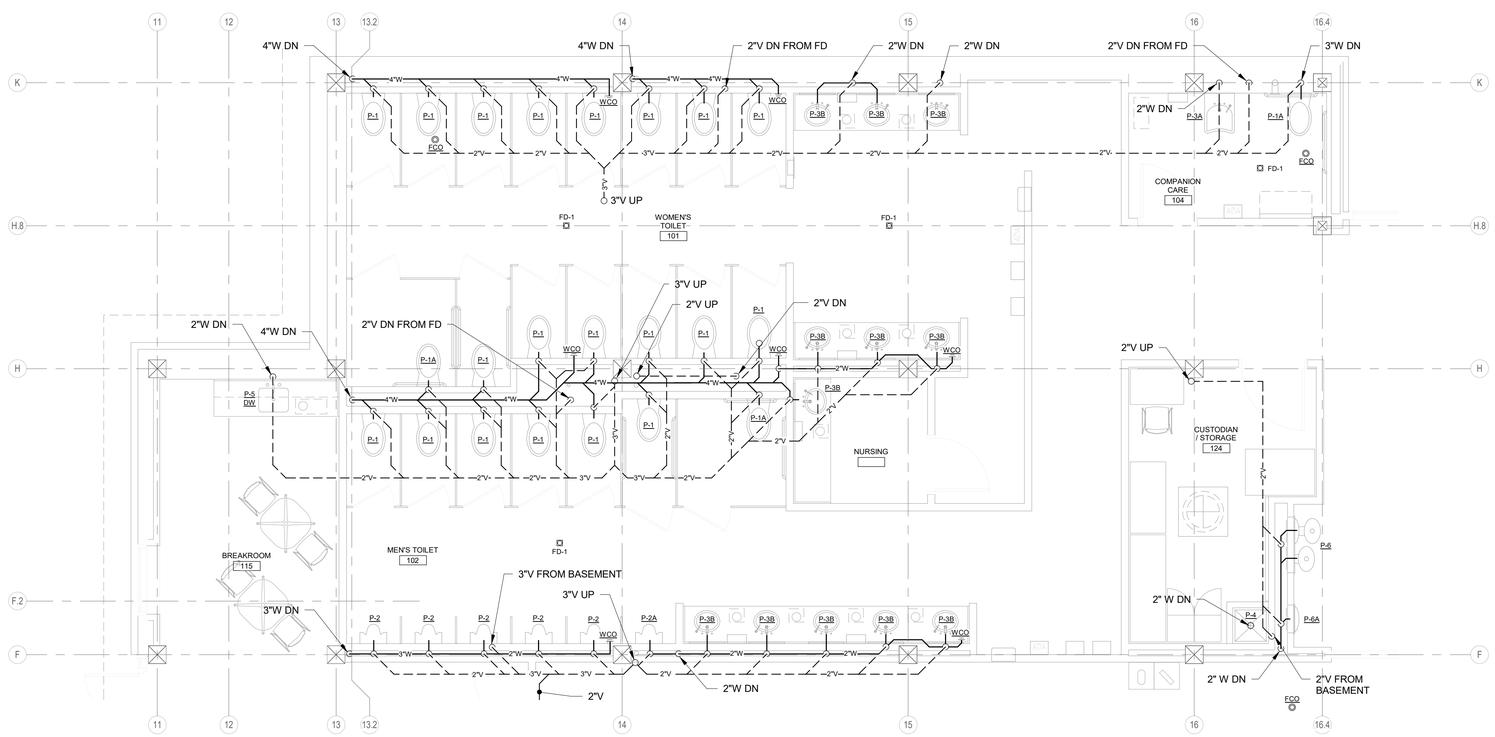

A1 | ENLARGED PLUMBING SANITARY PART PLA - FIRST FLOOR

1/4" = 1'-0"

Allied Engineering
Structural Mechanical Electrical Plumbing
160 Veranda Street
Portland, Maine 04103
P: 207.221.2260
F: 207.221.2266
Web: www.allied-eng.com

Allied Project No: 12069 | Cad File:

AECOM
1 FEDERAL STREET, 8TH FLOOR
BOSTON, MA 02110
617.723.1700
www.aecom.com

PROJECT KEY PLAN

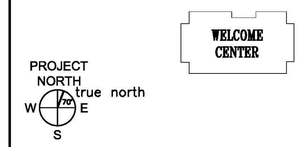

STATE OF MAINE
DEPARTMENT OF TRANSPORTATION

DATE

FED PIN NO: NA

WIN NO: 017163.02 & 017163.03

STATE OF MAINE
ANTHONY S. DAVIS
No. 8834
PROFESSIONAL ENGINEER

SIGNATURE

P.E. NUMBER 8834

DATE January 17, 2022

PROJECT INFORMATION

PROGRAM -
PROJECT MANAGER -
DESIGNER AECOM
CONSULTANT ALLIED ENGINEERING
PROJECT RESIDENT -
CONTRACTOR -
PROJECT COMPLETION DATE -

MAINE DEPARTMENT OF TRANSPORTATION
ACADIA GATEWAY FACILITY
INTERMODAL AND WELCOME CENTER

ENLARGED PLUMBING PART
PLANS – FIRST FLOOR

SHEET NUMBER
PL103

Filename: Division: Date: Username:

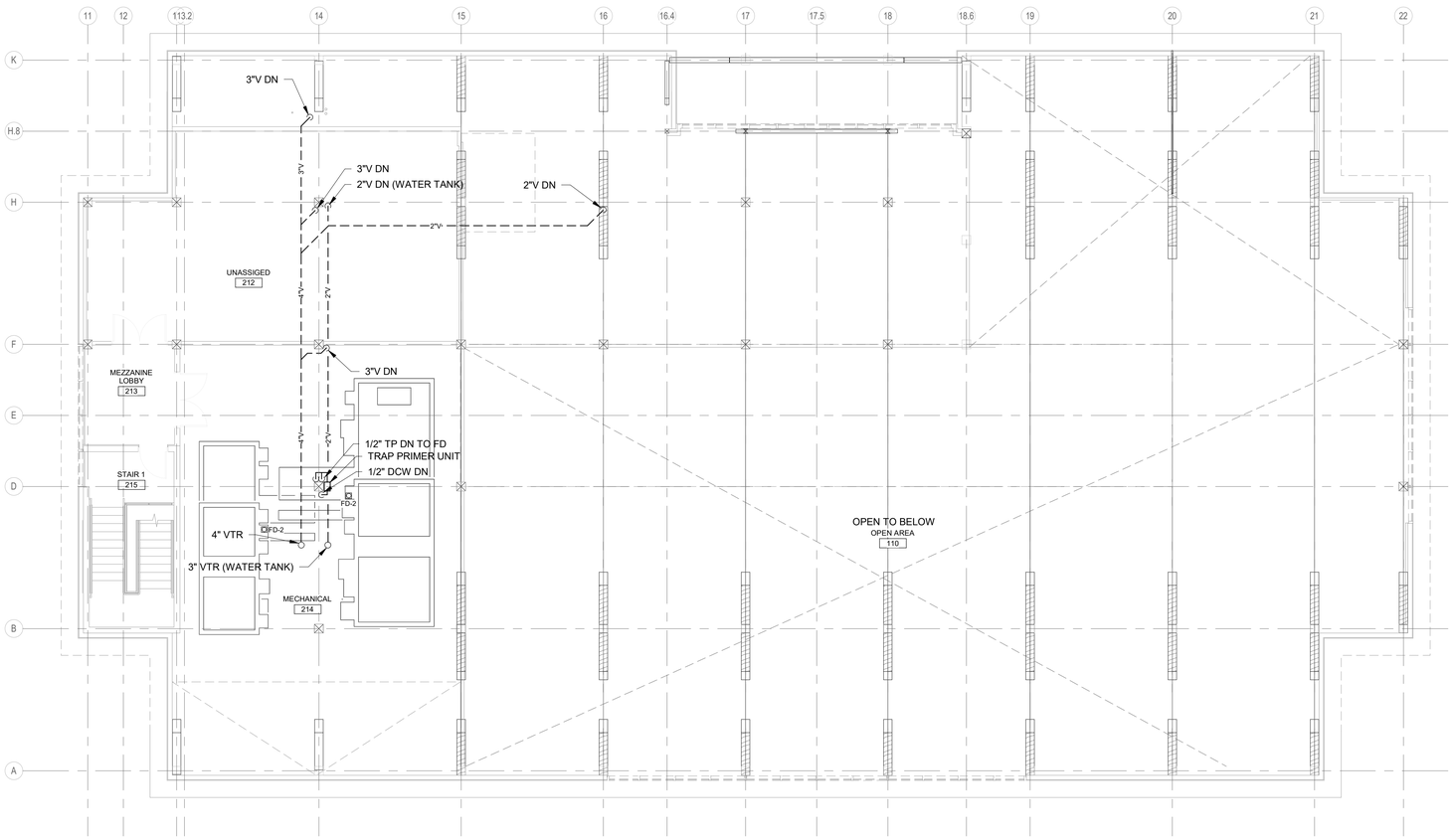

PROJECT KEY PLAN

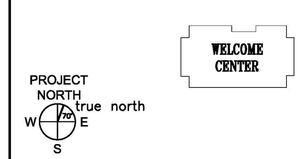

Allied Engineering
Structural Mechanical Electrical Plumbing
160 Veranda Street
Portland, Maine 04103
P: 207.221.2260
F: 207.221.2266
Web: www.allied-eng.com

AECOM
1 FEDERAL STREET, 8TH FLOOR
BOSTON, MA 02110
617.723.1700
www.aecom.com

Allied Project No: 12069 | Cad File:

A1	PLUMBING PLAN - MEZZANINE
1/8" = 1'-0"	

STATE OF MAINE
DEPARTMENT OF TRANSPORTATION

DATE

FED PIN NO: NA

WIN NO: 017163.02 & 017163.03

STATE OF MAINE
ANTHONY S. DAVIS
No. 8834
PROFESSIONAL ENGINEER

SIGNATURE

P.E. NUMBER 8834

DATE January 17, 2022

PROJECT INFORMATION

PROGRAM	-
PROJECT MANAGER	-
DESIGNER	AECOM
CONSULTANT	ALLIED ENGINEERING
PROJECT RESIDENT	-
CONTRACTOR	-
PROJECT COMPLETION DATE	-

MAINE DEPARTMENT OF TRANSPORTATION

ACADIA GATEWAY FACILITY

INTERMODAL AND WELCOME CENTER

PLUMBING PLAN – MEZZANINE

SHEET NUMBER

PL104

Filename: Date: Division: Username:

PACKAGE DOMESTIC WATER BOOSTER PUMP SCHEDULE

TAG	LOCATION	MFG.	MODEL	TYPE	CIRCULATING FLUID							PUMP SHUT OFF PRESSURE	OULET BUFFER TANK ACCEPTANCE VOLUME	ELECTRICAL MOTOR					
					FLUID	NO PUMPS	FLOW EA. PUMP	HEAD EA. PUMP	MIN NPSH REQ	TEMPERATURE	SP GR			NOMINAL POWER, EA.	PHASE	VOLT	MAX RPM	SPEED CONTROL	
							GPM	FT		°F		PSIG	GAL	HP					
BP-1	MECH ROOM	GRUNDFOS	MPC E 3CRE 15-3 (3 PUMPS PARALLEL)	MultiStage	DOMESTIC COLD WATER	3	73	140	4.59	50	1	85	60	7.5	3	460	3599	VARIABLE	

PLUMBING PUMP SCHEDULE

TAG	SERVES	MAKE & MODEL	TYPE	GPM	HEAD	ELECTRICAL		BASIN						NOTES
						MOTOR HP	VOLTS/PH (60 Hz.)	DIA.	HEIGHT	GAL.	INLET TYPE	INLET SIZE	DISCH SIZE	
DP-1	DHW RECIRC	TACO IL 0011	IN LINE	1.5	26	1/8	115/1	---------	---------	---------	---------	3/4"	3/4"	1
SP-1	SUMP PUMP	ZOELLER N152	SUBMERSIBLE	53	15	0.4	115/1	18"	30"	30	PIPED TRHU BASIN	4	1 1/2"	2
NOTES:														
1	POWER SUPPLY TO STARTER/CONTACTOR AND DISC SWITCH BY DIV 26. REFER TO SPECIFICATION SECTION 221116 FOR CONTROL REQUIREMENTS													
2	PLUG CONNECTION, COORDINATE WITH DIV 26.													

ELECTRIC DHW HEATER SCHEDULE - STORAGE TYPE

TAG	MANUFACTURER	MODEL	ELEC	HEAT INPUT (WATTS)	AMPS	ELEMENTS	1ST HOUR RECOVERY FLOW	TEMP RISE (DEG-F)	WATER STORAGE (GAL)	HEIGHT (INCHES)	DIA	NOTES
WH-1	AO SMITH	DRE-52-9	480/3/60	9,000	10.8	3.0	77 GPH	100	50	55.75"	21.75"	1, 2
NOTES:												
1. DISCONNECT SWITCH BY DIV. 26.												
2. PIPE T & P RELIEF VALVE TO DRAIN.												

PLUMBING FIXTURE SCHEDULE

TAG	DESCRIPTION	BRANCH SIZES				NOTES
		CW	HW	V	W	
P-1	WATER CLOSET, WALL MOUNT	1"	-	2"	3"	
P-1A	WATER CLOSET, WALL MOUNT ~ ADA	1"	-	2"	3"	
P-2	URINAL	1/2"	-	1-1/2"	2"	
P-2A	URINAL ~ ADA	1/2"	-	1-1/2"	2"	
P-3A	LAVATORY, WALL MOUNT ~ ADA	3/8"	3/8"	1-1/2"	2"	
P-3B	LAVATORY, UNDER-MOUNT SS ~ ADA	3/8"	3/8"	1-1/2"	2"	
P-4	JANITOR SINK	3/4"	3/4"	1-1/2"	2"	
P-5	UNDER MOUNT SINGLE BOWL SS ~ ADA	1/2"	1/2"	1-1/2"	2"	
P-6	BI-LEVEL ELECTRIC WATER COOLER ~ ADA	1/2"	-	1-1/2"	1-1/2"	
P-6A	BOTTLE FILLING STATION WATER COOLER ~ ADA	1/2"	-	1-1/2"	1-1/2"	
P-7	OUTDOOR WATER BOTTLE FILL STATION	1/2"	-	-	-	
HB	HOSE BIBB	3/4"	-	-	-	
WH	WALL HYDRANT	3/4"	-	-	-	
TP	TRAP PRIMER	1/2"	-	-	-	TO FLOOR DRAINS
FD-1	FLOOR DRAIN	-	-	1-1/2"	2"	
FD-2	FLOOR DRAIN	-	-	2"	3"	
DW	DISH WASHER HOOK-UP	-	1/2"	-	1-1/2"	PROVIDE DISHWASHER AIR GAP FITTING AT SINK TAIL PIECE & SHOCK ABSORBER

Allied Engineering
Structural Mechanical Electrical Plumbing
160 Veranda Street
Portland, Maine 04103
P: 207.221.2260
F: 207.221.2266
Web:www.allied-eng.com

Allied Project No: 12069 | Cad File:

AECOM
1 FEDERAL STREET, 8TH FLOOR
BOSTON, MA 02110
617.723.1700
www.aecom.com

A1 | PLUMBING SCHEDULES

NONE

STATE OF MAINE
DEPARTMENT OF TRANSPORTATION

DATE

FED PIN NO: NA

WIN NO: 017163.02 & 017163.03

STATE OF MAINE ANTHONY S. DAVIS No. 8834 LICENSED PROFESSIONAL ENGINEER

SIGNATURE

P.E. NUMBER 8834

DATE January 17, 2022

PROJECT INFORMATION

PROGRAM	-
PROJECT MANAGER	-
DESIGNER	AECOM
CONSULTANT	ALLIED ENGINEERING
PROJECT RESIDENT	-
CONTRACTOR	-
PROJECT COMPLETION DATE	-

MAINE DEPARTMENT OF TRANSPORTATION
ACADIA GATEWAY FACILITY
INTERMODAL AND WELCOME CENTER

PLUMBING SCHEDULES

COPYRIGHT 2022 ALLIED ENGINEERING, INC.

SHEET NUMBER

PL600

Filename: Date: Division: Username:

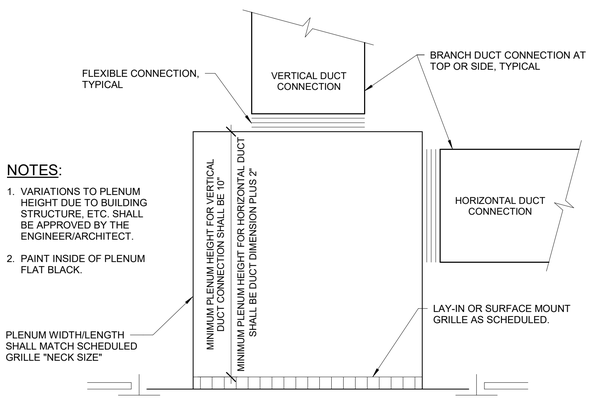

NOTES:

1. VARIATIONS TO PLENUM HEIGHT DUE TO BUILDING STRUCTURE, ETC. SHALL BE APPROVED BY THE ENGINEER/ARCHITECT.
2. PAINT INSIDE OF PLENUM FLAT BLACK.

C1	DETAIL - RETURN AIR REGISTER BOOT
NONE	

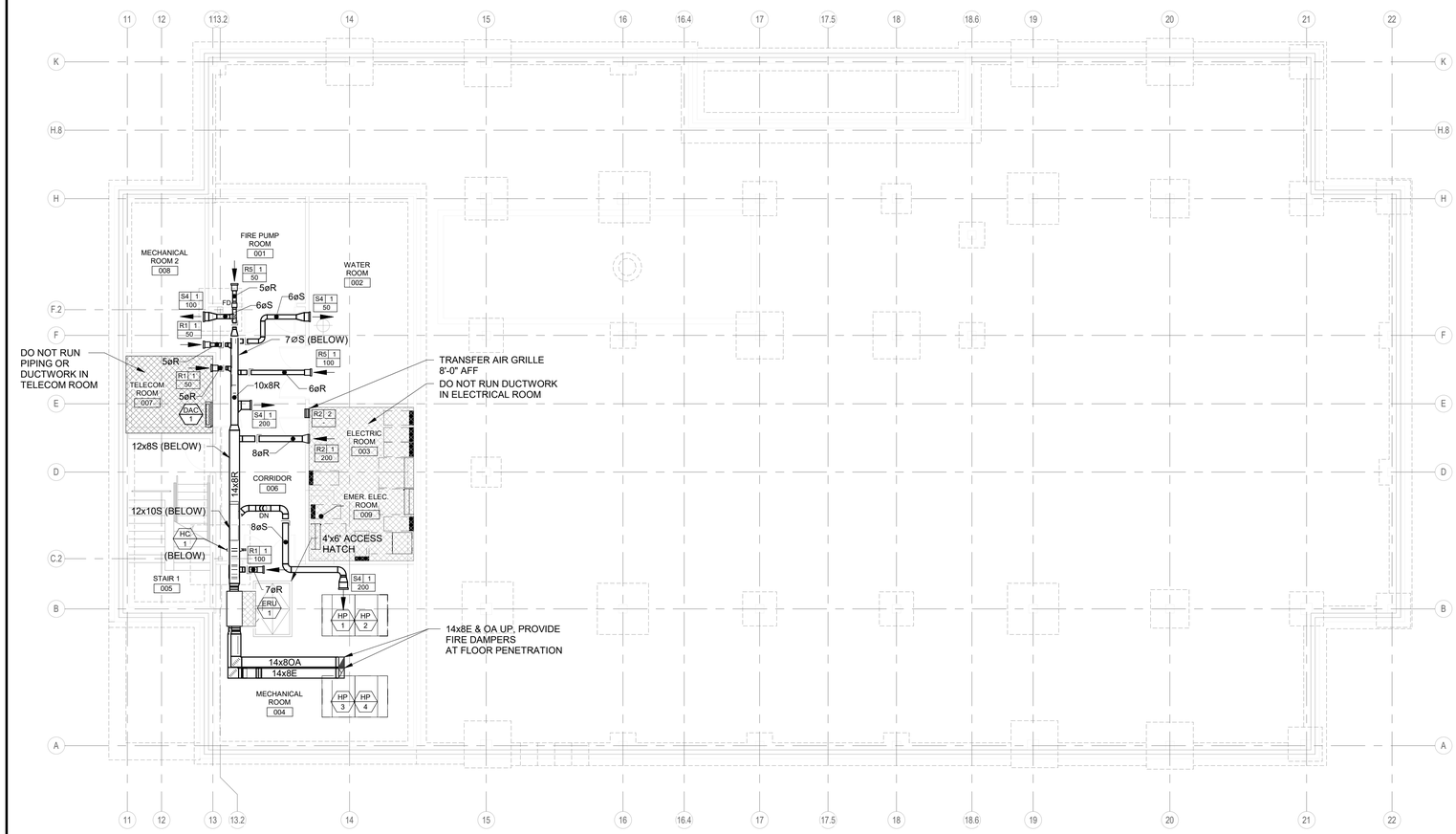

D4	MECHANICAL PLAN - BASEMENT LEVEL
1/8" = 1'-0"	

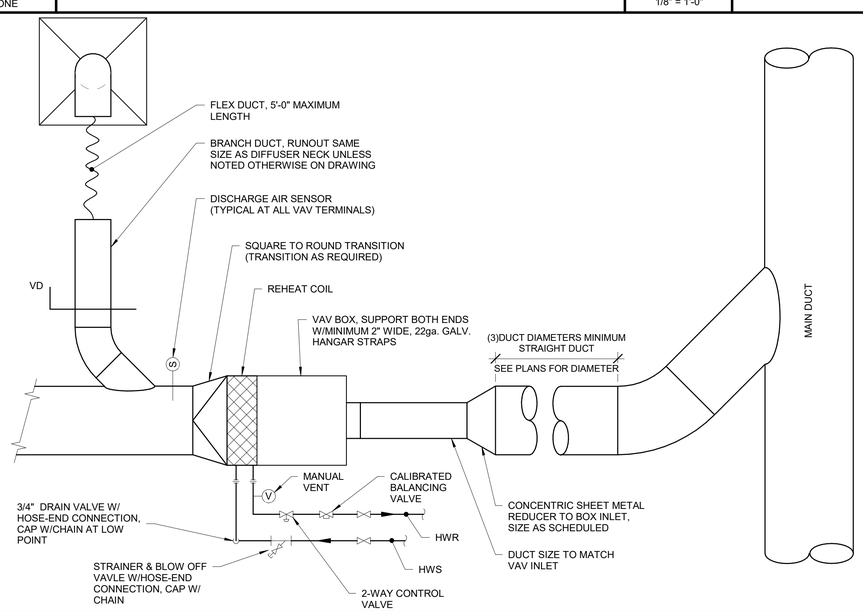

A1	DETAIL - VAV BOX SCHEMATIC
NONE	

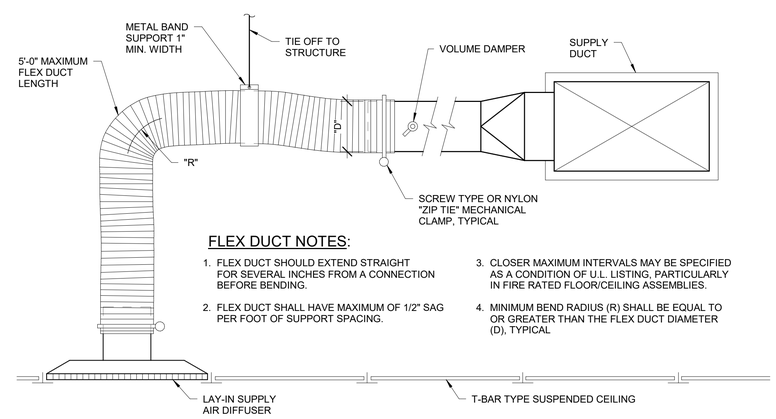

FLEX DUCT NOTES:

1. FLEX DUCT SHOULD EXTEND STRAIGHT FOR SEVERAL INCHES FROM A CONNECTION BEFORE BENDING.
2. FLEX DUCT SHALL HAVE MAXIMUM OF 1/2" SAG PER FOOT OF SUPPORT SPACING.
3. CLOSER MAXIMUM INTERVALS MAY BE SPECIFIED AS A CONDITION OF U.L. LISTING, PARTICULARLY IN FIRE RATED FLOOR/CEILING ASSEMBLIES.
4. MINIMUM BEND RADIUS (R) SHALL BE EQUAL TO OR GREATER THAN THE FLEX DUCT DIAMETER (D), TYPICAL

A5	DETAIL - SUPPLY AIR BRANCH CONNECTION
NONE	

PROJECT KEY PLAN

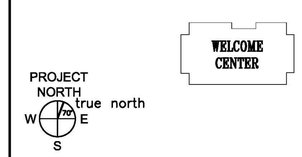

Allied Engineering
Structural Mechanical Electrical Plumbing
160 Veranda Street
Portland, Maine 04103
P: 207.221.2260
F: 207.221.2266
Web:www.allied-eng.com

AECOM
1 FEDERAL STREET, 8TH FLOOR
BOSTON, MA 02110
617.723.1700
www.aecom.com

Allied Project No: 12069 | Cad File:

STATE OF MAINE
DEPARTMENT OF TRANSPORTATION

	DATE

FED PIN NO: NA
WIN NO: 017163.02 & 017163.03

STATE OF MAINE ANTHONY S. DAVIS No. 8834 LICENSED PROFESSIONAL ENGINEER

SIGNATURE

P.E. NUMBER 8834

DATE January 17, 2022

PROJECT INFORMATION

		DATE
PROGRAM		
PROJECT MANAGER	AECOM	
DESIGNER	ALLIED ENGINEERING	
CONSULTANT		
PROJECT RESIDENT		
CONTRACTOR		
PROJECT COMPLETION DATE		

MAINE DEPARTMENT OF TRANSPORTATION
ACADIA GATEWAY FACILITY
INTERMODAL AND WELCOME CENTER

MECHANICAL PLAN
– BASEMENT LEVEL

SHEET NUMBER
MH100

Username:
Division:
Date:
Filename:

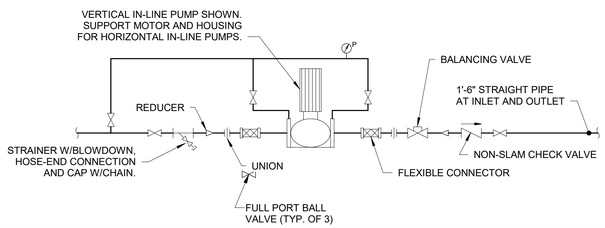

D1 | DETAIL - VERTICAL IN-LINE PUMP

NONE

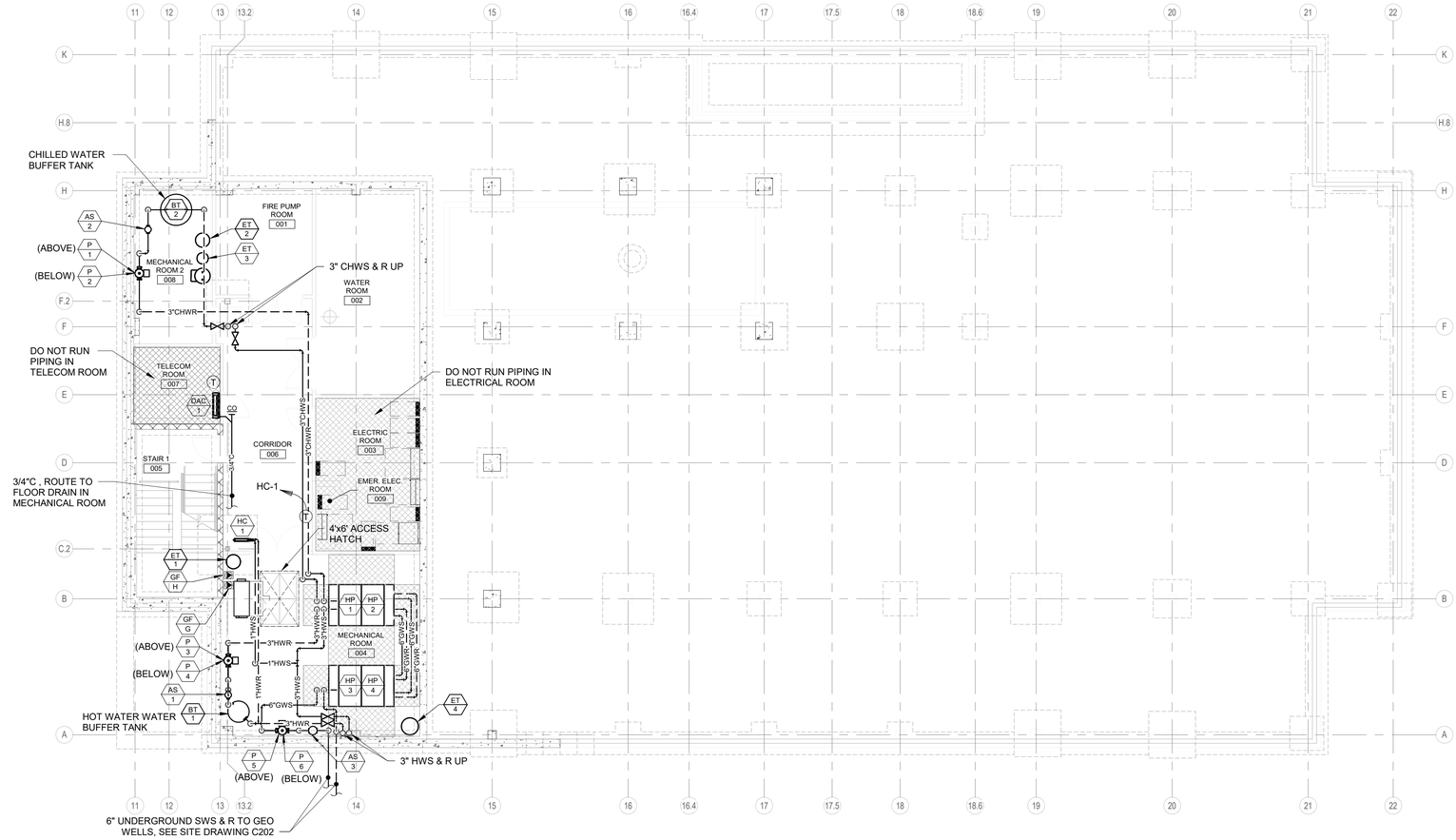

D4 | MECHANICAL PIPING PLAN - BASEMENT LEVEL

1/8" = 1'-0"

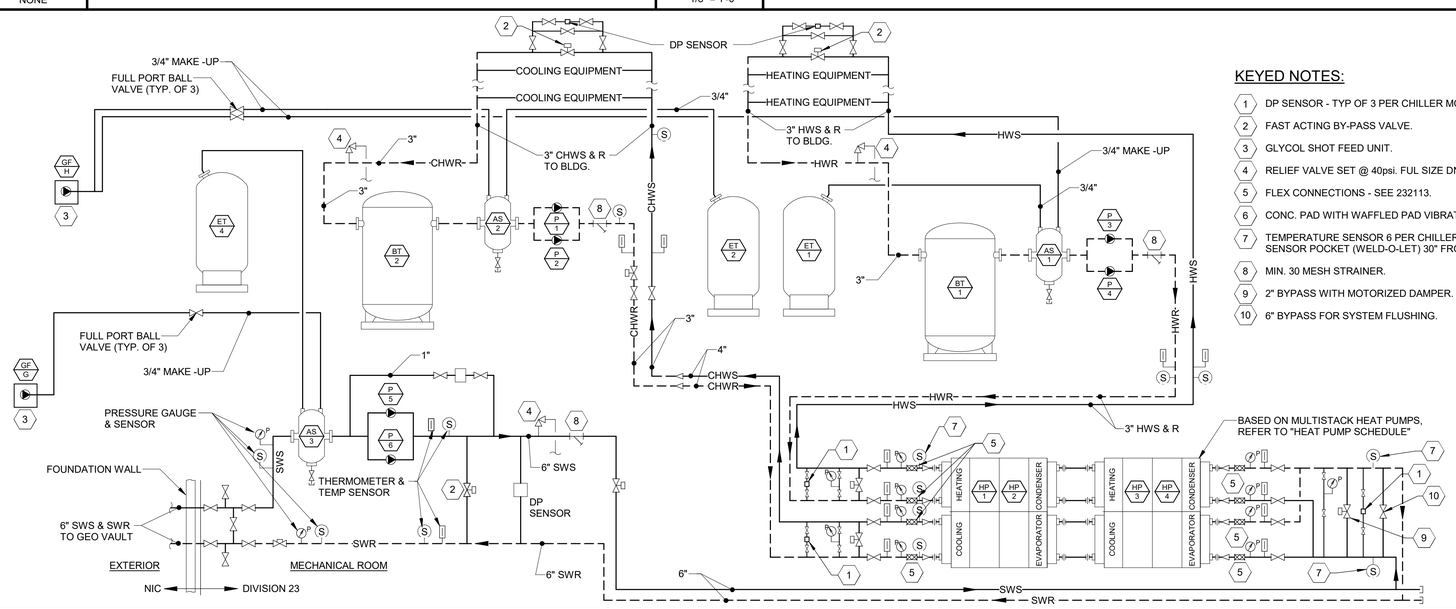

KEYED NOTES:

1. DP SENSOR - TYP OF 3 PER CHILLER MODULE.
2. FAST ACTING BY-PASS VALVE.
3. GLYCOL SHOT FEED UNIT.
4. RELIEF VALVE SET @ 40psi. FUL SIZE DN TO 6" AFF.
5. FLEX CONNECTIONS - SEE 232113.
6. CONC. PAD WITH WAFFLED PAD VIBRATION ISOLATION.
7. TEMPERATURE SENSOR 6 PER CHILLER MODULE. PROVIDE SENSOR POCKET (WELD-O-LET) 30" FROM END OF HP.
8. MIN. 30 MESH STRAINER.
9. 2" BYPASS WITH MOTORIZED DAMPER.
10. 6" BYPASS FOR SYSTEM FLUSHING.

A1 | GEOTHERMAL HEATING/COOLING PIPING SCHEMATIC

NONE

PROJECT KEY PLAN

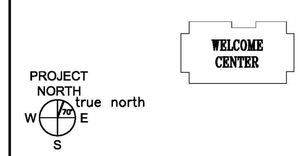

Allied Engineering
Structural Mechanical Electrical Plumbing
160 Veranda Street
Portland, Maine 04103
P: 207.221.2260
F: 207.221.2266
Web:www.allied-eng.com

AECOM
1 FEDERAL STREET, 8TH FLOOR
BOSTON, MA 02110
617.723.1700
www.aecom.com

Allied Project No: 12069 | Cad File:

STATE OF MAINE
DEPARTMENT OF TRANSPORTATION

DATE

FED PIN NO: NA

WIN NO: 017163.02 & 017163.03

STATE OF MAINE ANTHONY S. DAVIS No. 8834 PROFESSIONAL ENGINEER

SIGNATURE

P.E. NUMBER 8834

DATE January 17, 2022

PROJECT INFORMATION

PROGRAM	–
PROJECT MANAGER	–
DESIGNER	AECOM
CONSULTANT	ALLIED ENGINEERING
PROJECT RESIDENT	–
CONTRACTOR	–
PROJECT COMPLETION DATE	–

MAINE DEPARTMENT OF TRANSPORTATION
ACADIA GATEWAY FACILITY
INTERMODAL AND WELCOME CENTER

MECHANICAL PIPING PLAN – BASEMENT LEVEL

SHEET NUMBER

MP100

Username:
Division:
Date:
Filename:

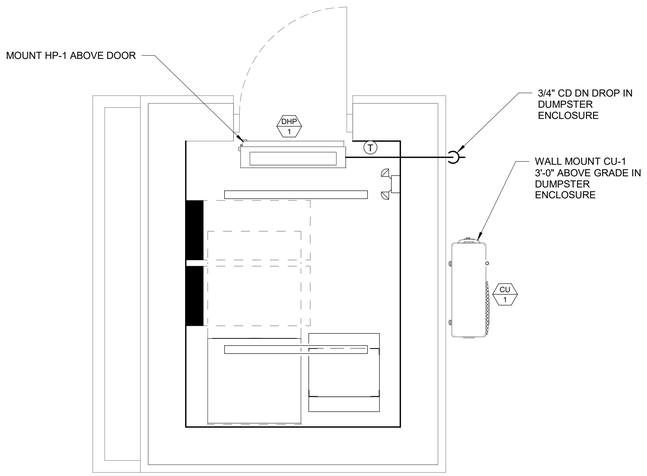

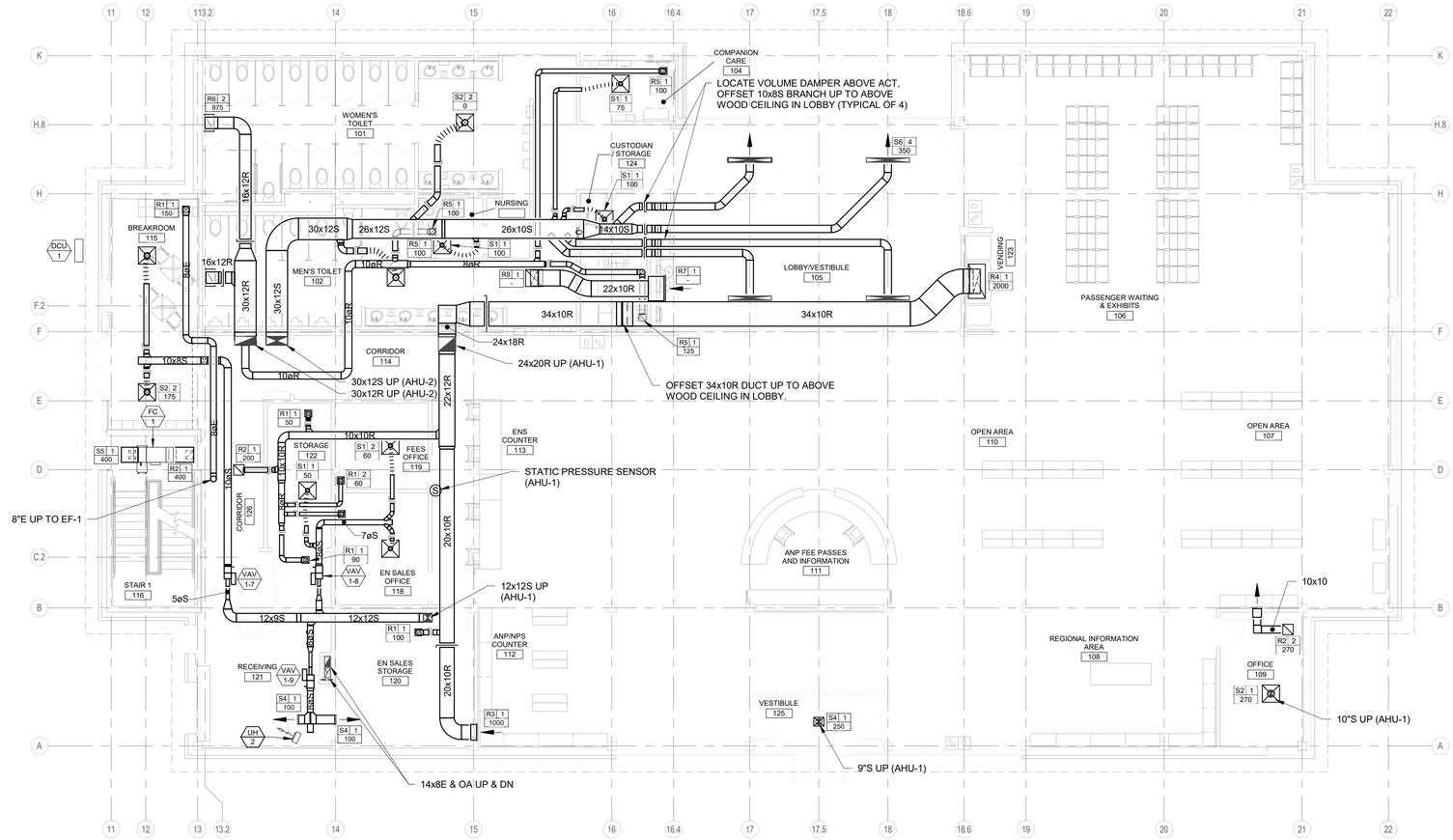

C1	EV CHARGING BUILDING - MECHANICAL ENLARGEMENT	D4	MECHANICAL PLAN - FIRST FLOOR
1/2" = 1'-0"		1/8" = 1'-0"	

Username:

Division:

Date:

Filename:

PROJECT KEY PLAN

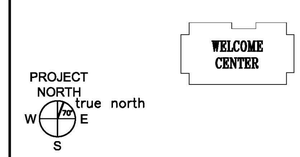

Allied Engineering
Structural Mechanical Electrical Plumbing
160 Veranda Street
Portland, Maine 04103
P: 207.221.2260
F: 207.221.2266
Web:www.allied-eng.com

Allied Project No: 12069 | Cad File:

AECOM
1 FEDERAL STREET, 8TH FLOOR
BOSTON, MA 02110
617.723.1700
www.aecom.com

STATE OF MAINE
DEPARTMENT OF TRANSPORTATION

DATE

FED PIN NO: NA

WIN NO: 017163.02 & 017163.03

STATE OF MAINE ANTHONY S. DAVIS No. 8834 LICENSED PROFESSIONAL ENGINEER

SIGNATURE

P.E. NUMBER 8834

DATE January 17, 2022

PROJECT INFORMATION

PROGRAM	
PROJECT MANAGER	AECOM
DESIGNER	ALLIED ENGINEERING
CONSULTANT	
PROJECT RESIDENT	
CONTRACTOR	
PROJECT COMPLETION DATE	

MAINE DEPARTMENT OF TRANSPORTATION

ACADIA GATEWAY FACILITY

INTERMODAL AND WELCOME CENTER

MECHANICAL PLAN
— FIRST FLOOR

SHEET NUMBER

MH101

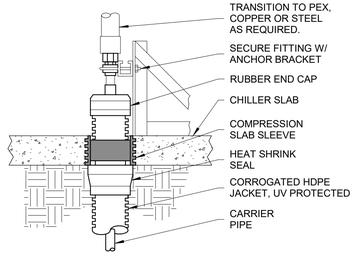

F1	DETAIL - CHWS/R PIPE PENETRATION AT CHILLER SLAB
NONE	

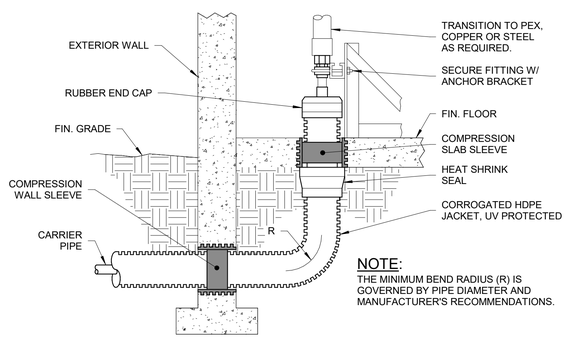

NOTE:
THE MINIMUM BEND RADIUS (R) IS GOVERNED BY PIPE DIAMETER AND MANUFACTURER'S RECOMMENDATIONS.

C1	DETAIL - PRE-INSULATED FLEXIBLE UNDERGROUND CHWS/R PIPE ENTRANCE
NONE	

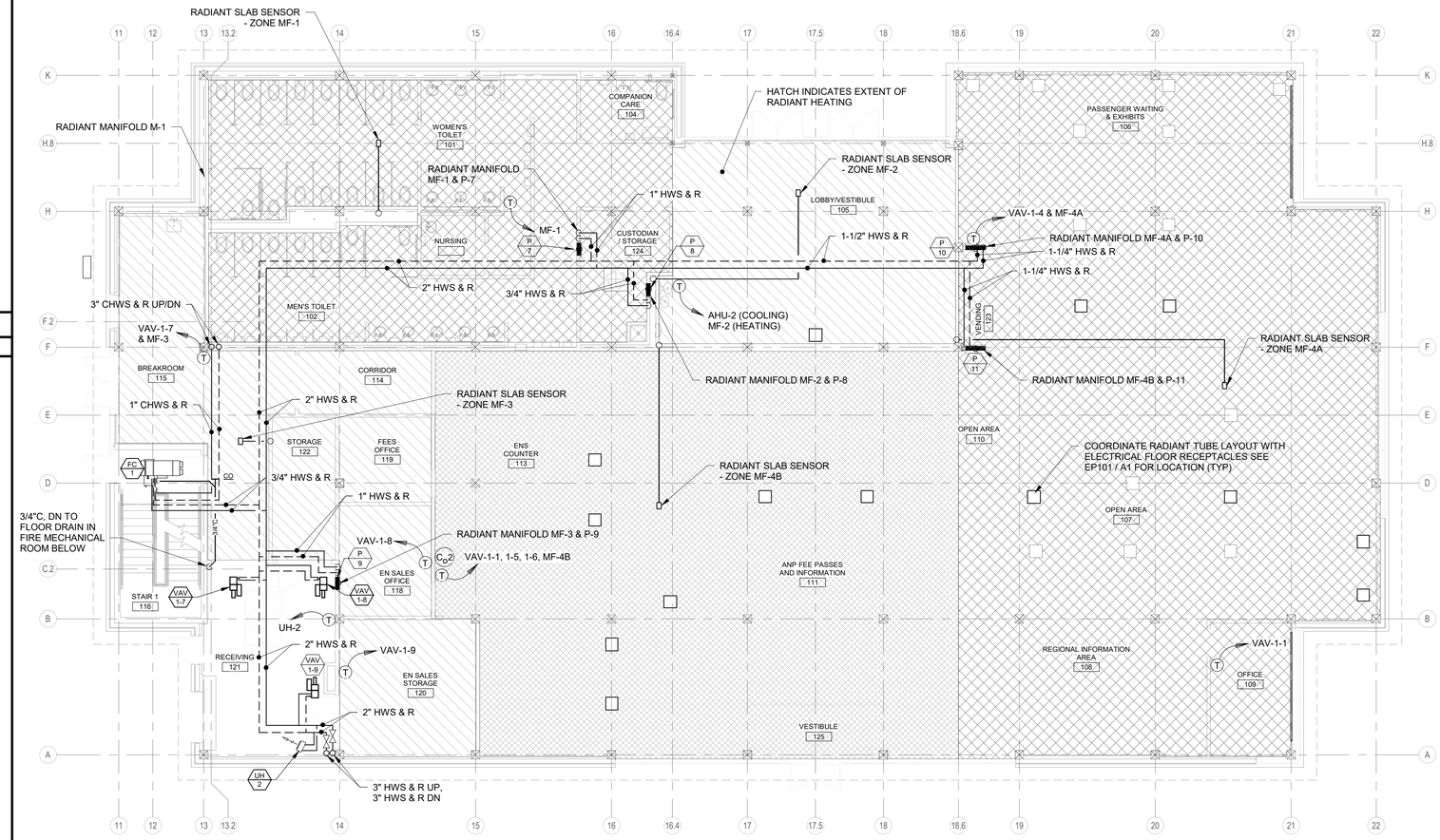

D4	MECHANICAL PIPING PLAN - FIRST FLOOR
1/8" = 1'-0"	

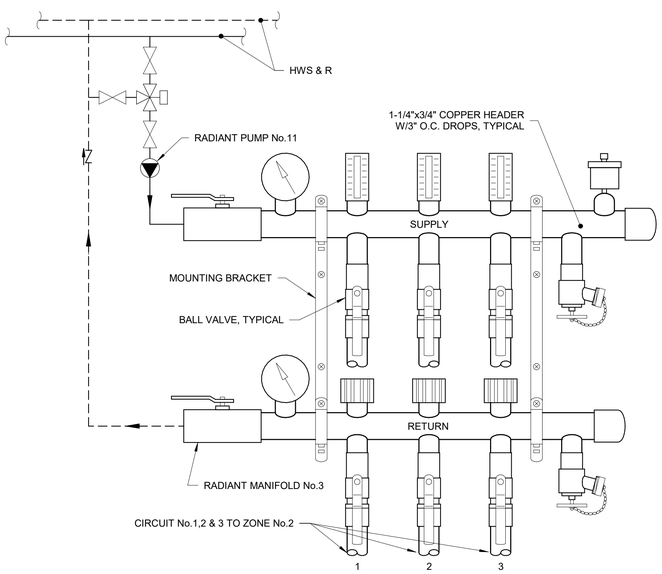

A1	DETAIL - RADIANT MANIFOLD PIPING
NONE	

PROJECT KEY PLAN

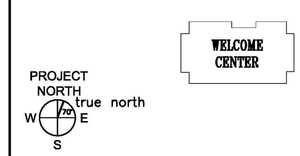

Allied Engineering
Structural Mechanical Electrical Plumbing
160 Veranda Street
Portland, Maine 04103
P: 207.221.2260
F: 207.221.2266
Web:www.allied-eng.com

AECOM
1 FEDERAL STREET, 8TH FLOOR
BOSTON, MA 02110
617.723.1700
www.aecom.com

Allied Project No: 12069 | Cad File:

STATE OF MAINE
DEPARTMENT OF TRANSPORTATION

DATE

FED PIN NO: NA
WIN NO: 017163.02 & 017163.03

STATE OF MAINE ANTHONY S. DAVIS No. 8834 PROFESSIONAL ENGINEER

SIGNATURE

P.E. NUMBER 8834

DATE January 17, 2022

PROJECT INFORMATION

PROGRAM	–
PROJECT MANAGER	–
DESIGNER	AECOM
CONSULTANT	ALLIED ENGINEERING
PROJECT RESIDENT	–
CONTRACTOR	–
PROJECT COMPLETION DATE	–

MAINE DEPARTMENT OF TRANSPORTATION
ACADIA GATEWAY FACILITY
INTERMODAL AND WELCOME CENTER

MECHANICAL PIPING PLAN – FIRST FLOOR

Copyright 2022 AECOM Technical Services, Inc.

SHEET NUMBER
MP101

Filename: – Date: – Division: – Username: –

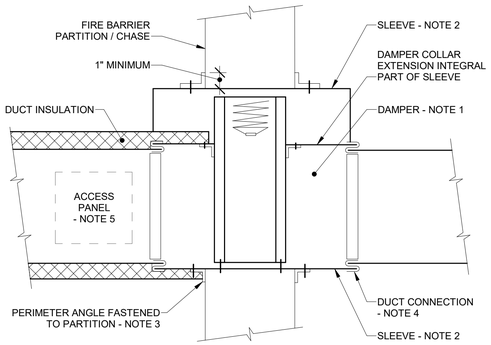

NOTES:

1. VERTICAL DAMPER INSTALLATION SHOWN - HORIZONTAL DAMPER INSTALLATION SIMILAR. FOLLOW ALL MANUFACTURER'S INSTRUCTIONS, INCLUDING FASTENER OPTIONS, GAUGES OF SLEEVE AND PERIMETER ANGLES. FIRE DAMPERS MUST BE INSTALLED IN THE PARTITION OR FLOOR AND NOT OUTSIDE OF THE PENETRATION.

2. GALVANIZED SLEEVE - GAUGE OF NOT LESS THAN THAT OF THE CONNECTING DUCT. FASTEN SLEEVE TO DAMPER FRAME / PERIMETER ANGLES.

3. PERIMETER ANGLES - GALVANIZED STEEL OF NOT LESS THAN 1-1/2"x1-1/2" - 14 GAUGE TO PROVIDE 1" MINIMUM OVERLAP OF OPENING ON ALL 4 SIDES.

4. BREAK-AWAY DUCT CONNECTION - CONTRACTOR'S OPTION OF TYPE AS SHOWN IN SMACNA LPDS, FIGURE 2-13, SEAL JOINTS.

5. ACCESS PANELS - SIZE AND LOCATION TO PERMIT SERVICING THE FUSIBLE LINK OR LINKS.

D1	TYPICAL FIRE DAMPER
NONE	

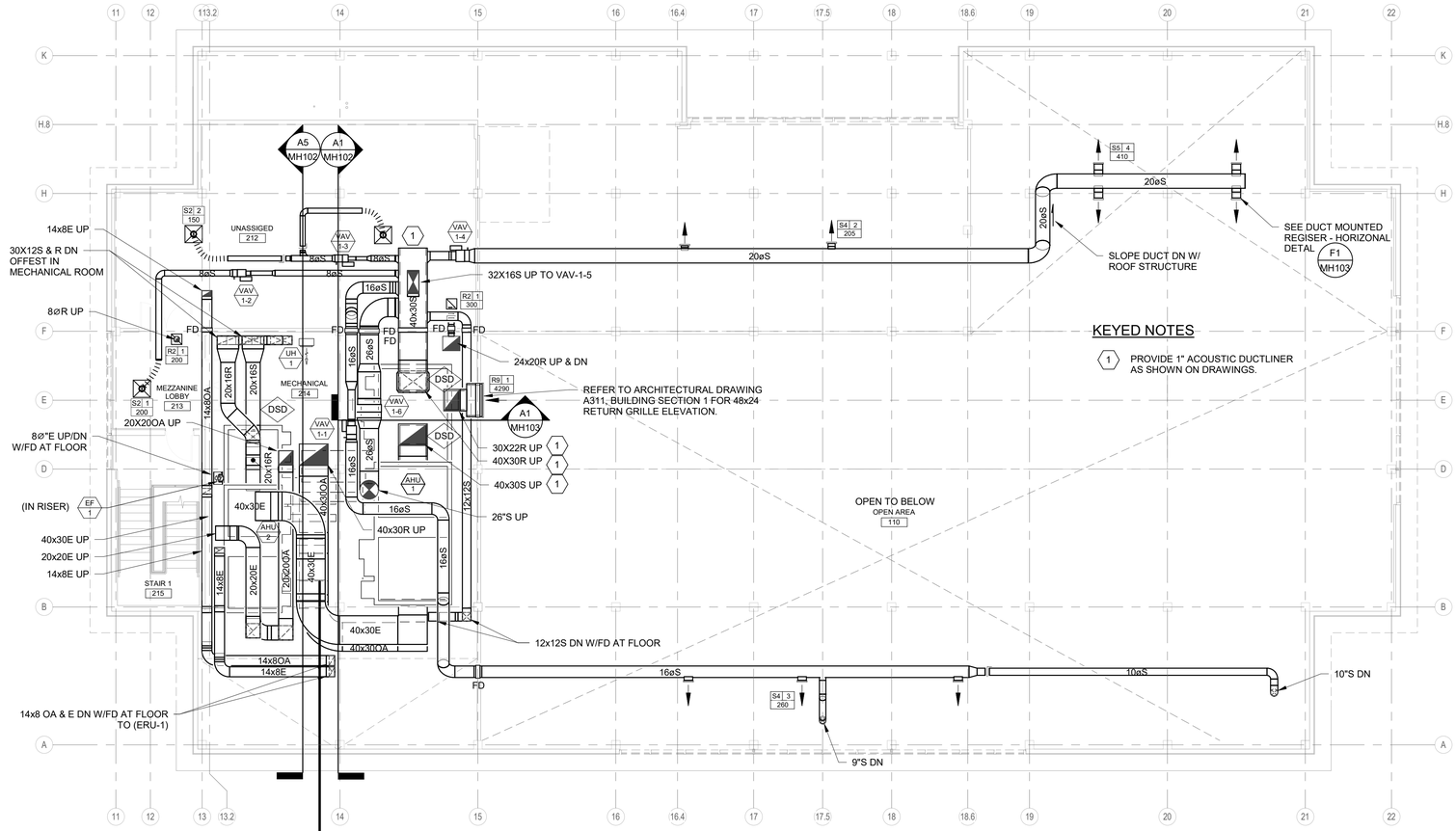

KEYED NOTES

1. PROVIDE 1" ACOUSTIC DUCTLINER AS SHOWN ON DRAWINGS.

D4	MECHANICAL PLAN - MEZZANINE
1/8" = 1'-0"	

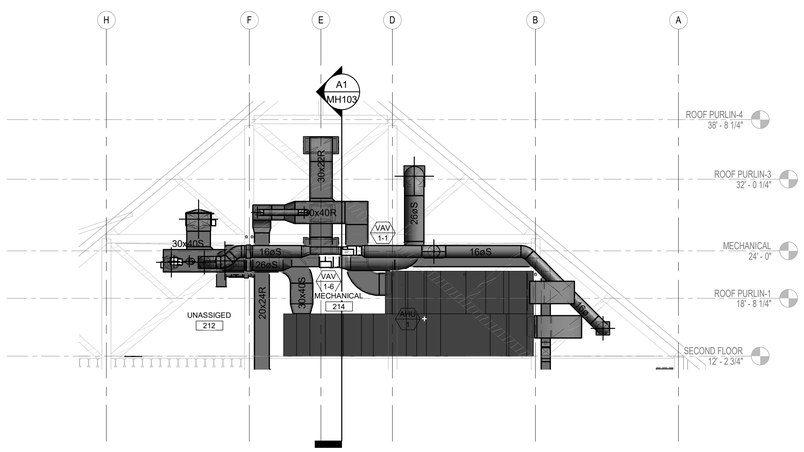

A1	MECHANICAL ROOM SECTION 1
1/8" = 1'-0"	

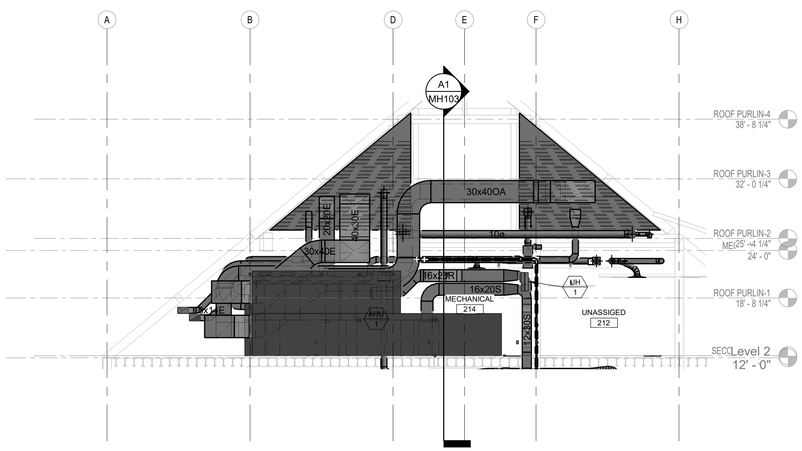

A5	MECHANICAL ROOM SETION 2
1/8" = 1'-0"	

PROJECT KEY PLAN

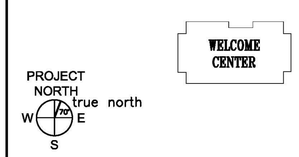

Allied Engineering
Structural Mechanical Electrical Plumbing
160 Veranda Street
Portland, Maine 04103
P: 207.221.2260
F: 207.221.2266
Web: www.allied-eng.com

Allied Project No: 12069 | Cad File:

AECOM
1 FEDERAL STREET, 8TH FLOOR
BOSTON, MA 02110
617.723.1700
www.aecom.com

STATE OF MAINE
DEPARTMENT OF TRANSPORTATION

DATE

FED PIN NO: NA

WIN NO: 017163.02 & 017163.03

STATE OF MAINE ANTHONY S. DAVIS No. 8834 LICENSED PROFESSIONAL ENGINEER

SIGNATURE

P.E. NUMBER 8834

DATE January 17, 2022

PROJECT INFORMATION

PROGRAM	-
PROJECT MANAGER	AECOM
DESIGNER	ALLIED ENGINEERING
CONSULTANT	-
PROJECT RESIDENT	-
CONTRACTOR	-
PROJECT COMPLETION DATE	-

MAINE DEPARTMENT OF TRANSPORTATION

ACADIA GATEWAY FACILITY

INTERMODAL AND WELCOME CENTER

MECHANICAL PLAN – MEZZANINE

SHEET NUMBER

MH102

Filename: Date: Division: Username:

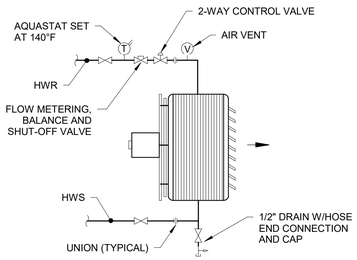

F1	DETAIL - UNIT HEATER PIPING
NONE	

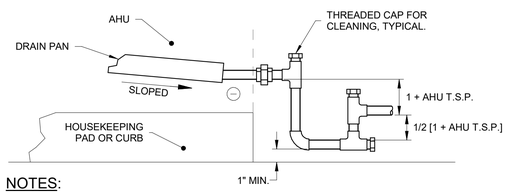

NOTES:

1. 1"ø PIPE MINIMUM. OR SIZE PER DRAIN TAP IN AHU. INSULATE FOR CONDENSATE CONTROL AS REQUIRED BY SPECIFICATIONS DIVISION 230700.
2. PAD HEIGHT DETERMINED BY MINIMUM SPACE REQUIRED TO INSTALL TRAP.
3. ROUTE AHU CONDENSATE PIPE TO FLOOR DRAIN PROVIDED.

D1	DETAIL - TYPICAL CONDENSATE DRAIN PAN PIPING
NONE	

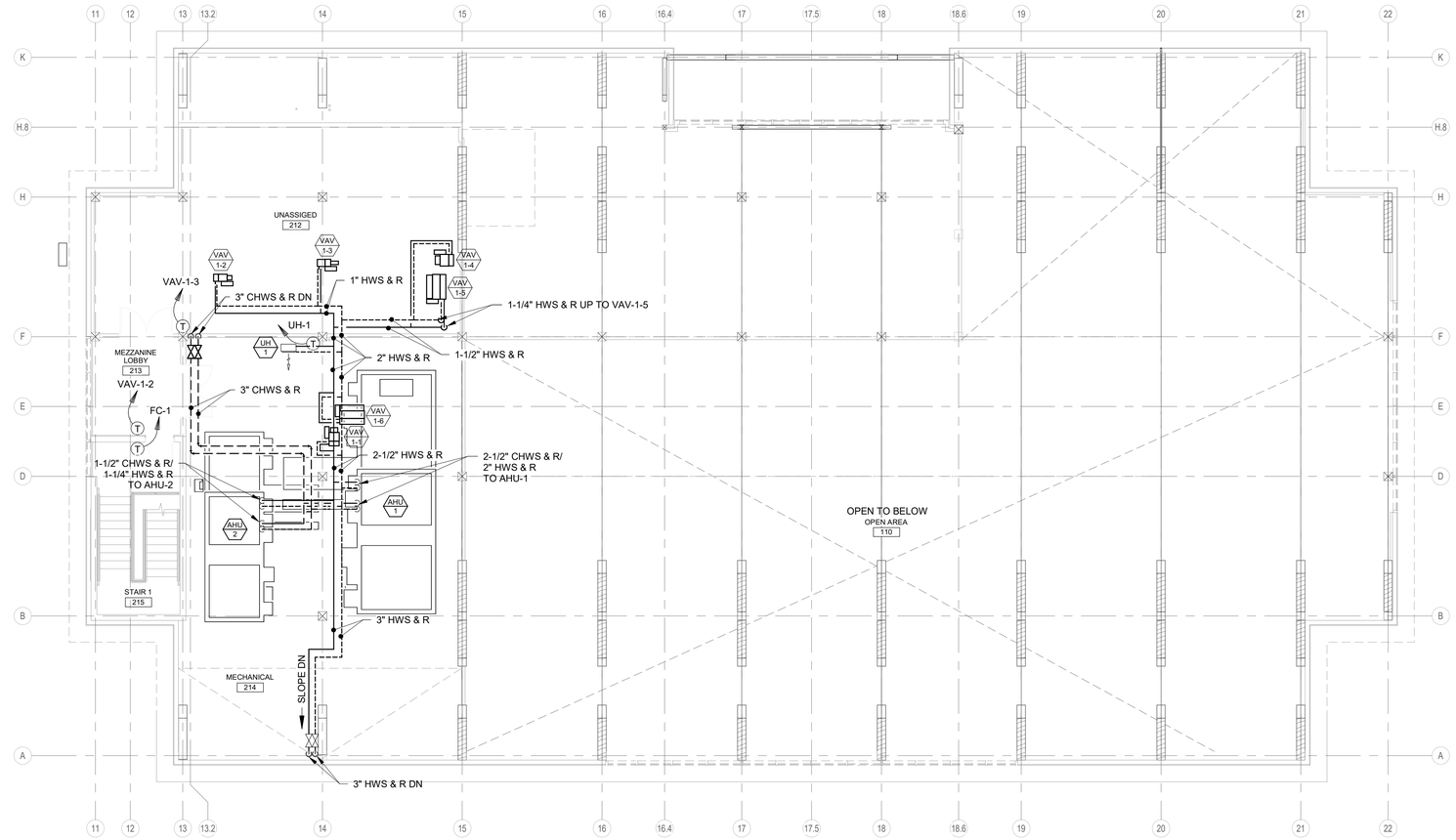

D4	MECHANICAL PIPING PLAN - MEZZANINE
1/8" = 1'-0"	

KEYED NOTES:

1. MANUAL AIR VENTS AT ALL HIGH POINTS, TYPICAL.
2. 3/4" BALL VALVE W/HOSE END DRAIN AT ALL LOW POINTS, TYPICAL.
3. SHUT-OFF VALVE, TYPICAL.
4. CIRCUIT SETTER, TYPICAL.
5. REDUCERS AT CIRCUIT SETTERS AND CONTROL VALVE, TYPICAL.
6. TWO WAY AUTOMATIC CONTROL VALVE.
7. LOW POINT DRAIN.

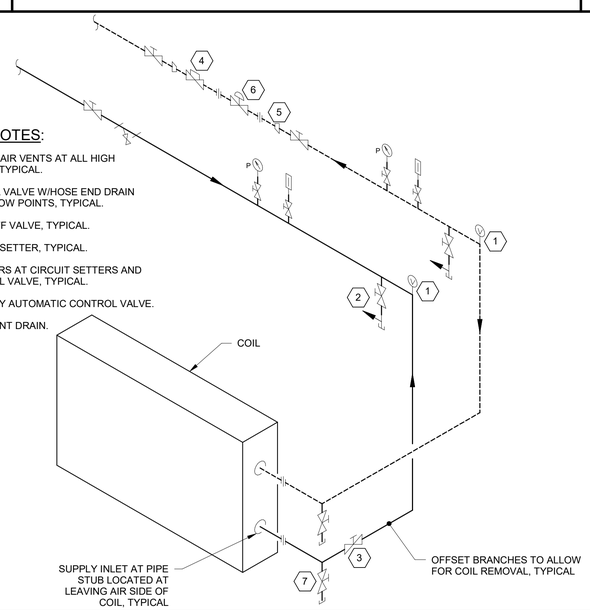

A1	DETAIL - HYDRONIC COIL PIPING SCHEMATIC - 2-WAY VALVE
NONE	

PROJECT KEY PLAN

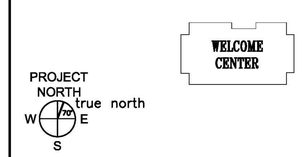

Allied Engineering
Structural Mechanical Electrical Plumbing
160 Veranda Street
Portland, Maine 04103
P: 207.221.2260
F: 207.221.2266
Web:www.allied-eng.com

AECOM
1 FEDERAL STREET, 8TH FLOOR
BOSTON, MA 02110
617.723.1700
www.aecom.com

Allied Project No: 12069 | Cad File:

STATE OF MAINE
DEPARTMENT OF TRANSPORTATION

DATE

FED PIN NO: NA

WIN NO: 017163.02 & 017163.03

STATE OF MAINE ANTHONY S. DAVIS No. 8834 LICENSED PROFESSIONAL ENGINEER

SIGNATURE

P.E. NUMBER 8834

DATE January 17, 2022

PROJECT INFORMATION

PROGRAM	
PROJECT MANAGER	AECOM
DESIGNER	ALLIED ENGINEERING
CONSULTANT	
PROJECT RESIDENT	
CONTRACTOR	
PROJECT COMPLETION DATE	

MAINE DEPARTMENT OF TRANSPORTATION
ACADIA GATEWAY FACILITY
INTERMODAL AND WELCOME CENTER

MECHANICAL PIPING PLAN – MEZZANINE

SHEET NUMBER
MP102

Username:
Division:
Date:
Filename:

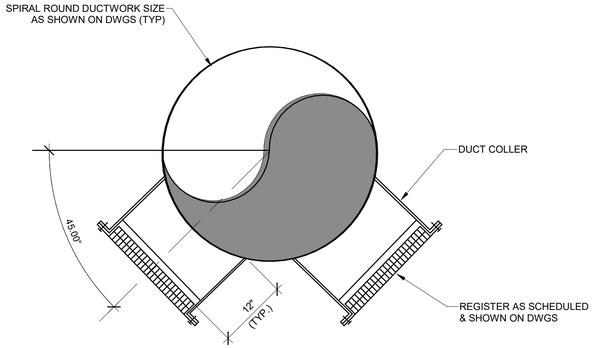

F1	TYPICAL DUCT MOUNTED REGISTER - HORIZONTAL
NONE	

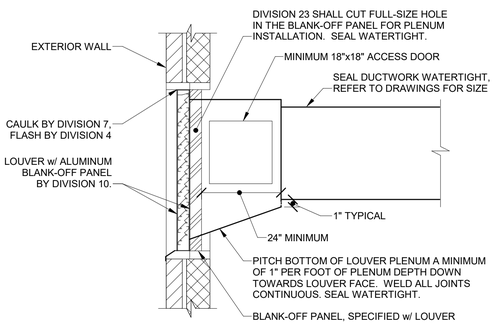

NOTE:
REFER TO ARCHITECTURAL LOUVER DETAILS FOR MORE INFORMATION.

D1	EXTERIOR LOUVER
NONE	

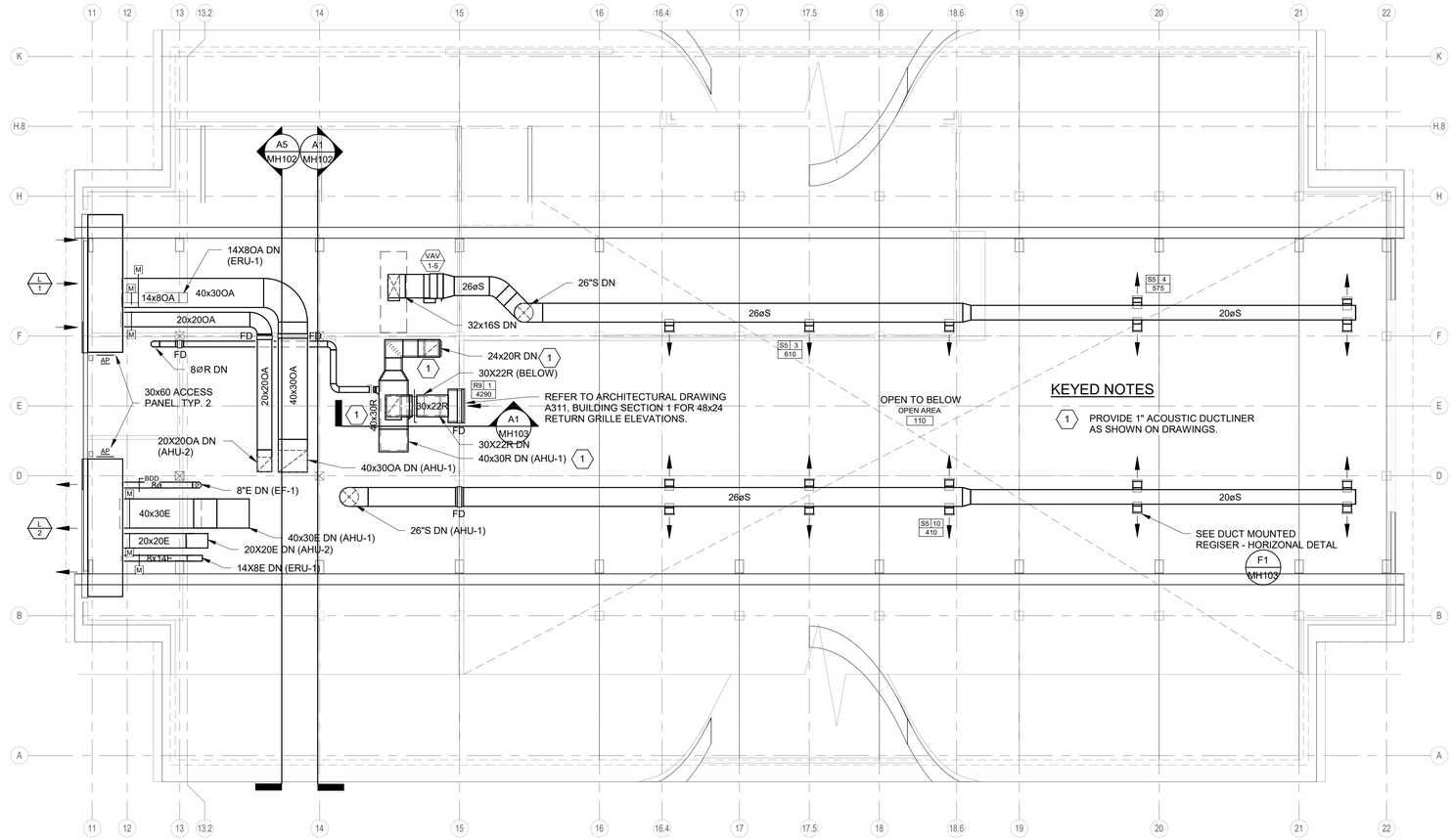

KEYED NOTES

1. PROVIDE 1" ACOUSTIC DUCTLINER AS SHOWN ON DRAWINGS.

D4	MECHANICAL PLAN - UPPER MEZZANINE
1/8" = 1'-0"	

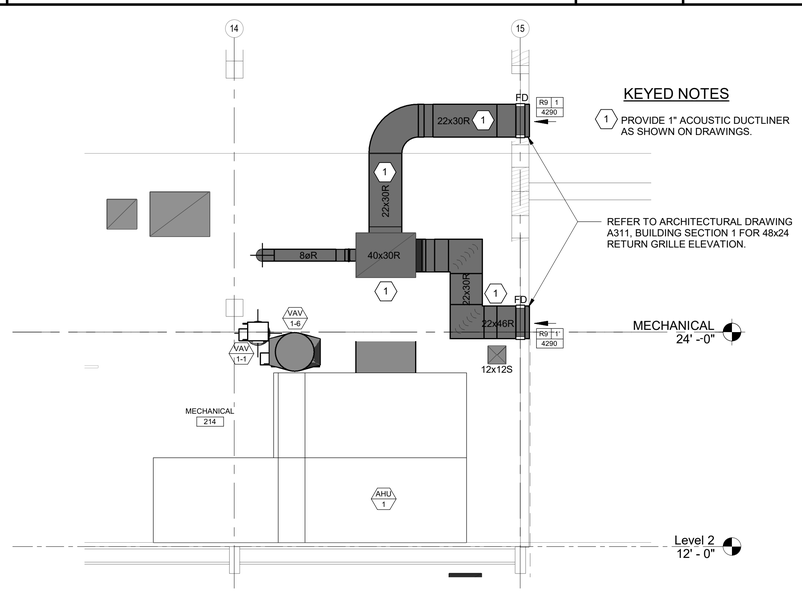

KEYED NOTES

1. PROVIDE 1" ACOUSTIC DUCTLINER AS SHOWN ON DRAWINGS.

A1	AHU-1 RETURN DUCTWORK SECTION
1/4" = 1'-0"	

PROJECT KEY PLAN

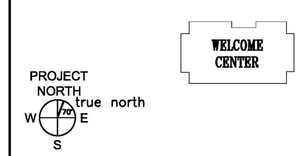

Allied Engineering
Structural Mechanical Electrical Plumbing
160 Veranda Street
Portland, Maine 04103
P: 207.221.2260
F: 207.221.2266
Web:www.allied-eng.com

AECOM
1 FEDERAL STREET, 8TH FLOOR
BOSTON, MA 02110
617.723.1700
www.aecom.com

Allied Project No: 12069 | Cad File:

STATE OF MAINE
DEPARTMENT OF TRANSPORTATION

DATE

FED PIN NO: NA
WIN NO: 017163.02 & 017163.03

STATE OF MAINE ANTHONY S. DAVIS No. 8834 LICENSED PROFESSIONAL ENGINEER

SIGNATURE

P.E. NUMBER 8834

DATE January 17, 2022

PROJECT INFORMATION

PROGRAM	
PROJECT MANAGER	
DESIGNER	AECOM
CONSULTANT	ALLIED ENGINEERING
PROJECT RESIDENT	
CONTRACTOR	
PROJECT COMPLETION DATE	

MAINE DEPARTMENT OF TRANSPORTATION
ACADIA GATEWAY FACILITY
INTERMODAL AND WELCOME CENTER

MECHANICAL PLAN
– UPPER MEZZANINE

SHEET NUMBER

MH103

Filename: Date: Division: Username:

SPLIT A/C UNIT SCHEDULE

UNIT	DAC-1
SERVES	
COOLING MBH	12.0
REFRIGERANT	R410a
INDOOR UNIT:	WALL MOUNT
MITSUBISHI MODEL NO.	PKA-A12HA
WEIGHT, LBS.	29
CFM LOW	320
CFM HIGH	425
VOLTAGE/PHASE	208/1
SEER	15.2
BREAKER SIZE, AMPS	15
OUTDOOR COND. UNIT:	**DCU-1**
MITSUBISHI MODEL NO.	PUY-A12NHA3
WEIGHT, LBS.	41
LIQUID LINE SIZE	1/4"
HOT GAS LINE SIZE	1/2"
VOLTAGE/PHASE	208/1
MCA	13.0
MOCP	15
NOTES:	
1. POWER TO CU'S BY DIV...	
CU PROVIDED BY DIV 23.	

MULTI - SPLIT HEAT PUMP UNIT SCHEDULE

INDOOR UNITS	DHP-1
ARRANGEMENT	WALL MOUNTED
COOLING BTUH	21,000
HEATING BTUH @ 47F	30,000
HEATING BTUH @ -5F	19,000
MITSUBISHI MODEL NO.	MSZ-FS18NA
DIMENSIONS - H X W X D	9-1/4" x36" x 12"
WEIGHT, LBS.	34
CFM	304
EXT S.P., IN. WC	0.21"
SOUND dBA - HIGH CFM	40 dB(A)
ELECTRICAL	208/230-1
ELECTRICAL, MCA	1A
COND. DRAIN SIZE	5/8"
LIQUID LINE SIZE	1/4"
GAS LINE SIZE	1/2"
OUTDOOR COND. UNIT:	**CU-1**
MITSUBISHI COND UNIT MODEL NO.	MUZ-FS18NAH
COOLING BTUH	21,000
HEATING BTUH	30,000
REFRIGERANT	R410A
ELECTRICAL	208-230/1/60
MCA	18
FUSE/BREAKER	20
SOUND dBA - HIGH	55dB(A)
DIMENSIONS (H x W x D)	34" x33" x 13"
WEIGHT, LBS.	135
NOTES:	
1. POWER TO CU'S BY DIV 26. WIRING...	

HEAT-RECOVERY CHILLER-HEATER "(HP-1-HP-4)" SYSTEM SCHEDULE

Basis of Design: MULTISTACK WITH FOUR (2) 20 NOMINAL TON MODULES (HP-1 and HP-2) AND (2) 10 TON MODULES (HP-3 AND HP-4)
Mechanical Modules: (2) MSH020VNHCGHAAJ-BACAC-BGI-CA-B AND (2) MSH010VNHCGHAAJ-BACAC-BGI-CA-B
Accessory Modules: (4) VMEBADHDDADADA2 VME'S, 4 FRONT, 0 REAR

PERFORMANCE						EVAPORATOR					CONDENSER				
Capacity (Tons)	KW	THR (mbh)	KW/ ton	EER	COP	Flow Rate (GPM)	Min Flow Rate (GPM)	EWT °F	LWT °F	DP (ft)	Flow Rate (GPM)	Min Flow Rate (GPM)	EWT °F	LWT °F	DP (ft)
COOLING PERFORMANCE DATA - BASED ON ALL MODULES OPERATING IN COOLING MODE															
56.00	45.49	827.30	0.812	14.77	4.31	96.00	24	57.00	42.00	6.00	177.00	44.20	85.00	95.00	11.29
						BLDG.					GEO				
SIMULTANEOUS PERFORMANCE DATA - BASED ON ZERO (0) 20-TON MODULE OPERATING AND (2) 10 TON MODULES OPERATING															
20.00	26.68	331.10	1.334	9.00	6.28	34.30	17	57.00	42.00	6.00	35.40	16.80	105.00	125.00	6.00
						BLDG.					BLDG.				
HEATING PERFORMANCE DATA - BASED ON ALL MODULES OPERATING IN HEATING MODE															
40.0	65.43	703.30	1.636	7.34	3.15	171.40	42.90	32.00	26.00	13.73	75.09	18.80	105.00	125.00	6.00
						GEO					BLDG				

UNIT DATA			EVAPORATOR	CONDENSER
	HP-1/HP-2	HP-3/HP-4		
MCA:	121	68	CHW MODE - FLOW TO BUILDING	CHW MODE - FLOW TO WELLS
MOP:	150	90	HW MODE - FLOW TO WELLS	HW MODE - FLOW TO BUILDING
VOLTAGE:...				

R410A REFRIGERANT CHARGE, LBS. PER CIRCUIT: 6.5/5.5
ALL WATER CIRCUITS SHALL HAVE 25% PG
HEADER SIZES: 6"

GLYCOL FEED SYSTEM (232113)

TAG	SERVES	J.L. WINGERT MODEL	PUMP GPM	DISCH PRESSURE	CUT-IN PSIG	CUT-OUT PSIG	PUMP HP	V-PH	TANK GAL	INLET / DISCH SIZE	ELECTRICAL COORDINATION	
											STARTER FURN. BY	DISC. SWITCH FURN BY
GF-H	HOT/CHILLED	GL-50E1-C	1.6	100	25	35	1/3	115/1	50	3/4"	FURN BY MFR.	8 FT POWER CORD W/PLUG FURN. BY MFR.
GF-G	GEOTHERMAL	GL-50E1-C	1.6	100	20	30	1/3	115/1	50	3/4"	FURN BY MFR.	8 FT POWER CORD W/PLUG FURN. BY MFR.

AIR SEPARATOR / EXPANSION TANK / BUFFER TANK SCHEDULE

AIR SEPARATOR				
SERVICE	HEATING LOOP	CHILLED WATER LOOP	DOMESTIC WATER	GEOTHERMAL WELLS
TAG	AS-1	AS-2	NA	AS-3
MFR-MODEL	TACO - 4903AD	TACO - 4903AD	NA	TACO - 4906AD
INLET/OUTLET	3"/3"	3"/3"	NA	6"/6"
STRAINER	YES	YES	NA	YES
SYSTEM FLUID	25% GLYCOL	25% GLYCOL	WATER	25% GLYCOL
BLADDER-TYPE EXPANSION TANK				
TAG	ET-1	ET-2	ET-3 (HOT WATER)	ET-4
MFR-MODEL	TACO CA 215-125	TACO CA 90-125	TACO PAX 84-150	TACO CA 500-125
TANK DIAMETER	20	20	16	24
TANK HEIGHT	58	30	41 3/4	85 3/4
ACCEPTANCE VOLUME	57	23	12	132
WATERLOGGED WEIGHT (LBS.)	765	312	330	1,520
ASME PRESSURE RATING	125	125	150	125
MAXIMUM OPERATING TEMPERATURE	125	70 F	140 F	100
BUFFER TANK				
TAG	BT-1	BT-2	BT-3 (BOOSTER PUMP COMP)	
MFR-MODEL	JOHN WOOD CO. JSTR-22-036	JOHN WOOD CO. JBTR-24-300	JOHN WOOD CO. JAPR-20-607	
TANK DIAMETER	30	44	16	
TANK HEIGHT	76 3/4	72	72 3/8	

DUCT HEATING COIL SCHEDULE

TAG	SERVES	AIRFLOW	LENGTH	HEIGHT	FACE VEL	EDB	LDB	MBH	MAX APD	GPM	EWT	LWT	MAX WPD	RUNOUT SIZE
HC-1	ERU-1	550	18	10	440	48	95	27.9	0.1"	5.2	120	100	7.2'	1"

ENERGY RECOVERY UNIT SCHEDULE

GENERAL	TAG	ERU-1
	SERVES	
	LOCATION	Mech Rm 004
	TYPE	FIXED-PLATE SENSIBLE
	MFR	RENEWAIRE
	MODEL	HE1XINH
FILTER SECTION	FILTERS	MERV 13
(TYP-2, SUPPLY & EXH)	MIN. AREA, sf	2.7
	VELOCITY	204
OUTSIDE AIR FAN	TYPE	ECM
	AIRFLOW, cfm	**550**
	ESP, in.wc.	1.25
	MOTOR SPEEDS	-
	HP	0.75
EXHAUST AIR FAN	TYPE	ECM
	AIRFLOW, cfm	**550**
	ESP, in.wc.	1.25
	MOTOR SPEEDS	-
	HP	0.75
OVERALL DIMENSIONS	LENGTH	49"
	WIDTH	22"
	HEIGHT	34"
	OPERATING WEIGHT, lbs.	275
HEAT RECOVERY CORE	SUMMER OA DB/WB	88 / 72
	WINTER OA DB	0
	SUMMER SA DB/WB	78.5 / 72.9
	WINTER SA DB	53.2
	SENSIBLE EFFECTIVENESS	95.0%
	SUMMER ENTHALPY EFF.	NA
	WINTER ENTHALPY EFF.	NA
	FROST CONTROL	SUPPLY BY PASS
HEATING	HOT WATER COIL (MBH)	NA
	EAT db	NA
	LAT db	NA
	EWT /LWT (F)	NA
	GPM / HD	NA
COOLING	CHILLED WATER COIL (TMBH)	NA
	EAT db/wb F	NA
	LAT db/wb F	NA
	GPM / HD	NA
ELECTRICAL DATA		
	V-PH-HZ	120/1/60
	UNIT FLA	9.0
	UNIT MCA	20.3
	MAX FUSE SIZE	25.0
	SUPPLY AND RETURN SMOKE DETECTORS	NO
NOTES:		
1. ERU MFR. SHALL...		

AHU SCHEDULE

GENERAL	UNIT NO.	AHU-1	AHU-2
	SERVICE	VISITOR'S SPACE	RESTROOM/LOBBY
	LOCATION	MECHANICAL	MECHANICAL
	MANUFACTURER	PACE	PACE
	MODEL	PAI-57X96	PAI-48X69
	TYPE	NOTE 1	NOTE 2
	WEIGHT (LBS)	10,046	5,745
ELECTRICAL	VOLTAGE	460-3-60	460-3-60
	FLA ENERGY WHEEL	2.2	2.2
	MCA ENERGY WHEEL	2.2	2.2
	MOP ENERGY WHEEL	2,3	2.3
	FLA SUPPLY FAN	18.26 X 2	4.0 X 1
	FLA EXHAUST FAN	6.35 X 2	4.0 X 1
	MCA (SINGLE POINT CONNECTION)	51.4	11.2
	MOP SINGLE POINT CONNECTION)	70.0	15.0
	LIGHTS AND OUTLETS MOP - 120/1 PHASE (SEPARATE CIRCUIT REQUIRED)	15.0	15.0
	VFD'S FURNISHED BY	DIV 23	DIV 23
	DISCONNECT SWITCHES FURN BY	DIV 23	DIV 23
	SMOKE DETECTOR (SD) FURN BY	DIV 26	DIV 26
	SD INSTALLED IN DUCT BY	DIV 23	DIV 23
	SD WIRED TO HVAC CONTROLS BY	DIV 23	DIV 23
	SD WIRED TO FIRE ALARM BY	DIV 26	DIV 26
SUPPLY FAN	TYPE	2 X D.D. PLENUM	1 X D.D. PLENUM
	SUPPLY AIRFLOW, CFM	**12,800**	**2,275**
	PEAK OUTSIDE AIRFLOW, cfm (C02 Demand)	8,350	2,275
	MIN OUTSIDE (BASE) AIRFLOW, cfm	1,300	2,275
	% OA	65.2%	100.0%
	ESP, in.wc.	2.0"	1.5"
	MAX-BHP		
	MOTOR HP	18 X 2	4
	STARTER OR VFD	VFD	VFD
EXHAUST FAN	TYPE	2 X D.D. PLENUM	1 X D.D. PLENUM
	EXHAUST AIRFLOW, CFM	**12,800**	**2,275**
	ESP, in.wc.	1.5"	1.0"
	MAX-BHP		
	MOTOR HP	8 X 2	4
	STARTER OR VFD	VFD	VFD
ENERGY RECOVERY	TYPE	WHEEL	WHEEL
	SUMMER OA DB/WB	88.3/74.4	88.3/74.4
	SUMMER TOTAL EFFECTIVENESS	61.0%	76.7%
	WINTER OA DB	-7.4	-7.4
	WINTER SA DB	41.3	40.4
	WINTER TOTAL EFFECTIVENESS	75.2%	86.6%
	FROST CONTROL	OA BYPASS	OA BYPASS
	EW OA BYPASS DAMPER	YES	YES
	RECIRCULATION AIR DAMPER	YES	YES
CHILLED WATER COIL	TYPE	CHILLED WATER	CHILLED WATER
	ENT. AIR, DB/WB	78.8/67.8	77.6/65.9
	LVG. AIR, DB/WB	54.7/54.4	50.9/50.9
	TMBTUH	557	99
	MAX AIR PD. in. wc.	1.06	0.22
	FACE AREA	27.8	10.9
	COIL FACE VELOCITY	460	209
	FLUID	25% PG	25% PG
	EWT, deg-F	42	42
	LWT, deg-F	57.1	57.1
	GPM	71.7	13.6
	MAX WATER PD, ft-H2O	16.2	7.4
HOT WATER COIL	TYPE	HOT WATER	HOT WATER
	EAT, deg-F.	41.3	50.1
	LAT, deg-F.	55.3	87.3
	TMBTUH	200	90
	MAX AIR PD. in. wc.	0.04	0.03
	FACE AREA, SF	27.7	10.9
	COIL FACE VELOCITY	462	209
	FLUID	25% PG	25% PG
	EWT, deg-F	120	120
	LWT, deg-F	100	100
	GPM	20.8	9.4
	MAX WATER PD, ft-H2O	2.0	2.8
FILTERS (SUPPLY)	TYPE	MERV-8 + 13	MERV-8 + 13
FILTERS (EXHAUST)	TYPE	MERV 8	MERV 8

NOTES:

1. VAV ENERGY RECOVERY UNIT WITH HYDRONIC HEATING & COOLING COILS, SUPPLY FAN, EXHAUST FAN, INTAKE, & EXHAUST AIR DAMPERS, ENERGY RECOVERY WHEEL, RECIRCULATION DAMPER, ECONOMIZER.

2. CAV AIR HANDLING UNIT WITH HYDRONIC HEATING & COOLING COILS, SUPPLY FAN, EXHAUST FAN, INTAKE, & EXHAUST AIR DAMPERS, ENERGY RECOVERY WHEEL, 100% OA.

3. UNITS SHALL BE FACTORY WIRED TO A SINGLE POINT CONNECTION FOR ALL MOTORS AND SEPARATE 110 VOLT CIRCUIT FOR LIGHTS AND RECEPTACLES.

4. UNITS SHALL INCLUDE FACTORY CONTROLLERS TO ACCEPT 0-10 V SIGNAL FROM BAS TO ENABLE FAN SPEED CONTROL FOR BOTH THE SUPPLY FAN ARRAYS AND THE RETURN FAN ARRAYS IN EACH UNIT..

HYDRONIC PIPE SIZE RUNOUT SCHEDULE

PIPE SIZE	MAX GPM
1/2"	1.0
3/4"	2.8
1"	6.0
1-1/4"	10.5
1-1/2"	17
2"	35
2-1/2"	65
3"	100
4"	210
5"	410
6"	700

Allied Engineering
Structural Mechanical Electrical Plumbing
160 Veranda Street
Portland, Maine 04103
P: 207.221.2260
F: 207.221.2266
Web:www.allied-eng.com

Allied Project No: 12069 | Cad File:

AECOM
1 FEDERAL STREET, 8TH FLOOR
BOSTON, MA 02110
617.723.1700
www.aecom.com

A1 | MECHNAICAL SCHEDULES
NONE

STATE OF MAINE
DEPARTMENT OF TRANSPORTATION

DATE

FED PIN NO: NA
WIN NO: 017163.02 & 017163.03

STATE OF MAINE
ANTHONY S. DAVIS
No. 8834
LICENSED PROFESSIONAL ENGINEER

SIGNATURE

P.E. NUMBER 8834

DATE January 17, 2022

PROJECT INFORMATION

PROGRAM	-
PROJECT MANAGER	-
DESIGNER	AECOM
CONSULTANT	ALLIED ENGINEERING
PROJECT RESIDENT	-
CONTRACTOR	-
PROJECT COMPLETION DATE	-

MAINE DEPARTMENT OF TRANSPORTATION
ACADIA GATEWAY FACILITY
INTERMODAL AND WELCOME CENTER

MECHANICAL SCHEDULES

SHEET NUMBER
MH600

Username: -
Division: -
Date: -
Filename: -

PUMP SCHEDULE

TAG	SYSTEM	LEAD/LAG	MFR.	MODEL	SUCT X DISCH	SUCTION DIFFUSER	TYPE	PUMPED FLUID	PERFORMANCE GPM	HEAD	RPM	NPSH	ELECTRICAL BHP	MOTOR HP	VOLTS/PH (60 Hz.)	ELECTRICAL COORDINATION VFD FURN. BY	STARTER FURN. BY	DISC. SWITCH FURN BY	NOTES
P-1	CHILLED WATER	YES	GRUNDFOS	20959-4P-7.5HP VLSE	2" x 2"	NO	VERT. INLINE-BASE MT	25% PG	125	80	1800	7.27	3.9	7.5	460/3	INTEGRAL	NA	26	1
P-2	CHILLED WATER	YES	GRUNDFOS	20959-4P-7.5HP VLSE	2" x 2"	NO	VERT. INLINE-BASE MT	25% PG	125	80	1800	7.27	3.9	7.5	460/3	INTEGRAL	NA	26	1
P-3	HEATING WATER	YES	GRUNDFOS	20705-4P-3HP VLSE	2" x 2"	NO	VERT. INLINE-BASE MT	25% PG	75	50	1800	3.59	1.51	3	460/3	INTEGRAL	NA	26	1
P-4	HEATING WATER	YES	GRUNDFOS	20705-4P-3HP VLSE	2" x 2"	NO	VERT. INLINE-BASE MT	25% PG	75	50	1800	3.59	1.51	3	460/3	INTEGRAL	NA	26	1
P-5	WELL PUMPS	YES	GRUNDFOS	30957-4P-7.5HP VLSE	3"x 3"	NO	VERT. INLINE-BASE MT	25% PG	200	70	1800	3.97	6.57	7.5	460/3	INTEGRAL	NA	26	1
P-6	WELL PUMPS	YES	GRUNDFOS	30957-4P-7.5HP VLSE	3"x 3"	NO	VERT. INLINE-BASE MT	25% PG	200	70	1800	3.97	6.57	7.5	460/3	INTEGRAL	NA	26	1
P-7	RADIANT ZONE #1 (RFM-1)	NO	GRUNDFOS	UPS 15-58 FC	1 1/2"x1 1/2"	NO	INLINE	25% PG	5.2	14	1750	--	--	87 W	115/1	NA	NA	26	
P-8	RADIANT ZONE 2 (RFM-2)	NO	GRUNDFOS	UPS 15-58 FC	1 1/2"x1 1/2"	NO	INLINE	25% PG	1.5	14	1750	--	--	87 W	115/1	NA	NA	26	
P-9	RADIANT ZONE #3 (RFM-3)	NO	GRUNDFOS	UPS 15-58 FC	1 1/2"x1 1/2"	NO	INLINE	25% PG	3.9	14	1750	--	--	87 W	115/1	NA	NA	26	
P-10	RADIANT ZONE #4A (RFM 4A)	NO	GRUNDFOS	UPS 26-99 FC	1 1/2"x1 1/2"	NO	INLINE	25% PG	8.4	15	1750	--	--	197 W	115/1	NA	NA	26	
P-11	RADIANT ZONE #4B (RFM 4B)	NO	GRUNDFOS	UPS 26-99 FC	1 1/2"x1 1/2"	NO	INLINE	25% PG	8.4	15	1750	--	--	197 W	115/1	NA	NA	26	

NOTES:
1) PROVIDE SUCTION DIFFUSER AND 30' OF STRAIGHT PIPE AT THE INLET OF THE PUMP..

HYDRONIC FAN COIL UNIT SCHEDULE

TAG	SERVES	CONFIG	TYPE	NOTES	MFR -MODEL	SIZE	SUPPLY CFM	ESP	CHILLED WATER COOLING TMBH	SMBH	EAT (DB)	EAT (WB)	LAT (DB)	EWT	LWT	GPM	MAX P.D. (FT WG)	HOT WATER HEATING TMBH	EAT	LAT	EWT	LWT	GPM	MAX P.D. (FT WG)	ELECTRICAL - PHYSICAL MOTOR TYPE	HP	ELEC	L	W	H	DRAIN
FC-1	STAIR 116	HORIZ CONCEAL	4-PIPE	1, 2	PRICE FCHG	20	400	0.38	7.0	4.5	75	66	64.6	42	54.4	1.10	1.03	5.0	68	79.3	120	109.4	0.9	0.14	ECM	1/3	115/1	42 3/8"	35"	13 1/2"	3/4"

NOTES
1. HOT WATER AND CHILLED WATER - PROVIDE 25% PROPYLENE GLYCOL.
2. PROVIDE MERV-8 AIR FILTERS.

RESULTS TAG	MFG	QTY	MODEL	SIZE	MAX CFM	MIN CFM	INLET SP IN WG	DIF PD IN WG	DOWN IN WG	ARRANGEMENT	HEAT HEAT CFM	EAT DEG F	LAT DEG F	CAPACITY...	COIL ROWS	WPD FT WG	HOT WATER HEAT (25% PG) EWT DEG F	LWT DEG F	COIL APD IN WG	WATER GPM	SOUND RAD NC	DIS NC	ATTEN METHOD	RAD SOUND POWER -... 125	250	500	1000	2000	4000	DIS SOUND POWER -... 125	250	500	1000	2000	4000
VAV 1-1	PRICE	1	SDV5	12	1300	650	1	0.24	0.25	LH Controls / LH Coil	900	55	84.7	29.0	2 (HC)	7.11	120	108.8	0.51	5.2	-	-	AHRI-885E	50	38	37	31	24	24	58	50	47	45	41	38
VAV 1-2	PRICE	1	SDV5	5	200	100	1	0.72	0.25	LH Controls / LH Coil	100	55	81.8	3.0	1	3.5	120	117.6	0.03	2.5	-	23	AHRI-885E	53	45	37	30	26	23	67	61	52	47	43	40
VAV 1-3	PRICE	1	SDV5	6	300	150	1	0.61	0.25	LH Controls / LH Coil	150	55	88.3	5.5	2	0.36	120	112.4	0.14	1.4	-	22	AHRI-885E	55	49	39	34	30	25	69	62	54	48	32	39
VAV 1-4	PRICE	1	SDV5	14	2050	1025	1	0.14	0.25	LH Controls / LH Coil	1400	55	84.6	45.0	2 (HC)	14.58	120	106.9	0.61	6.8	-	-	AHRI-885E	49	40	36	30	26	26	58	48	50	45	43	37
VAV 1-5	PRICE	1	SDV5	24 X 16	4130	2100	1	0.04	0.25	LH Controls / LH Coil	2500	55	86.4	85.0	2 (HC)	14.69	120	104	0.71	10.6	25	20	AHRI-885E	62	55	49	41	38	30	68	63	55	52	52	44
VAV 1-6	PRICE	1	SDV5	24 X 16	4100	2100	1	0.05	0.25	LH Controls / LH Coil	2500	55	86.4	85.0	2 (HC)	14.69	120	104	0.7	10.6	25	20	AHRI-885E	62	55	49	41	38	29	67	63	55	52	52	44
VAV-1-7	PRICE	1	SDV5	6	350	175	1	0.64	0.25	LH Controls / LH Coil	200	55	77.6	5.0	1 (HC)	4.09	120	116.3	0.11	2.7	25	20	AHRI-885E	57	51	41	36	31	26	71	65	56	50	44	40
VAV-1-8	PRICE	1	SDV5	5	170	100	1	0.73	0.25	LH Controls / LH Coil	100	55	70.9	1.8	1	0.06	120	106.8	0.02	0.3	-	20	AHRI-885E	51	43	35	28	24	22	64	59	50	45	42	39
VAV 1-9	PRICE	1	SDV5	5	200	100	1	0.68	0.25	LH Controls / LH Coil	170	55	82.2	5.1	2	0.13	120	107.3	0.07	0.8	-	23	AHRI-885E	53	45	37	29	26	23	66	61	52	47	43	40

* "-" signifies a NC value (radiated or discharge) that is less than 15
* Actual coil APD shown is at max airflow, not heating airflow.

REGISTERS - GRILLES - DIFFUSERS (RGD) SCHEDULE

TAG	PRICE MODEL	TYPE	NECK SIZE	FACE SIZE	CFM RANGE	MAX TOTAL P.D. (IN.W.C.)	MAX NC LEVEL	BORDER TYPE	BLOW	NOTES
S-1	SCD	SQ. CEILING SUPPLY DIFFUSER	6" DIA	24" X 24"	0-150	0.07"	16	LAY-IN	4-WAY	
S-2	SCD	SQ. CEILING SUPPLY DIFFUSER	8" DIA	24" X 24"	151-275	0.07"	19	LAY-IN	4-WAY	
S-3	SCD	SQ. CEILING SUPPLY DIFFUSER	10" DIA	24"X24"	276-500	0.07"	18	LAY-IN	4-WAY	
S-4	520D	STEEL DOUBLE DEFL. SUPPLY REGISTER	12" X 8"	14" X 10"	100-400	0.10"	25	SURFACE MT.	ADJUSTABLE	
S-5	520D	STEEL DOUBLE DEFL. SUPPLY REGISTER	12" X 10"	14" X 12"	401-620	0.10"	26	SURFACE MT.	ADJUSTABLE	
S-6	LV1	LINEAR VANE SUPPLY DIFFUSER W/ DIRECTIONAL VANES	4.5" x 59.5"	5" x 60"	200-450	0.03"	20	SURFACE MT.	ADJUSTABLE	
R-1	530	STEEL RETURN GRILLE, 3/4" SPACING, 45 DEG VANES	8" X 8"	10" X 10"	0-170	0.05"	23	SURFACE MT.	----------	
R-2	530	STEEL RETURN GRILLE, 3/4" SPACING, 45 DEG VANES	12" X 12"	14" X 14"	171-440	0.05"	27	SURFACE MT.	----------	
R-3	530	STEEL RETURN GRILLE, 3/4" SPACING, 45 DEG VANES	22" X 22"	24" X 24"	551-1000	0.02"	27	SURFACE MT.	----------	
R-4	530	STEEL RETURN GRILLE, 3/4" SPACING, 45 DEG VANES	46" X 22"	48" X 24"	941-2000	0.02"	31	SURFACE MT.	----------	
R-5	630	ALUM. RETURN GRILLE, 3/4" SPACING, 45 DEG VANES	8" X 8"	10" X 10"	0-170	0.05"	23	SURFACE MT.	----------	
R-6	630	ALUM. RETURN GRILLE, 3/4" SPACING, 45 DEG VANES	22" X 12"	24" X 14"	600-1000	0.03"	25	SURFACE MT.	----------	
R-7	510Z	STEEL RETURN GRILLE, 3/4" SPACING, 0 DEG VANES	34" X 10"	36" X 12"	1000 - 1300	0.05"	23	SURFACE MT.	----------	
R-8	82	1" x 1" x 1" ALUMINUM EGGCRATE FACE	24" x 24"	24" x 24"	1000 - 2000	0.02	--	LAY IN	----------	
R-9	20	STEEL RETURN GRILLE, 3/4" SPACING, 0 DEG VANES	46" X 22"	48" X 24"	2001-4380	0.02"	31	SURFACE MT.	----------	
NO...										

UNIT HEATER SCHEDULE

TAG	SERVES	MFR. -MODEL	SIZE	TYPE	EXPOSED FACE Height	EXPOSED FACE Width	EXPOSED DEPTH	MBH	CFM	EAT (DEG.-F)	LAT (DEG.-F)	GPM	FLUID	EWT	LWT	MOTOR HP	ELECT	RUNOUTS	MAX WPD	NOTES
UH-1	MECHANICAL 214	MODINE HCH	67	HORIZONTAL UH	22.5"	29"	19.7"	16.6	1150	60	98.0	6.7	WATER	120.0	100.0	1/6	120-1-60	1"	2.6	1
UH-2	RECV'G RM 121	MODINE HCH	67	HORIZONTAL UH	22.5"	29"	19.7"	16.6	1150	60	98.0	6.7	WATER	120.0	100.0	1/6	120-1-60	1"	2.6	1

NOTES:
1. POWER WIRING TO UNIT HEATER BY DIV 26. ALL LOW VOLTAGE CONTROL WIRING, THERMOSTAT, RELAYS, AND TRANFORMERS BY DIV. 23.

RADIANT FLOOR CIRCUIT SCHEDULE

MANIFOLD NO.	AREA SERVED	CIRCUIT NO.	LENGTH (ft) (Circuit + Tail)	FLOW RATE PER CIRCUIT (gpm)	MANIFOLD TOTAL (gpm)	HEAD LOSS (Ft of water)	SUPPLY TEMP (ºF)	DESIGN TEMP DROP (ºF)	TUBE SPACING (in)	TUBE SIZE
FM-1	TOILETS	1 THRU 8	290	0.65	5.20	3.40	101.9	20	12	5/8"
FM-2	LOBBY	1 THRU 4	275	0.38	1.50	1.20	91.3	20	12	5/8"
FM-3	OFFICE ROOMS	1 THRU 7	285	0.56	3.90	2.50	98.4	20	12	5/8"
FM-4A	OPEN AREA	1 THRU 14	300	0.60	8.40	2.70	97.4	20	12	5/8"
FM-4B	OPEN AREA	1 THRU 14	300	0.60	8.40	2.70	97.4	20	12	5/8"

NOTES:
1) Total estimated load = 235,600 BTU/HR.

LOUVER SCHEDULE

TAG	MAKE - MODEL	ASSOICATED AIR SYSTEM	INTAKE OR RELIEF?	CFM	DIMENSIONS HEIGHT (FT.)	WIDTH (FT.)	MIN. FREE AREA (SF)	% FREE AREA	BLADED EPTH	BEGINNING POINT OF WATER PENETRATION AT 0.01 OZ./SF	MAX P.D. MAX W.C.	SCREEN	NOTES
L-1	RUSKIN ELF6375DX (Triangular)	AHU-1, 2, ERU-1	INTAKE	15,625	13	16	52	50% Min.	6"	1000	0.03	BIRD	1
L-2	RUSKIN ELF6375DX (Triangular)	AHU-1, 2, ERU-1, EF-1	EXHAUST	15,775	13	16	52	50% Min.	6"	1000	0.03	BIRD	1

NOTES:
1. OVERALL TRIANGLE LOUVER BASE LENGTH.

FAN SCHEDULE

TAG	SERVES	MANUFACTURER-MODEL	TYPE	DRIVE	CFM	SP (IN. WC.)	MAX RPM	ELECTRICAL MAX BHP	MOTOR HP	STARTER FURN. BY	DISC. SWITCH FURN BY	VOLTS/PH	MAX SONES	WEIGHT (LBS.)	DAMPER	NOTES
EF1	BREAK 122	COOK- GN-320	IN-LINE DUCT	DIRECT	150	0.25		--	0.062	NA	DIV 26	120/1	20.0	30	BDD	

A1 | MECHNAICAL SCHEDULES
NONE

Allied Engineering
Structural Mechanical Electrical Plumbing
160 Veranda Street
Portland, Maine 04103
P: 207.221.2260
F: 207.221.2266
Web:www.allied-eng.com
Allied Project No: 12069 | Cad File:

AECOM
1 FEDERAL STREET, 8TH FLOOR
BOSTON, MA 02110
617.723.1700
www.aecom.com

STATE OF MAINE
DEPARTMENT OF TRANSPORTATION

DATE

FED PIN NO: NA
WIN NO: 017163.02 & 017163.03

STATE OF MAINE ANTHONY S. DAVIS No. 8834 LICENSED PROFESSIONAL ENGINEER

SIGNATURE

P.E. NUMBER 8834

DATE January 17, 2022

PROJECT INFORMATION
PROGRAM
PROJECT MANAGER
DESIGNER AECOM
CONSULTANT ALLIED ENGINEERING
PROJECT RE-SIDENT
CONTRACTOR
PROJECT COMPLETION DATE

MAINE DEPARTMENT OF TRANSPORTATION
ACADIA GATEWAY FACILITY
INTERMODAL AND WELCOME CENTER
MECHANICAL SCHEDULES

SHEET NUMBER
MH601

Username:
Division:
Date:
Filename:

SEC — INTRUSION DETECTION CONTROL PANEL

KP — KEYPAD INTRUSION DETECTION ANNUNCIATOR, MOUNT 48"AFF

MSP — MOTION SENSOR, PASSIVE INFRARED (PIR), WALL MOUNTED 96"AFF

MSP — MOTION SENSOR, PASSIVE INFRARED (PIR), CEILING MOUNTED

DA — DURESS ALARM SWITCH, MOUNT TO UNDERSIDE OF COUNTER, UNO

C — CAMERA

CA — CARD ACCESS ~ PROVIDE EMPTY RECESSED WALL MOUNTED DOUBLE GANG BOX 44" AFF WITH 1/2" CONDUIT. EXTERIOR BOXES SHALL BE WATERPROOF. FOR CARD ACCESS FOR OVERHEAD DOORS, PROVIDE AN ADDITIONAL 1/2" CONDUIT WITH PULL STRING FROM THE CARD READER (OR JUNCTION BOX NEXT TO THE CARD READER WHERE THERE ARE DOUBLE OVERHEAD DOORS) TO THE DOOR CONTROLLER.

L — DOOR LOCK ~ PROVIDE EMPTY 1/2" CONDUIT WITH PULL STRING IN DOOR FRAME, RUN FROM DOOR LOCK LOCATION IN FRAME TO DOOR LOCK POWER LOCATION.

D — DOOR LOCK POWER ~ PROVIDE 120 VOLT POWER AT DOOR LOCATION AS NOTED ON PLANS. CONFIRM LOCATIONS WHERE 120 VOLT IS REQUIRED TO ROUGH IN. POWER SUPPLIES BY OTHERS.

DOOR CONTACT

DC — MAGNETIC DOOR LOCK

DL — TRANSFORMER

T

NOTES:

1. DOOR HARDWARE BY DIV 8 U.N.O.
2. LOW VOLTAGE WIRING AND DEVICES BY DIV 8 UNLESS NOTED OTHERWISE.
3. FOR EACH TECHNOLOGY OUTLET, PROVIDE CONCEALED CONDUIT FROM EACH OUTLET BOX TO 6" ABOVE THE NEAREST ACCESSIBLE CORRIDOR CEILING THAT IS CONTIGUOUS TO THE NEAREST IT. ROOM, J-HOOK OR CABLE TRAY PATHWAY, UNO. IN ROOMS WITHOUT CEILINGS, CONDUIT SHALL BE RUN AT UNDERSIDE OF DECK TO 6" ABOVE THE NEAREST ACCESSIBLE CORRIDOR CEILING THAT IS CONTIGUOUS TO THE NEAREST IT ROOM, J-HOOK OR CABLE TRAY PATHWAY, UNO. CONDUIT PATHWAYS SHALL BE PROVIDED FOR ANY PORTIONS OF THE PATH TO NEAREST IT ROOM, J-HOOK, OR CABLE TRAY THAT HAS EXPOSED DECK OR HAS INACCESSIBLE CEILINGS.
4. DIVISION 26 SHALL PROVIDE 120 VOLT POWER WHERE INDICATED. DIV 26 SHALL PROVIDE EMPTY BOXES AND CONDUITS WITH PULL STRING U.N.O.
5. DIV 27 SHALL PROVIDE CATEGORY 6 DATA OUTLETS AND DATA CABLING

E1 SECURITY SYSTEM

NO SCALE

FACP — FIRE ALARM CONTROL PANEL, MOUNT WITH TOP OF PANEL NOT MORE THAN 72"AFF

FAA — FIRE ALARM ANNUNCIATOR, MOUNT WITH TOP OF PANEL NOT MORE THAN 72"AFF

S — SMOKE DETECTOR

S_E — SMOKE DETECTOR, "E" INDICATES CONNECTION FOR ELEVATOR RECALL

H — HEAT DETECTOR

D — DUCT SMOKE DETECTOR

RTS — REMOTE TEST/INDICATOR FOR DUCT SMOKES, MOUNT ON CEILING BENEATH UNIT, OR WALL MOUNT WHERE INDICATED ON PLANS

F — MANUAL PULL STATION, MOUNT 48" AFF

30 S — SPEAKER/STROBE, CANDELA AS NOTED ON PLANS

15 P — STROBE ONLY INDICATING APPLIANCE, CANDELA AS NOTED ON PLANS

30 S F — SPEAKER/STROBE WITH PULL STATION DIRECTLY BELOW

DH — MAGNETIC DOOR HOLD OPEN DEVICE

T — TRANSFORMER

F — SPRINKLER SYSTEM WATER FLOW SWITCH, PROVIDED UNDER DIVISION 23, WIRED UNDER DIVISION 26

T — SPRINKLER SYSTEM TAMPER SWITCH, PROVIDED UNDER DIVISION 23, WIRED UNDER DIVISION 26

C — SPRINKLER SYSTEM CHECK VALVE PRESSURE SWITCH, FURNISHED AND INSTALLED UNDER DIVISION 23, WIRED UNDER DIVISION 26

P — SPRINKLER SYSTEM EXCESS PRESSURE PUMP, FURNISHED AND INSTALLED UNDER DIVISION 23, WIRED UNDER DIVISION 26

K — KNOX BOX, MOUNT 60" AFF

MM — FIRE ALARM ADDRESSABLE MONITOR MODULAR

E3 FIRE ALARM SYSTEM

NO SCALE

PANELBOARD ~ SURFACE MOUNTED

PANELBOARD ~ FLUSH MOUNTED

FUSED DISCONNECT SWITCH

NON-FUSED DISCONNECT SWITCH

MOTOR STARTER

COMBINATION MOTOR STARTER/FUSED DISCONNECT

MOTOR

METER AND CABINET

M — JUNCTION BOX ~ CEILING MOUNTED

J — JUNCTION BOX ~ WALL MOUNTED

J — JUNCTION BOX FOR OR CLOCK POWER

C — TRANSFORMER ~ NUMBER INDICATES DESIGNATION SEE TRANSFORMER SCHEDULE

T# — VARIABLE FREQUENCY DRIVE

VFD — TRANSIENT VOLTAGE SURGE SUPPRESSOR

TVSS — EMERGENCY SHUTOFF SWITCH ~ WALL MOUNTED 48" TO CENTERLINE ~ PROVIDE TAMPER-PROOF COVER

E — CONDUIT TURNING UP

CONDUIT TURNING DOWN

WIRING UNDERGROUND OR UNDERSLAB

HOMERUN ~ (2)#12+(1)#12G UNO (EXCEPT COMPUTER AND LIGHTING CIRCUITS: (1)#12+(1)#10N+(1)#12G UNO)

SINGLE-PHASE HOMERUN OR MULTIPLE HOMERUN UTILIZING THE SAME CONDUIT

3-PHASE HOMERUN OR MULTIPLE HOMERUN UTILIZING THE SAME CONDUIT

INDICATES 20A,1P LOCKING CIRCUIT BREAKER

FLEXIBLE CONNECTION

L~20A,1P — GROUNDING SYSTEM

MOTORIZED DOOR OPERATOR AND PUSH PADDLE ~ FURNISHED BY DIVISION 08, WIRED BY DIVISION 26

P — DOORBELL PUSHBUTTON

DOORBELL CHIME

C — JUNCTION BOX FOR HAND DRYER POWER WITH (2)#10 +(1)#10G BRANCH CIRCUIT ~ 44" AFF U.N.O. (COORDINATE MOUNTING HEIGHTS WITH ARCHITECTURAL ELEVATIONS)

H — MECHANICAL EQUIPMENT TAD - REFER TO ELECTRICAL SCHEDULE OF MECHANICAL EQUIPMENT.

C5 POWER DISTRIBUTION

NO SCALE

LIGHT FIXTURE, RECESSED TROFFER, TYPICAL

RECESSED DOWNLIGHT

RECESSED ADJUSTABLE DOWNLIGHT

WALL MOUNTED LIGHT FIXTURE

CEILING SURFACE MOUNTED LIGHT FIXTURE

PENDANT MOUNTED LIGHT FIXTURE

CONTINUOUS RECESSED LIGHT FIXTURE, GRID MOUNTED IN PUBLIC TOILET ROOMS

WALL MOUNTED STAIRWAY LIGHT FIXTURE

WALL MOUNTED DISPLAY LIGHT

L5 — CONTINUOUS SURFACE MOUNTED LIGHT FIXTURE

NOTE TYPICAL FOR ALL LUMINAIRES:

F1 a # — INDICATES LIGHT FIXTURE TYPE ON LUMINAIRE SCHEDULE; LOWER CASE LETTER INDICATES SWITCHING; NUMBER INDICATES CIRCUITING

F6 LUMINAIRES

NO SCALE

DUPLEX RECEPTACLE ~ 20A, 125V, 2P, 3W, NEMA 5-20R

DOUBLE DUPLEX RECEPTACLE

HATCH INDICATES RECEPTACLE CONNECTED TO GENERATOR, TYPICAL

F — DUPLEX RECEPTACLE, FLOOR BOX

GFCI DUPLEX RECEPTACLE, MOUNT 44" AFF UNO

GFCI DOUBLE DUPLEX RECEPTACLE, MOUNT 44" AFF UNO

WP — GFCI RECEPTACLE WITH WEATHERPROOF COVER

WP — GFCI RECEPTACLE IN WP ENCLOSURE ON ROOF

NOTES:

1. MOUNT RECEPTACLES WITH CENTERLINE 18"AFF UNO
2. MOUNT EXTERIOR RECEPTACLES WITH CENTERLINE 24"AFG UNO
3. 'U' = (2) USB

D5 RECEPTACLES

NO SCALE

TAG	NEMA	DESCRIPTION (SINGLE DEVICE)	OCPD	BRANCH CIRCUIT
A	5-15R	15A-125V,2P,3W	15A-1P	2#12 & 1#12GND - 3/4" C
A1	5-15R	15A-125V,2P,3W GFCI	15A-1P	2#12 & 1#12GND - 3/4" C
B	5-20R	20A-125V,2P,3W	20A-1P	2#12 & 1#12GND - 3/4" C
B1	5-20R	20A-125V,2P,3W GFCI	20A-1P	2#12 & 1#12GND - 3/4" C
C	5-30R	30A-125V,2P,3W	30A-1P	2#10 & 1#10GND - 3/4" C
D	5-50R	50A-125V,2P,3W	50A-1P	2#6 & 1#10GND - 3/4" C
E	6-15R	15A-250V,2P,3W	15A-2P	2#12 & 1#12GND - 3/4" C
F	6-20R	20A-250V,2P,3W	20A-2P	2#12 & 1#12GND - 3/4" C
G	6-30R	30A-250V,2P,3W	30A-2P	2#10 & 1#10GND - 3/4" C
H	6-50R	50A-250V,2P,3W	50A-2P	2#6 & 1#10GND - 3/4" C
I	14-20R	20A-125/250V,3P,4W	20A-2P	3#12 & 1#12GND - 3/4" C
J	14-30R	30A-125/250V,3P,4W	30A-2P	2#10 & 1#10GND - 3/4" C
K	14-50R	50A-125/250V,3P,4W	50A-2P	3#6 & 1#10GND - 1" C
L	14-60R	60A-125/250V,3P,4W	60A-2P	3#6 & 1#10GND - 1" C
M	15-20R	20A-250V,3PH,3P,4W	20A-3P	3#12 & 1#12GND - 3/4" C
N	15-30R	30A-250V,3PH,3P,4W	30A-3P	3#10 & 1#10GND - 3/4" C
P	15-50R	50A-250V,3PH,3P,4W	50A-3P	3#6 & 1#10GND - 1" C
Q	L5-15R	15A-125V,2P,3W, TWIST LOCK	15A-1P	2#12 & 1#12GND - 3/4" C
R	L5-20R	20A-125V,2P,3W, TWIST LOCK	20A-1P	2#12 & 1#12GND - 3/4" C
S	L5-30R	30A-125V,2P,3W, TWIST LOCK	30A-1P	2#10 & 1#10GND - 3/4" C
T	L6-15R	15A-250V,2P,3W, TWIST LOCK	15A-2P	2#12 & 1#12GND - 3/4" C
U	L6-20R	20A-250V,2P,3W, TWIST LOCK	20A-2P	2#12 & 1#12GND - 3/4" C
V	L6-30R	30A-250V,2P,3W, TWIST LOCK	30A-2P	2#10 & 1#10GND - 3/4" C
W	L14-20R	20A -125/250V,3P,4W,TWIST LOCK	20A-2P	3#12 & 1#12GND - 3/4" C
X	L15-20R	20A -250V,3P,4W,TWIST LOCK	20A-3P	4#12 & 1#12GND - 3/4" C
Y	UNKNOWN PLUG NEMA CONFIGURATION FOR EQUIPMENT. CONFIRM REQUIREMENTS IN FIELD. PROVIDE REQUIRED RECEPTACLE, WIRING AND CIRCUIT BREAKER			

D1 ABBREVIATIONS

AFF	ABOVE FINISHED FLOOR	WG	WIREGUARD
AFG	ABOVE FINISHED GRADE	WP	WEATHERPROOF
BAS	BUILDING AUTOMATION SYSTEM	UNO	UNLESS NOTED OTHERWISE
BKBD	BACKBOARD	VEND	VENDING MACHINE
CATV	CABLE TV	XFMR	TRANSFORMER
CB	CIRCUIT BREAKER	(E)	EXISTING ITEM TO REMAIN
DISC	DISCONNECT	(R)	REMOVE ITEM AND DISPOSE OF PROPERLY
TEL	TELEPHONE	(ER)	RELOCATED ITEM AT NEW LOCATION
MICRO	MICROWAVE OVEN	(RL)	REMOVE AND RELOCATE
MT	MOUNT		
NEC	NATIONAL ELECTRICAL CODE		
P/O	PART OF		
REF	REFRIGERATOR		

C3 EMERGENCY LIGHTING

NO SCALE

HATCHING INDICATES FIXTURE ON LIFE SAFETY BRANCH EMERGENCY POWER, UNO. "EM' INDICATES EMERGENCY WHERE THE HATCHING IS UNCLEAR. PROVIDE UL924 EMERGENCY BYPASS RELAY TO FORCE EMERGENCY LIGHTING ON UPON ACTIVATION OF FIRE ALARM OR LOSS OF NORMAL POWER. (1) RELAY IS REQUIRED PER EACH SWITCH GROUP OF LIGHTS. IF MULTIPLE SWITCH GROUPS IN A ROOM, MULTIPLE RELAYS ARE NEEDED.

— EXIT SIGN, CEILING MOUNTED, SHADING INDICATES FACE(S), ARROWHEAD INDICATES CHEVRON(S) REQUIRED, NUMBER INDICATES CIRCUIT NUMBER, TYPICAL

— EXIT SIGN, WALL MOUNTED, SHADING INDICATES FACE(S), MOUNT AT 7'-6" AFF OR OVER DOOR, NUMBER INDICATES CIRCUIT NUMBER, TYPICAL

EM — "EM" INDICATES FIXTURE ON LIFE SAFETY BRANCH EMERGENCY POWER

EMERGENCY LIGHTING UNIT

C5 POWER DISTRIBUTION

NO SCALE

W — WALL MOUNTED SPEAKERS (7'-0" AFF, U.N.O.)

P — PENDANT SPEAKERS (10'-0" AFF, U.N.O.)

C — RECESSED FLUSH SPEAKER

PA — ADMIN PHONE AND PAGING

WP SP — OUTDOOR SPEAKER

IC — INTERCOM CALL BUTTON/SPEAKER, WEATHERPROOF (48" AFG, U.N.O.)

B8 PA/MUSIC SYSTEM

NO SCALE

1. BRANCH CIRCUIT WIRING NOT SHOWN. WIRE AND CONNECT ELECTRICAL ITEMS TO CIRCUITS INDICATED.

2. DO NOT SCALE THE DRAWINGS. REFER TO ARCHITECTURAL DRAWINGS FOR EXACT DIMENSIONS.

3. THE LOCATION OF EQUIPMENT, OUTLETS, ETC. AS GIVEN ON THE DRAWINGS, IS APPROXIMATE. IT SHALL BE UNDERSTOOD THAT THESE LOCATIONS ARE SUBJECT TO MODIFICATION AS MAY BE FOUND NECESSARY OR DESIRABLE AT THE TIME OF INSTALLATION IN ORDER TO MEET STRUCTURAL/ARCHITECTURAL REQUIREMENTS. SUCH CHANGES SHALL BE MADE WITHOUT EXTRA CHARGE.

4. ELECTRICAL DEVICES, WHEN INSTALLED, SHALL BE PROTECTED FROM DAMAGE DURING CONSTRUCTION. COVER PLATES SHALL BE INSTALLED AFTER FINISH MATERIALS HAVE BEEN APPLIED.

5. COORDINATE WORK WITH OTHER DIVISIONS. VERIFY EXACT POWER REQUIREMENTS OF MECHANICAL EQUIPMENT WITH DIVISION 23. POWER WIRING FOR EQUIPMENT & CONTROL SHALL BE PERFORMED BY DIVISION 26. CONTROL WIRING BY DIVISION 23.

6. THE GENERAL DESIGN INTENT IS MINIMIZE, TO THE EXTENT POSSIBLE, EXPOSED CONDUITS ON BUILDING STRUCTURAL MEMBERS. IN AREAS WITH EXPOSED STRUCTURE CEILING, CONDUITS SHALL BE CONCEALED WITHIN WALLS AND BENEATH FLOOR SLAB EXCEPT WHERE THOSE CONDUITS SERVE CEILING MOUNTED ITEMS. FOR CEILING MOUNTED ITEMS, WIRING METHODS SHALL BE CONCEALED WITHIN WOOD CEILING SYSTEM.

B8 GENERAL NOTES

NOTE

SYMBOLS AND ABBREVIATIONS SHOWN ON THIS SHEET ARE FOR REFERENCE ONLY AND DO NOT INDICATE THEIR INCORPORATION INTO THE DESIGN

TECHNOLOGY MATRIX

CONDUIT NOTES:

1. THE GENERAL DESIGN INTENT IS MINIMIZE, TO THE EXTENT POSSIBLE, EXPOSED CONDUITS ON BUILDING STRUCTURAL MEMBERS.

2. IN AREAS WITH ACCESSIBLE CEILINGS, CONDUIT SHALL BE ROUTED FROM OUTLET BOX TO 6 INCHES ABOVE NEAREST ACCESSIBLE CEILING THAT IS CONTIGUOUS TO A CONDUIT PATHWAY DOWN TO TEL/COM ROOM, THEN 'J' HOOKS FROM WORKSTATION CONDUIT END TO PATHWAY DOWN TO TEL/COM ROOM.

3. IN AREAS WITH EXPOSED STRUCTURE CEILING, CONDUIT SHALL BE ROUTED FROM OUTLET BOX BENEATH FLOOR SLAB TO BASEMENT LEVEL. COORDINATE UNDER-SLAB CONDUIT INSTALLATION WITH RADIANT FLOOR HEATING.

4. TECHNOLOGY WORK, INCLUDING BUT NOT LIMITED TO: OUTLETS, BOXES, CONDUIT, AND CABLE TRAYS SHALL COMPLY WITH THE STATE OF MAINE TELECOMMUNICATIONS FACILITIES AND WIRING SPECIFICATIONS.

SYMBOL	MTG HT AFF UNO	DESCRIPTION	CONDUIT	BOX TYPE: SINGLE GANG BOX	BOX TYPE: DOUBLE GANG BOX	BOX TYPE: FLUSH COVERPLATE UNDERFLOOR BOX	OUTLET TYPE: CATEGORY 6 VOICE OUTLET	OUTLET TYPE: CATEGORY 6 DATA OUTLET	OUTLET TYPE: RJ-45 WITH SS WALL PHONE PLATE	CABLING: 4 PAIR UTP CABLING- CATEGORY 6 UNO	CABLING:
V	18"	VOICE AND DATA OUTLETS	1"	X			1	2		2	
2 V	18"	VOICE AND DATA OUTLETS	1"	X			1	3		3	
V	18"	DATA OUTLETS	1"	X				1		1	
W V	45"	WALL PHONE OUTLET	1"						1	1	
WA	ABOVE CLG	DATA OUTLET FOR WIRELESS ACCESS POINT		X				1		1	
V F	FLOOR FLUSH	VOICE AND DATA OUTLETS IN FLOOR BOX	1"			X	1	2		2	
C	VARIES	CAMERA - BOX, CABLING, AND CONDUIT TO CCTV HEAD-END IN TELECOM 007 (CAMERA BY OTHERS)	1"	X				1		1	

A1 TECHNOLOGY MATRIX

NO SCALE

F — DUPLEX RECEPTACLE, 20A, 125V, 2P, 3W, NEMA 5-20R, MOUNT IN FLUSH FLOOR BOX

F — DOUBLE DUPLEX RECEPTACLE, 20A, 125V, 2P, 3W, NEMA 5-20R, MOUNT IN FLUSH FLOOR BOX

F J — JUNCTION BOX, MOUNT IN FLUSH FLOOR BOX

F E — EMPTY FLUSH FLOOR BOX

F A — FLUSH FLOOR BOX WITH POWER AND DATA FOR TOUCH SCREEN INFO STATION

P — DUPLEX RECEPTACLE, PEDESTAL MOUNTED

P — SINGLE RECEPTACLE, PEDESTAL MOUNTED

P J — JUNCTION BOX, PEDESTAL MOUNTED

C — DUPLEX RECEPTACLE, FLUSH MOUNTED IN CEILING

C — DOUBLE DUPLEX RECEPTACLE, FLUSH MOUNTED IN CEILING

C — DUPLEX GFCI RECEPTACLE, FLUSH MOUNTED IN CEILING

C — DOUBLE DUPLEX GFCI RECEPTACLE, FLUSH MOUNTED IN CEILING

C D — DATA OUTLET, FLUSH MOUNTED IN CEILING, SEE SCHEDULE FOR TYPE

C J — JUNCTION BOX, FLUSH MOUNTED IN CEILING

OVERHEAD RECEPTACLE DROP, DUPLEX

OVERHEAD RECEPTACLE DROP, DOUBLE DUPLEX

OVERHEAD RECEPTACLE DROP, GFCI

OVERHEAD DATA DROP

D

A4 FLOOR AND CEILING DEVICES

NO SCALE

~ CENTERLINE 48" AFF, UNO ~

$a — LIGHT SWITCH, 20A,125/277V, LETTER INDICATES SWITCHING

$3 — THREE-WAY LIGHT SWITCH

$4 — FOUR-WAY LIGHT SWITCH

$2 — TWO-POLE SWITCH

$K — KEY OPERATED SWITCH

$M — MOTOR RATED SWITCH

$P — SINGLE POLE SWITCH WITH RED PILOT LIGHT ~ RED LIGHT SHALL GLOW WHEN CIRCUIT IS ENERGIZED

$a b — MULTI-GANGED SWITCHES, GANG UNDER ONE PLATE, LETTER INDICATES SWITCHING

$OS — OCCUPANCY SENSOR SWITCH, WALL MOUNTED

$OS2 — 2-BUTTON OCCUPANCY SENSOR SWITCH

OS — OCCUPANCY SENSOR, CEILING MOUNTED

OS — OCCUPANCY SENSOR, WALL MOUNTED

$D — DIMMER SWITCH, COORDINATE CONTROL TYPE WITH LOAD TO BE DIMMED

$F — HANDICAP SWITCHES FOR HOOD LIGHT AND FAN

$L — TIMER SWITCH, 60 MINUTES

$T — LIGHTING TIME CLOCK

LTC — LIGHTING CONTACTOR

LC — LIGHTING CONTROL PANEL

LCP — PHOTOCELL ~ CONNECTED TO NETWORK LIGHTING CONTROLS

PC — LOW VOLTAGE MOMENTARY SWITCH CONNECTED TO LIGHTING CONTROLS ~ LETTER INDICATES SWITCHING

$LVa

A6 LIGHT SWITCHES

NO SCALE

Allied Engineering
Structural Mechanical Electrical Plumbing
160 Veranda Street
Portland, Maine 04103
P: 207.221.2260
F: 207.221.2266
Web:www.allied-eng.com

Allied Project No: 12069 | Cad File:

AECOM
1 FEDERAL STREET, 8TH FLOOR
BOSTON, MA 02110
617.723.1700
www.aecom.com

STATE OF MAINE
DEPARTMENT OF TRANSPORTATION

DATE

FED PIN NO: NA

WIN NO: 017163.02 & 017163.03

STATE OF MAINE — CATHERINE A. FAUCHER No. 7575 — LICENSED PROFESSIONAL ENGINEER

SIGNATURE

P.E. NUMBER 7575

DATE January 17, 2022

PROJECT INFORMATION

PROGRAM

PROJECT MANAGER

DESIGNER — AECOM

CONSULTANT — ALLIED ENGINEERING

PROJECT RESIDENT

CONTRACTOR

PROJECT COMPLETION DATE

MAINE DEPARTMENT OF TRANSPORTATION
ACADIA GATEWAY FACILITY
INTERMODAL AND WELCOME CENTER

Electrical Abbreviations, Legends & General Notes

SHEET NUMBER

E000

Filename: Division: Date: Username:

1. -(1) 1" CONDUIT WITH (2) #6+(1) #6G - LIGHTING
2. -(1) 1" CONDUIT WITH CATEGORY 6 DATA CABLING TO EV CHARGING BUILDING DATA CABINET FOR CAMERA- PROVIDE (1) CATEGORY 6 CABLE FOR EACH CAMERA.
3. -(1) 1" CONDUIT WITH CATEGORY 6 DATA CABLING TO CCTV HEAD END IN TELCOM 007 FOR CAMERAS
4. -(1) 1" CONDUIT WITH (2) #10+(1) #10G FOR POWER and (2) #10, 1 #10G FOR NORMAL LIGHTING;
   (1) 1" CONDUIT WITH (4) CATEGORY 6 DATA CABLES TO DATA HEAD END IN TELCOM 007- (1) CABLE FOR WIRELESS ACCESS POINT AND (3) CABLES FOR EACH OF 3 SIGNS;
   -(1) 1" CONDUIT WITH CATEGORY 6 DATA CABLING TO CCTV HEAD END IN TELCOM 007 FOR CAMERA
5. -POWER (SEE ELECTRICAL SCHEDULE OF MECHANICAL EQUIPMENT FOR FEEDER SIZE);
   -(1) 1"CONDUIT EMPTY WITH PULLSTRING FOR CONTROLS
6. -CONDUIT FOR POWER TO ATS (SEE POWER RISER DIAGRAM FOR WIRING);
   -CONDUIT FOR POWER TO FIRE PUMP (SEE POWER RISER DIAGRAM FOR WIRING);
   -(1) 1" CONDUIT WITH (4) #12+(2) #12G FOR JACKET WATER HEATER CIRCUIT AND BATTERY CHARGER CIRCUIT (REFER TO PANEL PS SCHEDULE);
   -(1) 1" CONDUIT WITH CONTROL WIRING TO EACH ATS;
   -(1) 1" C FOR CABLING TO GENERATOR ANNUNCIATOR PANEL;
   -(1) 1" CONDUIT WITH WIRING TO GENERATOR REMOTE EMERGENCY STOP BUTTON
7. -CONDUIT FOR POWER (SEE ELECTRICAL SCHEDULE OF MECHANICAL EQUIPMENT FOR FEEDER SIZE);
   -(1) 1" CONDUIT WITH PULLSTRING FOR CONTROL WIRING
8. -2"C POWER (SEE ELECTRICAL SCHEDULE OF MECHANICAL EQUIPMENT FOR FEEDER SIZE);
   -(1) 1" C FOR CONTROL WIRING
9. -(1) 4"C TELEPHONE;
   -(1) 4"C CATV;
   -(1) 4"C SPARE
10. -(3) 4"C WITH PULLSTRING TO TEL/DATA ROOM BACKBOARD AND CAP FOR FUTURE USE;
    -(2) 4"C WITH PULLSTRING TO MAIN ELECTRIC ROOM AND CAP FOR FUTURE USE;
    -TERMINATE THESE CONDUITS FOR FUTURE BUILDING IN IN-GROUND BOX
11. -(2) 5"C PRIMARY;
    -(1) 4" C TELEPHONE;
    -(1) 4" C CATV;
    -(1) 4" C SPARE
12. -(2) 5" C PRIMARY
13. -(2) 4"C WITH PULLSTRING TO MAIN ELECTRIC ROOM AND CAP FOR FUTURE USE (TERMINATE THESE CONDUITS FOR FUTURE BUILDING IN IN-GROUND BOX)
14. -(1) 1" CONDUIT WITH (2)#10+(1)#10G - LIGHTING
15. -CONDUITS FOR POWER TO FIRE PUMP AND MDPH (SEE POWER RISER DIAGRAM FOR WIRING)
16. -(3) 4"C WITH PULLSTRING TO TELCOM 007 BACKBOARD AND CAP FOR FUTURE USE
17. -EV CHARGING POWER AND DATA DISTRIBUTION (SEE POWER RISER DIAGRAM)
18. -(1) 1" CONDUIT WITH WIRING TO TELCOM 007 PA SYSTEM HEAD END FOR PA SYSTEM SPEAKER.
19. -(1) 2" CONDUIT WITH 12 STRAND FIBER BACKBONE FROM EV CHARGING BUILDING DATA CABINET TO TELCOM 007 DATA NETWORK HEAD END.
20. GEOTHERMAL VAULT:
    -(1) 1" CONDUIT WITH (2) #8, (1) #8G- LIGHTING AND POWER;
    -(1) 1" CONDUIT EMPTY WITH PULLSTRING- CONTROLS
21. -(1) 1" CONDUIT WITH (2)#10+(1)#10G - EMERGENCY LIGHTING
22. -(1) 1" CONDUIT WITH (2)#10+(1)#10G - BUILDING SIGN LIGHTING

NOTE:
PROVIDE PULLSTRINGS IN ALL EMPTY OR SPARE CONDUITS

F1 WIRING & CONDUIT KEY

PERTAINS TO SHEETS ES100, ES101, & ES102

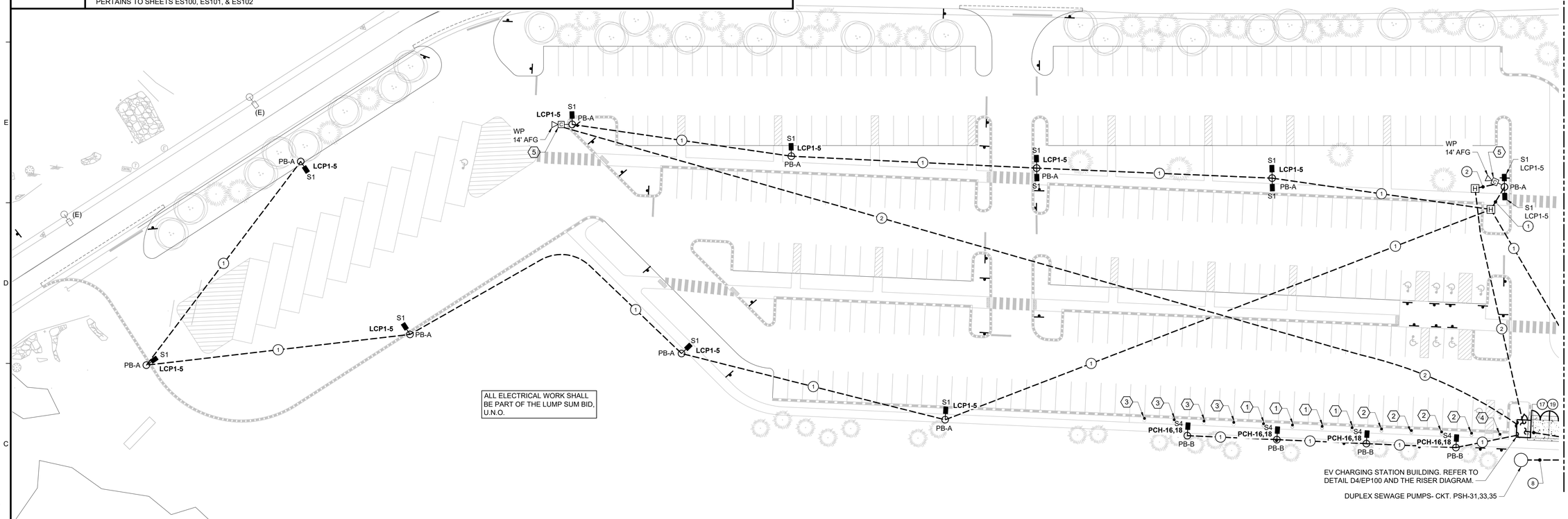

C1 SITE PART PLAN EAST

1"=30'-0"

- UNDERGROUND OR UNDERSLAB WIRING
- UTILITY POLE
- FUSED DISCONNECT SWITCH
- NON-FUSED DISCONNECT SWITCH
- MOTOR
- GROUNDING SYSTEM
- JUNCTION BOX, WALL MOUNTED
- JUNCTION BOX, IN-GROUND
- ELECTRICAL MANHOLE PER UTILITY COMPANY SPECIFICATIONS, COORDINATE LOCATION WITH OTHER UNDERGROUND UTILITIES
- PT — PADMOUNT TRANSFORMER, PROVIDE TRANSFORMER PAD PER UTILITY COMPANY SPECIFICATIONS
- PB — 4'X6' PULL BOX WITH 32" COVER PLATE IN ACCORDANCE WITH UTILITY STANDARDS
- H — HANDHOLE, MINIMUM 18"x36"x24", SIZE PER NEC FOR SIZE AND NUMBER OF CONDUITS INSTALLED
- M — METER & ENCLOSURE, PEDESTAL MOUNTED PER UTILITY COMPANY SPECIFICATIONS
- PB-# / S# / LCP1-# — INDICATES LUMINAIRE TYPE ON SCHEDULE INDICATES POLE BASE TYPE ~ SEE DETAILS ON ES101
- SINGLE POLE MOUNTED LIGHT
- INDICATES LIGHTING CONTROL PANEL RELAY NUMBERS
- SINGLE POLE HOMERUN: CONNECT TO PANEL INDICATED
- SINGLE-PHASE HOMERUN OR MULTIPLE HOMERUN UTILIZING THE SAME CONDUIT, CONNECT TO PANEL INDICATED
- 3-PHASE HOMERUN OR MULTIPLE HOMERUN UTILIZING THE SAME CONDUIT, CONNECT TO PANEL INDICATED
- C — SECURITY CAMERA- WP INDICATES WEATHERPROOF ENCLOSURE

A1 ELECTRICAL LEGEND

1. LEVEL 2 DUAL EV CHARGERS: PROVIDE FLUSH WEATHERPROOF IN GROUND 2 GANG JUNCTION BOX WITH BARRIER FOR SEPARATE POWER AND DATA CONNECTIONS. BOX LOCATION AT CHARGER TO BE VERIFIED IN FIELD PRIOR TO ROUGH IN. WIRE AND CONNECT TO PANEL PCH. EACH OF THE TWO CHARGERS SHALL BE WIRED TO (1) 50 AMP, 2 POLE BREAKER. PROVIDE 2 SETS OF (3) #6, 1 #8G- IN (1) SHARED 2" UNDERGROUND CONDUIT. CHARGERS FURNISHED BY OWNER AND INSTALLED/WIRED BY DIV 26. PROVIDE 1" UNDERGROUND CONDUIT WITH (2) CATEGORY 6 CABLES (EACH CONNECTED TO ONE CHARGER) WIRED TO THE EV CHARGING BUILDING DATA CABINET.
2. LEVEL 3 DUAL EV CHARGERS: PROVIDE FLUSH WEATHERPROOF IN GROUND 2 GANG JUNCTION BOX WITH BARRIER FOR SEPARATE POWER AND DATA CONNECTIONS. BOX LOCATION AT CHARGER TO BE VERIFIED IN FIELD PRIOR TO ROUGH IN. WIRE AND CONNECT TO PANEL HPCH. EACH OF THE TWO CHARGERS SHALL BE WIRED TO (1) 100 AMP, 3 POLE BREAKER. PROVIDE 2 SETS OF (4) #1/0, 1 #4G IN (1) SHARED 3" UNDERGROUND CONDUIT. CHARGERS FURNISHED BY OWNER AND INSTALLED/WIRED BY DIV 26. PROVIDE 1" UNDERGROUND CONDUIT WITH (2) CATEGORY 6 CABLES (EACH CONNECTED TO ONE CHARGER) WIRED TO THE EV CHARGING BUILDING DATA CABINET.
3. ROUGH IN FOR FUTURE CHARGERS: PROVIDE EMPTY FLUSH WEATHERPROOF IN GROUND 2 GANG JUNCTION BOX WITH BARRIER FOR SEPARATE POWER AND DATA CONNECTIONS. BOX LOCATION AT CHARGER TO BE VERIFIED IN FIELD PRIOR TO ROUGH IN. PROVIDE (1) 3" UNDERGROUND CONDUIT WITH PULL STRING FROM FUTURE CHARGER LOCATION POWER SIDE OF THE JUNCTION BOX TO ELECTRICAL PANEL HPCH/HPCH1 LOCATION. STUB UP 24" AFG AT PANEL HPCH/PCH LOCATION AND SEAL. PROVIDE 1" UNDERGROUND EMPTY CONDUIT WITH PULL STRING CONNECTED TO THE DATA SIDE OF THE 2 GANG JUNCTION BOX. RUN TO DATA CABINET IN EV CHARGING BUILDING AND STUB UP 24" AFG AND SEAL.
4. LEVEL 2 SINGLE EV CHARGER: PROVIDE FLUSH WEATHERPROOF IN GROUND 2 GANG JUNCTION BOX WITH BARRIER FOR SEPARATE POWER AND DATA CONNECTIONS. BOX LOCATION AT CHARGER TO BE VERIFIED IN FIELD PRIOR TO ROUGH IN. WIRE AND CONNECT TO PANEL PCH. THE CHARGER SHALL BE WIRED TO (1) 50 AMP, 2 POLE BREAKER. PROVIDE (3) #8, 1 #8G IN (1) 1" UNDERGROUND CONDUIT. CHARGER FURNISHED BY OWNER AND INSTALLED/WIRED BY DIV 26. PROVIDE 1" UNDERGROUND CONDUIT WITH (1) CATEGORY 6 CABLE CONNECTED TO EACH CHARGER AND WIRED TO THE EV CHARGING BUILDING DATA CABINET.
5. WIRE AND CONNECT CAMERAS SHOWN ON ES100 TO CCTV HEAD END IN TELCOM 007. PROVIDE CATEGORY 6 CABLING FROM CAMERA LOCATION TO EV CHARGING BUILDING DADA CABINET. WIRE FROM DATA CABINET TO CCTV HEAD END VIA THE FIBER BACKBONE.

A4 KEYNOTES

PROJECT KEY PLAN

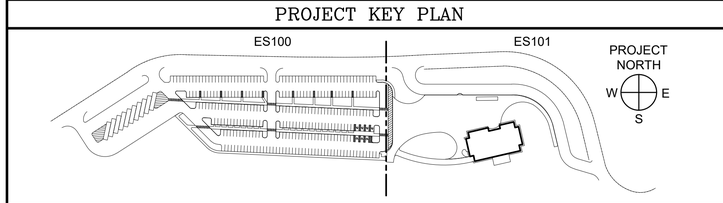

Allied Engineering
Structural Mechanical Electrical Commissioning
160 Veranda Street
Portland, Maine 04103
T: 207.221.2260
F: 207.221.2266
Web: www.allied-eng.com

AECOM
1 FEDERAL STREET, 8TH FLOOR
BOSTON, MA 02110
617.723.1700
www.aecom.com

AEI PROJECT NO. 12069 | CAD FILE:

STATE OF MAINE
DEPARTMENT OF TRANSPORTATION

	DATE
FED PIN NO: NA	
WIN NO: 017163.02 & 017163.03	

STATE OF MAINE — CATHERINE A. FAUCHER No. 7575 — PROFESSIONAL ENGINEER

SIGNATURE

P.E. NUMBER 7575

DATE JANUARY 17, 2022

PROJECT INFORMATION	
PROGRAM	
PROJECT MANAGER	
DESIGNER	AECOM
CONSULTANT	ALLIED ENGINEERING
PROJECT RESIDENT	
CONTRACTOR	
PROJECT COMPLETION DATE	–

MAINE DEPARTMENT OF TRANSPORTATION
ACADIA GATEWAY FACILITY
INTERMODAL AND WELCOME CENTER

ELECTRICAL SITE PLAN PART PLAN WEST

SHEET NUMBER
ES100

© Copyright 2012 ALLIED ENGINEERING

N:\Projects\2012\12069 ~ Acadia Gateway Visitors Center\4a - Drawings\12069_ES.dwg Jan 10, 2022 - 11:08am

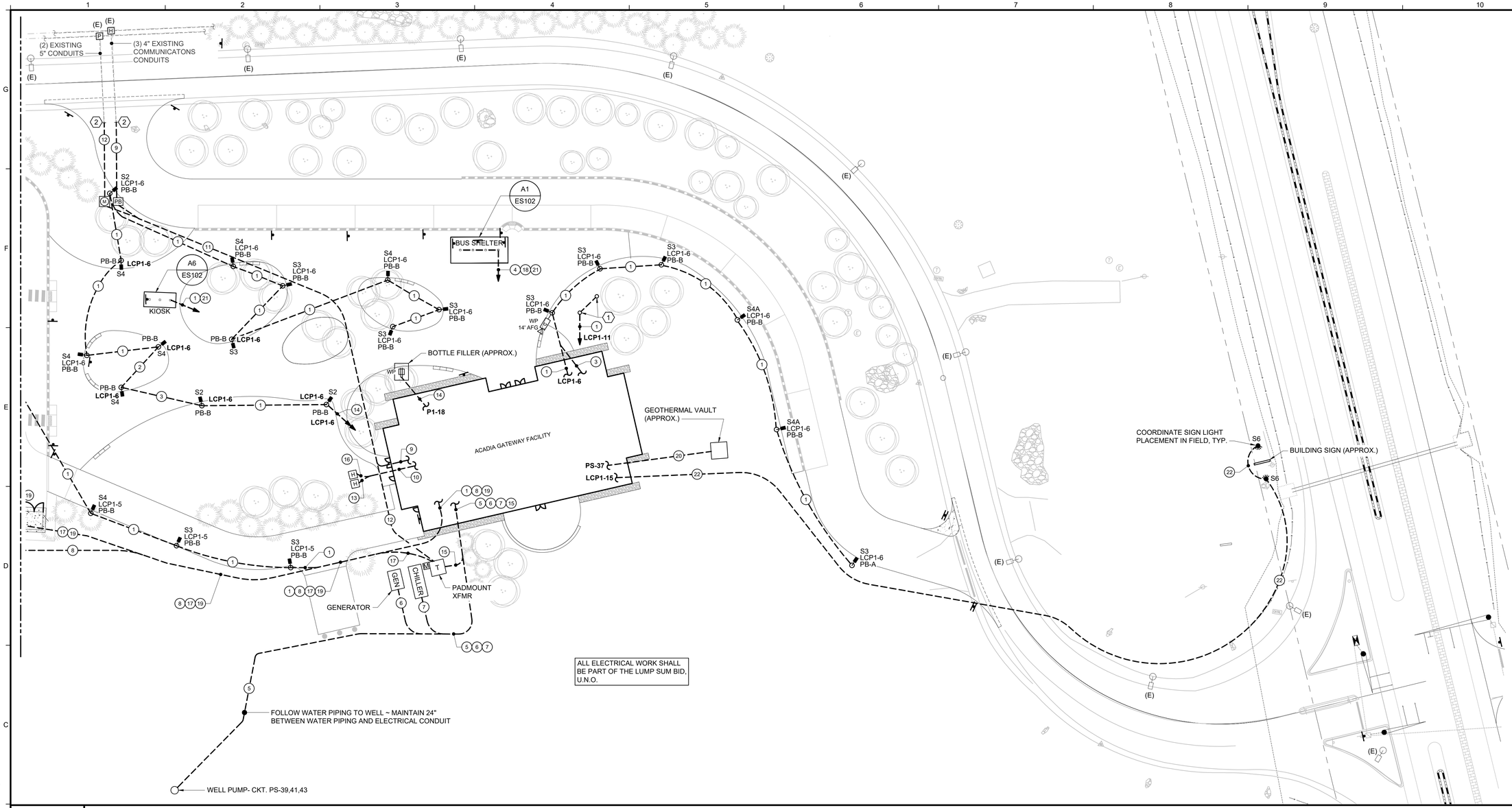

ALL ELECTRICAL WORK SHALL BE PART OF THE LUMP SUM BID, U.N.O.

C1 SITE PART PLAN WEST

1"=30'-0"

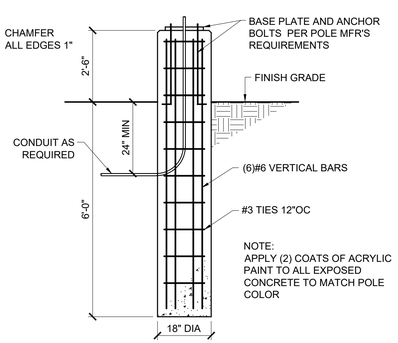

A1 POLE BASE DETAIL ~ TYPE PB-A

NO SCALE

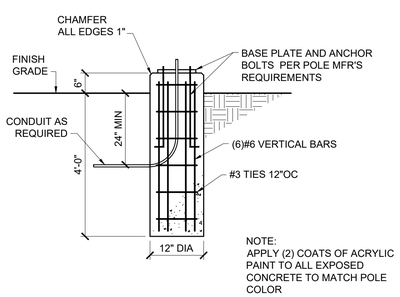

A3 POLE BASE DETAIL ~ TYPE PB-B

NO SCALE

1. WIRE AND CONNECT FLAGPOLES WITH INTEGRAL LIGHT. LIGHT FURNISHED BY DIVISION 10.
2. REMOVE EXISTING HAND HOLE AND CONNECT INDICATED CONDUITS TO EXISTING CONDUITS.

A6 KEYNOTES

PROJECT KEY PLAN

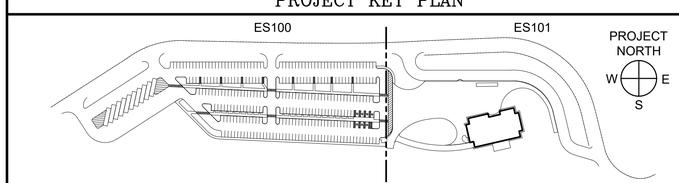

Allied Engineering
Structural Mechanical Electrical Commissioning
160 Veranda Street
Portland, Maine 04103
T: 207.221.2260
F: 207.221.2266
Web: www.allied-eng.com

AECOM
1 FEDERAL STREET, 8TH FLOOR
BOSTON, MA 02110
617.723.1700
www.aecom.com

AEI PROJECT NO. 12069 | CAD FILE:

STATE OF MAINE
DEPARTMENT OF TRANSPORTATION

	DATE

FED PIN NO: NA

WIN NO: 017163.02 & 017163.03

STATE OF MAINE · CATHERINE A. FALCHER No. 7575 · LICENSED PROFESSIONAL ENGINEER

SIGNATURE –

P.E. NUMBER 7575

DATE JANUARY 17, 2022

PROJECT INFORMATION		DATE
PROGRAM		
PROJECT MANAGER	AECOM	
DESIGNER	ALLIED ENGINEERING	
CONSULTANT		
PROJECT RESIDENT		
CONTRACTOR		
PROJECT COMPLETION DATE	–	

MAINE DEPARTMENT OF TRANSPORTATION
ACADIA GATEWAY FACILITY
INTERMODAL AND WELCOME CENTER

ELECTRICAL SITE PLAN
PART PLAN WEST

Copyright 2016 AUDI Associates, Inc.

SHEET NUMBER
ES101

N:\Projects\2012\12069 ~ Acadia Gateway Visitors Center\4a - Drawings\12069_ES.dwg Jan 10, 2022 - 11:08am

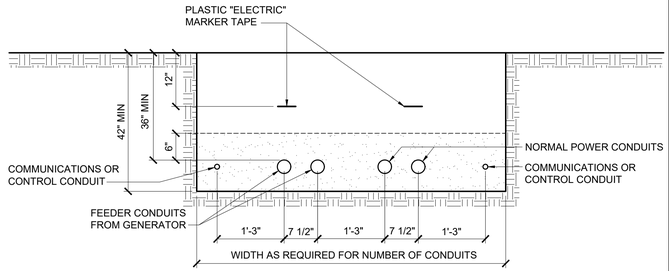

DETAIL INDICATES TYPICAL SPACING BETWEEN CONDUITS OF VARIOUS SYSTEMS, REFER TO SITE PLAN FOR SIZES AND NUMBER OF CONDUITS

F1	TYPICAL TRENCH DETAIL AND TYPICAL SEPARATION OF NORMAL POWER SYSTEMS
NO SCALE	

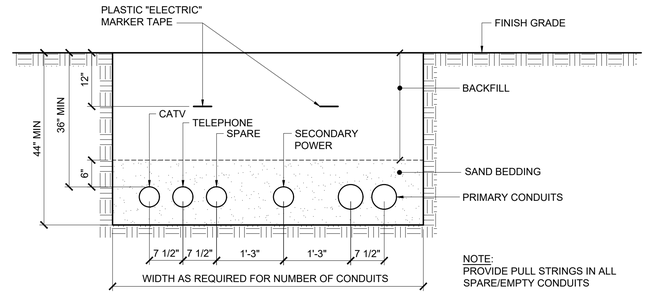

NOTE:
PROVIDE PULL STRINGS IN ALL SPARE/EMPTY CONDUITS

DETAIL INDICATES TYPICAL SPACING BETWEEN CONDUITS OF VARIOUS SYSTEMS, REFER TO SITE PLAN FOR SIZES AND NUMBER OF CONDUITS

F4	TYPICAL TRENCH DETAIL AND TYPICAL SEPARATION OF UTILITY SYSTEMS
NO SCALE	

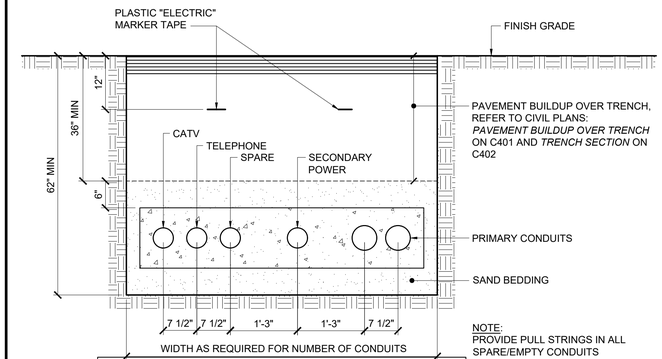

NOTE:
PROVIDE PULL STRINGS IN ALL SPARE/EMPTY CONDUITS

DETAIL INDICATES TYPICAL SPACING BETWEEN CONDUITS OF VARIOUS SYSTEMS, REFER TO SITE PLAN FOR SIZES AND NUMBER OF CONDUITS

F7	TYPICAL TRENCH DETAIL AND TYPICAL SEPARATION OF UTILITY SYSTEMS UNDER PAVEMENT AND/OR WHERE REQUIRED TO BE CONCRETE ENCASED PER THE SPECIFICATIONS
NO SCALE	

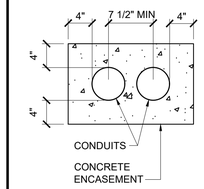

B6	TYP CONCRETE ENCASEMENT
NO SCALE	

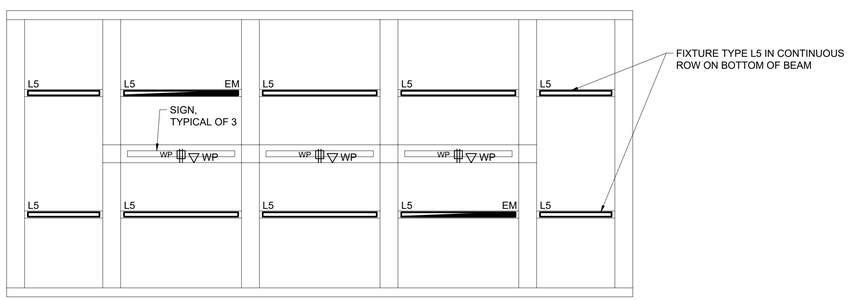

REFLECTED CEILING PLAN

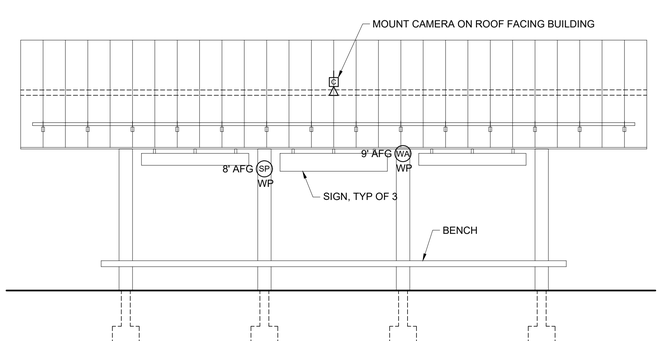

ELEVATION

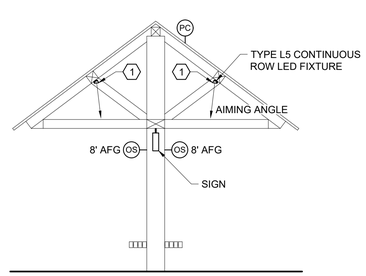

SECTION

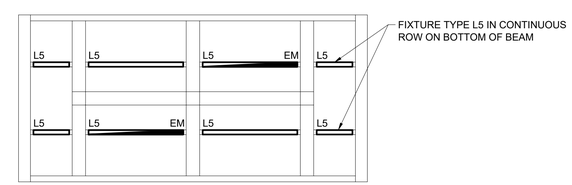

REFLECTED CEILING PLAN

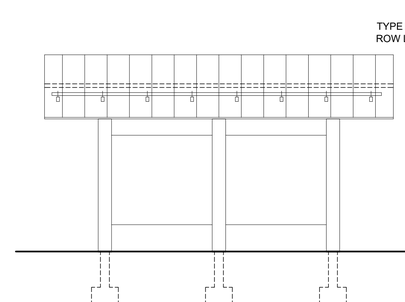

ELEVATION

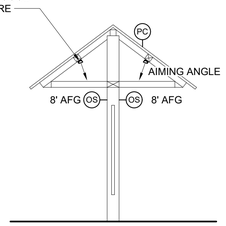

SECTION

CIRCUITING NOTES, THIS SHEET ONLY:

BUS SHELTER NORMAL LIGHTING: PH-11
KIOSK NORMAL LIGHTING: PH-13
BUS SHELTER EMERGENCY LIGHTING: PE-5
KIOSK EMERGENCY LIGHTING: PE-6
RECEPTACLES: P1-18

LIGHTING CONTROL NOTE:
ALL LIGHTING IN BUS SHELTER AND KIOSK SHALL BE AUTO ON/AUTO OFF VIA OCCUPANCY SENSOR WHEN LIGHTING IS ENABLED AFTER DARK BY THE PHOTOCELL.

ALL ELECTRICAL WORK SHALL BE PART OF THE LUMP SUM BID, U.N.O.

A1	BUS SHELTER DETAILS
1/4"=1'-0"	

A6	KIOSK DETAILS
1/4"=1'-0"	

Allied Engineering
Structural Mechanical Electrical Commissioning
160 Veranda Street
Portland, Maine 04103
T: 207.221.2260
F: 207.221.2266
Web: www.allied-eng.com

AECOM
1 FEDERAL STREET, 8TH FLOOR
BOSTON, MA 02110
617.723.1700
www.aecom.com

AEI PROJECT NO. 12069
CAD FILE:

STATE OF MAINE
DEPARTMENT OF TRANSPORTATION

DATE	
FED PIN NO: NA	
WIN NO: 017163.02 & 017163.03	

STATE OF MAINE
CATHERINE A. FAUCHER
No. 7575
LICENSED
PROFESSIONAL ENGINEER

SIGNATURE –
P.E. NUMBER 7575
DATE JANUARY 17, 2022

PROJECT INFORMATION	
PROGRAM	
PROJECT MANAGER	
DESIGNER	AECOM
CONSULTANT	ALLIED ENGINEERING
PROJECT RESIDENT	
CONTRACTOR	
PROJECT COMPLETION DATE	–

MAINE DEPARTMENT OF TRANSPORTATION
ACADIA GATEWAY FACILITY
INTERMODAL AND WELCOME CENTER

ENLARGED PART SITE PLAN
ELECTRICAL SITE DETAILS

SHEET NUMBER
ES102

O:\Archived Projects 10-13-21\Cad\2012\12069 ~ Acadia Gateway Visitors Center\4a - Drawings\12069_ES.dwg Oct 14, 2022 - 10:57am

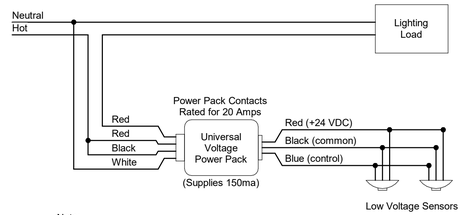

Note:

Do NOT power more than 4 devices, sensor or slave packs, from a single power pack.

F6 | LIGHTING CONTROL DETAIL - NOTE 5

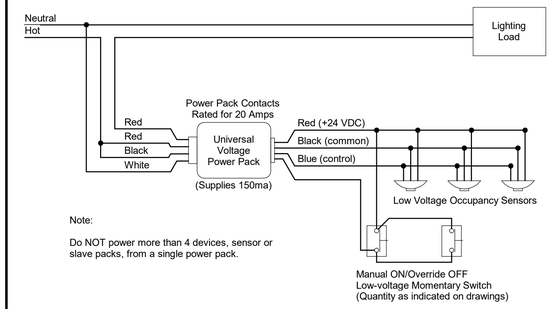

Note:

Do NOT power more than 4 devices, sensor or slave packs, from a single power pack.

F8 | LIGHTING CONTROL DETAIL - NOTE 6

LIGHTING CONTROL NOTES SCHEDULE

TAG/ NOTE	DESCRIPTION OF LIGHTING CONTROL DEVICES AND OPERATION	DETAIL NUMBER
1	WALL SWITCH - MANUAL ON/MANUAL OFF	**NO DETAIL**
2	WALL SWITCH WITH OCCUPANCY SENSOR - MANUAL ON AND OFF/AUTO OFF	**NO DETAIL**
3	WALL SWITCH - MANUAL ON AND OFF; AUTO OFF VIA OCCUPANCY SENSORS; DIMMING VIA DAYLIGHT HARVESTING SENSOR FOR FIXTURES INDICATED	
4	LIGHTING CONTROLLED BY LCP - REFER TO LIGHTING CONTROL PANEL SCHEDULE	**NO DETAIL**
5	AUTO ON/AUTO OFF VIA OCCUPANCY SENSOR(S)	**F6/EL100**
6	WALL SWITCH(ES) - MANUAL ON AND OFF; AUTO OFF VIA OCCUPANCY SENSOR(S)	**F8/EL100**
7	WALL SWITCH WITH DIMMER AND OCCUPANCY SENSOR - MANUAL ON AND OFF/MANUAL DIMMING/AUTO OFF	**NO DETAIL**
8	WALLSTATION(S) - MANUAL ON AND OFF WHERE NOTED ON PLANS; WALLSTATION(S) WITH DIMMER(S) - MANUAL ON AND OFF/MANUAL DIMMING; AUTO OFF VIA OCCUPANCY SENSORS	
9	WALLSTATION(S) - MANUAL ON AND OFF, WHERE NOTED ON PLANS; WALLSTATION(S) WITH DIMMER(S) - MANUAL ON AND OFF/MANUAL DIMMING; AUTO OFF VIA LCP; DIMMING VIA DAYLIGHT HARVESTING SENSOR FOR FIXTURES INDICATED	
10	WALL SWITCH - MANUAL ON AND OFF; WALL SWITCH WITH MANUAL DIMMER - RAISE, LOWER, AND ON/OFF; AUTO OFF VIA OCCUPANCY SENSORS	
11	AUTO ON/OFF VIA OCCUPANCY SENSORS; DIMMING VIA DAYLIGHT HARVESTING SENSOR FOR FIXTURES INDICATED	
12	STAIRS - EACH FIXTURE SHALL BE WIRED TO A NORMAL CIRCUIT AND AN EMERGENCY CIRCUIT. EMERGENCY CIRCUIT SHALL BE CONTROLLED BY LCP ONLY. NORMAL CIRCUIT SHALL BE CONTROLLED BY AUTO ON/AUTO OFF MOTION SENSORS.	

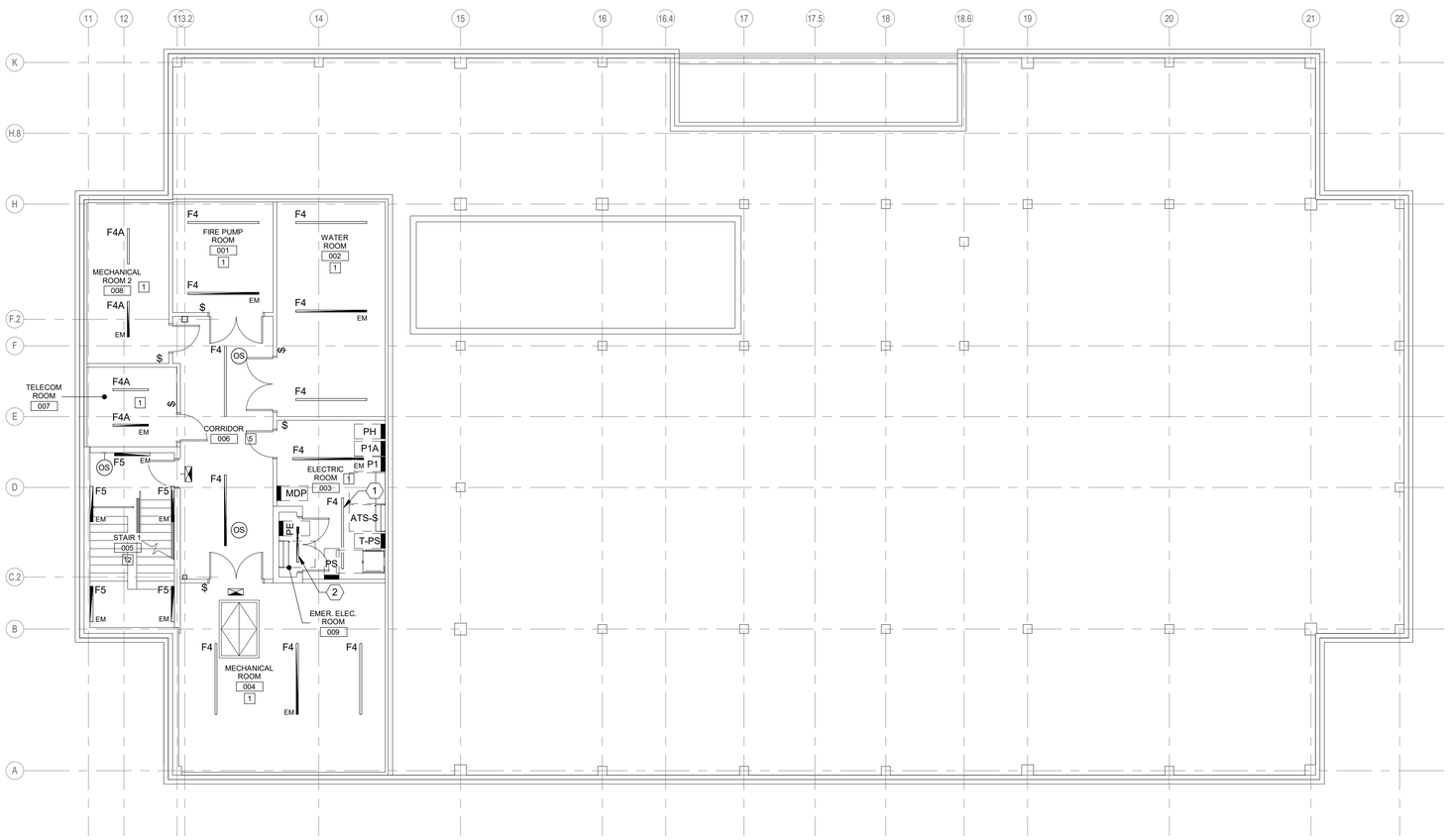

LIGHTING KEY NOTES:

1. PROVIDE EMERGENCY BATTERY BALLAST IN THIS FIXTURE.
2. TYPE F4A EMERGENCY FIXTURE, WALL MOUNTED 12" ABOVE DOOR. CONTROL WITH ELECTRIC RM 003 LIGHTS.

GENERAL NOTE

ALL FIXTURES TYPE F4 & F4A SHOWN ON THIS SHEET SHALL BE 9'-0" AFF U.N.O.

LIGHTING CIRCUITING NOTES, THIS SHEET ONLY:

NORMAL LIGHTING: PH-2
EXIT AND EMERGENCY LIGHTING: PE-2
STAIR NORMAL LIGHTING: PH-1 (277V)
STAIR EGRESS LIGHTING: LCP1-1 (277V)

PROJECT KEY PLAN

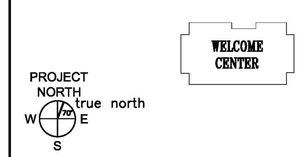

Allied Engineering
Structural Mechanical Electrical Plumbing
160 Veranda Street
Portland, Maine 04103
P: 207.221.2260
F: 207.221.2266
Web: www.allied-eng.com

AECOM
1 FEDERAL STREET, 8TH FLOOR
BOSTON, MA 02110
617.723.1700
www.aecom.com

Allied Project No: 12069 | Cad File:

A1 | LIGHTING PLAN - BASEMENT - VISITOR CENTER
1/8" = 1'-0"

STATE OF MAINE
DEPARTMENT OF TRANSPORTATION

DATE

FED PIN NO: NA

WIN NO: 017163.02 & 017163.03

STATE OF MAINE
CATHERINE A. FAUCHER
No. 7575
LICENSED PROFESSIONAL ENGINEER

SIGNATURE

P.E. NUMBER 7575

DATE January 17, 2022

PROJECT INFORMATION

PROGRAM	-
PROJECT MANAGER	-
DESIGNER	AECOM
CONSULTANT	ALLIED ENGINEERING
PROJECT RESIDENT	-
CONTRACTOR	-
PROJECT COMPLETION DATE	-

MAINE DEPARTMENT OF TRANSPORTATION
ACADIA GATEWAY FACILITY
INTERMODAL AND WELCOME CENTER

Basement – Lighting Plan

SHEET NUMBER
EL100

Filename: Division: Date: Username:

LIGHTING CONTROL NOTES SCHEDULE

TAG/ NOTE	DESCRIPTION OF LIGHTING CONTROL DEVICES AND OPERATION	DETAIL NUMBER
1	WALL SWITCH - MANUAL ON/MANUAL OFF	**NO DETAIL**
2	WALL SWITCH WITH OCCUPANCY SENSOR - MANUAL ON AND OFF/AUTO OFF	**NO DETAIL**
3	WALL SWITCH - MANUAL ON AND OFF; AUTO OFF VIA OCCUPANCY SENSORS; DIMMING VIA DAYLIGHT HARVESTING SENSOR FOR FIXTURES INDICATED	
4	LIGHTING CONTROLLED BY LCP - REFER TO LIGHTING CONTROL PANEL SCHEDULE	**NO DETAIL**
5	AUTO ON/AUTO OFF VIA OCCUPANCY SENSOR(S)	**F6/EL100**
6	WALL SWITCH(ES) - MANUAL ON AND OFF; AUTO OFF VIA OCCUPANCY SENSOR(S)	**F8/EL100**
7	WALL SWITCH WITH DIMMER AND OCCUPANCY SENSOR - MANUAL ON AND OFF/MANUAL DIMMING/AUTO OFF	**NO DETAIL**
8	WALLSTATION(S) - MANUAL ON AND OFF WHERE NOTED ON PLANS; WALLSTATION(S) WITH DIMMER(S) - MANUAL ON AND OFF/MANUAL DIMMING; AUTO OFF VIA OCCUPANCY SENSORS	
9	WALLSTATION(S) - MANUAL ON AND OFF, WHERE NOTED ON PLANS; WALLSTATION(S) WITH DIMMER(S) - MANUAL ON AND OFF/MANUAL DIMMING; AUTO OFF VIA LCP; DIMMING VIA DAYLIGHT HARVESTING SENSOR FOR FIXTURES INDICATED	
10	WALL SWITCH - MANUAL ON AND OFF; WALL SWITCH WITH MANUAL DIMMER - RAISE, LOWER, AND ON/OFF; AUTO OFF VIA OCCUPANCY SENSORS	
11	AUTO ON/OFF VIA OCCUPANCY SENSORS; DIMMING VIA DAYLIGHT HARVESTING SENSOR FOR FIXTURES INDICATED	
12	STAIRS - EACH FIXTURE SHALL BE WIRED TO A NORMAL CIRCUIT AND AN EMERGENCY CIRCUIT. EMERGENCY CIRCUIT SHALL BE CONTROLLED BY LCP ONLY. NORMAL CIRCUIT SHALL BE CONTROLLED BY AUTO ON/AUTO OFF MOTION SENSORS.	

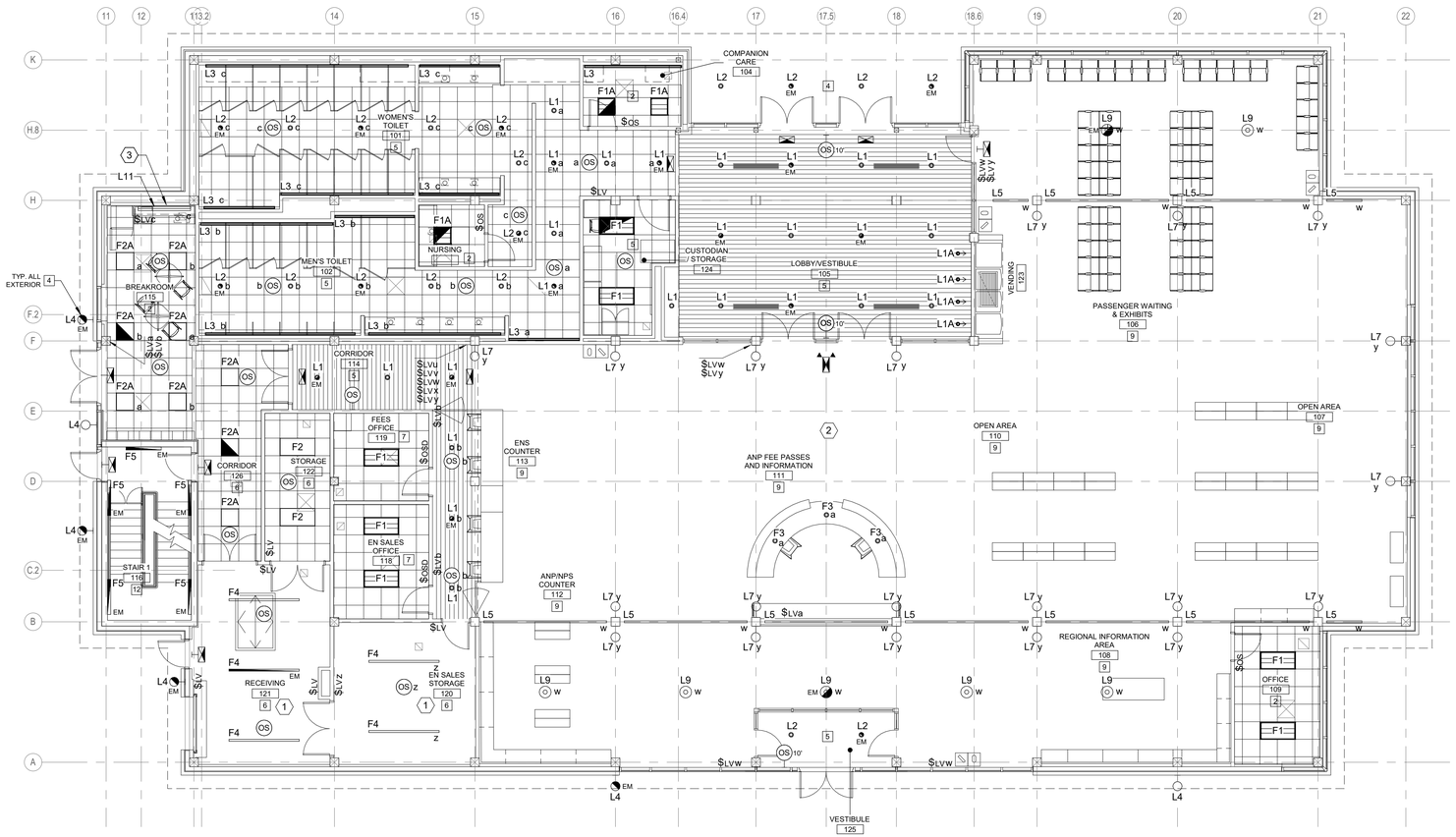

LIGHTING KEY NOTES:

1. MOUNT FIXTURES IN THIS ROOM 9'-0" AFF. U.N.O.
2. CONDUIT AND WIRING SHALL BE CONCEALED FROM VIEW. ALL EXPOSED WIRING IN THIS SPACE SHALL BE ROUTED ON TOP OF BEAMS AND SHALL BE APPROVED BY ARCHITECT PRIOR TO ROUGH-IN.
3. CONNECT UNDERCABINET LIGHTING FIXTURE TO A 120V CIRCUIT SERVING THE COUNTERTOP.

LIGHTING CIRCUITING NOTES, THIS SHEET ONLY:

OPEN AREA LIGHTING SWITCH 'a': LCP1-8 (120V)
OPEN AREA LIGHTING SWITCH 'y': LCP1-9 (120V)
OPEN AREA LIGHTING SWITCH 'w': LCP1-12 (277V)
NORMAL (OTHER THAN OPEN AREA) LIGHTING: PH-3
EXIT AND EMERGENCY LIGHTING: PE-3
STAIR NORMAL LIGHTING: PH-1 (277V)
STAIR EGRESS LIGHTING: LCP1-1 (277V)

PROJECT KEY PLAN

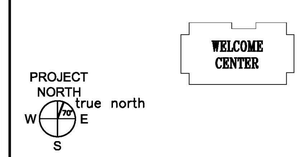

Allied Engineering
Structural Mechanical Electrical Plumbing
160 Veranda Street
Portland, Maine 04103
P: 207.221.2260
F: 207.221.2266
Web:www.allied-eng.com

AECOM
1 FEDERAL STREET, 8TH FLOOR
BOSTON, MA 02110
617.723.1700
www.aecom.com

Allied Project No: 12069 | Cad File:

A1	LIGHTING PLAN - FIRST FLOOR - VISITOR CENTER
1/8" = 1'-0"	

STATE OF MAINE
DEPARTMENT OF TRANSPORTATION

DATE

FED PIN NO: NA
WIN NO: 017163.02 & 017163.03

STATE OF MAINE
CATHERINE A. FAUCHER
No. 7575
LICENSED
PROFESSIONAL ENGINEER

SIGNATURE

P.E. NUMBER 7575

DATE January 17, 2022

PROJECT INFORMATION

PROGRAM	
PROJECT MANAGER	
DESIGNER	AECOM
CONSULTANT	ALLIED ENGINEERING
PROJECT RESIDENT	
CONTRACTOR	
PROJECT COMPLETION DATE	

MAINE DEPARTMENT OF TRANSPORTATION
ACADIA GATEWAY FACILITY
INTERMODAL AND WELCOME CENTER

First Floor Visitor Center – Lighting Plan

SHEET NUMBER
EL101

Filename: Division: Date: Username:

LIGHTING CONTROL NOTES SCHEDULE

TAG/ NOTE	DESCRIPTION OF LIGHTING CONTROL DEVICES AND OPERATION	DETAIL NUMBER
1	WALL SWITCH - MANUAL ON/MANUAL OFF	**NO DETAIL**
2	WALL SWITCH WITH OCCUPANCY SENSOR - MANUAL ON AND OFF/AUTO OFF	**NO DETAIL**
3	WALL SWITCH - MANUAL ON AND OFF; AUTO OFF VIA OCCUPANCY SENSORS; DIMMING VIA DAYLIGHT HARVESTING SENSOR FOR FIXTURES INDICATED	
4	LIGHTING CONTROLLED BY LCP - REFER TO LIGHTING CONTROL PANEL SCHEDULE	**NO DETAIL**
5	AUTO ON/AUTO OFF VIA OCCUPANCY SENSOR(S)	**F6/EL100**
6	WALL SWITCH(ES) - MANUAL ON AND OFF; AUTO OFF VIA OCCUPANCY SENSOR(S)	**F8/EL100**
7	WALL SWITCH WITH DIMMER AND OCCUPANCY SENSOR - MANUAL ON AND OFF/MANUAL DIMMING/AUTO OFF	**NO DETAIL**
8	WALLSTATION(S) - MANUAL ON AND OFF WHERE NOTED ON PLANS; WALLSTATION(S) WITH DIMMER(S) - MANUAL ON AND OFF/MANUAL DIMMINGS; AUTO OFF VIA OCCUPANCY SENSORS	
9	WALLSTATION(S) - MANUAL ON AND OFF, WHERE NOTED ON PLANS; WALLSTATION(S) WITH DIMMER(S) - MANUAL ON AND OFF/MANUAL DIMMINGS; AUTO OFF VIA LCP; DIMMING VIA DAYLIGHT HARVESTING SENSOR FOR FIXTURES INDICATED	
10	WALL SWITCH - MANUAL ON AND OFF; WALL SWITCH WITH MANUAL DIMMER - RAISE, LOWER, AND ON/OFF; AUTO OFF VIA OCCUPANCY SENSORS	
11	AUTO ON/OFF VIA OCCUPANCY SENSORS; DIMMING VIA DAYLIGHT HARVESTING SENSOR FOR FIXTURES INDICATED	
12	STAIRS - EACH FIXTURE SHALL BE WIRED TO A NORMAL CIRCUIT AND AN EMERGENCY CIRCUIT. EMERGENCY CIRCUIT SHALL BE CONTROLLED BY LCP ONLY. NORMAL CIRCUIT SHALL BE CONTROLLED BY AUTO ON/AUTO OFF MOTION SENSORS.	

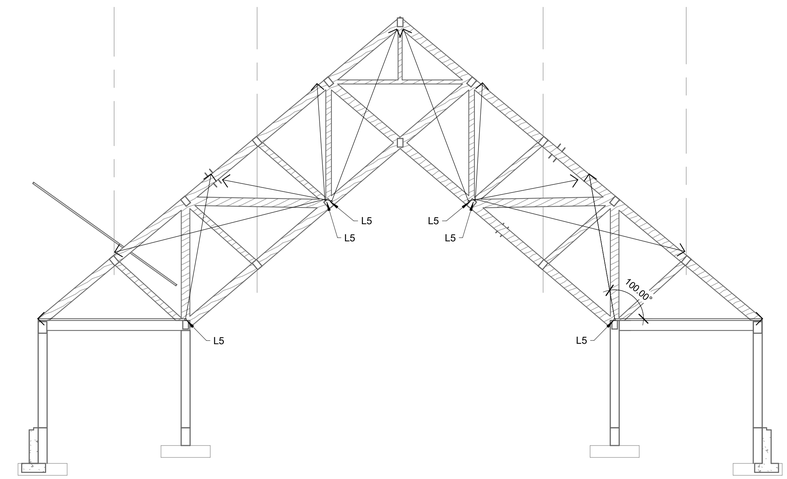

E7 | TYPE L5 FIXTURE AIMING
1/8" = 1'-0"

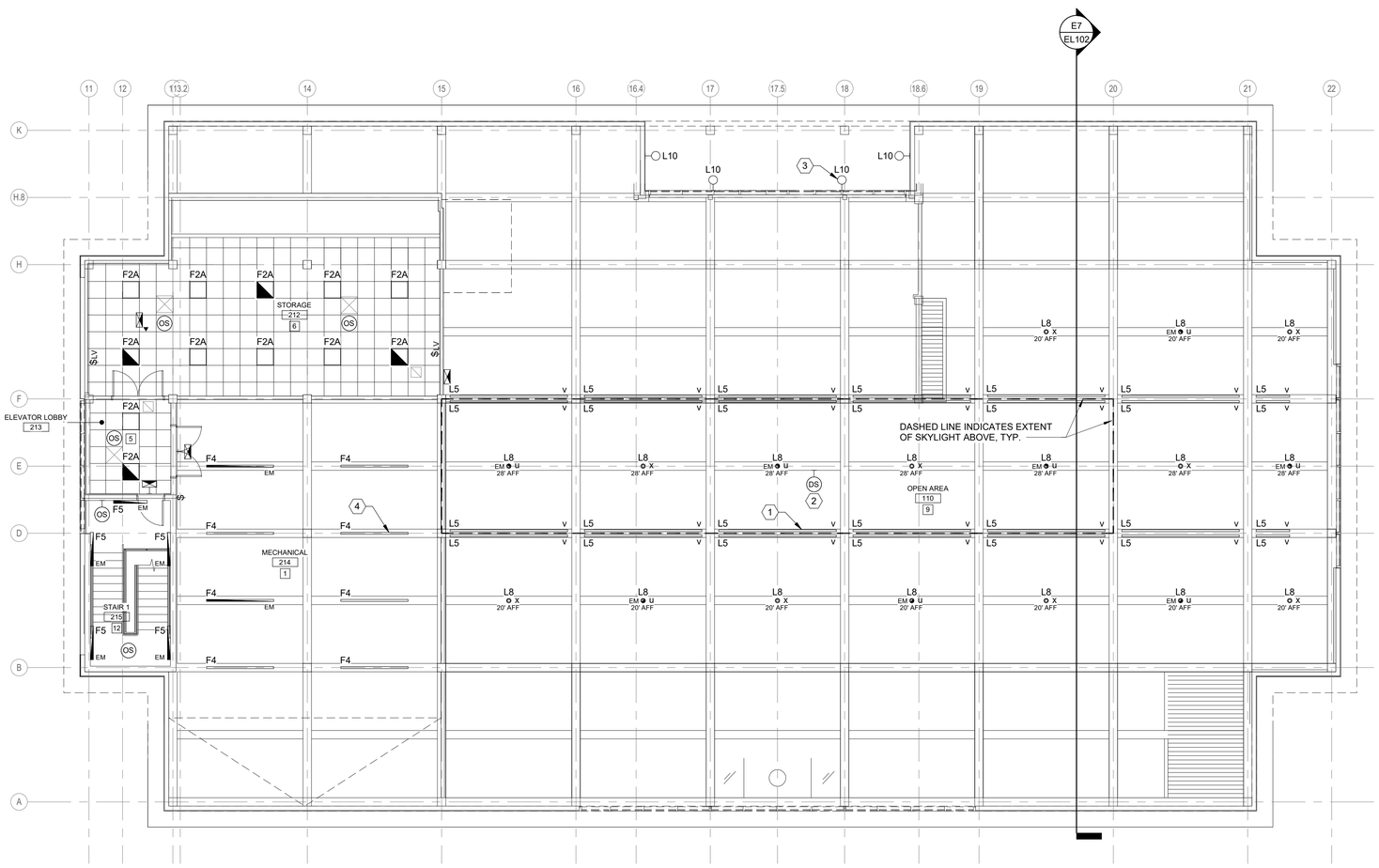

LIGHTING KEY NOTES:

1. MOUNT FIXTURE TYPE L5 TO TOP OF BEAM, FACING UP. TYP. ALL TYPE L5's THIS SHEET.
2. MOUNT DAYLIGHT SENSOR TO SIDE OF BEAM. CONTROLS FIXTURES WITH 'u', 'v', AND 'x' SUBSCRIPTS.
3. MOUNT POINTING UP TO GRAZE ROOF EYEBROW. TYP. ALL L10's THIS SHEET.
4. MOUNT F4's IN THIS ROOM TO UNDERSIDE OF BEAMS, TYP.

LIGHTING CIRCUITING NOTES, THIS SHEET ONLY:

OPEN AREA LIGHTING:
- GROUP 'x': LCP1-14 (277V)
- GROUP 'u': LCP1-3 (277V)
- GROUP 'v', PLAN NORTH OF ROOF PEAK: LCP1-13 (277V)
- GROUP 'v', PLAN SOUTH OF ROOF PEAK: LCP1-13 (277V)

NORMAL (OTHER THAN OPEN AREA) LIGHTING: PH-7
EXIT AND EMERGENCY LIGHTING: PE-4
STAIR NORMAL LIGHTING: PH-1 (277V)
STAIR EGRESS LIGHTING: LCP1-1 (277V)

PROJECT KEY PLAN

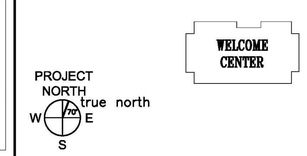

A1 | LIGHTING PLAN - SECOND FLOOR - VISITOR CENTER
1/8" = 1'-0"

Allied Engineering
Structural Mechanical Electrical Plumbing
160 Veranda Street
Portland, Maine 04103
P: 207.221.2260
F: 207.221.2266
Web:www.allied-eng.com

AECOM
1 FEDERAL STREET, 8TH FLOOR
BOSTON, MA 02110
617.723.1700
www.aecom.com

Allied Project No: 12069 | Cad File:

STATE OF MAINE
DEPARTMENT OF TRANSPORTATION

DATE

FED PIN NO: NA

WIN NO: 017163.02 & 017163.03

STATE OF MAINE
CATHERINE A. FAUCHER
No. 7575
LICENSED PROFESSIONAL ENGINEER

SIGNATURE

P.E. NUMBER 7575

DATE January 17, 2022

PROJECT INFORMATION

PROGRAM	–
PROJECT MANAGER	–
DESIGNER	AECOM
CONSULTANT	ALLIED ENGINEERING
PROJECT RESIDENT	–
CONTRACTOR	–
PROJECT COMPLETION DATE	–

MAINE DEPARTMENT OF TRANSPORTATION
ACADIA GATEWAY FACILITY
INTERMODAL AND WELCOME CENTER

Second Floor Visitor Center – Lighting Plan

SHEET NUMBER
EL102

Filename: Date: Division: Username:

ACADIA GATEWAY LUMINAIRE SCHEDULE

TYPE	DESCRIPTION	MFR	CATALOG SERIES NUMBER SEE NOTE 1	MOUNTING	VOLTS	LAMP WATTS	LAMP OUTPUT LUMENS	LAMP LED 3000K UNO	KEY NOTES
F1	2x4 HIGH PERFORMANCE TROFFER	METALUX	24RLN	RECESSED	277	35	4743		5
F1A	2x2 HIGH PERFORMANCE TROFFER	METALUX	22RLN	RECESSED	277	21	2543		5
F2	2x4 LENSED TROFFER	METALUX	24FP	RECESSED	277	40	3884		5
F2A	2x2 LENSED TROFFER	METALUX	22FP	RECESSED	277	30	3331		5
F3	DECORATIVE PENDANT	AYRE	NAK1	PENDANT 12'-0" AFF	120	7	370		3, 6
F4	8' SURFACE OR PENDANT STRIP	METALUX	8TSLN LED	CEILING UNO	277	42	6063		5
F4A	4' SURFACE OR PENDANT STRIP	METALUX	4SLN LED	CEILING UNO	277	21	3032		5
F5	4' STAIRWAY LIGHT	METALUX	SWLED/FULL FROST LENS WIDE/2 DRIVERS	WALL 6'-6" AFF	277	40	4436		5,7
L1	DOWNLIGHT	ALPHABET	NU4RD SERIES- 80 CRI-WIDE FLOOD SPECULAR REFLECTOR WITH CLEAR LENS-MATT CHROME TRIM AND BEZEL	RECESSED	277	30	2600		5
L1A	ADJUSTABLE SPOT LIGHT	ALPHABET	NU4RA SERIES- 90 CRI-35 DEGREE SPECULAR SPECULAR REFLECTOR WITH CLEANR LENS-MATT CHROME TRIM AND BEZEL	RECESSED	277	27	2320		5
L2	DOWNLIGHT, WET LOCATION	ALPHABET	NU6RDLED- WIDE FLOOD SPECULAR REFLECTOR WITH CLEAR LENS-MATT CHROME TRIM AND BEZEL	RECESSED	277	30	2560		5
L3	3" CONTINUOUS SLOT LIGHT	NEORAY	S123DR- WITH SATIN FROSTED SMOOTH FLAT DIFFUSER	RECESSED	277	6 W/FT	560 LUMENS /FT		
L4	EXTERIOR WALL LIGHT	STREETWORKS	GAWSA1-T4W-BZ	WALL	277	44	6060	LED 4000K	5
L5	ADJUSTABLE TRUSS MOUNTED LED UPLIGHT	ACCLAIM LIGHTING	LN SERIES WITH 90 DEGREE SYMMETRIC DISTRIBUTION, 80 CRI, ADJUSTABLE MOUNT -FOR OUTDOOR FIXTURES PROVIDE EXTERIOR WEATHERPROOF VERSION	TOP OF TRUSS UNO	277	12W/FT	794 LUMENS/FT		8
L7	3" DIA 7" H COLUMN UPLIGHT WITH SURFACE CANOPY	B-K LIGHTING	CL LED TR WFL-C WITH CLEAR LENS, NO WEEPHOLE,80 CRI,DIMMING	WALL 7'-6"	120	13	696		3,8
L8	9" CYLINDER PENDANT	KIRLIN	LSR09479 WIDE FLOOD/CRI 80/CLEAR REFLECTOR SELF TRIM WITHSPREAD LENS/STEM MOUNT	PENDANT HEIGHT AS NOTED	277	73	6500		3
L9	12" DECORATIVE PENDANT	VANTAGE LIGHTING	PGVPLED12-FLAT CLEAR BOTTOM LENS	PENDANT 16'-0" AFF	277	57	5000		3
L10	ADJUSTABLE FLOOD	TARGETTI	BLT RP L2 WIDE FLOOD	WALL 14'-0" AFF	277	12	800		3
L11	UNDERCABINET LIGHT	BRUCK	138546-WHITE HOUSING- PROVIDE LENGTH AS SHOWN ON PLANS	SURFACE	120	18	1350	LED ARRAY 3000K	
	AC ONLY EXIT SIGN	DUAL LITE	SE*RG	SEE NOTES	120 V AC ONLY	4		LED	4,5, 6
EBU	EMERGENCY BATTERY UNIT	DUAL LITE	DYN 6 SPECTRON/HEATER FOR COLD TEMP/NEMA 4X	WALL 7'6" AFF	120 VAC 6V DC	(2)6W	600	LED	
S1	SITE LIGHTING POLE LIGHT	MCGRAW EDISON	TLM WITH STANDARD 9" ARM-SINGLE HEAD -TYPE II DIST.	30' POLE	208	110W	8997	LED ARRAY 4000K	3,5
S2	SITE LIGHTING POLE LIGHT	MCGRAW EDISON	TLM WITH STANDARD 9" ARM-SINGLE HEAD -TYPE II DIST.	14' POLE	208	55W	5059	LED ARRAY 4000K	3,5
S3	SITE LIGHTING POLE LIGHT	MCGRAW EDISON	TLM WITH STANDARD 9" ARM-SINGLE HEAD -TYPE III DIST.	14' POLE	208	55W	5092	LED ARRAY 4000K	3,5
S4	SITE LIGHTING POLE LIGHT	MCGRAW EDISON	TLM WITH STANDARD 9" ARM-SINGLE HEAD -TYPE IV DIST.	14' POLE	208	55W	4990	LED ARRAY 4000K	2,3,5
S4A	SITE LIGHTING POLE LIGHT	MCGRAW EDISON	TLM WITH STANDARD 9" ARM-SINGLE HEAD -TYPE IV DIST.	20' POLE	208	55W	4990	LED ARRAY 4000K	3,5
S5	WALL LIGHT	KENALL	FN15 47 DB CEL	WALL 8' AFF	120	24	3000	LED ARRAY 4000K	
S6	SIGN LIGHT- SLIPFITTER GROUND-MOUNTED	LUMARK	NFFLD-S-C70-D-UNV-66	GRADE	208	20	2682	LED ARRAY 4000K	3,9

	NOTES
1	**NOTE THAT THESE NUMBERS ARE NOT COMPLETE CATALOG #'S. PROVIDE ALL REQUIREMENTS ON SCHEDULE,NOTES, SPECS, AND DRAWINGS COMBINED.**
2	THE (4) S4 FIXTURES LOCATED ON SHEET ES100 AT THE EV CHARGING AREA SHALL HAVE INTEGRAL MOTION SENSORS. PROVIDE PHOTOCELL ON ROOF OF EV BUILDING. FIXTURES SHALL BE CONTROLLED BY MOTION SENSORS. SENSOR OPERATION TO TURN ON LIGHTS SHALL BE ENABLED AFTER DARK BY THE PHOTOCELL.
3	FINISHES SHALL BE AS SELECTED BY ARCHITECT FROM MANUFACTURER'S STANDARD FINISHES.
4	PROVIDE WALL,CEILING, OR PENDANT MOUNTING AS INDICATED ON PLANS. PROVIDE NUMBER OF FACES AND ARROWS AS INDICATED.
5	DLC PREMIUM OR ENERGY STAR
6	VERIFY CEILING STRUCTURE AND MOUNTING HEIGHT PRIOR TO ORDERING ANY LIGHT FIXTURES.
7	FIXTURE SHALL HAVE 2 DRIVERS. (1) SHALL BE WIRED TO NORMAL POWER AND (1) SHALL BE WIRED TO EMERGENCY POWER.
8	PROVIDE ACCESSORIES, FEEDS, CONNECTORS,DRIVERS, MOUNTING EQUIPMENT, ETC. REQUIRED FOR COMPLETE OPERABLE INSTALLATION IN LENGTHS SHOWN ON PLAN.
9	PROVIDE WITH TOP AND SIDE SHIELD VISORS OPTION.

1. CATALOG SERIES NUMBERS ARE USED TO ESTABLISH A LEVEL OF QUALITY AND NOT INTENDED TO LIMIT COMPETITION. SERIES NUMBERS ARE NOT COMPLETE CATALOG NUMBERS. COMPLY WITH ADDITIONAL REQUIREMENTS IN SPECIFICATIONS AND DRAWINGS.

2. FIELD DIMENSION WALL COVE, WALL VALENCE AND WALL SLOT LIGHTING PRIOR TO ORDERING TO ENSURE PROPER FIXTURE LENGTHS. NOTIFY ARCHITECT OF ANY DISCREPANCIES IN LENGTHS SHOWN ON DRAWINGS AND ACTUAL FIELD DIMENSIONS. ADJUST LENGTHS OF ANY SPECIFIED FIXTURE AS DIRECTED BY ARCHITECT.

3. EXCEPT AS INDICATED OTHERWISE ON FIXTURE SCHEDULE, SUSPENDED LIGHT FIXTURES SHALL BE FURNISHED AND INSTALLED COMPLETE WITH STEEL STEM SETS, AND PIECES AND ALIGNERS WITH ALIGNER TYPE CANOPIES AS MANUFACTURED BY RESPECTIVE FIXTURE MANUFACTURER.

4. PENDANT MOUNTING HEIGHTS ARE TO BOTTOM OF FIXTURE. VERIFY EXACT MOUNTING HEIGHTS OF PENDANT FIXTURES WITH ARCHITECT PRIOR TO ROUGHING.

5. WALL MOUNT FIXTURE HEIGHTS ARE TO CENTERLINE UNLESS NOTED OTHERWISE. VERIFY EXACT MOUNTING HEIGHTS AND LOCATIONS OF WALL MOUNTED LIGHTING WITH ARCHITECT PRIOR TO ROUGHING.

6. REFER TO REFLECTED CEILING PLANS FOR EXACT LOCATION OF CEILING MOUNTED LIGHTING AND DEVICES.

7. PROVIDE TRIM AND MOUNTING ACCESSORIES FOR RECESSED LIGHTING FIXTURES WHICH ARE COMPATIBLE WITH THE TYPE OF CEILING CONSTRUCTION IN WHICH THEY ARE TO BE MOUNTED. REFER TO REFLECTED CEILING PLANS AND ROOM FINISH SCHEDULES.

8. LIGHT FIXTURE LOCATIONS IN MECHANICAL ROOMS AND ELECTRIC ROOMS ARE APPROXIMATE. INSTALL LIGHTING TO AVOID DUCTWORK, PIPING AND ELECTRICAL ITEMS.

9. PENDANT LINEAR FIXTURES SHALL SATISFY LENGTHS SHOWN ON DRAWINGS.

10. PROVIDE WIRE GUARDS WHERE INDICATED ON FLOOR PLANS.

LIGHTING CONTROL PANEL SCHEDULE ~ LCP1

DESIGNATION: LCP1	MOUNTING: SURFACE
CONTROL VOLTAGE: 277V	LOCATION: MAIN ELECTRIC ROOM
CONTROL CIRCUIT: PH-9	

RELAY NO	CIRCUIT NO	KEYNOTE NO	DESCRIPTION
1	PE-1	4	STAIRS (277V)
2	PE-3	1,5	OUTDOOR WALL LIGHTING (277V)
3	PE-4	3,5	OPEN AREA SWITCH 'u' (277V)
4			
PROVIDE BARRIER BETWEEN NORMAL AND EMERGENCY CIRCUITS			
5	P1A-10,12	1	POLE LIGHTS (208V)
6	P1A-6,8	1	POLE LIGHTS (208V)
7	P1A-4	2	FLAG POLE LIGHT (120V)
8	P1-19	3	OPEN AREA SWITCH 'a' (120V)
9	P1-19	3	OPEN AREA SWITCH 'y' (120V)
10	PH-1	4	STAIRS (277V)
11	PH-3	1	OUTDOOR WALL LIGHTING (277V)
12	PH-4	3	OPEN AREA SWITCH 'w' (277V)
13	PH-5 & PH-6	3	OPEN AREA SWITCH 'v' (277V)
14	PH-7	3	OPEN AREA SWITCH 'x' (277V)
15	P1A-4	1	SIGN LIGHTS (120V)
16			SPARE
17			SPARE
18			SPARE
19			SPARE
20			SPARE
21			SPARE
22			SPARE
23			SPARE
24			SPARE

	KEYNOTES:
1	PROGRAM FOR AUTO-ON/AUTO-OFF CONTROL VIA ASTRONOMICAL CLOCK ~ COORDINATE TIME SCHEDULE WITH OWNER.
2	PROGRAM FOR AUTO-ON/AUTO-OFF VIA PHOTOCELL.
3	MANUAL ON VIA WALL SWITCH, AUTO OFF VIA TIME CONTROLS.
4	STAIRS - EACH FIXTURE SHALL BE WIRED TO A NORMAL CIRCUIT AND AN EMERGENCY CIRCUIT. EMERGENCY CIRCUIT SHALL BE CONTROLLED BY LCP ONLY AND EMERGENCY LIGHTING SHALL BE ON DURING BUILDING OCCUPIED HOURS.. NORMAL CIRCUIT SHALL BE CONTROLLED BY AUTO ON/AUTO OFF MOTION SENSORS. ALL STAIR LIGHTING SHALL BE ON/FULL OUTPUT UPON LOSS OF NORMAL POWER OR FIRE ALARM.
5	EMERGENCY LIGHTING SHALL BE ON/FULL OUTPUT UPON LOSS OF NORMAL POWER OR FIRE ALARM.
	GENERAL NOTES:
1	PROVIDE INTEGRAL ASTRONOMICAL TIME CLOCK.
2	PROVIDE CAT6 DATA CABLE FROM LCP TO DATA NETWORK IN TELECOM ROOM 007 FOR REMOTE LIGHTING CONTROL AND MONTORING.

Allied Engineering
Structural Mechanical Electrical Plumbing
160 Veranda Street
Portland, Maine 04103
P: 207.221.2260
F: 207.221.2266
Web:www.allied-eng.com

Allied Project No: 12069 | Cad File:

AECOM
1 FEDERAL STREET, 8TH FLOOR
BOSTON, MA 02110
617.723.1700
www.aecom.com

STATE OF MAINE
DEPARTMENT OF TRANSPORTATION

DATE

FED PIN NO: NA

WIN NO: 017163.02 & 017163.03

STATE OF MAINE
CATHERINE A. FAUCHER
No. 7575
LICENSED
PROFESSIONAL ENGINEER

SIGNATURE

P.E. NUMBER 7575

DATE January 17, 2022

PROJECT INFORMATION

PROGRAM	-
PROJECT MANAGER	-
DESIGNER	AECOM
CONSULTANT	ALLIED ENGINEERING
PROJECT RESIDENT	-
CONTRACTOR	-
PROJECT COMPLETION DATE	-

MAINE DEPARTMENT OF TRANSPORTATION
ACADIA GATEWAY FACILITY
INTERMODAL AND WELCOME CENTER

Luminaire Schedules

SHEET NUMBER
EL600

Filename: Division: Date: Username:

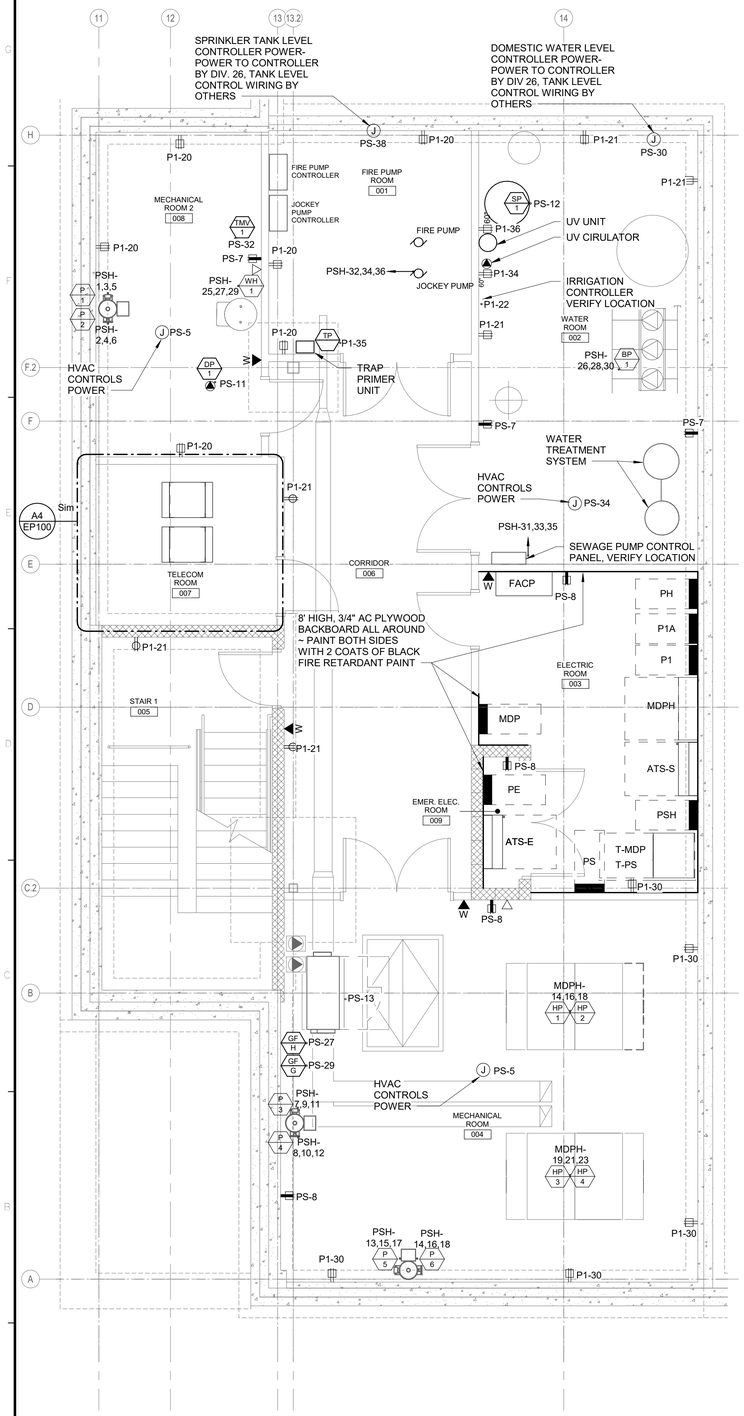

A1 | ENLARGED BASEMENT POWER PLAN

1/4" = 1'-0"

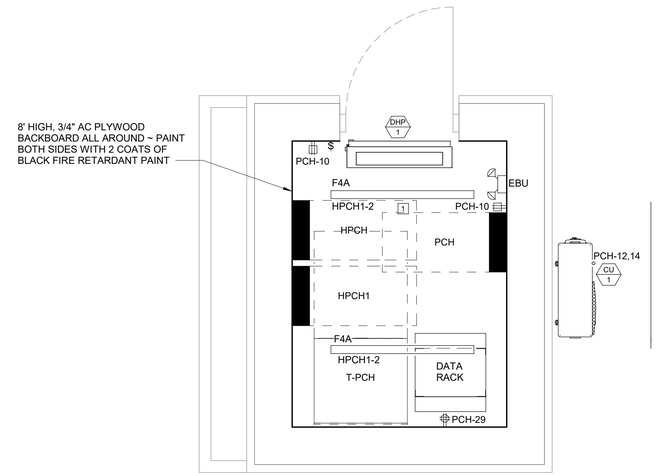

COORDINATE WITH SITE PLAN FOR LOCATION OF EV CHARGING BUILDING - ES100

D4 | EV CHARGING BUILDING - ELECTRICAL ENLARGEMENT

1/2" = 1'-0"

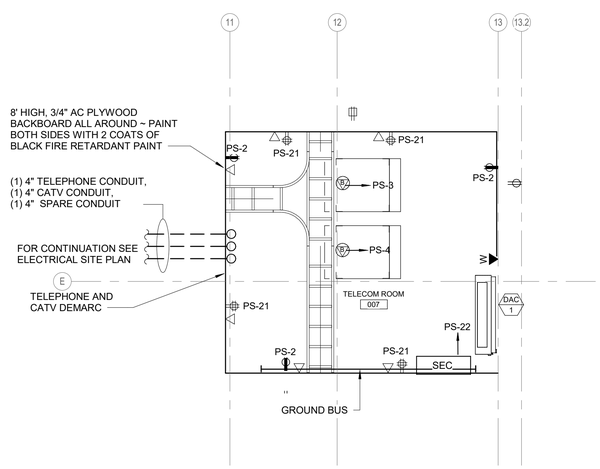

A4 | ENLARGED TEL/COM ROOM

3/8" = 1'-0"

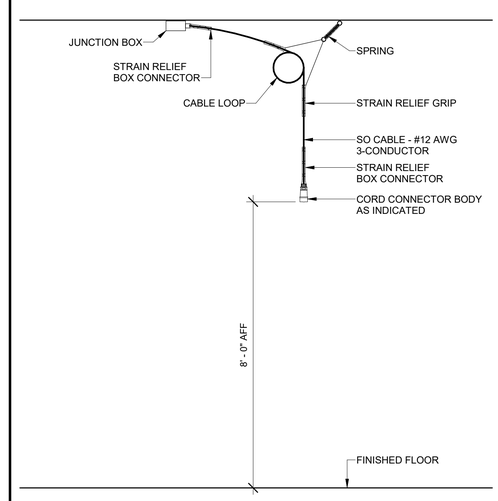

A7 | CORD DROP DETAIL

PROJECT KEY PLAN

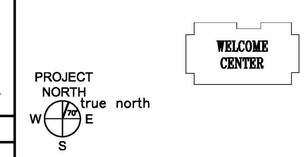

Allied Engineering
Structural Mechanical Electrical Plumbing
160 Veranda Street
Portland, Maine 04103
P: 207.221.2260
F: 207.221.2266
Web: www.allied-eng.com
Allied Project No: 12069 | Cad File:

AECOM
1 FEDERAL STREET, 8TH FLOOR
BOSTON, MA 02110
617.723.1700
www.aecom.com

STATE OF MAINE
DEPARTMENT OF TRANSPORTATION

DATE

FED PIN NO: NA

WIN NO: 017163.02 & 017163.03

STATE OF MAINE
CATHERINE A. FAUCHER
No. 7575
LICENSED PROFESSIONAL ENGINEER

SIGNATURE

P.E. NUMBER 7575

DATE January 17, 2022

PROJECT INFORMATION

PROGRAM	-
PROJECT MANAGER	AECOM
DESIGNER	-
CONSULTANT	ALLIED ENGINEERING
PROJECT RESIDENT	-
CONTRACTOR	-
PROJECT COMPLETION DATE	-

MAINE DEPARTMENT OF TRANSPORTATION
ACADIA GATEWAY FACILITY
INTERMODAL AND WELCOME CENTER

Basement – Power Plan

SHEET NUMBER

EP100

Filename: Date: Division: Username:

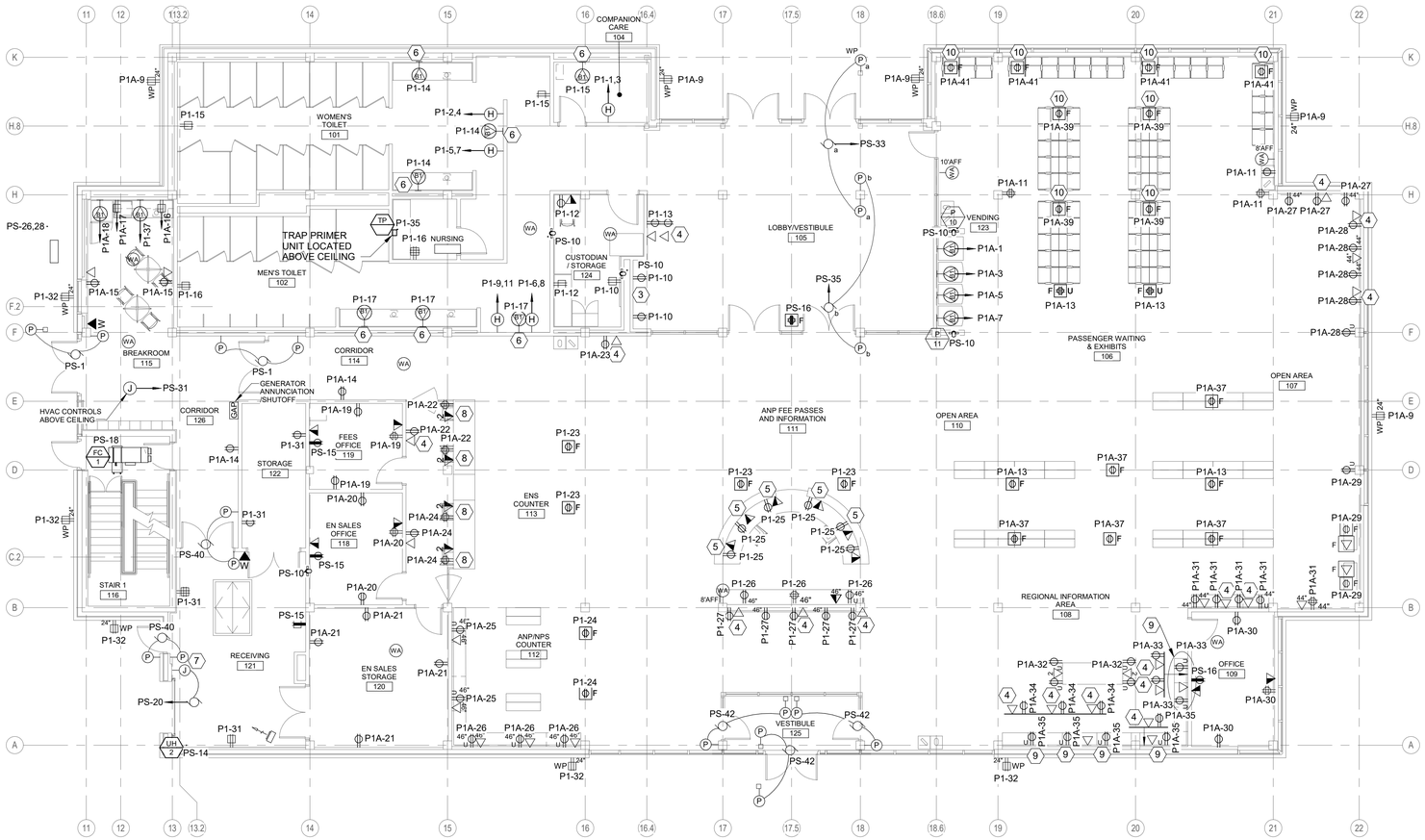

POWER KEY NOTES:

1. PROVIDE POWER ABOVE CEILING FOR MECHANICAL EQUIPMENT CONTROLS/POWER.
2. 3 WAY MANUAL TRANSFER SWITCH FOR PORTABLE GENERATOR.
3. WIRE DOWNSTREAM OF GFI ON CIRCUIT
4. MONITOR(S): (RECEPTACLE AND DATA OUTLET): CONFIRM MOUNTING HEIGHT AND LOCATION PRIOR TO ROUGH IN.
5. LOCATION AND HEIGHT AS DIRECTED BY ARCHITECT. REFER TO SHEET A722 LOCATIONS AND MOUNTING DETAILS.
6. PAPER TOWEL DISPENSER(S): CONFIRM MOUNTING HEIGHT AND LOCATION PRIOR TO ROUGH IN.
7. JUNCTION BOX AT 44"AFF AND 1" CONDUIT FOR DOOR CONTROLS. CONTROLS AND CONTROLS CABLING BY OTHERS.
8. REFER TO SHEET A725 FOR LOCATIONS AND MOUNTING DETAILS.
9. HORIZONTAL OUTLETS AND RECEPTACLES: REFER TO DETAILS 4 AND 5 - SHEET A728 FOR MOUNTING.
10. POWER FOR FUTURE SEATING.

PROJECT KEY PLAN

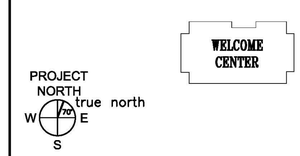

A1 | POWER PLAN - FIRST FLOOR - VISITOR CENTER

1/8" = 1'-0"

Allied Engineering
Structural Mechanical Electrical Plumbing
160 Veranda Street
Portland, Maine 04103
P: 207.221.2260
F: 207.221.2266
Web:www.allied-eng.com

Allied Project No: 12069 | Cad File:

AECOM
1 FEDERAL STREET, 8TH FLOOR
BOSTON, MA 02110
617.723.1700
www.aecom.com

STATE OF MAINE
DEPARTMENT OF TRANSPORTATION

DATE

FED PIN NO: NA

WIN NO: 017163.02 & 017163.03

STATE OF MAINE
CATHERINE A. FAUCHER
No. 7575
LICENSED
PROFESSIONAL ENGINEER

SIGNATURE

P.E. NUMBER 7575

DATE January 17, 2022

PROJECT INFORMATION

PROGRAM	-
PROJECT MANAGER	-
DESIGNER	AECOM
CONSULTANT	ALLIED ENGINEERING
PROJECT RESIDENT	-
CONTRACTOR	-
PROJECT COMPLETION DATE	-

MAINE DEPARTMENT OF TRANSPORTATION
ACADIA GATEWAY FACILITY
INTERMODAL AND WELCOME CENTER

First Floor Visitor Center – Power Plan

SHEET NUMBER
EP101

Filename: Division: Date: Username:

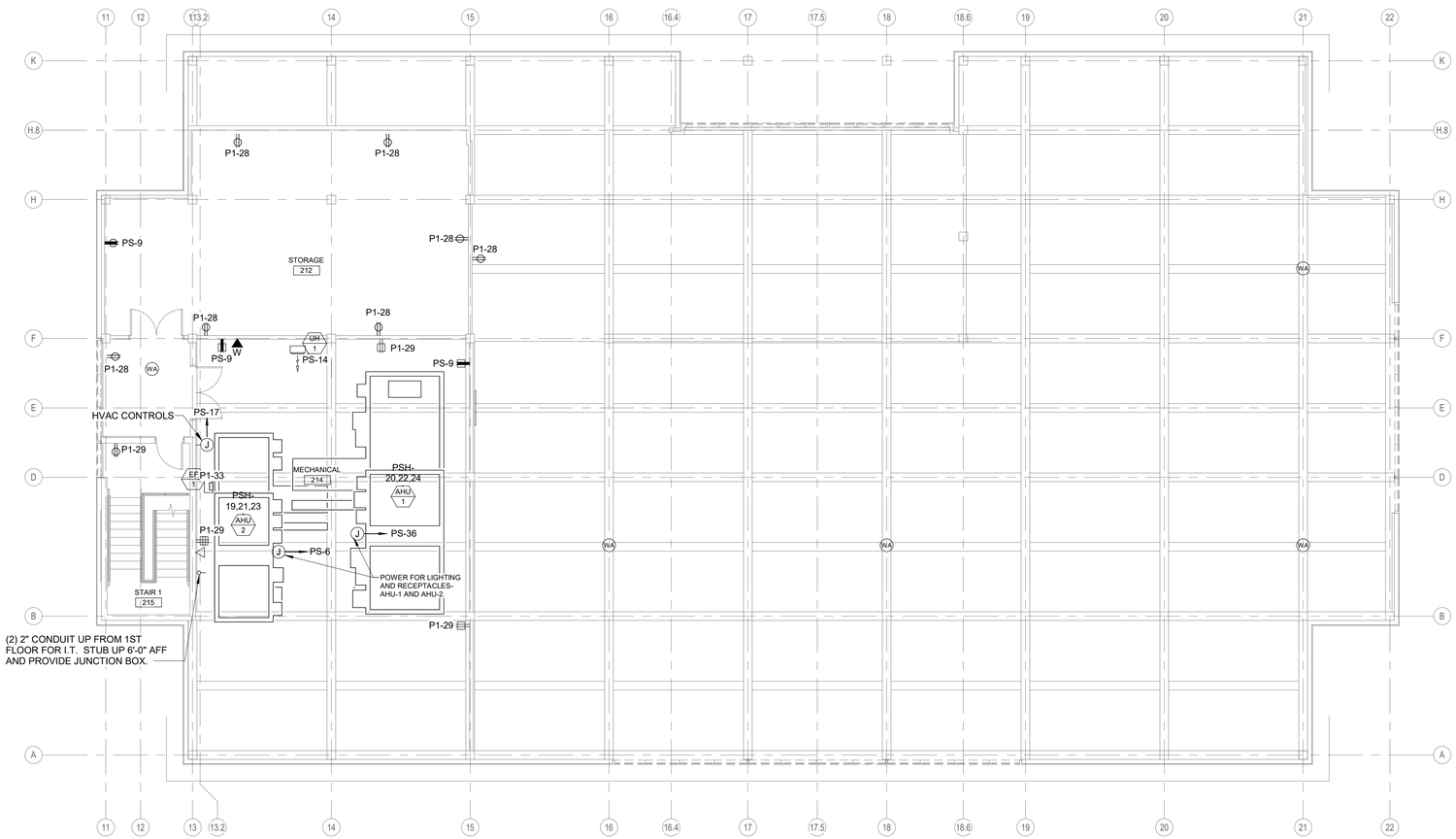

A1	POWER PLAN - SECOND FLOOR - VISITOR CENTER
1/8" = 1'-0"	

PROJECT KEY PLAN

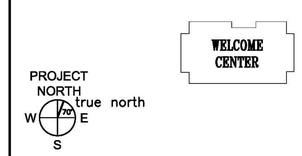

Allied Engineering
Structural Mechanical Electrical Plumbing
160 Veranda Street
Portland, Maine 04103
P: 207.221.2260
F: 207.221.2266
Web:www.allied-eng.com

AECOM
1 FEDERAL STREET, 8TH FLOOR
BOSTON, MA 02110
617.723.1700
www.aecom.com

Allied Project No: 12069 | Cad File:

STATE OF MAINE
DEPARTMENT OF TRANSPORTATION

	DATE

FED PIN NO: NA

WIN NO: 017163.02 & 017163.03

STATE OF MAINE
CATHERINE A. FAUCHER
No. 7575
LICENSED
PROFESSIONAL ENGINEER

SIGNATURE

P.E. NUMBER 7575

DATE January 17, 2022

PROJECT INFORMATION

PROGRAM	-
PROJECT MANAGER	-
DESIGNER	AECOM
CONSULTANT	ALLIED ENGINEERING
PROJECT RESIDENT	-
CONTRACTOR	-
PROJECT COMPLETION DATE	-

MAINE DEPARTMENT OF TRANSPORTATION

ACADIA GATEWAY FACILITY

INTERMODAL AND WELCOME CENTER

Second Floor Visitor Center – Power Plan

SHEET NUMBER

EP102

Filename: Division: Date: Username:

FEEDER SCHEDULE			
TAG	DESCRIPTION	CONDUCTORS (NOTE 1)	CONDUIT (NOTE 2)
1A	125 AMP PRIMARY/FEEDER	(3) #1, (1) #6 G	1 1/4"
1B	125 AMP SECONDARY/FEEDER	(4) #1, (1) #6 G	1 1/2"
1C	125 AMP FEEDER	(4) #1	1 1/2"
2A	225 AMP PRIMARY/FEEDER	(3) #4/0, (1) #4 G	2"
2B	225 AMP SECONDARY/FEEDER	(4) #4/0, (1) #4 G	2 1/2"
4A	400 AMP PRIMARY/FEEDER	(3) 500, (1) #3 G	3"
4B	400 AMP SECONDARY/FEEDER	(4) 500, (1) #3 G	3"
A	UTILITY PRIMARY	PULL STRING FOR USE BY UTILITY	IN EACH OF (2) 5"
B	1200 AMP FEEDER - UNDERGROUND	(4) 600 KCMIL	IN EACH OF (3) 4"
C	600 AMP SECONDARY/FEEDER	(4) 350 KCMIL, (1) #1 G	IN EACH OF (2) 3"
D	800 AMP FEEDER	(4) 600KCMIL	IN EACH OF (2) 4"
E	30 AMP FEEDER	(4) #10, (1) #10 G	1"
F	50 AMP FEEDER	(4) #8	1"
G	50 AMP SECONDARY/FEEDER	(4) #8, (1) # 10 G	1"
H	175 AMP PRIMARY/FEEDER UPSIZED FOR VOLTAGE DROP	(3) #4/0, (1) #4 G	2"
I	600 AMP PRIMARY/FEEDER	(3) 500, (1) #3 G	IN EACH OF (2) 3"
J	METERING CONDUIT TO TEL/COM DEMARC IN BUILDING	PULL STRING FOR USE BY UTILITY	1 1/2"
K	SPARE CONDUIT FROM BSMT ELECTRICAL ROOM TO EV CHARGING BUILDING-NOTE 3	PULL STRING	(2) 4"
L	FIBER BACKBONE FROM EV CHARGING DATA CABINET TO TELCOM 007	12 STRAND FIBER BACKBONE WITH 15' OF SLACK AT EACH END	2"
	FEEDER SCHEDULE NOTES:		
	1. WIRING BASED ON COPPER THWN/THHN		
	2. CONDUIT SIZE BASED ON EMT		
	3. STUB UP IN ELECTRICAL ROOM 24" AFF. CONDUIT SHALL RUN FROM ELECTRICAL ROOM UNDERGROUND TO EV CHARGING BUILDING. STUB UP AT 24" AFG AT PANEV CHARGING PANEL LOCATION.		

NOTES:

1. PROVIDE LOAD SHEDDING CONTROL SUCH THAT ATS-S TRANSFERS TO DEAD NORMAL SOURCE UPON FIRE PUMP CONTROLLER RECEIVING A SIGNAL TO START THE FIRE PUMP
2. ESL STORMSWITCH UL1008 LISTED SUSE 3 WAY MANUAL TRANSFER SWITCH WITH PORTABLE GENERATOR CONNECTION DEVICE RATED 200 AMP, 600 V, 3 POLE, 4 WIRE, NEMA 3R.
3. ESL STORMSWITCH UL1008 LISTED SUSE 3 WAY MANUAL TRANSFER SWITCH WITH PORTABLE GENERATOR CONNECTION DEVICE RATED 100 AMP, 600 V, 3 POLE, 4 WIRE, NEMA 3R.
4. 75 KVA TRANSFORMER: 480 PRIMARY-120/208 SECONDARY, 3 PHASE, 4 WIRE
5. 112 1/2 KVA TRANSFORMER: 480 PRIMARY-120/208 SECONDARY, 3 PHASE, 4 WIRE
6. PROVIDE METER IN PANEL FOR OWNER MONITORING. PROVIDE DATA CABLING AND CONNECTION FROM METER TO DATA NETWORK IN TELCOM 007
7. 112 1/2 KVA TRANSFORMER: 480 PRIMARY-120/208 SECONDARY, 3 PHASE, 4 WIRE, NEMA 4X ENCLOSURE
8. PV METER: METER AND ENCLOSURE FURNISHED AND INSTALLED BY SOLAR INSTALLER. DIV 26 SHALL PROVIDE CONDUIT, WIRING, AND CONNECTIONS. DIV 27 SHALL PROVIDE CATEGORY 6 DATA CABLING IN 3/4" CONDUIT AND CONNECTION FROM METER TO IT ROOM. METER TO BE LOCATED IN MAIN ELECTRICAL ROOM.

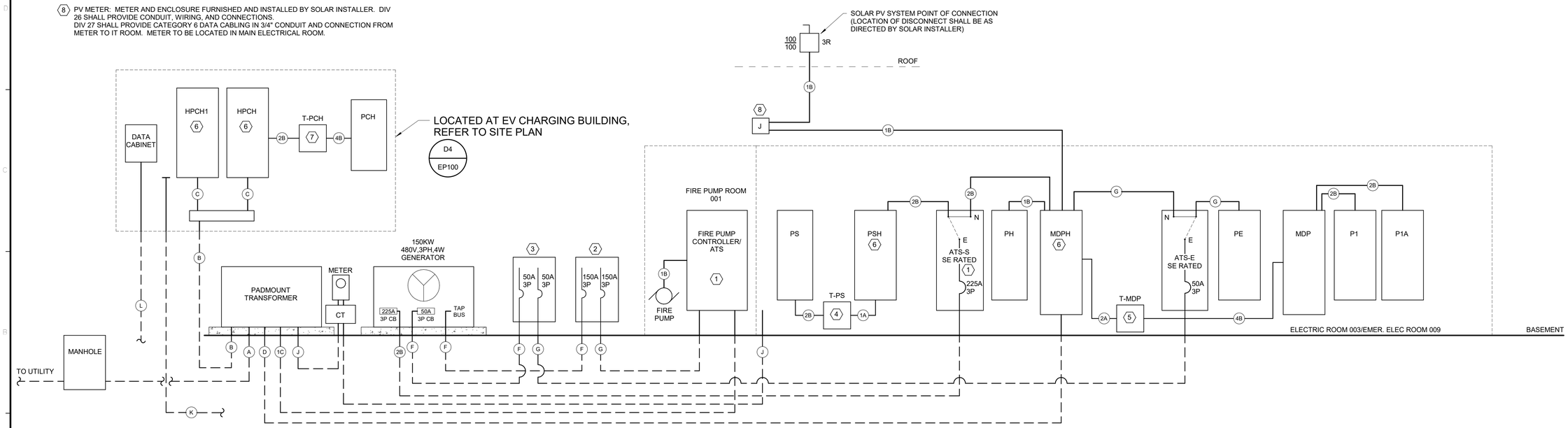

C1 POWER RISER DIAGRAM

NO SCALE

Allied Engineering
Structural Mechanical Electrical Plumbing
160 Veranda Street
Portland, Maine 04103
P: 207.221.2260
F: 207.221.2266
Web: www.allied-eng.com

Allied Project No: 12069 Cad File:

AECOM
1 FEDERAL STREET, 8TH FLOOR
BOSTON, MA 02110
617.723.1700
www.aecom.com

STATE OF MAINE
DEPARTMENT OF TRANSPORTATION

DATE

FED PIN NO: NA

WIN NO: 017163.02 & 017163.03

STATE OF MAINE
CATHERINE A. FAUCHER
No. 7575
LICENSED PROFESSIONAL ENGINEER

SIGNATURE

P.E. NUMBER 7575

DATE January 17, 2022

PROJECT INFORMATION

PROGRAM	-
PROJECT MANAGER	-
DESIGNER	AECOM
CONSULTANT	ALLIED ENGINEERING
PROJECT RESIDENT	-
CONTRACTOR	-
PROJECT COMPLETION DATE	-

MAINE DEPARTMENT OF TRANSPORTATION
ACADIA GATEWAY FACILITY
INTERMODAL AND WELCOME CENTER

Power Riser Diagram

SHEET NUMBER
EP500

Filename: Date: Division: Username:

ELECTRICAL SCHEDULE OF MECHANICAL EQUIPMENT - REFER TO FLOOR PLANS FOR PANEL AND CIRCUIT NUMBERS

TAG	DESCRIPTION	VOLTS	PH	LOAD	MCA	MOPD	DISCONNECT SWITCH					STARTER (NEMA)			WIRING IN CONDUIT	NOTES
							FRAME	POLES	FUSE	NEMA...	FBD	SIZE/...	FBD	CBD		
HP-1/HP-2	HEAT PUMP MULTISTACK MODULE 1	480	3	-	121	150			FWE			VFD	23	23	4# 4/0, 1 #4G,2"C	
HP-3/HP-4	HEAT PUMP MULTISTACK MODULE 2	480	3	-	68	90			FWE			VFD	23	23		
AHU-1	AIR HANDLING UNIT	480	3		51	70					23	VFD	23	23	3#1,1#6G- 1 1/2"C	4
AHU-2	AIR HANDLING UNIT	480	3		11	15					23	FWE	23	23	3#12,1#12G- 3/4"C	
	AHU-1 LIGHTING /RECEPT	120	1	-	-	-	-	-	-	-	-	-	-	-	2#12, 1#12G-3/4"C	6
	AHU-2 LIGHTING/RECEPT	120	1	-	-	-	-	-	-	-	-	-	-	-	2#12, 1#12G-3/4"C	6
DCU-1	SPLIT A/C OUTDOOR UNIT	208	1	-	13	15	30	2	15	3R	26	FWE	23	23	2#12,1#12G- 3/4"C	8
UH-1	UNIT HEATER	120	1	1/6HP	-	-	20	1	NF	1	26	-	-	23	2#12,1#12G- 3/4"C	
UH-2	UNIT HEATER	120	1	1/6HP	-	-	20	1	NF	1	26	-	-	23	2#12,1#12G- 3/4"C	
CU-1	SPLIT A/C OUTDOOR UNIT - EV BUILDING	208	1	-	18	20	30	2	20	3R	26	FWE	23	23	2#12,1#12G- 3/4"C	8
ERU-1	ENERGY RECOVERY UNIT	120	1	-	3	3			FWE			FWE	23	23	2#12,1#12G- 3/4"C	
EF-1	EXHAUST FAN	120	1	1/3HP	-	-	20	1	NF	3R	26	0	26	23	2#12,1#12G- 3/4"C	
GF-H	GLYCOL FEED - HOT/CHILLED	120	1	(1/3HP							23			23	2#12,1#12G- 3/4"C	5
GF-G	GLYCOL FEED - GEOTHERMAL	120	1	1/3/HP							23			23	2#12,1#12G- 3/4"C	5
P-1	CHILLED WATER	480	3	7.5HP	-	-	30	3	15	1	26	23	23	23	3#12,1#12G- 3/4"C	1
P-2	CHILLED WATER	480	3	7.5HP	-	-	30	3	15	1	26	23	23	23	3#12,1#12G- 3/4"C	1
P-3	HEATING WATER	480	3	3HP	-	-	30	3	15	1	26	23	23	23	3#12,1#12G- 3/4"C	1
P-4	HEATING WATER	480	3	3HP	-	-	30	3	15	1	26	23	23	23	3#12,1#12G- 3/4"C	1
P-5	WELL PUMPS - GEOTHERMAL	480	3	7.5HP	-	-	30	3	15	1	26	22	22	23	3#12,1#12G- 3/4"C	1
P-6	WELL PUMPS - GEOTHERMAL	480	3	7.5HP	-	-	30	3	15	1	26	22	22	23	3#12,1#12G- 3/4"C	1
P-7	RADIANT ZONE #1 (RFM-1)	120	1	87W	-	-	20	1	NF	1	26	23	23	23	2#12,1#12G- 3/4"C	
P-8	RADIANT ZONE 2 (RFM-2)	120	1	87W	-	-	20	1	NF	1	26	23	23	23	2#12,1#12G- 3/4"C	
P-9	RADIANT ZONE #3 (RFM-3)	120	1	87W	-	-	20	1	NF	1	26	23	23	23	2#12,1#12G- 3/4"C	
P-10	RADIANT ZONE #4A (RFM 4A)	120	1	197W	-	-	20	1	NF	1	26	23	23	23	2#12,1#12G- 3/4"C	
P-11	RADIANT ZONE #4B (RFM 4B)	120	1	197W	-	-	20	1	NF	1	26	23	23	23	2#12,1#12G- 3/4"C	
DP-1	DHW RECIRC PUMP	120	1	1/8HP	-	-	20	1	NF	1	26	0	26	23	2#12,1#12G- 3/4"C	
WH-1	DHW HEATER	480	3	9kW	10.8	20	30	3	20	1	26	23	23	23	3#12,1#12G- 3/4"C	
FC-1	FAN COIL UNIT	120	1	1/3HP	3.8	-	MRT	1	-	1	26	-	-	23	2#12,1#12G- 3/4"C	
SP-1	SUMP PUMP	120	1	0.4 HP	9.8	20					23			23	2#12,1#12G- 3/4"C	5
	DUPLEX SEWAGE PUMPS	480	3	(2) 1HP	-	-					22	FWE	22	23	3#12,1#12G- 3/4"C	7
	FIRE JOCKEY PUMP	480	3	1HP	-		30	3	15	1	26	FWE	21	21	3#12,1#12G- 3/4"C	10
	WELL PUMP - DOMESTIC WATER	208	3	5HP	18	30	30	3	30	3R	26	FWE	22	23	3#8,1#10G- 3/4"C	
BP-1	DOMESTIC WATER BOOSTER PUMPS	480	3	(3) 7 .5 HP	-	-	60	3	40	1	26	FWE	22	23	3#8,1#8G- 1"C	2
TP	TRAP PRIMER	120	1		1	20					23			23	2#12,1#12G- 3/4"C	5
TMV	DIGITAL MIXING VAVLE	120	1	1180	10	20										

	NOTES
1	LEAD/LAG
2	BOOSTER PUMPS RUN IN PARALLEL
3	PROVIDE AND LOCATE COMPONENTS AS REQUIRED BY NEC ARTICLE 680.
4	SMOKE DETECTOR FBD 26, INSTALLED BY DIV 23, WIRED TO FA BY DIV 26
5	PLUG- IN RECEPTACLE
6	WIRE AND CONNECT FACTORY INSTALLED RECEPTACLES, LIGHTING AND LIGHT SWITCH.
7	INDICATED BRANCH CIRCUIT WIRING IS TYPICAL FROM PANEL TO CONTROLLER AND CONTROLLER TO PUMP FOR EACH MOTOR
8	INDICATED WIRING IS FOR OUTDOOR CONDENSING UNIT WIRED BY DIV 26. WIRING AND CONNECTION FROM OUTDOOR UNIT TO...
9	NOT USED
10	WIRE PUMP VIA CONTROLLER

ABBREVIATIONS:

FWE	FURNISHED WITH EQUIPMENT
NF	NOT FUSED
SWBD	SWITCHBOARD
FBD	FURNISHED BY DIVISION
CBD	CONTROL WIRING BY DIVISION
MRT	MOTOR RATED TOGGLE SWITCH

A1 SCHEDULES

Allied Engineering
Structural Mechanical Electrical Plumbing
160 Veranda Street
Portland, Maine 04103
P: 207.221.2260
F: 207.221.2266
Web: www.allied-eng.com
Allied Project No: 12069 | Cad File:

AECOM
1 FEDERAL STREET, 8TH FLOOR
BOSTON, MA 02110
617.723.1700
www.aecom.com

STATE OF MAINE
DEPARTMENT OF TRANSPORTATION

DATE

FED PIN NO: NA
WIN NO: 017163.02 & 017163.03

STATE OF MAINE CATHERINE A. FAUCHER No. 7575 LICENSED PROFESSIONAL ENGINEER

SIGNATURE

P.E. NUMBER 7575

DATE January 17, 2022

PROJECT INFORMATION

PROGRAM	-
PROJECT MANAGER	-
DESIGNER	AECOM
CONSULTANT	ALLIED ENGINEERING
PROJECT RESIDENT	-
CONTRACTOR	-
PROJECT COMPLETION DATE	-

MAINE DEPARTMENT OF TRANSPORTATION
ACADIA GATEWAY FACILITY
INTERMODAL AND WELCOME CENTER

Electrical Schedules

SHEET NUMBER
EP600

Username:
Division:
Date:
Filename:

Lighting and Appliance Panelboard: MDPH

Location:
Supply From:
Mounting: Surface

Volts: 480/277 Wye
Phases: 3
Wires: 4

A.I.C. Rating: 50kAIC
Mains Type: MCB
Bus Rating: 800 A
MCB Rating: 800 A

CKT	Circuit Description	Trip Amps	Poles	A (kVA)		B (kVA)		C (kVA)		Poles	Trip Amps	Circuit Description	CKT
1				22.2	0.9								2
3	T-MDP/PANEL MDP	225	3			20	1.6			3	50	ATS-E/PANEL PE	4
5								21.7	0.5				6
7				2.8	49.9								8
9	PH PANEL	125	3			4	51			3	225	ATS-S/PANEL PS	10
11								4.9	48.5				12
13				0	33.5								14
15	SOLAR PV METER AND ENCLOSURE	100	3			0	33.5			3	150	HVAC - HP1 THRU HP4	16
17								0	33.5				18
19				18.8	--								20
21	HVAC - HP3/HP4	90	3			18.8	--			3	--	Space	22
23								18.8	--				24
25				--	--								26
27	Space	--	3			--	--			3	--	Space	28
29								--	--				30
			Total Load:	128.2 kVA		129.0 kVA		128.0 kVA					
			Total Amp:	463 A		466 A		462 A					

Notes:

Lighting and Appliance Panelboard: PSH

Location:
Supply From: ATS-S
Mounting: Surface

Volts: 480/277 Wye
Phases: 3
Wires: 4

A.I.C. Rating: 50kAIC
Mains Type: MLO
Bus Rating: 225 A
MCB Rating:

CKT	Circuit Description	Trip Amps	Poles	A (kVA)		B (kVA)		C (kVA)		Poles	Trip Amps	Circuit Description	CKT
1				3	0								2
3	CHILLED WATER PUMP P1(LEAD/LAG)	15	3			3	0			3	15	CHILLED WATER PUMP P2(LEAD/LAG)	4
5								3	0				6
7	HEATING WATER PUMP			1.4	0							HEATING WATER PUMP	8
9	P-3(LEAD/LAG)	15	3			1.4	0			3	15	P-4(LEAD/LAG)	10
11								1.4	0				12
13				3	0								14
15	WELL PUMP P-5(LEAD/LAG)	15	3			3	0			3	15	WELL PUMP P-6(LEAD/LAG)	16
17								3	0				18
19				3	14.1								20
21	HVAC - AHU-2	15	3			3	14.1			3	70	HVAC - AHU-1	22
23								3	14.1				24
25				3	8.3								26
27	HVAC - WH-1	20	3			3	8.3			3	40	BP-1 - WATER BOOSTER PUMP	28
29								3	8.3				30
31				0.6	0.6								32
33	DUPLEX SEWAGE PUMPS	15	3			0.6	0.6			3	15	FIRE JOCKEY PUMP	34
35								0.6	0.6				36
37				--	12.7								38
39	Space	--	3			--	13.9			3	125	T-PS/PANEL PS	40
41								--	11.3				42
			Total Load:	49.9 kVA		51.0 kVA		48.5 kVA					
			Total Amp:	181 A		185 A		175 A					

Notes:

Lighting and Appliance Panelboard: PH

Location:
Supply From: MDPH
Mounting: Surface

Volts: 480/277 Wye
Phases: 3
Wires: 4

A.I.C. Rating: 30kAIC
Mains Type: MLO
Bus Rating: 100 A
MCB Rating:

CKT	Circuit Description	Trip Amps	Poles	A (kVA)		B (kVA)		C (kVA)		Poles	Trip Amps	Circuit Description	CKT
1	Stair Lighting via LCP	20	1	0.6	0.3					1	20	LTG- BASEMENT	2
3	LTG- 1ST FLOOR & EXTERIOR	20	1			2.1	1.8			1	20	LTG- 1ST FLOOR OPEN AREA	4
5	LTG- ROOF PEAK NORTH UPLIGHTS	20	1					2.1	2.1	1	20	LTG- ROOF PEAK SOUTH UPLIGHTS	6
7	LTG- 2ND FLOOR & OPEN AREA	20	1	1.2	0					1	20	Spare	8
9	LTG- CONTROL PANEL LCP1	20	1			0	0			1	20	Spare	10
11	LTG - BUS SHELTER	20	1					0.7	0	1	20	Spare	12
13	LTG - KIOSK	20	1	0.7	0					1	20	Spare	14
15	Spare	20	1			0	0			1	20	Spare	16
17	Spare	20	1					0	0	1	20	Spare	18
19	Spare	20	1	0	0					1	20	Spare	20
21	Spare	20	1			0	0			1	20	Spare	22
23	Spare	20	1					0	0	1	20	Spare	24
25	Spare	20	1	0	0					1	20	Spare	26
27	Spare	20	1			0	0			1	20	Spare	28
29	Spare	20	1					0	0	1	20	Spare	30
			Total Load:	2.8 kVA		4.0 kVA		4.9 kVA					
			Total Amp:	10 A		15 A		18 A					

Notes:

Lighting and Appliance Panelboard: PE

Location:
Supply From: ATS-E
Mounting: Surface

Volts: 480/277 Wye
Phases: 3
Wires: 4

A.I.C. Rating: 42kAIC
Mains Type: MLO
Bus Rating: 100 A
MCB Rating:

CKT	Circuit Description	Trip Amps	Poles	A (kVA)		B (kVA)		C (kVA)		Poles	Trip Amps	Circuit Description	CKT
1	Stair Lighting via LCP	20	1	0.6	0.3					1	20	EM LTG- BASEMENT	2
3	EM LTG- 1ST FLOOR	20	1			0.8	0.8			1	20	EM LTG- 2ND FLOOR	4
5	EM LTG - BUS SHELTER	20	1					0.3	0.3	1	20	EM LTG - KIOSK	6
7	Spare	20	1	0	0					1	20	Spare	8
9	Spare	20	1			0	0			1	20	Spare	10
11	Spare	20	1					0	0	1	20	Spare	12
13	Spare	20	1	0	0					1	20	Spare	14
15	Spare	20	1			0	0			1	20	Spare	16
17	Spare	20	1					0	0	1	20	Spare	18
19	Spare	20	1	0	0					1	20	Spare	20
			Total Load:	0.9 kVA		1.6 kVA		0.5 kVA					
			Total Amp:	3 A		6 A		2 A					

Notes:

Allied Engineering
Structural Mechanical Electrical Plumbing
160 Veranda Street
Portland, Maine 04103
P: 207.221.2260
F: 207.221.2266
Web:www.allied-eng.com

Allied Project No: 12069 | Cad File:

AECOM
1 FEDERAL STREET, 8TH FLOOR
BOSTON, MA 02110
617.723.1700
www.aecom.com

STATE OF MAINE
DEPARTMENT OF TRANSPORTATION

DATE

FED PIN NO: NA

WIN NO: 017163.02 & 017163.03

STATE OF MAINE
CATHERINE A. FAUCHER
No. 7575
LICENSED
PROFESSIONAL ENGINEER

SIGNATURE

P.E. NUMBER 7575

DATE January 17, 2022

PROJECT INFORMATION

PROGRAM	-
PROJECT MANAGER	-
DESIGNER	AECOM
CONSULTANT	ALLIED ENGINEERING
PROJECT RESIDENT	-
CONTRACTOR	-
PROJECT COMPLETION DATE	-

MAINE DEPARTMENT OF TRANSPORTATION
ACADIA GATEWAY FACILITY
INTERMODAL AND WELCOME CENTER

Electrical Schedules

SHEET NUMBER
EP601

Filename: Date: Division: Username:

Lighting and Appliance Panelboard: MDP

Location:
Supply From: T-MDP
Mounting: Surface

Volts: 120/208 Wye
Phases: 3
Wires: 4

A.I.C. Rating: 42kAIC
Mains Type: MCB
Bus Rating: 400 A
MCB Rating: 400 A

CKT	Circuit Description	Trip Amps	Poles	A (kVA)		B (kVA)		C (kVA)		Poles	Trip Amps	Circuit Description	CKT
1				11.5	10.8								2
3	P1 PANEL	225	3			9.7	10.3			3	225	P1A PANEL	4
5								9.6	12.1				6
7				0	--								8
9	Spare	225	3			0	--			3	--	Space	10
11								0	--				12
13				--	--								14
15	Space	--	3			--	--			3	--	Space	16
17								--	--				18
19				0	--								20
21	Spare	100	3			0	--			3	--	Space	22
23								0	--				24
25				0	0								26
27	Spare	100	3			0	0			3	225	Spare	28
29								0	0				30
			Total Load:	22.2 kVA		20.0 kVA		21.7 kVA					
			Total Amp:	187 A		167 A		183 A					

Notes:

Lighting and Appliance Panelboard: P1A

Location:
Supply From: MDP
Mounting: Surface

Volts: 120/208 Wye
Phases: 3
Wires: 4

A.I.C. Rating: 42kAIC
Mains Type: MLO
Bus Rating: 225 A
MCB Rating:

CKT	Circuit Description	Trip Amps	Poles	A (kVA)		B (kVA)		C (kVA)		Poles	Trip Amps	Circuit Description	CKT
1	VENDING MACHINE 123	20	1	0.8	0					1	20	Spare	2
3	VENDING MACHINE 123	20	1			0.8	0.2			1	20	FLAG POLE & SIGN LIGHTS	4
5	VENDING MACHINE 123	20	1					0.8	1.8	2	20	PARKING LOT POLES LIGHTS	6
7	VENDING MACHINE 123	20	1	0.8	1.8								8
9	Receptacles - Exterior	20	1			0.9	1.2			2	20	PARKING LOT POLES LIGHTS	10
11	Receptacles - 106	20	1					0.9	1.2				12
13	Floor Receptacles	20	1	1.4	0.4					1	20	Receptacles - 114,126, 113	14
15	Receptacles - Breakroom 115	20	1			0.4	1.2			1	20	Receptacles - Breakroom 115	16
17	Receptacles - Breakroom 115	20	1					1.2	1.2	1	20	Receptacles - Breakroom 115	18
19	Receptacle - Fees Office 119	20	1	0.7	0.7					1	20	Receptacles - En Sales Office 118	20
21	Receptacle - En Sales Storage 120	20	1			0.7	0.9			1	20	Receptacles	22
23	Receptacles - Monitors	20	1					0.2	0.9	1	20	Receptacles - 113	24
25	Receptacle	20	1	0.4	0.5					1	20	Receptacle	26
27	Receptacles	20	1			0.5	0.9			1	20	Receptacle	28
29	Receptacles	20	1					0.9	0.7	1	20	Receptacles - Office 109	30
31	Receptacle	20	1	1.1	0.4					1	20	Receptacle	32
33	Receptacle	20	1			0.7	0.5			1	20	Receptacle	34
35	Receptacle	20	1					0.9	0	1	20	Spare	36
37	Receptacles - Floor Boxes	20	1	1.8	0					1	20	Spare	38
39	Receptacles - Floor Boxes	20	1			1.4	0			1	20	Spare	40
41	Receptacles - Floor Boxes	20	1					1.4	0	1	20	Spare	42
43	Spare	20	1	0	0					1	20	Spare	44
45	Spare	20	1			0	0			1	20	Spare	46
47	Spare	20	1					0	0	1	20	Spare	48
49	Spare	20	1	0	0					1	20	Spare	50
51	Spare	20	1			0	0			1	20	Spare	52
53	Spare	20	1					0	0	1	20	Spare	54
			Total Load:	10.8 kVA		10.3 kVA		12.1 kVA					
			Total Amp:	90 A		86 A		101 A					

Notes:

Lighting and Appliance Panelboard: P1

Location:
Supply From: MDP
Mounting: Surface

Volts: 120/208 Wye
Phases: 3
Wires: 4

A.I.C. Rating: 42kAIC
Mains Type: MLO
Bus Rating: 225 A
MCB Rating:

CKT	Circuit Description	Trip Amps	Poles	A (kVA)		B (kVA)		C (kVA)		Poles	Trip Amps	Circuit Description	CKT
1	HAND DRYER 104	20	2	1.1	1.1					2	20	HAND DRYER 101	2
3						1.1	1.1						4
5	HAND DRYER 101	20	2					1.1	1.1	2	20	HAND DRYER 102	6
7				1.1	1.1								8
9	HAND DRYER 102	20	2			1.1	0.5			1	20	Receptacle - Water Cooler 105, 124	10
11								1.1	0.4	1	20	Receptacle 124	12
13	Receptacles - Lobby/Vest 105	20	1	0.4	0.5					1	20	Receptacle - Paper Towel Disp 101	14
15	Receptacle - 101, 104	20	1			0.5	0.5			1	20	Receptacle - Nursing, Mens 102	16
17	Receptacle -Mens 101 Paper Towel Disp	20	1					0.5	1	1	20	Power - Bus Shelter & Bottle Filler Station	18
19	LTG- 1ST FLOOR OPEN AREA...	20	1	0.3	1.1					1	20	Receptacles -001,008	20
21	Receptacles - 002,006	20	1			1.1	0.5			1	20	HVAC - IRRIGATION CONTROLLER	22
23	Receptacles - floor 111	20	1					1.4	0.7	1	20	Receptacles - floor 111	24
25	Receptacles - Counter	20	1	1.1	0.7					1	20	Receptacles - 111	26
27	Receptacles - 111	20	1			0.9	1.3			1	20	Receptacles - Second Floor	28
29	Receptacle - Mech 214	20	1					0.9	0.9	1	20	Receptacle - 004	30
31	Receptacles - 121, 122	20	1	0.9	0.9					1	20	Receptacles - Exterior	32
33	HVAC - EF-1 FAN	15	1			0.9	0.2			1	20	Receptacle - UV CIRC PUMP	34
35	HVAC - TRAP PRIMERS	20	1					0.2	0.2	1	20	Receptacle - UV LIGHT	36
37	DISHWASHER	20	1	1.2	0					1	20	Spare	38
39	Spare	20	1			0	0			1	20	Spare	40
41	Spare	20	1					0	0	1	20	Spare	42
43	Spare	20	1	0	0					1	20	Spare	44
45	Spare	20	1			0	0			1	20	Spare	46
47	Spare	20	1					0	0	1	20	Spare	48
49	Spare	20	1	0	0					1	20	Spare	50
51	Spare	20	1			0	0			1	20	Spare	52
53	Spare	20	1					0	0	1	20	Spare	54
			Total Load:	11.5 kVA		9.7 kVA		9.6 kVA					
			Total Amp:	96 A		81 A		80 A					

Notes:

Lighting and Appliance Panelboard: PS

Location:
Supply From: T-PS
Mounting: Surface

Volts: 120/208 Wye
Phases: 3
Wires: 4

A.I.C. Rating: 20kAIC
Mains Type: MCB
Bus Rating: 225 A
MCB Rating: 225 A

CKT	Circuit Description	Trip Amps	Poles	A (kVA)		B (kVA)		C (kVA)		Poles	Trip Amps	Circuit Description	CKT
1	Power Doors 114 & 115	20	1	1	0.5					1	20	Receptacle TELECOM ROOM 007	2
3	Receptacle - TELECOM ROOM 107	20	1			1.4	1.9			1	20	Receptacle - TELECOM ROOM 107	4
5	HVAC CONTROLS POWER	20	1					1	0.5	1	20	HVAC - AHU-2 LIGHTING/RECEPTS	6
7	Receptacles - 001,002,008	20	1	0.5	0.7					1	20	Receptacles - 003,004,009	8
9	Receptacles - Second Floor	20	1			0.5	0.7			1	20	HVAC -RADIANT P-7,8,9,10,11	10
11	HVAC - P-DP-1	20	1					0.5	1.2	1	20	HVAC - SP-1	12
13	HVAC - ERU-1	15	1	0.5	1.1					1	20	HVAC - UH-1/UH-2	14
15	Receptacles - 118,119,121	20	1			0.5	0.5			1	20	Receptacle - 109 Office	16
17	HVAC CONTROLS	20	1					0.5	0.5	1	15	HVAC - FC-1	18
19	Fire Alarm Control Panel	20	1	0.5	1					1	20	Power - OVERHEAD COILING DOOR	20
21	Receptacle - 007	20	1			1.4	0.4			1	20	Security Alarm Panel	22
23	GENERATOR JACKET WATER HEATER	20	2					0.8	0.4	1	20	GENERATOR BATTERY CHARGER	24
25				0.8	1.4					2	15	HVAC - DCU-1	26
27	HVAC - GF-H	15	1			0.9	1.4						28
29	HVAC - GF-G	15	1					0.9	0.5	1	20	DOMESTIC WATER LEVEL...	30
31	HVAC CONTROLS POWER	20	1	0.5	1.2					1	20	HVAC - TMV - MIXING VAVLE	32
33	Power DOOR OPERATOR	20	1			0.5	0.5			1	20	HVAC - CONTROLS POWER	34
35	Power DOOR OPERATOR	20	1					0.5	0.5	1	20	HVAC - AHU-1 LIGHTING/RECEPTS	36
37	GEOTHERMAL VAULT POWER	20	1	0.4	0.5					1	20	SPRINKLER TANK LEVEL	38
39	WELL PUMP - DOMESTIC WATER	30	3			2.2	1			1	20	Power Doors 121A & 121B	40
41								2.2	1.5	1	20	Power Door 125A, 125B & 125C	42
43				2.2	0					1	20	Door Controller Power	44
45	Spare	20	1			0	0			1	20	Spare	46
47	Spare	20	1					0	0	1	20	Spare	48
49	Spare	20	1	0	0					1	20	Spare	50
51	Spare	20	1			0	0			1	20	Spare	52
53	Spare	20	1					0	0	1	20	Spare	54
			Total Load:	12.7 kVA		13.9 kVA		11.3 kVA					
			Total Amp:	108 A		118 A		95 A					

Notes:

Allied Engineering
Structural Mechanical Electrical Plumbing
160 Veranda Street
Portland, Maine 04103
P: 207.221.2260
F: 207.221.2266
Web:www.allied-eng.com

Allied Project No: 12069 | Cad File: ?

AECOM
1 FEDERAL STREET, 8TH FLOOR
BOSTON, MA 02110
617.723.1700
www.aecom.com

STATE OF MAINE
DEPARTMENT OF TRANSPORTATION

DATE

FED PIN NO: NA

WIN NO: 017163.02 & 017163.03

STATE OF MAINE
CATHERINE A. FAUCHER
No. 7575
LICENSED
PROFESSIONAL ENGINEER

SIGNATURE

P.E. NUMBER 7575

DATE January 17, 2022

PROJECT INFORMATION

PROGRAM -
PROJECT MANAGER -
DESIGNER AECOM
CONSULTANT ALLIED ENGINEERING
PROJECT RESIDENT -
CONTRACTOR -
PROJECT COMPLETION DATE -

MAINE DEPARTMENT OF TRANSPORTATION
ACADIA GATEWAY FACILITY
INTERMODAL AND WELCOME CENTER

Electrical Schedules

SHEET NUMBER
EP602

Filename: Division: Date: Username:

Lighting and Appliance Panelboard: HPCH

Location:
Supply From:
Mounting: Surface

Volts: 480/277 Wye
Phases: 3
Wires: 4

A.I.C. Rating: 42kAIC
Mains Type: MCB
Bus Rating: 600 A
MCB Rating: 600 A

CKT	Circuit Description	Trip Amps	Poles	A (kVA)		B (kVA)		C (kVA)		Poles	Trip Amps	Circuit Description	CKT
1				22	--								2
3	LEVEL 3 CHARGER	100	3			22	--			3	--	Space	4
5								22	--				6
7				22	--								8
9	LEVEL 3 CHARGER	100	3			22	--			3	--	Space	10
11								22	--				12
13				22	--								14
15	LEVEL 3 CHARGER	100	3			22	--			3	--	Space	16
17								22	--				18
19				22	--								20
21	LEVEL 3 CHARGER	100	3			22	--			3	--	Space	22
23								22	--				24
25				33.6	--								26
27	T-PCH / PANEL PCH	225	3			29.3	--			3	--	Space	28
29								24.5	--				30
			Total Load:	121.6 kVA		117.3 kVA		112.5 kVA					
			Total Amp:	442 A		426 A		406 A					

Notes:
NEMA 3R

Lighting and Appliance Panelboard: HPCH1

Location:
Supply From:
Mounting: Surface

Volts: 480/277 Wye
Phases: 3
Wires: 4

A.I.C. Rating: 42kAIC
Mains Type: MCB
Bus Rating: 600 A
MCB Rating: 600 A

CKT	Circuit Description	Trip Amps	Poles	A (kVA)		B (kVA)		C (kVA)		Poles	Trip Amps	Circuit Description	CKT
1				22	0					1	20	Lighting - EV CHARGE BLDG	2
3	LEVEL 3 CHARGER	100	3			22	0			1	20	Spare	4
5								22	0	1	20	Spare	6
7				22	--								8
9	LEVEL 3 CHARGER	100	3			22	--			3	--	Space	10
11								22	--				12
13				22	--								14
15	LEVEL 3 CHARGER	100	3			22	--			3	--	Space	16
17								22	--				18
19				22	--								20
21	LEVEL 3 CHARGER	100	3			22	--			3	--	Space	22
23								22	--				24
25				--	--								26
27	Space	--	3			--	--			3	--	Space	28
29								--	--				30
			Total Load:	88.0 kVA		88.0 kVA		88.0 kVA					
			Total Amp:	318 A		318 A		318 A					

Notes:
NEMA 3R

Lighting and Appliance Panelboard: PCH

Location:
Supply From: T-PCH
Mounting: Surface

Volts: 120/208 Wye
Phases: 3
Wires: 4

A.I.C. Rating: 30kAIC
Mains Type: MCB
Bus Rating: 400 A
MCB Rating: 400 A

CKT	Circuit Description	Trip Amps	Poles	A (kVA)		B (kVA)		C (kVA)		Poles	Trip Amps	Circuit Description	CKT
1	LEVEL 2 CHARGER	50	2	4.8	4.8					2	50	LEVEL 2 CHARGER	2
3						4.8	4.8						4
5	LEVEL 2 CHARGER	50	2					4.8	4.8	2	50	LEVEL 2 CHARGER	6
7				4.8	4.8								8
9	LEVEL 2 CHARGER	50	2			4.8	0.4			1	20	RECEPTS AT EV CHARGER BUILDING	10
11								4.8	0	2	20	HVAC - CU-1 EV BUILDING	12
13	LEVEL 2 CHARGER	50	2	4.8	0								14
15						4.8	0.1			2	20	Lighting - Exterior EV Building	16
17	LEVEL 2 CHARGER	50	2					4.8	0.1				18
19				4.8	0					1	20	Spare	20
21	LEVEL 2 CHARGER	50	2			4.8	0			1	20	Spare	22
23								4.8	0	1	20	Spare	24
25	LEVEL 2 CHARGER	50	2	4.8	0					1	20	Spare	26
27						4.8	0			1	20	Spare	28
29	Receptacle - DATA RACK	20	1					0.4	0	1	20	Spare	30
			Total Load:	33.6 kVA		29.3 kVA		24.5 kVA					
			Total Amp:	286 A		250 A		204 A					

Notes:
NEMA 3R

BRANCH CIRCUITS SCHEDULE	
CIRCUIT BREAKER	CONDUCTOR
120 OR 277 VOLT, 1 PH., 2W CIRCUITS	
15A-1P, 20A-1P	2#12 & 1#12 GND - 3/4" C.
30A-1P	2#10 & 1#10 GND - 3/4" C.
40A-1P	2#8 & 1#10 GND - 3/4" C.
50A-1P	2#6 & 1#10 GND - 3/4" C.
60A-1P	2#6 & 1#10 GND - 3/4" C.
208 OR 480 VOLT, 1PH., 2W CIRCUITS	
15A-2P, 20A-2P	2#12 & 1#12 GND - 3/4" C.
30A-2P	2#10 & 1#10 GND - 3/4" C.
40A-2P	2#8 & 1#10 GND - 3/4" C.
50A-2P	2#6 & 1#10 GND - 3/4" C.
60A-2P	2#6 & 1#10 GND - 3/4" C.
208 OR 480 VOLT, 3PH., 3W CIRCUITS	
15A-3P, 20A-3P	3#12 & 1#12 GND - 3/4" C.
30A-3P	3#10 & 1#10 GND - 3/4" C.
40A-3P	3#8 & 1#10 GND - 3/4" C.
50A-3P	3#6 & 1#10 GND - 3/4" C.
60A-3P	3#6 & 1#10 GND - 3/4" C.

BRANCH CIRCUIT SCHEDULE NOTES:

1. TYPE MC CABLE SHALL INCLUDE FULL SIZE INSULATED GROUND CONDUCTOR. SIZES AS INDICATED IN SCHEDULE.
2. WIRING BASED ON MAXIMUM FEEDER LENGTH OF 150 FEET FOR 120 VOLT CIRCUITS AND 300 FEET FOR 277 VOLT CIRCUITS.
3. UPGRADE WIRE AND CONDUIT SIZE AS REQUIRED TO ADDRESS VOLTAGE DROP.

Allied Engineering
Structural Mechanical Electrical Plumbing
160 Veranda Street
Portland, Maine 04103
P: 207.221.2260
F: 207.221.2266
Web:www.allied-eng.com

Allied Project No: 12069 | Cad File:

AECOM
1 FEDERAL STREET, 8TH FLOOR
BOSTON, MA 02110
617.723.1700
www.aecom.com

STATE OF MAINE
DEPARTMENT OF TRANSPORTATION

DATE

FED PIN NO: NA

WIN NO: 017163.02 & 017163.03

STATE OF MAINE
CATHERINE A. FAUCHER
No. 7575
LICENSED
PROFESSIONAL ENGINEER

SIGNATURE

P.E. NUMBER 7575

DATE January 17, 2022

PROJECT INFORMATION

PROGRAM	-
PROJECT MANAGER	-
DESIGNER	AECOM
CONSULTANT	ALLIED ENGINEERING
PROJECT RESIDENT	-
CONTRACTOR	-
PROJECT COMPLETION DATE	-

MAINE DEPARTMENT OF TRANSPORTATION
ACADIA GATEWAY FACILITY
INTERMODAL AND WELCOME CENTER

Electrical Schedules

SHEET NUMBER
EP603

Username:
Division:
Date:
Filename:

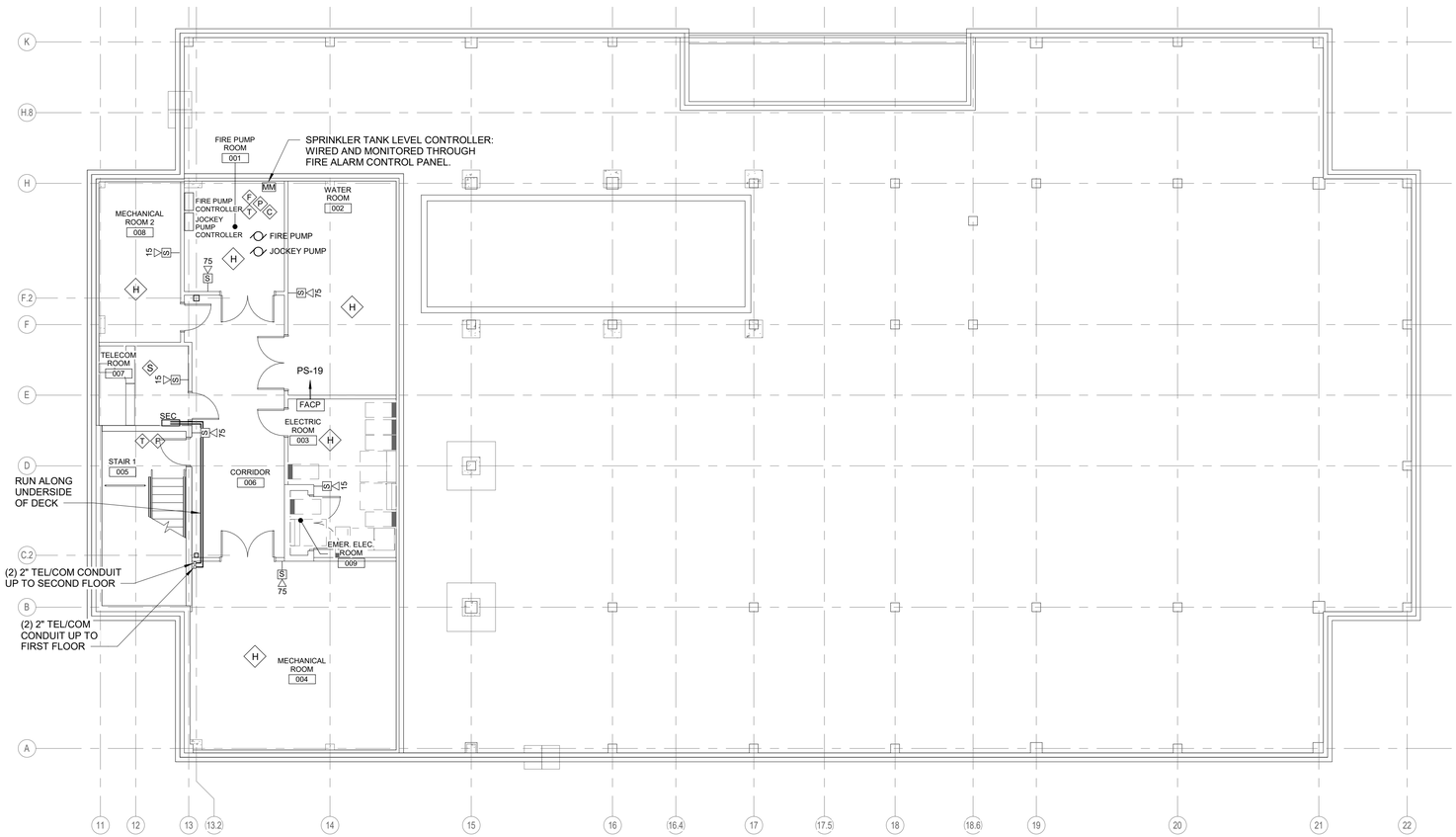

PROJECT KEY PLAN

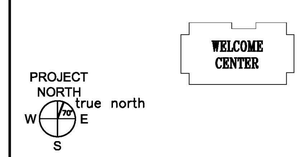

A1	SYSTEMS PLAN - BASEMENT - VISITOR CENTER
1/8" = 1'-0"	

Allied Engineering
Structural Mechanical Electrical Plumbing
160 Veranda Street
Portland, Maine 04103
P: 207.221.2260
F: 207.221.2266
Web: www.allied-eng.com

Allied Project No: 12069 | Cad File:

AECOM
1 FEDERAL STREET, 8TH FLOOR
BOSTON, MA 02110
617.723.1700
www.aecom.com

STATE OF MAINE
DEPARTMENT OF TRANSPORTATION

	DATE

FED PIN NO: NA

WIN NO: 017163.02 & 017163.03

STATE OF MAINE
CATHERINE A. FAUCHER
No. 7575
LICENSED
PROFESSIONAL ENGINEER

SIGNATURE

P.E. NUMBER 7575

DATE January 17, 2022

PROJECT INFORMATION

PROGRAM	-
PROJECT MANAGER	-
DESIGNER	AECOM
CONSULTANT	ALLIED ENGINEERING
PROJECT RESIDENT	-
CONTRACTOR	-
PROJECT COMPLETION DATE	-

MAINE DEPARTMENT OF TRANSPORTATION

ACADIA GATEWAY FACILITY

INTERMODAL AND WELCOME CENTER

Basement – Systems Plan

SHEET NUMBER

EY100

Filename: Division: Date: Username:

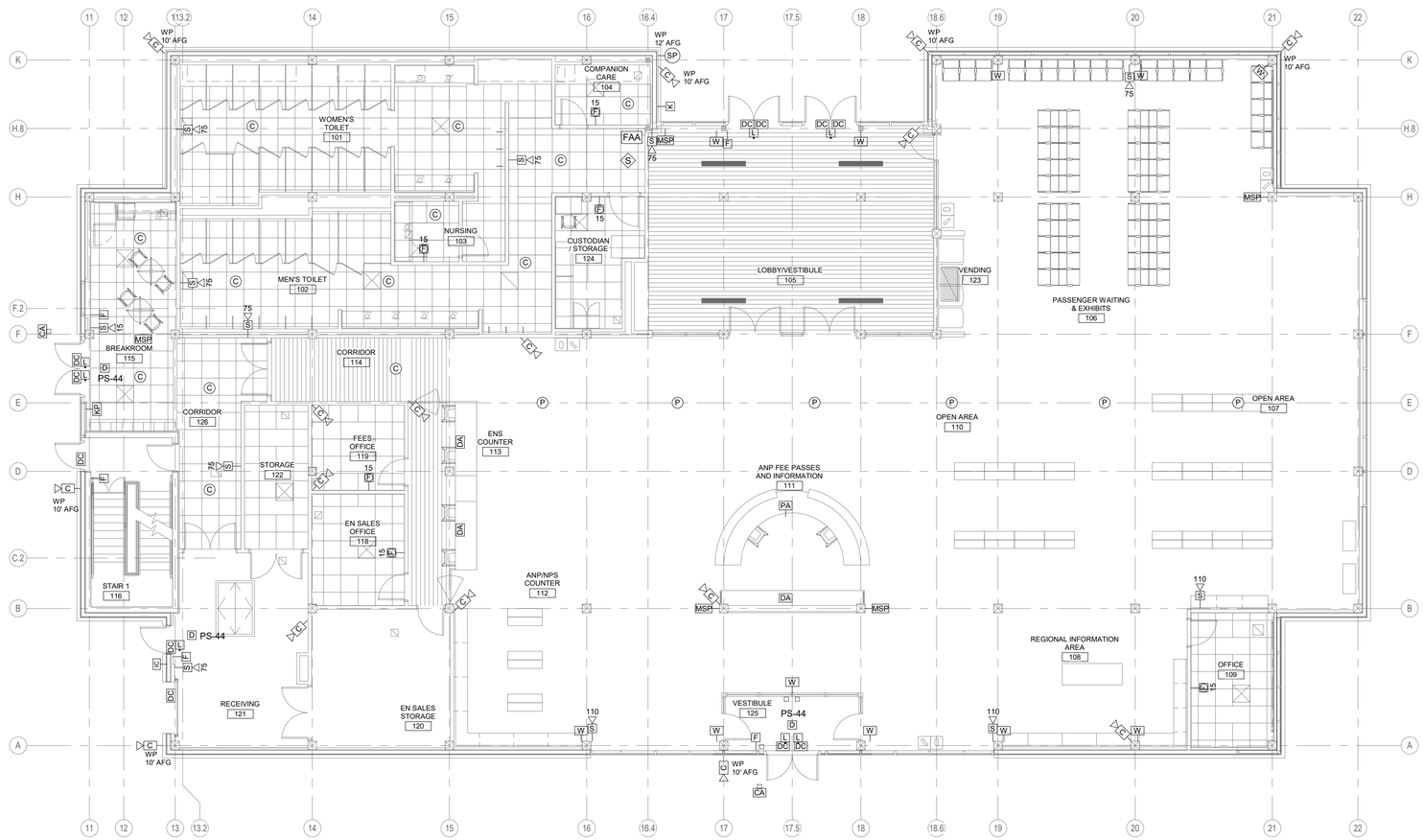

PROJECT KEY PLAN

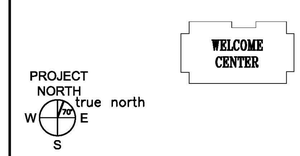

Allied Engineering
Structural Mechanical Electrical Plumbing
160 Veranda Street
Portland, Maine 04103
P: 207.221.2260
F: 207.221.2266
Web:www.allied-eng.com

AECOM
1 FEDERAL STREET, 8TH FLOOR
BOSTON, MA 02110
617.723.1700
www.aecom.com

Allied Project No: 12069 | Cad File:

A1 | SYSTEMS PLAN - FIRST FLOOR - VISITOR CENTER

1/8" = 1'-0"

STATE OF MAINE
DEPARTMENT OF TRANSPORTATION

DATE

FED PIN NO: NA

WIN NO: 017163.02 & 017163.03

STATE OF MAINE
CATHERINE A. FAUCHER
No. 7575
LICENSED PROFESSIONAL ENGINEER

SIGNATURE

P.E. NUMBER 7575

DATE January 17, 2022

PROJECT INFORMATION

PROGRAM	
PROJECT MANAGER	
DESIGNER	AECOM
CONSULTANT	ALLIED ENGINEERING
PROJECT RESIDENT	
CONTRACTOR	
PROJECT COMPLETION DATE	

MAINE DEPARTMENT OF TRANSPORTATION
ACADIA GATEWAY FACILITY
INTERMODAL AND WELCOME CENTER

First Floor Visitors Center – Systems Plan

SHEET NUMBER
EY101

Filename: Division: Date: Username:

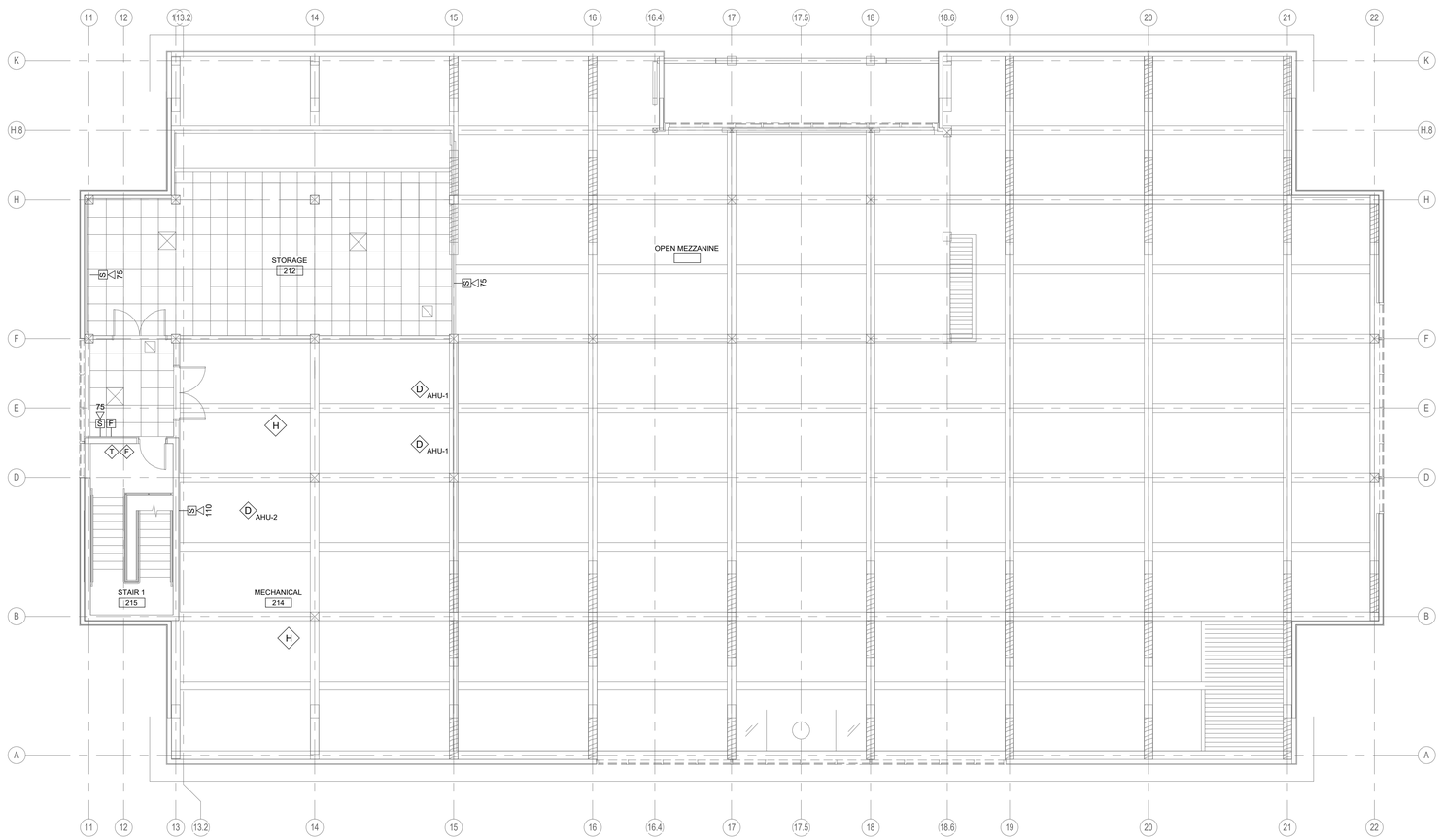

PROJECT KEY PLAN

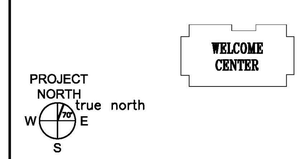

A1	SYSTEMS PLAN - SECOND FLOOR - VISITOR CENTER
1/8" = 1'-0"	

Allied Engineering
Structural Mechanical Electrical Plumbing
160 Veranda Street
Portland, Maine 04103
P: 207.221.2260
F: 207.221.2266
Web:www.allied-eng.com

Allied Project No: 12069 | Cad File:

AECOM
1 FEDERAL STREET, 8TH FLOOR
BOSTON, MA 02110
617.723.1700
www.aecom.com

STATE OF MAINE
DEPARTMENT OF TRANSPORTATION

	DATE

FED PIN NO: NA

WIN NO: 017163.02 & 017163.03

STATE OF MAINE
CATHERINE A. FAUCHER
No. 7575
LICENSED
PROFESSIONAL ENGINEER

SIGNATURE

P.E. NUMBER 7575

DATE January 17, 2022

PROJECT INFORMATION

PROGRAM	-
PROJECT MANAGER	AECOM
DESIGNER	ALLIED ENGINEERING
CONSULTANT	-
PROJECT RESIDENT	-
CONTRACTOR	-
PROJECT COMPLETION DATE	-

MAINE DEPARTMENT OF TRANSPORTATION

ACADIA GATEWAY FACILITY

INTERMODAL AND WELCOME CENTER

Second Floor Visitors Center – Systems Plan

SHEET NUMBER

EY102

Filename: Date: Division: Username:

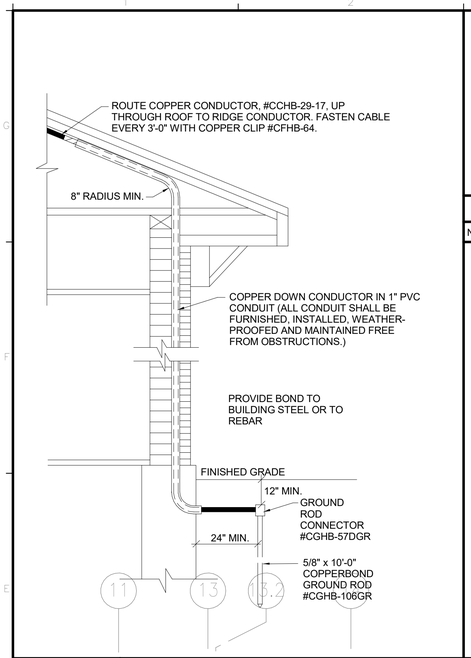

E1 LIGHTNING PROTECTION GROUNDING
NO SCALE

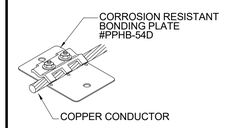

G3 BONDING PLATE
NO SCALE COPPER CONDUCTOR

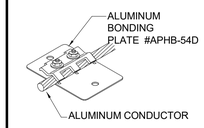

G4 BONDING PLATE
NO SCALE COPPER CONDUCTOR

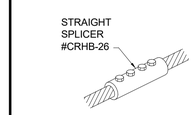

G5 STRAIGHT SPLICER
NO SCALE

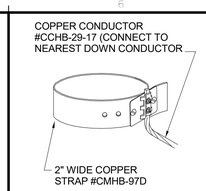

G6 WATERLINE BONDING
NO SCALE COPPER CONDUCTOR

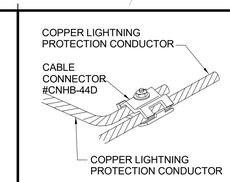

G7 CABLE CONNECTOR
NO SCALE

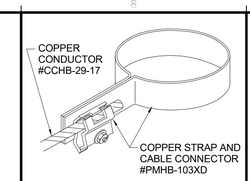

G8 PIPE CLAMP
NO SCALE ANTENNAS, ETC.

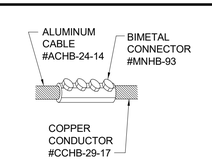

G9 BIMETAL CONNECTOR
NO SCALE

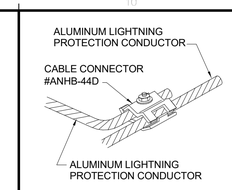

G10 CABLE CONNECTOR
NO SCALE

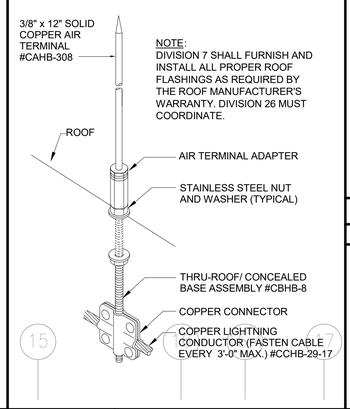

NOTE:
DIVISION 7 SHALL FURNISH AND INSTALL ALL PROPER ROOF FLASHINGS AS REQUIRED BY THE ROOF MANUFACTURER'S WARRANTY. DIVISION 26 MUST COORDINATE.

E3 CONCEALED AIR TERM BASE
NO SCALE

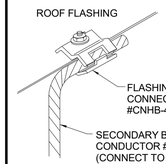

NOTE:
PROVIDE BONDING CONNECTION TO METAL FLASHING AT EACH DOWNLEAD LOCATION.

F4 FLASHING CONNECTOR

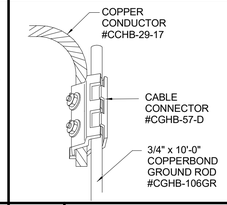

F6 GND ROD CONNECTR
NO SCALE

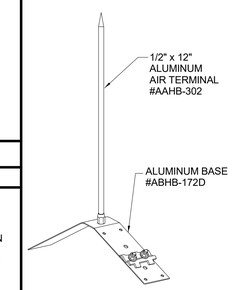

E8 RIDGE BASE AIR TERM
NO SCALE

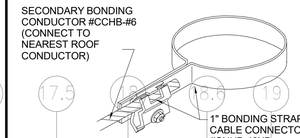

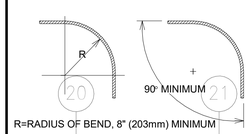

NOTE:
- LP CONDUCTOR SHALL REMAIN IN A HORIZONTAL OR DOWN- WARD PATH AVOIDING "U" & "V" POCKETS (DOWN & UP).
- NO BEND OF A CONDUCTOR SHALL FORM AN INCLUDED ANGLE OF LESS THAN 90° OR HAVE A RADIUS OF BEND LESS THAN 8".

E6 BEND RADIUS DETAIL
NO SCALE

SYMBOL	DESCRIPTION/NOTES
— — —	29 STRANDS OF 17 GAUGE COPPER CONDUCTOR (CONCEALED WITHIN BLDG. CONSTRUCTION) #CCHB-29-17
O A	3/8" x 12" SOLID COPPER AIR TERMINAL WITH PARAPET BASE #CAHB-308, 32D
O B	1/2" x 12" SOLID ALUMINUM AIR TERMINAL WITH RIDGE BASE #AAHB-3O2, 172D
	5/8"x10'-0" COPPERWELD GROUND ROD AND GROUND ROD CONNECTOR, #CGHB-106GR, #HB-57
	7 STRANDS 14 GAUGE COPPER CONDUCTOR (SECONDARY CABLE) #CCHB-6
	29 STRANDS OF 17 GAUGE COPPER CONDUCTOR (EXPOSED ON ROOF) #CCHB-29-17
	24 STRANDS OF 18 GAUGE ALUMINUM CONDUCTOR (AT SKYLIGHTS) #ACHB-24-14
	3/8" x 48" SOLID COPPER MID ROOF AIR TERMINAL WITH ADHESIVE BASE AND BRACE #CAHB-312, 23D, GSHB21AB-36
	3/8" x 12" SOLID COPPER AIR TERMINAL WITH CONCEALED BASE #CAHB-308, 8
	ALL ADHESIVE SHALL BE PROVIDED BY THE ROOFING CONTRACTOR.
	DOWN CONDUCTOR SHALL RUN IN 1" PVC CONDUIT WITHIN BUILDING CONSTRUCTION FROM ROOF TO GROUND ROD.
	ALL PVC CONDUIT AND CONDUIT SLEEVES FURNISHED, INSTALLED, WEATHERPROOFED AND MAINTAINED FREE FROM OBSTRUCTIONS BY DIVISION 26.
	ALL PVC CONDUIT AND SLEEVE INSTALLATION SHALL BE COORDINATED BETWEEN DIVISION 26 AND THE ROOFING CONTRACTOR.
	ALL PITCH PANS OR PROPER ROOF MEMBRANE FLASHING FURNISHED, INSTALLED AND WEATHERPROOFED BY THE ROOFING CONTRACTOR.
	*METAL FLASHING CONNECTION #CNHB-44D *METAL VENT PIPE CONNECTION #ANHB-42XD *METAL ROOF DRAIN CONNECTION #CNHB-160D
	SECONDARY BONDING IS REQUIRED WHEN METAL BODIES OF INDUCTANCE ARE LOCATED WITHIN 6FT. OF THE LIGHTNING PROTECTION SYSTEM OR OTHER GROUNDED BODIES.
	ALUMINUM CABLE CONNECTION #ANHB-44D
	COPPER CABLE CONNECTION #CNHB-44D
	HEAVY DUTY STRAIGHT SPLICER #CRHB-26
	CORROSION RESISTANT COPPER PERFECTION PIPE CLAMP (ANTENNAS, RAILINGS, ETC.) #PMHB-103XD
	CORROSION RESISTANT BONDING PLATE (AT DOWNLEAD LOCATIONS) #PPHB-54D
	ALUMINUM BONDING PLATE (AT SKYLIGHTS) #APHB-54D
	BIMETAL CONNECTION #MNHB-93
	FASTENERS (FASTEN CABLE EVERY 3'-0" (80mm) O.C. MAX.) #AFHB-72 , #AFHB-64A/80SS, #CFHB-64C/80SS, 72
	WATERLINE CONNECTION (FIRE AND DOMESTIC WATER) #CMHB-97D
	SURGE ARRESTORS AND SURGE SUPPRESSORS/TRANSIENT SUPPRESSORS SHALL BE PROVIDED BY DIVISION 26

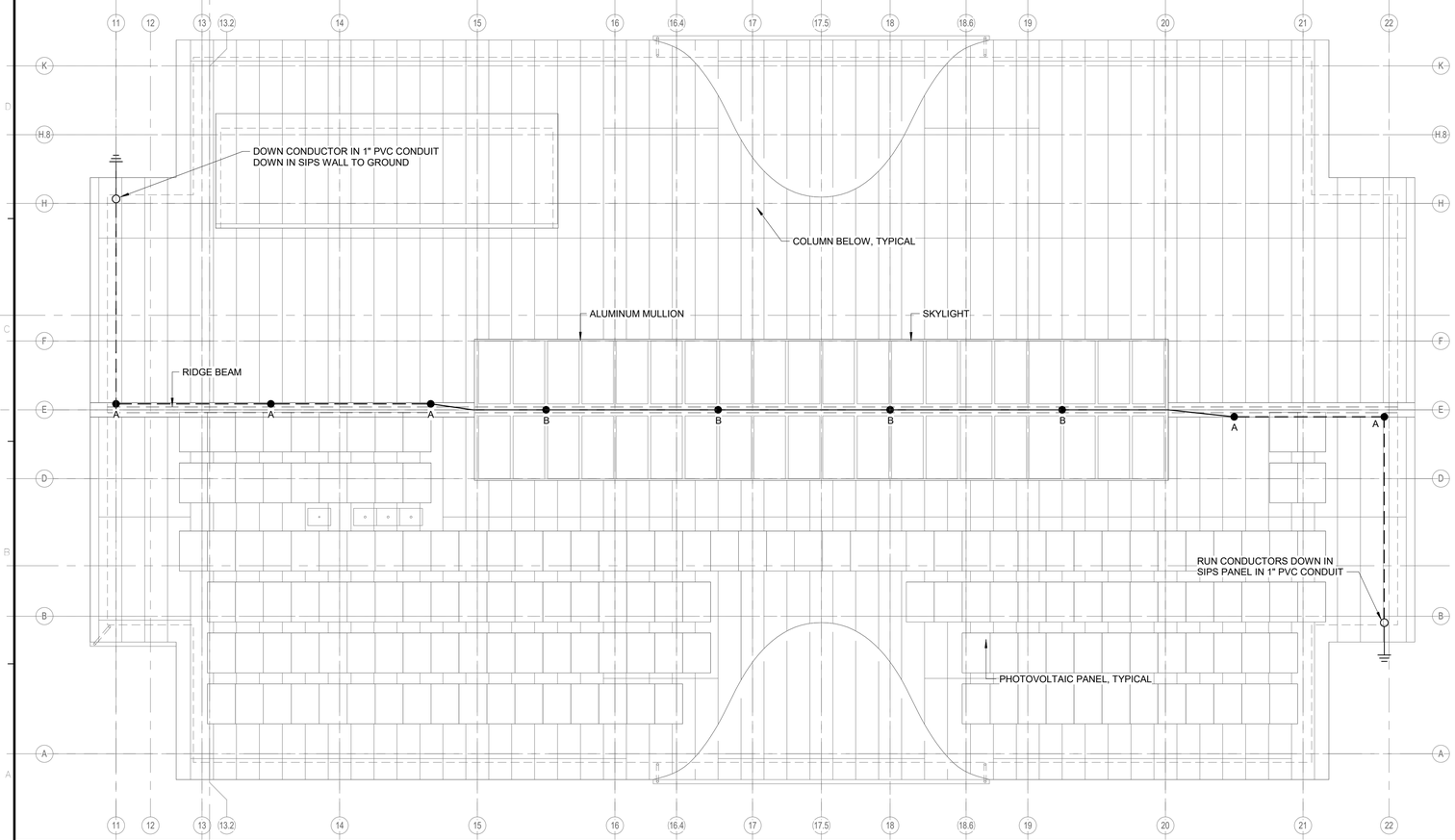

A1 LIGHTNING PROTECTION PLAN
1/8" = 1'-0"

GENERAL NOTES:

1. BASIS OF DESIGN MANUFACTURER IS HEARY BROS. LIGHTNING PROTECTION CO., INC

2. THE LIGHTNING PROTECTION SYSTEM AS SHOWN ON DRAWING HAS BEEN DESIGNED IN ACCORDANCE WITH UL-96 AND NFPA-780 LIGHTNING PROTECTION STANDARDS.

3. CONDUCTORS SHALL MAINTAIN A HORIZONTAL OR DOWNWARD COURSE, FREE FROM "U" OR "V" (DOWN AND UP) POCKETS

4. NO BEND OF A CONDUCTOR SHALL FORM A RADIUS OF LESS THAN 90 DEGREES NOR SHALL HAVE A RADUIS OF BEND OF LESS THAN 8"

5. AIR TERMINALS SHALL BE PLACED 20'-0" MAXIMUM SPACING AALONG ROOF RIDGES AND WITHIN 2'-0" OF OUTSIDE CORNERS

6. ACTUAL JOBSITE CONDITIONS MAY REQUIRE SLIGHT ALTERATIONS IN AIR TERMINAL, DOWN CONDUCTOR AND GROUND ROD LOCATIONS

7. BARE COPPER MATERIALS SHALL NOT BE INSTALLED ON ALUMINUM OR GALVALUM SURFACES AND ALUMINUM MATERIALS SHALL NOT BE INSTALLED ON COPPER SURFACES.

8. ALL LIGHTNING PROTECTION CONDUCTORS SHALL BE FASTENED HORIZONTALLY AND VERTICALLY NOT MORE THAN 3'-0" O.C. MAXIMUM SPACING.

9. ALL BOLTS ON BOLT PRESSURE CONNECTORS REQUIRE BEING TORQUED AT 150 POUND-INCHES (17N M).

10. ALL CONNECTIONS MUST BE USED WITH UL LISTED CLASS I CABLE OF THE SAME METAL TYPE.

11. METALLIC BODIES OF INDUCTANCE SITUATED WITHIN 6'-0" OF A LIGHTNING CONDUCTOR OR ANOTHER BONDED METAL BODY SHALL BE INTERCONNECTED TO THE LIGHTNING CONDUCTOR SYSTEM, UNLESS INHERENTLY GROUNDED.

12. BOND TO ALL BODIES OF CONDUCTANCE WITHIN 6'-0" OF THE MAIN LIGHTNING CONDUCTOR SUCH AS: EXHAUST FANS, ROOF VENTS, ANTENNAS, SKYLIGHTS AND METAL STACKS.

13. CONNECTIONS TO GROUND RODS SHALL BE MADE AT A POINT NOT LESS THAN 1'-0" BELOW FINISHED GRADE AND 2'-0" AWAY FROM FOUNDATION WALL.

14. BOND TO WATERLINES (DOMESTIC & FIRE).

15. A LIGHTNING ARRESTOR, PROTECTOR OR ANTENNA DISCHARGE UNIT SHALL BE INSTALLED ON EACH ELECTRIC AND TELEPHONE SERVICE AND RADIO AND TELEVISION ANTENNA LEAD-IN BY DIVISION 26, PER NFPA-70.

Allied Engineering
Structural Mechanical Electrical Plumbing
160 Veranda Street
Portland, Maine 04103
P: 207.221.2260
F: 207.221.2266
Web:www.allied-eng.com
Allied Project No: 12069 | Cad File:

AECOM
1 FEDERAL STREET, 8TH FLOOR
BOSTON, MA 02110
617.723.1700
www.aecom.com

STATE OF MAINE
DEPARTMENT OF TRANSPORTATION

DATE

FED PIN NO: NA
WIN NO: 017163.02 & 017163.03

STATE OF MAINE
CATHERINE A. FAUCHER
No. 7575
LICENSED PROFESSIONAL ENGINEER

SIGNATURE
P.E. NUMBER 7575
DATE January 17, 2022

PROJECT INFORMATION
PROGRAM -
PROJECT MANAGER AECOM
DESIGNER ALLIED ENGINEERING
CONSULTANT -
PROJECT RESIDENT -
CONTRACTOR -
PROJECT COMPLETION DATE -

MAINE DEPARTMENT OF TRANSPORTATION
ACADIA GATEWAY FACILITY
INTERMODAL AND WELCOME CENTER
Lightning Protection Plan and Details

SHEET NUMBER
LP100

Username:
Division:
Date:
Filename:

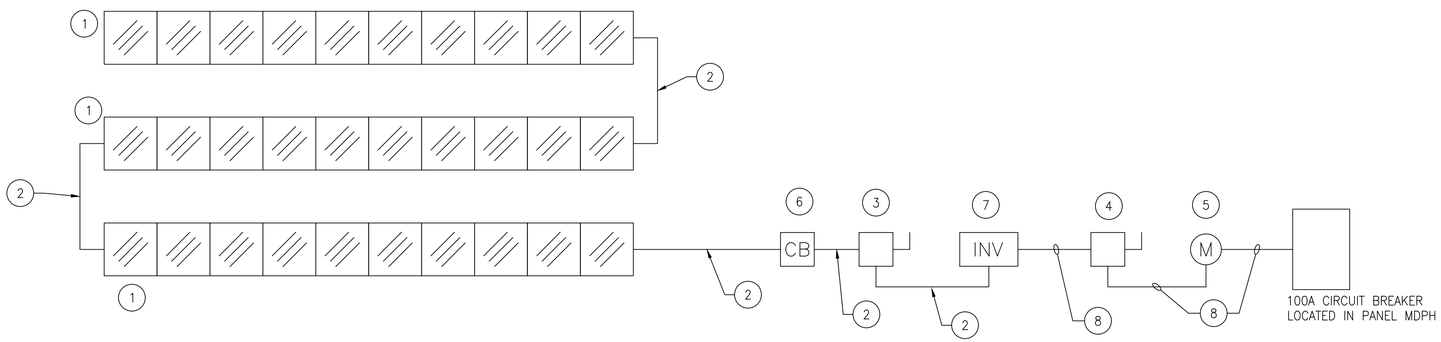

1 PHOTOVOLTAICS SYSTEM DIAGRAM (57KW)
NONE

KEY NOTES

1. PHOTOVOLTAIC MODULES LOCATED ON ROOF. QUANTITY AND LAYOUT SHOWN IS DIAGRAMMATIC ONLY. SEE SHEET A205 FOR ACTUAL LOCATIONS, QUANTITY, AND ADDITIONAL INFORMATION.
2. PHOTOVOLTAIC MODULES INTERCONNECTIONS SHALL BE BY PV INSTALLER.
3. DC DISCONNECT. 200A, 2–POLE, NF, NEMA–3R LOCKING DISCONNECT SWITCH. LOCATE ON BUILDING EXTERIOR.
4. AC DISCONNECT. 200A, 3–POLE, NF, NEMA–3R LOCKING DISCONNECT SWITCH. LOCATE ON BUILDING EXTERIOR.
5. PV METER
6. COMBINER BOX BY PV SUPPLIER
7. INTERACTIVE INVERTER BY PV SUPPLIER
8. (3) #1AWG, (1) #8, 1–1/2" RGS CONDUIT. ELECTRICAL CONTRACTOR SHALL BE RESPONSIBLE FOR ALL CONNECTIONS BETWEEN INTERACTIVE INVERTER AND BUILDING AC PANEL. SEE DRAWING EP500 FOR ADDITIONAL INFORMATION.

GENERAL NOTES

1. REFER TO SHEET E000 FOR ADDITIONAL ELECTRICAL GENERAL NOTES, SYMBOLS LEGENDS, AND ABBREVIATIONS.
2. REFER TO SHEET EP500 FOR BUILDING ONE–LINE DIAGRAM.
3. REFER TO EP600 SHEET SERIES FOR PANEL SCHEDULES.
4. BASIS OF DESIGN IS BY HANNAH SOLAR.
5. PHOTOVOLTAIC SYSTEM (PVS) DRAWINGS ARE PERFORMANCE–BASED AND DIAGRAMMATIC. THE PVS SUPPLIER SHALL SUBMIT SIGNED AND SEALED CONSTRUCTION DRAWINGS TO THE ENGINEER OF RECORD FOR THEIR REVIEW AND APPROVAL.

NOT FOR CONSTRUCTION

PROJECT KEY PLAN

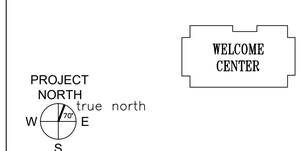

AECOM
1 FEDERAL STREET, 8TH FLOOR
BOSTON, MA 02110
617.723.1700
www.aecom.com

STATE OF MAINE
DEPARTMENT OF TRANSPORTATION

DATE

FED PIN NO: NA

PIN NO: 017163.02

STATE OF MAINE
DONNA J. MILLER
841305
LICENSED
PROFESSIONAL ENGINEER
1/07/2022

SIGNATURE

ARCH. LIN. NUMBER –

DATE JANUARY 7, 2022

PROJECT INFORMATION

PROGRAM	–
PROJECT MANAGER	–
DESIGNER	AECOM
CONSULTANT	–
PROJECT RESIDENT	–
CONTRACTOR	–
PROJECT COMPLETION DATE	–

MAINE DEPARTMENT OF TRANSPORTATION
ACADIA GATEWAY FACILITY
INTERMODAL AND WELCOME CENTER

PHOTOVOLTAICS SYSTEM
DIAGRAM (57KW)

SHEET NUMBER
PV100

C:\Users\leonking\OneDrive - AECOM Directory\Documents\Leon Stuff\AECOM\Misc Projects\Acadia\2021 1123_PV100.dwg Jan 06, 2022 - 9:16pm

NPS symbols / icons / arrows

NPS Arrowhead Black and White
NPS Arrowhead 4 Color
Men
Women
Restrooms
Wheelchair Accessible
Wheelchair Accessible
Parking
Parking
Hiking Trail

No Food or Drinks
No Pets
No Firearms
Island Explorer

Arrow Type B Road Guides SG Sign Types
Arrow Variants
Arrow Variants
Arrow Variants
Arrow Variants

alignment
Park

project typography

ABCDEFGHIJKLMNOPQURSTVWXYZ
abcdefghijklmnopqurstvwxyz1234567890!$%?:;

t.1
NPS Rawlinson OT - Bold
Terminal Design

ABCDEFGHIJKLMNOPQURSTVWXYZ
abcdefghijklmnopqurstvwxyz1234567890!$%?:;

t.2
NPS Rawlinson OT - Heavy
Terminal Design

ABCDEFGHIJKLMNOPQURSTVWXYZ
abcdefghijklmnopqurstvwxyz1234567890!$%?:;

t.3
ClearviewHWY 4B
Terminal Design

ABCDEFGHIJKLMNOPQURSTVWXYZ
abcdefghijklmnopqurstvwxyz1234567890!$%?:;

t.4
Frutiger 65 Bold
Adobe Systems

ABCDEFGHIJKLMNOPQURSTVWXYZ
abcdefghijklmnopqurstvwxyz1234567890!$%?:;

t.5
Frutiger 55 Roman
Adobe Systems

paint finishes per UNIguide Standards

pt.1
matthews paints
MP048306
"Obsidian"

pt.2
benjamin moore
Classics1000

pt.3
benjamin moore
Color Preview
2143-50
"Old Prarie"

pt.4
matthews paints
Color Preview
2139-10
"River Rock"

pt.5
matthews paints
Color Preview
2130-10
"Black Bean Soup"

pt.6
matthews paints
PMS 1615

pt.7
matthews paints
MP31645
"Designer White"

pressure sensative films

v.1
3m 7725-47
"Intense Blue"

v.2
3m 7725-10
"White"

v.3
3m 7725-53
"Cardinal Red"

v.4
3m 7725-56
"Dark Green"

v.5
3m 3290
"Reflective White"

v.6
3m 7725-12
"Black"

v.7
3m 7725-186
"Bright Green"

v.8
3m 7725-57
"Olympic Blue"

v.9
3m 7725SE -314
"Dusted Crystal"

metal finshes

m.1
weathered steel
Corten or equal

PROJECT KEY PLAN

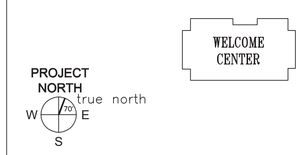

AECOM
1 FEDERAL STREET, 8TH FLOOR
BOSTON, MA 02110
617.723.1700
www.aecom.com

STATE OF MAINE
DEPARTMENT OF TRANSPORTATION

DATE

FED PIN NO: NA
WIN NO: 017163.02 & 017163.03

SIGNATURE
–
ARCH. LIN. NUMBER
–
DATE JANUARY 17, 2022

PROJECT INFORMATION

PROGRAM	–
PROJECT MANAGER	–
DESIGNER	AECOM
CONSULTANT	–
PROJECT RESIDENT	–
CONTRACTOR	–
PROJECT COMPLIETION DATE	–

MAINE DEPARTMENT OF TRANSPORTATION
ACADIA GATEWAY FACILITY
INTERMODAL AND WELCOME CENTER

SYMBOLS, TYPOGRAPHY, AND PAINT FINISHES

SHEET NUMBER
SG101

C:\Users\stacy.zung\OneDrive - AECOM Directory\Acadia\06 Construction Docs_Titleblock\Titleblock 24X36.dwg Jan 13, 2022 - 9:05am

Sign Type	Sign Location	Sign Description	Message A	Message B	Message C	Message D	Comments
SITE / EXTERIOR							
A1	001	Primary Site Identity	NPS Arrow	Acadia Gateway Center	[island explorer logo]	[downeast logo]	
A2	001	Secondary Site Identity	NPS Arrow	Acadia Gateway Center	Maine Information Center	Island Explorer Shuttles	
A3	001	Building Identity	Acadia Gateway Center				
A5	001	Bus Stop Identity	Acadia Gateway Center				
A6	001	Service Entrance Identity	Receiving				
A6.1	001	Restricted Access Regulation	No Vehicles Beyond this Point				
C1.1A	001	Information Kiosk - Side 1, Panel A					Artwork by others. ANP to provide digital files to contractor
C1.1B	001	Information Kiosk - Side 1, Panel B					Artwork by others. ANP to provide digital files to contractor
C1.2A	001	Information Kiosk - Side 2, Panel A					Artwork by others. ANP to provide digital files to contractor
C1.2B	001	Information Kiosk - Side 2, Panel B					Artwork by others. ANP to provide digital files to contractor
C2	001	Bus Schedule	Variable Message Display	Island Explorer Logo			
C2	002	Bus Schedule	Variable Message Display	Downeast Logo			
C3	001	Orientation Exhibit	MOT Info Kiosk				MOT to provide digital files
C3	002	Orientation Exhibit	MDI Info Kiosk				MDI to provide digital files
C3	003	Orientation Exhibit	Island Explorer Kiosk				DTI to provide digital files
C4	001	DTI Table / Map Holder					Content to be provided by DTI
C4	002	DTI Table / Map Holder					Content to be provided by DTI
PARKING AREA / HIGHWAY							
B1.1	004	Vehicle Direction - Medium	(Arrow up) Exit	Visitor Parking (Arrow right)			
B1.1	006	Vehicle Direction - Medium	(Arrow up) [hiking symbol] Hiking Trails	DTI Office (Arrow right)			
B1.1	007	Vehicle Direction - Medium	(Arrow up) Rideshare/Taxi School Bus Drop-Off Receiving				
B1.1	008	Vehicle Direction - Medium	(Arrow left) Rideshare/Taxi School Bus Drop-Off Receiving				
B1.1	009	Vehicle Direction - Medium	(Arrow angled up-left) Exit	School Bus Drop-Off (Arrow angled up-right)			
B1.1	010	Vehicle Direction - Medium	(Arrow up) Bus & RV Parking Park & Ride DTI Office				
B1.2	001	Vehicle Direction - Large	(Arrow up) All Other Vehicles School Bus Drop-Off	(Arrow left) Authorized Buses Only			
B1.2	002	Vehicle Direction - Large	(Arrow left) Visitor Parking Rideshare/Taxi School Bus Drop-Off Receiving				
B1.2	003	Vehicle Direction - Large	(Arrow up) Bus & RV Parking Park & Ride DTI Office	(Arrow left) Visitor Parking			
B1.2	005	Vehicle Direction - Large	(Arrow up) Park & Ride DTI Office [hiking symbol] Hiking Trails	(Arrow left) Bus & RV Parking			
B2	001	Vehicle Direction - Small	(Arrow left) Receiving				
B2	002	Vehicle Direction - Small	[Rt 3 symbol] Exit (Arrow right)				
B2	003	Vehicle Direction - Small	[Rt 3 symbol] Exit (Arrow right)				
B3	001	Highway Guide Vehicle Direction	[NPS Symbol]	Acadia Gateway Center	Maine Visitor Information Island Explorer Shuttles	1000 feet ahead	
B3	002	Highway Guide Vehicle Direction	[NPS Symbol]	Acadia Gateway Center	Maine Visitor Information Island Explorer Shuttles	1/2 mile ahead	
B3	003	Highway Guide Vehicle Direction	[NPS Symbol]	Acadia Gateway Center	Symbols: [Restrooms] [Bus] [Parking] [Info]	3-1/2 miles ahead	

PROJECT KEY PLAN

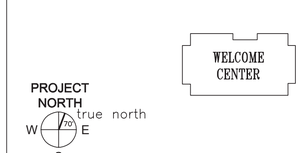

AECOM
1 FEDERAL STREET, 8TH FLOOR
BOSTON, MA 02110
617.723.1700
www.aecom.com

STATE OF MAINE
DEPARTMENT OF TRANSPORTATION

DATE

FED PIN NO: NA

WIN NO: 017163.02 & 017163.03

SIGNATURE

ARCH. LIN. NUMBER

DATE JANUARY 17, 2022

PROJECT INFORMATION

PROGRAM	–
PROJECT MANAGER	–
DESIGNER	AECOM
CONSULTANT	–
PROJECT RESIDENT	–
CONTRACTOR	–
PROJECT COMPLETION DATE	–

MAINE DEPARTMENT OF TRANSPORTATION
ACADIA GATEWAY FACILITY
INTERMODAL AND WELCOME CENTER

SIGNAGE MESSAGE SCHEDULE - PART 1

SHEET NUMBER

SG102

C:\Users\stacy.zung\OneDrive - AECOM Directory\Acadia\06 Construction Docs_Titleblock\Titleblock 24X36.dwg Jan 13, 2022 - 9:05am

Sign Type	Sign Location	Sign Description	Message A	Message B	Message C	Message D	Comments
PARKING AREA / HIGHWAY (CONTINUED)							
D1	001	Enhanced Stop Regulation	MUTCD STANDARD				DOUBLE SIDED APPLICATION
D1	002	Enhanced Stop Regulation	MUTCD STANDARD				
D1	003	Enhanced Stop Regulation	MUTCD STANDARD				
D1	004	Enhanced Stop Regulation	MUTCD STANDARD				
D1	005	Enhanced Stop Regulation	MUTCD STANDARD				
D1	006	Enhanced Stop Regulation	MUTCD STANDARD				
D1	007	Enhanced Stop Regulation	MUTCD STANDARD				
D1	008	Enhanced Stop Regulation	MUTCD STANDARD				
D1	009	Enhanced Stop Regulation	MUTCD STANDARD				
D1	010	Enhanced Stop Regulation	MUTCD STANDARD				
D1	011	Enhanced Stop Regulation	MUTCD STANDARD				
D1	012	Enhanced Stop Regulation	MUTCD STANDARD				
D1	013	Enhanced Stop Regulation	MUTCD STANDARD				DOUBLE SIDED APPLICATION
D2	001	Enhanced Do Not Enter Regulation	MUTCD STANDARD				DOUBLE SIDED APPLICATION
D2	002	Enhanced Do Not Enter Regulation	MUTCD STANDARD				DOUBLE SIDED APPLICATION
D3	001	Enhanced Crosswalk Regulation	MUTCD STANDARD				
D3	004	Enhanced Crosswalk Regulation	MUTCD STANDARD				
D3	005	Enhanced Crosswalk Regulation	MUTCD STANDARD				
D3	006	Enhanced Crosswalk Regulation	MUTCD STANDARD				
D3	007	Enhanced Crosswalk Regulation	MUTCD STANDARD				
D3	008	Enhanced Crosswalk Regulation	MUTCD STANDARD				
D3	009	Enhanced Crosswalk Regulation	MUTCD STANDARD				
D3	010	Enhanced Crosswalk Regulation	MUTCD STANDARD				
D3	011	Enhanced Crosswalk Regulation	MUTCD STANDARD				
D3	012	Enhanced Crosswalk Regulation	MUTCD STANDARD				
D4	001	Restricted Access Regulation	(DO NOT ENTER) Island Express & Charter Buses Only				
D4	002	Restricted Access Regulation	(DO NOT ENTER) Island Express & Charter Buses Only				
D4	003	Restricted Access Regulation	(DO NOT ENTER) Service Vehicles / Receiving Only				
D5	001	Accessible Parking Regulation	Reserved Parking	Disabled Permit Holders Only	(HC)		
D5	002	Accessible Parking Regulation	Reserved Parking	Disabled Permit Holders Only	(HC)		
D5	003	Accessible Parking Regulation	Reserved Parking	Van Accessible	(HC)		
D5	004	Accessible Parking Regulation	Reserved Parking	Van Accessible	(HC)		
D5	005	Accessible Parking Regulation	Reserved Parking	Van Accessible	(HC)		
D5	006	Accessible Parking Regulation	Reserved Parking	Van Accessible	(HC)		
D5	007	Accessible Parking Regulation	Reserved Parking	Van Accessible	(HC)		

PROJECT KEY PLAN

AECOM
1 FEDERAL STREET, 8TH FLOOR
BOSTON, MA 02110
617.723.1700
www.aecom.com

STATE OF MAINE
DEPARTMENT OF TRANSPORTATION

DATE

FED PIN NO: NA
WIN NO: 017163.02 & 017163.03

PROJECT INFORMATION

PROGRAM	–
PROJECT MANAGER	–
DESIGNER	AECOM
CONSULTANT	–
PROJECT RESIDENT	–
CONTRACTOR	–
PROJECT COMPLETION DATE	–

SIGNATURE
–
ARCH. LIN. NUMBER
–
DATE JANUARY 17, 2022

MAINE DEPARTMENT OF TRANSPORTATION
ACADIA GATEWAY FACILITY
INTERMODAL AND WELCOME CENTER

SIGNAGE MESSAGE SCHEDULE - PART 2

SHEET NUMBER
SG103

C:\Users\stacy.zung\OneDrive - AECOM Directory\Acadia\06 Construction Docs_Titleblock\Titleblock 24X36.dwg Jan 13, 2022 - 9:05am

Sign Type	Sign Location	Sign Description	Message A	Message B	Message C	Message D	Comments
PARKING AREA / HIGHWAY (CONTINUED)							
D6.1	001	Island Explorer Bus Parking Regulation	Reserved Parking	(Island Explorer logo)	BUS STOP		
D6.1	002	Island Explorer Bus Parking Regulation	Reserved Parking	Island Explorer Parking Only	(P)		
D6.1	003	Island Explorer Bus Parking Regulation	Reserved Parking	Island Explorer Parking Only	(P)		
D6.1	004	Island Explorer Bus Parking Regulation	Reserved Parking	Island Explorer Parking Only	(P)		
D6.2	001	Charter Bus Parking Regulation	Reserved Parking	Short Term Charter Bus Parking Only	(P)		
D6.2	002	Charter Bus Parking Regulation	Reserved Parking	Short Term Charter Bus Parking Only	(P)		
D6.3	001	Bus Parking Regulation		No Parking Beyond this Point			
D9.1	001	Electric Vehicle Regulation	Reserved	Level 3 Charger	(electric vehicle symbol)	(arrow right)	
D9.1	002	Electric Vehicle Regulation	Reserved	Level 2 Charger	(electric vehicle symbol)	(arrow right)	
D9.2	001	Electric Vehicle Regulation	Level 3 Charger	(electric vehicle symbol)	(arrow left)		
D9.2	002	Electric Vehicle Regulation	Level 2 Charger	(electric vehicle symbol)	(arrow left)		
D9.3	001	Electric Vehicle Regulation	Reserved Parking	Level 2 Charger	Electric Vehicle Charging for Disabled Permit Holders Only	(electric vehicle symbol + HC)	
D9.3	002	Electric Vehicle Regulation	Reserved Parking	Level 3 Charger	Electric Vehicle Charging for Disabled Permit Holders Only	(electric vehicle symbol + HC)	
D9.4	001	Electric Vehicle Regulation	Level 3 Charger	(electric vehicle symbol)	(double-sided arrow)		
D9.4	002	Electric Vehicle Regulation	Level 2 Charger	(electric vehicle symbol)	(double-sided arrow)		

PROJECT KEY PLAN

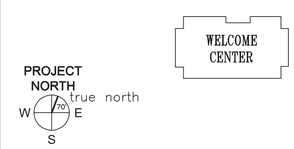

AECOM
1 FEDERAL STREET, 8TH FLOOR
BOSTON, MA 02110
617.723.1700
www.aecom.com

STATE OF MAINE
DEPARTMENT OF TRANSPORTATION

DATE

FED PIN NO: NA

WIN NO: 017163.02 & 017163.03

SIGNATURE
–

ARCH. LIN. NUMBER
–

DATE JANUARY 17, 2022

PROJECT INFORMATION

PROGRAM	–
PROJECT MANAGER	–
DESIGNER	AECOM
CONSULTANT	–
PROJECT RESIDENT	–
CONTRACTOR	–
PROJECT COMPLETION DATE	–

MAINE DEPARTMENT OF TRANSPORTATION
ACADIA GATEWAY FACILITY
INTERMODAL AND WELCOME CENTER

NAME OF SHEET
NAME OF SHEET

SHEET NUMBER
SG104

C:\Users\stacy.zung\OneDrive - AECOM Directory\Acadia\06 Construction Docs_Titleblock\Titleblock 24X36.dwg Jan 13, 2022 - 9:05am

Sign Type	Sign Location	Sign Description	Message A	Message B	Message C	Message D	Comments
BASEMENT LEVEL							
A17	B01	Room Identity	Mechanical Room #2	B02	(braille)		
A17	B02	Room Identity	Telecom Room	B01	(braille)		
A17	B03	Room Identity	Fire Pump Room	B03	(braille)		
A17	B04	Room Identity	Water Room	B04	(braille)		
A17	B05	Room Identity	Electrical Room	B05	(braille)		
A17	B06	Room Identity	Mechanical Room #1	B06	(braille)		
A17	B09	Room Identity	Emergency Electrical Closet	B05.1	(braille)		
A20	B07	Stair Identity	(Stair Symbol)	STAIRS	(braille)		
A21	B08	Level Identity	STAIRS FLOOR B (up arrow)	LEVELS B THRU 2 EXIT ON LEVEL 1	NO ROOF ACCESS	(braille line 1) (braille line 2)	
FIRST LEVEL							
A12	126	Primary Desk Identity	(Information Icon)	< Maine Tourism	Acadia National Park >		
A13	117	Secondary Desk Identity	Visitor Fees & Passes				
A17	101	Room Identity	Companion Care	102	(braille)		
A17	104	Room Identity	Janitor Closet and Storage	101	(braille)		
A17	105	Room Identity	Breakroom and Lockers	(-)	(braille)		
A17	109	Room Identity	Nursing Room	103	(braille)		
A17	115	Room Identity	Storage Room #1	105	(braille)		
A17	116	Room Identity	Receiving	104	(braille)		
A17	119	Room Identity	Storage Room #2	106	(braille)		
A17	120	Room Identity	Storage Room #2	106	(braille)		
A17	121	Room Identity	Receiving	104	(braille)		
A18	114	Room Identity with Insert	108	(braille)	Insert		
A18	118	Room Identity with Insert	107	(braille)	Insert		
A18	132	Room Identity with Insert	109	(braille)	Insert		
A19	107	Restroom Identity	(women/hc symbol)	WOMEN	(braille)		
A19	108	Restroom Identity	(men/hc symbol)	MEN	(braille)		
A20	113	Stair Identity	(Stair Symbol)	STAIRS	(braille)		
A21	112	Level Identity	STAIRS FLOOR 1	LEVELS B THRU 2 EXIT THIS LEVEL	NO ROOF ACCESS	(braille line 1) (braille line 2)	
E1	123	Ceiling Banners	Image FPO				Image to be supplied by NPS
E1	124	Ceiling Banners	Image FPO				Image to be supplied by NPS
E1	129	Ceiling Banners	Image FPO				Image to be supplied by NPS
E1	130	Ceiling Banners	Image FPO				Image to be supplied by NPS
E1	131	Ceiling Banners	Image FPO				Image to be supplied by NPS
SECOND LEVEL							
A17	202	Room Identity	Storage Room #3	201	(braille)		
A17	207	Room Identity	Storage Room #3	201	(braille)		
A17	211	Room Identity	Mechanical Room #3	202	(braille)		
A20	209	Stair Identity	(Stair Symbol)	STAIRS	(braille)		
A21	210	Level Identity	STAIRS FLOOR 2 (down arrow)	LEVELS B THRU 2 EXIT ON LEVEL 1	NO ROOF ACCESS	(braille line 1) (braille line 2)	

PROJECT KEY PLAN

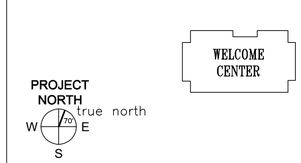

AECOM
1 FEDERAL STREET, 8TH FLOOR
BOSTON, MA 02110
617.723.1700
www.aecom.com

STATE OF MAINE
DEPARTMENT OF TRANSPORTATION

DATE

FED PIN NO: NA

WIN NO: 017163.02 & 017163.03

PROJECT INFORMATION

PROGRAM	-	SIGNATURE
PROJECT MANAGER	-	-
DESIGNER	AECOM	ARCH. LIN. NUMBER
CONSULTANT	-	-
PROJECT RESIDENT	-	DATE
CONTRACTOR	-	-
PROJECT COMPLETION DATE	-	JANUARY 17, 2022

MAINE DEPARTMENT OF TRANSPORTATION
ACADIA GATEWAY FACILITY
INTERMODAL AND WELCOME CENTER

SIGNAGE MESSAGE SCHEDULE - PART 3

SHEET NUMBER
SG105

C:\Users\stacy.zung\OneDrive - AECOM Directory\Acadia\06 Construction Docs_Titleblock\Titleblock 24X36.dwg Jan 13, 2022 - 9:05am

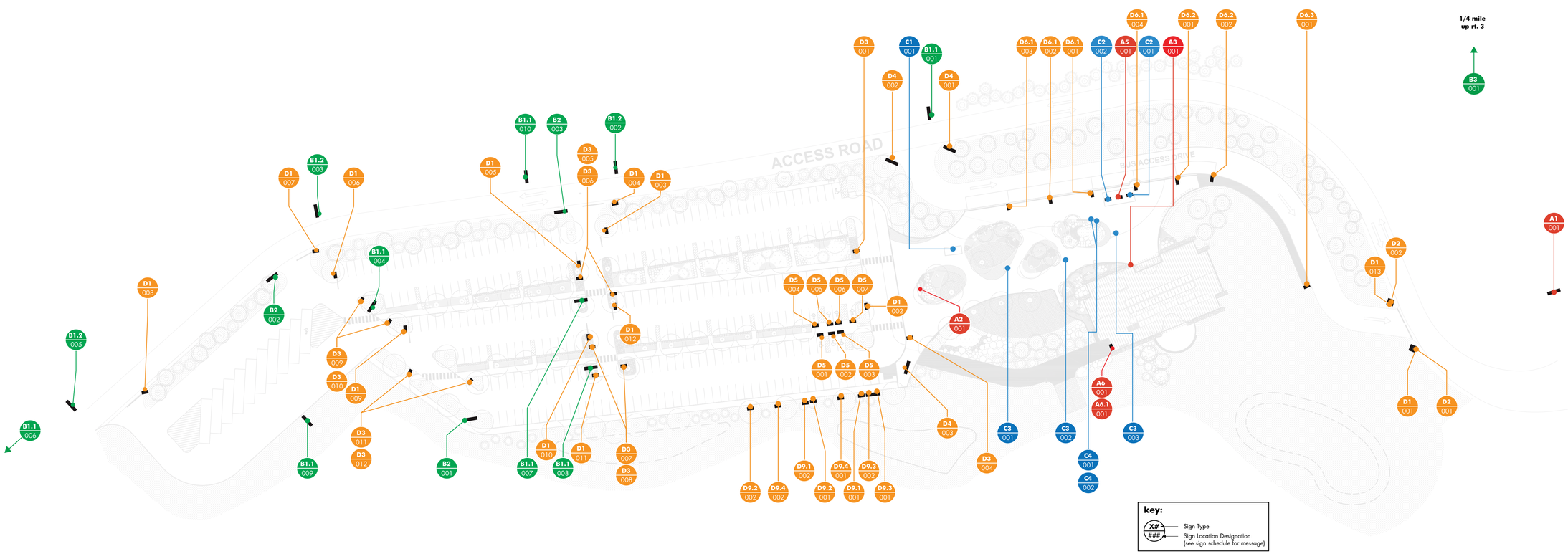

ACADIA GATEWAY CENTER SIGNS-ELLSWORTH

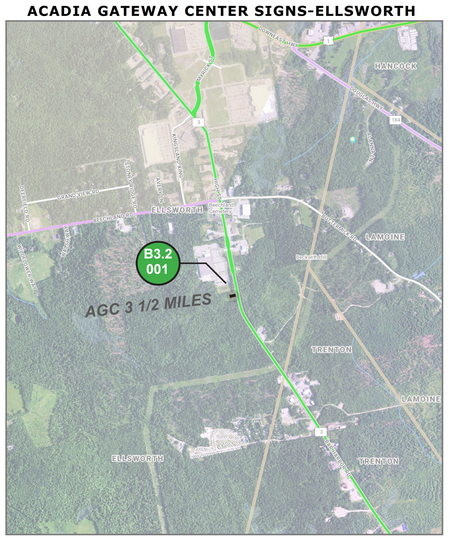

ACADIA GATEWAY CENTER SIGNS-TRENTON

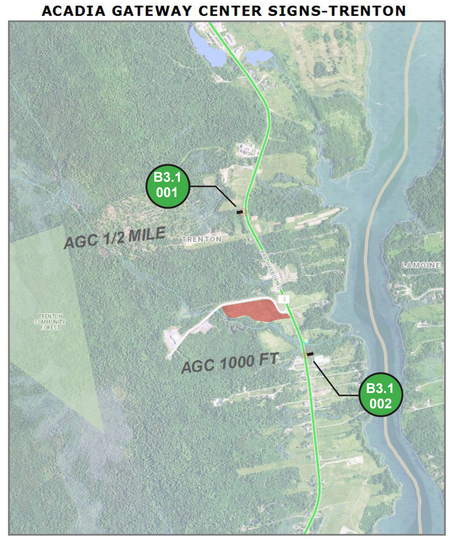

NOTE

Final locations for all three approach signs on Route 3 need to be coordinated with the MaineDOT Region 4 Traffic Engineer. They can be reached at (207) 941-4500

PROJECT KEY PLAN

AECOM
1 FEDERAL STREET, 8TH FLOOR
BOSTON, MA 02110
617.723.1700
www.aecom.com

STATE OF MAINE
DEPARTMENT OF TRANSPORTATION

DATE

FED PIN NO: NA

WIN NO: 017163.02 & 017163.03

SIGNATURE –

ARCH. LIN. NUMBER –

DATE JANUARY 17, 2022

PROJECT INFORMATION		
PROGRAM	–	
PROJECT MANAGER	–	
DESIGNER	AECOM	
CONSULTANT	–	
PROJECT RESIDENT	–	
CONTRACTOR	–	
PROJECT COMPLETION DATE	–	DATE

MAINE DEPARTMENT OF TRANSPORTATION
ACADIA GATEWAY FACILITY
INTERMODAL AND WELCOME CENTER

EXTERIOR SIGNAGE
LOCATION PLAN

SHEET NUMBER
SG106

C:\Users\stacy.zung\OneDrive - AECOM Directory\Acadia\06 Construction Docs_Titleblock\Titleblock 24X36.dwg Jan 13, 2022 - 9:05am

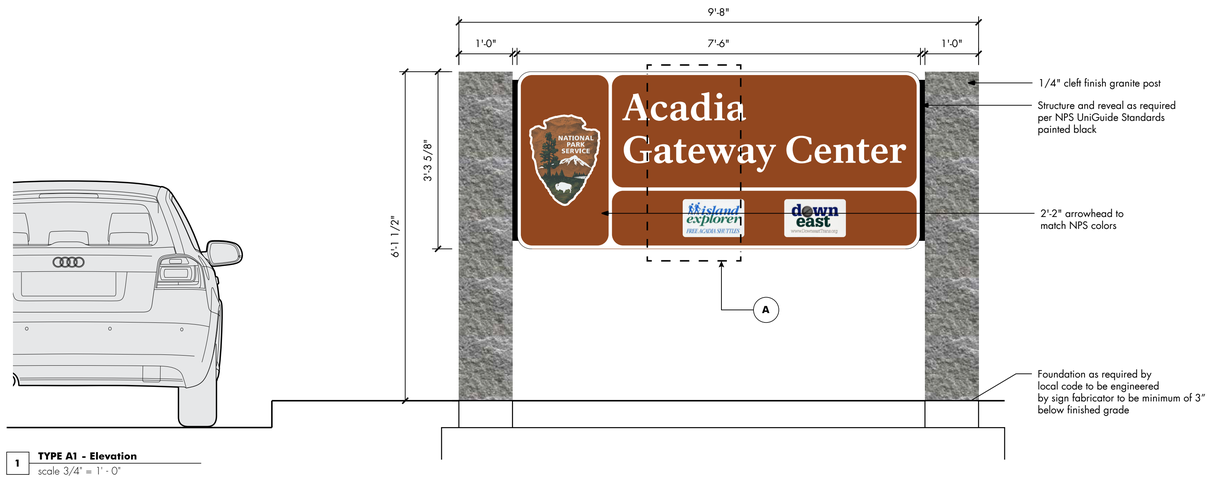

1 TYPE A1 - Elevation
scale 3/4" = 1' - 0"

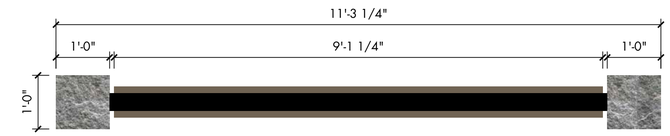

2 TYPE A1 - Top View
scale 3/4" = 1' - 0"

3 TYPE A2 - Top View
scale 1" = 1' - 0"

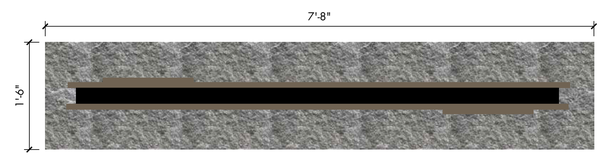

4 Type A2 - Top View
scale 1" = 1' - 0"

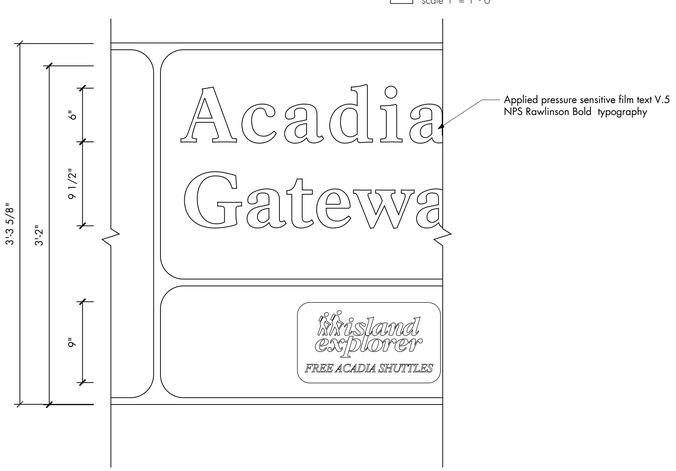

A TYPE A1 - Text Detail
scale 1 1/2" = 1' - 0"

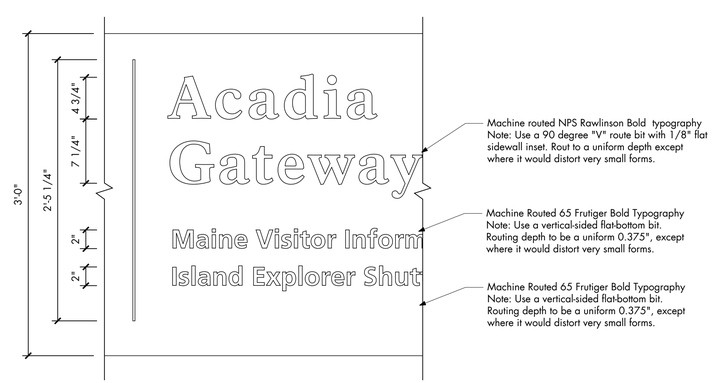

B Type A2 - Text Detail
scale 1 1/2" = 1' - 0"

PROJECT KEY PLAN

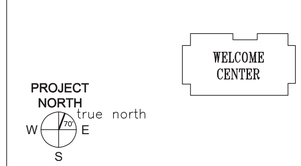

AECOM
1 FEDERAL STREET, 8TH FLOOR
BOSTON, MA 02110
617.723.1700
www.aecom.com

STATE OF MAINE
DEPARTMENT OF TRANSPORTATION

DATE

FED PIN NO: NA
WIN NO: 017163.02 & 017163.03

SIGNATURE
ARCH. LIN. NUMBER
DATE JANUARY 17, 2022

PROJECT	INFORMATION
PROGRAM	–
PROJECT MANAGER	–
DESIGNER	AECOM
CONSULTANT	–
PROJECT RESIDENT	–
CONTRACTOR	–
PROJECT COMPLETION DATE	–

MAINE DEPARTMENT OF TRANSPORTATION
ACADIA GATEWAY FACILITY
INTERMODAL AND WELCOME CENTER

EXTERIOR SIGNAGE DETAIL I - GATEWAY AND WELCOME SIGNS

SHEET NUMBER
SG107

C:\Users\stacy.zung\OneDrive - AECOM Directory\Acadia\06 Construction Docs_Titleblock\Titleblock 24X36.dwg Jan 13, 2022 - 9:05am

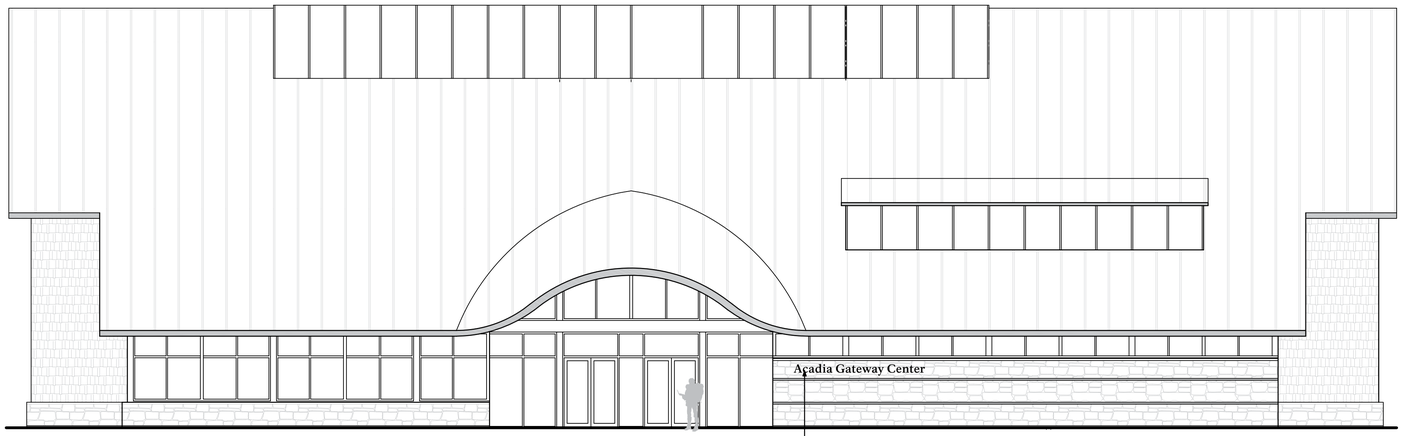

1 **TYPE A3 - Context Elevation**
scale 1/8" = 1' - 0"

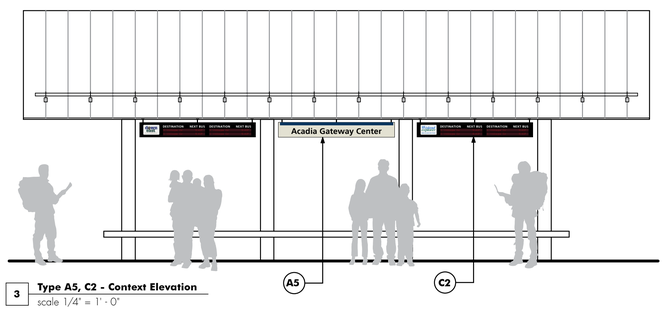

3 **Type A5, C2 - Context Elevation**
scale 1/4" = 1' - 0"

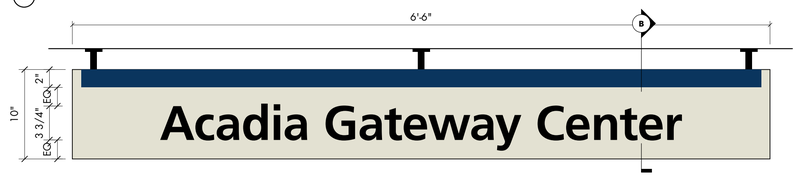

4 **Type A5 - Detail**
scale 1 1/2" = 1' - 0" Type A5

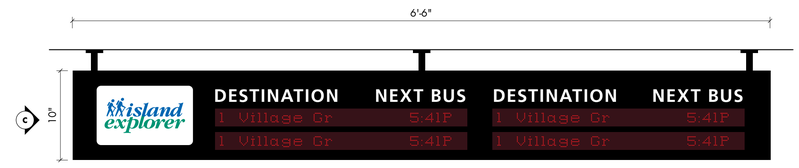

5 **Type C2 - Detail**
scale 1 1/2" = 1' - 0" Type C2

2 **TYPE A3 - Detail**
scale 1" = 1' - 0"

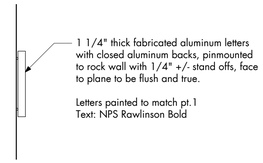

A **Type A3 - End View**
scale 1" = 1' - 0"

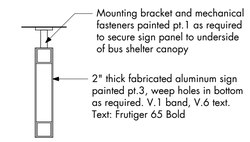

B **Type A5 - Section**
scale 1 1/2" = 1' - 0" Type A5

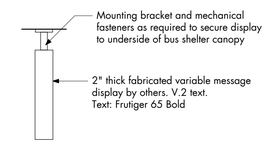

C **Type C2 - End View**
scale 1 1/2" = 1' - 0"

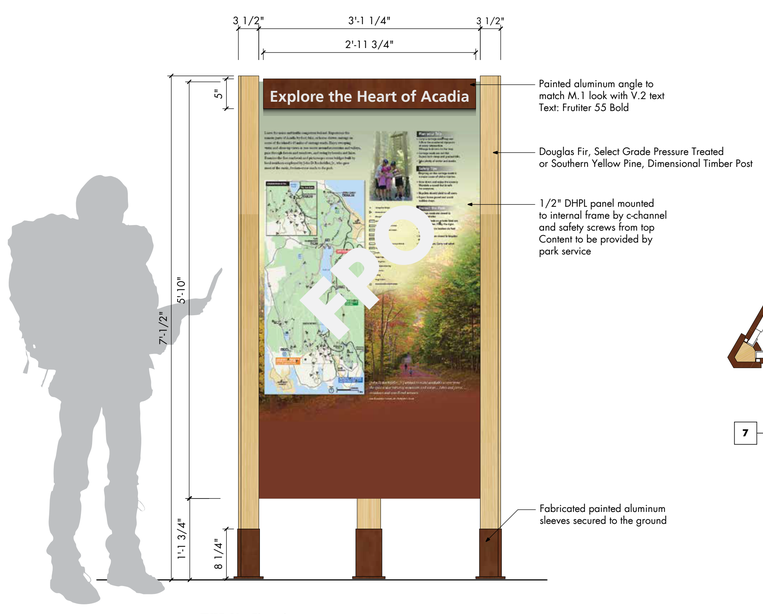

6 **TYPE C3 - Elevation**
scale 1" = 1' - 0"

Note:
Final content to be provided by others

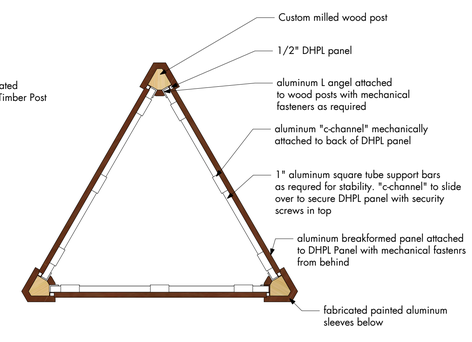

7 **TYPE C3 - Top View**
scale 1" = 1' - 0"

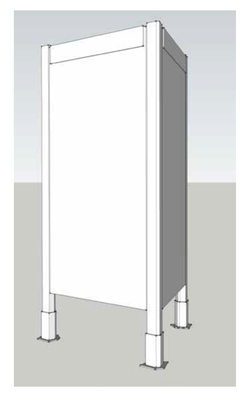

D **TYPE C3 - Massing Study**
scale NTS

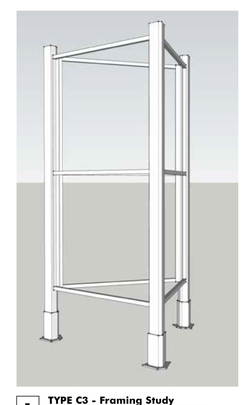

E **TYPE C3 - Framing Study**
scale NTS

PROJECT KEY PLAN

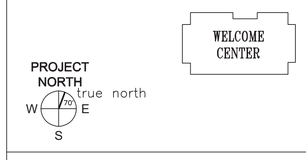

AECOM
1 FEDERAL STREET, 8TH FLOOR
BOSTON, MA 02110
617.723.1700
www.aecom.com

STATE OF MAINE
DEPARTMENT OF TRANSPORTATION

DATE

FED PIN NO: NA

WIN NO: 017163.02 & 017163.03

SIGNATURE
–

ARCH. LIN. NUMBER
–

DATE JANUARY 17, 2022

PROJECT INFORMATION	
PROGRAM	–
PROJECT MANAGER	–
DESIGNER	AECOM
CONSULTANT	–
PROJECT RESIDENT	–
CONTRACTOR	–
PROJECT COMPLETION DATE	–

MAINE DEPARTMENT OF TRANSPORTATION
ACADIA GATEWAY FACILITY
INTERMODAL AND WELCOME CENTER

EXTERIOR SIGNAGE DETAIL II - BUILDING, BUS SHELTER, KIOSKS

SHEET NUMBER
SG108

C:\Users\stacy.zung\OneDrive - AECOM Directory\Acadia\06 Construction Docs_Titleblock\Titleblock 24X36.dwg Jan 13, 2022 - 8:05am

1 **TYPE A6 - Context Elevation**
scale 1/8" = 1' - 0"

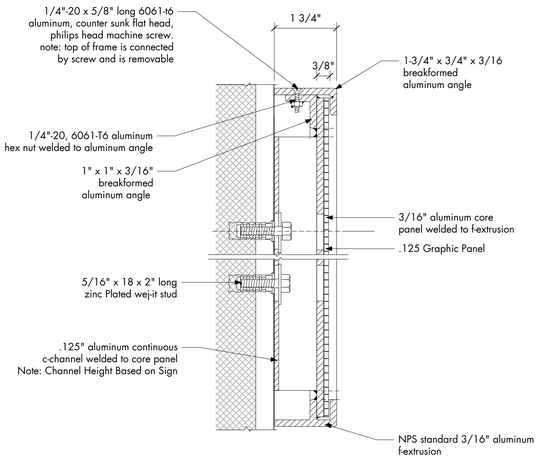

A **TYPE A6 - Section**
scale 6" = 1' - 0"

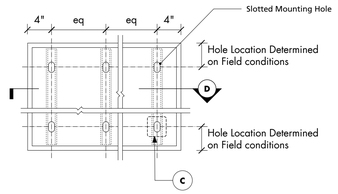

B **TYPE A6 - Frame Mounting Hole Locations**
scale 1" = 1' - 0"

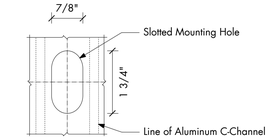

C **TYPE A6 - Detail at Slotted Hole**
scale 6" = 1' - 0"

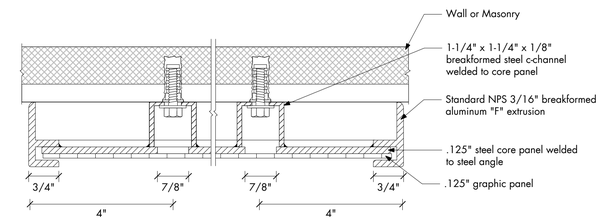

D **TYPE A6 - Detail at Slotted Hole**
scale 6" = 1' - 0"

2 **TYPE A6 - Type Detail**
scale 1 1/2" = 1' - 0" Type A6

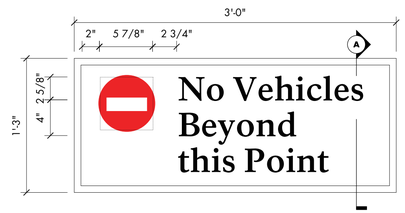

5 **TYPE A6.1 - Type Detail**
scale 1 1/2" = 1' - 0" Type A6.1

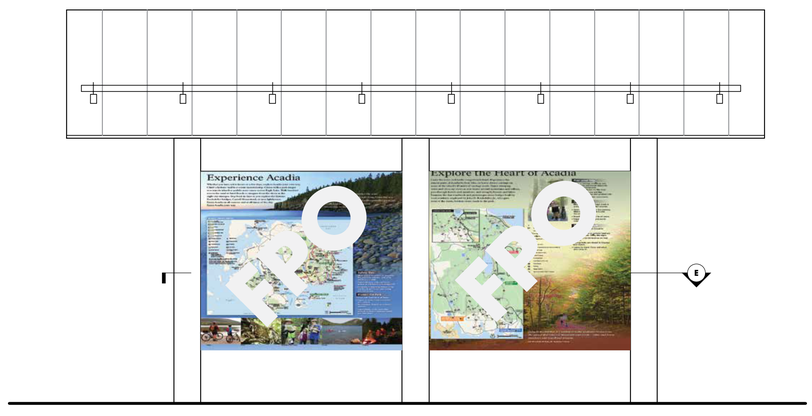

3 **TYPE C1 - Context Elevation**
scale 1/2" = 1' - 0" Type C1

Note:
Final content to be provided by NPS

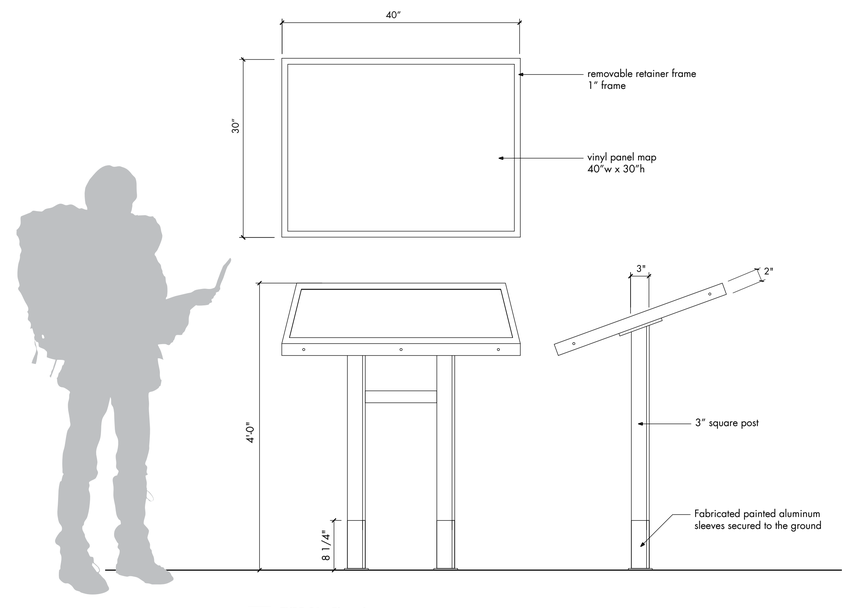

4 **TYPE C4 - Elevation**
scale 1" = 1' - 0"

Note:
Final content to be provided by others. Basis of design is Neokraft Interpretive Display, with 30"x40" opening for map panel, and removable retainer frame.

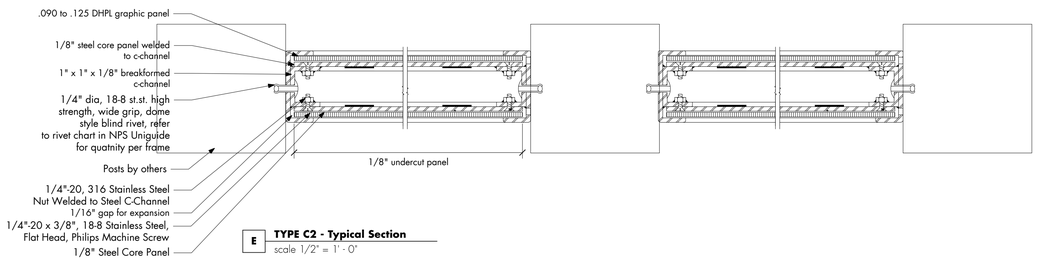

E **TYPE C2 - Typical Section**
scale 1/2" = 1' - 0"

PROJECT KEY PLAN

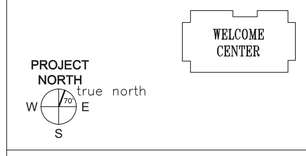

AECOM
1 FEDERAL STREET, 8TH FLOOR
BOSTON, MA 02110
617.723.1700
www.aecom.com

STATE OF MAINE
DEPARTMENT OF TRANSPORTATION

DATE

FED PIN NO: NA

WIN NO: 017163.02 & 017163.03

SIGNATURE –

ARCH. LIN. NUMBER –

DATE JANUARY 17, 2022

PROJECT INFORMATION	
PROGRAM	–
PROJECT MANAGER	–
DESIGNER	AECOM
CONSULTANT	–
PROJECT RESIDENT	–
CONTRACTOR	–
PROJECT COMPLETION DATE	–

MAINE DEPARTMENT OF TRANSPORTATION
ACADIA GATEWAY FACILITY
INTERMODAL AND WELCOME CENTER

EXTERIOR SIGNAGE DETAIL III - BUILDING AND INFO. CENTER

SHEET NUMBER
SG109

C:\Users\stacy.zung\OneDrive - AECOM Directory\Acadia\06 Construction Docs_Titleblock\Titleblock 24X36.dwg Jan 13, 2022 - 9:05am

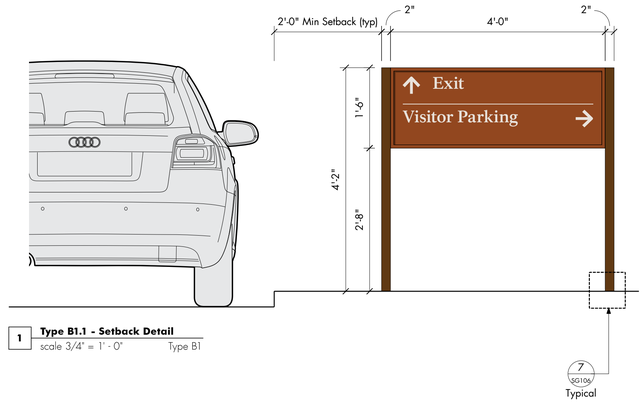

1 **Type B1.1 - Setback Detail**
scale 3/4" = 1' - 0" Type B1

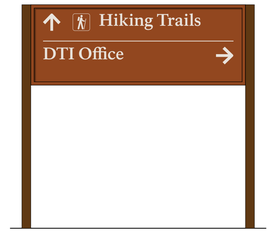

2 **TYPE B1.1 - Alt. Message**
scale 3/4" = 1' - 0"

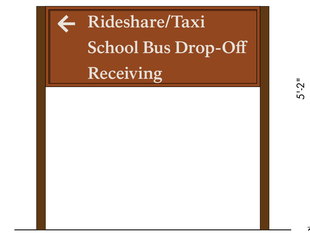

3 **TYPE B1.1 - Alt. Message**
scale 3/4" = 1' - 0"

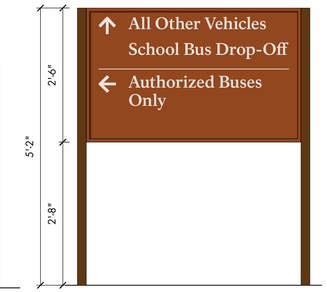

4 **Type B1.2 - Elevation**
scale 3/4" = 1' - 0"

5 **Type B1.2 - Alt. Message**
scale 3/4" = 1' - 0"

6 **Type B1.2 - Alt. Message**
scale 3/4" = 1' - 0"

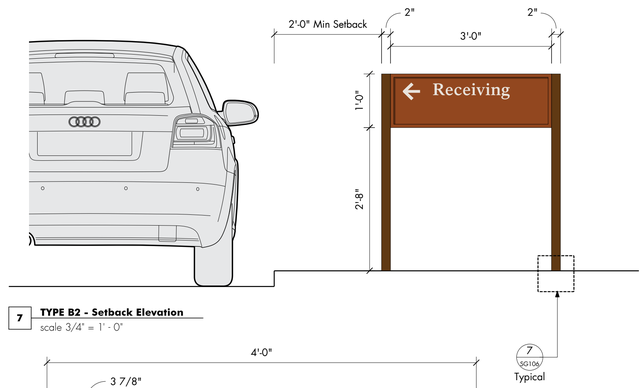

7 **TYPE B2 - Setback Elevation**
scale 3/4" = 1' - 0"

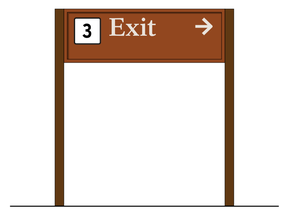

8 **TYPE B2 - Alt. Message w/ symbol**
scale 3/4" = 1' - 0"

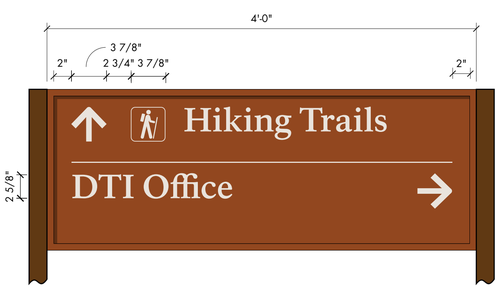

9 **TYPE B1.1- Text Layout Detail**
scale 1 1/2 " = 1' - 0"

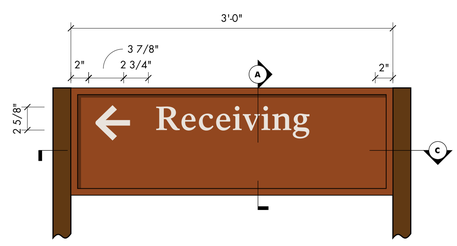

10 **TYPE B2 - Text Layout Detail**
scale 1 1/2" = 1' - 0"

11a **TYPE B1.2 - Text Layout Detail**
scale 1 1/2 " = 1' - 0"

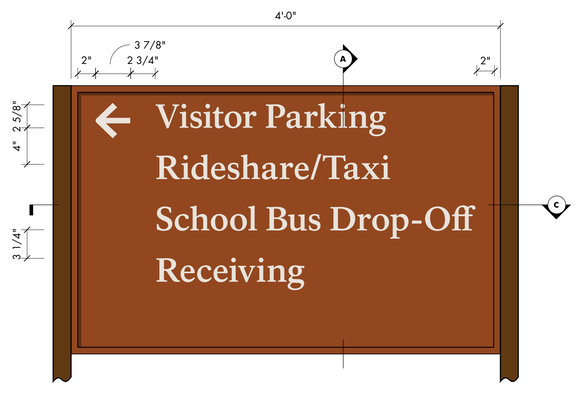

11b **TYPE B1.2 - Text Layout Detail**
scale 1 1/2 " = 1' - 0"

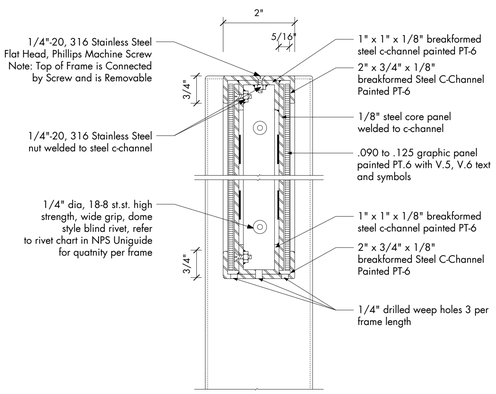

A **TYPE B1.1, B1.2, B2 - Typical Section**
scale 6" = 1' - 0"

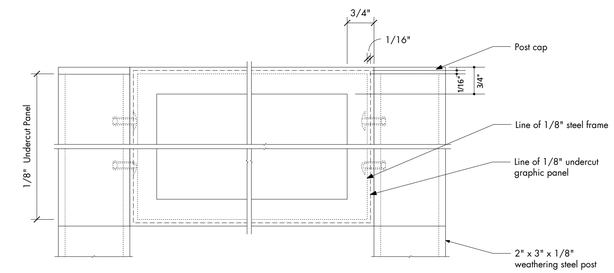

B **TYPE B1.1, B1.2, B2 - Typical Detail**
scale 6" = 1' - 0"

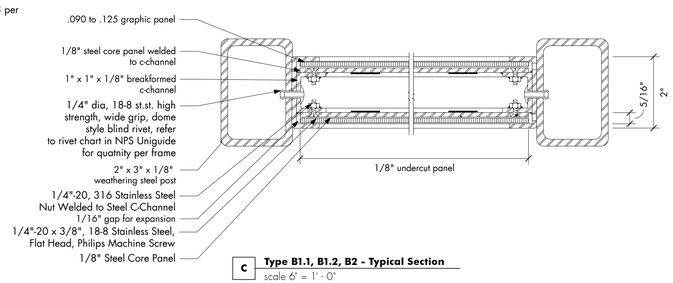

C **Type B1.1, B1.2, B2 - Typical Section**
scale 6" = 1' - 0"

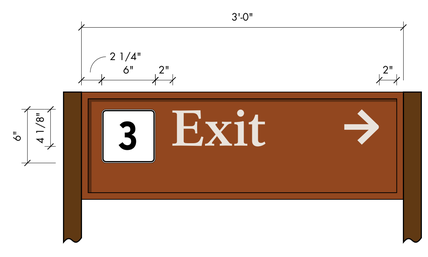

12 **Type B2 - Text Layout Detail w/ Symbol**
scale 1 1/2" = 1' - 0"

PROJECT KEY PLAN

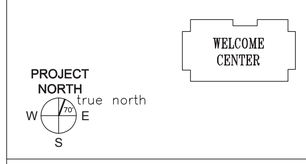

AECOM
1 FEDERAL STREET, 8TH FLOOR
BOSTON, MA 02110
617.723.1700
www.aecom.com

STATE OF MAINE
DEPARTMENT OF TRANSPORTATION

DATE	
FED PIN NO:	NA
WIN NO:	017163.02 & 017163.03

SIGNATURE	–
ARCH. LIN. NUMBER	–
DATE	JANUARY 17, 2022

PROJECT INFORMATION	
PROGRAM	–
PROJECT MANAGER	–
DESIGNER	AECOM
CONSULTANT	–
PROJECT RESIDENT	–
CONTRACTOR	–
PROJECT COMPLETION DATE	–

MAINE DEPARTMENT OF TRANSPORTATION
ACADIA GATEWAY FACILITY
INTERMODAL AND WELCOME CENTER

EXTERIOR SIGNAGE DETAIL IV - PARKING AREA

SHEET NUMBER
SG110

C:\Users\stacy.zung\OneDrive - AECOM Directory\Acadia\06 Construction Docs_Titleblock\Titleblock 24X36.dwg Jan 13, 2022 - 8:05am

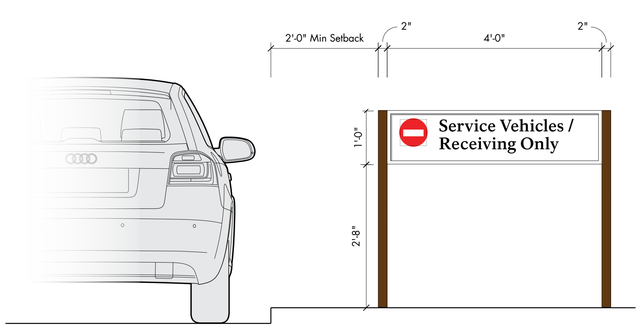

1 **TYPE D4 - Setback Elevation**
scale 3/4" = 1' - 0"

2 **TYPE D4 - Alt. Message**
scale 3/4" = 1' - 0"

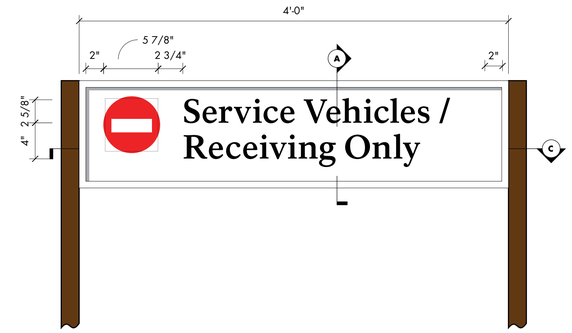

3 **TYPE D4 - Type Detail**
scale 1/2" = 1' - 0"

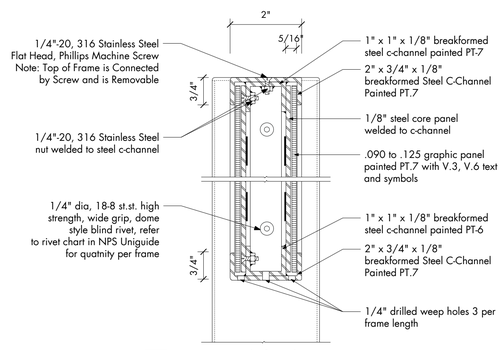

A **TYPE D4 - Typical Section**
scale 6" = 1' - 0"

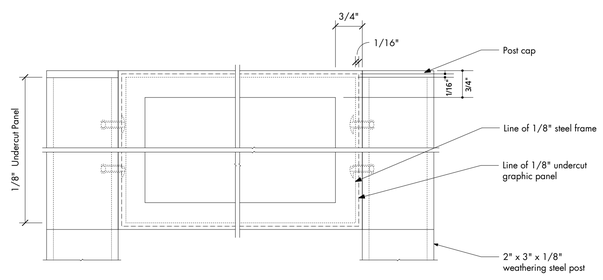

B **TYPE D4 - Typical Detail**
scale 6" = 1' - 0"

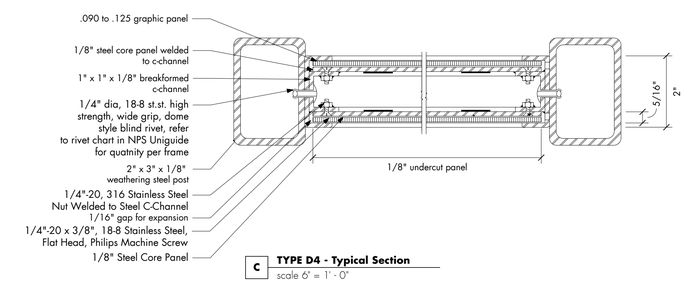

C **TYPE D4 - Typical Section**
scale 6" = 1' - 0"

PROJECT KEY PLAN

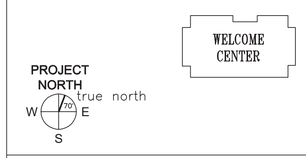

AECOM
1 FEDERAL STREET, 8TH FLOOR
BOSTON, MA 02110
617.723.1700
www.aecom.com

STATE OF MAINE
DEPARTMENT OF TRANSPORTATION

DATE

FED PIN NO: NA

WIN NO: 017163.02 & 017163.03

SIGNATURE
–

ARCH. LIN. NUMBER
–

DATE JANUARY 17, 2022

PROJECT INFORMATION	
PROGRAM	–
PROJECT MANAGER	–
DESIGNER	AECOM
CONSULTANT	–
PROJECT RESIDENT	–
CONTRACTOR	–
PROJECT COMPLETION DATE	–

MAINE DEPARTMENT OF TRANSPORTATION
ACADIA GATEWAY FACILITY
INTERMODAL AND WELCOME CENTER

EXTERIOR SIGNAGE DETAIL V - PARKING AREA

SHEET NUMBER
SG111

C:\Users\stacy.zung\OneDrive - AECOM Directory\Acadia\06 Construction Docs_Titleblock\Titleblock 24X36.dwg Jan 13, 2022 - 9:05am

1 TYPE B3 - Elevation
scale 1/2" = 1' - 0"

2 TYPE B3.1 - Type Detail
scale 1" = 1' - 0"

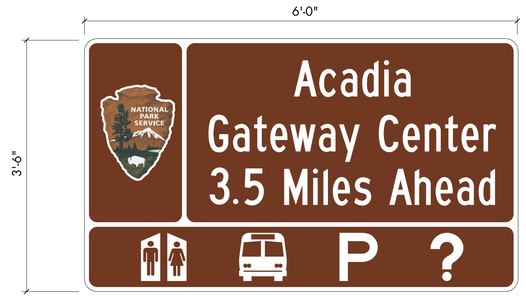

4 TYPE B3.2 - Type Detail
scale 1" = 1' - 0"

NOTE

Final locations for all three approach signs on Route 3 need to be coordinated with the MaineDOT Region 4 Traffic Engineer. They can be reached at (207) 941-4500

3 TYPE B3.1 - Type Detail - Alt. Message
scale 1" = 1' - 0"

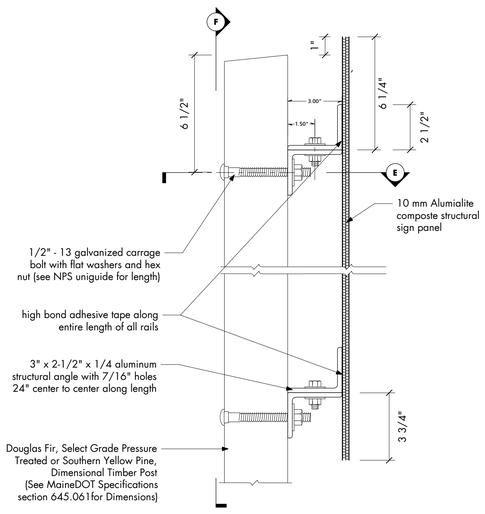

5 TYPE B3 - Typical Detail
scale 3" = 1' - 0"

Note:

All wood posts and brackets shall be pressure treated to CCA 40. On wood posts, drill holes to meet breakaway standards - see MaineDOT Standard Details 645 (09).

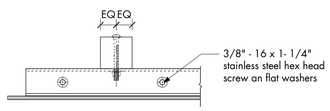

E TYPE B3 - Typical Detail
scale 1 1/2" = 1' - 0"

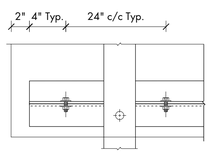

F TYPE B3 - Detail
scale 1 1/2" = 1' - 0"

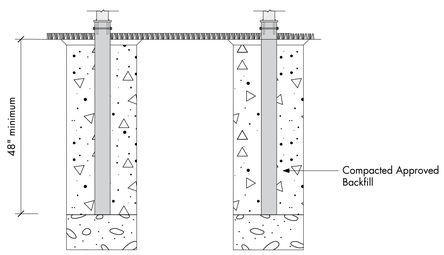

6 Typical Footing Detail all Post Mtd. Signage
scale NTS

PROJECT KEY PLAN

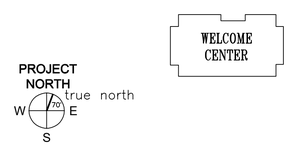

AECOM
1 FEDERAL STREET, 8TH FLOOR
BOSTON, MA 02110
617.723.1700
www.aecom.com

STATE OF MAINE
DEPARTMENT OF TRANSPORTATION

DATE

FED PIN NO: NA

WIN NO: 017163.02 & 017163.03

SIGNATURE –

ARCH. LIN. NUMBER –

DATE JANUARY 17, 2022

PROJECT INFORMATION

PROGRAM	–
PROJECT MANAGER	–
DESIGNER	AECOM
CONSULTANT	–
PROJECT RESIDENT	–
CONTRACTOR	–
PROJECT COMPLETION DATE	–

MAINE DEPARTMENT OF TRANSPORTATION
ACADIA GATEWAY FACILITY
INTERMODAL AND WELCOME CENTER

EXTERIOR SIGNAGE DETAIL VI - HIGHWAY

SHEET NUMBER
SG112

C:\Users\stacy.zung\OneDrive - AECOM Directory\Acadia\06 Construction Docs_Titleblock\Titleblock 24X36.dwg Jan 13, 2022 - 8:05am

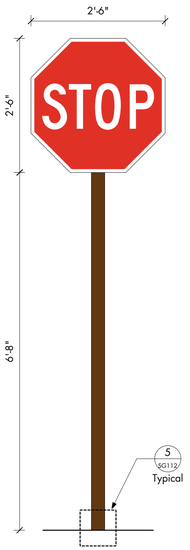

1 **TYPE D1 - Elevation**
scale 3/4" = 1' - 0"

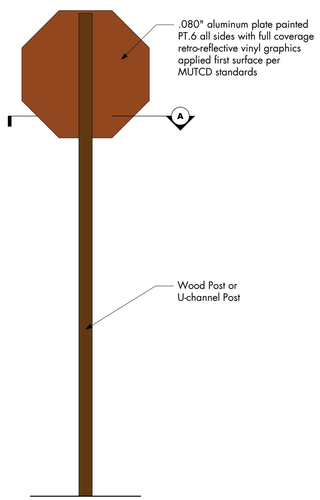

2 **TYPE D1 - Back Elevation**
scale 3/4" = 1' - 0"

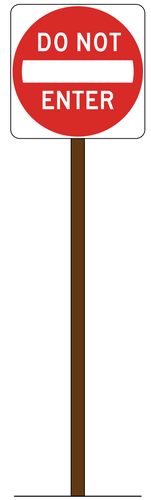

3 **TYPE D2 - Elevation**
scale 3/4" = 1' - 0"

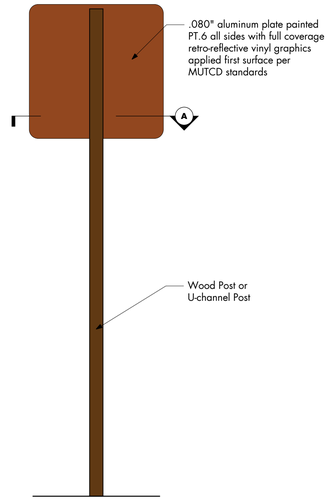

4 **TYPE D2 - Back Elevation**
scale 3/4" = 1' - 0"

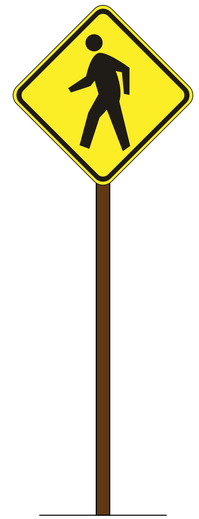

5 **TYPE D3 - Elevation**
scale 3/4" = 1' - 0"

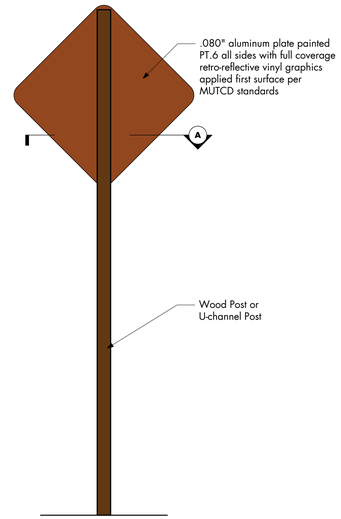

6 **Type D3 - Back Elevation**
scale 3/4" = 1' - 0"

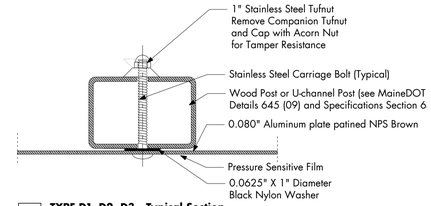

A **TYPE D1, D2, D3 - Typical Section**
scale 6" = 1' - 0"

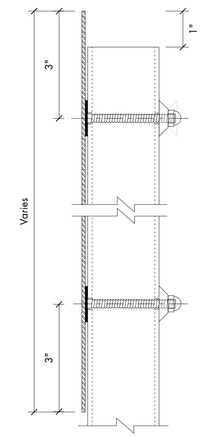

B **TYPE D1, D2, D3, D5, D6, D7 - Detail**
scale 6" = 1' - 0"

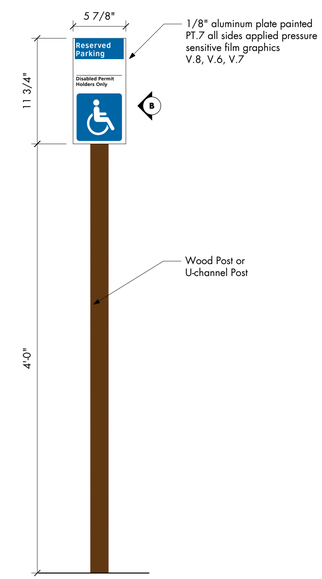

7 **TYPE D5 - Elevation**
scale 1 1/2" = 1' - 0"

8 **TYPE D5 - Detail**
scale 6" = 1' - 0"

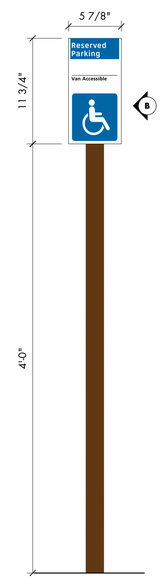

9 **TYPE D5 - Elevation**
scale 1 1/2" = 1' - 0"

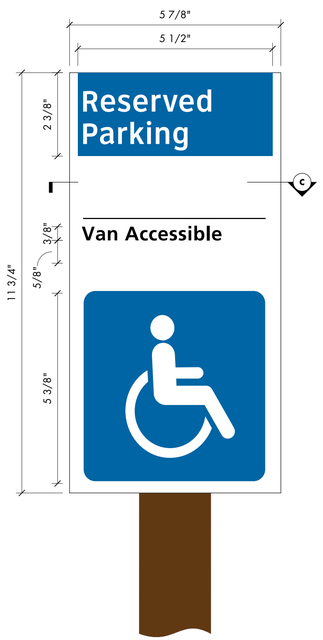

10 **TYPE D5 - Detail**
scale 6" = 1' - 0"

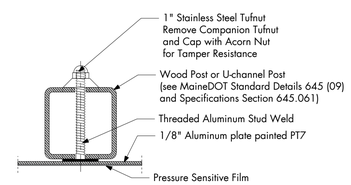

C **TYPE D5, D6, D7 - Typical Section**
scale 6" = 1' - 0"

PROJECT KEY PLAN

AECOM
1 FEDERAL STREET, 8TH FLOOR
BOSTON, MA 02110
617.723.1700
www.aecom.com

STATE OF MAINE
DEPARTMENT OF TRANSPORTATION

DATE

FED PIN NO: NA

WIN NO: 017163.02 & 017163.03

PROJECT INFORMATION		SIGNATURE
PROGRAM	–	–
PROJECT MANAGER	–	ARCH. LIN. NUMBER
DESIGNER	AECOM	–
CONSULTANT	–	DATE JANUARY 17, 2022
PROJECT RESIDENT	–	
CONTRACTOR	–	
PROJECT COMPLETION DATE	–	

MAINE DEPARTMENT OF TRANSPORTATION
ACADIA GATEWAY FACILITY
INTERMODAL AND WELCOME CENTER

EXTERIOR SIGNAGE DETAIL VII - REGULATORY AND PARKING ID

SHEET NUMBER
SG113

C:\Users\stacy.zung\OneDrive - AECOM Directory\Acadia\06 Construction Docs_Titleblock\Titleblock 24X36.dwg Jan 13, 2022 - 9:05am

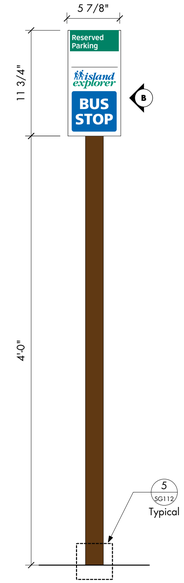

1 **TYPE D6.1 - Elevation**
scale 1 1/2" = 1' - 0"

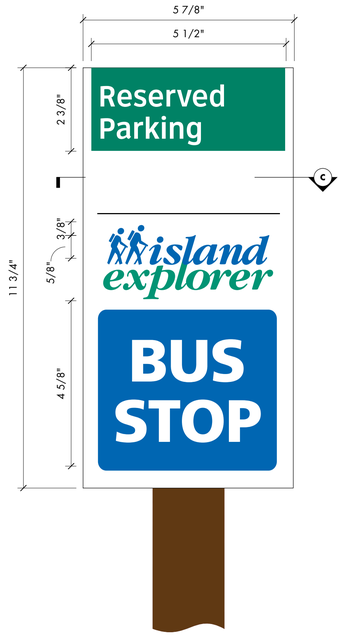

2 **TYPE D6.1 - Detail**
scale 6" = 1' - 0"

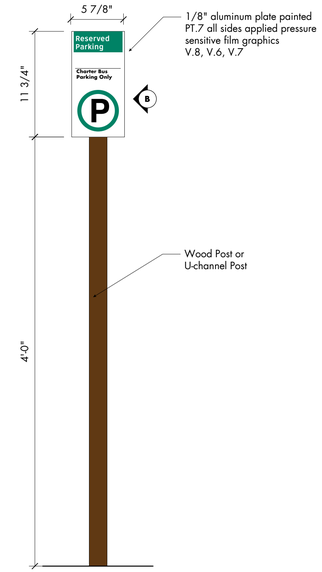

3 **TYPE D6.2 - Elevation**
scale 1 1/2" = 1' - 0"

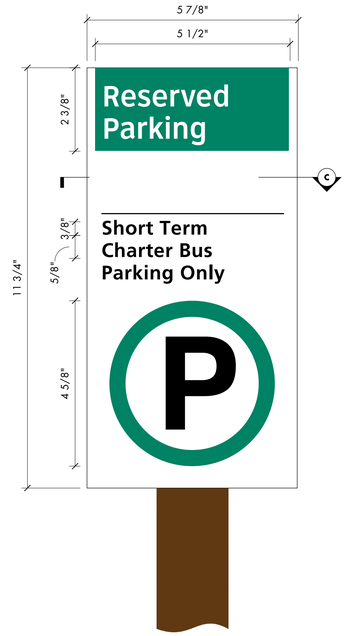

4 **TYPE D6.2 - Detail**
scale 6" = 1' - 0"

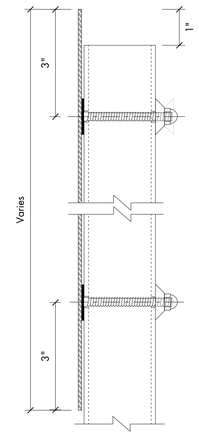

B **TYPE D1, D2, D3, D5, D6, D7 - Detail**
scale 6" = 1' - 0"

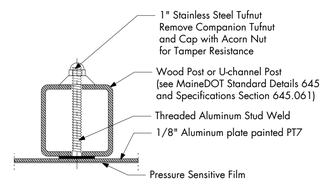

C **TYPE D5, D6, D7 - Typical Section**
scale 6" = 1' - 0"

PROJECT KEY PLAN

AECOM
1 FEDERAL STREET, 8TH FLOOR
BOSTON, MA 02110
617.723.1700
www.aecom.com

STATE OF MAINE
DEPARTMENT OF TRANSPORTATION

DATE

FED PIN NO: NA

WIN NO: 017163.02 & 017163.03

PROJECT INFORMATION		SIGNATURE
PROGRAM	–	–
PROJECT MANAGER	–	ARCH. LIN. NUMBER
DESIGNER	AECOM	–
CONSULTANT	–	DATE
PROJECT RESIDENT	–	JANUARY 17, 2022
CONTRACTOR	–	
PROJECT COMPLETION DATE	–	

MAINE DEPARTMENT OF TRANSPORTATION
ACADIA GATEWAY FACILITY
INTERMODAL AND WELCOME CENTER

EXTERIOR SIGNAGE DETAIL VIII - PARKING ID

SHEET NUMBER
SG114

C:\Users\stacy.zung\OneDrive - AECOM Directory\Acadia\06 Construction Docs_Titleblock\Titleblock 24X36.dwg Jan 13, 2022 - 9:05am

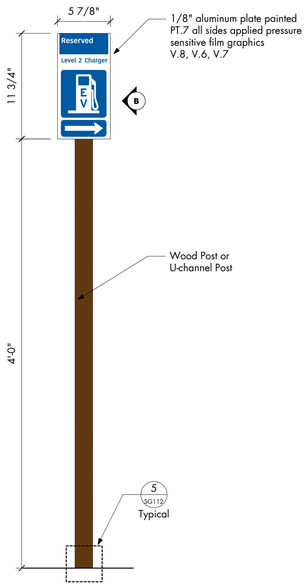

1 TYPE D9.1 - Elevation
scale 1 1/2" = 1' - 0"

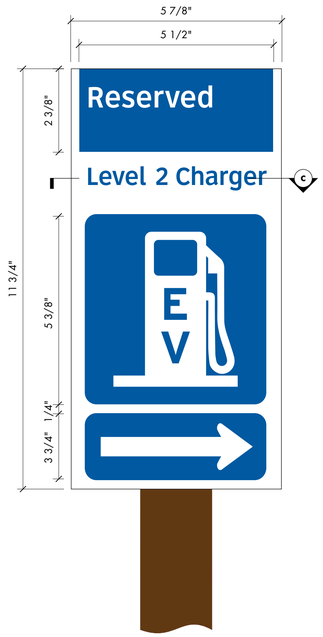

2 TYPE D9.1 - Detail
scale 6" = 1' - 0"

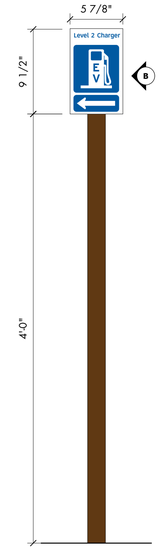

3 TYPE D9.2 - Elevation
scale 1 1/2" = 1' - 0"

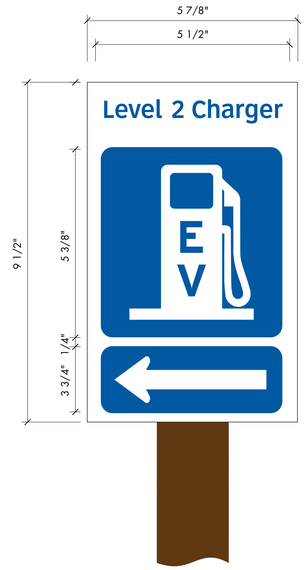

4 TYPE D9.2 - Detail
scale 6" = 1' - 0"

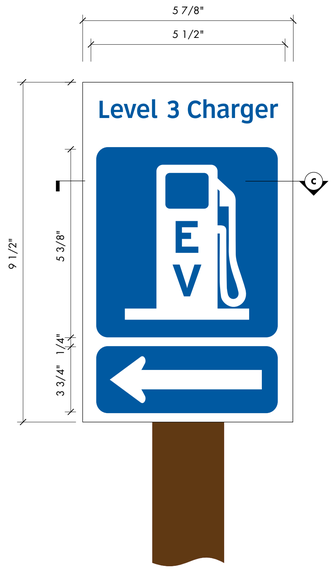

5 TYPE D9.2 - Detail
scale 6" = 1' - 0"

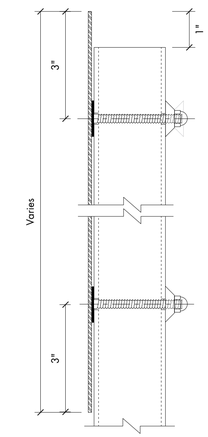

B TYPE D1, D2, D3, D5, D6, D7 - Detail
scale 6" = 1' - 0"

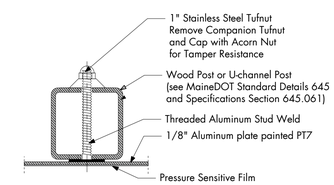

C TYPE D5, D6, D7 - Typical Section
scale 6" = 1' - 0"

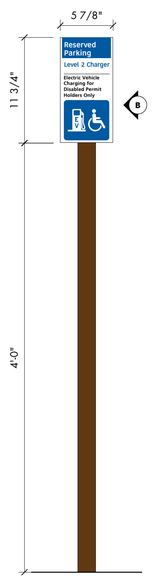

6 TYPE D9.3 - Elevation
scale 1 1/2" = 1' - 0"

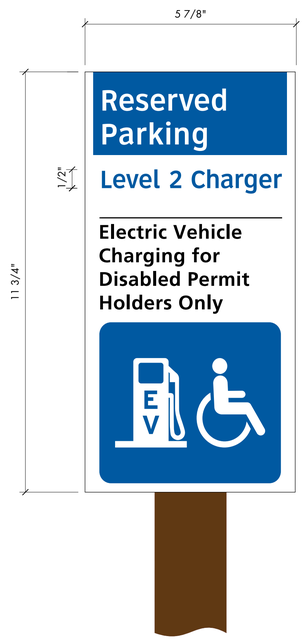

7 TYPE D9.3 - Detail
scale 6" = 1' - 0"

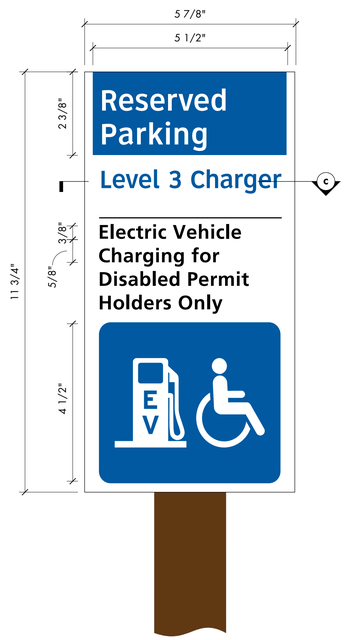

8 TYPE D9.3 - Alt. Message
scale 6" = 1' - 0"

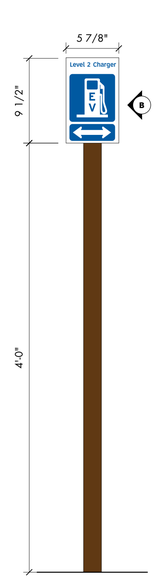

9 TYPE D9.4 - Elevation
scale 1 1/2" = 1' - 0"

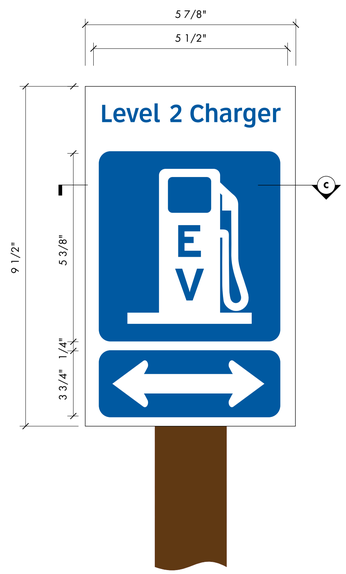

10 TYPE D9.4 - Detail
scale 6" = 1' - 0"

PROJECT KEY PLAN

AECOM
1 FEDERAL STREET, 8TH FLOOR
BOSTON, MA 02110
617.723.1700
www.aecom.com

STATE OF MAINE
DEPARTMENT OF TRANSPORTATION

DATE

FED PIN NO: NA

WIN NO: 017163.02 & 017163.03

PROJECT INFORMATION		SIGNATURE
PROGRAM	–	–
PROJECT MANAGER	–	ARCH. LIN. NUMBER
DESIGNER	AECOM	–
CONSULTANT	–	DATE JANUARY 17, 2022
PROJECT RESIDENT	–	
CONTRACTOR	–	
PROJECT COMPLETION DATE	–	

MAINE DEPARTMENT OF TRANSPORTATION
ACADIA GATEWAY FACILITY
INTERMODAL AND WELCOME CENTER

EXTERIOR SIGNAGE DETAIL IX - PARKING ID

SHEET NUMBER
SG115

C:\Users\stacy.zung\OneDrive - AECOM Directory\Acadia\06 Construction Docs_Titleblock\Titleblock 24X36.dwg Jan 13, 2022 - 9:05am

1 Location Plan Level 1
scale 1/8" = 1'-0"

PROJECT KEY PLAN

AECOM
1 FEDERAL STREET, 8TH FLOOR
BOSTON, MA 02110
617.723.1700
www.aecom.com

STATE OF MAINE
DEPARTMENT OF TRANSPORTATION

DATE

FED PIN NO: NA

WIN NO: 017163.02 & 017163.03

PROJECT INFORMATION		
PROGRAM	–	SIGNATURE
PROJECT MANAGER	–	–
DESIGNER	AECOM	ARCH. LIN. NUMBER
CONSULTANT	–	–
PROJECT RESIDENT	–	–
CONTRACTOR	–	–
PROJECT COMPLETION DATE	–	DATE JANUARY 17, 2022

MAINE DEPARTMENT OF TRANSPORTATION
ACADIA GATEWAY FACILITY
INTERMODAL AND WELCOME CENTER

INTERIOR SIGNAGE PLAN I - BASEMENT LEVEL

SHEET NUMBER

SG116

C:\Users\stacy.zung\OneDrive - AECOM Directory\Acadia\06 Construction Docs_Titleblock\Titleblock 24X36.dwg Jan 13, 2022 - 9:05am

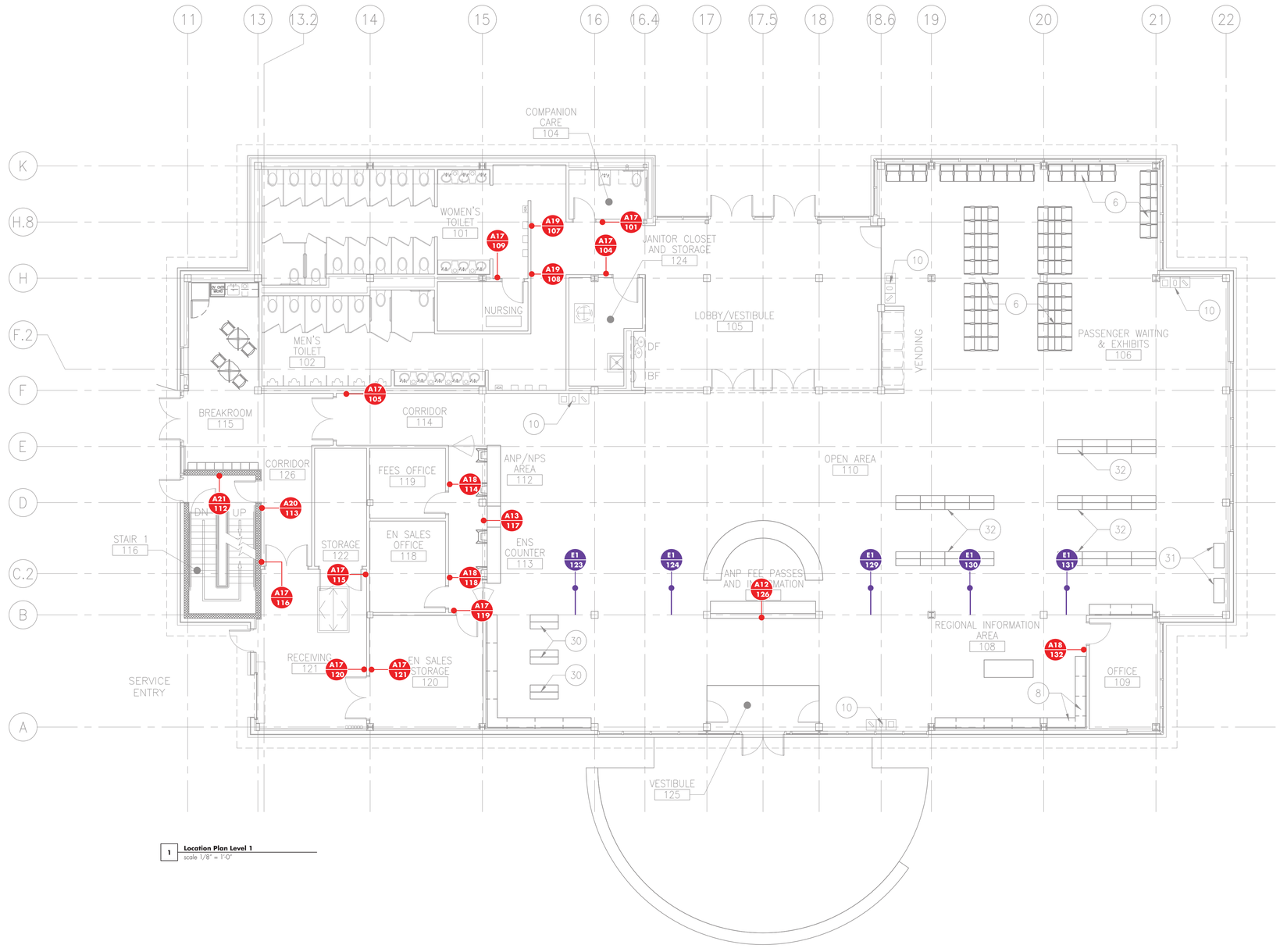

1 **Location Plan Level 1**
scale 1/8" = 1'-0"

PROJECT KEY PLAN

AECOM
1 FEDERAL STREET, 8TH FLOOR
BOSTON, MA 02110
617.723.1700
www.aecom.com

STATE OF MAINE
DEPARTMENT OF TRANSPORTATION

DATE

FED PIN NO: NA

WIN NO: 017163.02 & 017163.03

PROJECT	INFORMATION
PROGRAM	–
PROJECT MANAGER	–
DESIGNER	AECOM
CONSULTANT	–
PROJECT RESIDENT	–
CONTRACTOR	–
PROJECT COMPLETION DATE	–

SIGNATURE
–
ARCH. LIN. NUMBER
–
DATE JANUARY 17, 2022

MAINE DEPARTMENT OF TRANSPORTATION
ACADIA GATEWAY FACILITY
INTERMODAL AND WELCOME CENTER

INTERIOR SIGNAGE PLAN II - FIRST LEVEL

SHEET NUMBER
SG117

C:\Users\stacy.zung\OneDrive - AECOM Directory\Acadia\06 Construction Docs_Titleblock\Titleblock 24X36.dwg Jan 13, 2022 - 9:05am

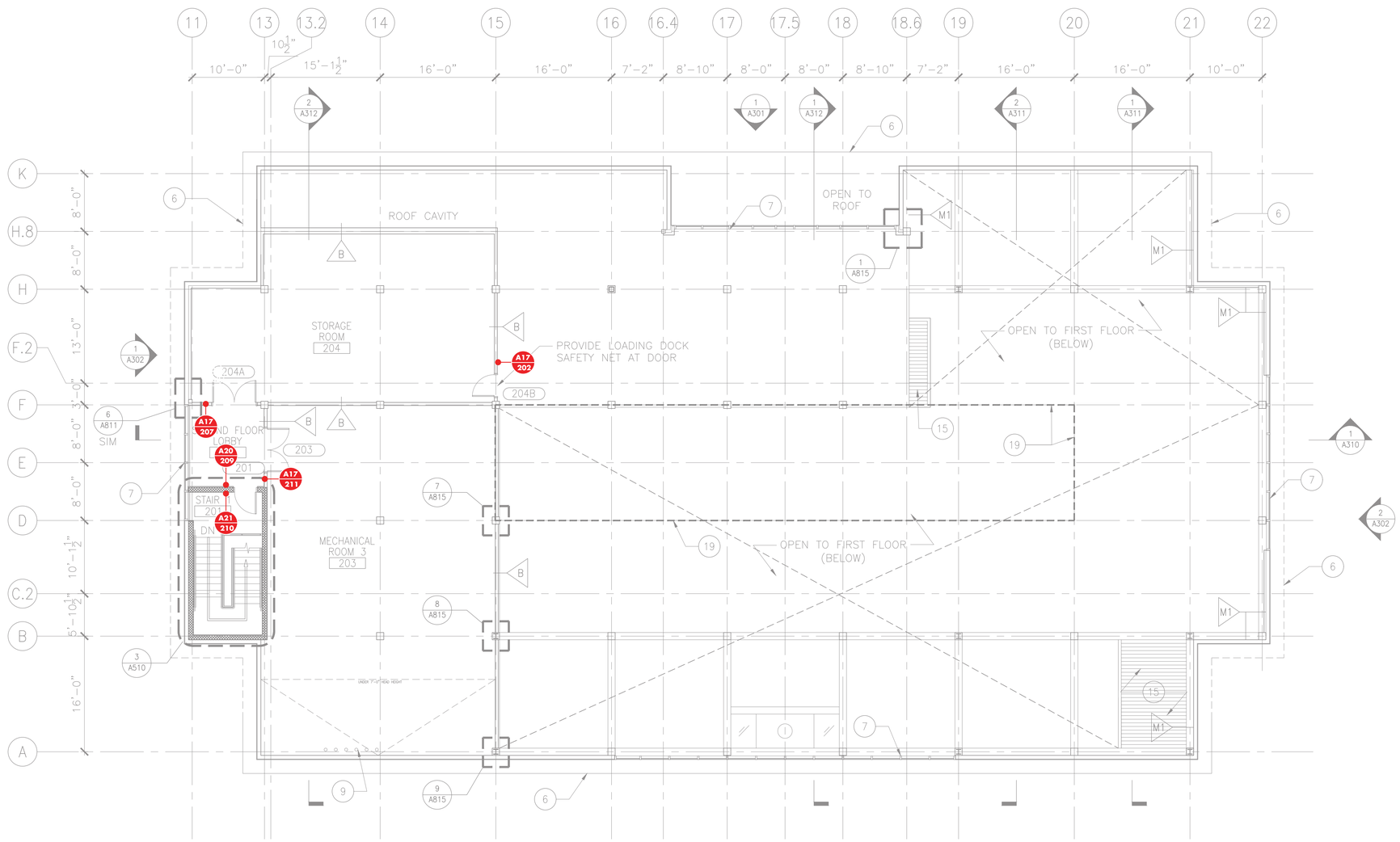

1 **Location Plan Level 1**
scale 1/8" = 1'-0"

PROJECT KEY PLAN

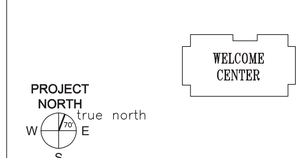

AECOM
1 FEDERAL STREET, 8TH FLOOR
BOSTON, MA 02110
617.723.1700
www.aecom.com

STATE OF MAINE
DEPARTMENT OF TRANSPORTATION

DATE

FED PIN NO: NA

WIN NO: 017163.02 & 017163.03

SIGNATURE –

ARCH. LIN. NUMBER –

DATE JANUARY 17, 2022

PROJECT	INFORMATION
PROGRAM	–
PROJECT MANAGER	–
DESIGNER	AECOM
CONSULTANT	–
PROJECT RESIDENT	–
CONTRACTOR	–
PROJECT COMPLETION DATE	–

MAINE DEPARTMENT OF TRANSPORTATION
ACADIA GATEWAY FACILITY
INTERMODAL AND WELCOME CENTER

INTERIOR SIGNAGE PLAN III - SECOND LEVEL

SHEET NUMBER

SG118

C:\Users\stacy.zung\OneDrive - AECOM Directory\Acadia\06 Construction Docs_Titleblock\Titleblock 24X36.dwg Jan 13, 2022 - 9:05am

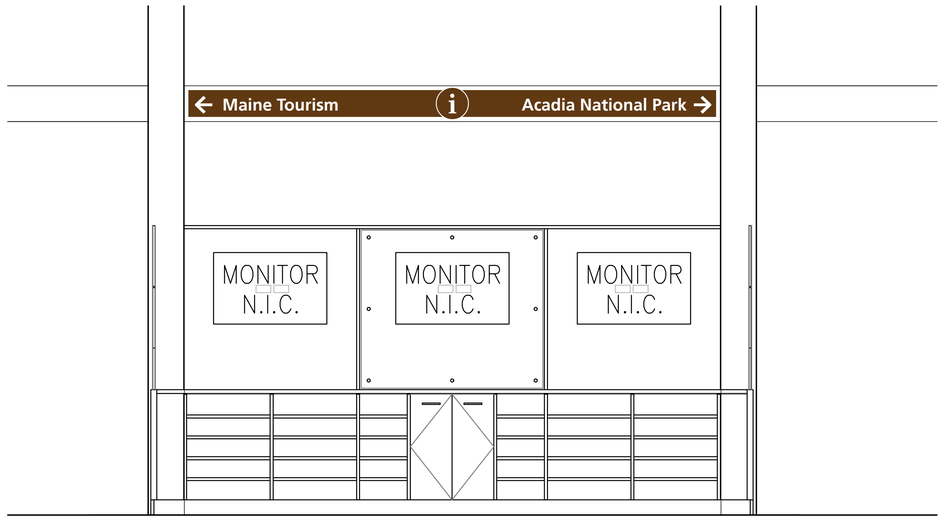

1 **TYPE A12 - Context Elevation**
scale 1/2" = 1' - 0"

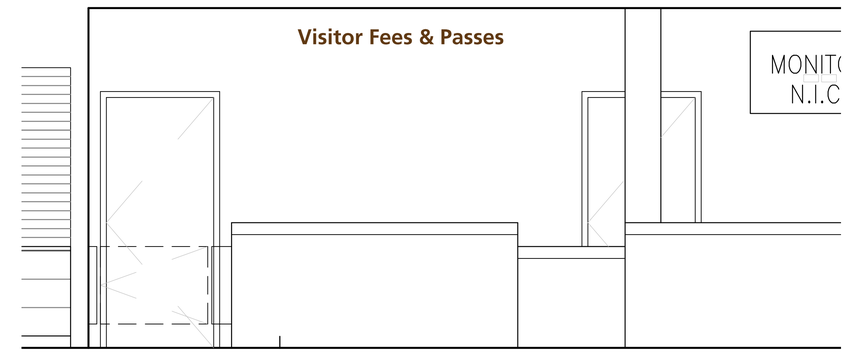

2 **TYPE A13 - Context Elevation**
scale 1/2" = 1' - 0"

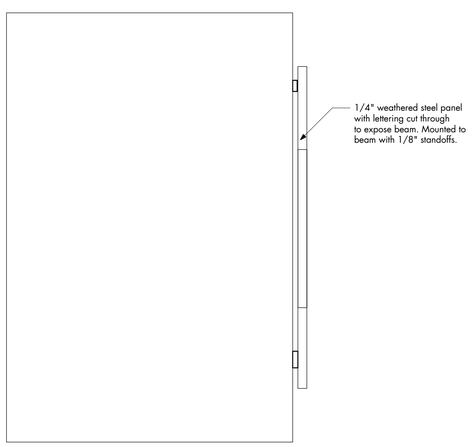

A **TYPE A12 - End View**
scale 6" = 1' - 0"

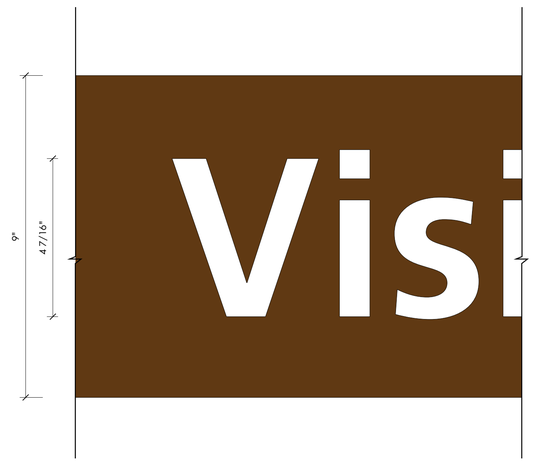

B **TYPE A12 - Type Detail**
scale 6" = 1' - 0"

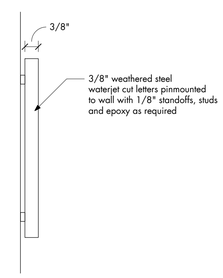

C **TYPE A13 - End View**
scale 6" = 1' - 0"

D **TYPE A13 - Type Detail**
scale 6" = 1' - 0"

PROJECT KEY PLAN

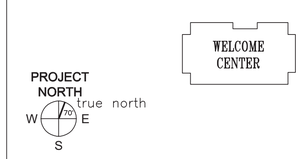

AECOM
1 FEDERAL STREET, 8TH FLOOR
BOSTON, MA 02110
617.723.1700
www.aecom.com

STATE OF MAINE
DEPARTMENT OF TRANSPORTATION

DATE

FED PIN NO: NA

WIN NO: 017163.02 & 017163.03

SIGNATURE
–

ARCH. LIN. NUMBER
–

DATE JANUARY 17, 2022

PROJECT INFORMATION	
PROGRAM	–
PROJECT MANAGER	–
DESIGNER	AECOM
CONSULTANT	–
PROJECT RESIDENT	–
CONTRACTOR	–
PROJECT COMPLETION DATE	–

MAINE DEPARTMENT OF TRANSPORTATION
ACADIA GATEWAY FACILITY
INTERMODAL AND WELCOME CENTER

INTERIOR SIGNAGE DETAIL I -
OVERHEAD IDENTIFICATION

SHEET NUMBER
SG119

C:\Users\stacy.zung\OneDrive - AECOM Directory\Acadia\06 Construction Docs_Titleblock\Titleblock 24X36.dwg Jan 13, 2022 - 9:05am

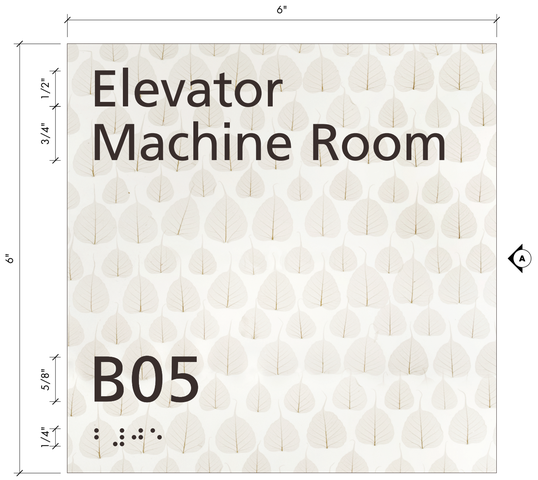

1 **TYPE A17 - Elevation**
scale Full Size

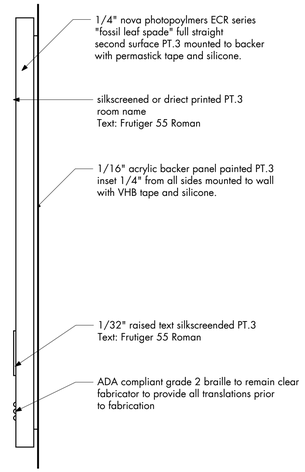

A **TYPE A17 - End View**
scale Full Size

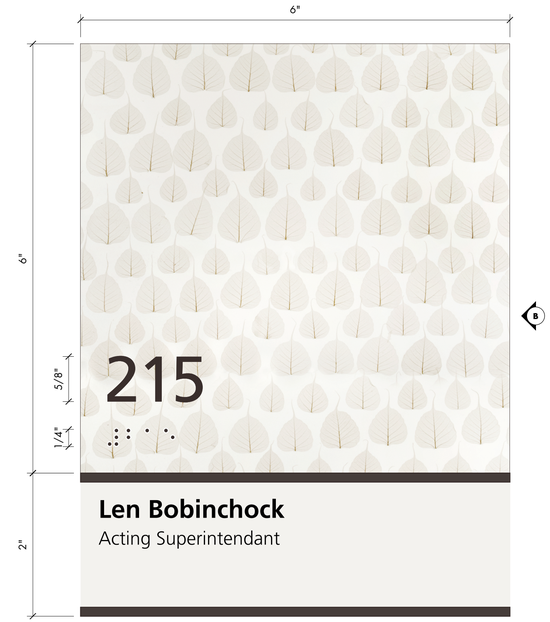

2 **TYPE A18 - Elevation**
scale Full Size

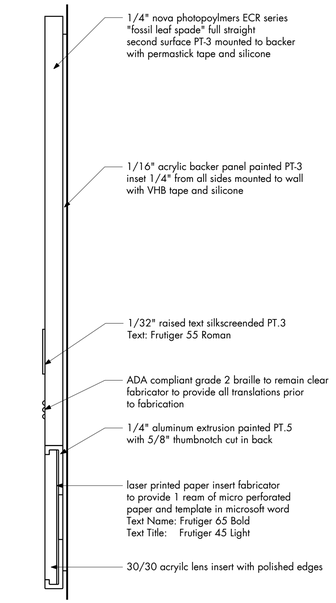

B **TYPE A18 - Elevation**
scale Full Size

4 **TYPE A19 - Elevation**
scale Full Size

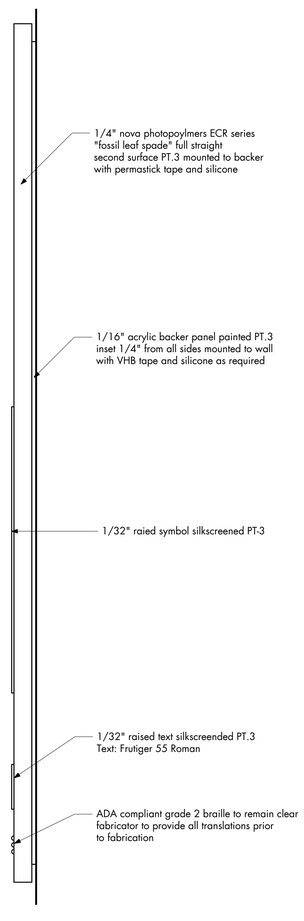

C **TYPE A19 - End View**
scale Full Size

5 **TYPE A19 - Alt. Message**
scale 6" = 1' - 0"

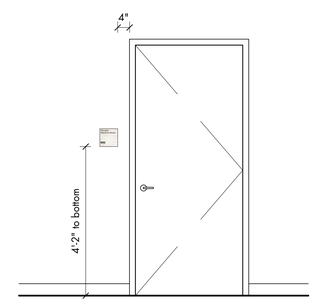

6 **TYPE A17, A19, A20 - Typ. Mounting Height**
scale 1/2" = 1' - 0"

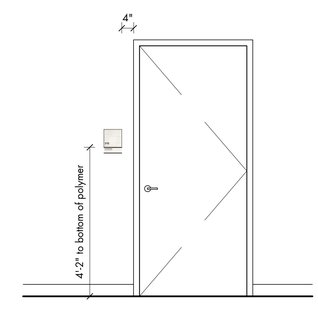

7 **TYPE A18 - Mounting Height**
scale 1/2" = 1' - 0"

PROJECT KEY PLAN

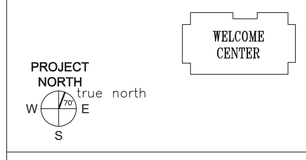

AECOM
1 FEDERAL STREET, 8TH FLOOR
BOSTON, MA 02110
617.723.1700
www.aecom.com

STATE OF MAINE
DEPARTMENT OF TRANSPORTATION

DATE

FED PIN NO: NA

WIN NO: 017163.02 & 017163.03

SIGNATURE

ARCH. LIN. NUMBER

DATE JANUARY 17, 2022

PROJECT INFORMATION	
PROGRAM	–
PROJECT MANAGER	–
DESIGNER	AECOM
CONSULTANT	–
PROJECT RESIDENT	–
CONTRACTOR	–
PROJECT COMPLETION DATE	–

MAINE DEPARTMENT OF TRANSPORTATION
ACADIA GATEWAY FACILITY
INTERMODAL AND WELCOME CENTER

INTERIOR SIGNAGE DETAIL II - ROOM ID

SHEET NUMBER
SG120

C:\Users\stacy.zung\OneDrive - AECOM Directory\Acadia\06 Construction Docs_Titleblock\Titleblock 24X36.dwg Jan 13, 2022 - 9:05am

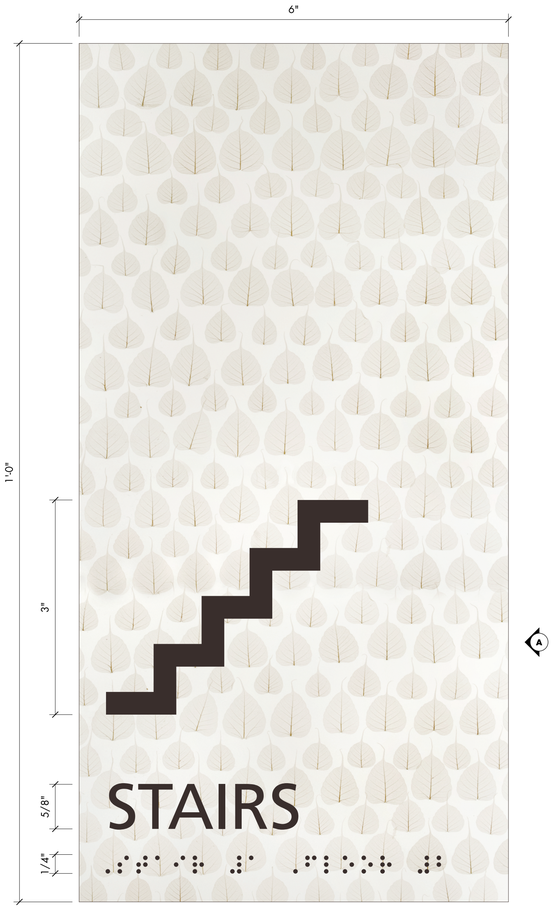

1 **TYPE A20 - Elevation**
scale Full Size

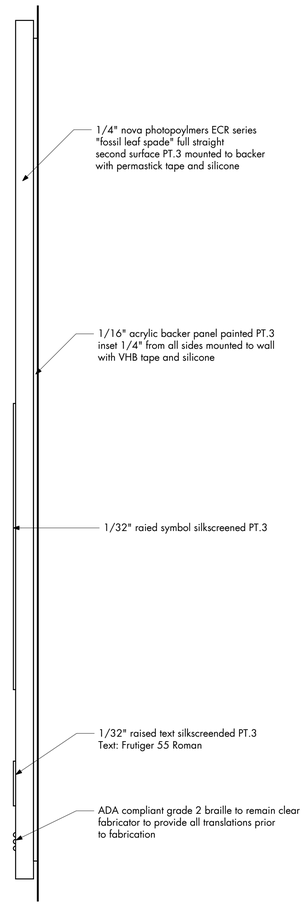

A **TYPE A20, D9 - Side Elevation**
scale Full Size

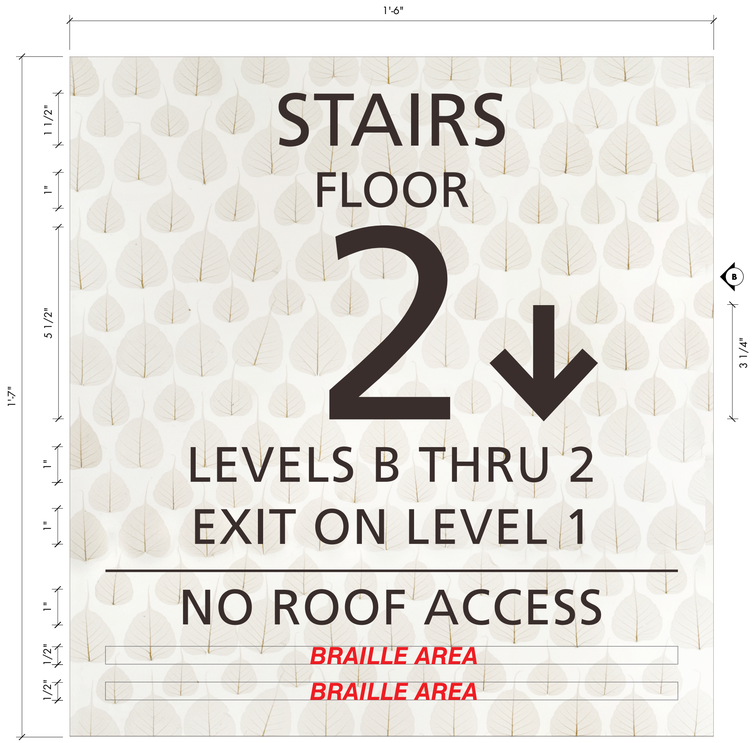

2 **TYPE A21 - Elevation**
scale 6" = 1' - 0"

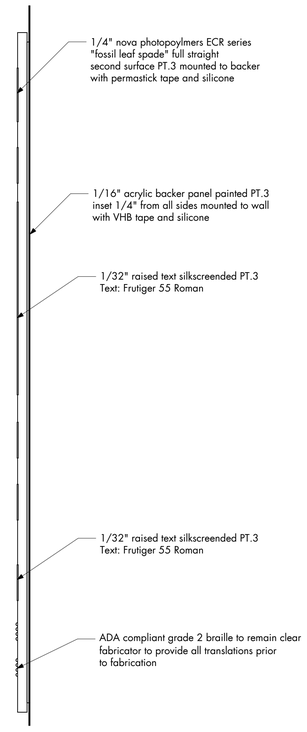

B **TYPE A21 - Side Elevation**
scale 6" = 1' - 0"

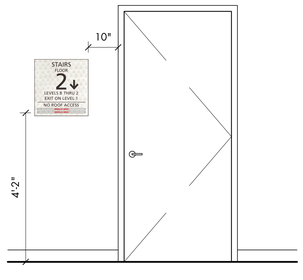

4 **TYPE A21 Typ. Mounting Height**
scale 1/2" = 1' - 0"

PROJECT KEY PLAN

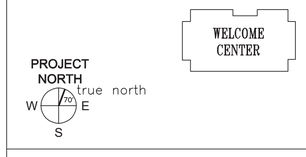

AECOM
1 FEDERAL STREET, 8TH FLOOR
BOSTON, MA 02110
617.723.1700
www.aecom.com

STATE OF MAINE
DEPARTMENT OF TRANSPORTATION

DATE

FED PIN NO: NA
WIN NO: 017163.02 & 017163.03

SIGNATURE
–
ARCH. LIN. NUMBER
–
DATE JANUARY 17, 2022

PROJECT INFORMATION

PROGRAM	–
PROJECT MANAGER	–
DESIGNER	AECOM
CONSULTANT	–
PROJECT RESIDENT	–
CONTRACTOR	–
PROJECT COMPLETION DATE	–

MAINE DEPARTMENT OF TRANSPORTATION
ACADIA GATEWAY FACILITY
INTERMODAL AND WELCOME CENTER

INTERIOR SIGNAGE DETAIL III - ROOM ID

SHEET NUMBER
SG121

C:\Users\stacy.zung\OneDrive - AECOM Directory\Acadia\06 Construction Docs_Titleblock\Titleblock 24X36.dwg Jan 13, 2022 - 8:05am

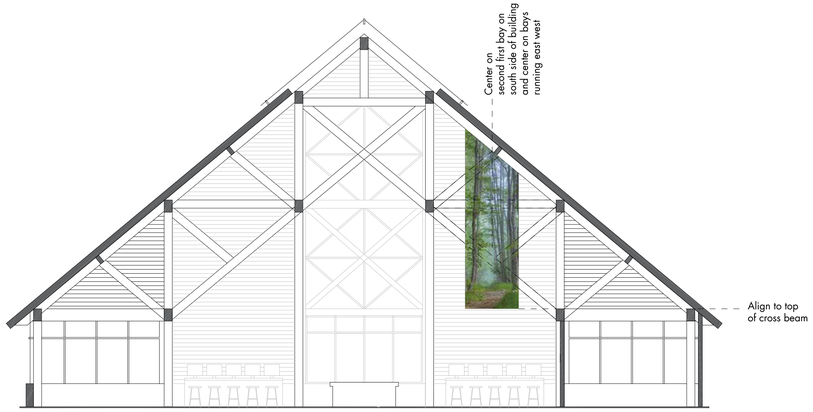

1 **TYPE E1 - Context Elevation**
scale 1/8" = 1' - 0"

Qty 5:
Opaque dye sublimation fabric banner, with finished edges and weight sewn into bottom pocket, fastenes to structure above panalized cieling.

2 **TYPE E1 - Concept Imagery**
scale 3/16" = 1' - 0"

Note:
Final images to be provided by NPS as high resolution digital files, minimum 72 dpi at 100% scale.

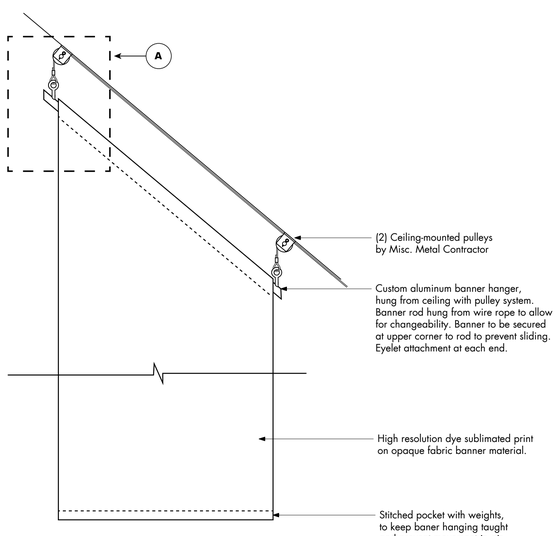

3 **TYPE E1 - Detail**
Not to scale

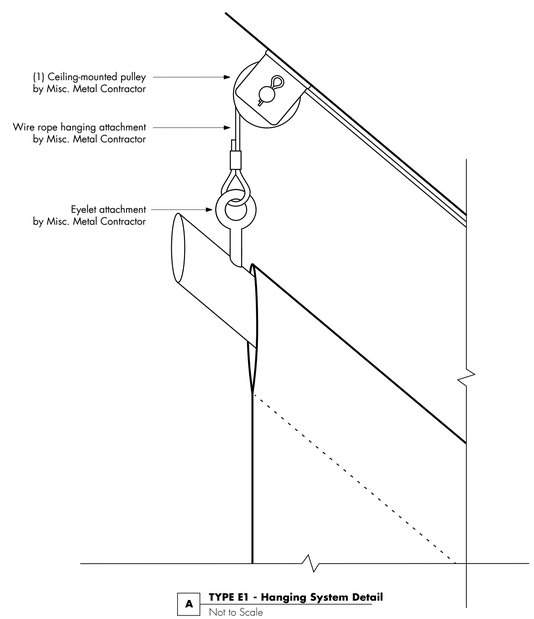

A **TYPE E1 - Hanging System Detail**
Not to Scale

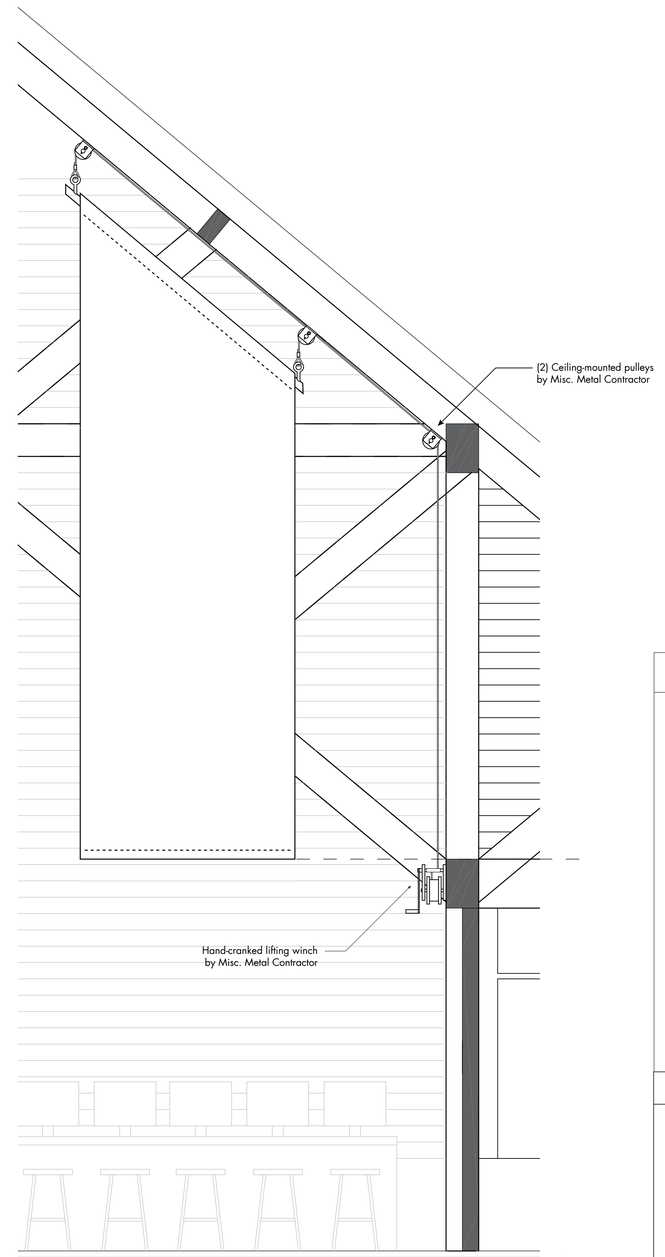

4 **TYPE E1 - Hanging System**
Not to scale

GENERAL NOTES

1. ALL HANGING SYSTEM COMPONENTS TO BE SIZED BY A MAINE-LICENSED ENGINEER.

PROJECT KEY PLAN

AECOM
1 FEDERAL STREET, 8TH FLOOR
BOSTON, MA 02110
617.723.1700
www.aecom.com

STATE OF MAINE
DEPARTMENT OF TRANSPORTATION

DATE

FED PIN NO: NA

WIN NO: 017163.02 & 017163.03

PROJECT INFORMATION		SIGNATURE
PROGRAM	–	–
PROJECT MANAGER	–	–
DESIGNER	AECOM	ARCH. LIN. NUMBER
CONSULTANT	–	–
PROJECT RESIDENT	–	–
CONTRACTOR	–	DATE JANUARY 17, 2022
PROJECT COMPLETION DATE	–	–

MAINE DEPARTMENT OF TRANSPORTATION
ACADIA GATEWAY FACILITY
INTERMODAL AND WELCOME CENTER

INTERIOR SIGNAGE DETAIL IV - ACOUSTIV BANNERS

SHEET NUMBER
SG122

C:\Users\stacy.zung\OneDrive - AECOM Directory\Acadia\06 Construction Docs_Titleblock\Titleblock 24X36.dwg Jan 13, 2022 - 9:05am