MDOT PIN 007630.00

METRIC	1. All dimensions are in millimeters unless otherwise noted. 2. All elevations and stations are in meters.	F.H.W.A. REG. NO.	STATE	PROJECT NUMBER	SHEET NO.	TOTAL SHEETS
		1	MAINE	BR-7630(00)X	1	21

STATE OF MAINE
DEPARTMENT OF TRANSPORTATION

HIGHLAND AVENUE BRIDGE
OVER
MEDUXNEKEAG RIVER
IN THE TOWN OF
HOULTON
AROOSTOOK COUNTY

PROJECT NO. BR-7630(00)X

PROJECT LENGTH 0.115 KILOMETERS

SUPERSTRUCTURE REPLACEMENT

BRIDGE NO. 3874

INDEX OF SHEETS

DESCRIPTION	SHEET NO.
TITLE SHEET	1
ESTIMATED QUANTITES	2
GENERAL PLAN	3
PROFILE	4
CROSS SECTIONS	5-9
ABUTMENT REMOVAL	10
ABUTMENT NO. 1 MODIFICATIONS	11
ABUTMENT NO. 2 MODIFICATIONS	12
PIER MODIFICATIONS	13
RETAINING WALL DETAILS	14
STRUCTURAL STEEL DETAILS	15-16
SUPERSTRUCTURE DETAILS	17-18
BEARING DETAILS	19
REINFORCING STEEL SCHEDULE	20
RIGHT-OF-WAY MAP	21 A-B

SPECIFICATIONS

SUPERSTRUCTURE DESIGN: AASHTO LRFD BRIDGE DESIGN SPECIFICATIONS, SI UNITS, SECOND EDITION, 1998 W/ 1999 INTERIMS.

SUBSTRUCTURE DESIGN: AASHTO STANDARD SPECIFICATIONS FOR HIGHWAY BRIDGES, SIXTEENTH EDITION, 1996 W/ INTERIMS (SERVICE LOAD DESIGN METHOD)

CONTRACT: STATE OF MAINE, DEPARTMENT OF TRANSPORTATION, STANDARD SPECIFICATIONS, HIGHWAYS AND BRIDGES, REVISION OF APRIL 1995, AND ALL SUPPLEMENTALS THERETO.

STANDARD DETAILS: STATE OF MAINE, DEPARTMENT OF TRANSPORTATION, STANDARD DETAILS, HIGHWAYS AND BRIDGES, APRIL 1997, AND ALL SUPPLEMENTALS THERETO.

DESIGN LOADING

LIVE LOAD.....HL-93 (MODIFIED FOR STRENGTH I)
STRESS CYCLES.....4×10^6 (n=1.5)

MATERIALS

CONCRETE:
BARRIERS, CURBS, SIDEWALKS, END POSTS.....CLASS LP
ALL OTHER.....CLASS A

REINFORCING STEEL.....ASTM A615/A615M, GRADE 420
STRUCTURAL STEEL:
ALL MATERIAL (UNLESS OTHERWISE NOTED).....ASTM A709/A709M, GRADE 345W (UNPAINTED)

HIGH STRENGTH BOLTS.....ASTM A 325M, TYPE 3

BASIC DESIGN STRESSES

CONCRETE.....f'c = 30 MPa
REINFORCING STEEL.....fy = 420 MPa
STRUCTURAL STEEL:
ASTM A709/A709M, GRADE 345W.....Fy = 345 MPa
ASTM A709/A709M, GRADE 250.....Fy = 250 MPa
ASTM A325M.....Fu = 830 MPa

HYDROLOGIC DATA *

DRAINAGE AREA.....= 598 km^2
DESIGN DISCHARGE (Q50).....= 276 m^3/s
CHECK DISCHARGE (Q100).....= 307 m^3/s
HEADWATER ELEV (Q50).....= 99.58 m
HEADWATER ELEV (Q100).....= 99.88 m
DISCHARGE VELOCITY (Q100).....= 1.55 m/s

* (FROM FLOOD INSURANCE STUDY, TOWN OF HOULTON, MAINE, AUGUST 1991, PUBLISHED BY THE FEDERAL EMERGENCY MANAGEMENT AGENCY)

TRAFFIC DATA

AADT 1998.....= 3750
AADT 2018.....= 4500
DHV.....= 450
TRUCKS (% AADT).....= 4
TRUCKS (% DHV).....= 2
DESIGN SPEED.....= 40 km/h
80 kN.....= 48

UTILITIES

EASTERN MAINE ELECTRIC COOP
BELL ATLANTIC
HOULTON CATV
HOULTON WATER CO.
MAINE PUBLIC SERVICE CO.

MAINTENANCE OF TRAFFIC

BRIDGE CLOSED DURING CONSTRUCTION. LOCAL TRAFFIC DETOURED.

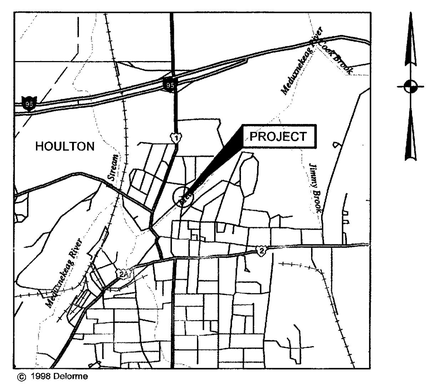

© 1998 Delorme

LOCATION MAP

0.5 0 1
SCALE IN KILOMETERS

NOTES:

PLANS OF THE EXISTING BRIDGE ARE AVAILABLE FOR THE CONTRACTOR'S REFERENCE AT THE BRIDGE DESIGN OFFICE IN AUGUSTA. THE PLANS ARE REPRODUCTIONS OF THE ORIGINAL DRAWINGS AS PREPARED FOR CONSTRUCTION OF THE BRIDGE. IT IS VERY UNLIKELY THAT THE PLANS WILL SHOW ANY CONSTRUCTION FIELD CHANGES OR ANY ALTERATIONS WHICH MAY HAVE BEEN MADE TO THE BRIDGE DURING ITS LIFE SPAN.

ALL WORK CONTEMPLATED UNDER THIS CONTRACT SHALL BE GOVERNED BY AND IN CONFORMITY WITH THE STANDARD SPECIFICATIONS (REVISION OF APRIL 1995) AND SUPPLEMENTALS THERETO, TOGETHER WITH THE STANDARD DETAILS HIGHWAY AND BRIDGES (REVISIONS OF APRIL 1997) AND THE SUPPLEMENTALS THERETO, AS MODIFIED BY THE PLANS AND SPECIFICATIONS SPECIAL PROVISIONS.

STATE OF MAINE CHRISTOPHER D. BAKER No. 7439 REGISTERED PROFESSIONAL ENGINEER

Christopher D. Baker — Jan. 15, 2001
BRIDGE ENGINEER (SHEETS 1, 2, 10 - 20) — DATE

STATE OF MAINE MUTSUKO H. GALLO 7771 REGISTERED PROFESSIONAL ENGINEER

Mutsuko H. Gallo — Jan. 15, 2001
HIGHWAY ENGINEER (SHEETS 3 - 9) — DATE

STATE OF MAINE
DEPARTMENT OF TRANSPORTATION

APPROVED:

R. S. Melanson — 03/08/01
COMMISSIONER — DATE

John E. Doughty — 03/07/01
CHIEF ENGINEER — DATE

UNITED STATES
DEPARTMENT OF TRANSPORTATION
FEDERAL HIGHWAY ADMINISTRATION
REGION 1

APPROVED:

DIVISION ADMINISTRATOR — DATE

PROJECT DESIGN ENGINEER	BY	DATE
DESIGN-DETAILED	S HODGDON	1/12/01
CHECKED	C ALLEY	1/12/01
REVISIONS	S JOHNSON	1/12/01
FIELD CHANGES		

PLANS

51075COV.DGN

METRIC 1. All dimensions are in millimeters unless otherwise noted. 2. All elevations and stations are in meters.

F.H.W.A. REG. NO.	STATE	PROJECT NUMBER	SHEET NO.	TOTAL SHEETS
1	MAINE	BR-7630X00(X	2	21

ESTIMATED QUANTITIES

ITEM NO.	DESCRIPTION		QUANTITY	UNIT
202.10	Removing Existing Superstructure - Property of Contractor		1	LS
202.17	Removing Existing Structural Concrete	(21 m³)	1	LS
203.20	Common Excavation		360	m³
203.21	Rock Excavation		13	m³
203.26	Gravel Borrow		65	m³
206.082	Structural Earth Excavation - Major Structures		150	m³
304.09	Aggregate Base Course - Crushed		1	m³
304.10	Aggregate Subbase Course - Gravel		370	m³
403.209	Hot Mix Asphalt (Drives)		1.5	Mg
403.210	Hot Mix Asphalt		313	Mg
502.21	Structural Concrete, Abutments and Retaining Walls		57	m³
502.23	Structural Concrete Piers		51	m³
502.26	Structural Concrete Roadway and Sidewalk Slab on Steel Bridges	(297 m³)	1	LS
502.4711	Silica Fume Additive	(2550 kg)	1	LS
502.49	Structural Concrete Curbs and Sidewalks	(100 m³)	1	LS
502.62	Substructure Repair		5	m²
503.12	Reinforcing Steel, Fabricated and Delivered		61 150	kg
503.13	Reinforcing Steel, Placing		61 150	kg
504.702	Structural Steel, Fabricated and Delivered, Welded	(158 200 kg)	1	LS
504.71	Structural Steel Erection	(158 200 kg)	1	LS
505.08	Shear Connectors	(3272 EA)	1	LS
507.0811	Steel Bridge Railing, 2 - Bar	(103.5 m)	1	LS
507.0831	Steel Bridge Railing, 4 - Bar	(103.5 m)	1	LS
508.13	Membrane Waterproofing	(930 m²)	1	LS
512.081	French Drain	(10 m)	1	LS
514.06	Curing Box for Concrete Cylinders		1	EACH
515.21	Protective Coating for Concrete Surfaces	(520 m²)	1	LS
520.21	Expansion Device - Gland Seal		1	EACH
520.22	Expansion Device - Compression Seal		1	EACH
523.08	Elastomeric Bridge Bearing - Laminated		16	EACH
526.301	Temporary Concrete Barrier Type I	(24 m)	1	LS
526.34	Permanent Concrete Transition Barrier		4	EACH
603.175	450 mm RCP Class III		2	m
604.161	Altering Catch Basin		2	EACH
604.252	Catch Basin Type A5-C		1	EACH
606.17	Guardrail Type 3b - Single Rail		27	m
606.1721	Bridge Transition - Type I		4	EACH
606.35	Guardrail Delineator Post		6	EACH
606.363	Guardrail, Remove and Dipsose		71	m
606.76	Modified Eccentric Loader Terminal		4	EACH
608.08	Reinforced Concrete Sidewalk		100	m²
609.19	Vertical Curb - Type 2		73	m
610.08	Plain Riprap		165	m³
615.07	Loam		5	m³
618.1401	Seeding Method Number 2 - Plan Quantity		2	UNIT
618.1411	Seeding Method Number 3 - Plan Quantity		2	UNIT
618.15	Temporary Seeding		1	kg
619.1201	Mulch - Plan Quantity		2	UNIT
620.58	Erosion Control Geotextile		6	m²
626.21	Metallic Conduit		18	m
626.22	Non-Metallic Conduit		18	m
627.618	300 mm Solid White Pavement Marking Line		7	m
627.73	100 mm Solid Yellow Pavement Marking Line		350	m
629.05	Hand Labor, Straight Time		25	MH
631.12	All Purpose Excavator (Including Operator)		25	HOUR
631.14	Grader (Including Operator)		25	HOUR
631.15	Roller, Earth and Base Course (Including Operator)		25	HOUR
631.172	Truck-Large (Including Operator)		25	HOUR
631.36	Foreman		25	HOUR
634.160	Highway Lighting		1	LS
634.210	Conventional Light Standard		3	EACH
637.071	Dust Control		1	LS
638.01	Embedded Work in Structures		1	LS
639.18	Field Office Type A		1	EACH
652.39	Work Zone Traffic Control		1	LS
656.75	Temporary Soil Erosion and Water Pollution Control		1	LS
659.10	Mobilization		1	LS
660.21	On-The-Job Training		1000	MH

PROJECT DESIGN ENGINEER		BY	DATE
PLANS	DESIGN-DETAILED	S HODGDON	1/12/01
	CHECKED	C OLLEY	1/12/01
	REVISIONS	S JOHNSON	2/22/01
	FIELD CHANGES	S JOHNSON	

GENERAL CONSTRUCTION NOTES

1. ALL UTILITY FACILITIES SHALL BE ADJUSTED BY THE RESPECTIVE UTILITIES UNLESS NOTED.
2. FOR EASEMENTS, CONSTRUCTION LIMITS AND RIGHT-OF-WAY LINES REFER TO RIGHT OF WAY MAP.
3. DURING CONSTRUCTION THE ROAD WILL BE CLOSED TO TRAFFIC FOR A PERIOD SPECIFIED IN 'SPECIAL PROVISIONS SECTION 652. THE CONTRACTOR SHALL DETERMINE THE TEMPORARY DETOUR ROUTES AND INCLUDE THEM IN THE TRAFFIC CONTROL PLAN. THIS SHALL BE SUBMITTED TO AND APPROVED BY THE RESIDENT ENGINEER.
4. NOTE NOT USED.
5. THE CLEARING LIMITS AS SHOWN ON THE PLANS ARE APPROXIMATE. THE EXACT LIMITS SHALL BE ESTABLISHED IN THE FIELD BY THE ENGINEER. PAYMENT FOR CLEARING SHALL BE INCIDENTAL TO CONTRACT ITEMS.
6. PLACE LOAM, 50 mm DEEP, ON ALL SLOPES EXCEPT SLOPES PROTECTED WITH STONE FILL.
7. DO NOT EXCAVATE FOR AGGREGATE SUBBASE COURSE WHERE EXISTING MATERIAL IS SUITABLE AS DETERMINED BY THE ENGINEER.
8. IN AREAS WHERE THE ENGINEER DIRECTS THE CONTRACTOR NOT TO EXCAVATE TO THE SUBGRADE LINE SHOWN ON THE PLANS, PAYMENT FOR REMOVING EXISTING PAVEMENT, GRUBBING, SHAPING, DITCHING, AND COMPACTING THE EXISTING SUBBASE AND LAYERS OF NEW SUBBASE 150 mm OR LESS THICK WILL BE MADE UNDER APPROPRIATE EQUIPMENT RENTAL ITEMS.
9. STONES WHICH CANNOT BE ROLLED OR COMPACTED INTO THE SURFACE OF THE SHOULDER SHALL BE REMOVED BY HAND RAKING. PAYMENT FOR HAND RAKING SHALL BE INCIDENTAL TO ITEM 304.10, AGGREGATE SUBBASE COURSE - GRAVEL.
10. TWO GUARDRAIL DELINEATOR POSTS SHALL BE INSTALLED AT EACH LEADING GUARDRAIL END AND ONE AT EACH TRAILING GUARDRAIL END.
11. MODIFIED ECCENTRIC LOADER TERMINALS SHALL BE INSTALLED CONCURRENTLY WITH THE PLACEMENT OF EACH SECTION OF BEAM GUARDRAIL.
12. EXTENDED-USE EROSION CONTROL BLANKET, SEEDED GUTTERS, RIPRAP DOWNSPOUTS, AND OTHER GUTTERS LINED WITH STONE DITCH PROTECTION SHALL BE CONSTRUCTED AFTER PAVING AND SHOULDER WORK IN COMPLETED, WHERE IT IS APPARENT THAT RUNOFF WILL CAUSE CONTINUAL EROSION. PAYMENT WILL BE MADE UNDER APPROPRIATE CONTRACT ITEMS.
13. GUARDRAIL POST LENGTH AND EMBEDMENT AS SHOWN IN THE STANDARD DETAILS SHALL BE MODIFIED FROM THE INDICATED 1830 mm LENGTH TO 2130 mm WITH A 1400 mm EMBEDMENT.
14. PROTECTIVE COATING FOR CONCRETE SURFACES SHALL BE APPLIED TO THE FOLLOWING AREAS:
    ALL EXPOSED SURFACES OF CONCRETE CURBS AND SIDEWALKS,
    FASCIA DOWN TO DRIP NOTCH,
    ALL EXPOSED SURFACES OF CONCRETE TRANSITION BARRIERS,
    TOP OF ABUTMENT BACKWALLS AND TO 300 mm BELOW THE TOP OF BACKWALLS ON THE BACK SIDE.
15. ALL NEW GRATES FOR CATCH BASINS SHALL BE 'CASCADING TYPE'.
16. REMOVAL OF EXISTING STRUCTURAL CONCRETE BRIDGE DECK, INCLUDING THE BITUMINOUS WEARING SURFACE, BRIDGE RAIL AND ALL INCIDENTALS WILL BE PAID UNDER ITEM 202.10.
17. REMOVAL OF EXISTING STRUCTURAL CONCRETE IN THE ABUTMENTS, RETAINING WALLS, WINGS AND ALL INCIDENTALS WILL BE PAID FOR UNDER ITEM 202.17. ANY DAMAGE TO THE EXISTING ABUTMENTS AND WINGS REMAINING IN PLACE SHALL BE REPAIRED AT THE CONTRACTOR'S EXPENSE.
18. ALL JOINTS BETWEEN EXISTING AND PROPOSED HOT BITUMINOUS PAVEMENT SHALL BE BUTTED. PAYMENT FOR THIS WORK WILL BE CONSIDERED INCIDENTAL TO RELATED CONTRACT ITEMS.
19. RIPRAP SHALL BE COMPOSED OF ANGULAR STONE ONLY. ROUNDED FIELD STONES ARE NOT PERMITTED.
20. REPAIR OF EXISTING STRUCTURAL CONCRETE SHALL BE PAID UNDER ITEM 502.62.
21. DIMENSIONS, ANGLES, BEARINGS AND ELEVATIONS OF THE EXISTING BRIDGE SHOWN ON THESE PILANS HAVE BEEN OBTAINED FROM PLANS OF THE EXISTING STRUCTURE AND LIMITED FIELD INVESTIGATION AND MAY NOT ACCURATELY REFLECT ACTUAL FIELD CONDITIONS. THE CONTRACTOR WILL BE RESPONSIBLE FOR MAKING FIELD MEASUREMENTS OF ALL EXISTING STRUCTURE COMPONENTS IMPACTED BY THE NEW WORK TO ASSURE CONSISTENCY WITH THE PROPOSED MODIFICATIONS. ANY DISCREPANCIES IN DIMENSIONS, CHARACTER OR EXTENT OF THE EXISTING FEATURES SHALL BE BROUGHT TO THE ATTENTION OF THE ENGINEER BEFORE ADVANCING THE WORK.
22. THE COST OF REMOVING AND RESETTING LANDSCAPE BOULDERS SHALL BE INCIDENTAL TO ITEM 203.20.

DRILLED AND ANCHORED REINFORCING STEEL NOTES

1. THE ANCHORING MATERIAL SHALL BE ONE OF THE PRODUCTS LISTED ON THE MAINE DEPARTMENT OF TRANSPORTATION LIST OF PREQUALIFIED TYPE III ANCHORING MATERIALS. INSTALLATION SHALL BE IN ACCORDANCE WITH THE MANUFACTURER'S RECOMMENDATIONS.
2. NO SEPARATE PAYMENT WILL BE MADE FOR DRILLING AND ANCHORING REINFORCING STEEL IN THE EXISTING WINGS, PIER CAPS AND ABUTMENTS BUT WILL BE CONSIDERED INCIDENTAL TO RELATED CONTRACT ITEMS.

LIGHTING NOTES

1. THERE SHALL BE NO JUNCTION BOXES OR SPLICES BETWEEN LIGHT POLES. THE CONDUIT SHALL BE CONTINUOUS BETWEEN EACH LIGHT POLE.
2. ALL MATERIALS AND WORKMANSHIP SHALL CONFORM TO THE LATEST VERSION OF THE NEC, THE LOCAL ELECTRICAL UTILITY, AND ALL LOCAL ORDINANCES THAT MAY APPLY.
3. ALL NEW LUMINAIRES SHALL BE FULL IES CUTOFF TYPE WITH TEMPERED FLAT GLASS, AND SHALL USE 150 WATT HPS LAMPS (120/240 VOLTS).
4. ALL FIXTURES SHALL HAVE 2.4 m BRACKET ARMS ON ALUMINUM POLES AT A MOUNTING HEIGHT OF 10.6 METERS. POLES SHALL HAVE INTERNAL VIBRATION DAMPENERS.
5. ALL FIXTURES SHALL BE GASKETED AND SHALL INCLUDE A PROTECTED STARTER, A FUSE KIT IN FIXTURE, A TERMINAL BLOCK, AND A NEMA DECAL.
6. THE FIXTURE CHOSEN FOR BRIDGE LIGHTING LEVELS SHALL HAVE AN AVERAGE MAINTAINED HORIZONTAL ILLUMINATION OF 0.7 FOOTCANDLES WITH AN AVERAGE TO MINIMUM UNIFORMITY OF 4:1 OR BETTER.
7. THE WIRE SIZE SHALL BE #8 AWG WITH AN INSULATION OF XHHW OR EQUIVALENT STRANDED COPPER WITH AT LEAST ONE EXTRA SPARE CONDUCTOR TO EACH POLE. THE EXTRA CONDUCTOR SHALL BE CAPPED ON BOTH SIDES.
8. ALL CONDUIT EMBEDDED IN THE STRUCTURE SHALL BE 50 mm DIAMETER SCHEDULE 40 PVC. CONDUIT UNDER THE ROADWAY SLOPE SHALL BE A MINIMUM OF SCHEDULE 80. CONDUIT EMBEDDED IN THE STRUCTURE SHALL BE PAID UNDER ITEM 638.01, EMBEDDED WORK IN STRUCTURE. CONDUIT PLACED UNDER THE ROADWAY SLOPES SHALL BE PAID UNDER ITEM 626.22, NON-METALLIC CONDUIT.
9. CONDUIT THAT GOES THROUGH THE BRIDGE WINGWALL SHALL HAVE A JUNCTION BOX ATTACHED TO THE FACE OF IT IN ACCORDANCE WITH THE NEC. THE JUNCTION BOX SHALL BE NO HIGHER THAN 1.4 METERS ABOVE THE GROUND. ALL ABOVE GROUND JUNCTION BOXES SHALL BE OF STAINLESS STEEL OR ALUMINUM WITH A CONTINUOUS HINGE AND A NEMA TYPE 4X RATING.

VANASSE HANGEN BRUSTLIN, INC.

BRIDGE NO. 3874

STATE OF MAINE
DEPARTMENT OF TRANSPORTATION

HIGHLAND AVENUE BRIDGE
OVER
MEDUXNEKEAG RIVER
IN THE TOWN OF
HOULTON
AROOSTOOK COUNTY

ESTIMATED QUANTITIES

5007SQTY.DGN

PIN 7630.00

METRIC	1. All dimensions are in millimeters unless otherwise noted. 2. All elevations and stations are in meters.	F.H.W.A. REG. NO.	STATE	PROJECT NUMBER	SHEET NO.	TOTAL SHEETS
			MAINE	BR-7630(00)X	3	21

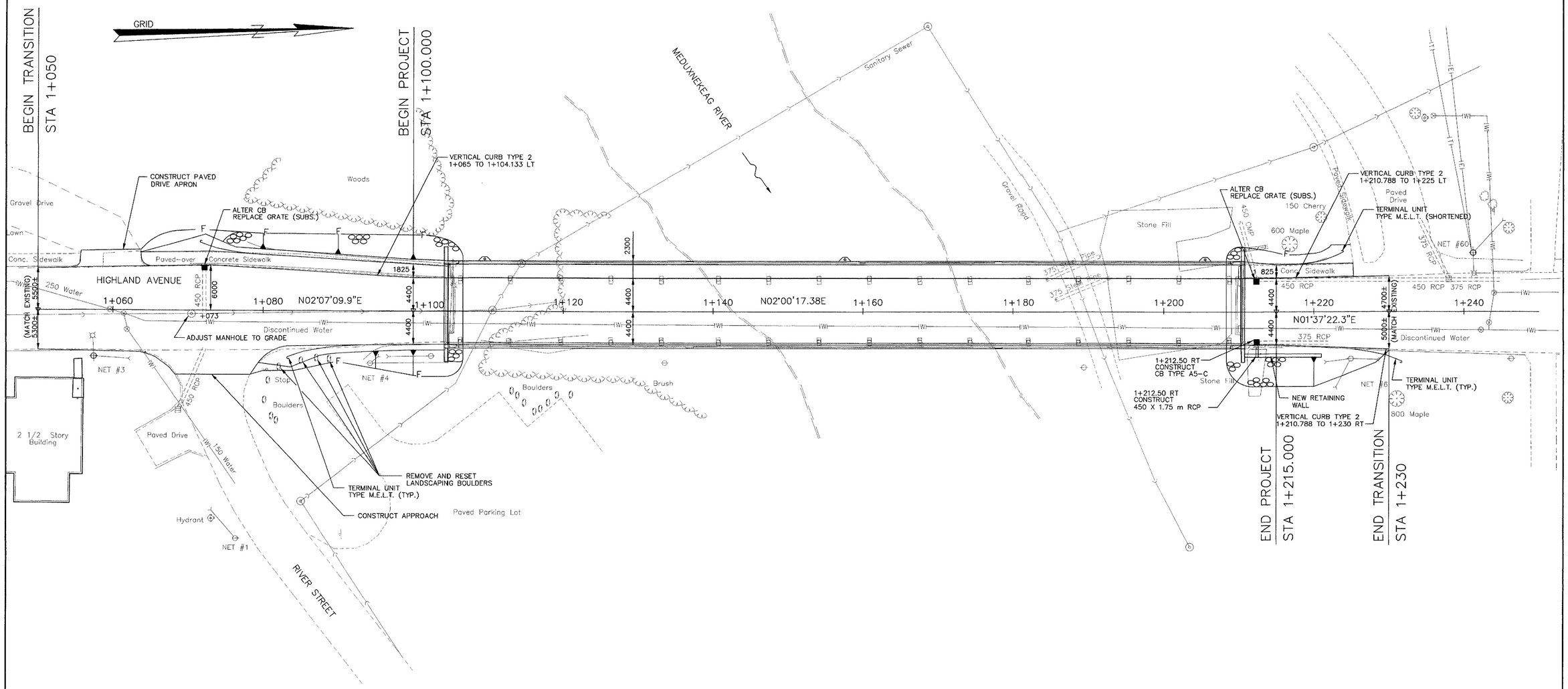

PROJECT DESIGN ENGINEER		DATE
DESIGN-DETAILED	CM	9/00
CHECKED	MG	10/00
REVISIONS		
FIELD CHANGES		

PLANS

5 0 5 10

Scale in Meters

HAYASHI CORPORATION

BRIDGE NO. 3874

STATE OF MAINE
DEPARTMENT OF TRANSPORTATION

HIGHLAND AVENUE BRIDGE
OVER
MEDUXNEKEAG RIVER
IN THE TOWN OF
HOULTON
AROOSTOOK COUNTY

GENERAL PLAN

SHEET 3 OF 21

DECEMBER, 2000

PIN 7630.00

METRIC	1. All dimensions are in millimeters unless otherwise noted. 2. All elevations and stations are in meters.	F.H.W.A. REG. NO.	STATE	PROJECT NUMBER	SHEET NO.	TOTAL SHEETS
			MAINE	BR-7630(00)X	4	21

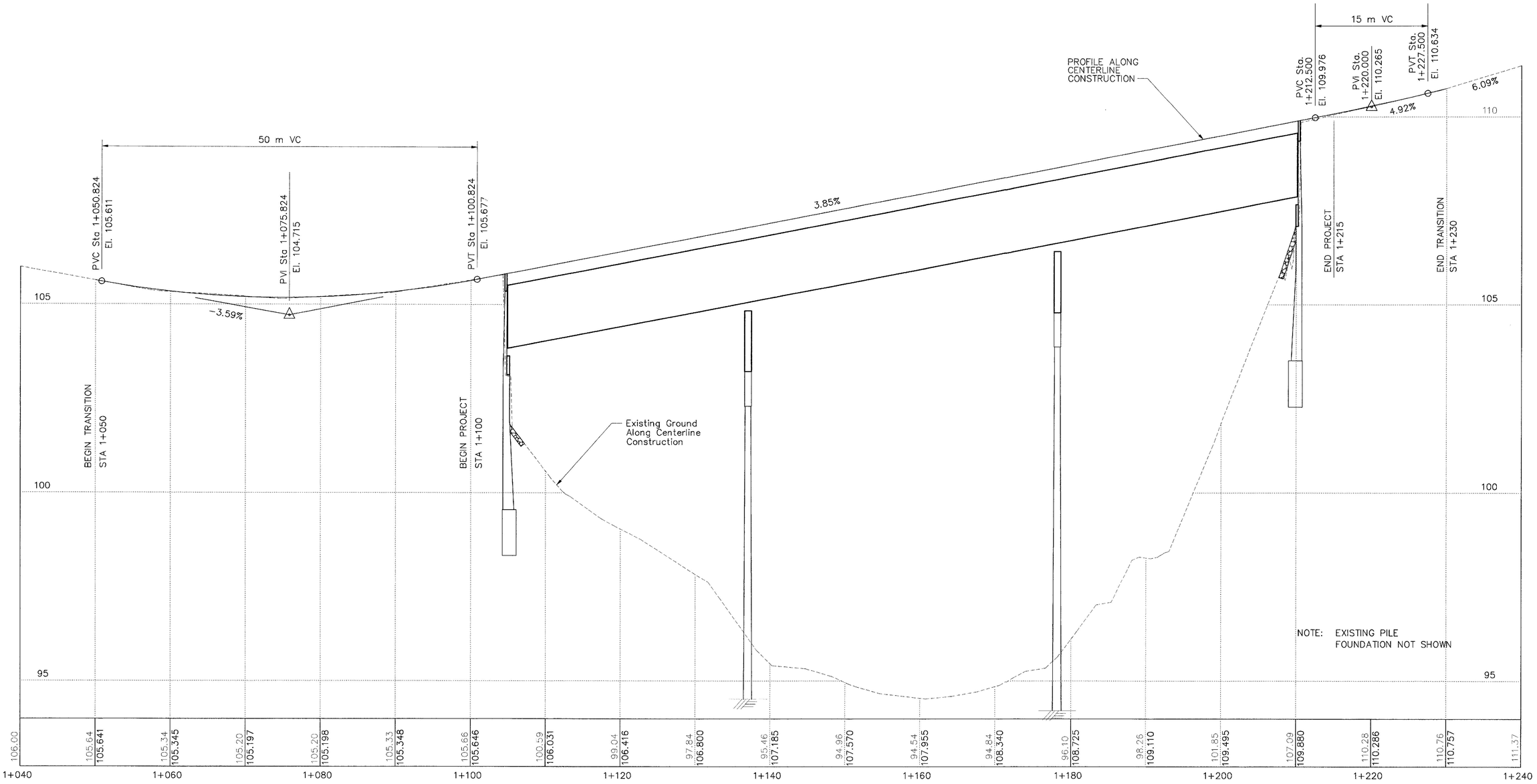

PROFILE ALONG CONSTRUCTION CENTERLINE

HORIZ. 5 0 5 10
VERT. 1 0 1 2
SCALE (in meters)

PROJECT DESIGN ENGINEER			DATE
PLANS	DESIGN-DETAILED	CEM	RJH	4/00
	CHECKED	MHG		11/00
	REVISIONS			
	FIELD CHANGES			

BRIDGE NO. 3874

STATE OF MAINE
DEPARTMENT OF TRANSPORTATION

HIGHLAND AVENUE BRIDGE
OVER
MEDUXNEKEAG RIVER
IN THE TOWN OF
HOULTON
AROOSTOOK COUNTY

PROFILE

HAYASHI CORPORATION

SHEET 4 OF 21

DECEMBER 2000

PIN 7630.00

METRIC	1. All dimensions are in millimeters unless otherwise noted. 2. All elevations and stations are in meters.	F.H.W.A. REG. NO.	STATE	PROJECT NUMBER	SHEET NO.	TOTAL SHEETS
			MAINE	BR-7630(00)X	5	21

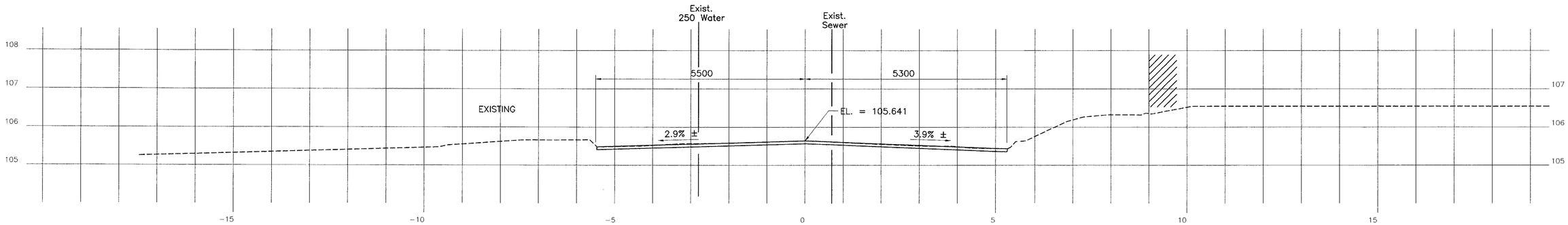

1+050
BEGIN TRANSITION

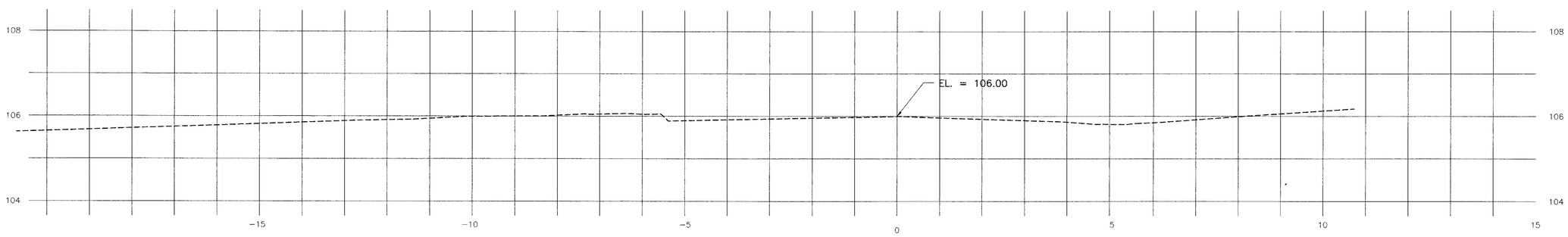

1+040

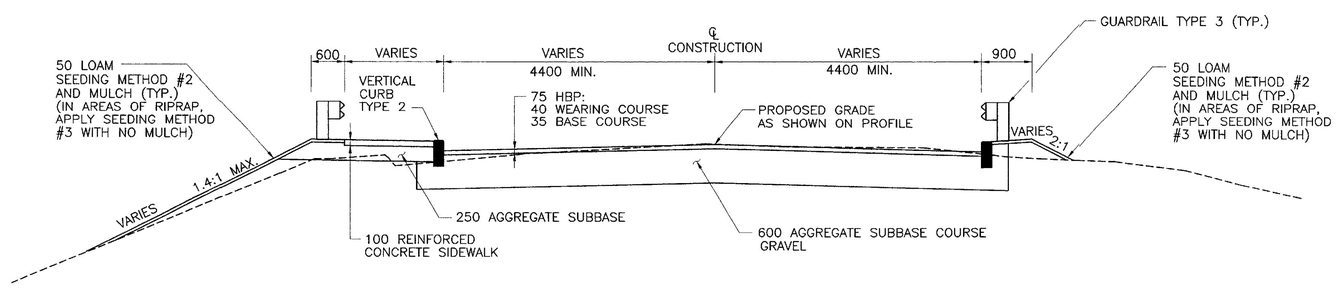

TYPICAL APPROACH SECTION

PROJECT DESIGN ENGINEER	BY	DATE
DESIGN-DETAILED	CJM	4/00
CHECKED	MHG	11/00
REVISIONS		
FIELD CHANGES		

PLANS

HAYASHI CORPORATION

BRIDGE NO. 3874

STATE OF MAINE
DEPARTMENT OF TRANSPORTATION

HIGHLAND AVENUE BRIDGE
OVER
MEDUXNEKEAG RIVER
IN THE TOWN OF
HOULTON
AROOSTOOK COUNTY
CROSS SECTIONS

SHEET 5 OF 21

DECEMBER, 2000

PIN 7630.00

METRIC	1. All dimensions are in millimeters unless otherwise noted. 2. All elevations and stations are in meters.	F.H.W.A. REG. NO.	STATE	PROJECT NUMBER	SHEET NO.	TOTAL SHEETS
			MAINE	BR-7630(00)X	6	21

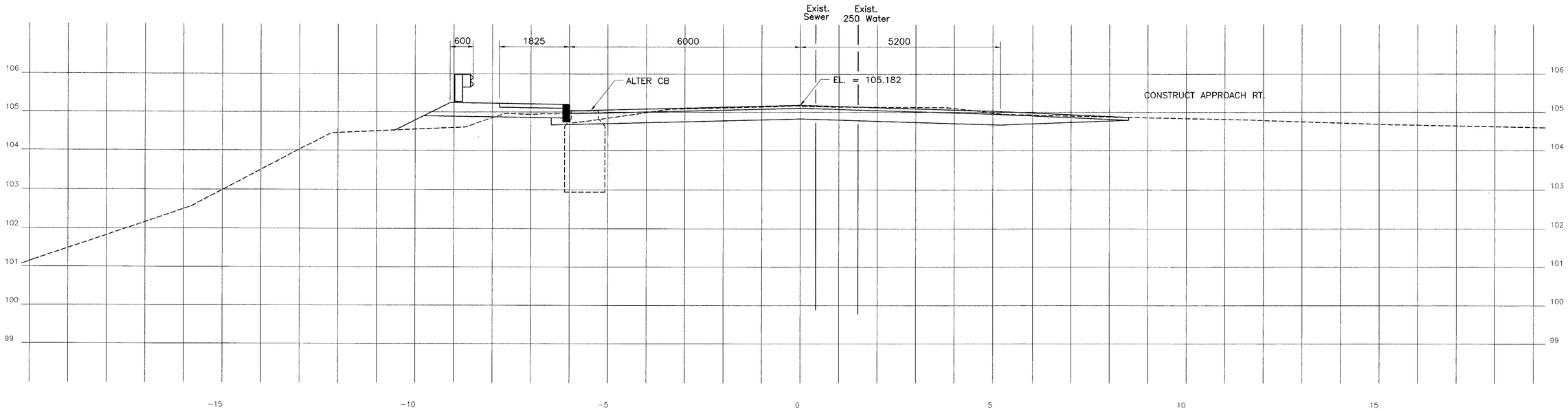

1+073

INSTALL GUARDRAIL TERMINAL UNIT TYPE M.E.L.T.
FROM STA. 1+068.114 ± TO STA. 1+079.544 LT.

INSTALL 19.05 m GUARDRAIL TYPE 3b
FROM STA. 1+079.544 TO STA. 1+098.594 LT.

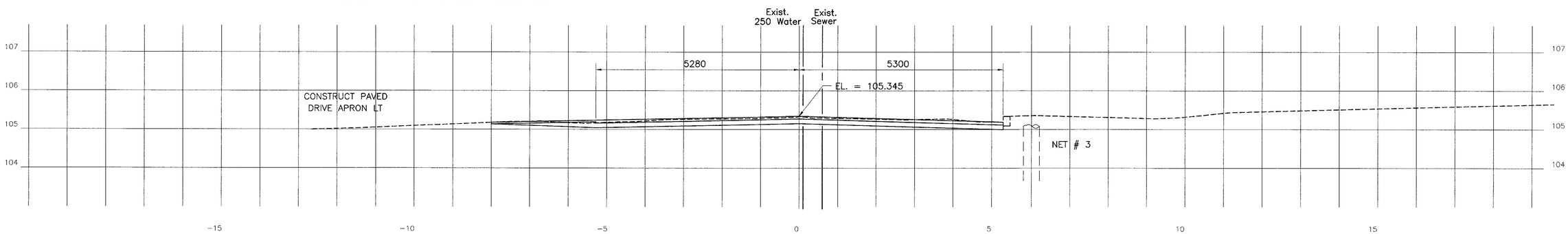

1+060

PROJECT DESIGN ENGINEER		BY	DATE
PLANS	DESIGN-DETAILED	CM	9/00
	CHECKED		
	REVISIONS	MG	10/00
	FIELD CHANGES		

BRIDGE NO. 3874

STATE OF MAINE
DEPARTMENT OF TRANSPORTATION

HIGHLAND AVENUE BRIDGE
OVER
MEDUXNEKEAG RIVER
IN THE TOWN OF
HOULTON
AROOSTOOK COUNTY

CROSS SECTIONS

HAYASHI CORPORATION

SHEET 6 OF 21

DECEMBER, 2000

PIN 7630.00

METRIC	1. All dimensions are in millimeters unless otherwise noted. 2. All elevations and stations are in meters.	F.H.W.A. REG. NO.	STATE	PROJECT NUMBER	SHEET NO.	TOTAL SHEETS
			MAINE	BR-7630(00)X	7	21

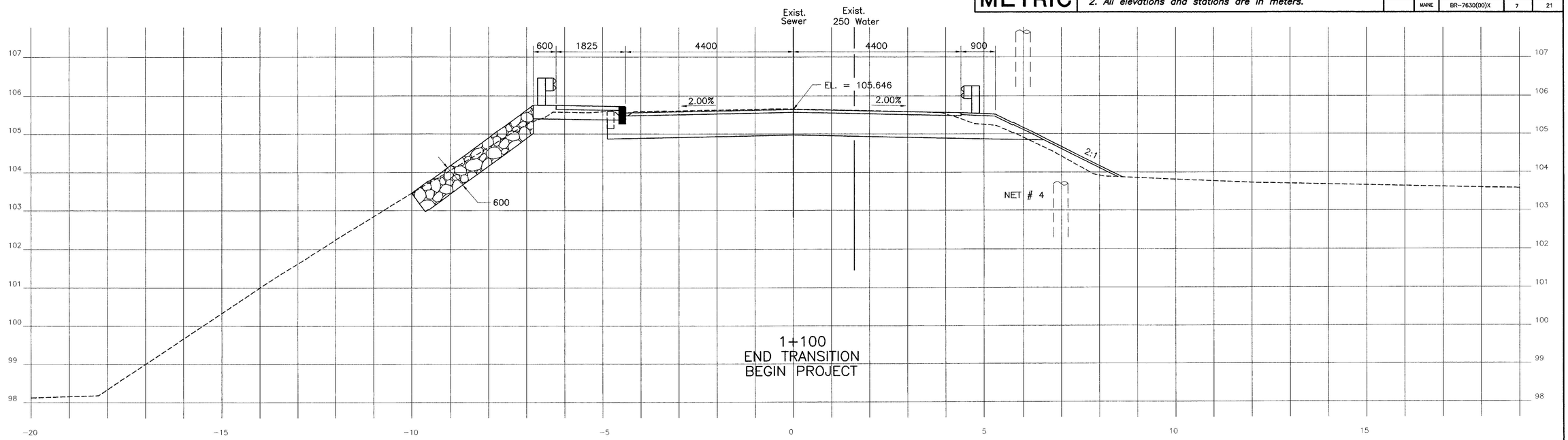

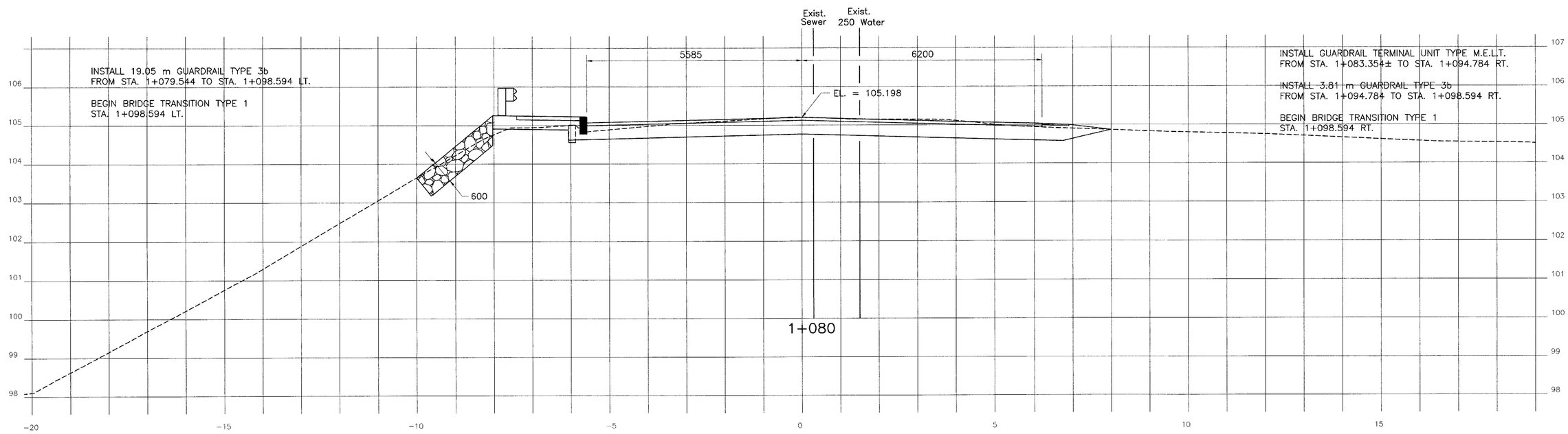

PROJECT DESIGN ENGINEER		BY	DATE
PLANS	DESIGN-DETAILED	CM	9/00
	CHECKED	MG	10/00
	REVISIONS		
	FIELD CHANGES		

BRIDGE NO. 3874

STATE OF MAINE
DEPARTMENT OF TRANSPORTATION

HIGHLAND AVENUE BRIDGE
OVER
MEDUXNEKEAG RIVER
IN THE TOWN OF
HOULTON
AROOSTOOK COUNTY

CROSS SECTIONS

HAYASHI CORPORATION

SHEET 7 OF 21

DECEMBER, 2000

PIN 7630.00

METRIC	1. All dimensions are in millimeters unless otherwise noted. 2. All elevations and stations are in meters.	F.H.W.A. REG. NO.	STATE	PROJECT NUMBER	SHEET NO.	TOTAL SHEETS
			MAINE	BR-7630(00)X	8	21

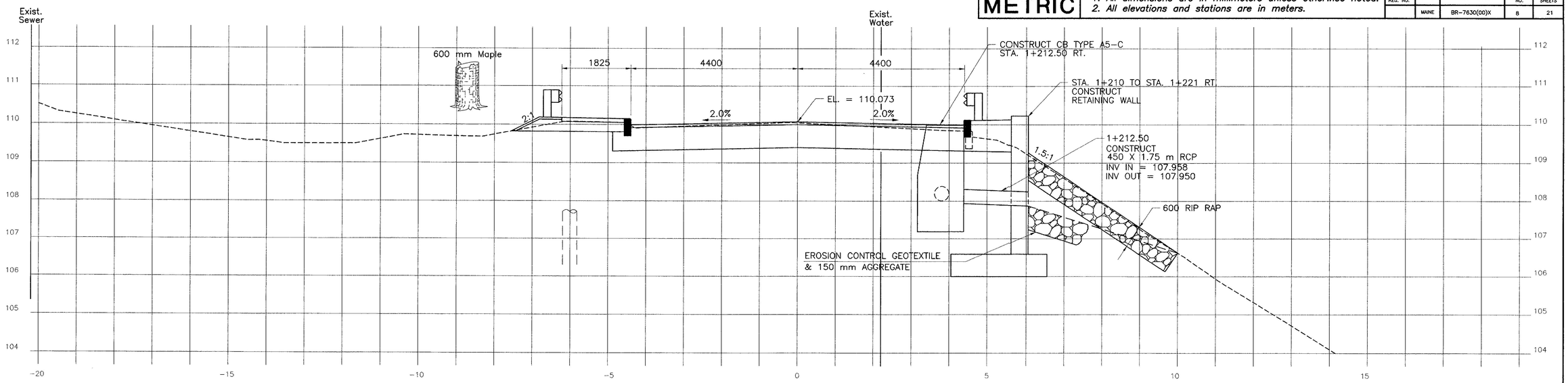

END BRIDGE TRANSITION TYPE 1
STA. 1+216.327 LT.

INSTALL GUARDRAIL TERMINAL UNIT TYPE M.E.L.T.
FROM STA. 1+216.327 TO STA. 1+223.947 ± LT.

1+215
END PROJECT
BEGIN TRANSITION

END BRIDGE TRANSITION RAIL
STA. 1+216.327 RT.

INSTALL 3.81 m GUARDRAIL TYPE 3b
FROM STA. 1+216.327 TO STA. 1+220.137 RT.

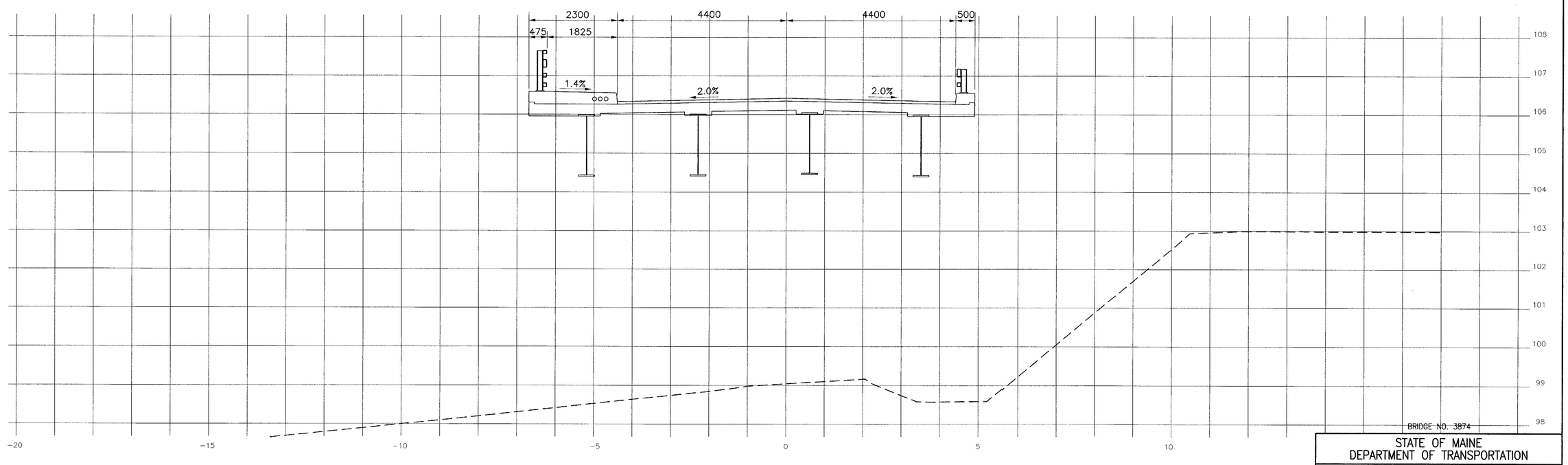

1+104.133 TO 1+210.788
BRIDGE

PROJECT DESIGN ENGINEER	BY	DATE
DESIGN-DETAILED	CM	9/00
CHECKED	MG	10/00
REVISIONS		
FIELD CHANGES		

PLANS

BRIDGE NO. 3874

STATE OF MAINE
DEPARTMENT OF TRANSPORTATION

HIGHLAND AVENUE BRIDGE
OVER
MEDUXNEKEAG RIVER
IN THE TOWN OF
HOULTON
AROOSTOOK COUNTY

CROSS SECTIONS

HAYASHI CORPORATION

SHEET 8 OF 21

DECEMBER, 2000

PIN 7630.00

METRIC	1. All dimensions are in millimeters unless otherwise noted. 2. All elevations and stations are in meters.	F.H.W.A. REG. NO.	STATE	PROJECT NUMBER	SHEET NO.	TOTAL SHEETS
			MAINE	BR-7630(00)X	9	21

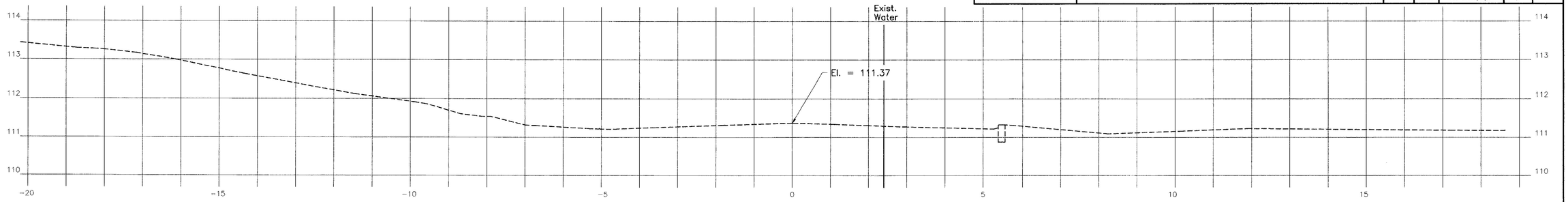

1+240

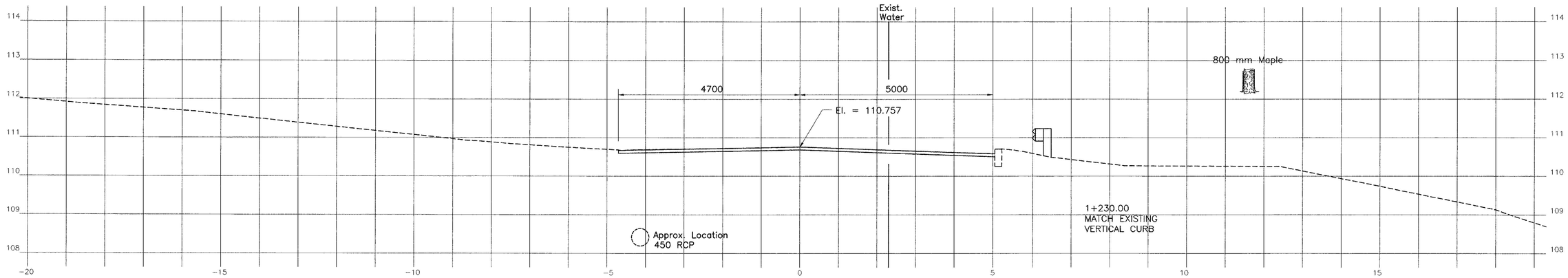

INSTALL GUARDRAIL TERMINAL UNIT TYPE M.E.L.T.
FROM STA. 1+216.327 TO STA. 1+223.947 ± LT.

1+230
END TRANSITION
MATCH EXISTING

INSTALL GUARDRAIL TERMINAL UNIT TYPE M.E.L.T.
FROM STA. 1+220.137 TO STA. 1+231.567 ± RT.

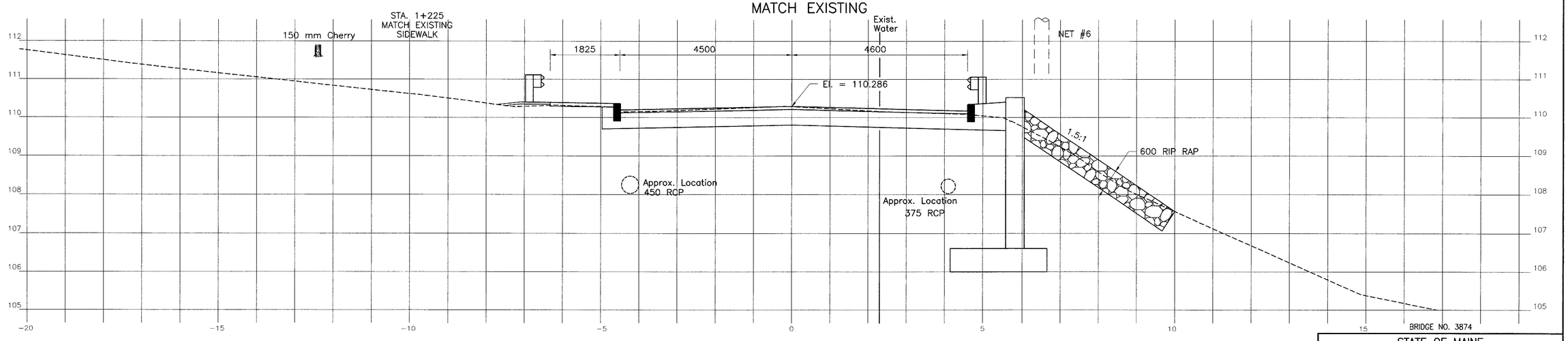

BRIDGE NO. 3874

1+220

PROJECT DESIGN ENGINEER	BY	DATE
DESIGN-DETAILED	CM	9/00
CHECKED	MG	10/00
REVISIONS		
FIELD CHANGES		

PLANS

STATE OF MAINE
DEPARTMENT OF TRANSPORTATION

HIGHLAND AVENUE BRIDGE
OVER
MEDUXNEKEAG RIVER
IN THE TOWN OF
HOULTON
AROOSTOOK COUNTY

CROSS SECTIONS

HAYASHI CORPORATION

SHEET 9 OF 21

DECEMBER, 2000

MDOT PIN 007630.00

METRIC	1. All dimensions are in millimeters unless otherwise noted. 2. All elevations and stations are in meters.	F.H.W.A. REG. NO.	STATE	PROJECT NUMBER	SHEET NO.	TOTAL SHEETS
		1	MAINE	BR-7630(003)X	10	21

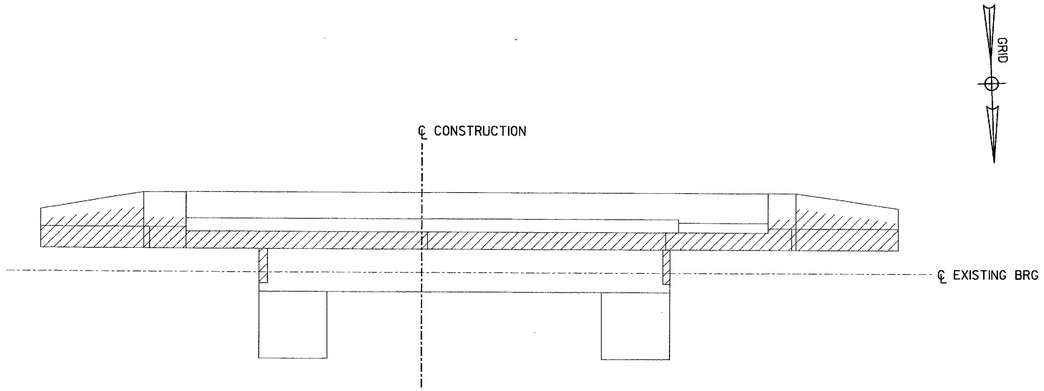

ABUTMENT 1 PLAN
(PILE CAP NOT SHOWN)

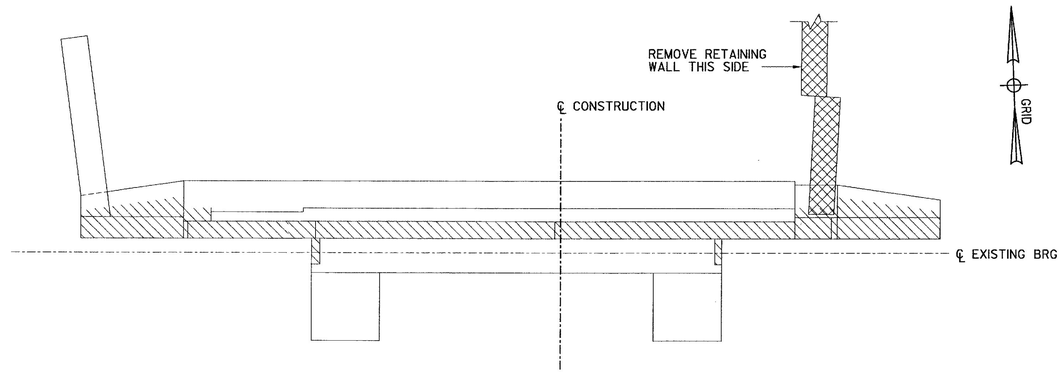

ABUTMENT 2 PLAN
(PILE CAP NOT SHOWN)

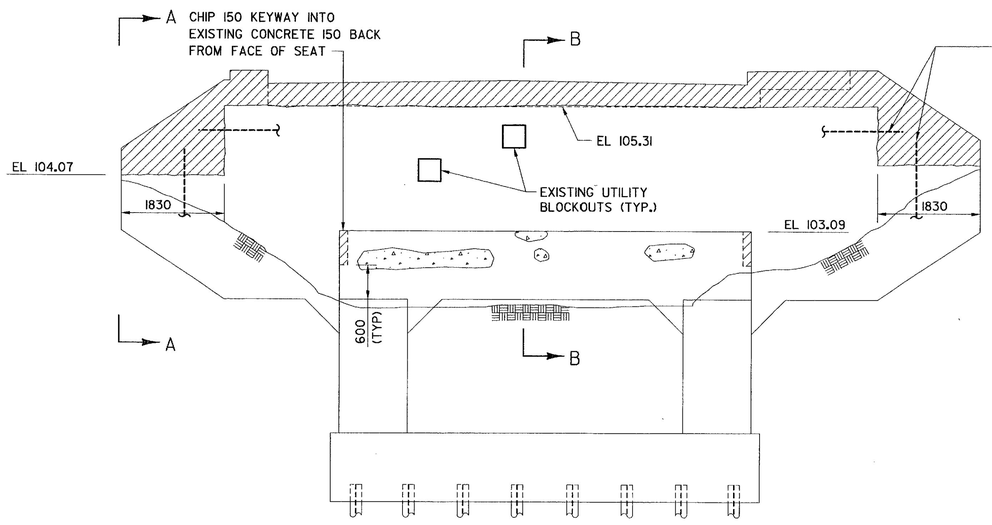

ABUTMENT 1 ELEVATION

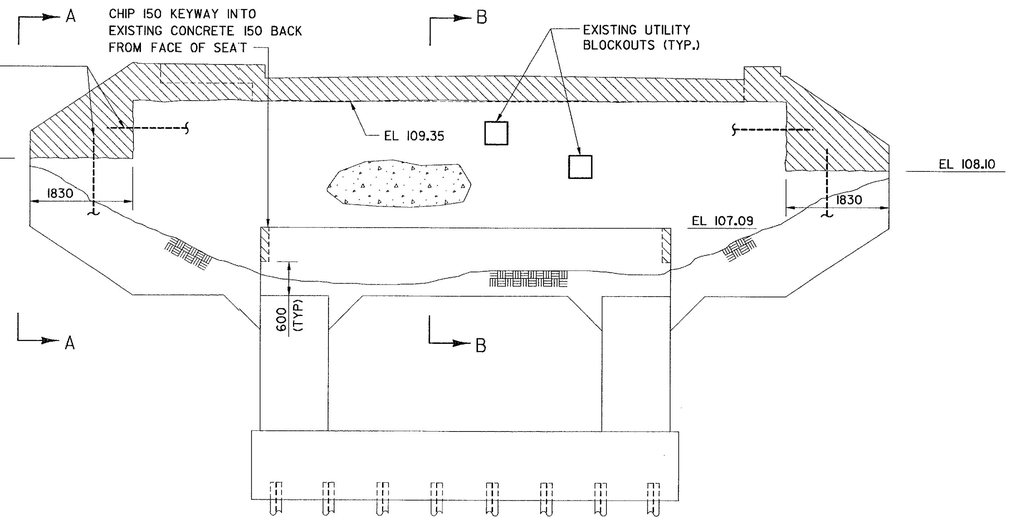

ABUTMENT 2 ELEVATION

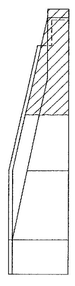

VIEW A-A

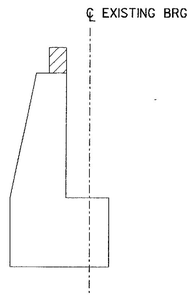

SECTION B-B

ABUTMENT REMOVAL NOTES

1. ABUTMENT BACKWALL AND WINGWALL CONCRETE SHALL BE CAREFULLY REMOVED SO AS NOT TO DAMAGE THE EXISTING REINFORCING STEEL TO BE RETAINED. ANY REINFORCING STEEL DAMAGED SHALL BE REPAIRED AT THE CONTRACTOR'S EXPENSE.
2. NO SEPARATE PAYMENT WILL BE MADE FOR CLEANING AND ALTERING THE EXISTIING REINFORCING STEEL FOR THE PROPER FIT.

= PARTIAL REMOVAL OF EXISTING STRUCTURE

= ENTIRE REMOVAL OF EXISTING STRUCTURE

= AREAS TO BE REPAIRED. SEE NOTE 20, SHEET 2

PROJECT DESIGN ENGINEER	BY	DATE
DESIGN-DETAILED	S HODGDON / C GILLEY	1/12/01
CHECKED	S JOHNSON	1/12/01
REVISIONS		
FIELD CHANGES		

PLANS

BRIDGE NO. 3874

STATE OF MAINE
DEPARTMENT OF TRANSPORTATION

HIGHLAND AVENUE BRIDGE
OVER
MEDUXNEKEAG RIVER
IN THE TOWN OF
HOULTON
AROOSTOOK COUNTY

ABUTMENT REMOVAL

VANASSE HANGEN BRUSTLIN, INC.

SHEET 10 OF 21 AUGUSTA, MAINE DECEMBER 2000

51075ML1.DGN

METRIC 1. All dimensions are in millimeters unless otherwise noted. 2. All elevations and stations are in meters.

F.H.W.A. REG. NO.	STATE	PROJECT NUMBER	SHEET NO.	TOTAL SHEETS
1	MAINE	BR-7630X01X	11	21

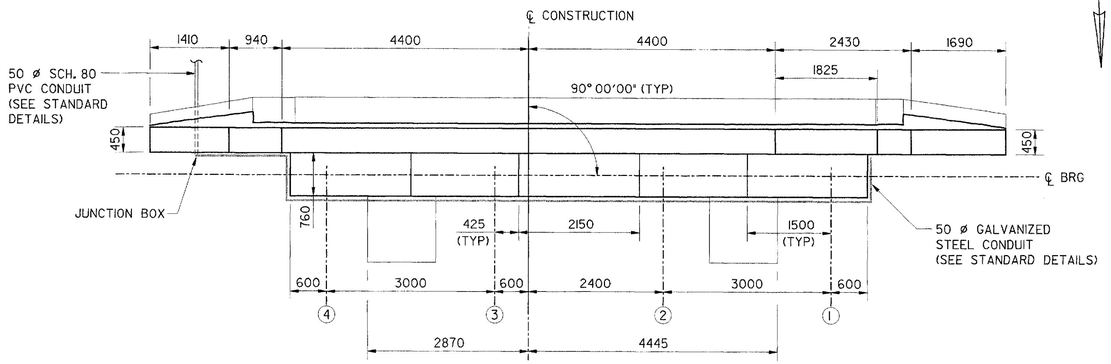

ABUTMENT 1 PLAN

(PILE CAP NOT SHOWN)

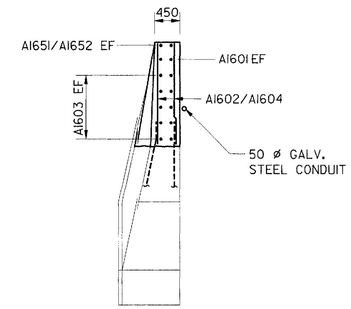

VIEW A-A

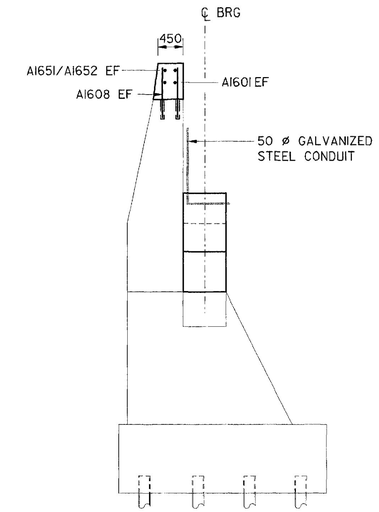

SECTION B-B

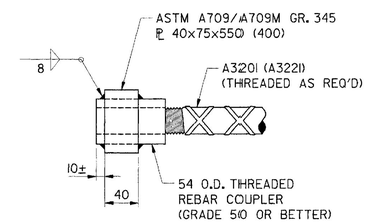

DETAIL D

ABUTMENT NO 2 VALUES IN ( )

NOTES:

1. ANCHOR BAR ASSEMBLY SHALL BE CAPABLE OF DEVELOPING 125% OF THE TENSILE CAPACITY OF THE REINFORCING STEEL.
2. ALTERNATIVE ANCHORAGE DETAILS MAY BE SUBMITTED TO THE ENGINEER FOR APPROVAL.
3. ALL COSTS FOR DESIGN, FABRICATION, AND PLACING ANCHORAGE ASSEMBLY SHALL BE INCIDENTAL TO ITEM 503.12, "REINFORCING STEEL, FABRICATED AND DELIVERED."

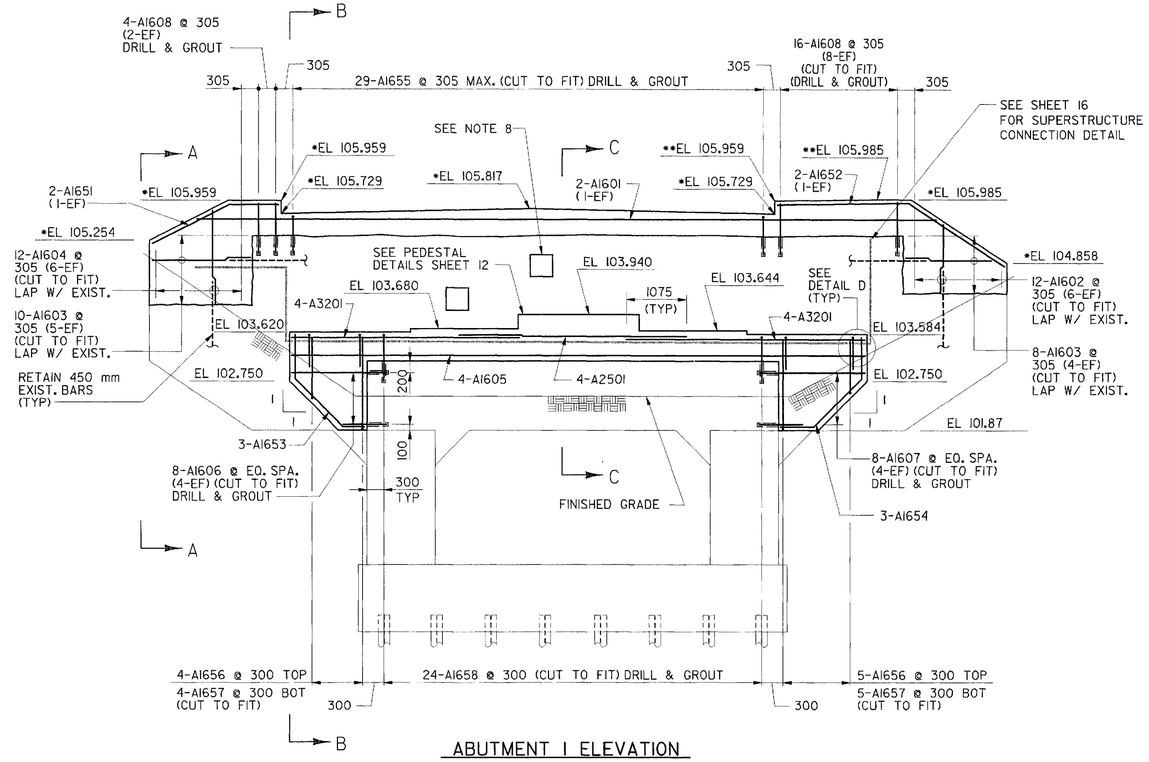

ABUTMENT 1 ELEVATION

* ELEVATIONS GIVEN AT NEAR FACE OF BACKWALL.
** ELEVATIONS GIVEN AT TOP OF CURB PLATE EXPANSION DAM, NEAR FACE.

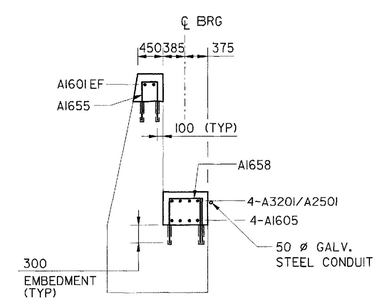

SECTION C-C

SUBSTRUCTURE NOTES

1. REINFORCING STEEL SHALL HAVE 50 mm COVER IN THE WALLS AND 75 mm COVER IN THE FOOTINGS UNLESS OTHERWISE NOTED.
2. COVER JOINTS IN ACCORDANCE WITH STANDARD DETAIL 502(1) WHERE WATERSTOPS ARE NOT REQUIRED.
3. CONSTRUCT FRENCH DRAINS BEHIND THE RETAINING WALL IN ACCORDANCE WITH STANDARD SPECIFICATION SECTION 512, FRENCH DRAINS.
4. STRUCTURAL EARTH EXCAVATION REQUIRED BELOW ELEVATION 106.000 WILL BE PAID FOR AT 1.5 TIMES THE CONTRACT UNIT PRICE FOR ITEM 206.082, STRUCTURAL EARTH EXCAVATION - MAJOR STRUCTURES.
5. ABUTMENTS, RETAINING WALLS AND WINGS SHALL BE BACKFILLED WITH GRAVEL BORROW. PAY LIMITS WILL BE THE STRUCTURAL EXCAVATION LIMITS.
6. MAXIMUM CALCULATED FOOTING PRESSURE FOR RETAINING WALL IS 110 kPa.
7. BLAST CLEAN AND ROUGHEN EXISTING CONCRETE AT INTERFACE BETWEEN NEW AND EXISTING CONCRETE. COST INCIDENTAL TO ITEM 502.21 AND ITEM 502.23.
8. FILL BLOCK OUTS WITH CONCRETE FULL DEPTH OF WALL. COST INCLUDED IN ITEM 502.21.

PROJECT DESIGN ENGINEER	BY	DATE
DESIGN-DETAILED	S HODGDON	1/12/01
CHECKED	C CILLEY	1/12/01
REVISIONS	S JOHNSON	
FIELD CHANGES		

PLANS

BRIDGE NO. 3874

STATE OF MAINE
DEPARTMENT OF TRANSPORTATION

HIGHLAND AVENUE BRIDGE
OVER
MEDUXNEKEAG RIVER
IN THE TOWN OF
HOULTON
AROOSTOOK COUNTY

ABUTMENT NO 1 MODIFICATIONS

VANASSE HANGEN BRUSTLIN, INC.

51075MA1.DGN

MDOT PIN 007630.00

METRIC	1. All dimensions are in millimeters unless otherwise noted. 2. All elevations and stations are in meters.	F.H.W.A. REG. NO.	STATE	PROJECT NUMBER	SHEET NO.	TOTAL SHEETS
		1	MAINE	BR-7630(XXX)	12	21

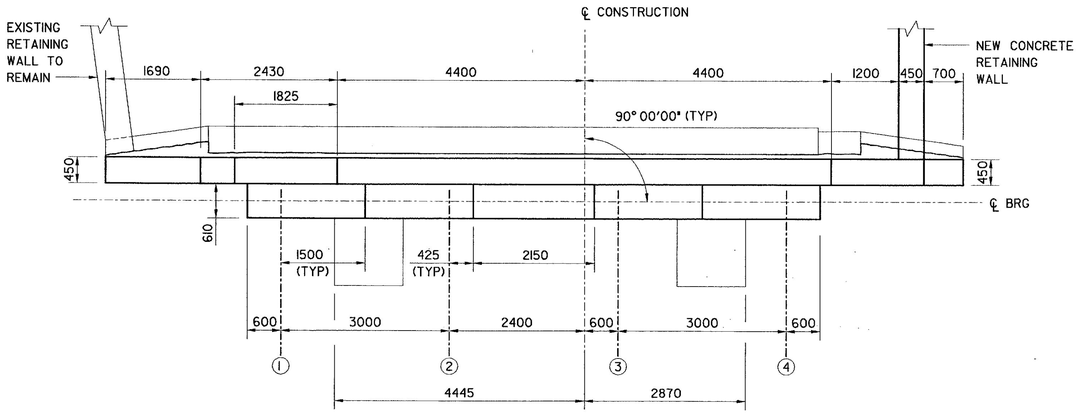

ABUTMENT 2 PLAN
(PILE CAP NOT SHOWN)

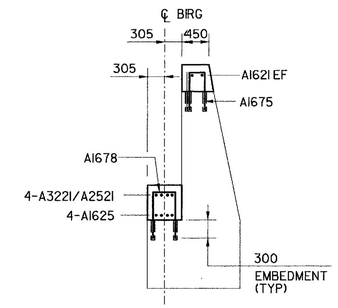

SECTION A-A

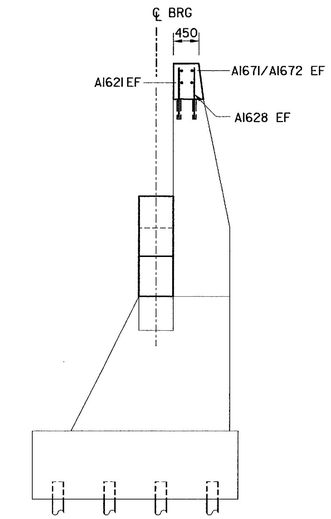

SECTION B-B

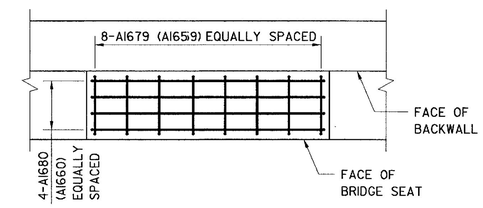

PEDESTAL DETAIL
ABUTMEINT NO 1 IN ( )

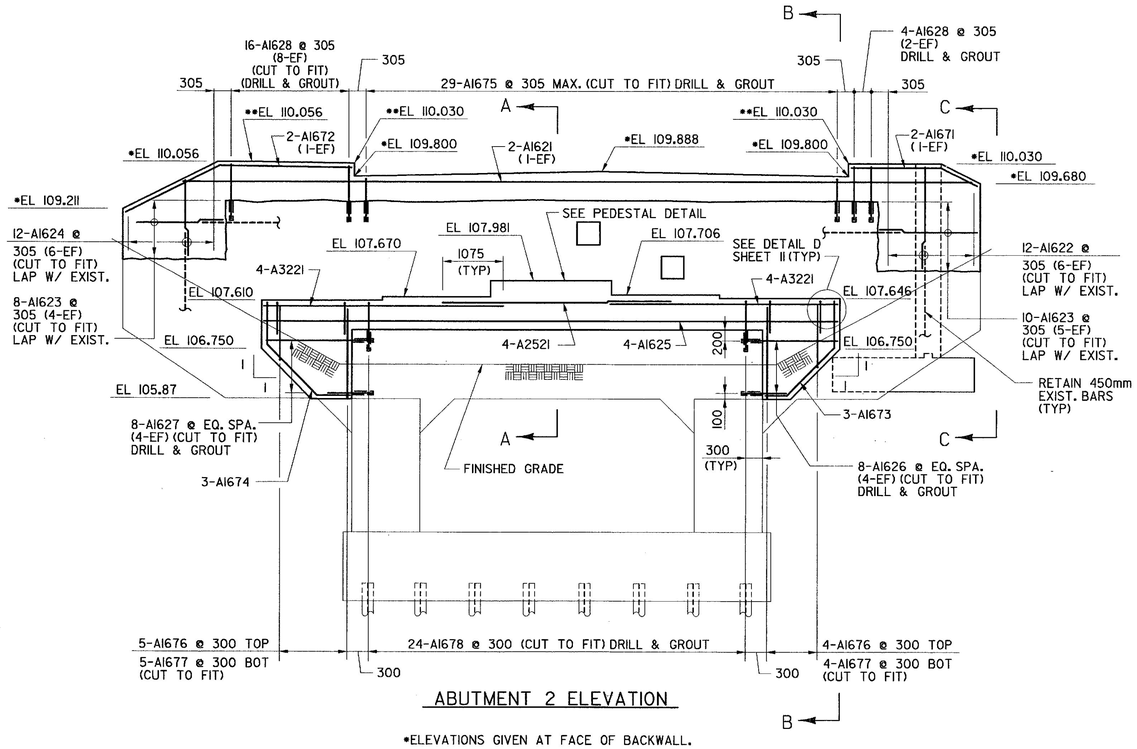

ABUTMENT 2 ELEVATION

•ELEVATIONS GIVEN AT FACE OF BACKWALL.

•• ELEVATIONS GIVEN AT TOP OF CURB PLATE EXPANSION DAM, NEAR FACE.

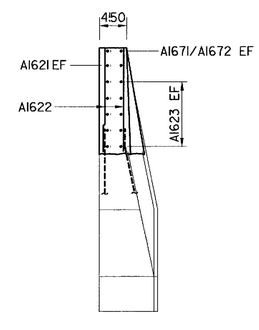

VIEW C-C

PROJECT DESIGN ENGINEER	BY	DATE
DESIGN-DETAILED	S HODGDON / C GILLEY	1/12/01
CHECKED	S JOHNSON	1/12/01
REVISIONS		
FIELD CHANGES		

PLANS

BRIDGE NO. 3874

STATE OF MAINE
DEPARTMENT OF TRANSPORTATION

HIGHLAND AVENUE BRIDGE
OVER
MEDUXNEKEAG RIVER
IN THE TOWN OF
HOULTON
AROOSTOOK COUNTY

ABUTMENT NO. 2 MODIFICATIONS

VANASSE HANGEN BRUSTLIN, INC.

SHEET 12 OF 21 AUGUSTA, MAINE DECEMBER 2000

51075MA2.DGN

METRIC
1. All dimensions are in millimeters unless otherwise noted.
2. All elevations and stations are in meters.

F.H.W.A. REG. NO.	STATE	PROJECT NUMBER	SHEET NO.	TOTAL SHEETS
1	MAINE	BR-7630(003)X	13	21

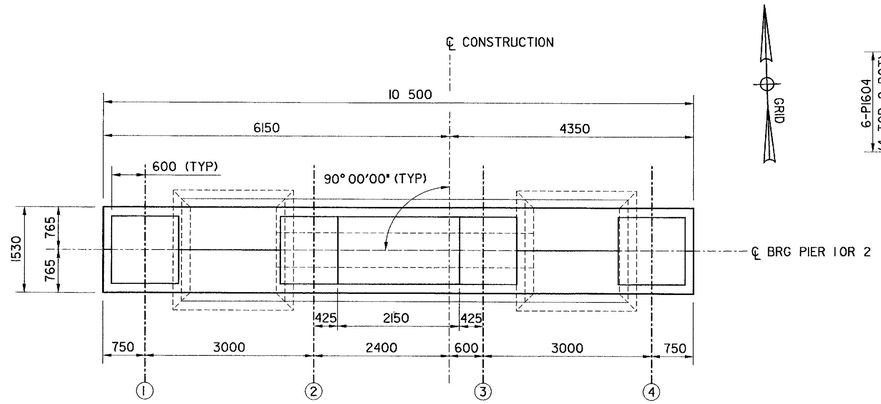

PLAN
(PIER 1 SHOWN, PIER 2 SIMILAR)

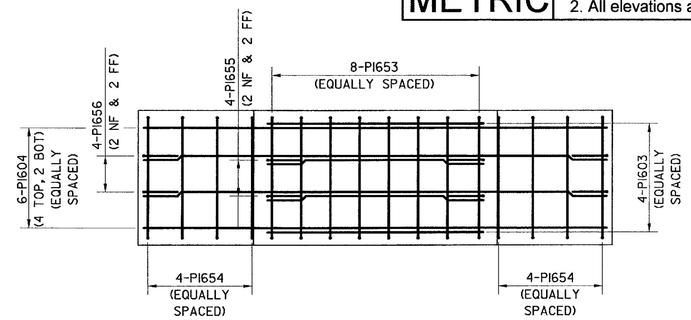

PLAN

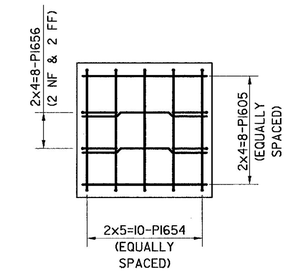

PLAN

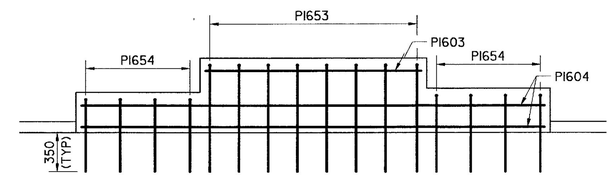

ELEVATION

SHEAR BLOCK DETAIL

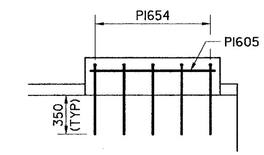

ELEVATION

PEDESTAL DETAIL

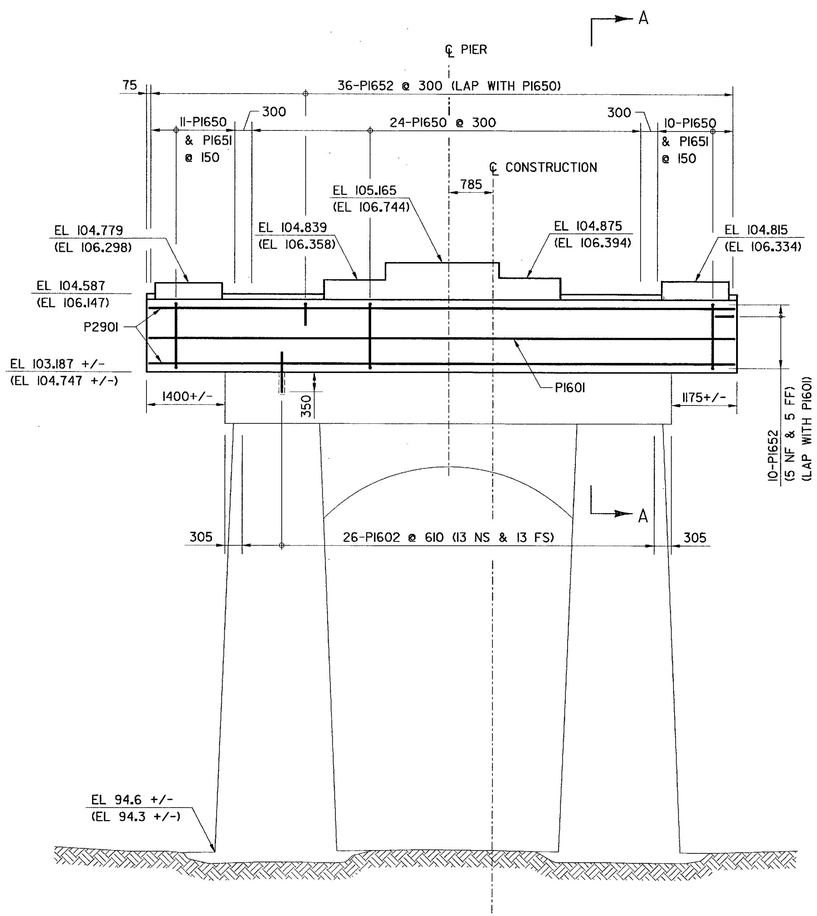

ELEVATION
PIER 2 ELEVATIONS SHOWN IN ( )

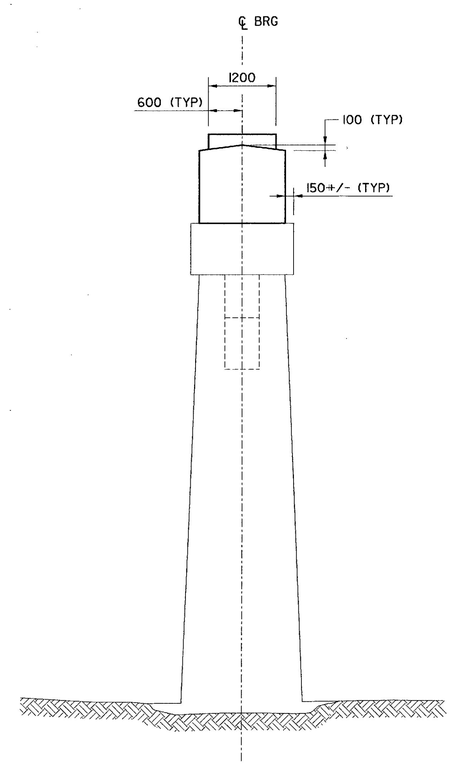

END VIEW

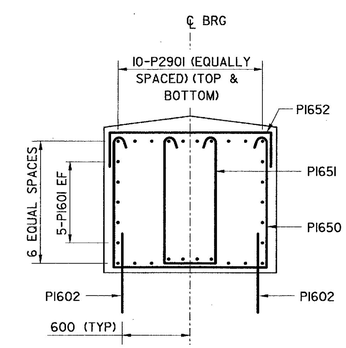

SECTION A-A
(EXISTING PIER NOT SHOWN)

PROJECT DESIGN ENGINEER	BY	DATE
DESIGN-DETAILED	S HODGDON	1/12/01
CHECKED	C OLLEY	1/12/01
REVISIONS	S JOHNSON	1/12/01
FIELD CHANGES		

PLANS

BRIDGE NO. 3874

STATE OF MAINE
DEPARTMENT OF TRANSPORTATION

HIGHLAND AVENUE BRIDGE
OVER
MEDUXNEKEAG RIVER
IN THE TOWN OF
HOULTON
AROOSTOOK COUNTY

PIER MODIFICATIONS

VANASSE HANGEN BRUSTLIN, INC.

SHEET 13 OF 21 AUGUSTA, MAINE DECEMBER 2000

51075PA1.DGN

METRIC	1. All dimensions are in millimeters unless otherwise noted. 2. All elevations and stations are in meters.	F.H.W.A. REG. NO.	STATE	PROJECT NUMBER	SHEET NO.	TOTAL SHEETS
		1	MAINE	BR-7630(00)X	14	21

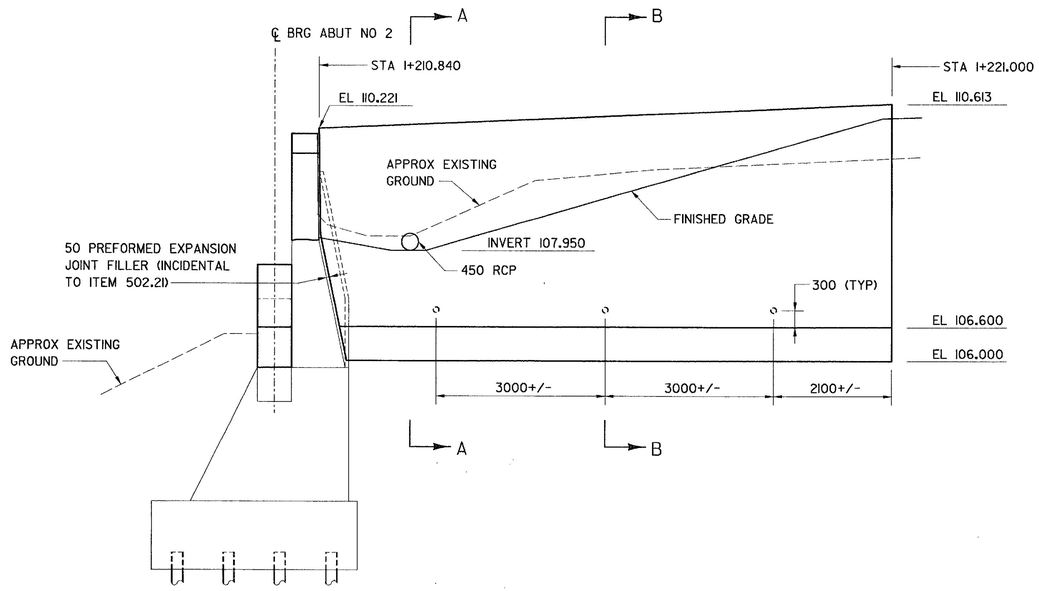

RETAINING WALL ELEVATION

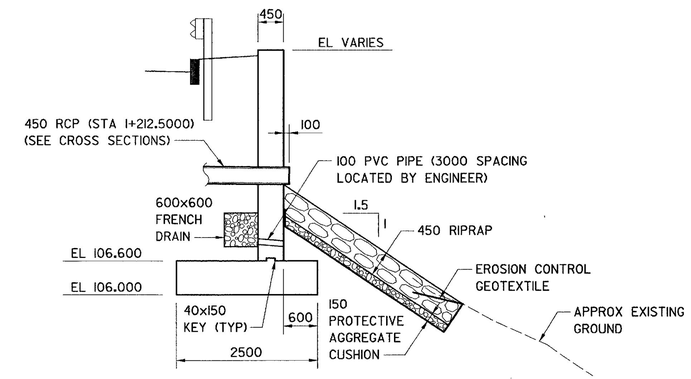

SECTION A-A

(STA 1+210.840 TO STA 1+214.000)

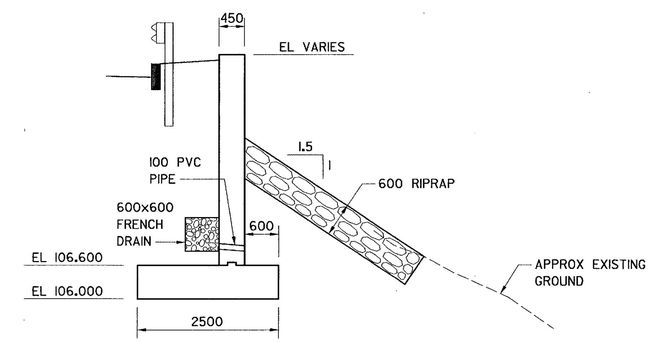

SECTION B-B

(STA 1+214.000 TO STA 1+221.000)

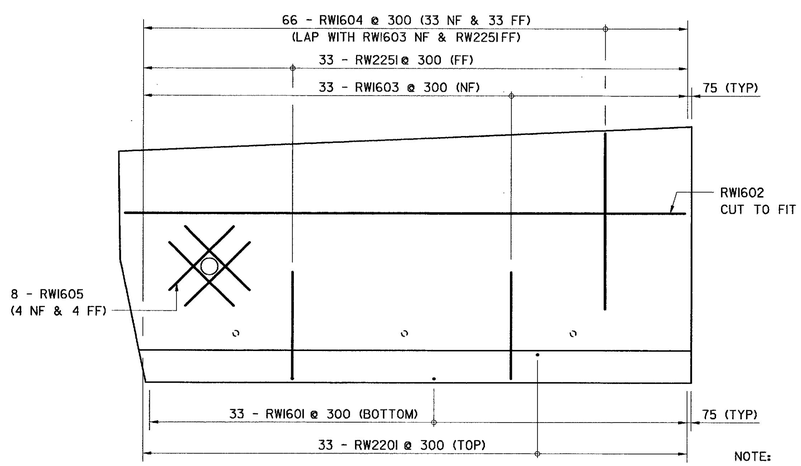

NOTE:

CUT TO FIT REINFORCING STEEL AS REQUIRED TO ACCOMMODATE 450 RCP.

RETAINING WALL REINFORCEMENT - ELEVATION

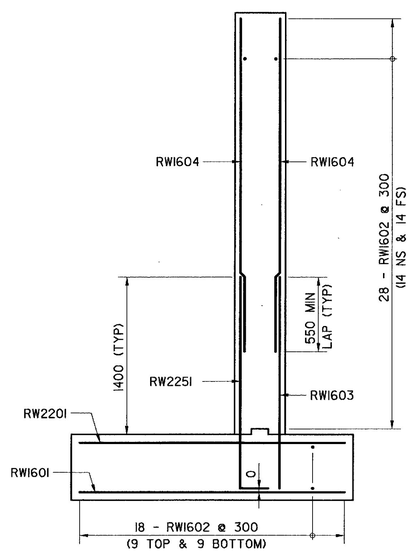

RETAINING WALL REINFORCEMENT - TYPICAL SECTION

PROJECT DESIGN ENGINEER	BY	DATE
DESIGN-DETAILED	S HODGDON	1/12/01
CHECKED	C CILLEY	1/12/01
REVISIONS	S JOHNSON	
FIELD CHANGES		

PLANS

BRIDGE NO. 3874

STATE OF MAINE
DEPARTMENT OF TRANSPORTATION

HIGHLAND AVENUE BRIDGE
OVER
MEDUXNEKEAG RIVER
IN THE TOWN OF
HOULTON
AROOSTOOK COUNTY

RETAINING WALL DETAILS

VANASSE HANGEN BRUSTLIN, INC.

51075RM1.DGN

MDOT PIN 007630.00

METRIC	1. All dimensions are in millimeters unless otherwise noted. 2. All elevations and stations are in meters.	F.H.W.A. REG. NO.	STATE	PROJECT NUMBER	SHEET NO.	TOTAL SHEETS
		1	MAINE	BR-7630(100)X	15	21

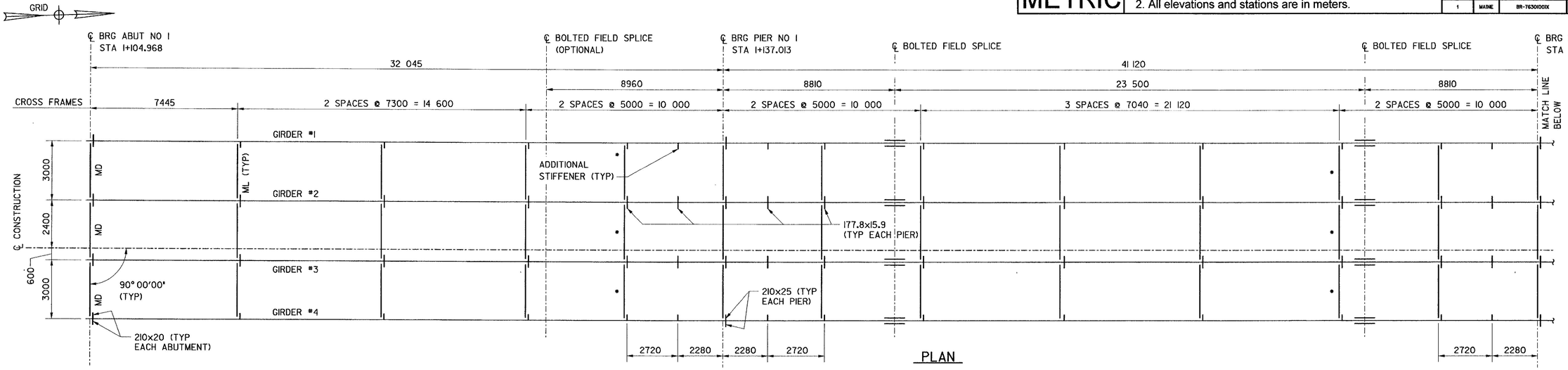

PLAN

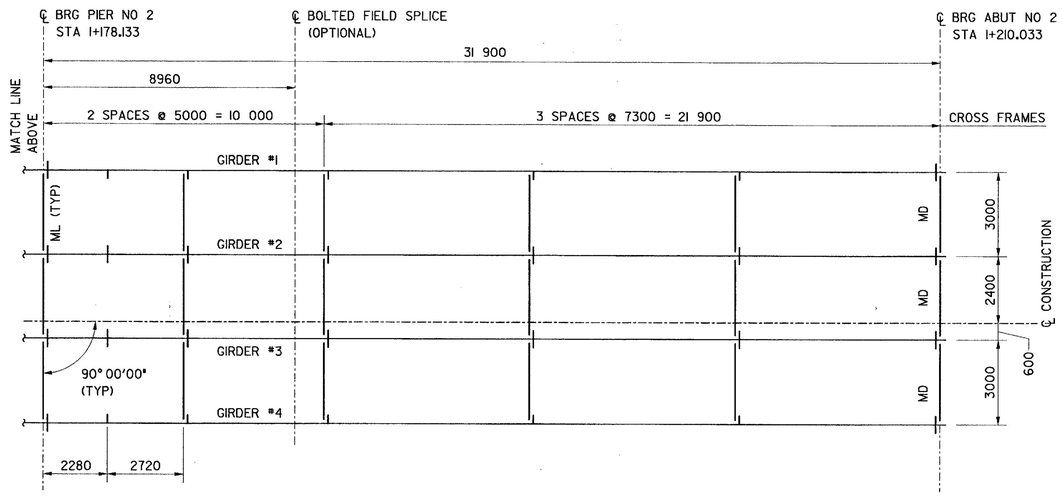

PLAN

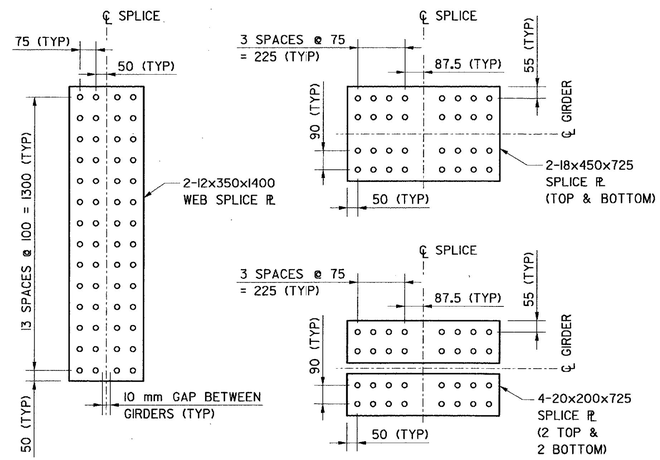

FIELD SPLICE DETAILS

(DETAILS MAY BE USED AT OPTIONAL FIELD SPLICE LOCATIONS SHOWN)

STRUCTURAL STEEL NOTES

1. CAMBER ORDINATES, AS SHOWN, ARE COMPUTED TO COMPENSATE FOR ALL DEAD LOAD DEFLECTIONS AND FOR THE CURVATURE OF THE FINISHED GRADE PROFILE.
2. NO TRANSVERSE BUTT-WELD SPLICES WILL BE ALLOWED IN THE FLANGE PLATES OR WEB PLATES WITHIN 3.0 m OR 10 PERCENT OF THE SPAN LENGTH (WHICHEVER IS GREATER) FROM THE POINTS OF MAXIMUM NEGATIVE MOMENT OR MAXIMUM POSITIVE MOMENT. BUTT-WELD SPLICES IN FLANGES SHALL BE NOT LESS THAN 1.0 m FROM TRANSVERSE BUTT-WELDS IN THE WEB PLATES AND NO TRANSVERSE WEB OR FLANGE BUTT-WELDS SHALL BE LOCATED WITHIN 1.0 m OF OTHER TRANSVERSE WELDS (E.G. CONNECTION PLATES TO WEB WELDS) ON EITHER FLANGE OR WEB. NO TRANSVERSE BUTT-WELD SPLICES WILL BE ALLOWED IN AREAS OF STRESS REVERSAL.
3. SECTIONS OF FLANGE PLATES OR WEB PLATES BETWEEN TRANSVERSE SHOP SPLICES OR BETWEEN A TRANSVERSE SHOP SPLICE AND A FIELD SPLICE SHALL NOT BE LESS THAN 3.0 m IN LENGTH UNLESS OTHERWISE SHOWN ON THE PLANS.
4. BEARING STIFFENERS SHALL BE PLUMB AFTER ERECTION AND DEAD LOADING OF THE STRUCTURE. INTERMEDIATE WEB STIFFENERS MAY BE EITHER PLUMB OR NORMAL TO THE TOP FLANGE.
5. CROSS-FRAME OR DIAPHRAGM CONNECTION PLATES MAY BE EITHER PLUMB OR NORMAL TO THE TOP FLANGE.
6. AT LOCATIONS MARKED WITH AN ASTERISK (*) THE DESIGNATED DIAPHRAGMS SHALL BE CHANGED TO A TYPE MD DIAPHRAGM AS REQUIRED TO ACCOMMODATE THE CONTRACTOR'S DECK PLACEMENT SEQUENCE. NO EXTRA COMPENSATION WILL BE ALLOWED FOR ANY DIAPHRAGMS SO SUBSTITUTED, AND ANY ADDITIONAL COSTS WILL BE CONSIDERED INCIDENTAL TO THE CONTRACT ITEMS.
7. ALL STEEL SHALL CONFORM TO ASTM A709/A709M GRADE 345W (UNPAINTED).

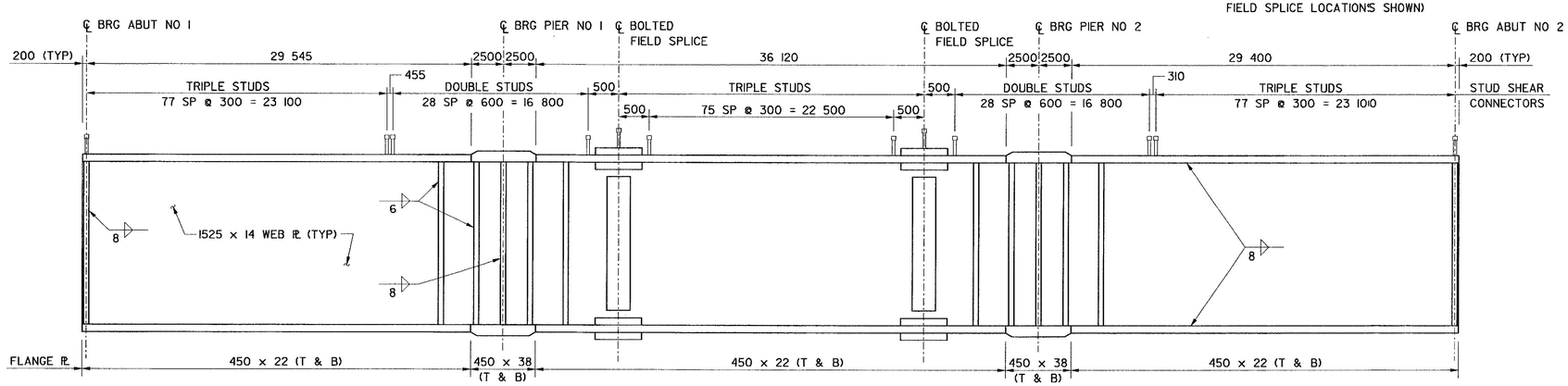

TYPICAL INTERIOR BEAM ELEVATION

(CONNECTION PLATES NOT SHOWN)
NOT TO SCALE

PROJECT DESIGN ENGINEER	BY	DATE
DESIGN-DETAILED	S HODGDON	1/12/01
CHECKED	C CILLEY	1/12/01
REVISIONS	S JOHNSON	
FIELD CHANGES		

PLANS

BRIDGE NO. 3874

STATE OF MAINE
DEPARTMENT OF TRANSPORTATION

HIGHLAND AVENUE BRIDGE
OVER
MEDUXNEKEAG RIVER
IN THE TOWN OF
HOULTON
AROOSTOOK COUNTY

STRUCTURAL STEEL DETAILS

VANASSE HANGEN BRUSTLIN, INC.

SHEET 15 OF 21 AUGUSTA, MAINE DECEMBER 2000

51075FRP.DGN

METRIC	1. All dimensions are in millimeters unless otherwise noted. 2. All elevations and stations are in meters.	F.H.W.A. REG. NO.	STATE	PROJECT NUMBER	SHEET NO.	TOTAL SHEETS
		1	MAINE	BR-7630(001)X	16	21

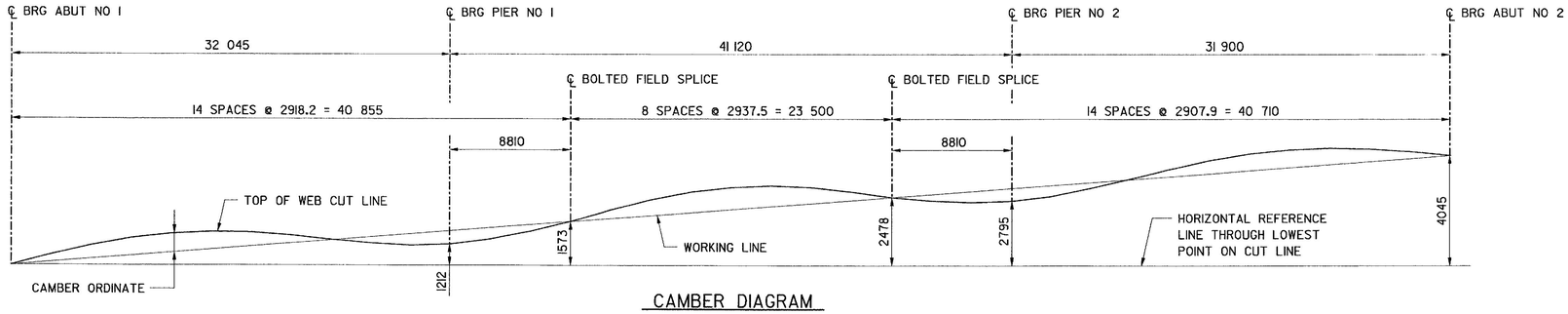

CAMBER DIAGRAM

NOT TO SCALE

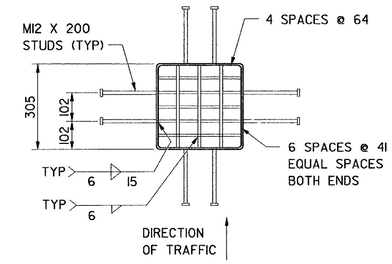

PLAN

CAMBER ORDINATES																																					
℄ BRG ABUT NO 1	14 EQUAL SPACES													℄ FIELD SPLICE NO 1	8 EQUAL SPACES							℄ FIELD SPLICE NO 2	14 EQUAL SPACES														℄ BRG ABUT NO 2
0	12	22	29	31	29	23	13	1	-10	-19	-22	-19	-11	0	13	24	31	33	31	24	13	0	-11	-19	-22	-19	-10	1	13	23	29	31	29	22	12	0

BOTTOM OF SLAB ELEVATIONS																								
LOCATION	℄ BRG ABUT NO 1	3 m	6 m	9 m	12 m	15 m	18 m	21 m	24 m	27 m	30 m	℄ BRG PIER NO 1	3 m	6 m	9 m	12 m	15 m	18 m	21 m	24 m	27 m	30 m
GIRDER #1	105.414	105.542	105.668	105.791	105.910	106.025	106.136	106.244	106.351	106.458	106.569	106.647	106.768	106.893	107.019	107.146	107.271	107.393	107.510	107.622	107.731	107.836
GIRDER #2	105.474	105.602	105.728	105.851	105.970	106.085	106.196	106.304	106.411	106.518	106.629	106.707	106.828	106.953	107.079	107.206	107.331	107.453	107.570	107.682	107.791	107.896
GIRDER #3	105.510	105.638	105.764	105.887	106.006	106.121	106.232	106.340	106.447	106.554	106.665	106.743	106.864	106.989	107.115	107.242	107.367	107.489	107.606	107.718	107.827	107.932
GIRDER #4	105.450	105.578	105.704	105.827	105.946	106.061	106.172	106.280	106.387	106.494	106.605	106.683	106.804	106.929	107.055	107.182	107.307	107.429	107.546	107.658	107.767	107.872

BOTTOM OF SLAB ELEVATIONS															
LOCATION	33 m FROM PIER NO 1	36 m	39 m	℄ BRG PIER NO 2	3 m	6 m	9 m	12 m	15 m	18 m	21 m	24 m	27 m	30 m	℄ BRG ABUT NO 2
GIRDER #1	107.940	108.044	108.152	108.230	108.347	108.469	108.593	108.717	108.839	108.957	109.072	109.183	109.289	109.393	109.458
GIRDER #2	108.000	108.104	108.212	108.290	108.407	108.529	108.653	108.777	108.899	109.017	109.132	109.243	109.349	109.453	109.518
GIRDER #3	108.036	108.140	108.248	108.326	108.443	108.565	108.689	108.813	108.935	109.053	109.168	109.279	109.385	109.489	109.554
GIRDER #4	107.976	108.080	108.188	108.266	108.383	108.505	108.629	108.753	108.875	108.993	109.108	109.219	109.325	109.429	109.494

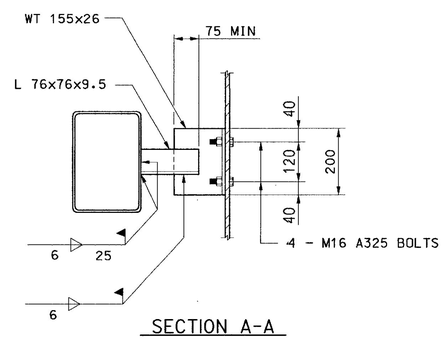

SECTION A-A

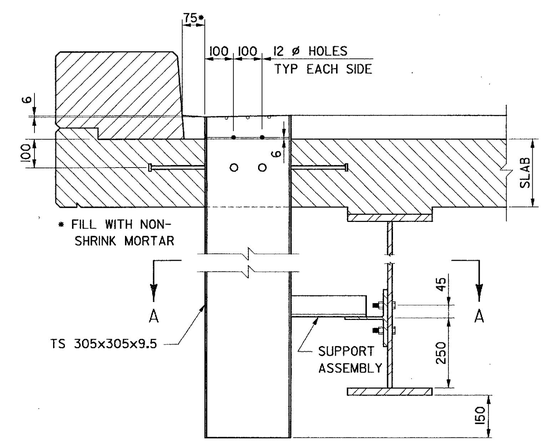

TYPICAL SECTION

BRIDGE DRAIN NOTES:

1. ALL PLATES, IF ANY, SHALL BE 8 mm THICK AND SHALL CONFORM TO ASTM A709/A709M GRADE 250.
2. GRATING SHALL BE A COMMERCIAL HEAVY-DUTY GRATING WITH 38x8 mm BEARING BARS AND 10 mm CROSS BARS.
3. PAYMENT FOR BRIDGE DRAINS WILL BE AS SPECIFIED UNDER SUBSECTION 502.19 OF THE STANDARD SPECIFICATIONS.
4. DRAINS AND L 76x76x9.5 SHALL BE BLAST CLEANED TO THE REQUIREMENTS OF SSPC-SP6/NACE 3 AND HOT-DIPPED GALVANIZED IN ACCORDANCE WITH ASTM A123. STEEL BEAM ATTACHMENT, WT155x26 (AND ASSOCIATED FASTENER HARDWARE) SHALL MEET THE MATERIAL SPECIFICATION AND HAVE THE SAME PROTECTIVE COATING, IF ANY, AS THE STRUCTURAL STEEL.

BRIDGE DRAIN DETAILS

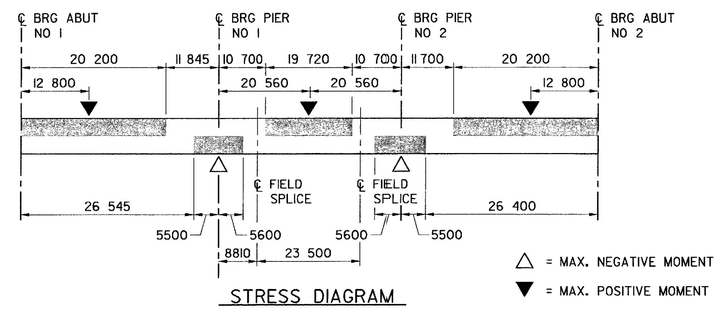

STRESS DIAGRAM

(SHADED AREAS ARE ALWAYS IN COMPRESSION. OTHER AREAS ARE IN TENSION OR HAVE STRESS REVERSAL)

PROJECT DESIGN ENGINEER	BY	DATE
DESIGN-DETAILED	S HODGDON	1/12/01
CHECKED	C CILLEY	1/12/01
REVISIONS	S JOHNSON	1/12/01
FIELD CHANGES		

PLANS

BRIDGE NO. 3874

STATE OF MAINE
DEPARTMENT OF TRANSPORTATION

HIGHLAND AVENUE BRIDGE
OVER
MEDUXNEKEAG RIVER
IN THE TOWN OF
HOULTON
AROOSTOOK COUNTY

STRUCTURAL STEEL DETAILS

VANASSE HANGEN BRUSTLIN, INC.

51075SS1.DGN

METRIC	1. All dimensions are in millimeters unless otherwise noted. 2. All elevations and stations are in meters.	F.H.W.A. REG. NO.	STATE	PROJECT NUMBER	SHEET NO.	TOTAL SHEETS
		1	MAINE	BR-7630(001)X	17	21

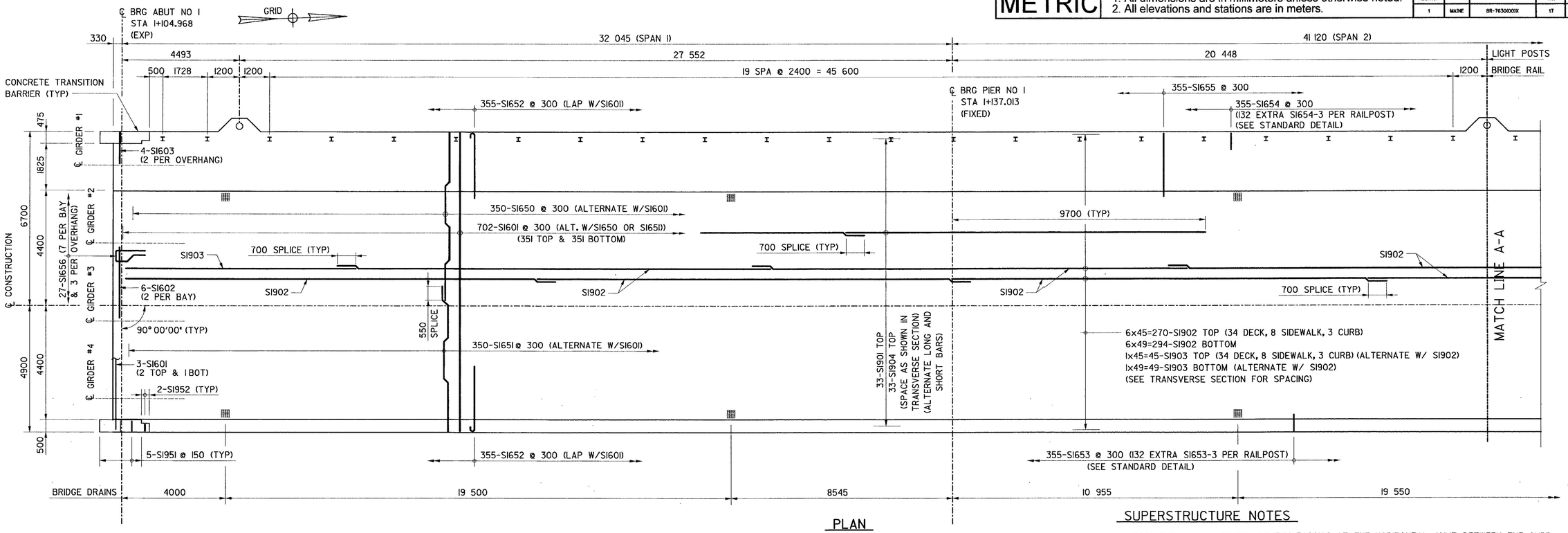

PLAN

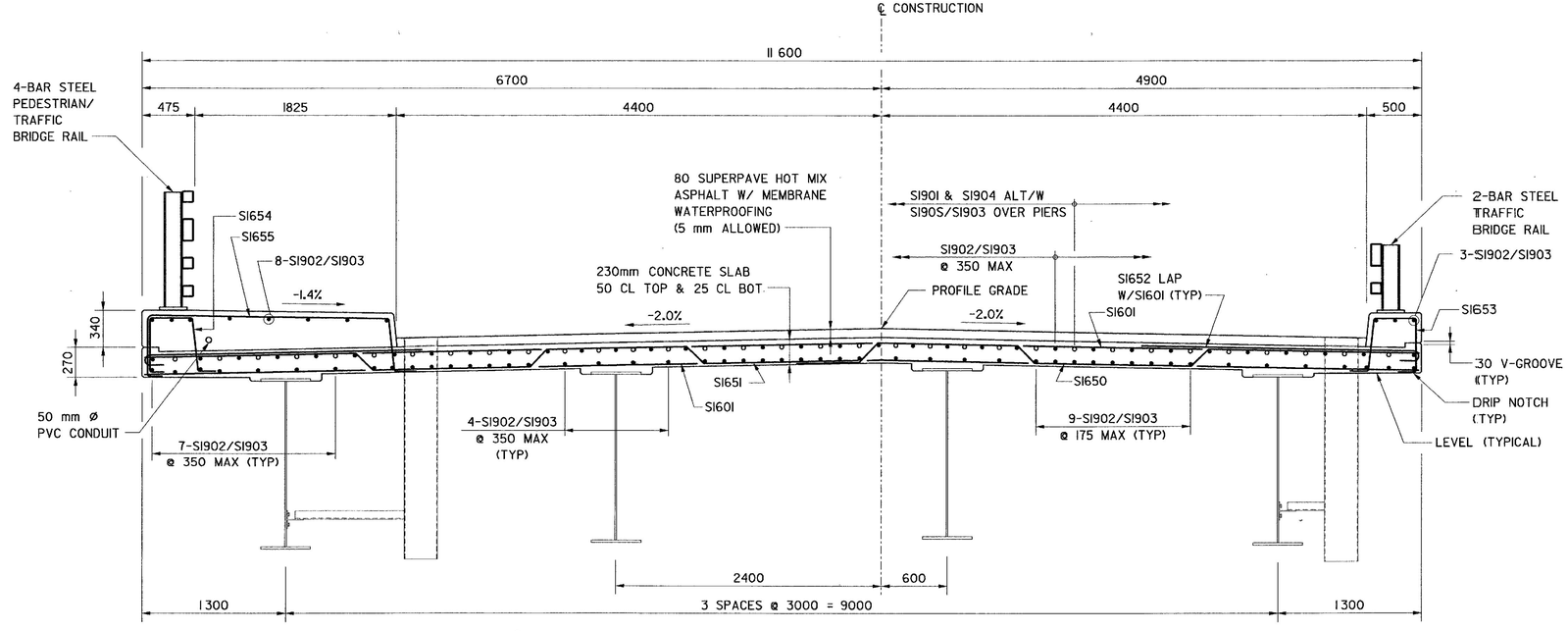

TRANSVERSE SECTION

SUPERSTRUCTURE NOTES

1. FORM A 30 mm V-GROOVE ON THE FASCIAS AT THE HORIZONTAL JOINT BETWEEN THE CURB OR SIDEWALK AND SLAB.
2. REINFORCING STEEL SHALL HAVE A MINIMUM COVER OF 50 mm UNLESS OTHERWISE NOTED.
3. ADJUST REINFORCING STEEL TO FIT AROUND THE BRIDGE DRAINS IN A MANNER APPROVED BY THE ENGINEER. DO NOT CUT TRANSVERSE REINFORCING BARS.
4. UNLESS THE SUPERSTRUCTURE SLAB CONCRETE IS PLACED IN ONE CONTINUOUS OPERATION, THE INITIAL PLACEMENT SHALL START AT A SIMPLY SUPPORTED END OF THE DECK SLAB AND SHALL TERMINATE AT THE COMPLETION OF A POSITIVE MOMENT SECTION. SUCCESSIVE PLACEMENTS SHALL PROCEED FROM THE END OF THE PREVIOUS PLACEMENT, TERMINATE AT THE COMPLETION OF A POSITIVE MOMENT SECTION, AND INCLUDE TWO OR MORE SPANS. THE PLACEMENT SEQUENCE OF THE SUPERSTRUCTURE SLAB CONCRETE SHALL BE APPROVED BY THE ENGINEER.
5. CONCRETE IN A PLACEMENT SHALL BE KEPT PLASTIC ONE COMPLETE SPAN BEHIND THE SPAN BEING PLACED. A MINIMUM OF FIVE DAYS SHALL ELAPSE BETWEEN SUCCESSIVE PARTIAL PLACEMENTS.
6. THE FORMWORK AND ITS SUPPORTS, OVER THE FULL WIDTH OF THE STRUCTURAL SLAB, SHALL REMAIN IN PLACE UNTIL A MINIMUM OF 48 HOURS HAS ELAPSED AFTER PLACEMENT OF THE FINAL SECTION OF THE SLAB, AFTER WHICH, REMOVAL OF FORMWORK FOR SECTIONS MEETING THE REQUIREMENTS FOR FORM REMOVAL OF SECTION 502, STRUCTURAL CONCRETE, OF THE STANDARD SPECIFICATIONS, MAY PROCEED.
7. THE SEALS TO BE FURNISHED SHALL HAVE A MINIMUM MOVEMENT RATING OF:
   ABUTMENT NUMBER 1 = 34 mm (COMPRESSION SEAL)
   ABUTMENT NUMBER 2 = 76 mm (GLAND SEAL)
8. THE SEALS SHALL BE APPROVED BY THE ENGINEER PRIOR TO FABRICATION OF THE JOINT ARMOR.
9. THE THEORETICAL BLOCKING USED FOR DESIGN OF THE STRUCTURE IS 100 mm AT THE CENTERLINE OF BEARINGS AT THE ABUTMENTS AND PIERS. SEE STANDARD DETAIL 502(2) FOR BLOCKING DETAILS.
10. AT THE CONTRACTOR'S OPTION, PRECAST DECK PANELS MAY BE USED IN PLACE OF THE FULL DEPTH CAST-IN-PLACE DECK SLAB IN ACCORDANCE WITH SPECIAL PROVISION 502, STRUCTURAL CONCRETE - PRECAST DECK PANELS, AND IN ACCORDANCE WITH THE STANDARD DETAILS. PAYMENT FOR THE REINFORCING STEEL FABRICATED, DELIVERED, AND PLACED IN THE CAST-IN-PLACE PORTION OF THE STRUCTURAL CONCRETE SLAB WILL BE CONSIDERED INCIDENTAL TO THE APPROPRIATE 502 ITEM.

PROJECT DESIGN ENGINEER	BY	DATE
DESIGN-DETAILED	S HODGDON	1/12/01
CHECKED	C GILLEY	1/12/01
REVISIONS	S JOHNSON	
FIELD CHANGES		

PLANS

BRIDGE NO. 3874

STATE OF MAINE
DEPARTMENT OF TRANSPORTATION

HIGHLAND AVENUE BRIDGE
OVER
MEDUXNEKEAG RIVER
IN THE TOWN OF
HOULTON
AROOSTOOK COUNTY

SUPERSTRUCTURE DETAILS

VANASSE HANGEN BRUSTLIN, INC.

51075DK1.DGN

MDOT PIN 007630.00

METRIC 1. All dimensions are in millimeters unless otherwise noted. 2. All elevations and stations are in meters.

F.H.W.A. REG. NO.	STATE	PROJECT NUMBER	SHEET NO.	TOTAL SHEETS
1	MAINE	BR-7630(003)X	18	21

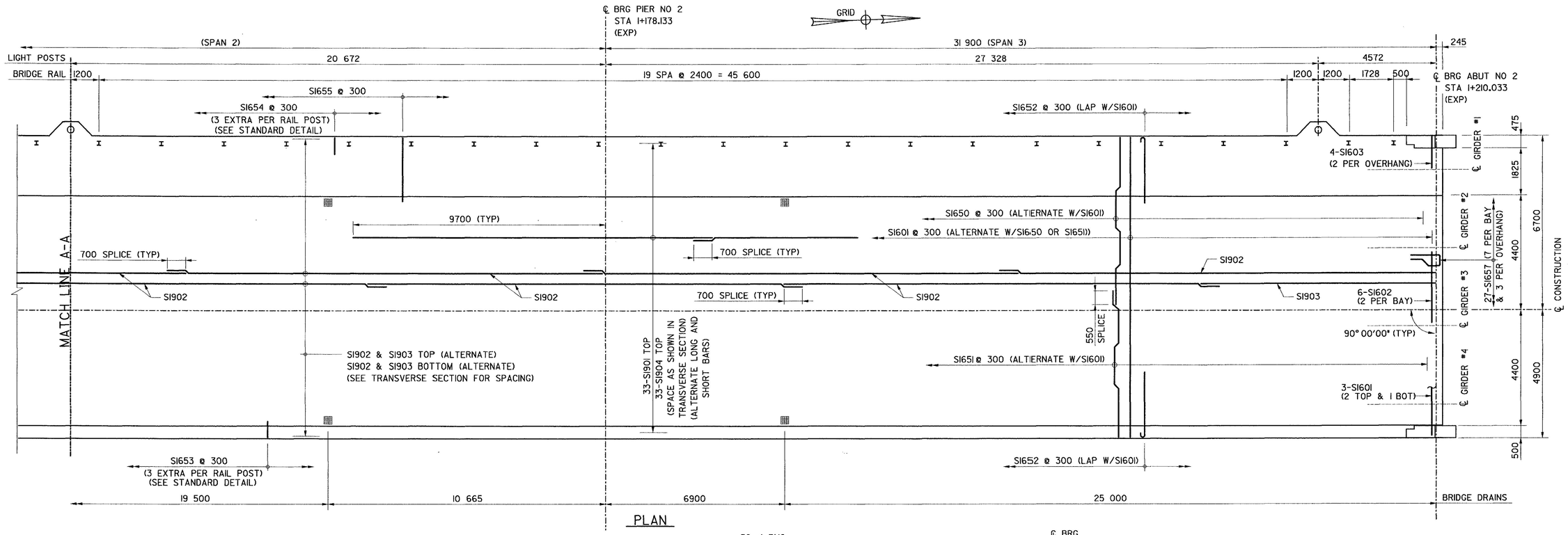

PLAN

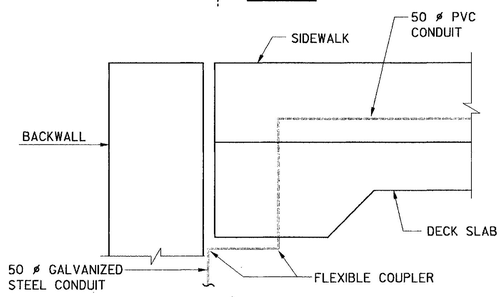

ABUTMENT NO 1/SUPERSTRUCTURE CONDUIT CONNECTION

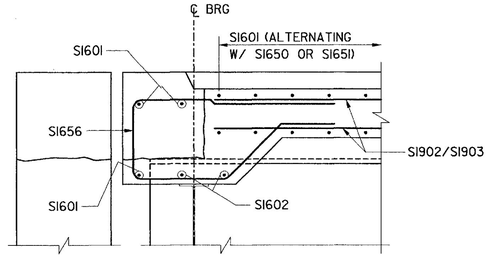

ABUTMENT NO 1 DECK END DETAIL

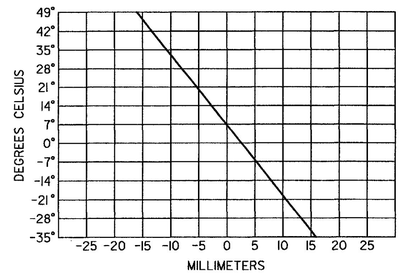

COMPRESSION SEAL ADJUSTMENT CHART
(ABUTMENT NO. 1)

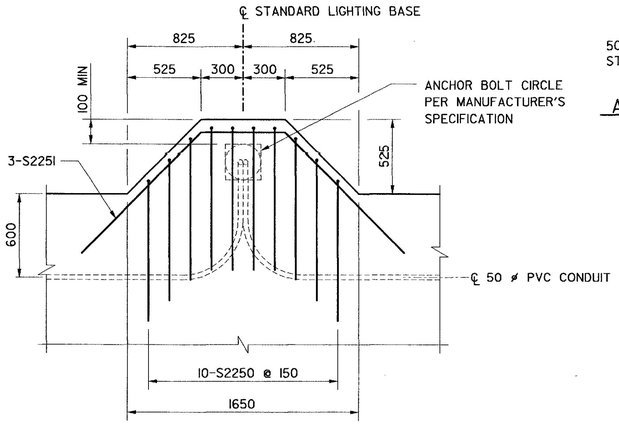

PLAN - STANDARD LIGHT BASE

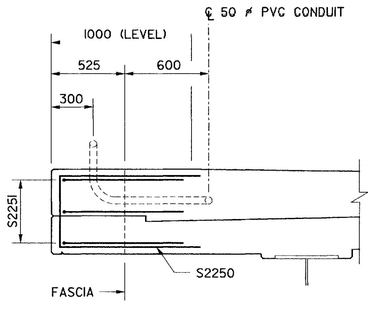

SECTION THRU STANDARD LIGHT BASE

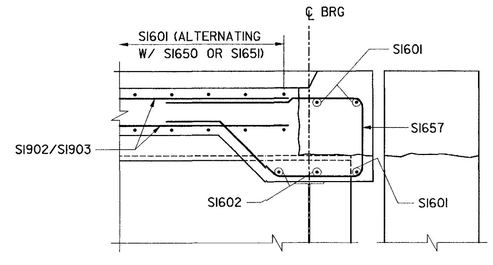

ABUTMENT NO 2 DECK END DETAIL

PROJECT DESIGN ENGINEER	BY	DATE
DESIGN-DETAILED	S HODGDON	1/12/01
CHECKED	C CILLEY	1/12/01
REVISIONS	S JOHNSON	
FIELD CHANGES		

PLANS

BRIDGE NO. 3874

STATE OF MAINE
DEPARTMENT OF TRANSPORTATION

HIGHLAND AVENUE BRIDGE
OVER
MEDUXNEKEAG RIVER
IN THE TOWN OF
HOULTON
AROOSTOOK COUNTY

SUPERSTRUCTURE DETAILS

VANASSE HANGEN BRUSTLIN, INC.

SHEET 18 OF 21 AUGUSTA, MAINE DECEMBER 2000

51075DK2.DGN

METRIC	1. All dimensions are in millimeters unless otherwise noted. 2. All elevations and stations are in meters.	F.H.W.A. REG. NO.	STATE	PROJECT NUMBER	SHEET NO.	TOTAL SHEETS
		1	MAINE	BR-7630(100)X	19	21

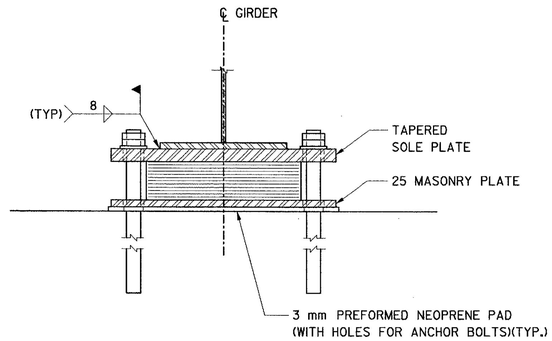

END VIEW

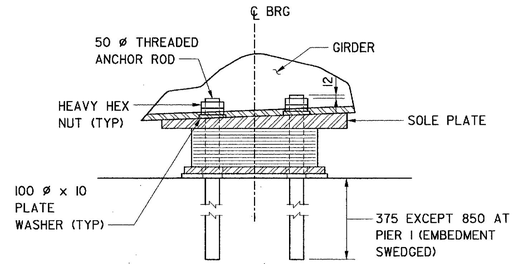

SIDE VIEW

TYPICAL BEARING ASSEMBLY

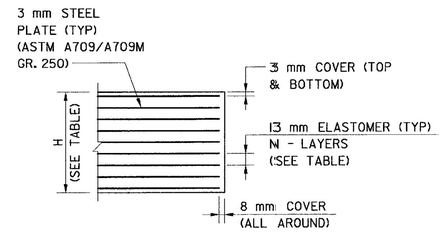

TYPICAL STEEL REINFORCED ELASTOMERIC BEARING

ELASTOMERIC BEARING NOTES:

1. THE SHEAR MODULUS SHALL BE BETWEEN 0.70 AND 0.90 MPa.
2. BEARINGS SHALL BE COVERED DURING TRANSIT.
3. THE MASONRY PLATES, SOLE PLATES AND ANCHOR BOLTS SHALL MEET THE REQUIREMENTS OF ASTM A709/A709M, GRADE 345W. THE MASONRY PLATE SHALL BE HOT DIPPED GALVANIZED PRIOR TO VULCANIZING ELASTOMERIC BEARING TO MASONRY PLATE. ANY SURFACES WITHOUT A GALVANIZED COATING OUTSIDE THE PERIMETER OF THE ELASTOMERIC BEARING SHALL BE TOUCHED UP WITH ZINC-RICH PAINT AS NECESSARY AFTER THE BEARING IS VULCANIZED TO THE MASONRY PLATE.
4. VULCANIZING ELASTOMER TO STEEL PLATES SHALL BE DONE DURING THE PRIMARY MOLD PROCESS.
5. THE BEARINGS ARE DESIGNED SO THAT THE SUPERSTRUCTURE MAY BE ERECTED WHEN THE AMBIENT AIR TEMPERATURE IS WITHIN THE RANGE OF 7 DEGREES CELSIUS AND 24 DEGREES CELSIUS.
6. ANCHOR BOLT NUTS SHALL BE TURNED TO ACHIEVE A 10 mm GAP WITH THE TOP OF THE PLATE WASHER. BURR THREADS ON ANCHOR BOLTS AFTER ASSEMBLY.
7. THE FIELD WELD CONNECTING THE GIRDER FLANGE TO THE SOLE PLATE SHALL BE ALLOWED TO COOL AFTER EACH PASS. IF THE SOLE PLATE IS IN DIRECT CONTACT WITH THE ELASTOMERIC BEARING DURING THE WELDING, THE TEMPERATURE OF THE SOLE PLATE STEEL ADJACENT TO THE ELASTOMER SHALL NOT EXCEED 93 DEGREES CELSIUS (200 DEGREES FARENHEIT). THE TEMPERATURE SHALL BE CONTROLLED BY WELDING PROCEDURES AND TEMPERATURE INDICATING CRAYONS OR OTHER DEVICES APPROVED BY THE ENGINEER.
8. PREFORMED PADS SHALL CONFORM TO AASHTO M251.

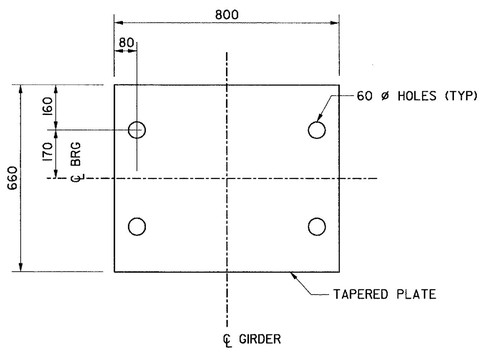

PIER 1
(4 TOTAL)

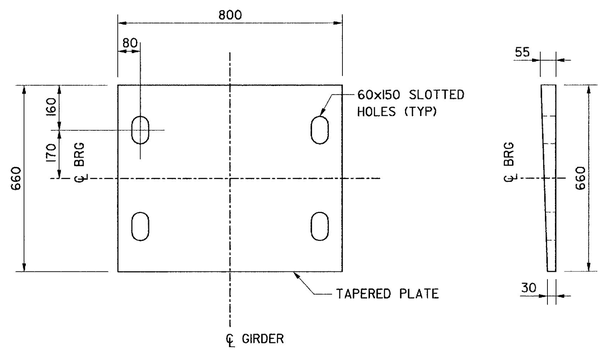

PIER 2
(4 TOTAL)

SOLE PLATE DETAILS

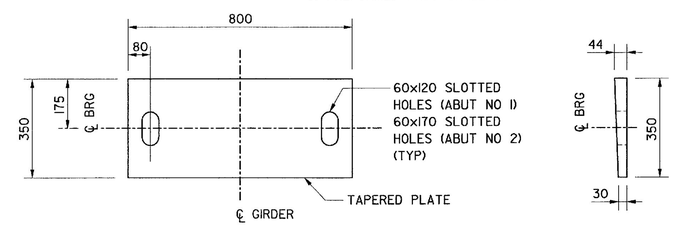

ABUTMENT 1 & 2
(8 TOTAL)

BEARING TABLE						
LOCATION	TYPE	ELASTOMERIC BEARING *		DESIGN PARAMETERS		
		N	H	DEAD LOAD (kN)	LIVE LOAD (kN)	ROTATION (RAD)
ABUT NO. 1	EXP.	7	121	355	496	0.01
PIER NO. 1	FIXED	8	137	1236	1030	0.01
PIER NO. 2	EXP.	12	201	1236	1030	0.01
ABUT NO. 2	EXP.	8	137	355	496	0.01

* SEE MASONRY PLATE DETAILS FOR PLAN DIMENSIONS.

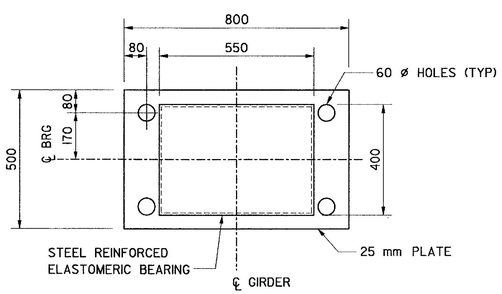

PIER 1
(4 TOTAL)

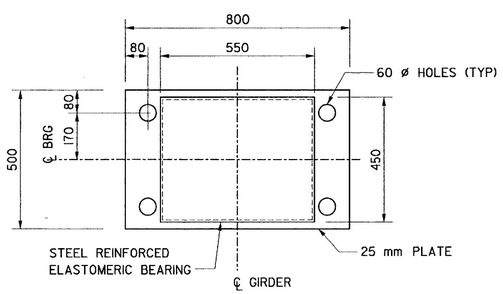

PIER 2
(4 TOTAL)

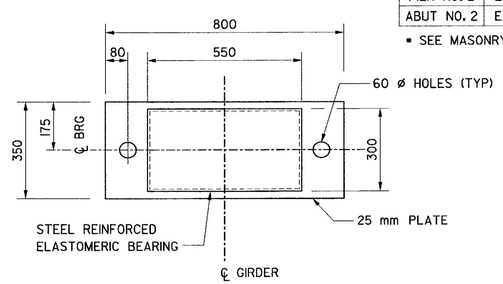

ABUTMENT 1 & 2
(8 TOTAL)

MASONRY PLATE DETAILS

PROJECT DESIGN ENGINEER	BY	DATE
DESIGN-DETAILED	S HODGDON	1/12/01
CHECKED	C GILLEY	1/12/01
REVISIONS	S JOHNSON	
FIELD CHANGES		

PLANS

BRIDGE NO. 3874

STATE OF MAINE
DEPARTMENT OF TRANSPORTATION

HIGHLAND AVENUE BRIDGE
OVER
MEDUXNEKEAG RIVER
IN THE TOWN OF
HOULTON
AROOSTOOK COUNTY

BEARING DETAILS

VANASSE HANGEN BRUSTLIN, INC.

 AUGUSTA, MAINE DECEMBER 2000

51075BG1.DGN

REINFORCING STEEL SCHEDULE

METRIC
1. All dimensions are in millimeters unless otherwise noted.
2. All elevations and stations are in meters.

F.H.W.A. REG. NO.	STATE	PROJECT NUMBER	SHEET NO.	TOTAL SHEETS
1	MAINE	BR-7630(00)X	20	21

STRAIGHT BARS

MARK	QTY.	LENGTH	LOCATION	MARK	QTY.	LENGTH	LOCATION
		ABUTMENT #1					
A1601	2	12 975	BACKWALL				
A1602	12	1550	BACKWALL				
A1603	18	1750	BACKWALL				
A1604	12	1800	BACKWALL				
A1605	4	10 100	SEAT				
A1606	8	1575	SEAT				
A1607	8	1800	SEAT				
A1608	20	900	BACKWALL				
A2501	4	4100	SEAT				
A3201	8	4100	SEAT				
		ABUTMENT #2					
A1621	2	13 825	BACKWALL				
A1622	12	1850	BACKWALL				
A1623	18	1750	BACKWALL				
A1624	12	1600	BACKWALL				
A1625	4	10 100	SEAT				
A1626	8	1575	SEAT				
A1627	8	1800	SEAT				
A1628	20	925	BACKWALL				
A2521	4	4100	SEAT				
A3221	8	4100	SEAT				
		PIER #1					
P1601	10	10 400	PIER CAP				
P1602	26	700	PIER CAP				
P1603	4	1900	PEDESTAL				
P1604	6	4100	PEDESTAL				
P1605	8	1100	PEDESTAL				
P2901	20	10 400	PIER CAP				
		PIER #2					
P1601	10	10 400	PIER CAP				
P1602	26	700	PIER CAP				
P1603	4	1900	PEDESTAL				
P1604	6	4100	PEDESTAL				
P1605	8	1100	PEDESTAL				
P2901	20	10 400	PIER CAP				
		RETAINING WALL					
RW1601	33	2350	FOOTING				
RW1602	46	10 050	FOOTING & WALL				
RW1603	33	1925	FOOTING				
RW1604	66	3100	WALL				
RW1605	8	1200	WALL				
RW2201	33	2350	FOOTING				
		SUPERSTRUCTURE					
S1601	708	11 500	TRANSVERSE				
S1602	12	2875	HAUNCH				
S1603	8	1225	HAUNCH				
S1901	66	14 500	LONGITUDINAL				
S1902	564	16 000	LONGITUDINAL				
S1903	94	13 075	LONGITUDINAL				
S1904	66	5600	LONGITUDINAL				
MARK	QTY.	LENGTH	LOCATION	MARK	QTY.	LENGTH	LOCATION

BENT BARS

MARK	QTY.	LENGTH	TYPE	A	B	C	D	E	F	G	H	O	R	LOCATION
		ABUTMENT #1												
A1651	2	2400	V				875	1525			680			BACKWALL
A1652	2	4300	V				2350	1950			1070			BACKWALL
A1653	3	2350	PA	750	1200	400	850							SEAT
A1654	3	2550	PA	750	1200	600	850							SEAT
A1655	29	1700	U		725	250	725							BACKWALL
A1656	9	1850	U		600	650	600							SEAT
A1657	9	3850	U		1600	650	1600							SEAT
A1658	24	2200	U		825	550	825							SEAT
A1659	8	1950	U		650	650	650							SEAT
A1660	4	3350	U		650	2050	650							SEAT
		ABUTMENT #2												
A1671	2	2300	V				1575	725			320			BACKWALL
A1672	2	4175	V				2350	1825			840			BACKWALL
A1673	3	2450	PA	825	1200	425	850							SEAT
A1674	3	2600	PA	750	1200	650	850							SEAT
A1675	29	1800	U		775	250	775							BACKWALL
A1676	9	1700	U		600	500	600							SEAT
A1677	9	3800	U		1650	500	1650							SEAT
A1678	24	2100	U		850	400	850							SEAT
A1679	8	1800	U		650	500	650							SEAT
A1680	4	3350	U		650	2050	650							SEAT
		PIER #1												
P1650	45	4105	SD	140	1200	1425	1200			140				PIER CAP
P1651	21	3155	SD	140	1200	475	1200			140				PIER CAP
P1652	36	2025	U		300	1425	300							PIER CAP
P1653	8	3100	U		1000	1100	1000							PEDESTAL
P1654	18	2500	U		700	1100	700							PEDESTAL
P1655	4	1300	L		300	1000								PEDESTAL
P1656	12	1000	L		300	700								PEDESTAL
		PIER #2												
P1650	45	4105	SD	140	1200	1425	1200			140				PIER CAP
P1651	21	3155	SD	140	1200	475	1200			140				PIER CAP
P1652	36	2025	U		300	1425	300							PIER CAP
P1653	8	3100	U		1000	1100	1000							PEDESTAL
P1654	18	2500	U		700	1100	700							PEDESTAL
P1655	4	1300	L		300	1000								PEDESTAL
P1656	12	1000	L		300	700								PEDESTAL
		RETAINING WALL												
RW2251	33	2300	L	1925	375									FOOTING
		SUPERSTRUCTURE												
S1650	350	6640	B		1400	220	1290	1400	1890		1155	6445		TRANSVERSE
S1651	350	5840	B		600	220	1290	1400	1890		1155	5645		TRANSVERSE
S1652	710	2575	C	175	2400					0				TRANSVERSE
S1653	487	1770	S	250	460	350	460			250				CURB
S1654	487	1910	S	250	530	350	530			250				SIDEWALK
S1655	355	3690	S	250	530	2200	460			250				SIDEWALK
S1656	27	2335	W	930	350	450	280	325			200			HAUNCH
S1657	27	2180	W	850	350	375	280	325			200			HAUNCH
S1951	20	2810	H	205	375	825	375	825		205				TRANSITION BARRIER
S1952	8	2550	H	205	245	825	245	825		205				TRANSITION BARRIER
S2250	30	2510	U		1000	510	1000							LIGHT BASE
S2251	9	3000	VA	1200	600					1200	1850			LIGHT BASE
MARK	QTY.	LENGTH	TYPE	A	B	C	D	E	F	G	H	O	R	LOCATION

TYPE - BENDING DIAGRAMS

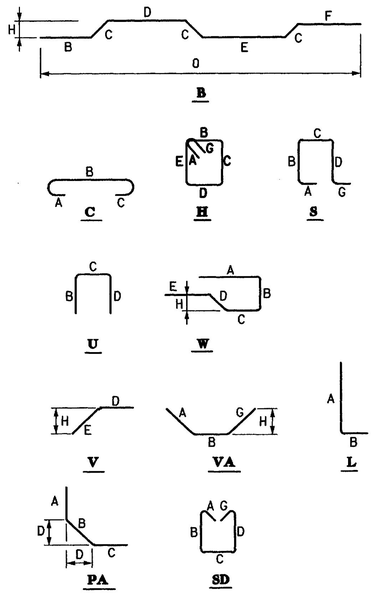

All dimensions are out-to-out of bar.

Bending details and hooks shall conform to the recommendations of the current revision of ACI Standard 318.

Reinforcing Bar: ASTM A615/A615M, Grade 420

GENERAL NOTES

1. The first two digits following the letter(s) of the mark indicate the size of the bar:

   Mark 'A1602' = bar size #16
   Mark 'P2501' = bar size #25
   Mark 'S1950' = bar size #19

2. Each crank bar, Type B, may be replaced by two (2) straight bars (one top and one bottom) of the same bar size as the crank bar. Payment in either case shall be based on crank bars as schedule on the plans.

PROJECT DESIGN ENGINEER	BY	DATE
DESIGN-DETAILED	S HODGDON	1/12/01
CHECKED	C OLLEY	1/12/01
REVISIONS	S JOHNSON	
FIELD CHANGES		

PLANS

BRIDGE NO. 3874

STATE OF MAINE
DEPARTMENT OF TRANSPORTATION

HIGHLAND AVENUE BRIDGE
OVER
MEDUXNEKEAG RIVER
IN THE TOWN OF
HOULTON
AROOSTOOK COUNTY

REINFORCING STEEL SCHEDULE

VANASSE HANGEN BRUSTLIN, INC.

51075RS1.DGN

ITEM	TECH	CHECKED	REVISIONS			
			NO.	DATE	DESCRIPTION	BY
BASE MAP	D.S.G.					
EXIST. R/W	D.S.G.					
PROP. LINES	T.L.B.					
AREAS	D.S.G.	T.L.B.				

METRIC	F.H.W.A. REG. NO.	STATE	PROJECT NUMBER	SHEET NO.	TOTAL SHEETS
	1	MAINE	----------	001	21-A

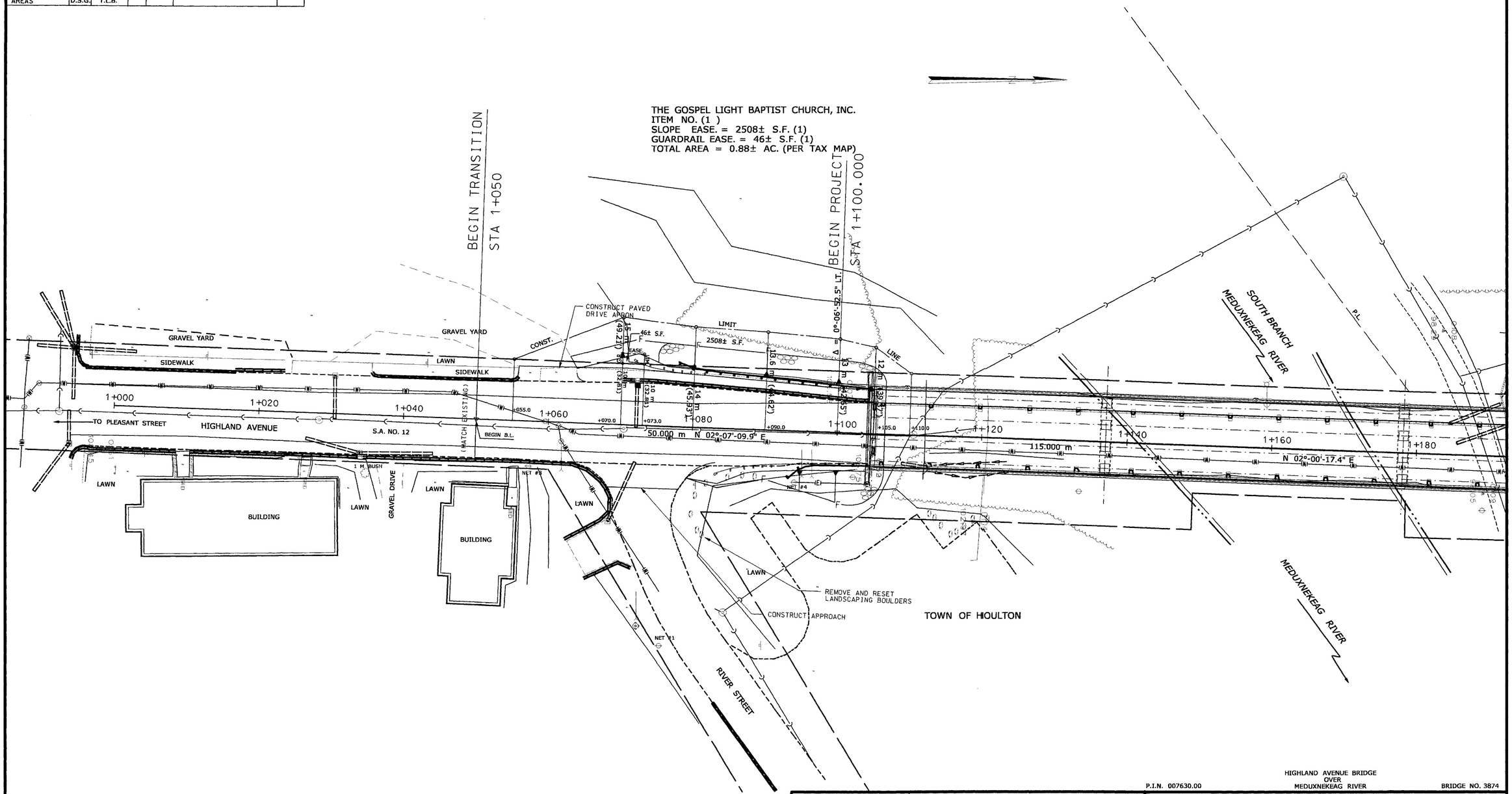

EXISTING R/W

HIGHLAND AVE.
4 RODS (NORTH OF BRIDGE)
3 RODS (SOUTH OF BRIDGE)
PER TOWN AND SURVEY PLANS IN AREA
SEE PLAN BK. 5 PG. 58
PLAN BK. 35 PG. 18
PLAN BK. 21 PG. 27A & B

RIVER STREET
3 RODS PER TOWN
SEE PLAN BK. 21 PG. 27A & B

PLAN FILED IN PLAN BOOK PAGE

NO.	GRANTOR	COUNTY RECORD INSTRUMENT	DATE	BOOK	PAGE
		COND	12/04/2000	3461	291

SYMBOLS

- IP (IRON PIPE or PIN)
- S.T. (SEPTIC TANK)
- WATER LINE
- GAS LINE
- ELECTRIC LINE
- TELEPHONE LINE
- SEWER LINE
- PROPERTY LINE
- LIMITS OF WROUGHT PORTION
- EXISTING RIGHT OF WAY
- NEW RIGHT OF WAY
- NEW RIGHT OF WAY WITHIN EXISTING RIGHT OF WAY
- CONTROL OF ACCESS

○ - RAILROAD SPIKE △ - CONTROL MONUMENTS

MAINE DEPARTMENT OF TRANSPORTATION - CENTERLINE CONTROL

MAINE STATE COORDINATE SYSTEM - ZONE

CENTERLINE CONTROL MONUMENTS			TRAVERSE CONTROL POINTS		
STATION	NORTH	EAST	NUMBER	NORTH	EAST

P.I.N. 007630.00

HIGHLAND AVENUE BRIDGE OVER MEDUXNEKEAG RIVER

BRIDGE NO. 3874

STATE OF MAINE
DEPARTMENT OF TRANSPORTATION
RIGHT OF WAY MAP

STATE AID HIGHWAY NO. 12

HOULTON AROOSTOOK COUNTY

FEDERAL AID PROJECT NO. BR-7630(00)X

DATE: SEPTEMBER 2000

SCALE: 1 = 250

SHEET NO. 1 OF 2 SHEETS

D.O.T. FILE NO. 2-468

JOHN G. MELROSE
COMMISSIONER

JOHN E. DORITY
CHIEF ENGINEER

ITEM	TECH	CHECKED	REVISIONS			
BASE MAP	D.S.G.		NO.	DATE	DESCRIPTION	BY
EXIST. R/W	D.S.G.					
PROP. LINES	T.L.B.					
AREAS	D.S.G.	T.L.B.				

METRIC	F.H.W.A. REG. NO.	STATE	PROJECT NUMBER	SHEET NO.	TOTAL SHEETS
	1	MAINE	----------	cel	21-8

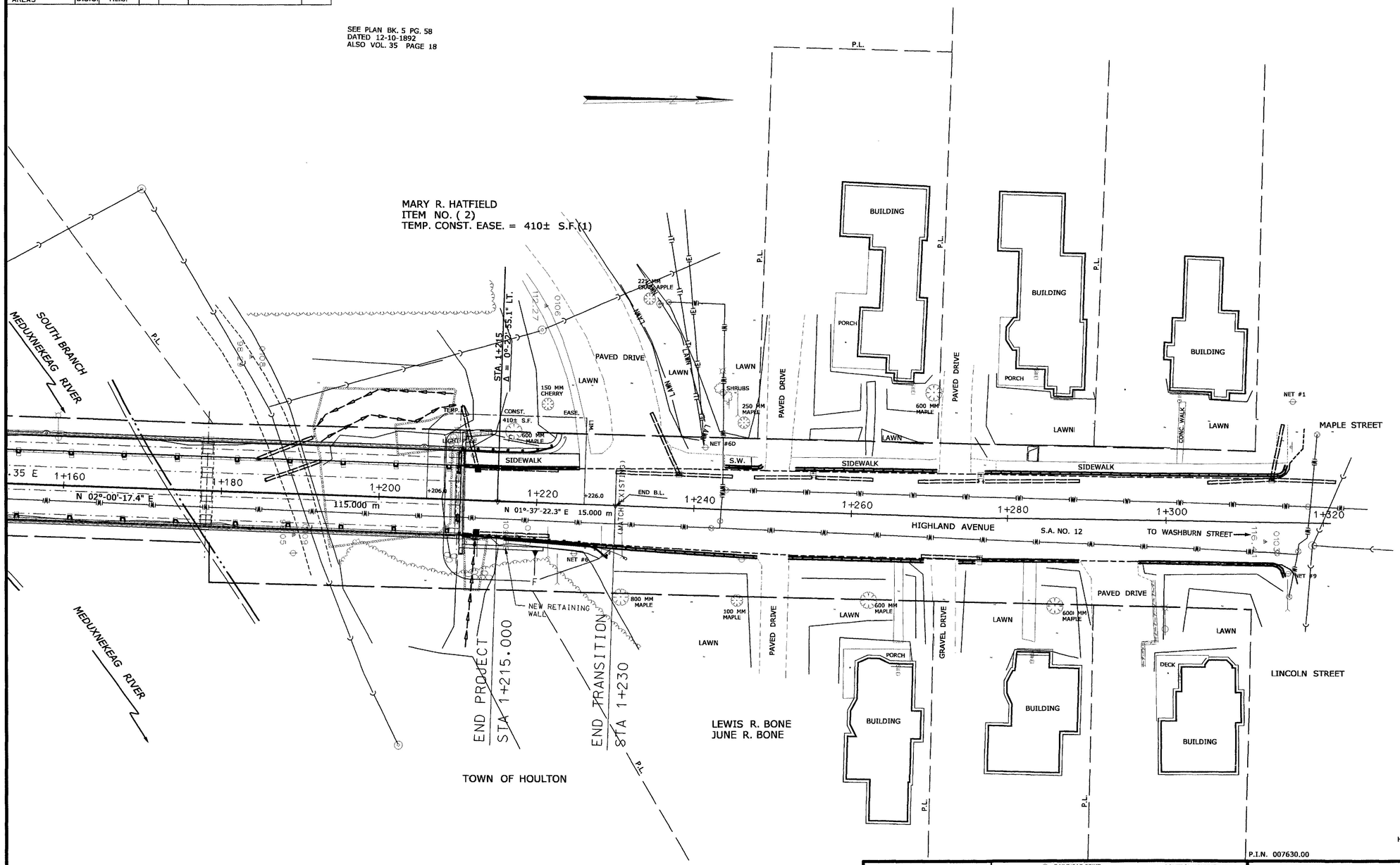

P.I.N. 007630.00

HIGHLAND AVENUE BRIDGE
OVER
MEDUXNEKEAG RIVER

BRIDGE NO. 3874

EXISTING R/W

HIGHLAND AVE.
4 RODS (NORTH OF BRIDGE)
3 RODS (SOUTH OF BRIDGE)
PER TOWN AND SURVEY PLANS IN AREA
SEE PLAN BK. 5 PG. 58
PLAN BK. 35 PG. 18
PLAN BK. 21 PG. 27A & B

RIVER STREET
3 RODS PER TOWN
SEE PLAN BK. 21 PG. 27A & B

PLAN FILED IN PLAN BOOK PAGE					
		COUNTY RECORD			
NO.	GRANTOR	INSTRUMENT	DATE	BOOK	PAGE
		COND.	12/04/2000	3461	291

SYMBOLS

- IP (IRON PIPE or PIN)
- S.T. (SEPTIC TANK)
- WATER LINE
- GAS LINE
- ELECTRIC LINE
- TELEPHONE LINE
- SEWER LINE
- PROPERTY LINE
- LIMITS OF WROUGHT PORTION
- EXISTING RIGHT OF WAY
- NEW RIGHT OF WAY
- NEW RIGHT OF WAY WITHIN EXISTING RIGHT OF WAY
- CONTROL OF ACCESS

○ - RAILROAD SPIKE △ - CONTROL MONUMENTS

MAINE DEPARTMENT OF TRANSPORTATION - CENTERLINE CONTROL

MAINE STATE COORDINATE SYSTEM - ZONE

CENTERLINE CONTROL MONUMENTS			TRAVERSE CONTROL POINTS		
STATION	NORTH	EAST	NUMBER	NORTH	EAST

STATE OF MAINE

DEPARTMENT OF TRANSPORTATION
RIGHT OF WAY MAP

STATE AID HIGHWAY NO. 12

HOULTON AROOSTOOK COUNTY

FEDERAL AID PROJECT NO. BR-7630(00)X

DATE: SEPTEMBER 2000

SCALE: 1 = 250

SHEET NO. 2 OF 2 SHEETS

D.O.T. FILE NO. 2 - 468

JOHN G. MELROSE
COMMISSIONER

JOHN E. DORITY CHIEF ENGINEER