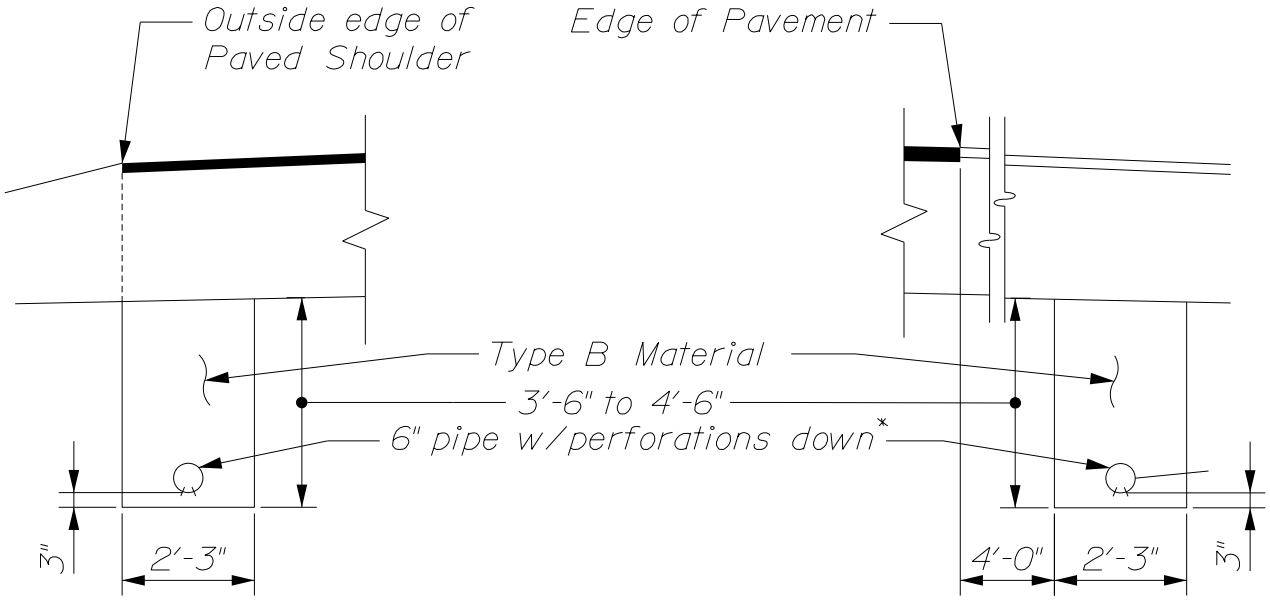

~ TYPE "B" PAVED SHOULDER ~

~ TYPE "B" GRAVEL SHOULDER ~

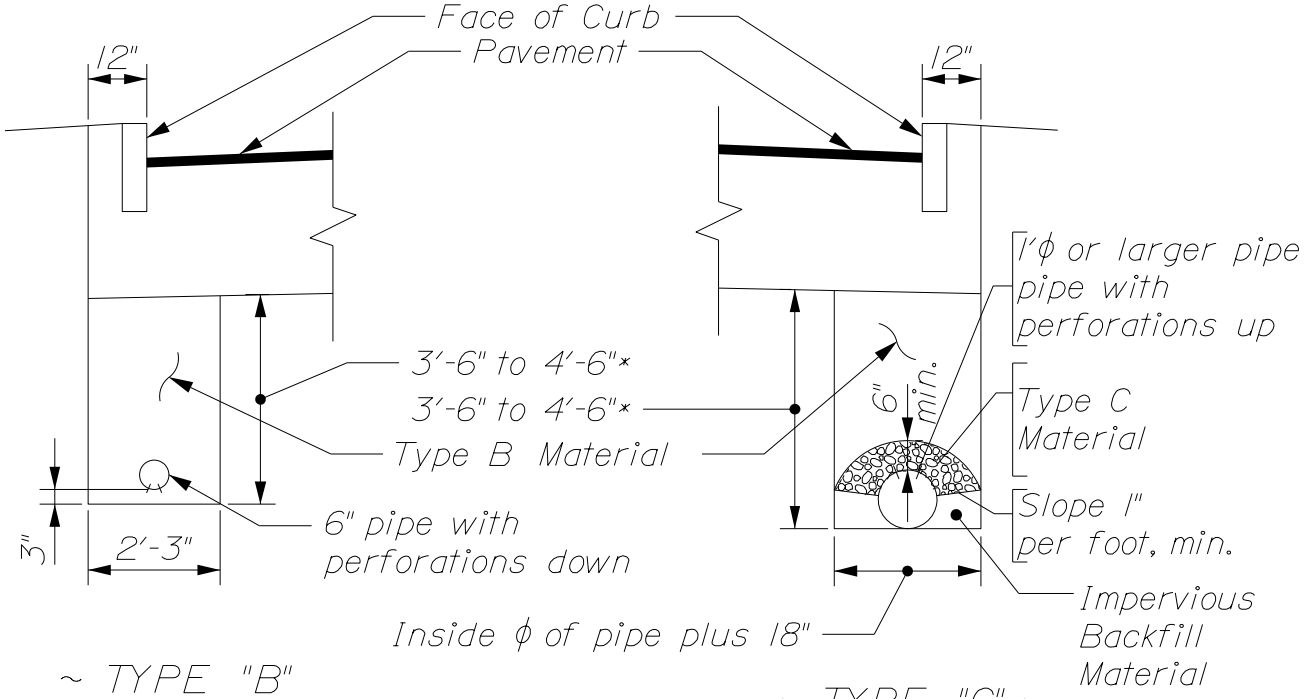

~ TYPE "B" CURBED SHOULDER ~

~ TYPE "C" ~

*Unless otherwise shown on the plans

UNDERDRAIN

605(01)

Revised June 16, 2022