DIVISION 600

MISCELLANEOUS CONSTRUCTION

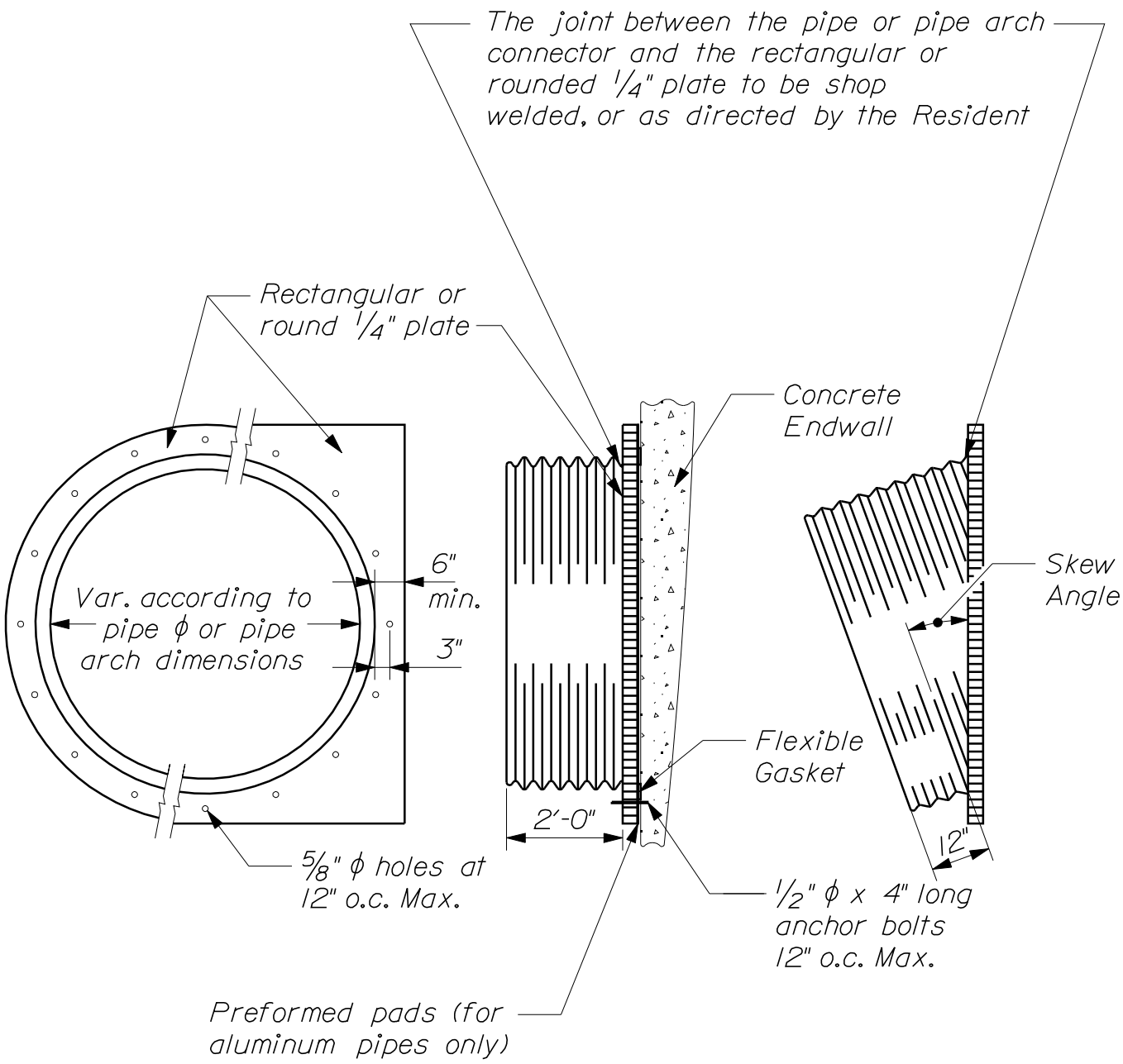

~ METAL CULVERT CONNECTOR ~

~ CONNECTOR FOR SKEWED PIPE ~

CONCRETE BOX CULVERT EXTENSION USING CORRUGATED METAL PIPE & PIPE ARCHES

603(01)

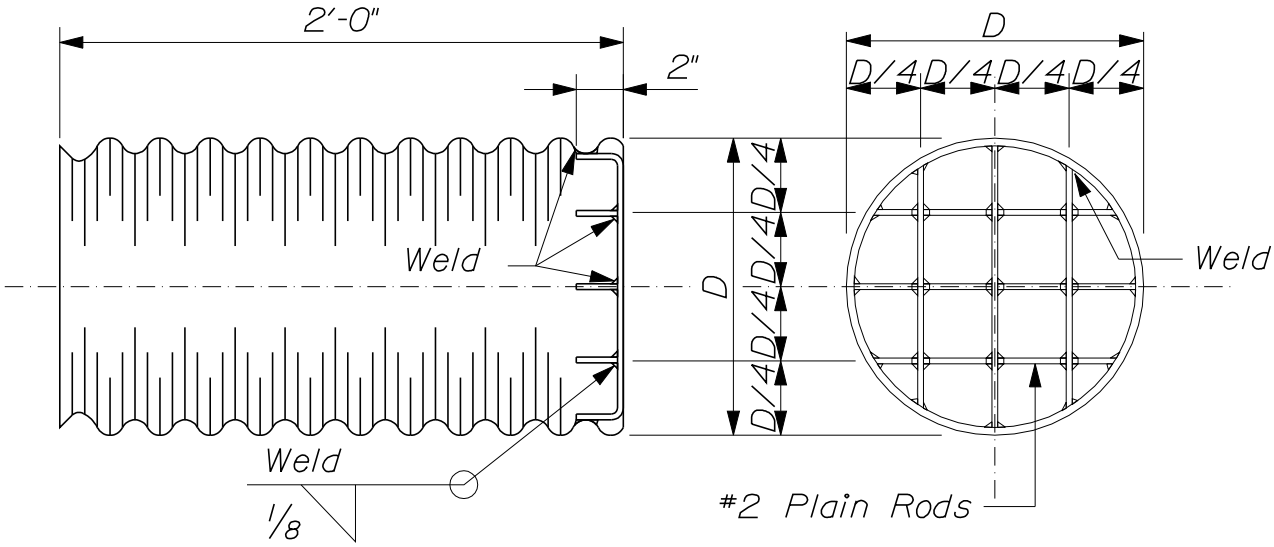

~ INLET GRATE UNIT ~

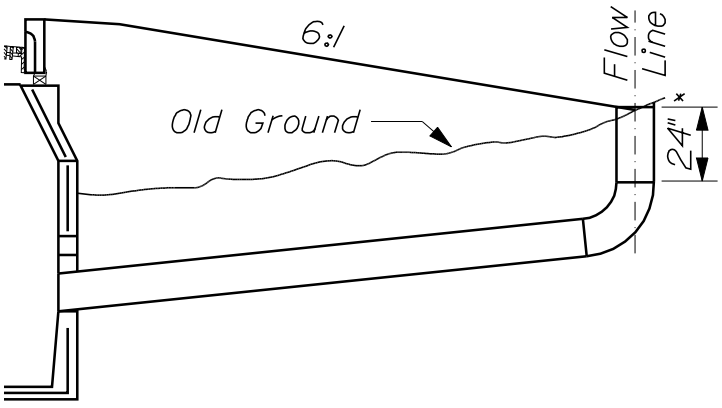

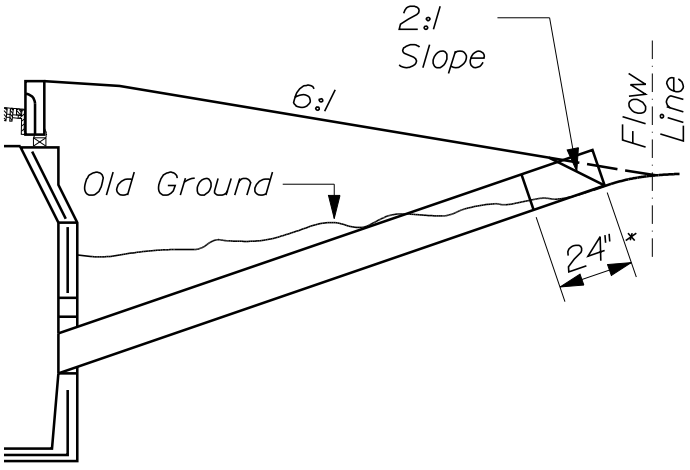

NOTES:

1. All units to be complete shop assembly.
2. All units to have one shop coat of approved aluminum paint.
3. An elbow shall be installed if directed by the Resident to provide a horizontal grate, it shall be paid for as 3 additional feet of the type and size of pipe involved. (In addition to the length measured through the elbow which shall be measured along the top of the pipe.)
4. Rods shall conform to the requirements of Section 709.01 of the Standard Specifications.
5. Pipe for inlet grate unit shall be the same type that is used to connect into the catch basin.

* 24" Inlet Grate Unit.

~ INLET UNITS IN FILL AREAS ~

INLETS

603(02)

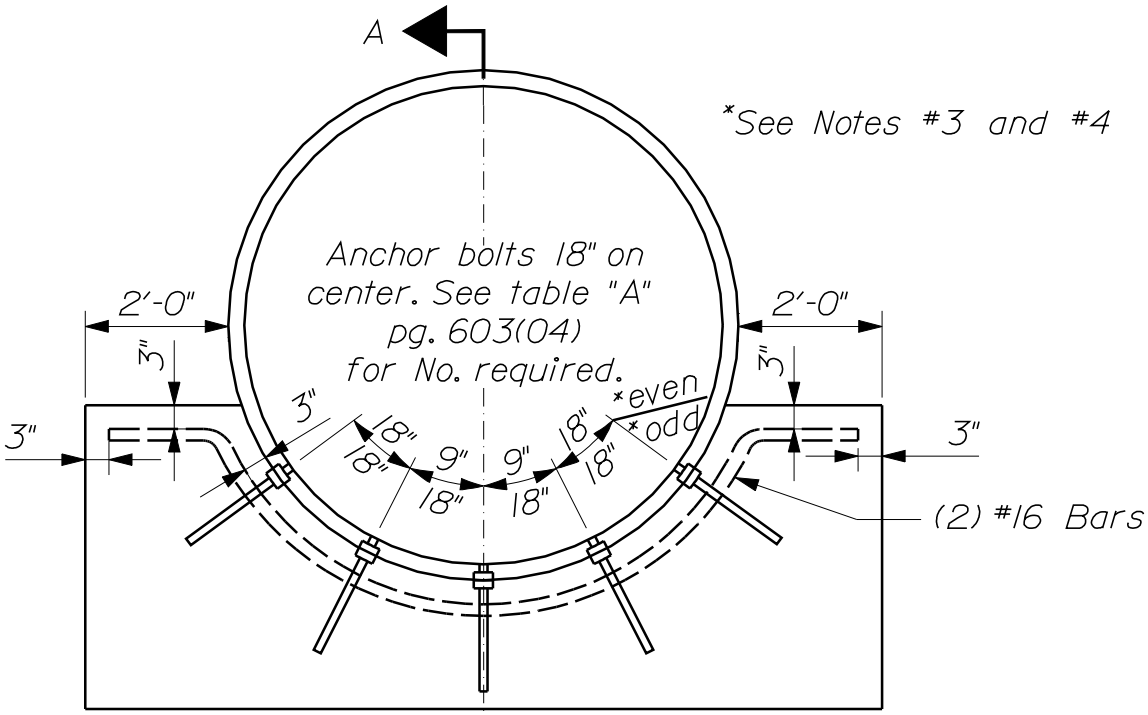

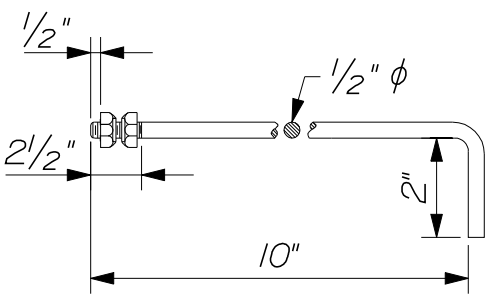

~ ANCHOR BOLT FOR CORRUGATED PIPES ~

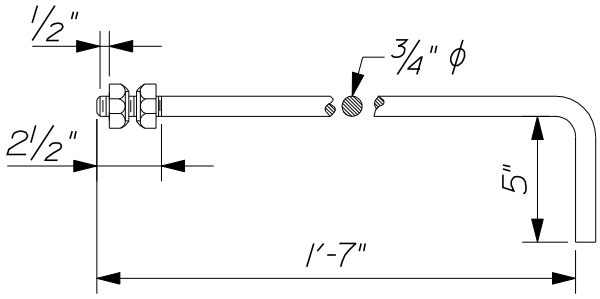

~ ANCHOR BOLT FOR STRUCTURAL PLATE PIPES ~

NOTES:

1. For corrugated pipe, anchor bolt shall be placed in the second valley.
2. See Table "A" for "X" dimension.
3. For pipes with an even number of bolts no bolt shall be placed on CL, & x Dimension shall be split and measured from CL for initial bolt placement. The X dimension shall then be measured from the CL of the established bolt holes.
4. Pipes with an odd number of bolts shall have the first bolt placed on bottom @ CL & X dimension shall be measured from CL for all other bolt placements.

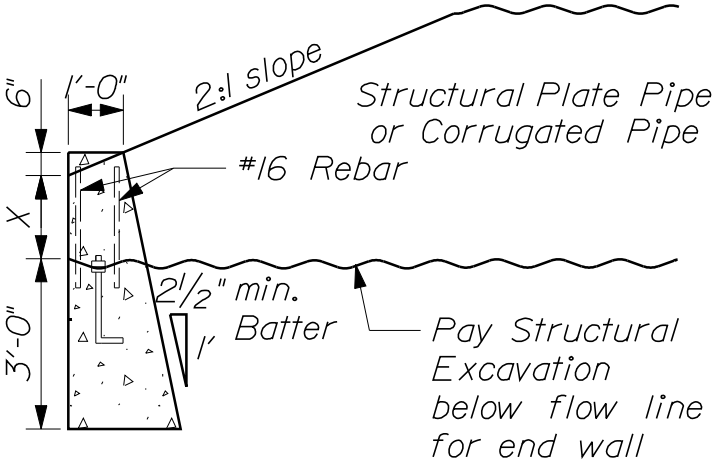

~ SECTION A-A ~

CONCRETE INLET ENDWALL

603(03)

TABLE A

CORRUGATED PIPES		
PIPE I.D.	NO. OF BOLTS REQUIRED	"X" DIMENSION
60"	4	1'-6"
66"	4	1'-6"
72"	4	1'-6"
78"	5	1'-6"
84"	5	1'-6"
STRUCTURAL PLATE PIPE		
PIPE I.D.	NO. OF BOLTS REQUIRED	"X" DIMENSION
72"	4	1'-6"
78"	5	1'-7 1/2"
84"	5	1'-9"
90"	5	1'-10 1/2
96"	6	2'-0"
102"	6	2'-1 1/2"
108"	6	2'-3"
114"	7	2'-4 1/2"
120"	7	2'-6"
126"	7	2'-7 1/2"
132"	8	2'-9"
138"	8	2'-10 1/2"
144"	9	3'-0"
150"	9	3-1 1/2"
156"	9	3-3"
162"	10	3'-4 1/2"
168"	10	3'-6"
174"	10	3'-7 1/2"
180"	11	3'-9"

NOTES:

1. Culverts installed under 2:1 slopes shall have Riprap laid on 2:1 slope with no ditch transitions.

2. Excavation required to grade culvert inlets and outlets as shown will not be paid separately, but will be incidental to the culvert.

3. Anchor bolts will be incidental to the concrete items.

4. Concrete endwall shall be structural concrete class "A" and shall be paid for as Item 502.32 or Item 502.329, Structural Concrete Culvert Endwall. Reinforcing steel will not be paid for separately but will be considered incidental to Item 502.32 or Item 502.329.

5. Standard galvanized carriage or machine bolts 1/2" x 1' long or 3/4" x 2' long with minimum 2 1/2" thread may be furnished in place of anchor bolts. Washers shall be furnished at the head of each bolt.

6. Bolt material shall conform to ASTM F568 Class 4.6. Nuts shall conform to ASTM A563M. Bolts, nuts, and washers shall be hot dip galvanized after fabrication to meet ASTM A153.

CONCRETE INLET ENDWALL

603(04)

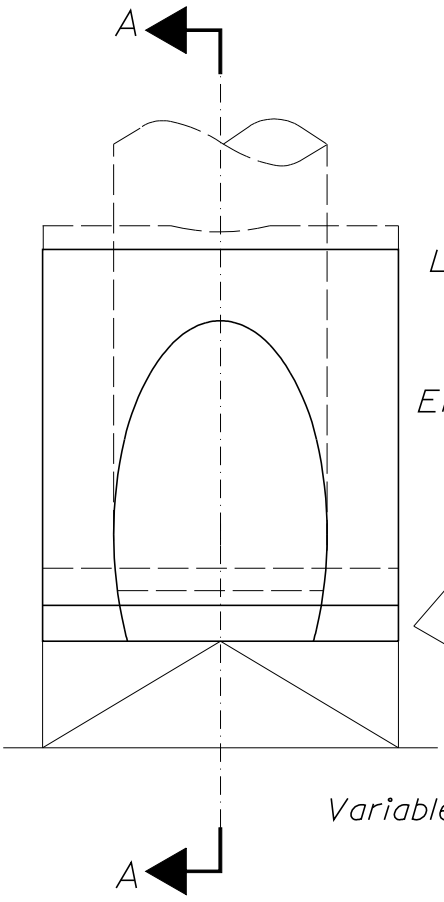

~ PLAN VIEW ~

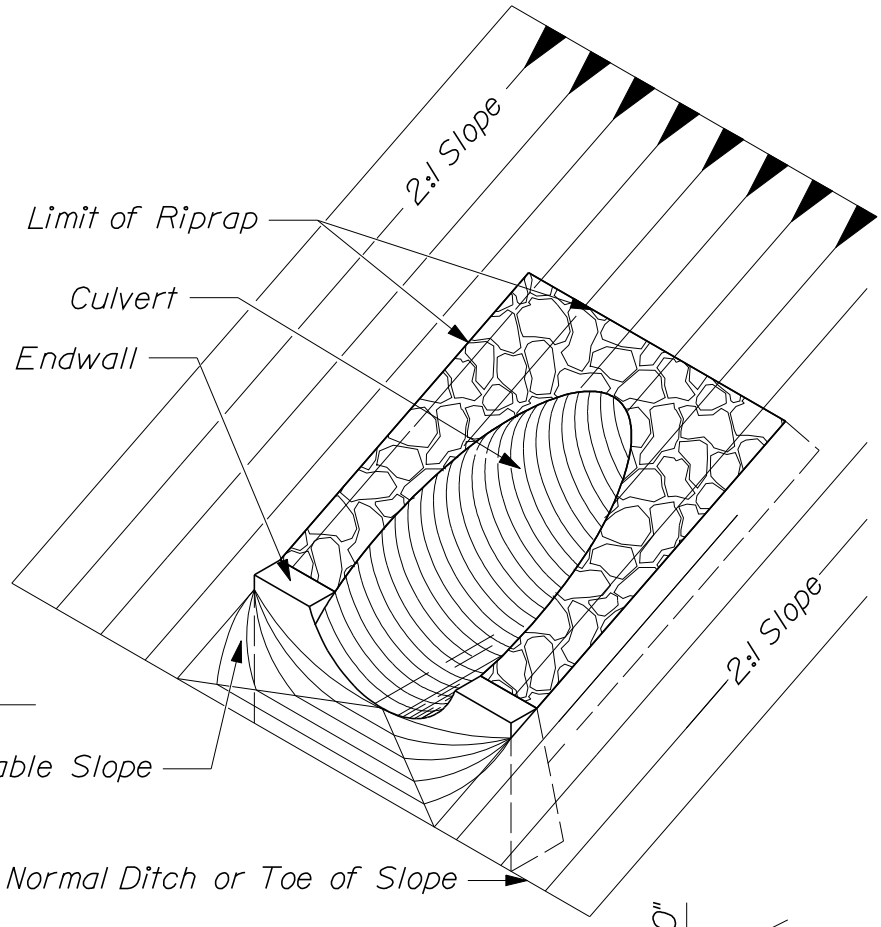

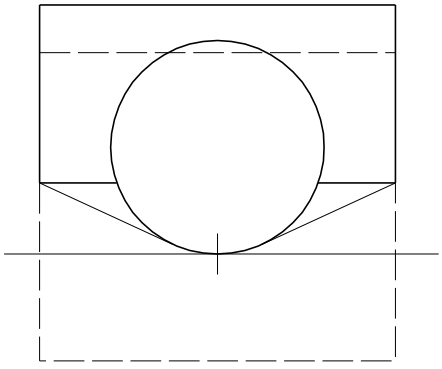

~ END VIEW ~

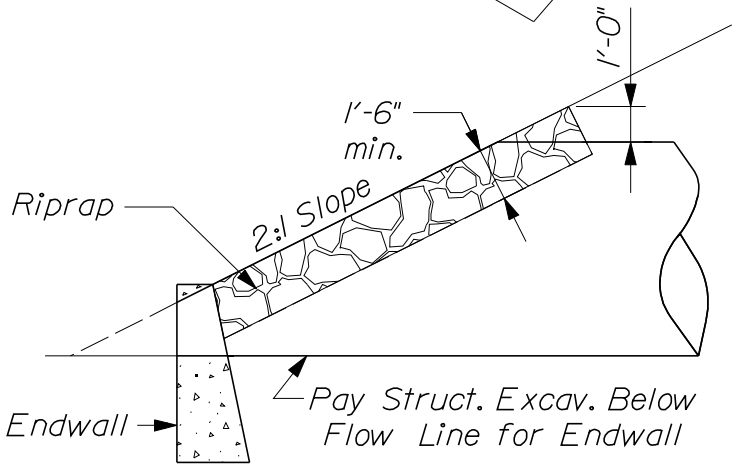

~ SECTION A-A ~

CONCRETE INLET ENDWALLS FOR RIVETED AND STRUCTURAL PLATE PIPES 60" TO 180" IN 2:1 SLOPES

603(05)

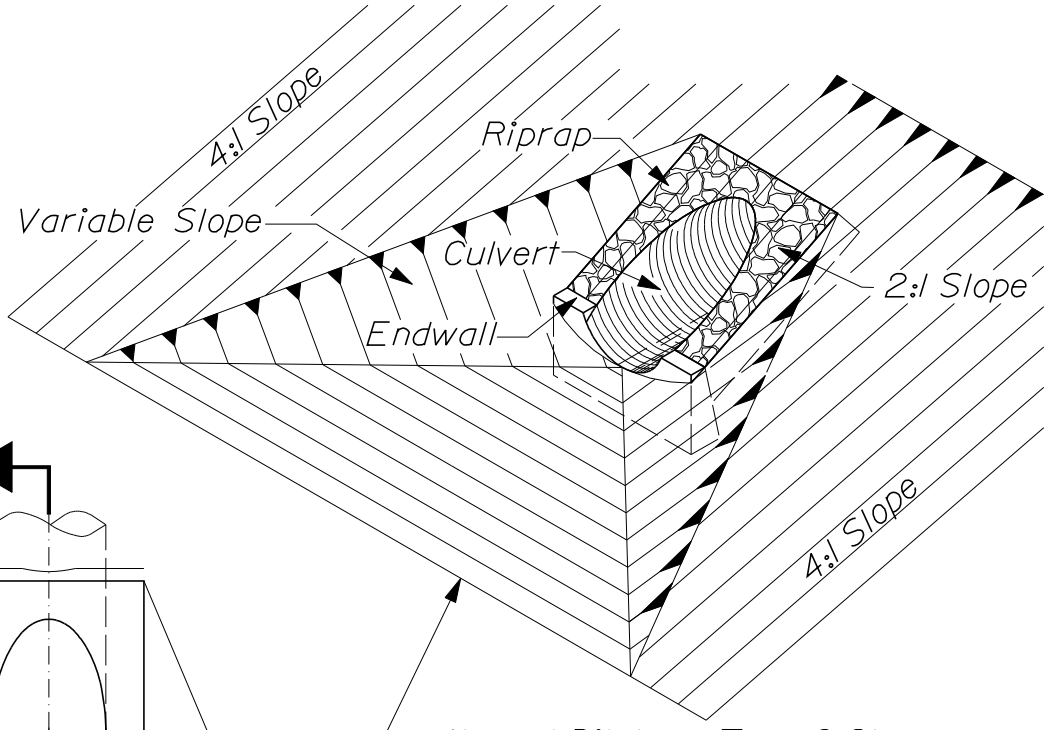

~ ISOMETRIC VIEW ~

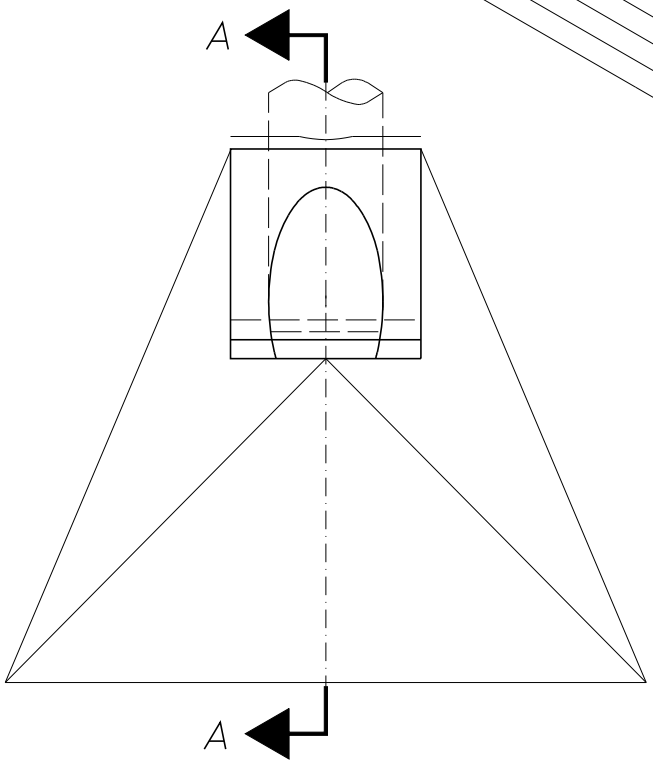

~ PLAN VIEW ~

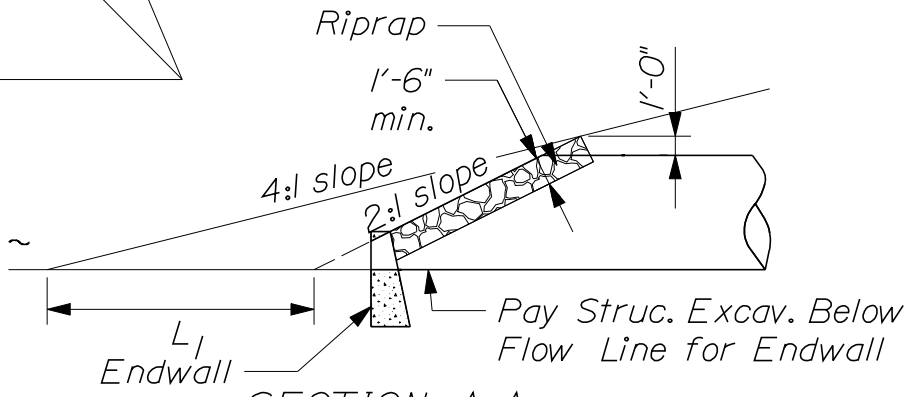

~ SECTION A-A ~

Note: $L_1 = L_2$

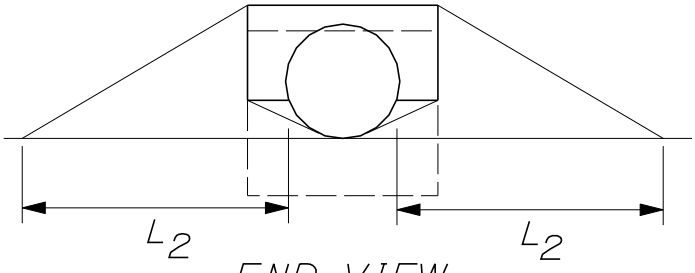

~ END VIEW ~

CONCRETE INLET ENDWALLS FOR RIVETED AND STRUCTURAL PLATE PIPES 60" TO 180" IN 4:1 SLOPES

603(06)

CULVERT PIPE

603(09)

CIRCULAR CULVERT PIPE (NOMINAL WALL THICKNESS IN INCHES EXCEPT M294 PIPE)											
DIAMETER	CORRUGATED METAL PIPE				SPIRAL RIB (TYPE IR)(B)		PLASTIC PIPE		REINFORCED CONCRETE PIPE		
	OPTION I		OPTION I/III		OPTION I	OPTION I/III	OPTION I / III	OPTION III	OPTION I/III		
	M218	M274 (A)	M246	M197	M274 (A)	M197	M294 DUAL-WALL PIPE STIFFNESS KPa @5% DEFL.	M278 PIPE STIFFNESS KPa	M170 CLASS III WALL A	M170 CLASS III WALL B	M170 CLASS III WALL C
12"	0.079	0.064	0.064	0.075			345	320	1 3/4	2	2 3/4
15"	0.079	0.064	0.064	0.075			290	320	1 7/8	2 1/4	3
18"	0.109	0.079	0.079	0.075	0.079	0.106	275		2	2 1/2	3 1/4
21"	0.109	0.079	0.079	0.075	0.079	0.106	260		2 1/4	2 3/4	3 1/2
24"	0.109	0.079	0.079	0.075	0.079	0.106	235		2 1/2	3	3 3/4
27"	0.109	0.079	0.079	0.105			205		2 5/8	3 1/4	4
30"	0.109	0.079	0.079	0.105	0.110	0.134	195		2 3/4	3 1/2	4 1/4
33"	0.109	0.079	0.079	0.105					2 7/8	3 3/4	4 1/2
36"	0.109	0.079	0.079		0.110	0.134	150		3	4	4 3/4
36" (1)			0.079	0.075							
42"	0.138	0.109	0.109				140		3 1/2	4 1/2	5 1/4
42" (1)			0.079	0.105	0.110						
48"	0.138	0.109	0.109				125		4	5	5 3/4
48" (1)			0.079	0.105	0.110						
54"	0.168	0.138	0.138				110		4 1/2	5 1/2	6 1/4
54" (1)			0.079	0.105	0.110						
60"	0.168	0.138	0.138				95		5	6	6 3/4
60"(1)			0.079	0.105	0.110						
66" (1)			0.079	0.135					5 1/2	6 1/2	7 1/4
72" (1)			0.109	0.135					6	7	7 3/4
78" (1)			0.109	0.164						7 1/2	8 1/4
84" (1)			0.109	0.164						8	8 3/4

Metal Pipe values are for 2-2/3" x 1/2" Corrugations unless diameter is followed by (1) which requires 3" x 1" Corrugations for Aluminum Pipes and 3" x 1" or 5" x 1" Corrugations for Steel Pipes.
Option I Pipes shall only be used for entrances.
Fill heights over 15' may require larger metal gages.

M218 = zinc coated (galvanized) corrugated steel pipe
M274 = aluminum coated (type 2) corrugated steel pipe
M246 = polymer pre-coated galvanized corrugated steel pipe

(A) Option I, M274 can be used for closed drainage Option III Pipe
(B) Spiral Rib Type IR can be used for Smoothlined Pipe

M197 = Corrugated Aluminum Alloy Pipe
M278 = Polyvinyl Chloride Pipe PVC
M170 = Reinforced Concrete Pipe
M294 = High Density Polyethylene Pipe

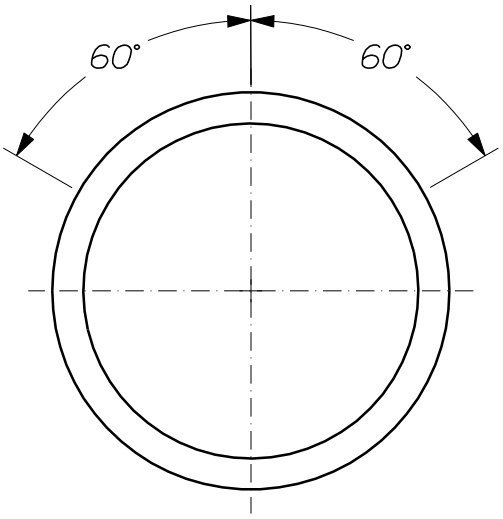

~ PLACEMENT OF ANCHORS ~

Anchors shall be installed as shown on figure above at 60° down from Top Dead Center (TDC) to the nearest inch measured from the outside. For pipe diameters not listed below, divide the OD by 6.

Holes for anchors shall be drilled larger than the anchor bolt diameter specified in the table below to allow for anchoring materials.

ANCHOR PLACEMENT TABLE	
18" ϕ Pipes	60° from TDC = 12"
24" ϕ Pipes	60° from TDC = 15"
30" ϕ Pipes	60° from TDC = 19"
36" ϕ Pipes	60° from TDC = 22"

NOTES:

1. For new concrete pipe or pipe designated to be removed and reset, ties shall be used at all pipe inlets and outlets as specified in the construction notes.

2. Ties shall be used only to hold pipe sections laterally together, not for pulling the pipe section together.

3. Tie rods and connections shall be placed on the outside of all pipe sections unless otherwise directed.

4. Tie rod shall be galvanized steel, including all hardware required. Any welded areas shall be treated with an approved galvanized paint. All welding shall meet current MaineDOT Specifications. Steel shall conform to ASTM A 307 or equivalent.

CONCRETE PIPE TIES

603(10)

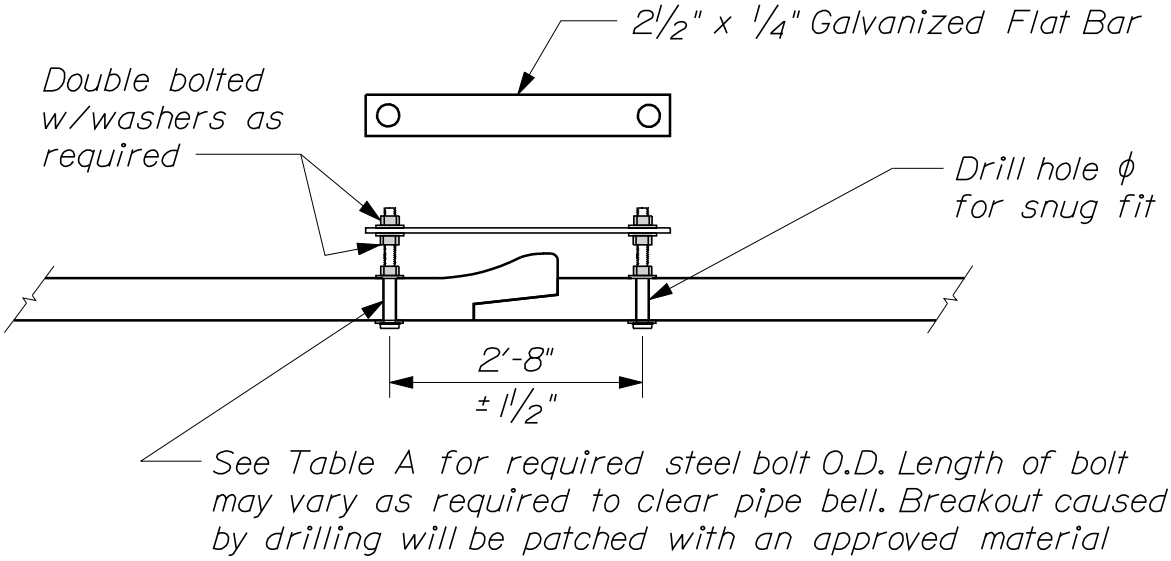

~ GALVANIZED BOLTED ANCHOR W/GALVANIZED FLATBAR CONNECTION ~

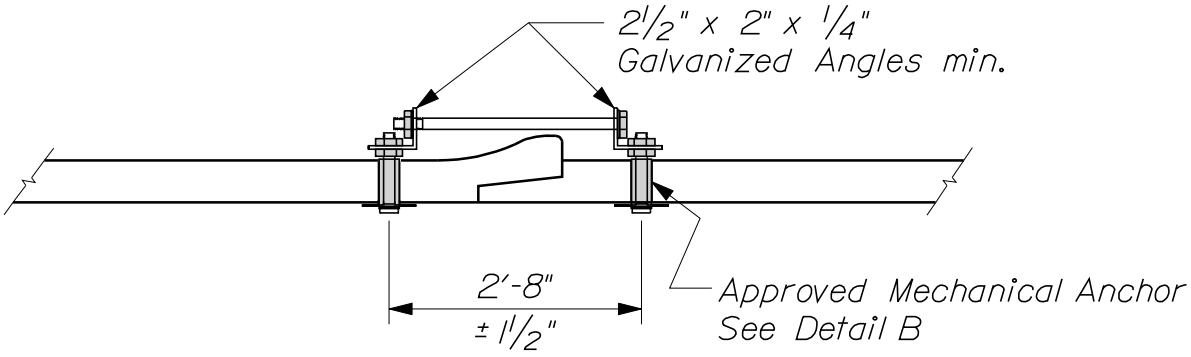

~ MECHANICAL ANCHOR W/ GALVANIZED PLATE CORE DRILL HOLES ~

TABLE A	
PIPE SIZE (I.D.)	BOLT THREAD ϕ
12" - 26" I.D.	⅝"
27" - 66" I.D.	¾"
67" - 132" I.D.	1"

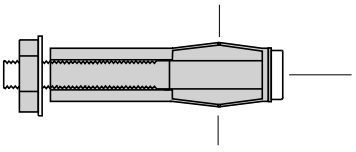

Compression/Expansion Type Mechanical Anchor

~ DETAIL B ~

CONCRETE PIPE TIES

603(11)

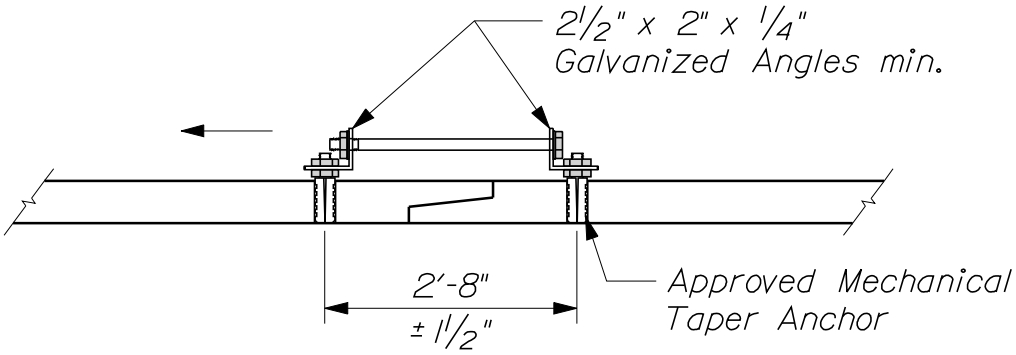

~ MECHANICAL ANCHOR W/GALVANIZED ANGLE PLATE ~

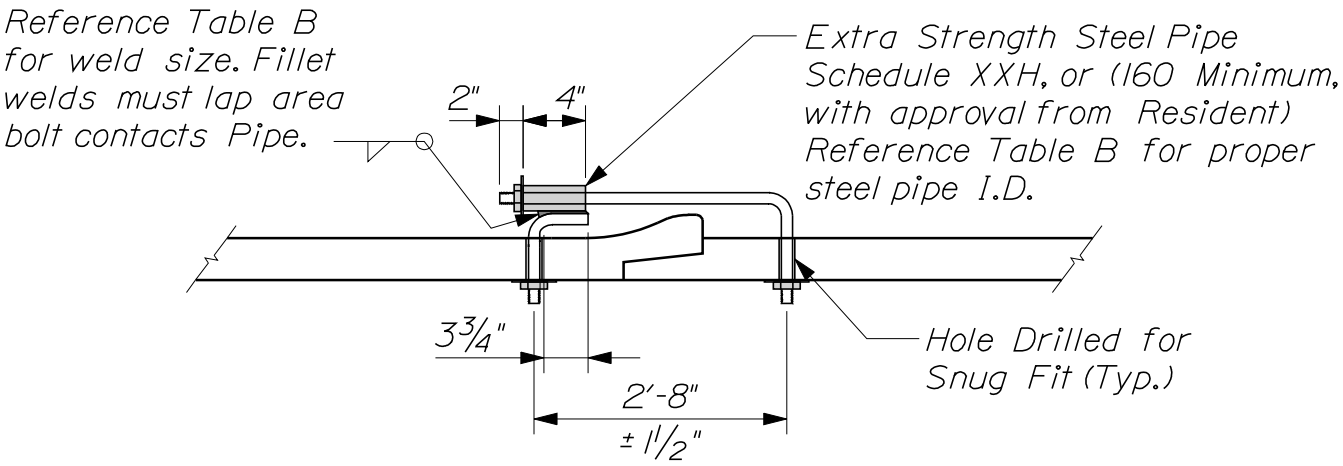

~ WELDED PIPE TIE ~

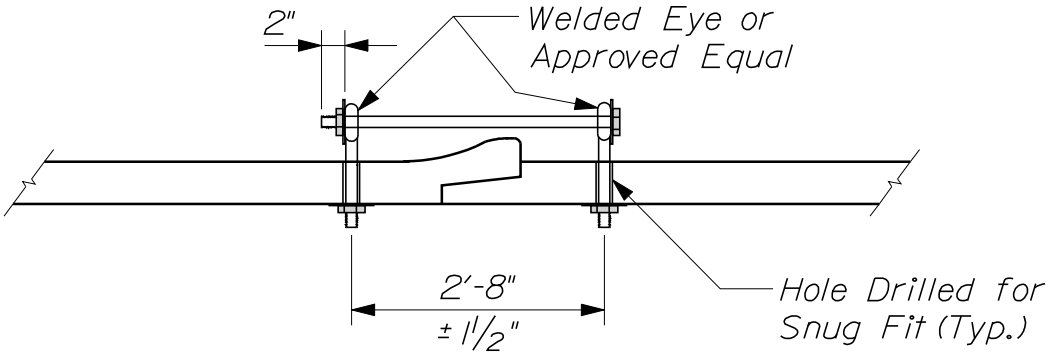

~ EYE BOLT TIE ~

TABLE B			
BOLT O.D.	STEEL PIPE I.D.	WELD SIZE	CRP PIPE I.D.
⅝"	¾"	5/16"	12" - 26"
¾"	1"	⅜"	27" - 66"
1"	1¼"	½"	67" - 132"

CONCRETE PIPE TIES

603(12)

GENERAL NOTES

1. Catch basins in excess of 8′ in depth shall, if directed, be provided with steps similar to those detailed for manholes.

2. Drain holes in precast sumps shall be less than or equal to 3" in diameter and shall be plugged with mortar when constructed.

3. All precast sections of less than 8" wall thickness shall have tongue and groove joints.

4. Cone and ring sections shall have a wall thickness of 4" minimum to 8" maximum.

5. Minimum wall thickness at the sump shall be 4" as specified in AASHTO M199.

6. The wall around inlet and outlet pipes shall be a pre-cast opening 2" larger than the outside diameter of the pipe.

7. Lift holes or lift handles shall be provided for installation of Catch Basins and Manholes.

8. Lift holes shall not exceed 3" in diameter and shall be plugged with mortar when constructed. Lift handles shall not exceed 3" in diameter and shall be cut off as directed by the Resident Engineer prior to back filling the structure.

Structure	Top					Shape				Grate
Catch Basin	A	B	D	A(P)	B(P)	1	2	5	6	
Type A	■					■		■		C
Type B		■				■		■		C
Type A Portland				■		■		■		P
Type B Portland					■	■		■		P
Type F										C*
Manhole			■				■		■	MHC

*Certain applications may allow for non-cascade grates.

~ TABLE OF CATCH BASIN TYPES ~
(combinations of tops and types)

# CATCH BASINS
604(01)

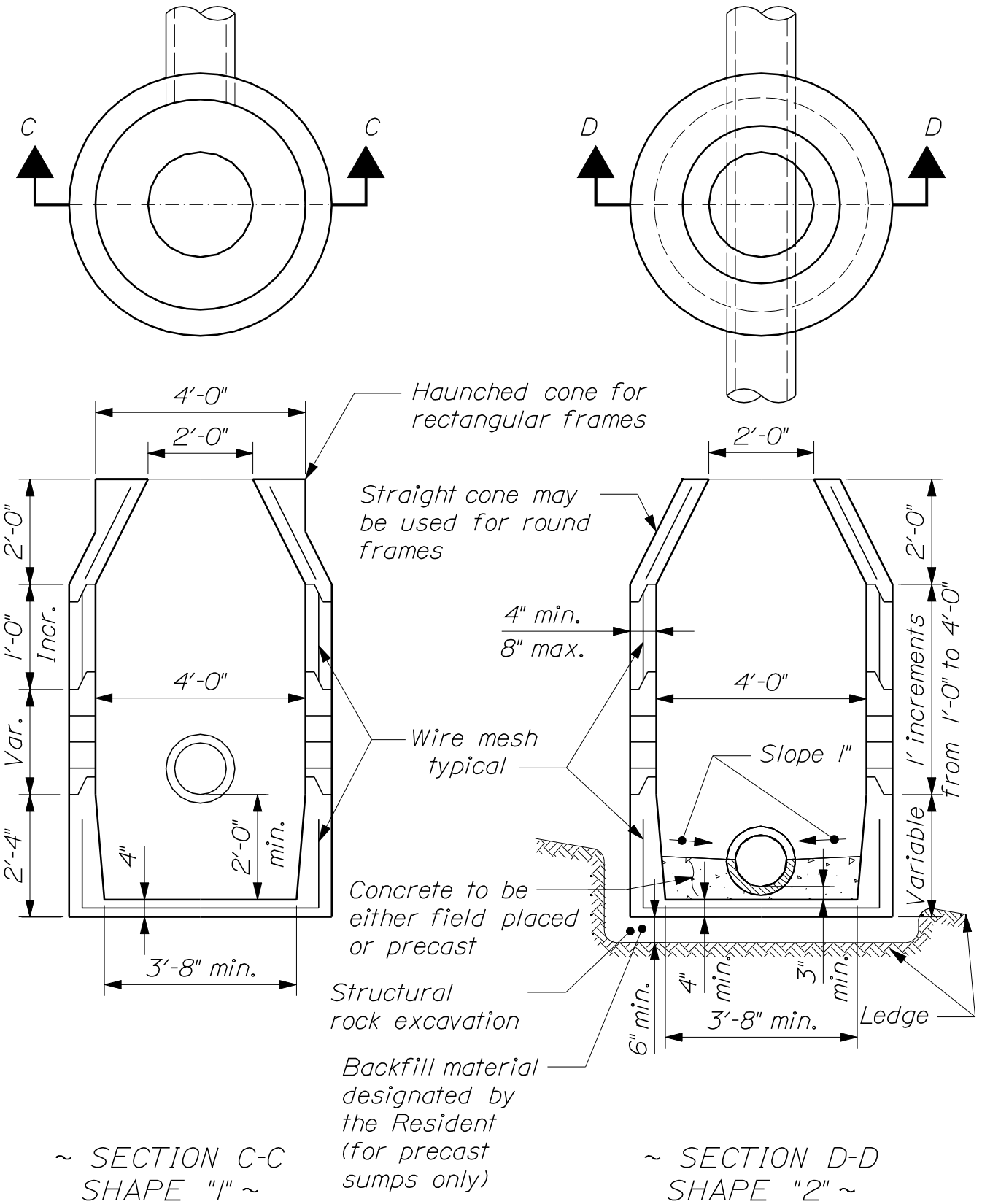

Dimensions are intended to be nominal

CATCH BASIN OR MANHOLE

604(02)

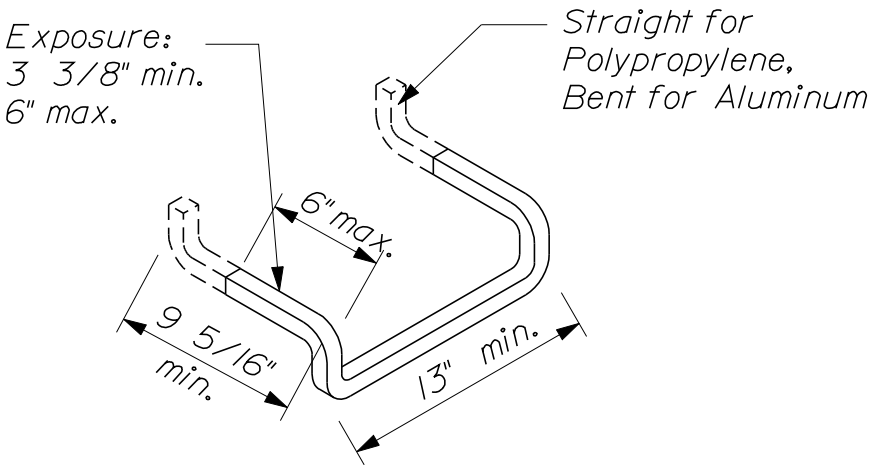

~ STEP ~

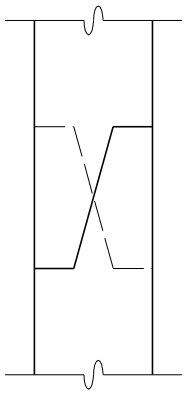

~ DETAIL "A" ~

Alternate Joint

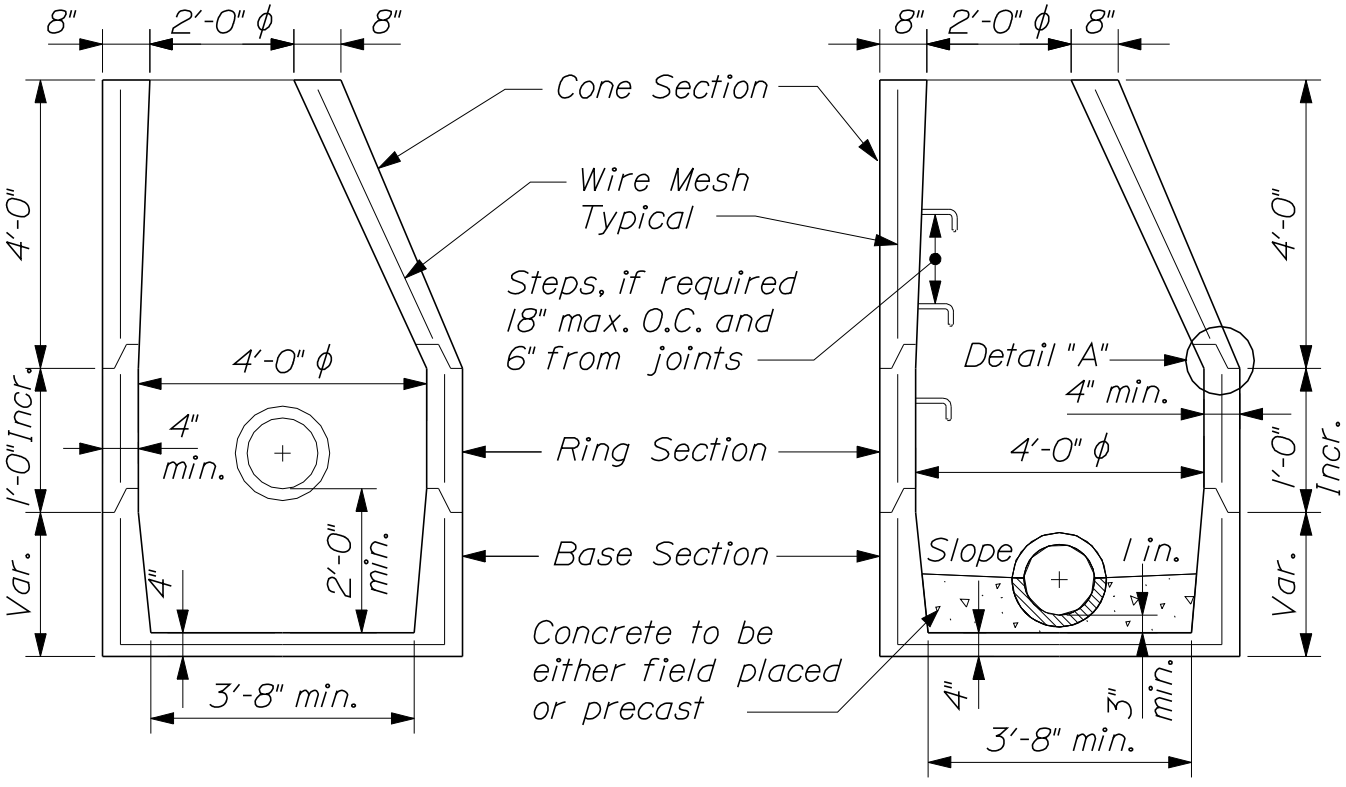

~ SHAPE "5" ~

~ SHAPE "6" ~

Dimensions are intended to be nominal.

CATCH BASIN OR MANHOLE

604(03)

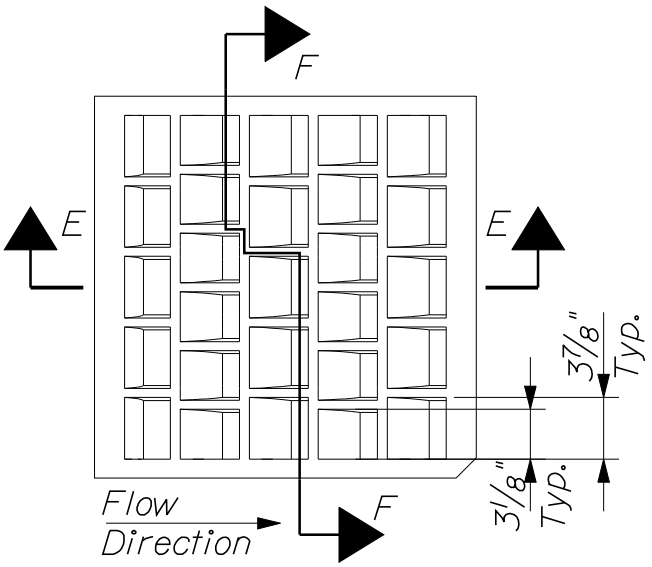

~ TOP VIEW ~

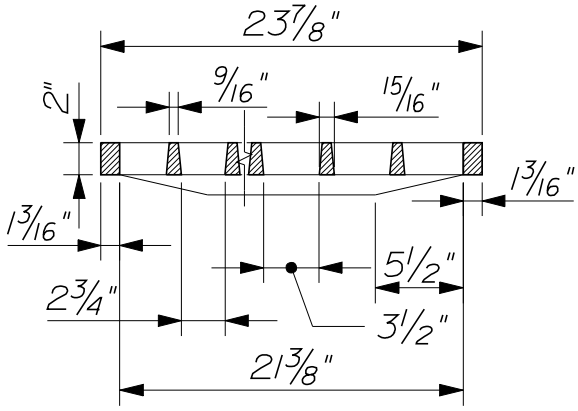

~ SECTION F-F ~

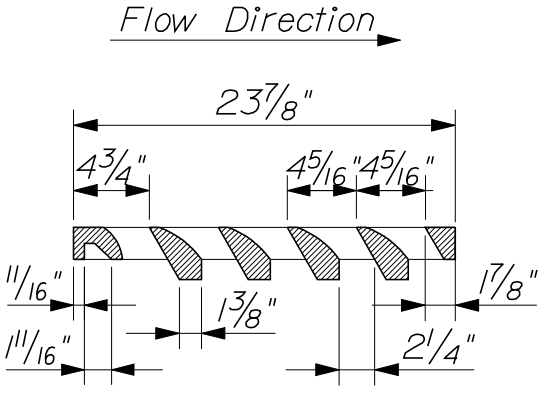

~ SECTION E-E ~

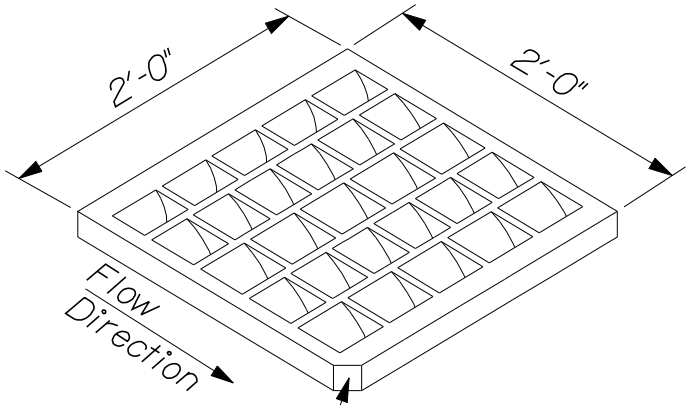

~ ISOMETRIC VIEW ~

This corner left off for "right" grate. Diagonally opposite corner for "left" grate to fit in keyed frames.

NOTES:

1. To be used where parallel bar grates would present a hazard to bicycle traffic.
2. For use on catch basin types: A1-C, A2-C, A5-C, B1-C, B2-C, B5-C, F3-C, F4-C, F5-C, F6-C.

"CASCADE - TYPE" GRATES

604(04)A

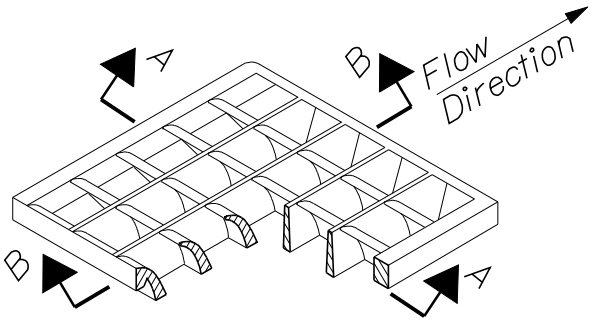

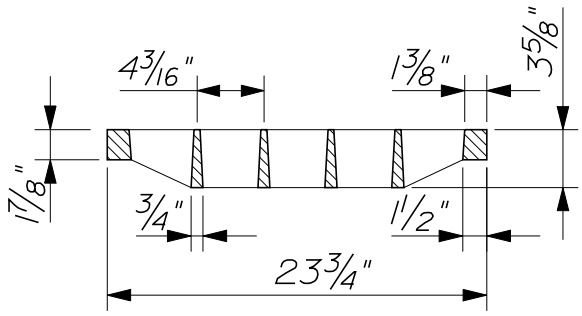

~ SECTION A-A ~

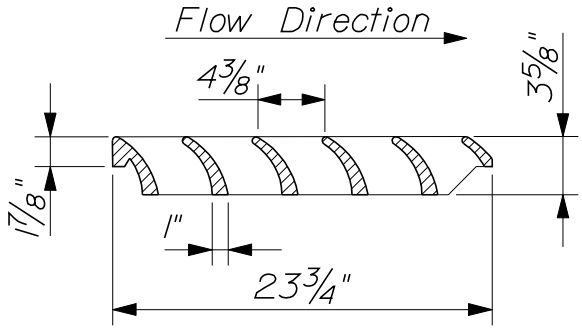

~ SECTION B-B ~

NOTES:

1. To be used where parallel bar grates would present a hazard to bicycle traffic.
2. For use on catch basin types: A1-C, A2-C, A5-C, B1-C, B2-C, B5-C, F3-C, F4-C, F5-C, F6-C.

"CASCADE - TYPE" GRATES

OR APPROVED EQUAL

604(04)B

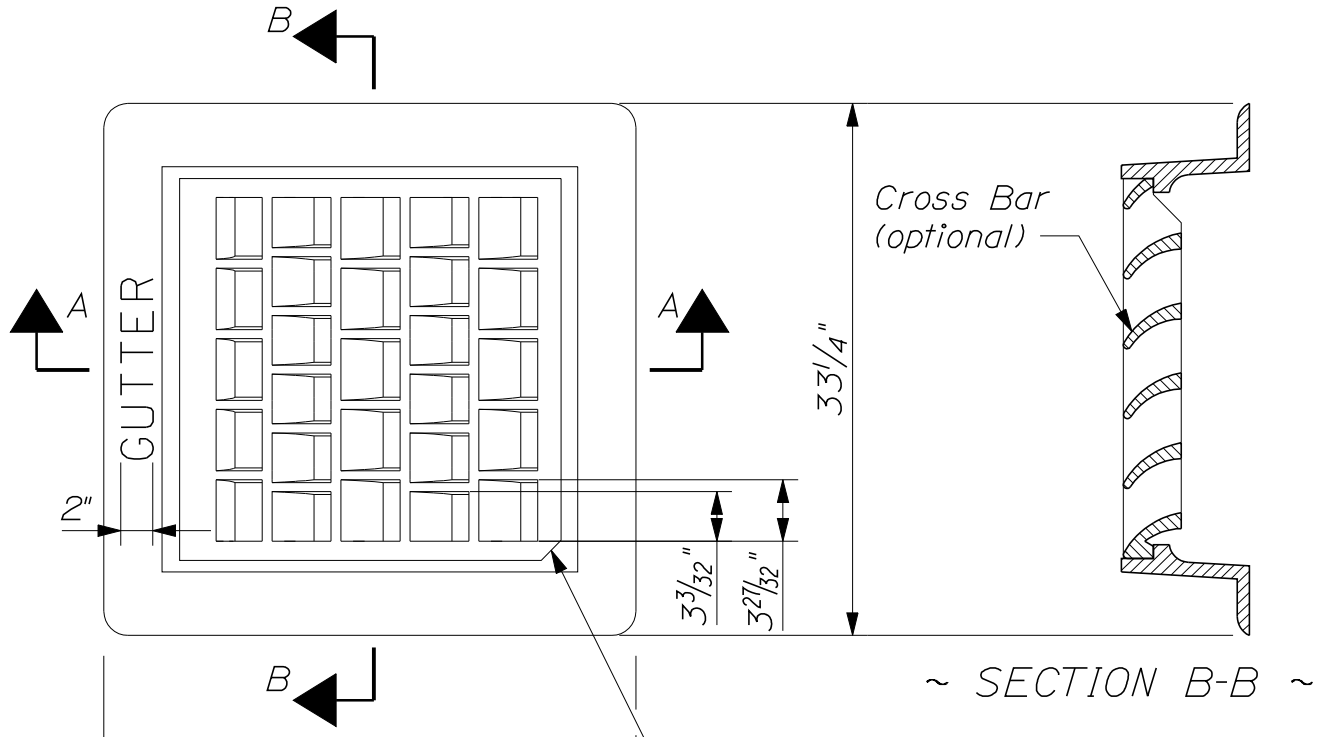

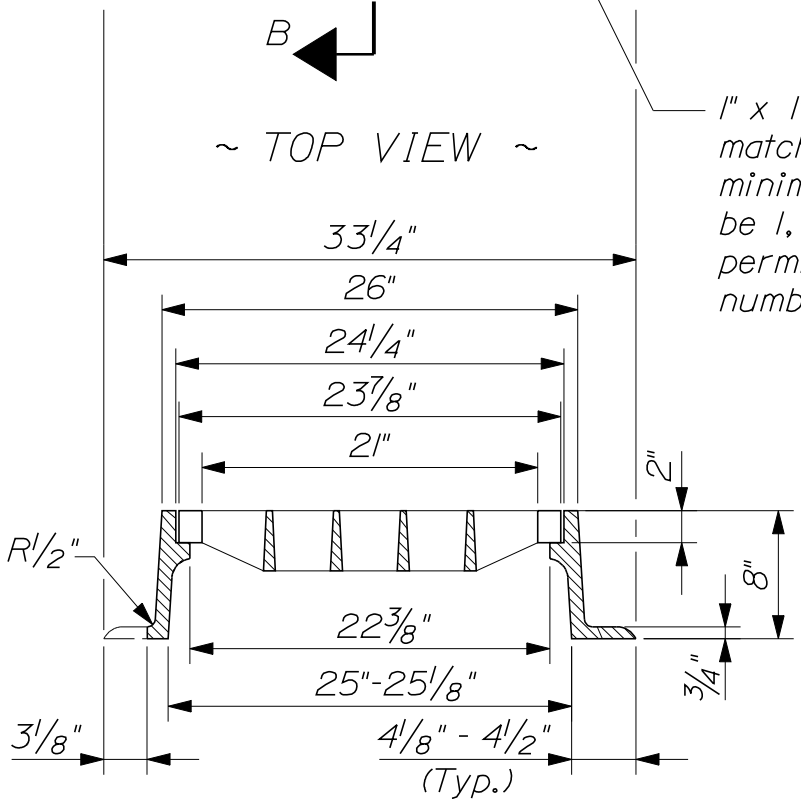

~ SECTION A-A ~

NOTES:

1. Type "A" frames are to have 3 flanges.
2. Type "B" frames are to have 4 flanges.
3. The word "gutter" is to be molded into the back flange - Type "B" only.
4. Frames and grates are to be of gray cast iron or ductile iron conforming to AASHTO M306.
5. Dimensions are nominal.

TYPE "A" & "B" CATCH BASIN TOPS

604(05)

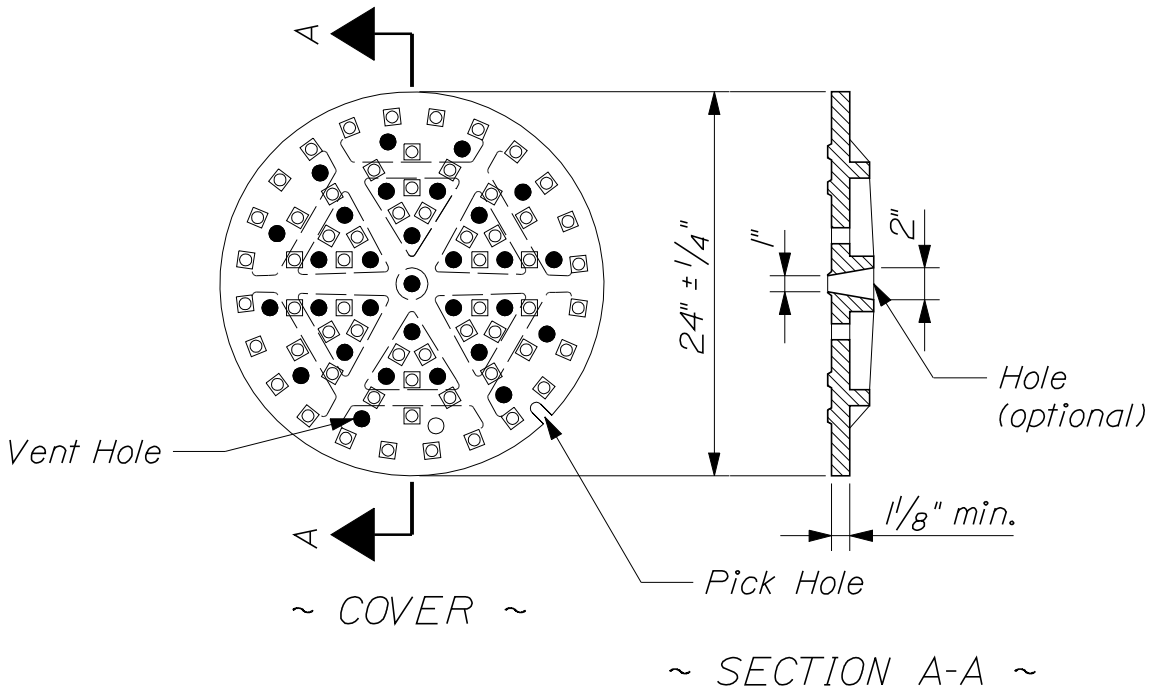

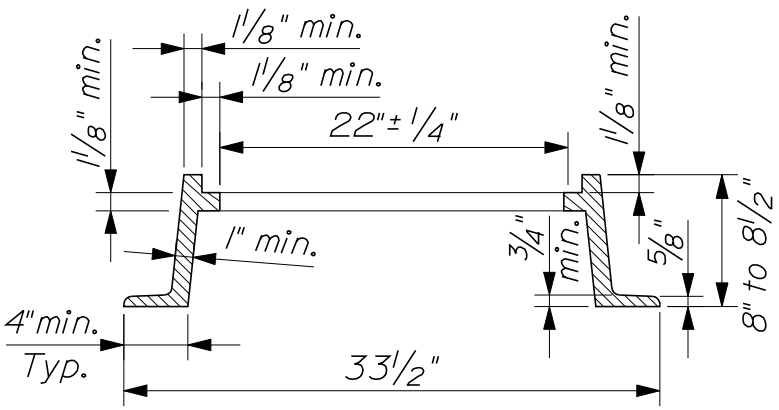

NOTES:

1. Manhole frames and covers are to be machined to a smooth fit and shall be of gray cast iron or ductile iron conforming to AASHTO M306.
2. Diamond top surface is optional.

MANHOLE TOP "D"

604(07)

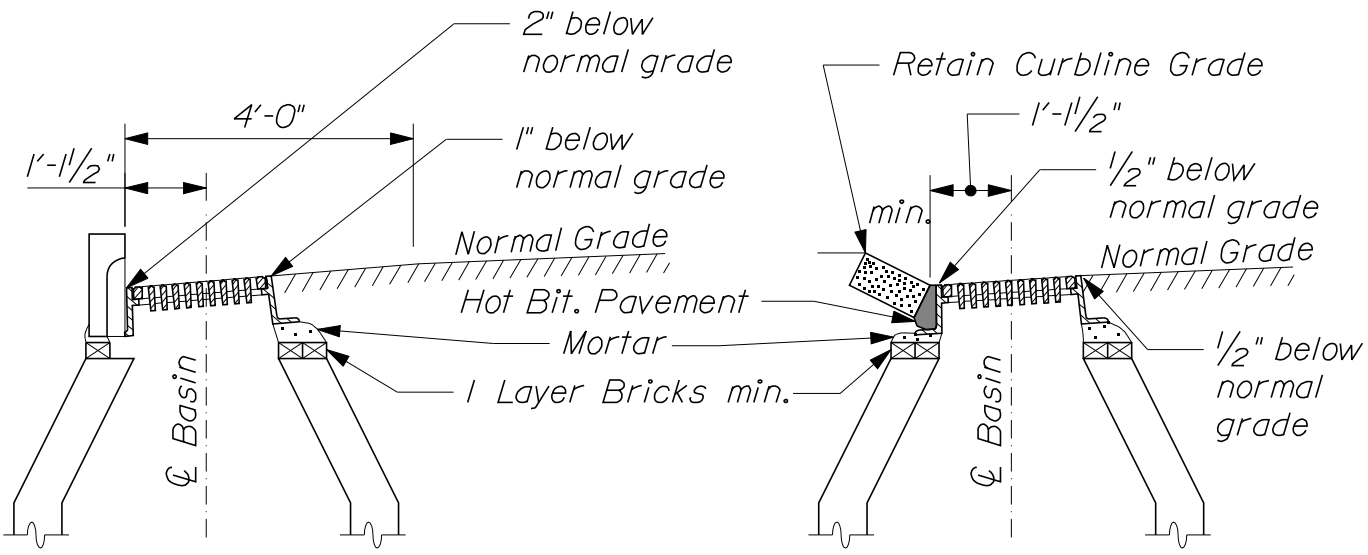

~ TYPE "A" ~
For use with
Curb Type 1 or 2

~ TYPE "B" ~
For use with
Curb Type 3 or 5

Dimensions are intended to be nominal.

CATCH BASIN TOP INSTALLATION

604(08)

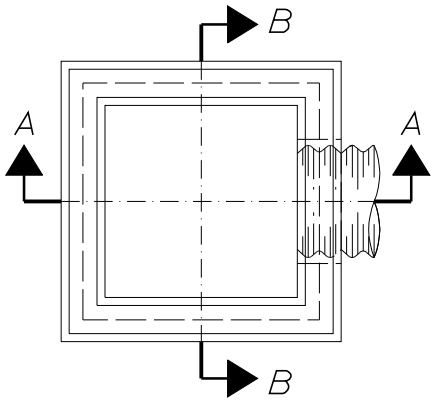

NOTE:
Entire Catch Basin with exception of leveling brick frame and grate to be precast as a single Portland Cement concrete unit, #4 rebar Minimum 8" O.C., or equivalent with Residents approval.

~ TOP VIEW ~

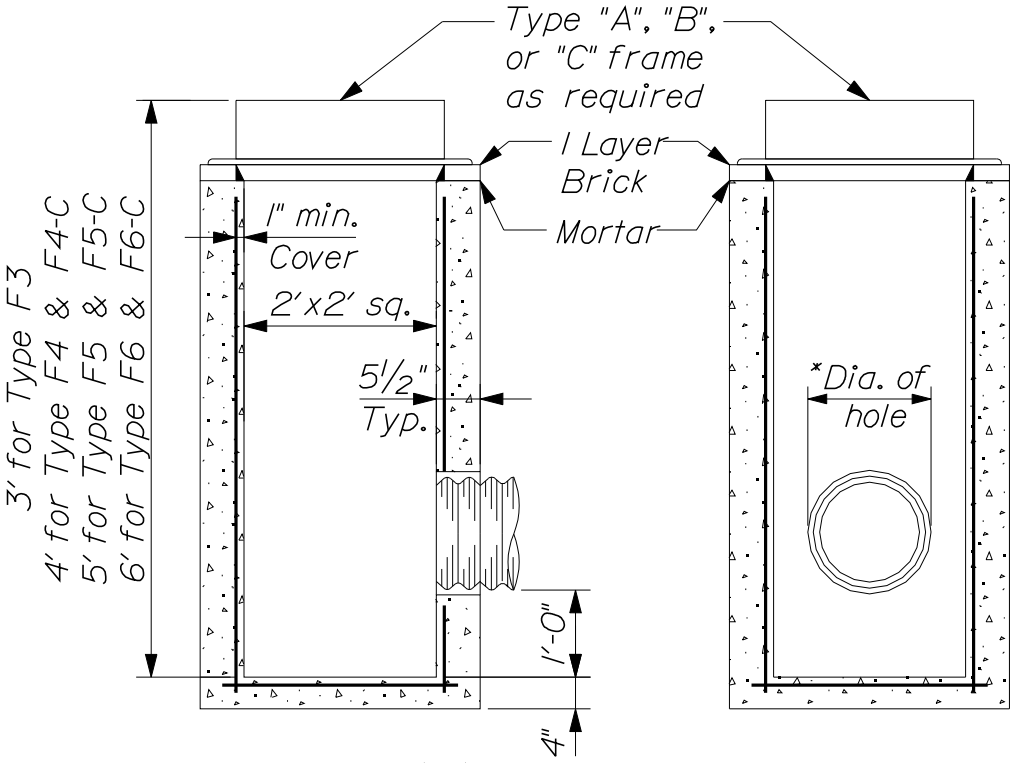

~ SECTION A-A ~ ~ SECTION B-B ~

*Diameter of hole to be 3" larger than the inside diameter of flexible pipe or the outside diameter of rigid pipe.

CATCH BASIN TYPE "F"

604(10)

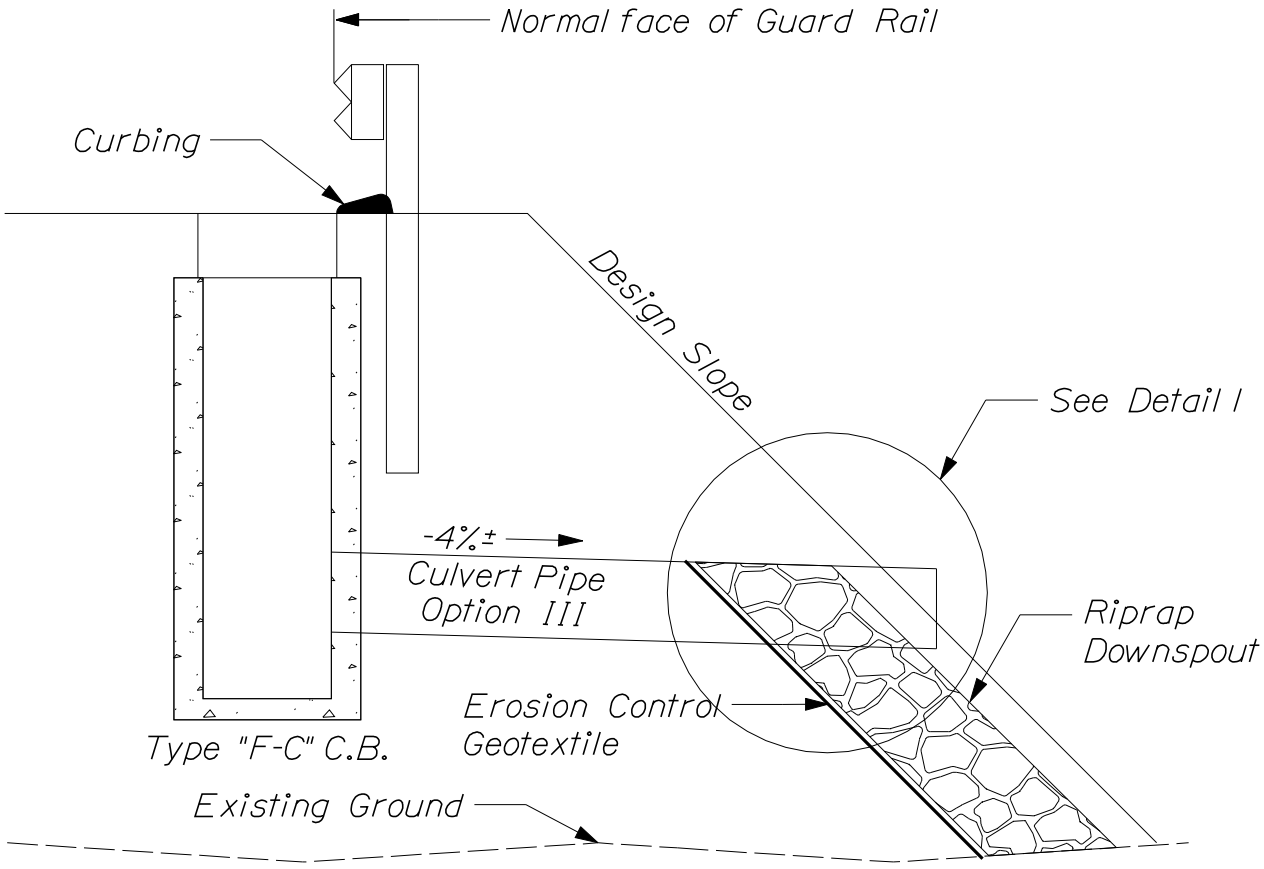

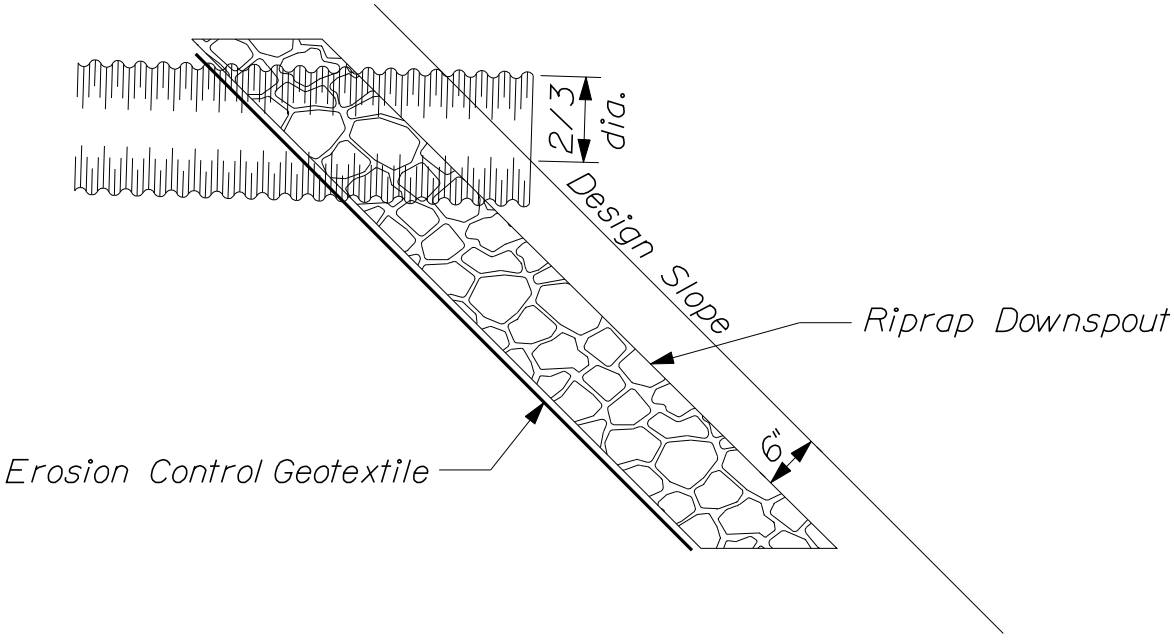

~ DETAIL I ~

TYPE "F" CATCH BASIN WITH OUTLET PIPE AND RIPRAP

604(II)

GENERAL NOTES

1. Sewer bricks to conform to ASTM Standard Specification Design #C 32-63, Grade M.A. or S.A.

2. Casting shall be of uniform quality, free from blowholes, porosity, hard spots, shrinkage, distortion, or other defects. They shall be smooth and well cleaned, trimmed and inspected, and approved asphalt paint. Material to be designated in ASTM Standard Specifications. 48-Class 35.

3. All concrete shall be class "A" having a minimum ultimate compressive strength of 4,000 lb/in^2 at the end of 28 days unless otherwise noted.

4. Plastic Manhole Steps 12" O.C. made of Co-Polymer Polypropylene with $\frac{3}{8}$ grade 60 steel rebar inside with 1st step 8" below top of cone.

5. Waterproofing - The outside surface of catch basins and manhole cones shall be given 2 coats of waterproofing material in accordance with the instructions of the Manufacturer. Time shall be allowed between coats to permit sufficient drying. This way the application of following coats has no effect on the previous coat(s).

6. Catch basins not in a system that connects into existing City of Portland drainage system may be constructed without flexible plastic gaskets and will have a minimum 3 foot sump.

REINFORCED CONCRETE CATCH BASIN
TYPE A-1-P & TYPE B-1-P

604(12)

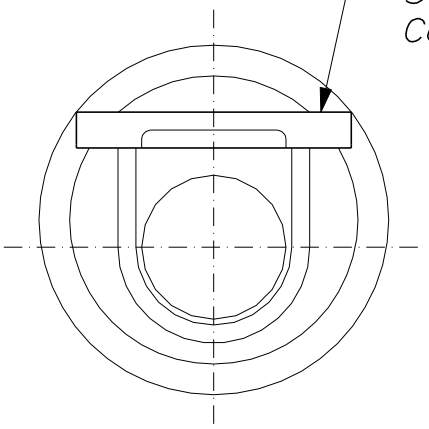

~ PLAN ~
(Cover - Frame - Stone)
(Type A-1-P)

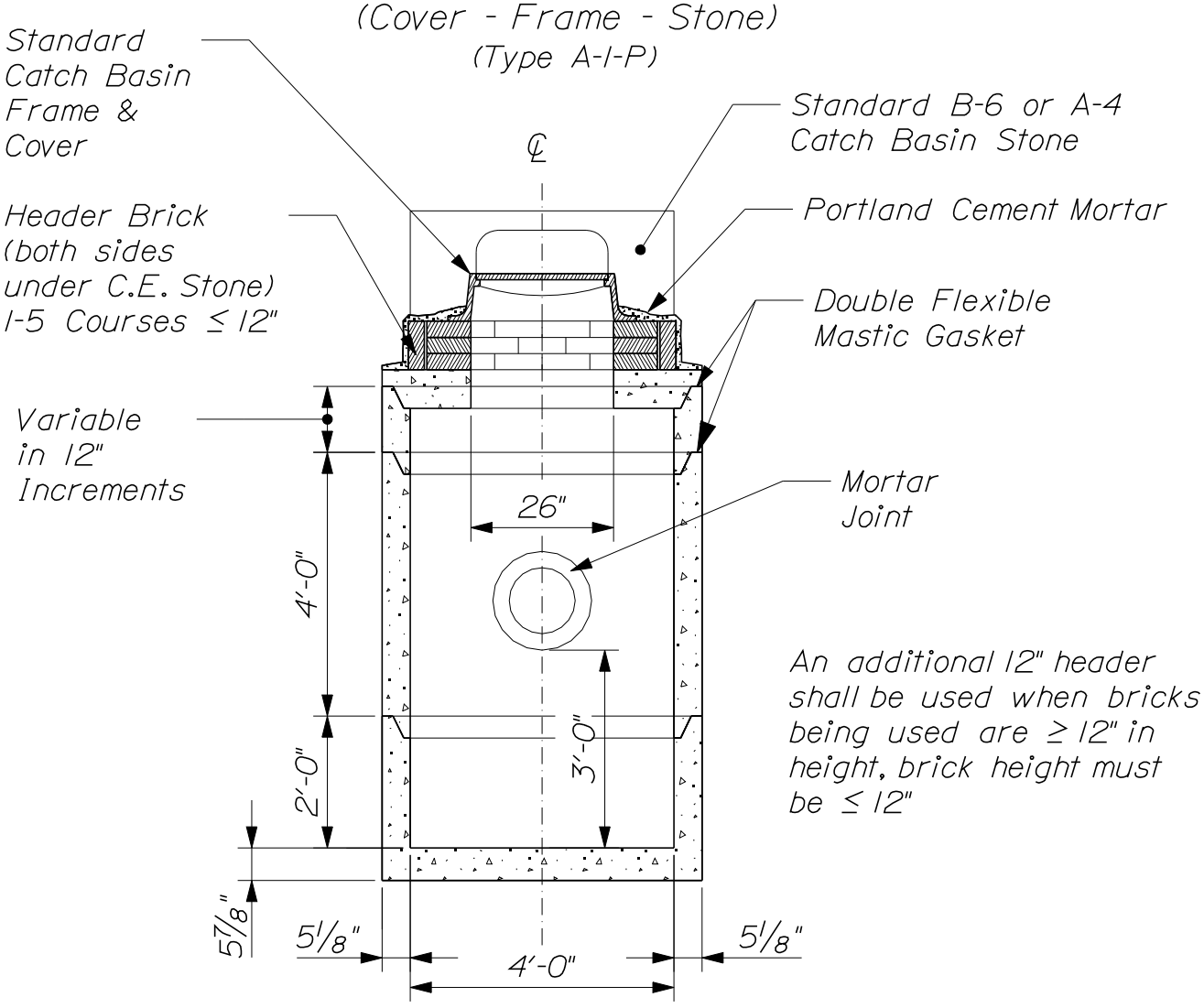

Construction Alternate "A"

REINFORCED CONCRETE CATCH BASIN TYPE A-1-P

604(13)

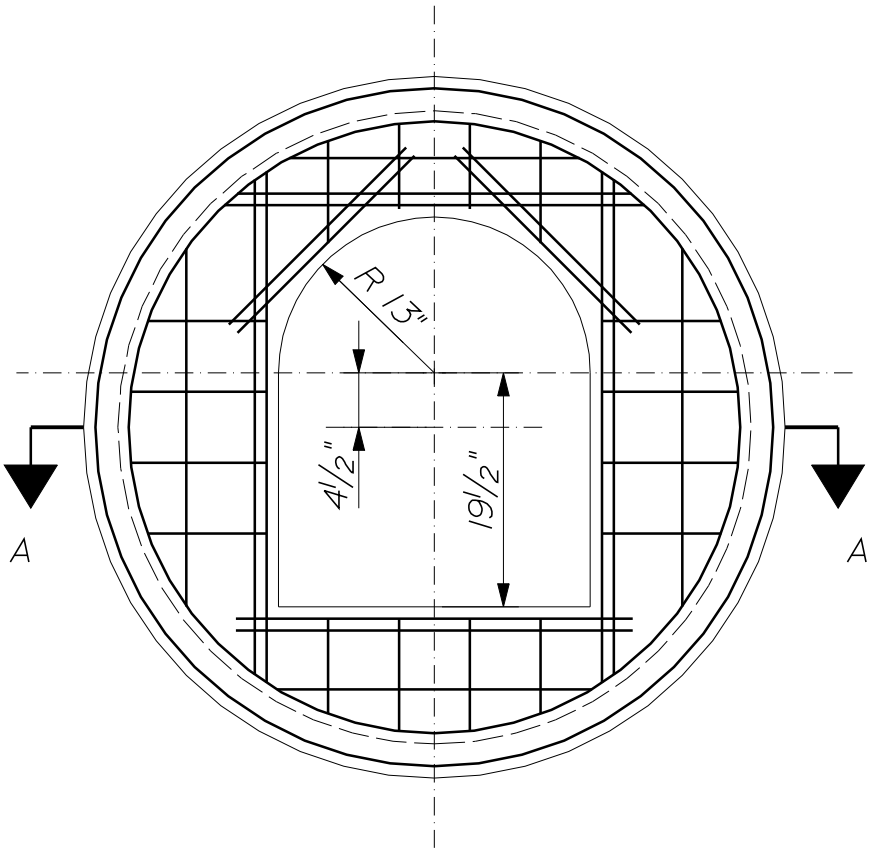

~ PLAN ~

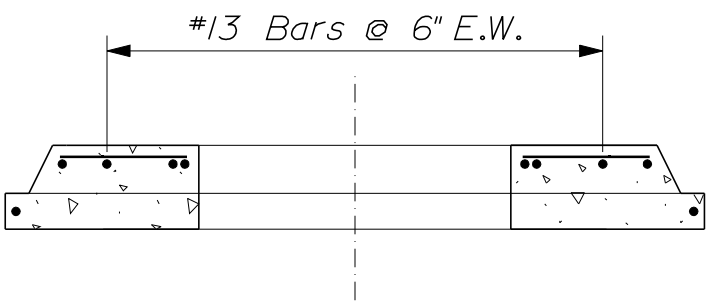

~ SECTION A-A ~

~ TOP SLAB DETAIL FOR TYPE A-1-P ~

REINFORCED CONCRETE CATCH BASIN TYPE A-1-P TOP SLAB DETAIL

604(14)

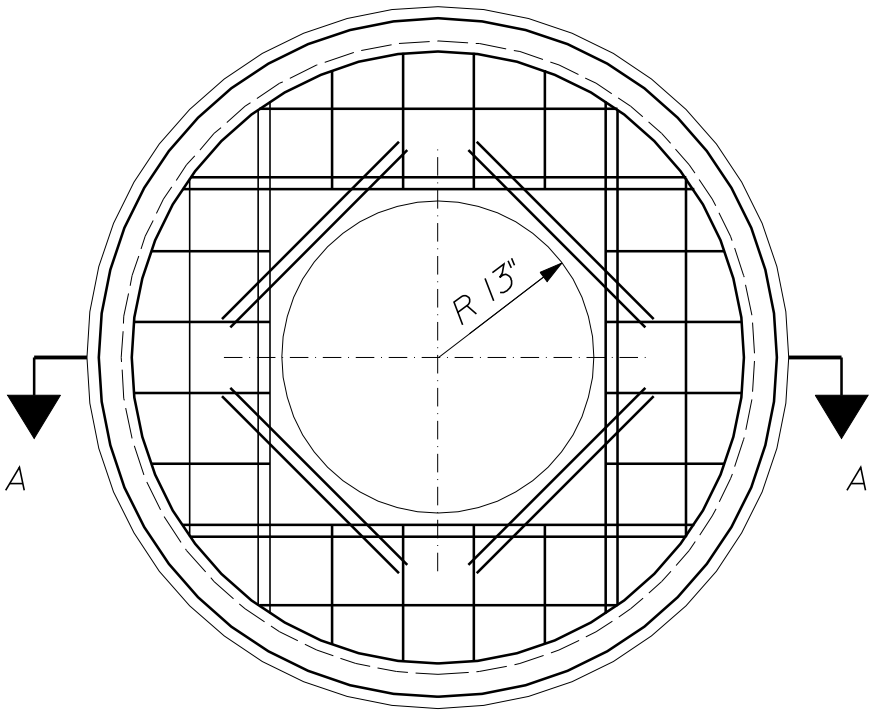

~ PLAN ~

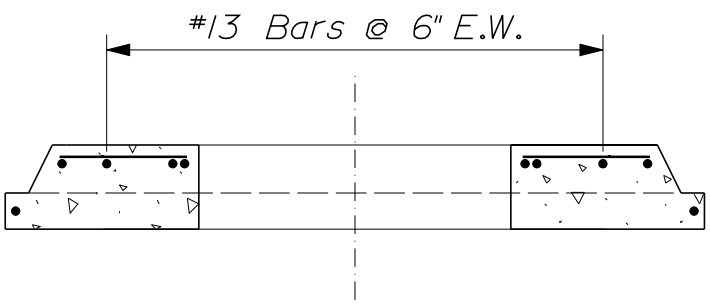

~ SECTION A-A ~

~ TOP SLAB DETAIL FOR TYPE B-I-P ~

REINFORCED CONCRETE CATCH BASIN TYPE B-I-P TOP SLAB DETAIL

604(15)

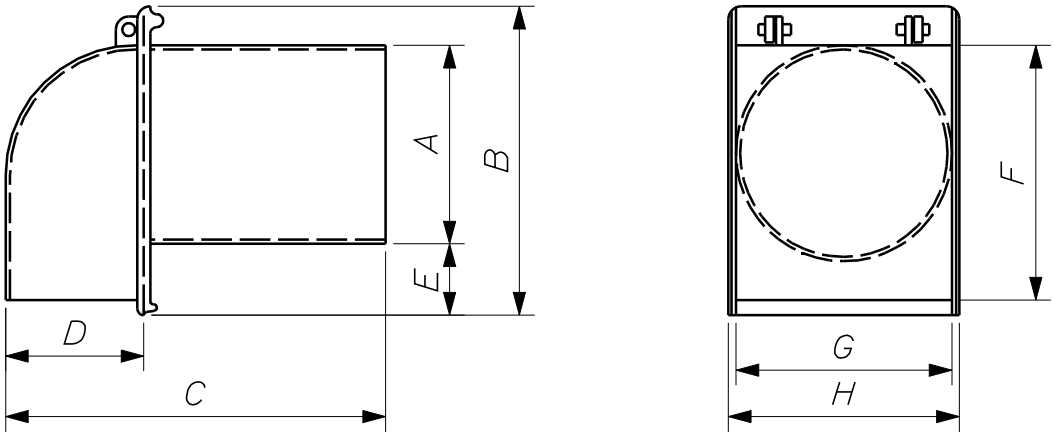

~ TRAP DETAIL ~

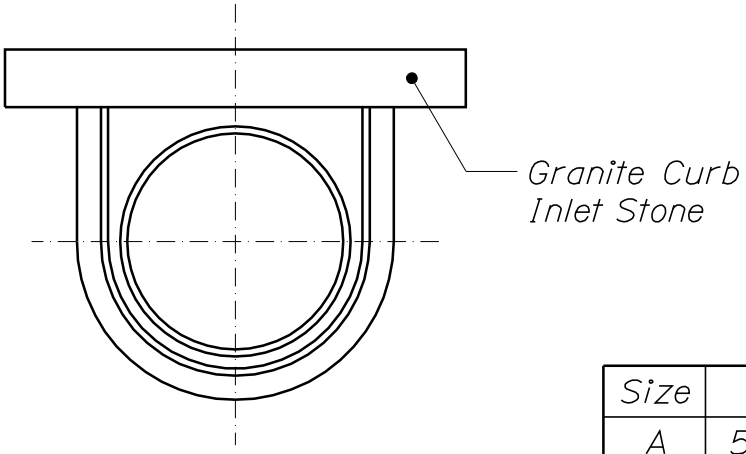

~ TYPE 'A' INLET ~

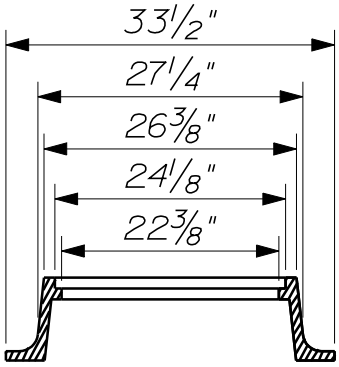

Size	6"	8"	10"	12"	15"
A	5 1/2"	7 1/2"	9 1/2"	11 1/2"	Similar to Designs at Left
B	13 3/8"	15"	16"	17"	
C	13 3/4"	15 3/8"	16 1/4"	22"	
D	5 3/8"	5 1/2"	6"	8"	
E	5 7/8"	5 3/8"	4 1/2"	3 1/4"	
F	11 5/8"	13 3/4"	14 1/8"	15 1/2"	
G	6 1/2"	8 3/4"	11 1/2"	12 1/2"	
H	7 1/4"	9 3/8"	12 3/8"	13 3/8"	

REINFORCED CONCRETE CATCH BASIN
TYPE A-1-P

604(16)

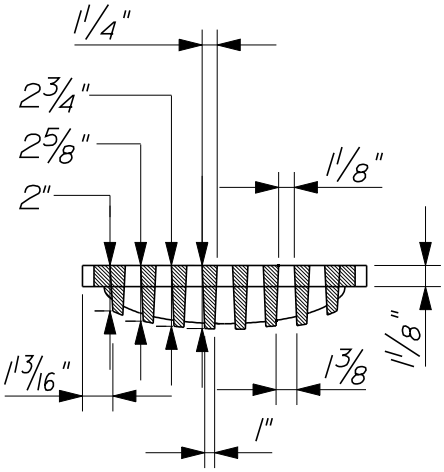

SECTION B-B

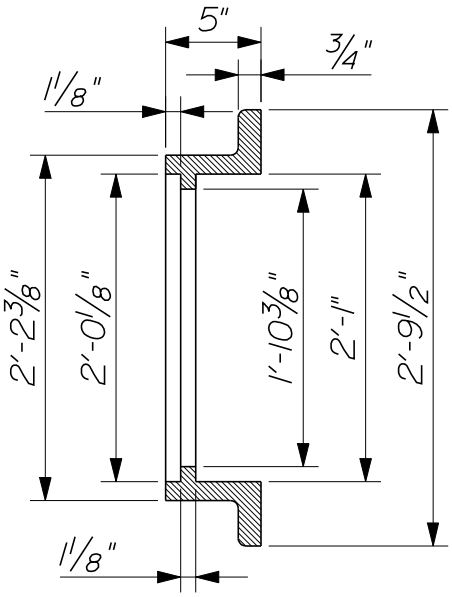

SECTION B-B

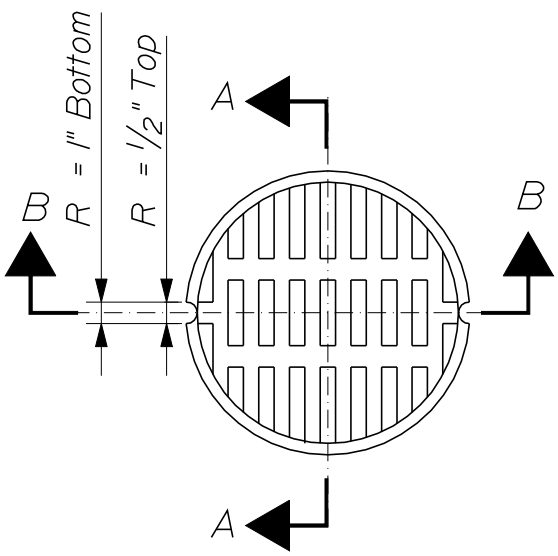

PLAN VIEW

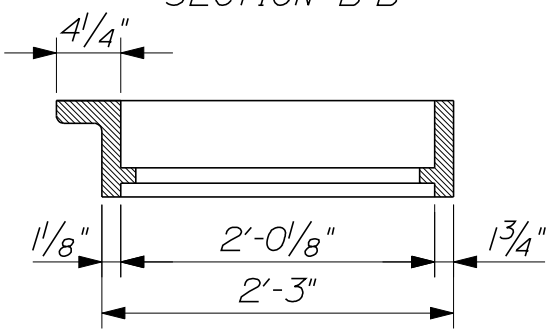

SECTION A-A

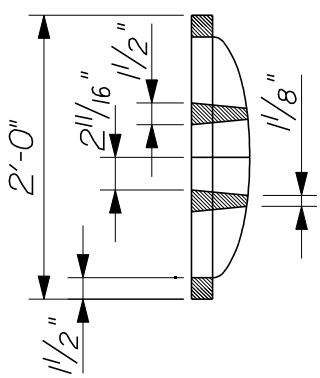

SECTION A-A

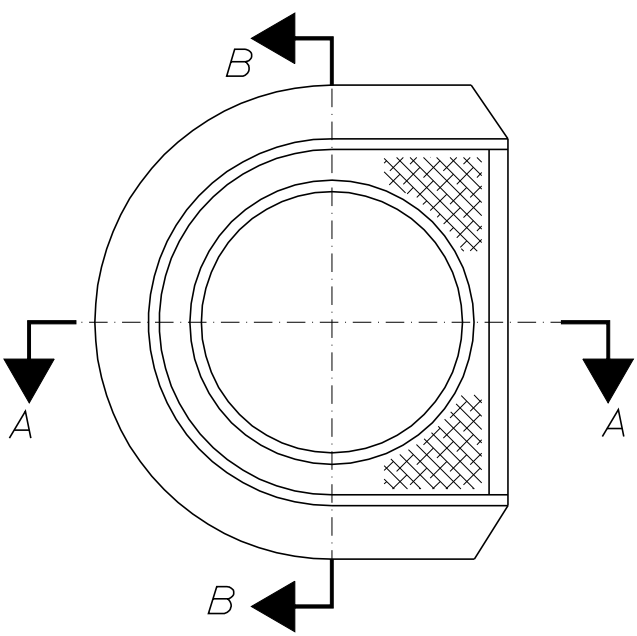

PLAN VIEW

~ GRATE DETAIL ~

~ FRAME DETAIL ~

REINFORCED CONCRETE CATCH BASIN TYPE B-1-P DETAILS

604(17)

NOTES:

1) Manhole frames, valve boxes, and covers shall meet ASTM A48

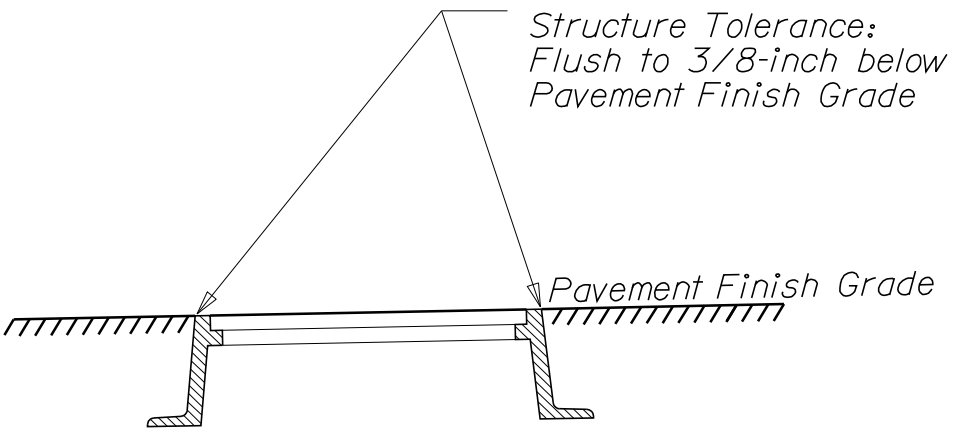

UTILITY STRUCTURE

(Manhole, Valve Box, Vault Cover)

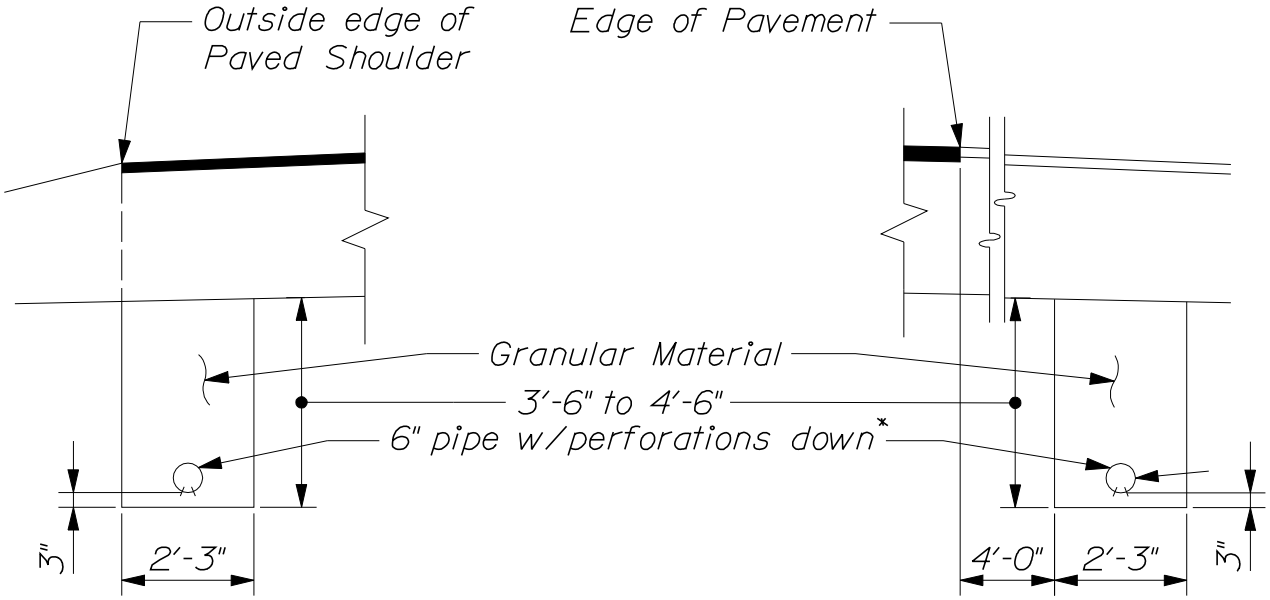

~ TYPE "B" PAVED SHOULDER ~

~ TYPE "B" GRAVEL SHOULDER ~

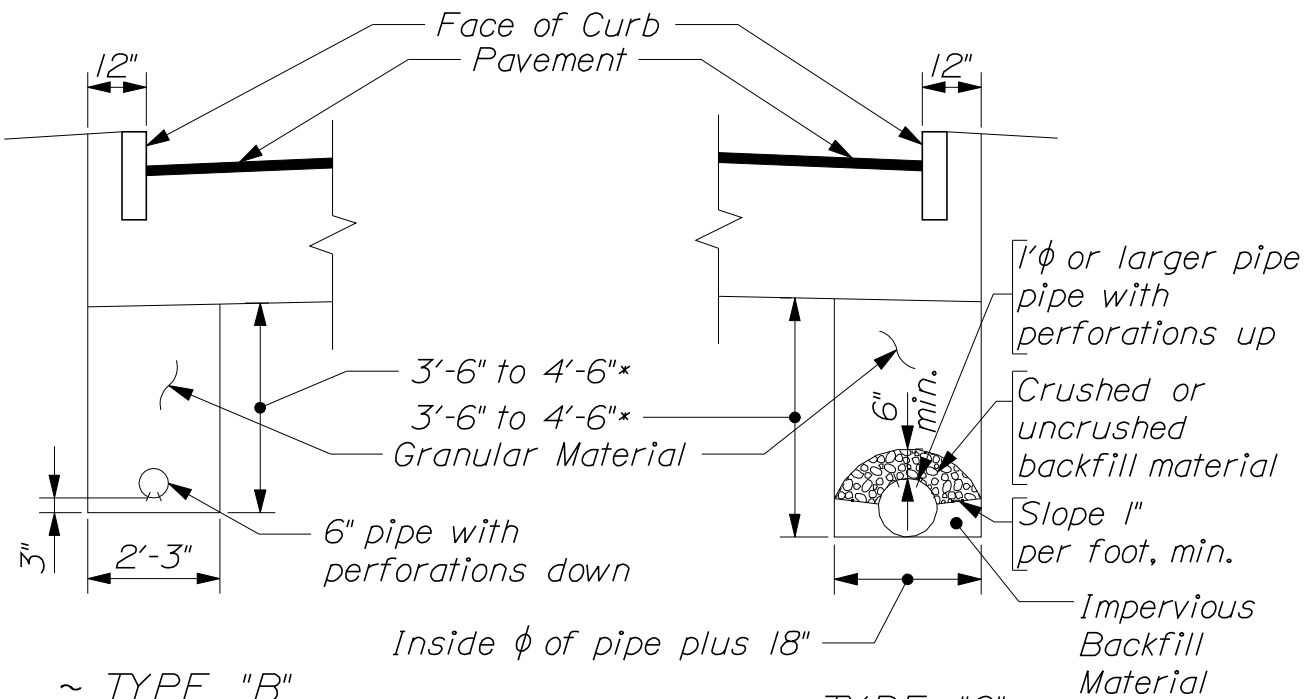

~ TYPE "B" CURBED SHOULDER ~

~ TYPE "C" ~

*Unless otherwise shown on the plans

UNDERDRAIN

605(01)

UNDERDRAIN NOTES

1. The maximum vertical measurement of depth for payment of Structural Rock Excavation will be to a horizontal plane located 12 inches below the bottom of the invert of the pipe for Underdrain Type "B" and Underdrain Type "C".

2. The material for Elbows, Tees, & Wyes for Underdrain Types "B" and "C" shall be at least as thick as the largest size pipe being connected.

3. The invert elevation of Underdrain Type "B" outlets shall be a minimum of 6 inches above the flow line of a ditch or the original ground.

4. Width of the trench for underdrain outlet will be the same as the underdrain trench.

5. No allowance for payment will be made for excavating or material excavated beyond the horizontal dimensions shown for Types "B" or "C" Underdrain.

6. In "Box Sections" the edge of the trench shall be in line with the edge of box section.

Type "B" and Type "C" Underdrain Pipe									
Underdrain Pipe Nominal Wall Thickness in Inches						Underdrain Stiffness in KPa			
Corrugated				Metal Pipe		PVC Pipe		Polyethylene Pipe	
Diameter	M 218	M 274 & M 246	M 197	Type IR ¾ x ¾ x 7½"		M 278	ASTM F 949	M 294 SP	M 252 SP
				M 274	M 197				
Type "B" Underdrain Pipe									
6"	0.064	0.052	0.048			320	340		340
Type "C" Underdrain Pipe									
12"	0.079	0.064	0.075			320		345	
15"	0.079	0.064	0.075			320		290	
18"	0.079	0.064	0.075	0.079	0.106			275	
21"	0.079	0.064	0.075	0.079	0.106			260	
24"	0.079	0.064	0.075	0.079	0.106			235	
30"	0.109	0.064	0.105	0.079	0.106			195	
36"	0.109	0.064	0.105	0.079	0.106			150	

M 218 = Zinc Coated (Galvanized) Corrugated Steel Pipe
M 274 = Aluminum Coated (Type 2) Corrugated Steel Pipe
M 246 = Polymer Pre-coated Galvanized Corrugated Steel Pipe
M 197 = Corrugated Aluminum Alloy Pipe
M 278 = Smoothwall PVC pipe
ASTM F 949 = PVC Corrugated Sewer Pipe with smooth interior
M 294 SP = Corrugated Polyethylene Pipe with smooth inner liner
M 252 SP = Corrugated Polyethylene Drainage Tubing with smooth inner liner

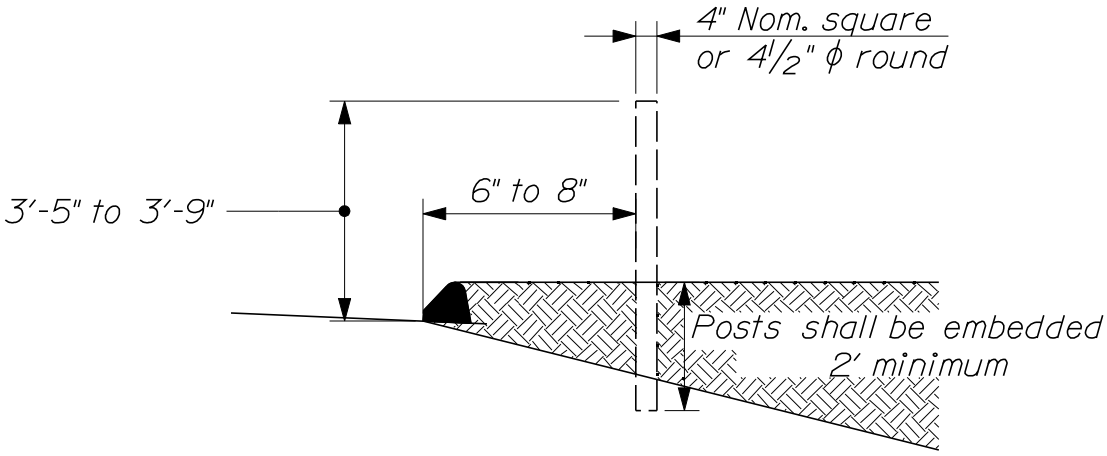

~ SINGLE WOOD POST ~

NOTES:

1. A post shall be provided for each mailbox.

2. Posts shall not be spaced closer than 30".

3. Posts should not be placed closer than 200' from an intersecting road.

4. When single wood posts exceed 4 1/2" diameter or square dimension, two 3/4" holes shall be drilled through the post at 90 degrees to each other, 4" above the finish grade.

MAILBOX POSTS

606(01)

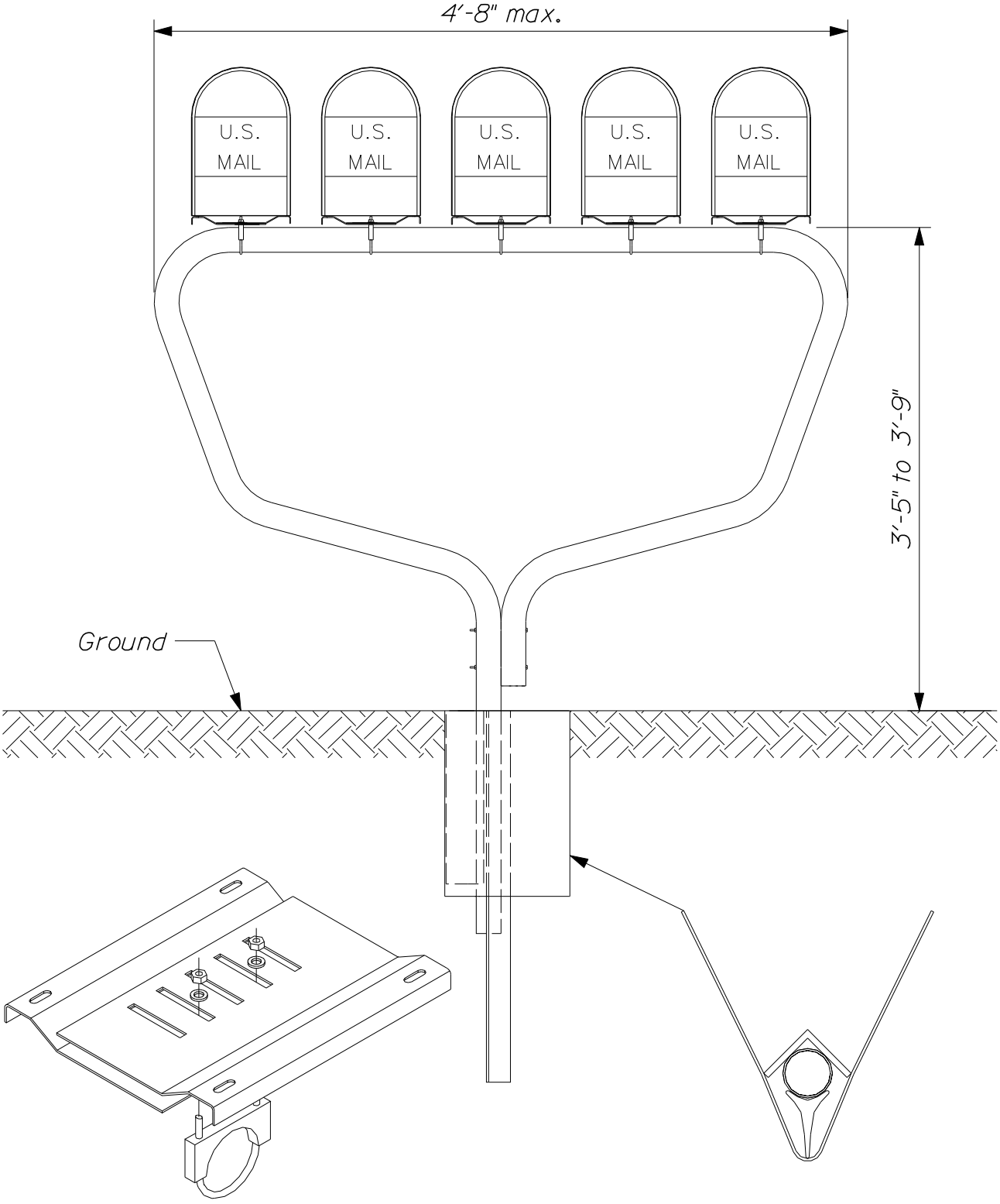

~ BRACKET DETAIL*~

~ ANCHOR* TOP VIEW ~

*Hardware may vary depending on particular approved system used.

MULTIPLE MAILBOX SUPPORT

606(02)

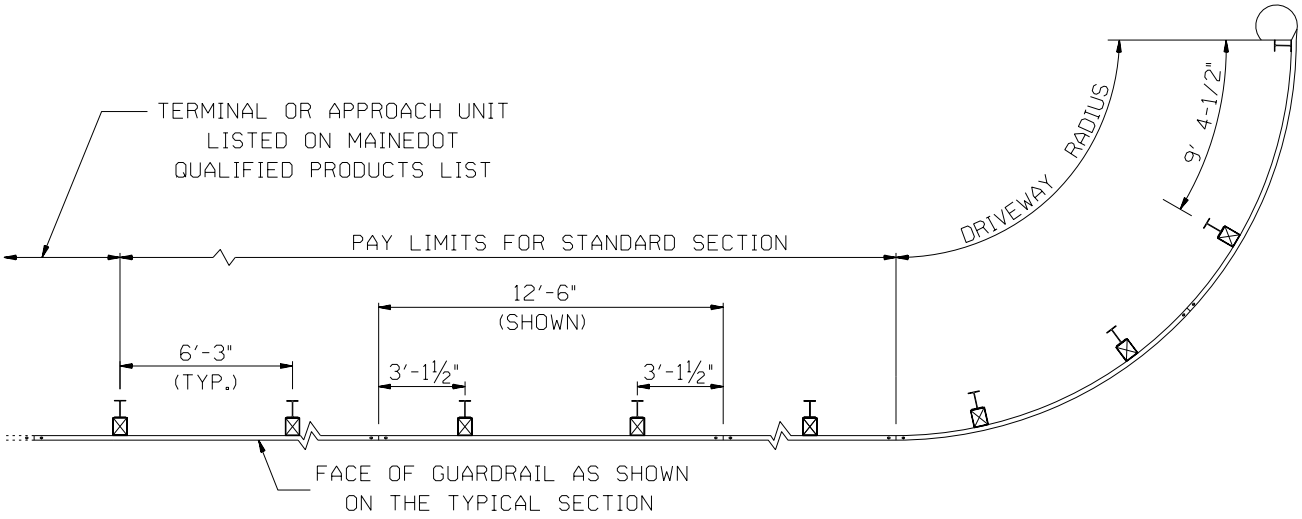

PLAN

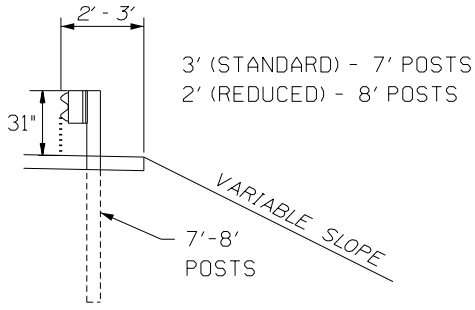

CROSS SECTION

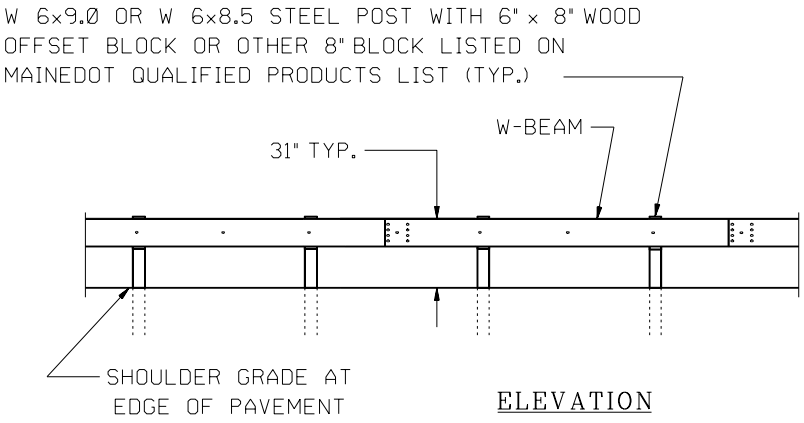

ELEVATION

31" W-BEAM GUARDRAIL - MID-WAY SPLICE

Identification letters and numbers on drawings refer to the standard detail drawings shown in "A guide to Standardized Highway Barrier Hardware" by AASHTO-AGC-ARTBA Joint Committee.

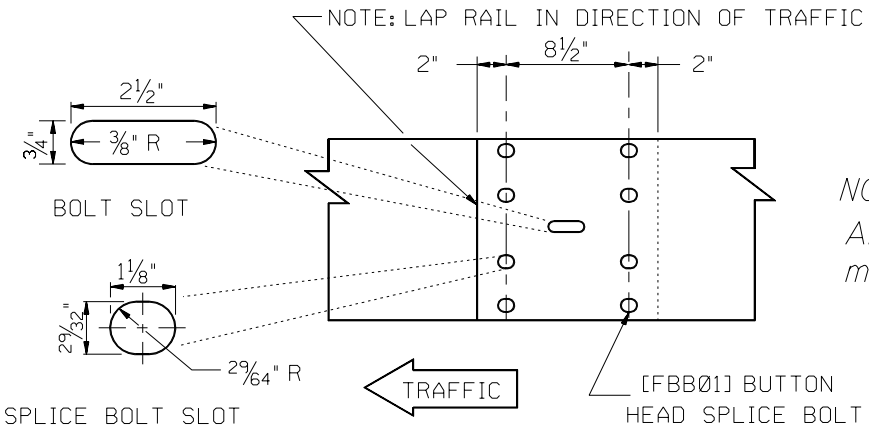

NOTE:
All dimensions subject to manufacturing tolerances

ELEVATION VIEW AT BEAM SPLICE

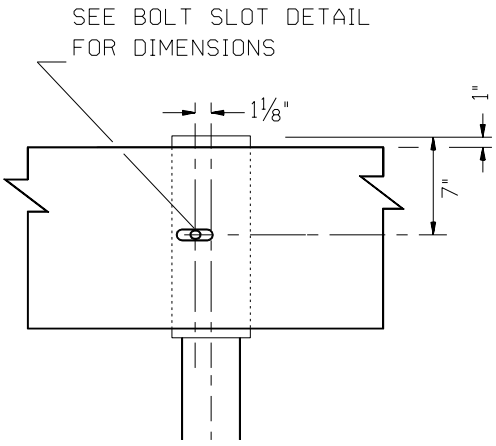

ELEVATION AT POST VIEW

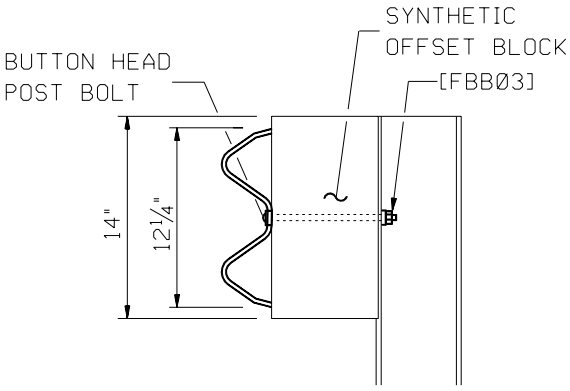

TYPICAL SIDE VIEW

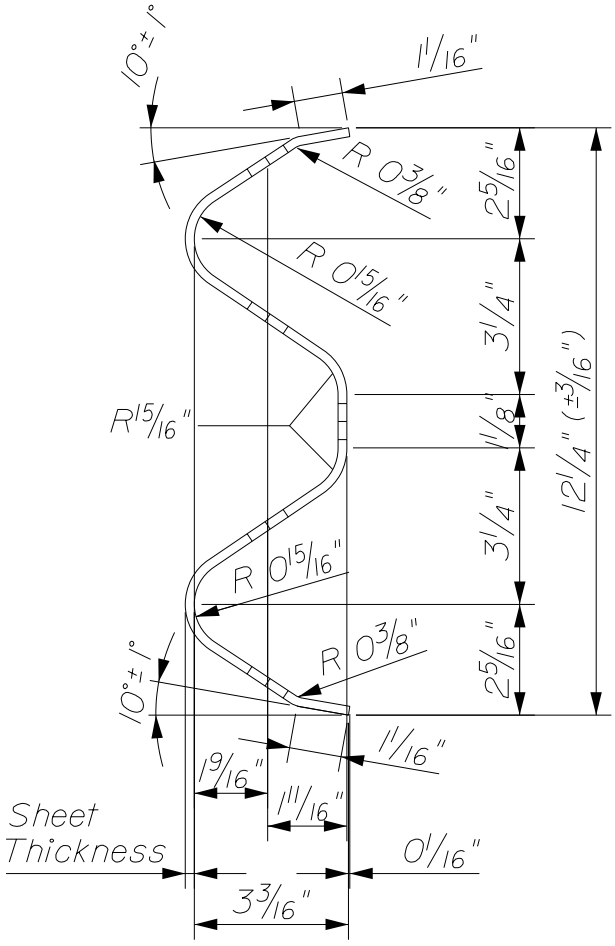

~ GUARDRAIL BEAM DETAIL RWM02A ~

GUARDRAIL
606(04)

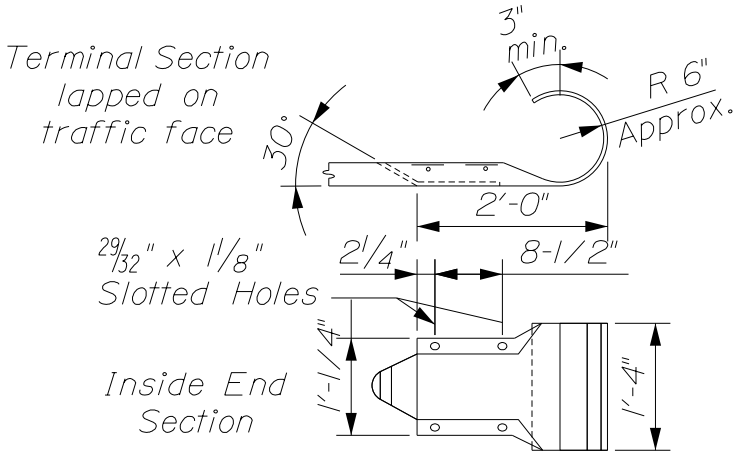

~ GUARDRAIL TERMINAL END - RWE03A ~

1. Use only on the end of circular guardrail at driveways.
2. Use only on the trailing end of guardrail on divided highways with washers (fwr03) installed on the last 9 posts.

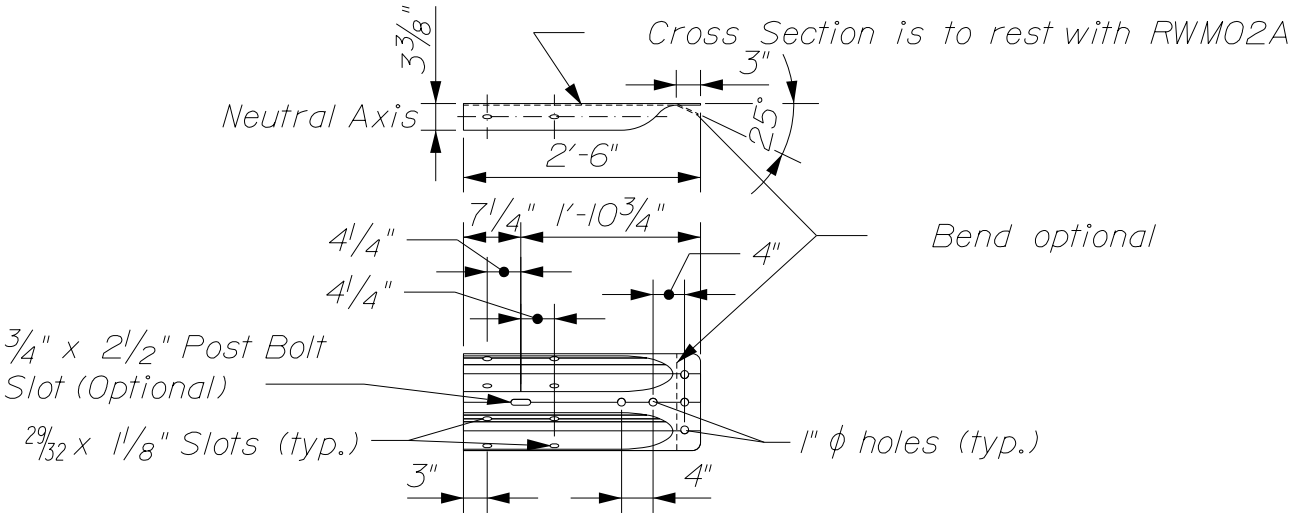

~ W-BEAM TERMINAL CONNECTOR RWE02A ~

~ OFFSET BLOCK DETAIL
FOR STEEL POST ~

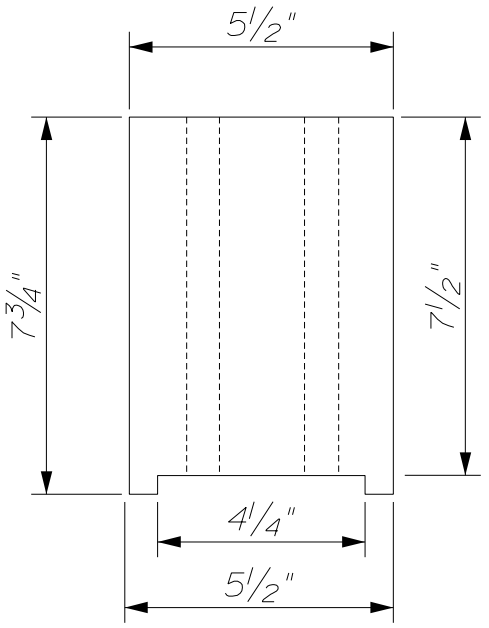

~ TOP VIEW ~

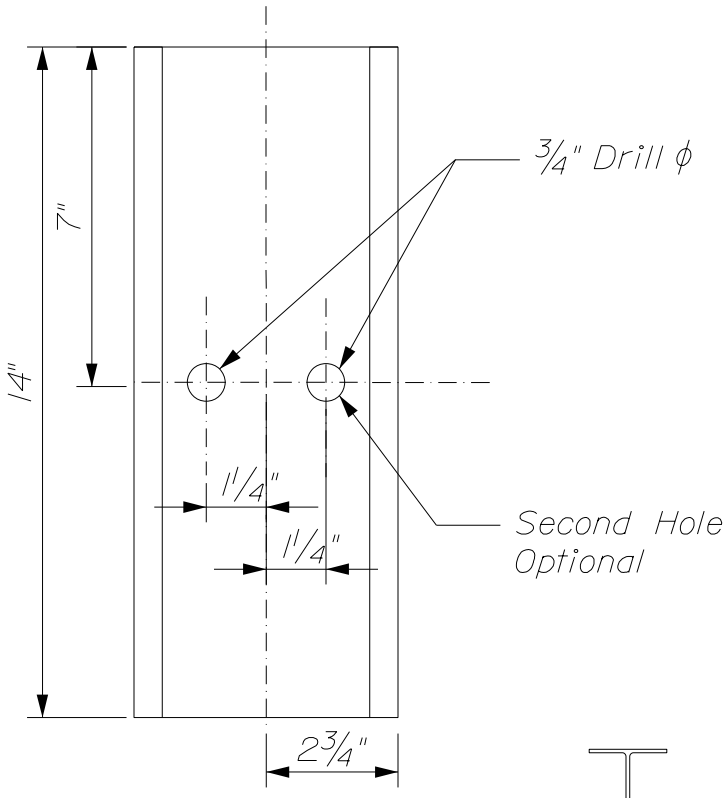

~ SIDE VIEW ~

Offset Block and
Post shall be bolted with
one FBB03 Post Bolt.
Holes to be 3/4" ϕ.

Location of holes
for attaching Offset
Block to Steel Post
(second Hole is Optional)

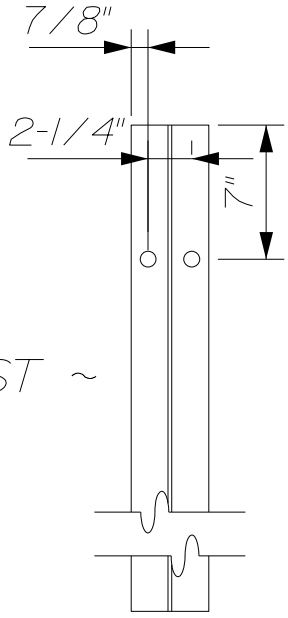

~ STEEL POST ~
(PWE01)

GUARDRAIL
606(06)

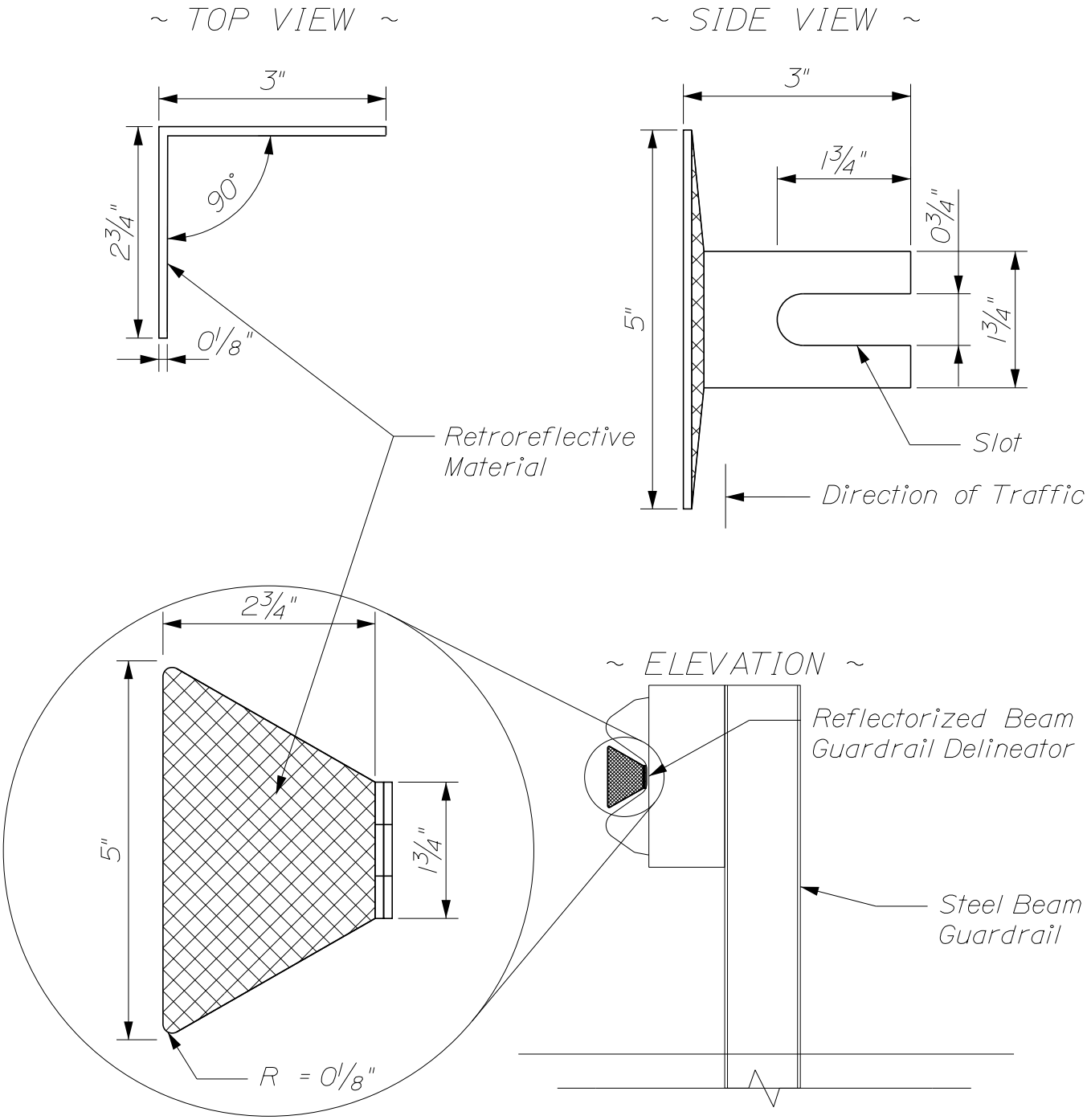

All dimensions are in inches and subject to manufacturing tolerances.

REFLECTORIZED BEAM GUARDRAIL DELINEATOR DETAILS

606(07)

NOTES:

1. Reflectorized Flexible Guardrail Markers shall be from Maine DOT's Approved Product List of Guardrail Material.

2. Installation:
   a. Each bolt-hole diameter shall be the bolt diameter + 1/16".
   b. Wood post attachment - attach marker with 2, 5/16" diameter galvanized lag bolts, having 3" of embedment into the wood post. Use 5/16" flat galvanized steel washers.
   c. Steel post attachment - attach marker with 2, 5/16" diameter galvanized hex head bolt, washer and nut assemblies, having 1/2" of bolt extension behind steel post. Washers shall be 5/16" flat galvanized steel.
   d. When provided by the marker manufacturer, a stiffening pipe shall be inserted into the base of the marker prior to drilling bolt holes and shall remain in-place.

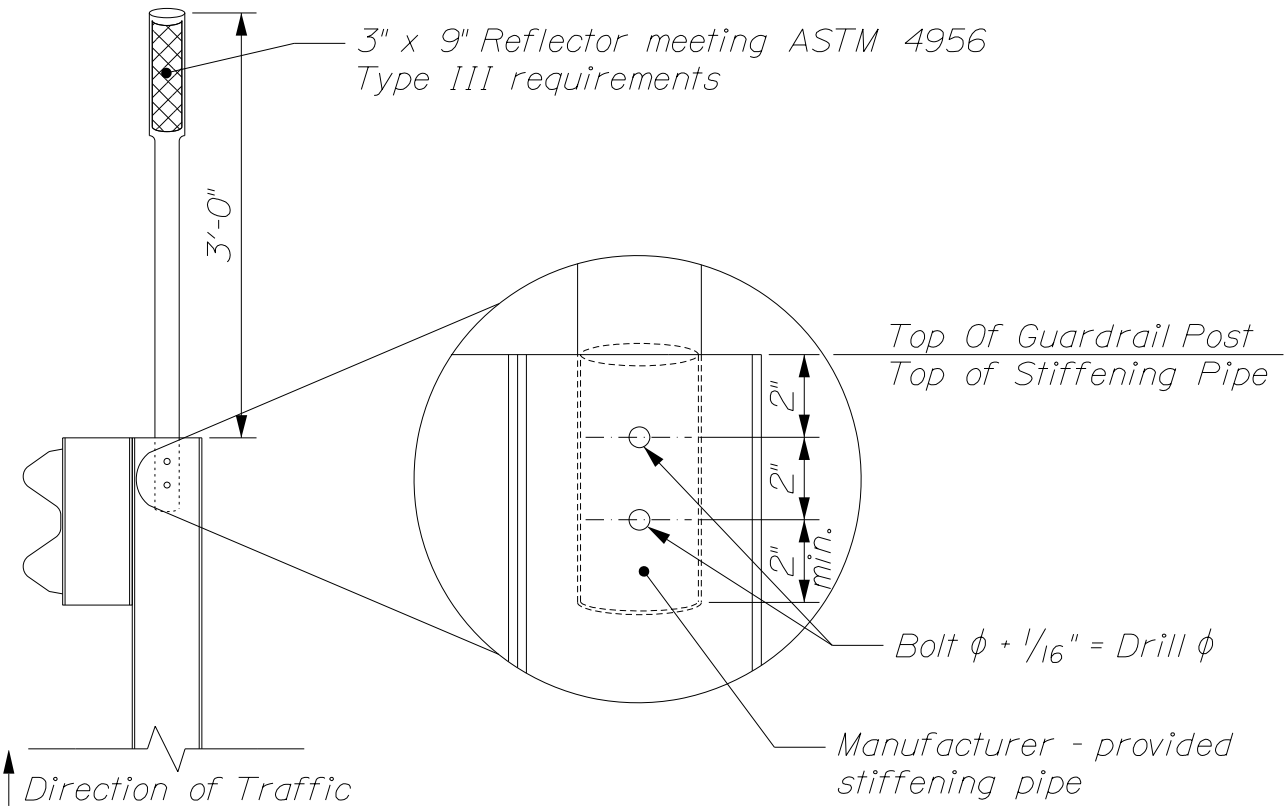

REFLECTORIZED FLEXIBLE GUARDRAIL MARKER DETAILS

606(08)

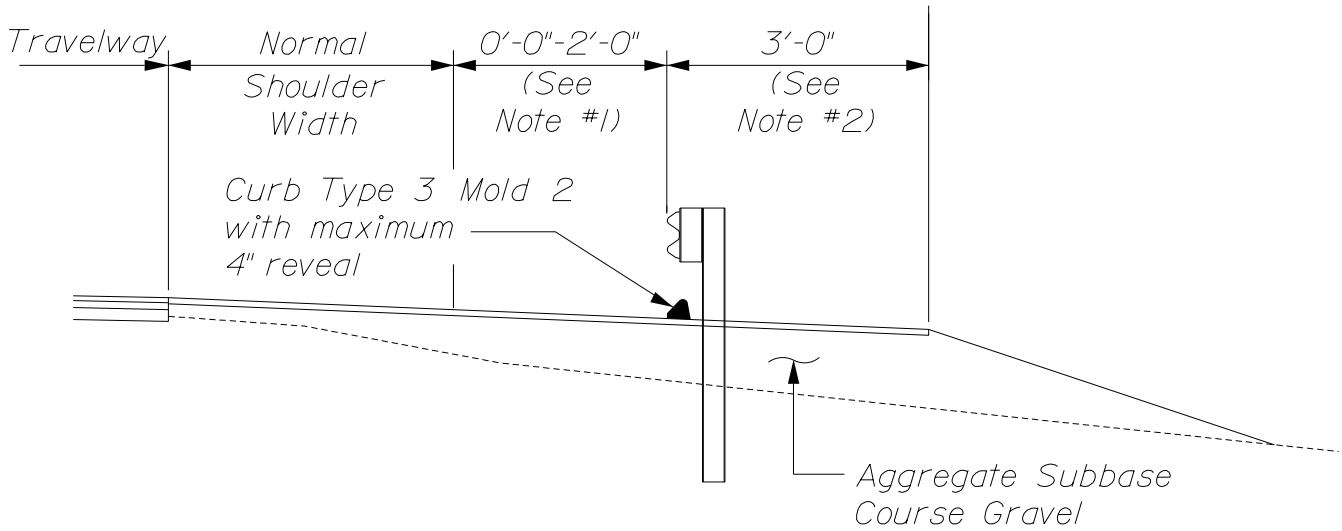

~ SECTION ~

~ NOTES ~

1. Typical barrier location should be two feet beyond the normal shoulder edge, or 16 feet from centerline.

2. A minimum of three feet shall be provided between the face of the barrier and the break in a fill embankment. When impacts are an issue, a two foot space may be used, but eight foot guardrail posts are required.

3. Curb should be placed in front of guardrail only when necessary for drainage purposes. The face of the curb should be flush with the face of the guardrail. Curb shall have a maximum 4" reveal.

4. Curb shall not be placed in front of guardrail terminals unless approved by the Project Manager.

GUARDRAIL AND CURB PLACEMENT

606(10)

GUARDRAIL FLARED TERMINAL GRADING

606(11)

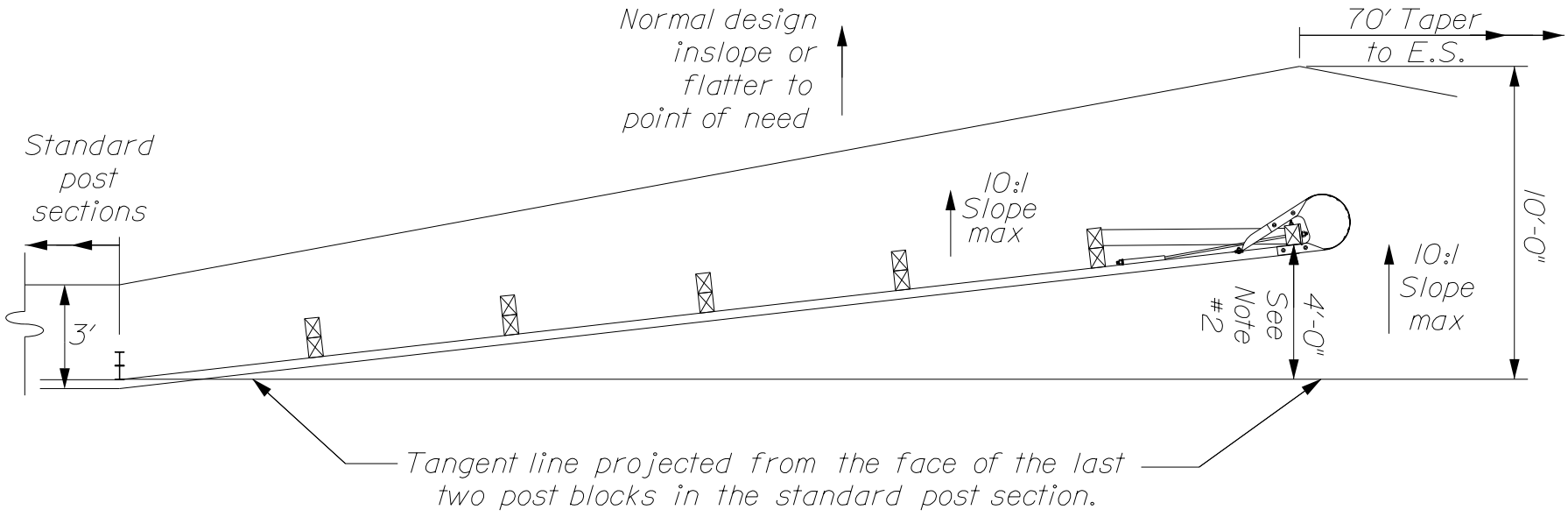

NOTES:

1. Post layout and Spacing will vary based on the terminal system that's selected. Refer to MFG Specifications for detailed layout and grading requirements.

2. Use a 4'-0" offset when allowed by the manufacturer. Otherwise, use the maximum offset allowed by the manufacturer.

GUARDRAIL TANGENT TERMINAL GRADING

606(12)

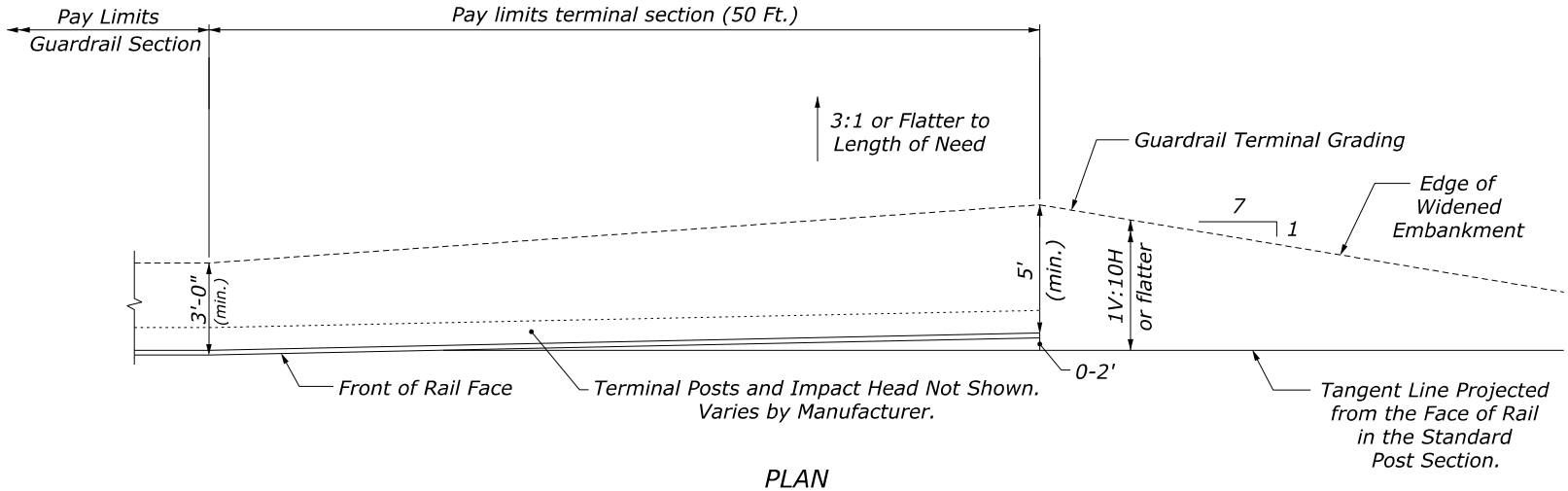

PLAN

PREFERRED GRADING

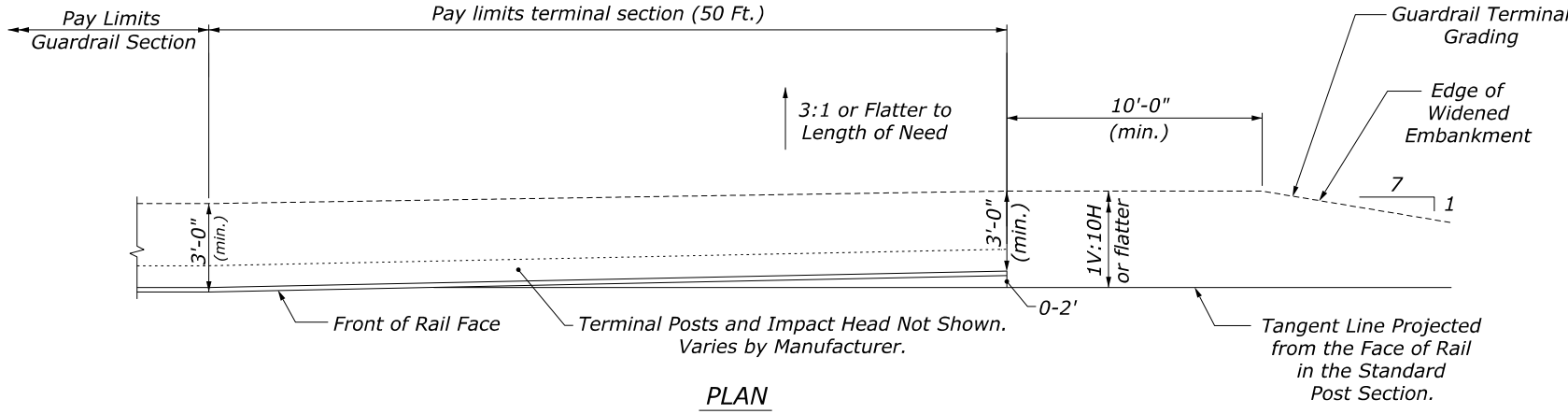

PLAN

ALTERNATIVE GRADING

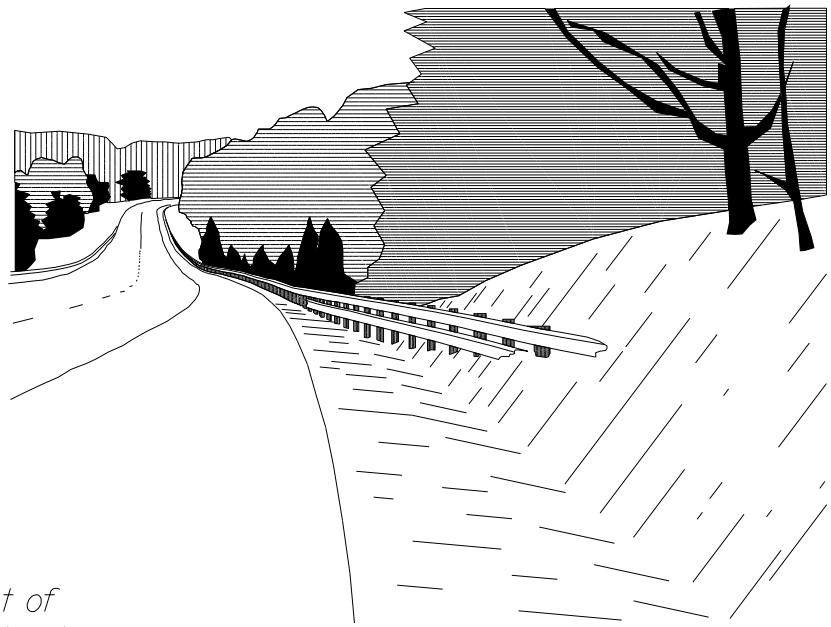

Point of standard offset

~ PERSPECTIVE ~

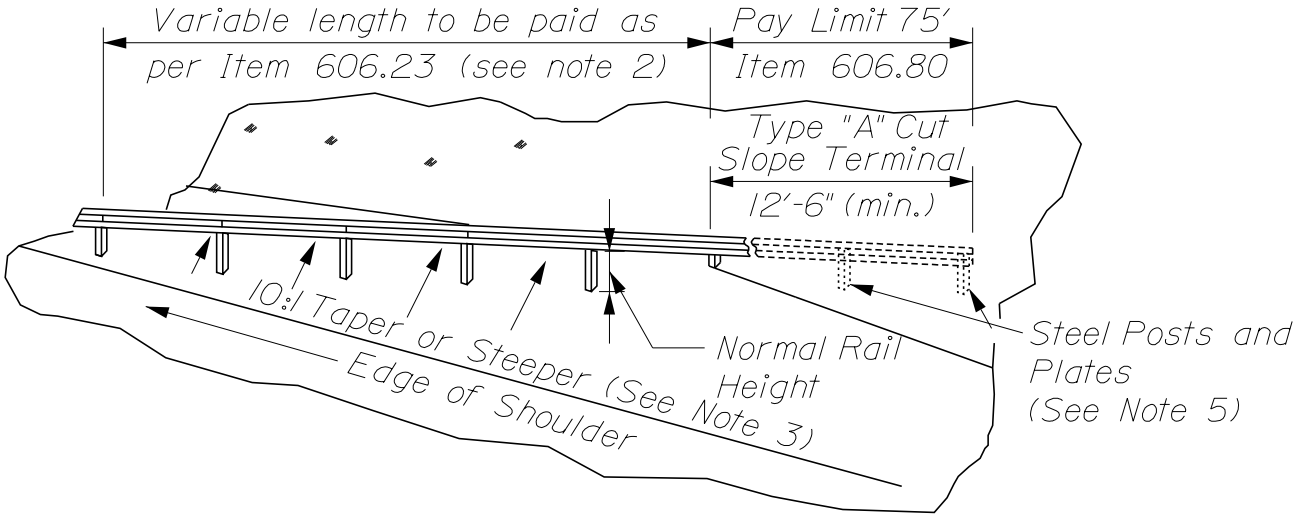

~ TYPE A (SOFT SHALE OR SOIL) TERMINAL ~

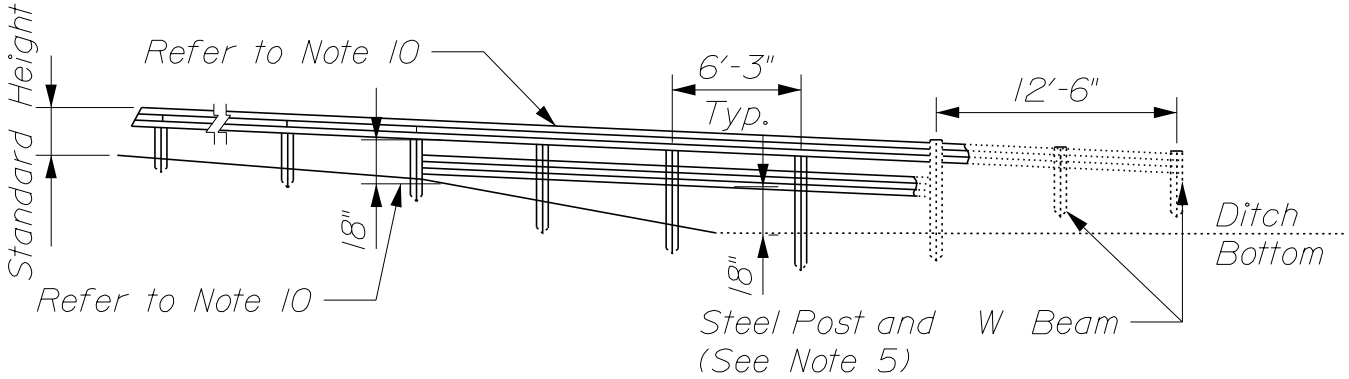

~ ELEVATION ~

BURIED BACKSLOPE GUARDRAIL TERMINAL

606(13)

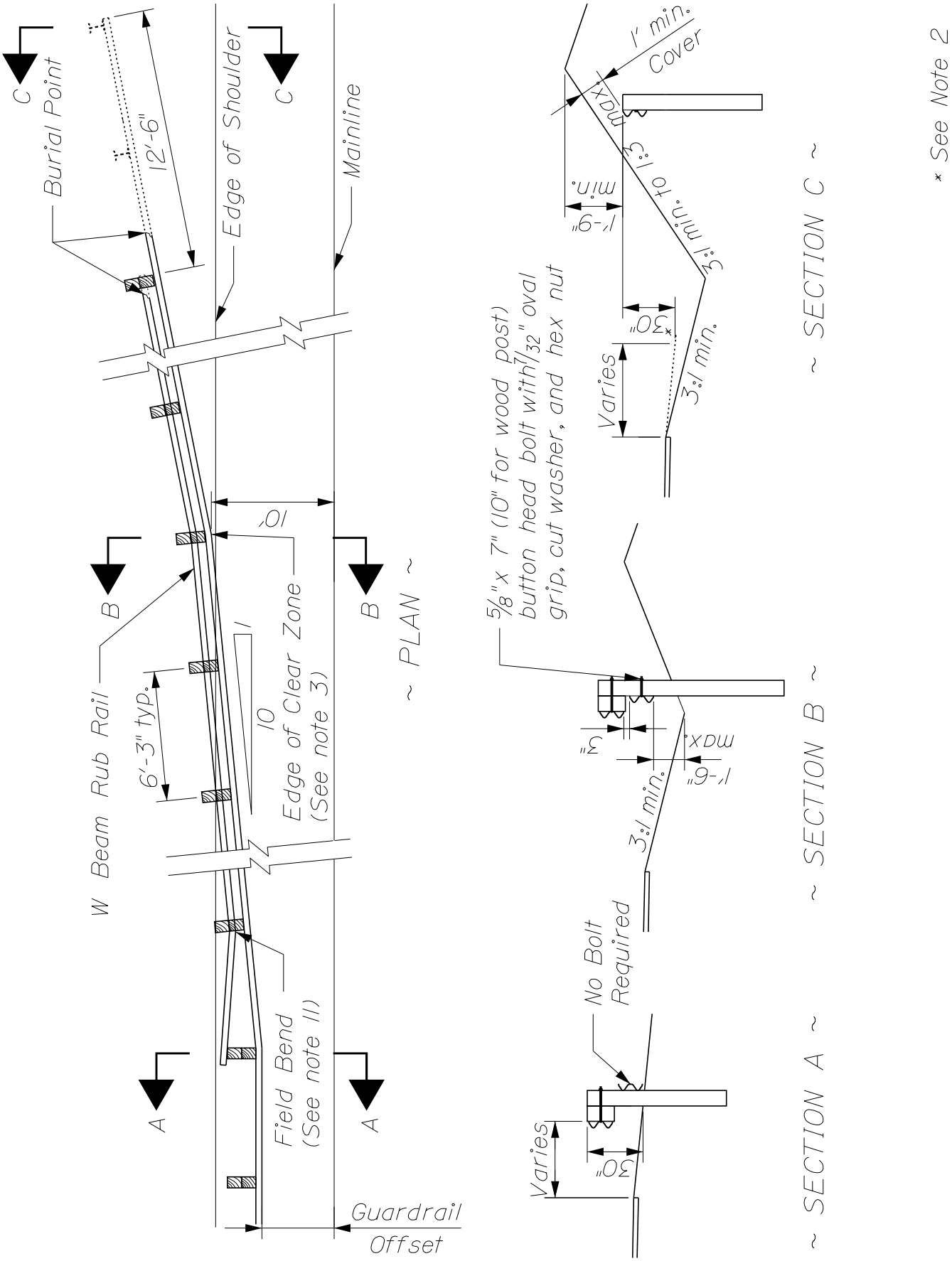

BURIED IN BACKSLOPE GUARDRAIL TERMINAL

606(14)

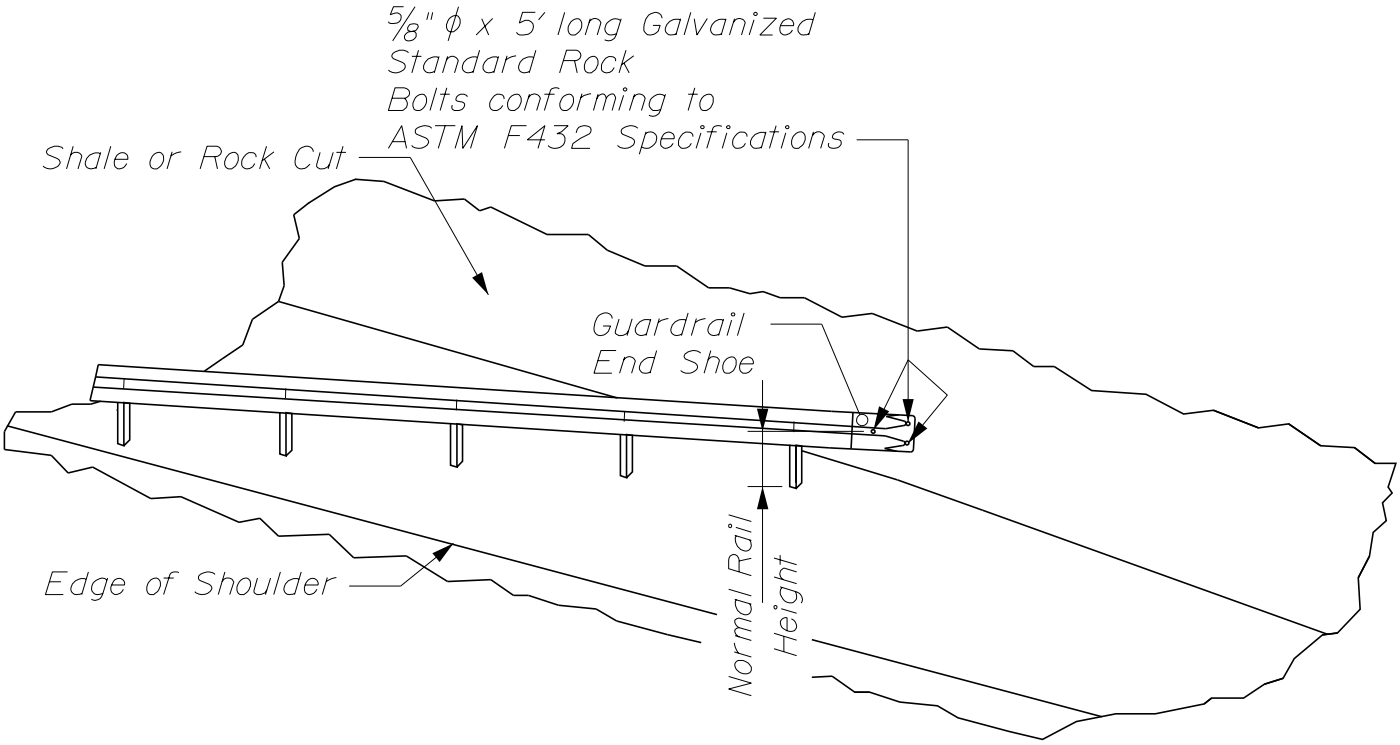

~ TYPE B (SHALE OR ROCK) TERMINAL INSTALLATION ~

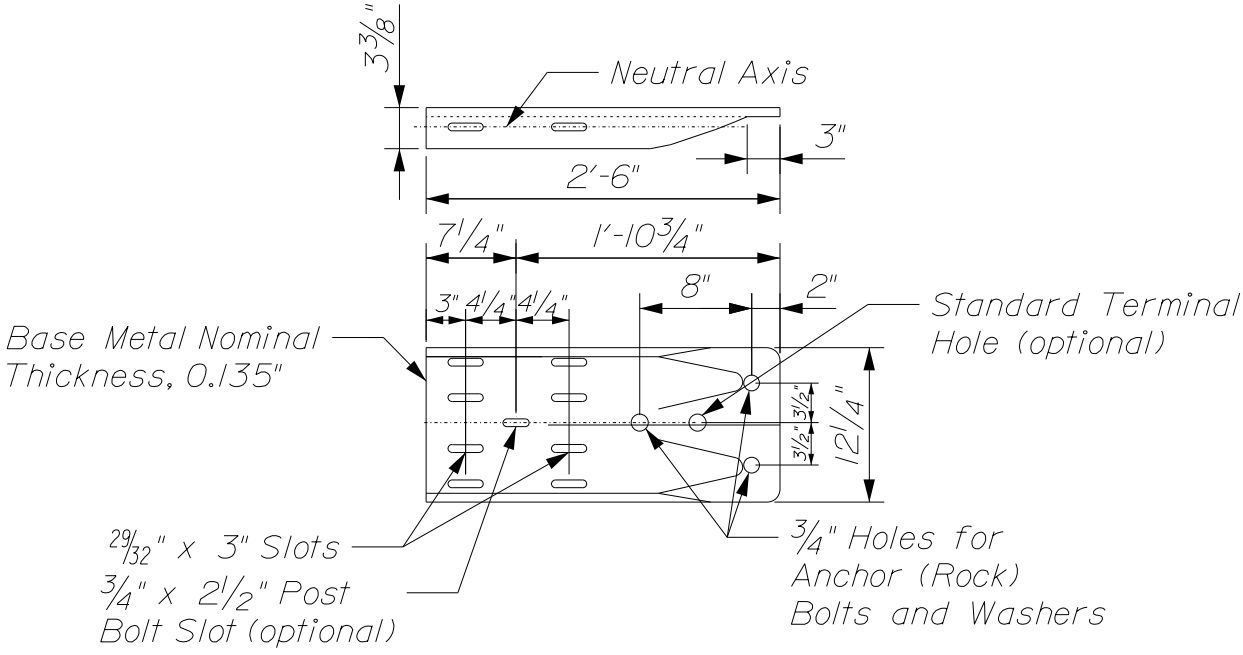

~ GUARDRAIL END SHOE DETAIL ~

GUARDRAIL TERMINAL ATTACHMENT TO LEDGE

606(15)

NOTES

1. Prior to placing guardrail, a final check of existing conditions will be made by the project resident and any adjustment necessary to ensure the proper functioning of the guardrail for the purpose for which it is intended will be made accordingly.

2. Extra length posts and W beam rub rail required within the pay limit of Item #606.80 shall be considered incidental.

3. Extra W Beam Rub Rail required outside of the pay limit of Item #606.80 will be paid with guardrail Item (606.178 Guardrail Beam).

4. Extra length posts, if needed, outside the pay limit of Item 606.80 shall be incidental to Item 606.23.

5. The flare taper rate of the guardrail may be steepened after crossing the clear zone point to shorten the length of the terminal.

6. Type (A) (soil) cut slopes terminal guardrail shall be that guardrail which
   - is to extend a minimum of two 6'-3" spans into the cut slope, from the first post beyond the toe of the cut slope, as detailed herein
   - is to terminate a minimum of 1'-0" below the ground elevation of the back slope.

7. In the buried portion of the terminal, posts shall be galvanized steel. Wood posts and blocks may be used for the remainder of the terminal.

8. The Contractor shall so arrange his work sequence to provide that each Type (A) and (B) Terminal End shall be installed concurrently with the placement of each section of beam rail including backfilling and shaping of the disturbed slope.

9. Type (B) (shale or rock) Terminal installation shall consist of anchoring the guardrail against the face of the exposed rock using guardrail end shoes as detailed herein.

10. The final decision as to the type of cut slope terminal installation Type (A) or (B) at each location will be based on the actual materials encountered during construction.

11. Buried end terminals, both Type (A) and (B), will be paid as Item #606.80 complete in place.

12. All labor, equipment, and materials necessary for the terminal end installation including but not limited to excavation, backfilling, and slope shaping will be considered incidental to Item #606.80.

13. Hold the top guardrail element constant with the typical barrier installation:
    - When the bottom of the top of guardrail element exceedes 18" in height, at any point of the slope, go up stream 1 post and add a bottom rail element under the standard guardrail element.
    - When the top of the installation exceeds 45" from the ground, at any point in the installation, then both elements will be sloped down to maintain a maximum height of 45" in front of the toe of slope.

14. Bend the downstream end of the bottom rail to the backside of the post and bolt to posts. Use 96" long posts, wood (see note 7) or steel, width dimensions as per standard details at location requiring bottom rail element:
    - When bolt holes are field drilled, zinc rich paint (cold galvanization) shall be applied to all disturbed surfaces prior to bolt installation.

BURIED IN BACKSLOPE/ATTACHMENT TO LEDGE GUARDRAIL TERMINALS

606(16)

MIDWAY SPLICE GUARDRAIL TRANSITION

606(17)

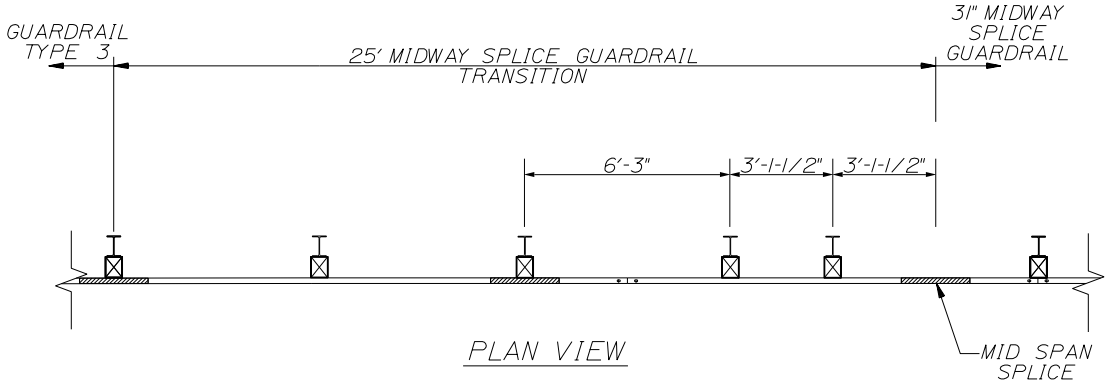

PLAN VIEW

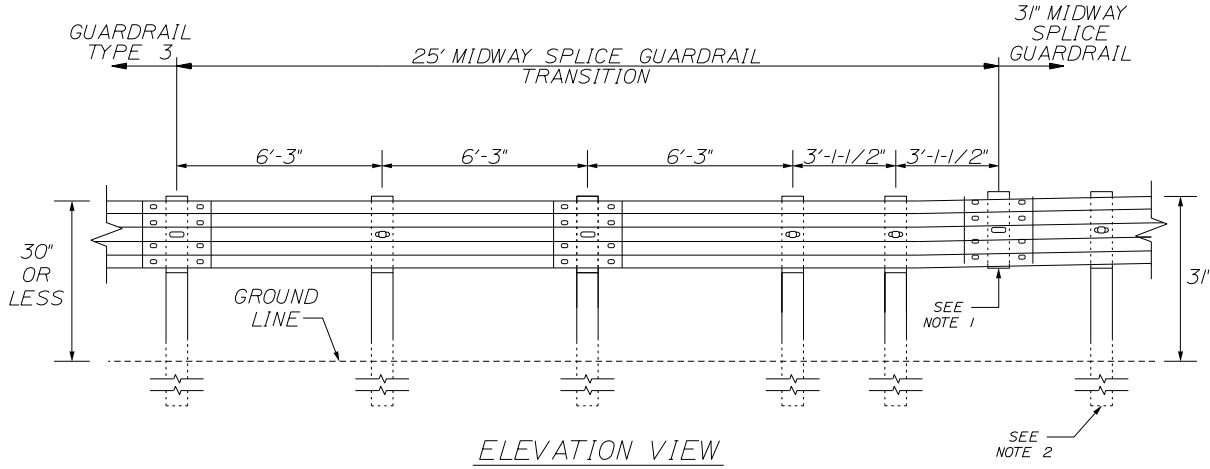

ELEVATION VIEW

TRANSITION FROM 28 INCH GUARDRAIL TO 31 INCH MGS

NOTES

1. WHEN ATTACHING A 31" GUARDRAIL TERMINAL TO GUARDRAIL TYPE 3 THIS SPLICE WILL BE THE FIRST SPLICE AT OR BEYOND THE LIMITS OF THE TERMINAL. THE ENTIRE TRANSITION WILL TAKE PLACE BEYOND THE LIMITS OF THE GUARDRAIL TERMINAL.

2. WHEN ATTACHING A 31" GUARDRAIL TERMINAL TO GUARDRAIL TYPE 3 THIS POST WILL BE POST 8 OR BEYOND, UNLESS OTHERWISE SPECIFIED BY THE MANUFACTURER.

3. A 9'-4 ½"GUARDRAIL BEAM MAY BE USED IN PLACE OF THE ADDITIONAL POST AS DIRECTED BY THE RESIDENT. POST SPACING WILL NEED TO BE ADJUSTED ACCORDINGLY.

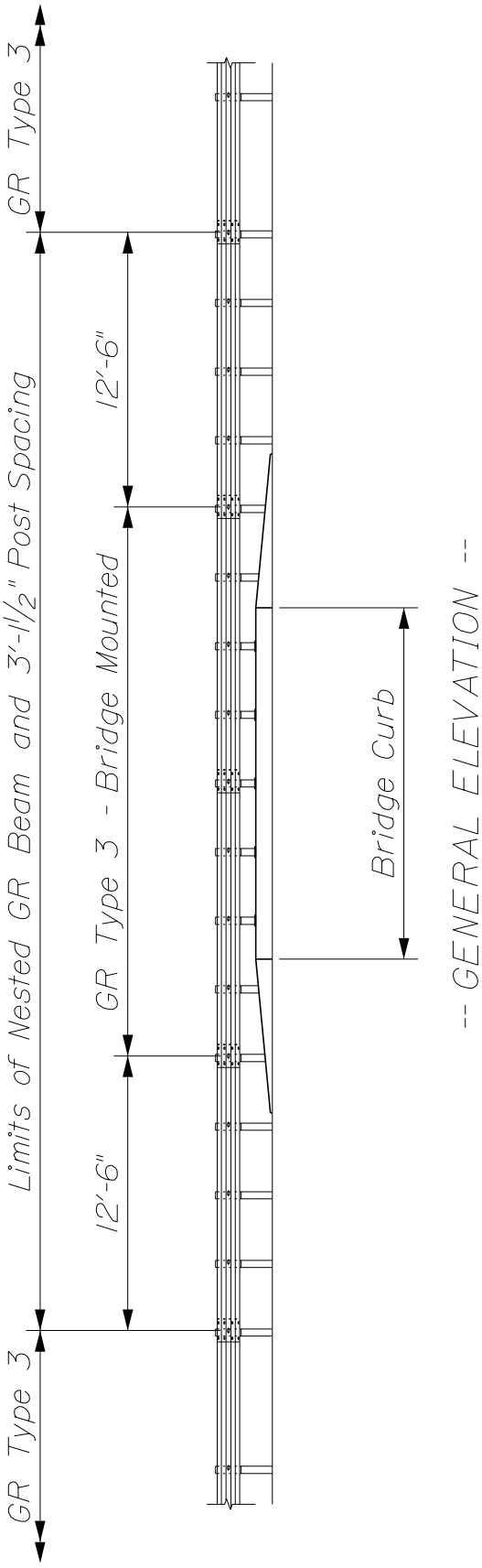

-- GENERAL ELEVATION --

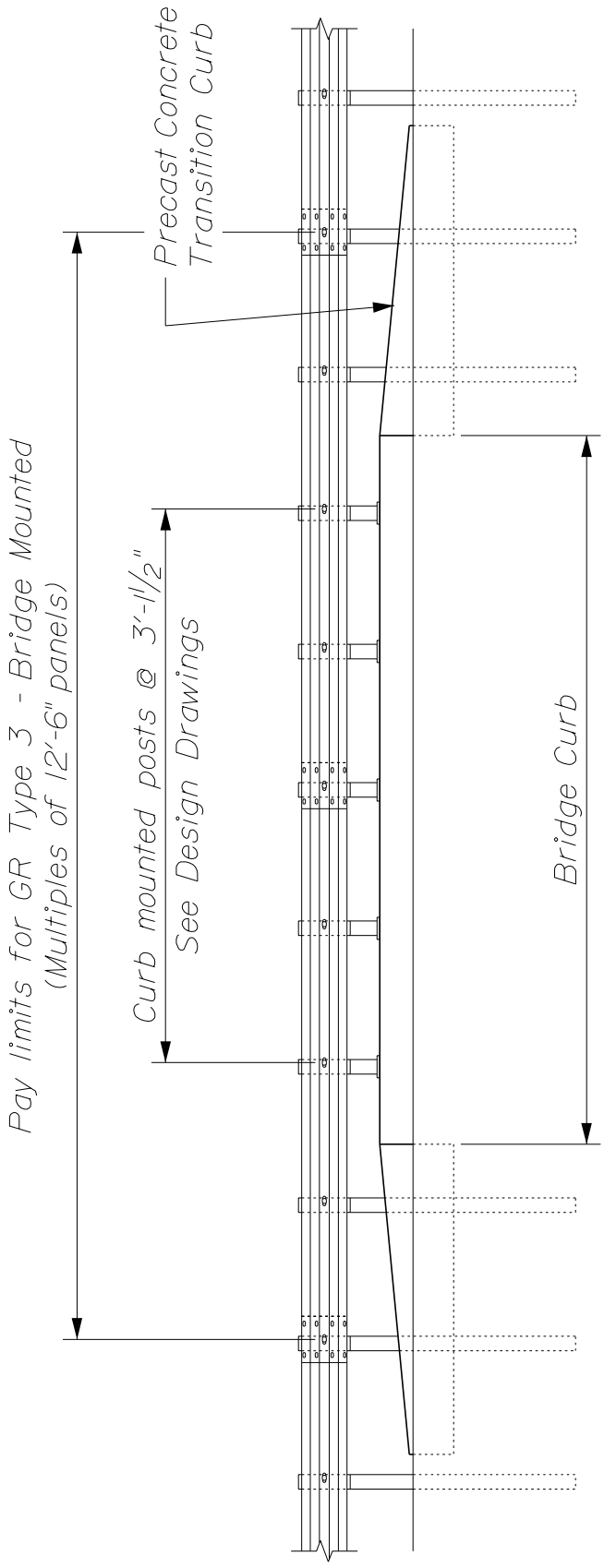

-- DETAILED ELEVATION --

GUARDRAIL TYPE 3 - SINGLE RAIL BRIDGE MOUNTED

606(18)

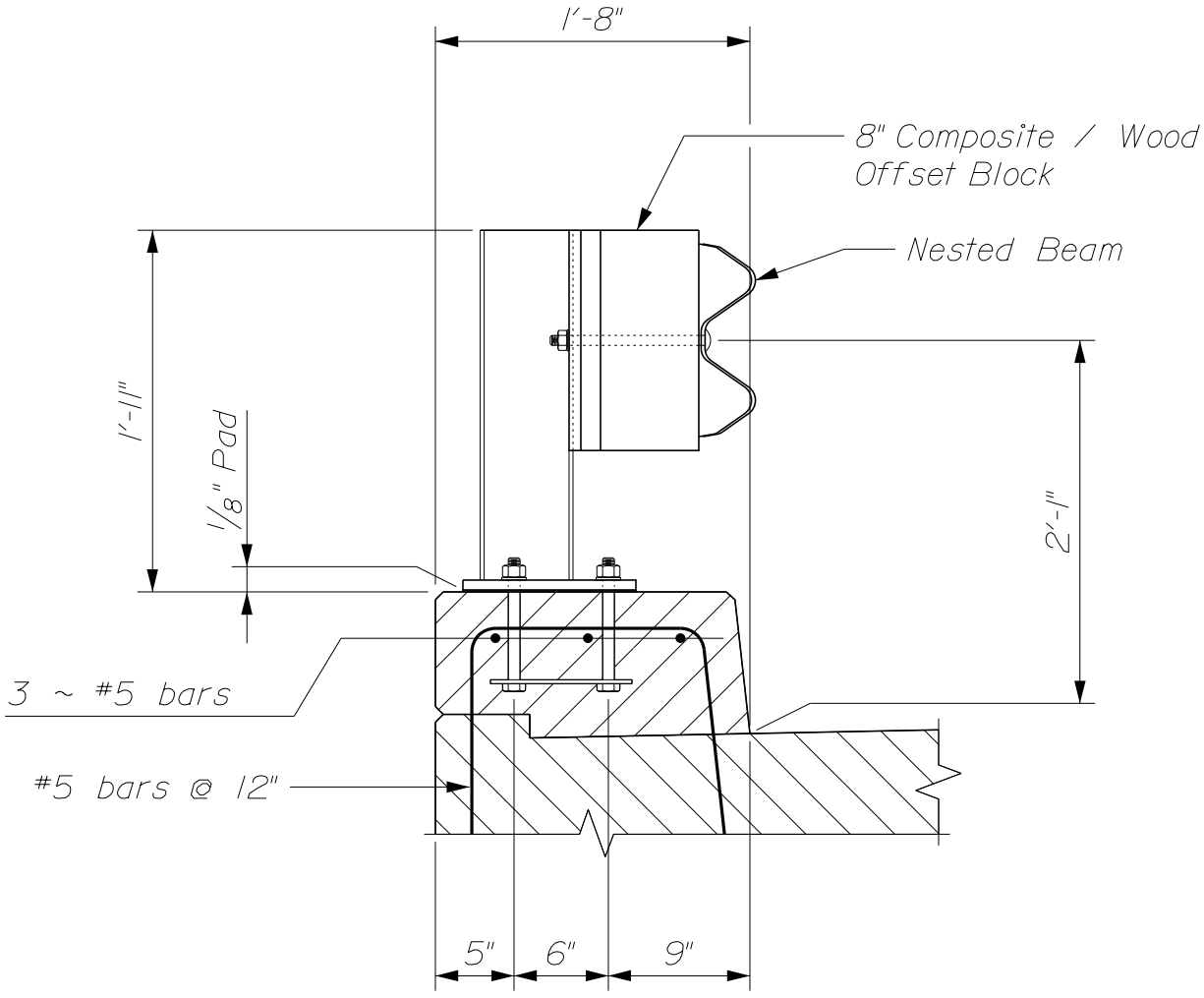

-- TYPICAL RAIL SECTION --

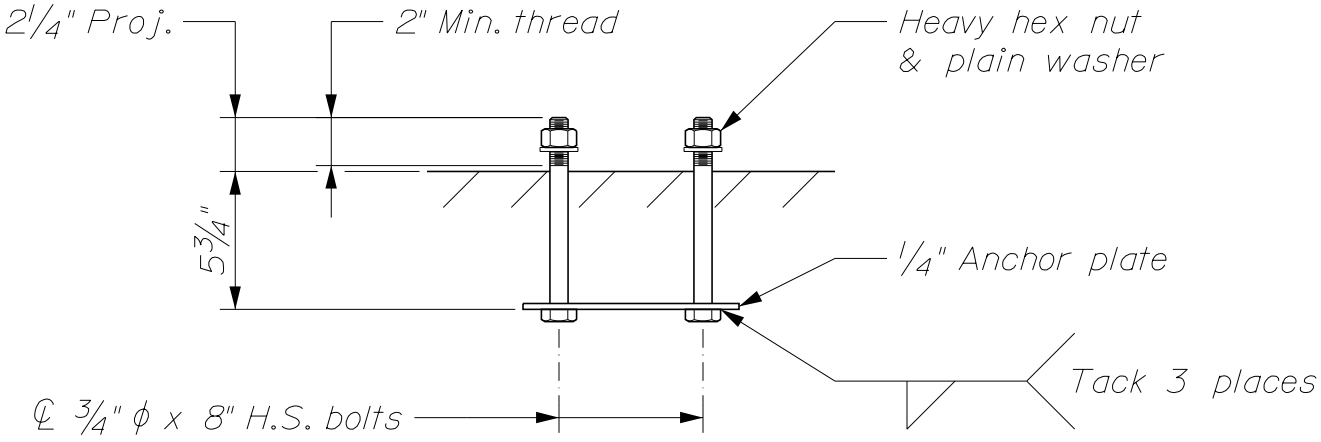

-- ANCHOR BOLT DETAIL

GUARDRAIL TYPE 3 - SINGLE RAIL BRIDGE MOUNTED

606(19)

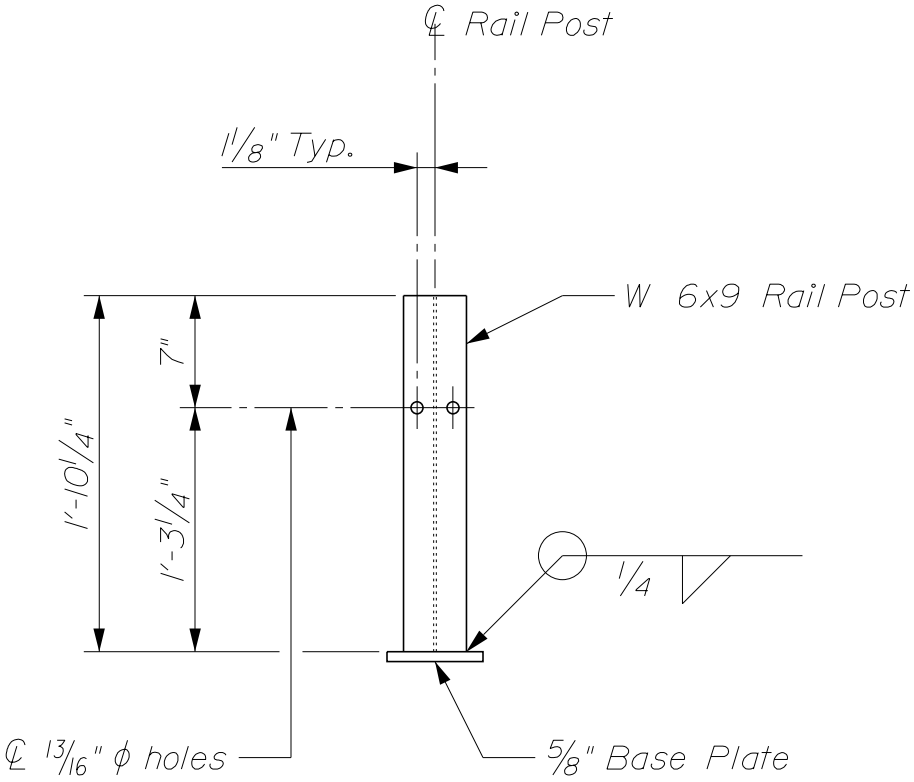

-- RAIL POST ELEVATION --

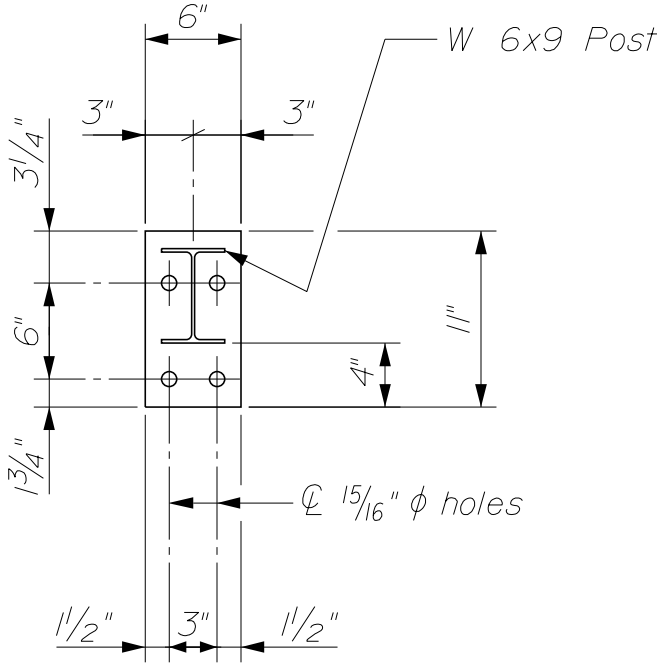

-- BASE PLATE PLAN --

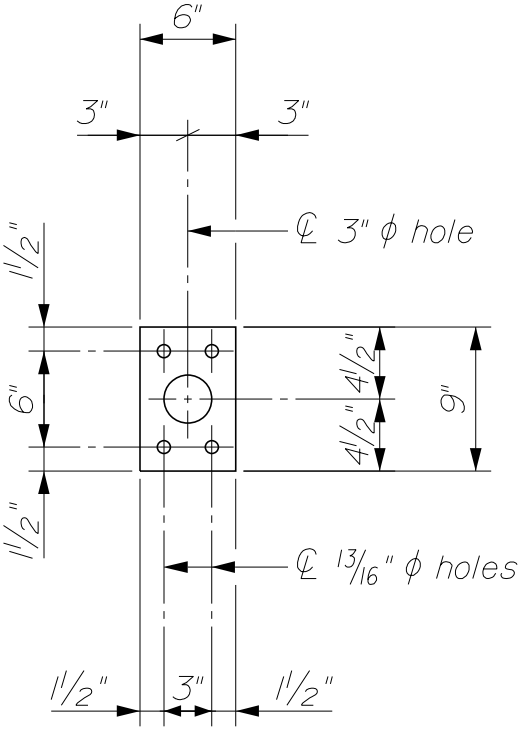

-- ANCHOR PLATE PLAN --

GUARDRAIL TYPE 3 - SINGLE RAIL BRIDGE MOUNTED

606(20)

NOTES:

1. All work and materials shall conform to the provisions of Section 507 - Railings and Section 606 - Guardrail of the Standard Specifications, as applicable.

2. All exposed cut or sheared edges shall be broken and free of burrs.

3. Curb mounted posts shall be set normal to grade unless otherwise shown.

4. Composite / wood offset blocks shall match those of the associated highway guardrail system.

5. Perform non-destructive testing per Section 504. Acceptance criteria shall be in accordance with the latest edition of the AWS D1.5 Bridge Welding Code.

6. All non - stock parts shall be galvanized after fabrication in accordance with ASTM A 123, except that hardware shall meet the requirements of either ASTM A 153 or ASTM B 695, Class 50, Type I. Parts except hardware shall be blast - cleaned prior to galvanizing in accordance with SSPC - SP6.

7. Anchor bolts shall be set with a template. Nuts securing the post base shall be tightened to a snug fit and given an additional 1/8 turn.

8. Nested guardrail beam and extra posts beyond the pay limits of the Bridge - Mounted Guardrail will be paid for as twice the required length of Guardrail Type 3 - Single Rail.

9. For details of the Concrete Transition Curb, refer to Standard Detail 609(08), Precast Concrete Transition Curb.

MATERIALS:

Guardrail Beam, Composite / Wood Offset Blocks & Posts	See Standard Specifications Section 710
Base Plate & Anchor Plate	AASHTO M 270M/M 270, Grade 250 (36) ASTM A 709/A 709M, Grade 36 (250)
Anchor bolts	ASTM A 449 or ASTM A 1554, Grade 55
Anchor bolt washers / nuts	ASTM F 436 / ASTM A 563

GUARDRAIL TYPE 3 - SINGLE RAIL BRIDGE MOUNTED

606(21)

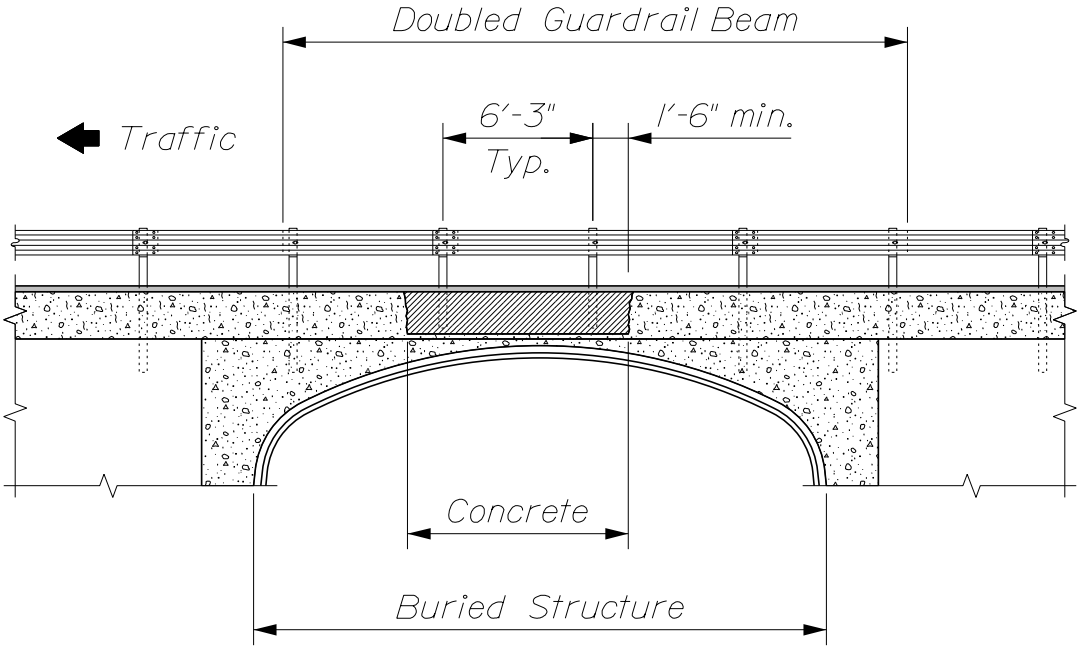

~ ELEVATION ~

NOTES:

1. Guardrail posts interfering with a buried structure shall be cut to length in the field and cast into a concrete base as shown. The concrete may be placed directly into a trench excavated in the subbase material. The concrete mix shall be Class "A". Payment will be considered incidental to the guardrail pay items.

2. Only galvanized steel posts are to be used for this application.

3. The guardrail beam shall be doubled at least one space beyond the limits of the cut posts. Any extra beam length shall be installed toward the leading end of the guardrail. Payment will be considered incidental to the guardrail pay items.

4. Payment for any hand work required to place pavement in this area will be considered incidental to the paving items.

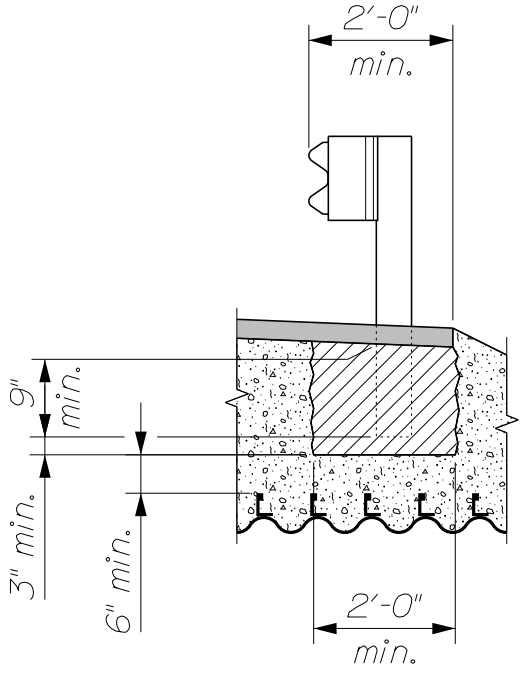

~ GUARDRAIL SECTION ~

GUARDRAIL TREATMENT OVER BURIED STRUCTURES

606(22)

STANDARD BRIDGE TRANSITION - TYPE "I"

606(23)

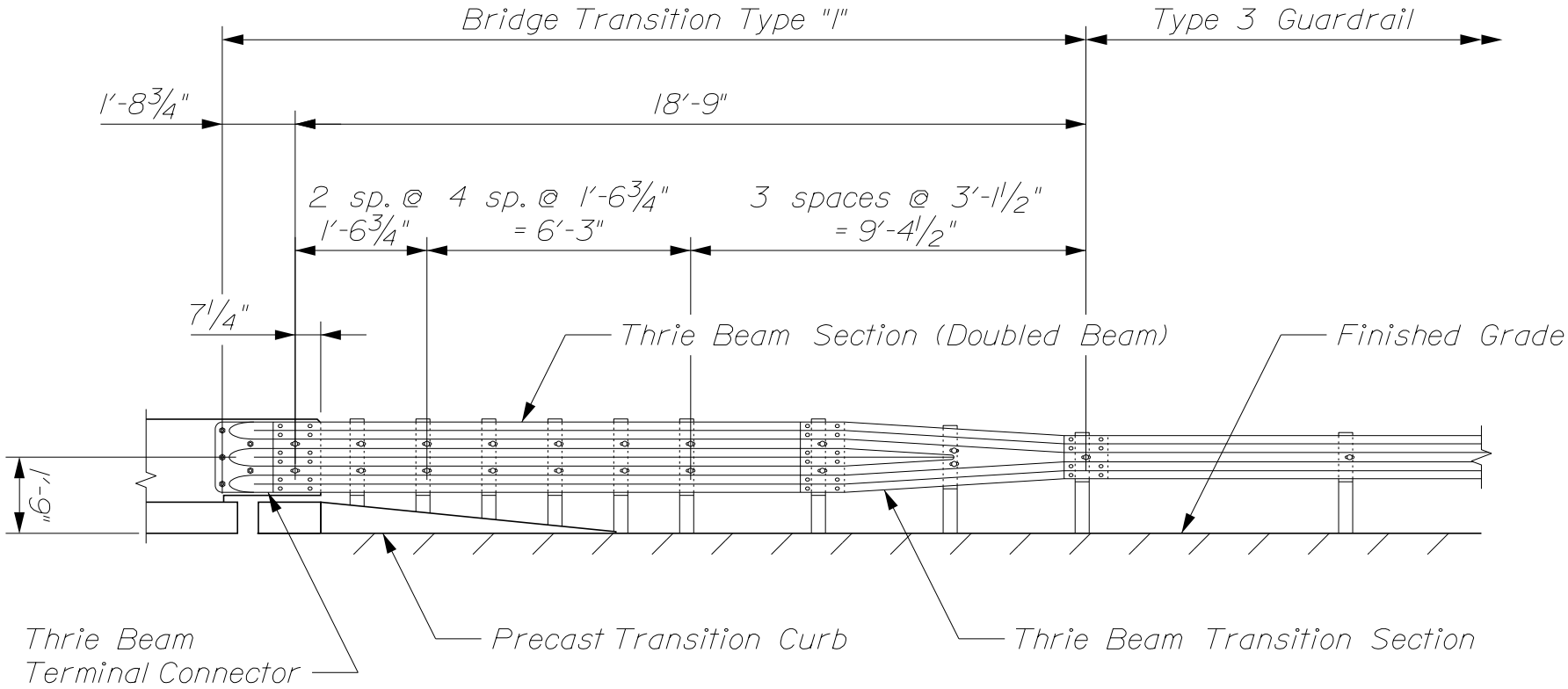

~ BRIDGE TRANSITION TYPE "I" ~

NOTE: Part designations are shown in "A Guide to Standardized Highway Barrier Hardware" as prepared and approved by the AASHTO - AGC - ARTBA Joint Committee, Task Force 13 Report.

BRIDGE TRANSITION - TYPE "IA"

606(24)

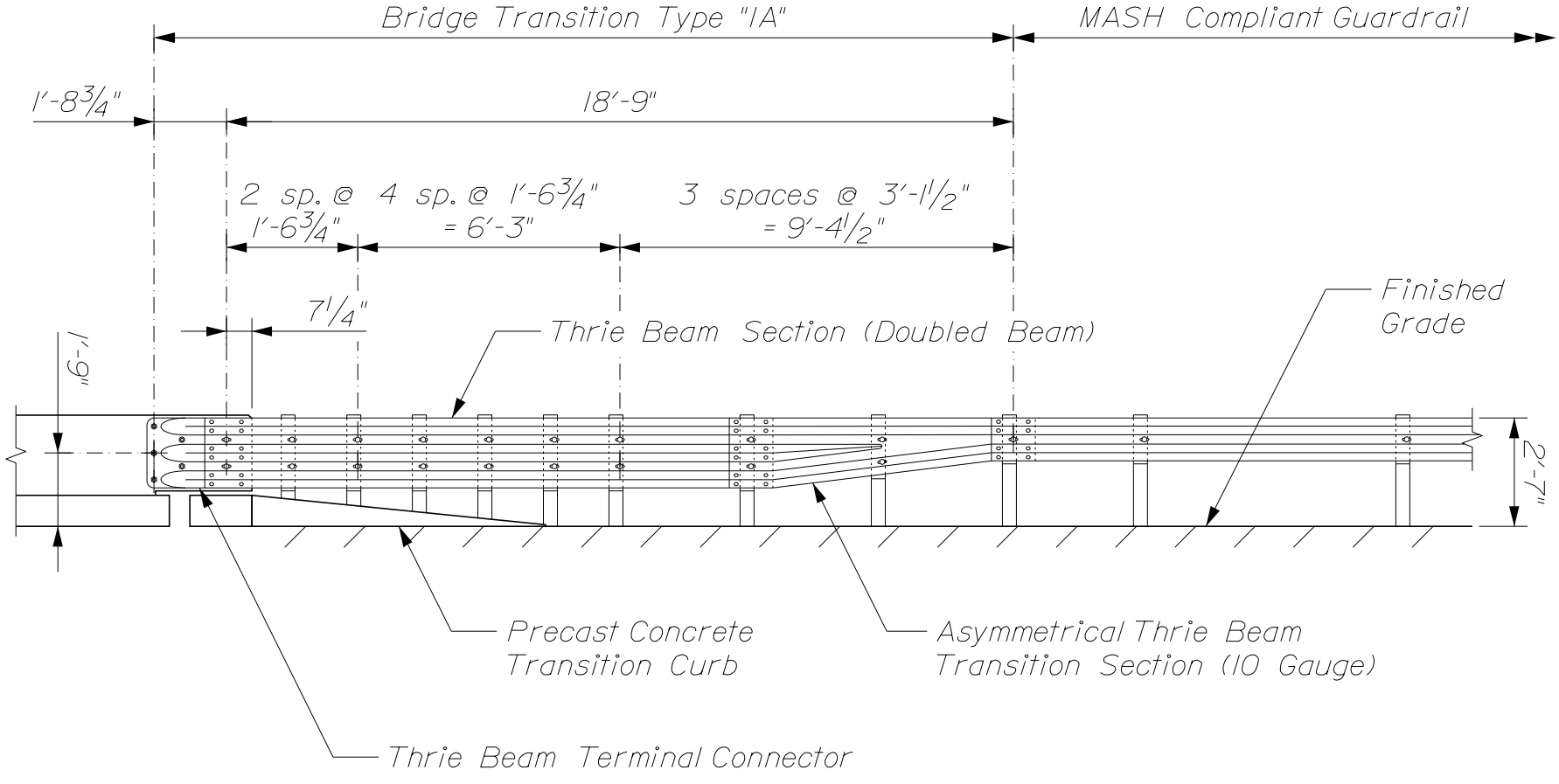

~ BRIDGE TRANSITION TYPE "IA" ~

NOTE: Part designations are shown in "A Guide to Standardized Highway Barrier Hardware" as prepared and approved by the AASHTO - AGC - ARTBA Joint Committee, Task Force 13 Report.

NON - STANDARD

BRIDGE TRANSITION - TYPE "2"

606(25)

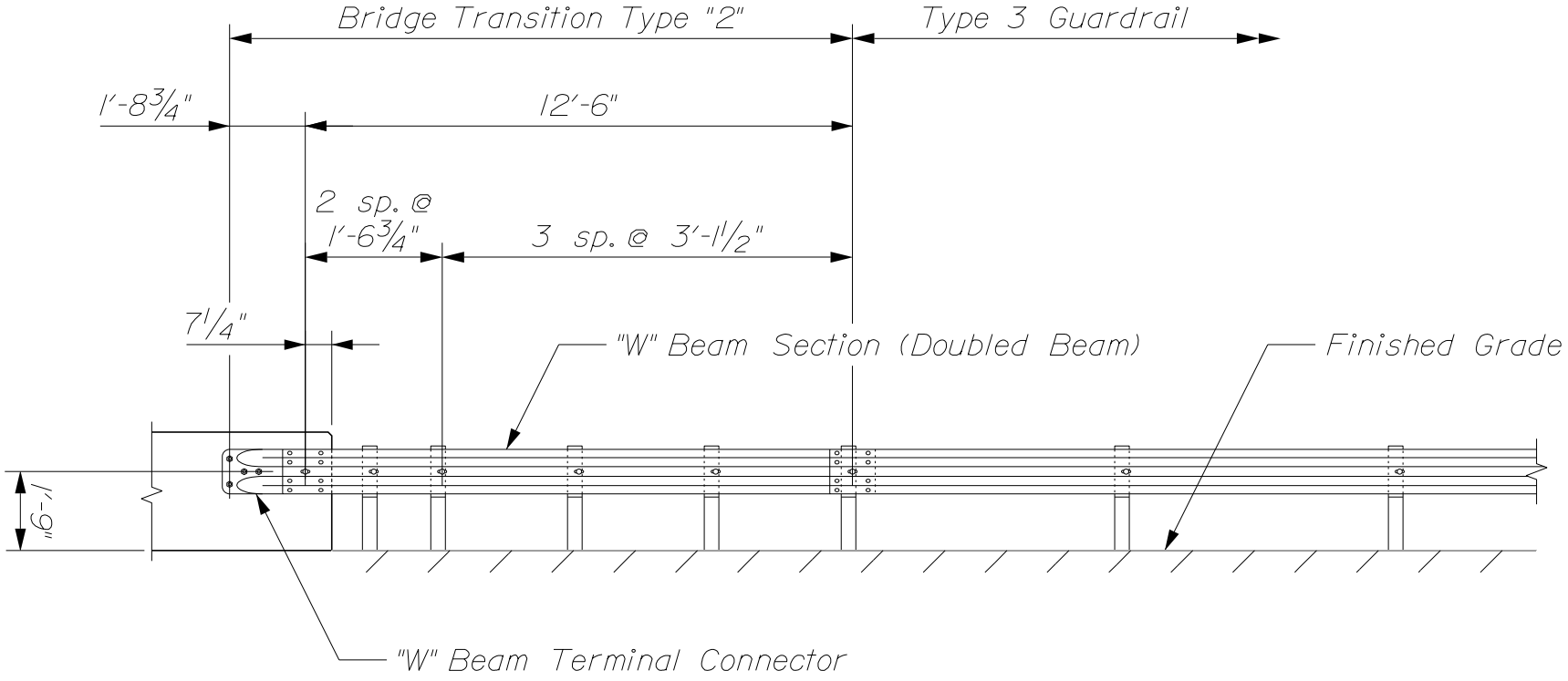

~ BRIDGE TRANSITION TYPE "2" ~

NOTES:

1. Part designations are shown in "A Guide to Standardized Highway Barrier Hardware" as prepared and approved by the AASHTO - AGC - ARTBA Joint Committee, Task Force 13 Report.

2. This design does not meet NCHRP 350 crash testing criteria.

NOTES:

1. All accessories including posts, bolts and nuts shall be as specified for standard Type 3 Guardrail, except as otherwise detailed.

2. Threaded rods, washers and nuts shall conform to AASHTO M 314, Grade 105 and shall be galvanized in accordance with AASHTO M 232.

3. After installation of the guardrail is complete, upset the threads on the threaded rods in three places around each rod, at the junction of the nut and the exposed thread, with a center punch or similar tool.

4. Payment for Terminal Connector Anchorage including threaded rods, washers, nuts and bearing plate and for field drilling holes for anchor rods will be considered incidental to the Bridge Transition item.

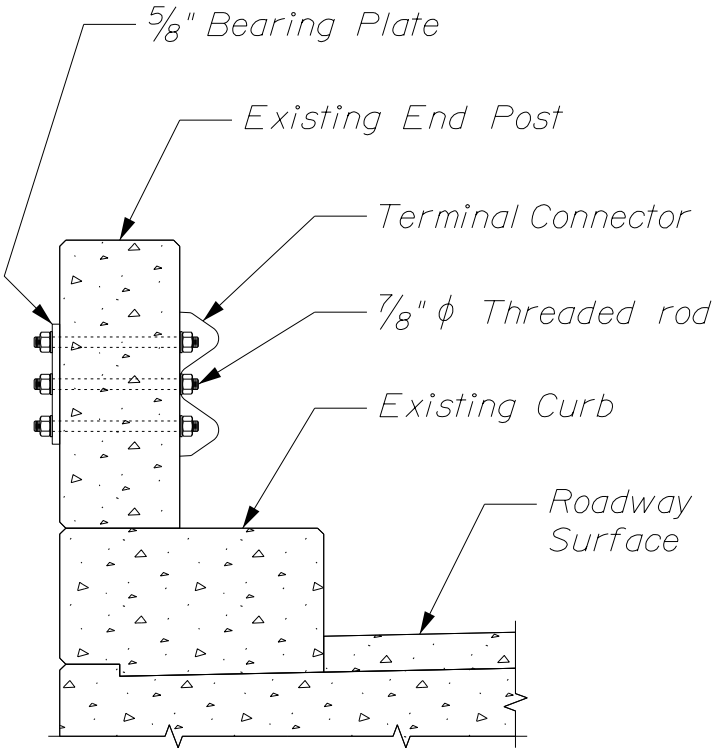

-- END POST SECTION --

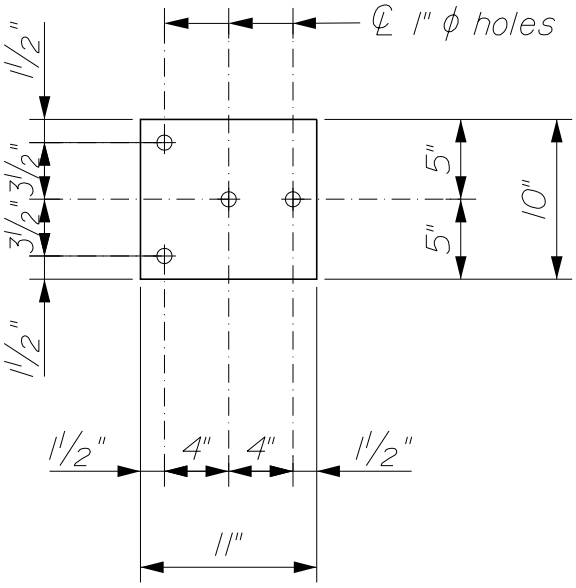

-- BEARING PLATE --

"W" BEAM TERMINAL CONNECTOR ANCHORAGE

606(26)

WOVEN WIRE FENCE	NOMINAL SIZE (inches)	SHAPE	WEIGHT (lbs./ft.)	COMMENTS
End, Intermediate, & Corner Posts	2 1/2" x 2 1/2" x 1/4"	⊿	9.04	
	2"	ϕ	8.05	Grade 1* w/Top Cap
	2"	ϕ	6.87	Grade 2* w/Top Cap
Gate Posts		⊿	15.85	
	3 1/2" x 3 1/2" x 5/16"	ϕ	12.76	Grade 1* w/Top Cap
		ϕ	10.23	Grade 2* w/Top Cap
Line Posts	----	T	2.93	Studded
	1 1/4"	ϕ	5.00	Grade 1* w/Top Cap
	1 1/4"	ϕ	4.05	Grade 2* w/Top Cap
Braces	1 3/4" x 1 3/4" x 1/4"	⊿	6.11	
	1 1/4"	ϕ	5.00	
	1 1/4"	ϕ	4.05	
CHAIN LINK FENCE	NOMINAL SIZE (inches)	SHAPE	WEIGHT (lbs./ft.)	COMMENTS
End & Corner Posts	2" I.D.	ϕ	8.05	Grade 1*
	2" I.D.	ϕ	6.87	Grade 2*
	2 1/2" x 2"	H	9.04	
	3 1/2" x 3 1/2"	⊿	11.33	Integral Loops
Line Posts	1 1/2" I.D.	ϕ	6.00	Grade 1*
	1 1/2" I.D.	ϕ	5.03	Grade 2*
	1 7/8" x 1 5/8"	H	5.95	
	1 7/8" x 1 5/8"	C	5.03	
Top & Brace Rails	1 1/4" I.D.	ϕ	5.00	Grade 1*
	1 1/4" I.D.	ϕ	4.06	Grade 2*
	1 5/8 x 1 1/4"	⊔		

* AASHTO M 181 Par. 29.1

FENCE POST, RAIL, AND BRACE OPTIONS

607(01)

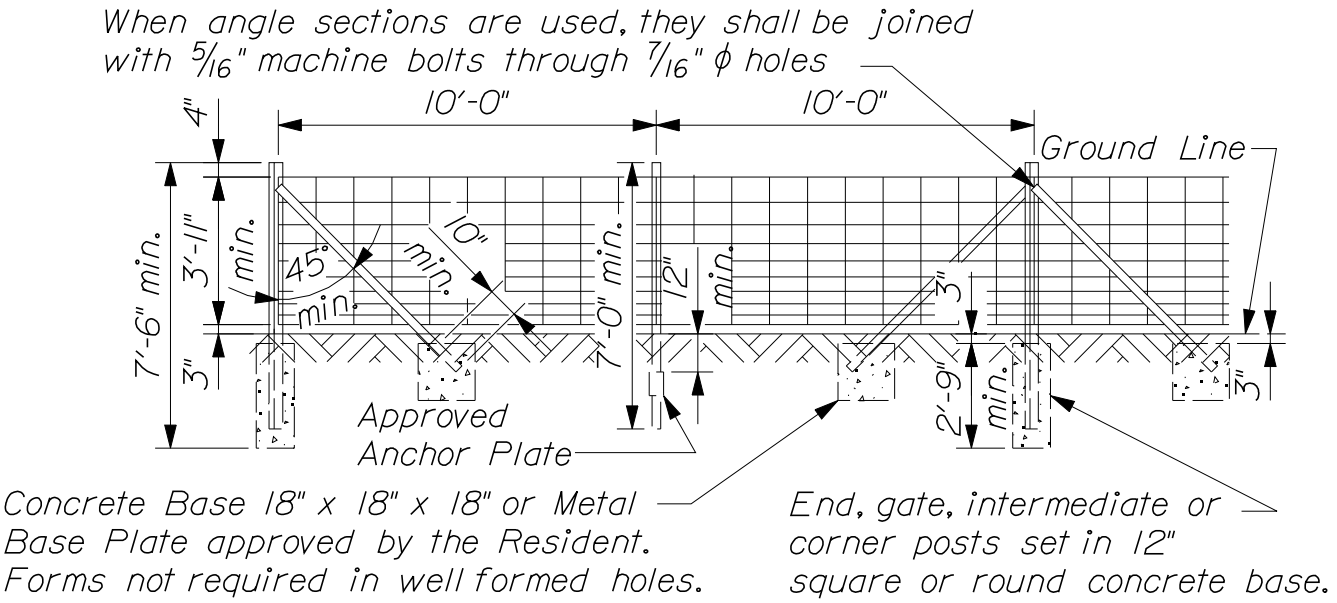

~ END OR GATE POST ~ ~ LINE POST ~ ~ INTERMEDIATE OR CORNER POST ~

~ WOVEN WIRE FENCING - METAL POSTS ~

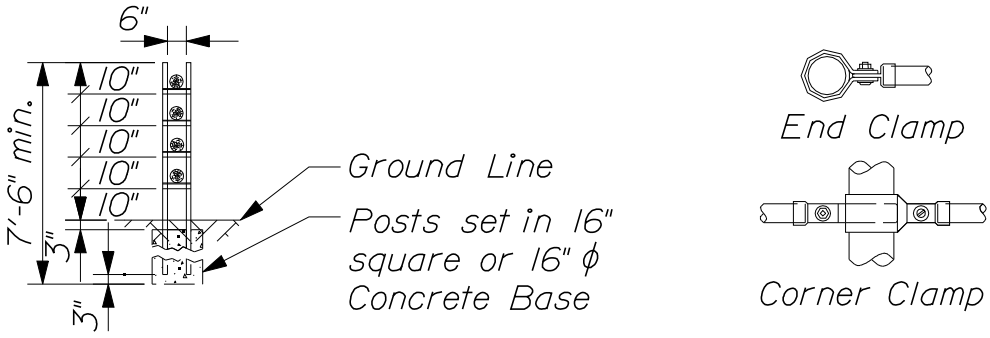

~ BARWAY ~ ~ BRACE CLAMPS - PIPE POSTS ~

NOTE:
Metal posts shall be installed for a 16'-0" opening. Barway posts and braces shall conform to the requirements of "Gate Posts" and "Braces" under "Woven Wire Fencing - Metal Posts". Cross bar supports for barways shall be 1 3/4" x 1 3/4" x 1/4" rolled angle section. When round gate posts are used, the length of the cross bar supports shall equal the center-to-center of the posts plus 2 inches and they shall be attached to the barway post with 5/16" x 4 1/4" machine bolts. When angle section gate posts are used, the length of the cross bar supports shall be equal to the out-to-out dimensions of the angle sections and shall be attached with 5/16" x 1" machine bolts.
All bracing shall conform to the requirements of "Woven Wire Fencing - Metal Posts". Cross bars shall be as required for "Barways - Wood Posts".

~ BARWAYS - METAL POSTS ~

FENCING

607(02)

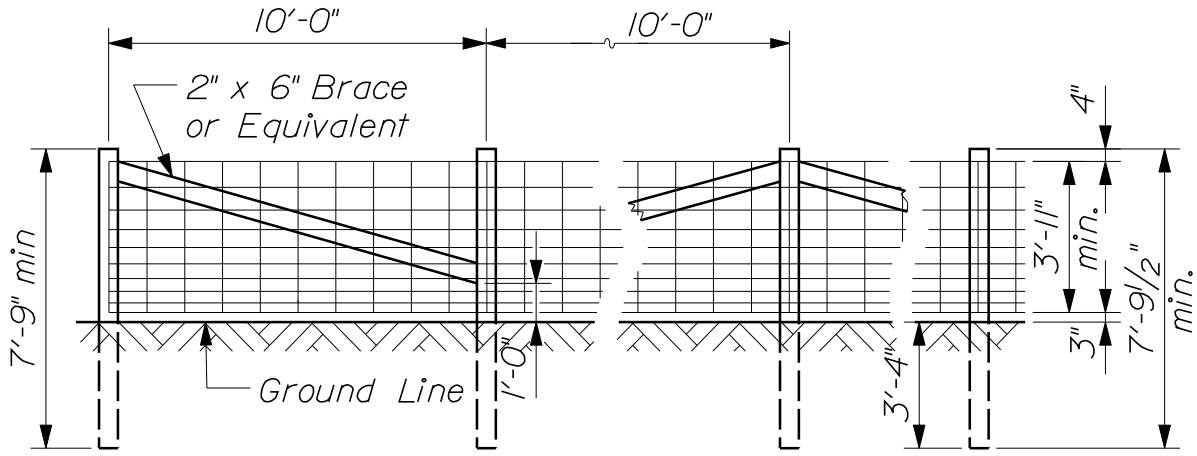

~ END OR BARWAY POST ~ ~ INTERMEDIATE OR CORNER POST ~ ~ LINE POST ~

NOTES:

1. Staples for wood posts are to be 9 Ga. 1 1/2" and placed according to the Standard Specifications.

2. All end, corner, barway, and intermediate posts shall be braced as shown.

~ WOVEN WIRE FENCING - WOOD POSTS ~

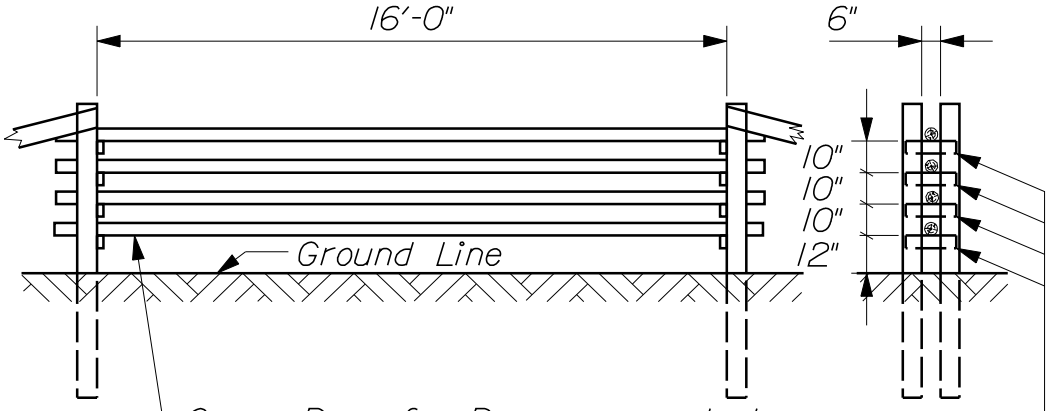

Cross Bars for Barways are to be a minimum of 4" ϕ and of a length equal to the Barway opening plus 24".

2" x 4" Cross Bar support length shall equal the center to center length of the post plus 4". Each support shall be nailed with (4) 4d penny nails.

~ BARWAYS - WOOD POSTS ~

FENCING

607(03)

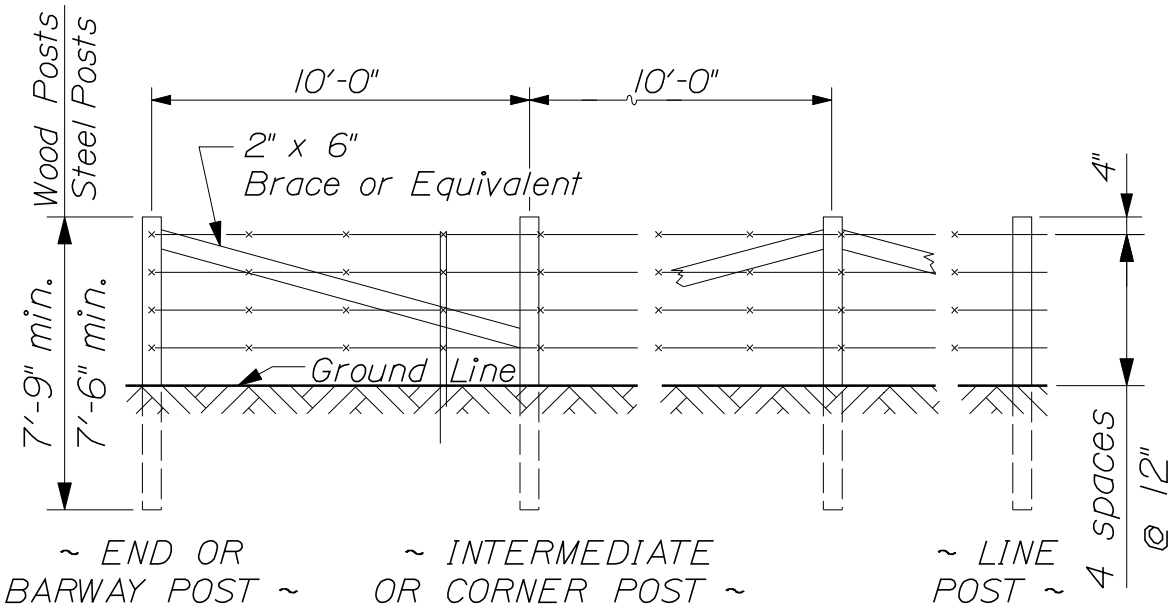

NOTE:
"Barbed Wire - Metal Posts" shall be constructed with the post and wire spacing shown above. Metal posts and braces shall conform to all of the requirements noted and shown for "Woven Wire Fencing - Metal Posts", including concrete bases.

BARBED WIRE FENCING - WOOD POSTS AND
BARBED WIRE FENCING - METAL POSTS

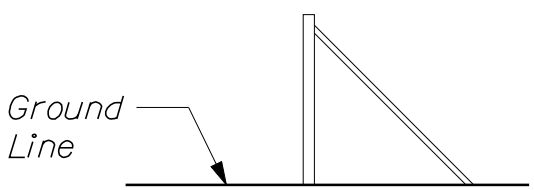

~ BRACING - TYPE I ~
used at gates, barways, and terminals

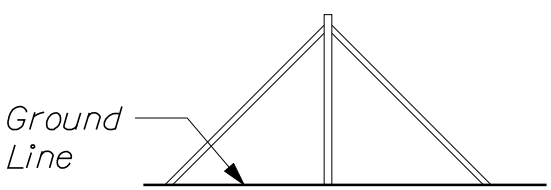

~ BRACING - TYPE II ~
used at corners, intermediate points, and changes in vertical alignment

BRACING ASSEMBLIES FOR WOVEN WIRE AND BARBED WIRE FENCING

607(04)

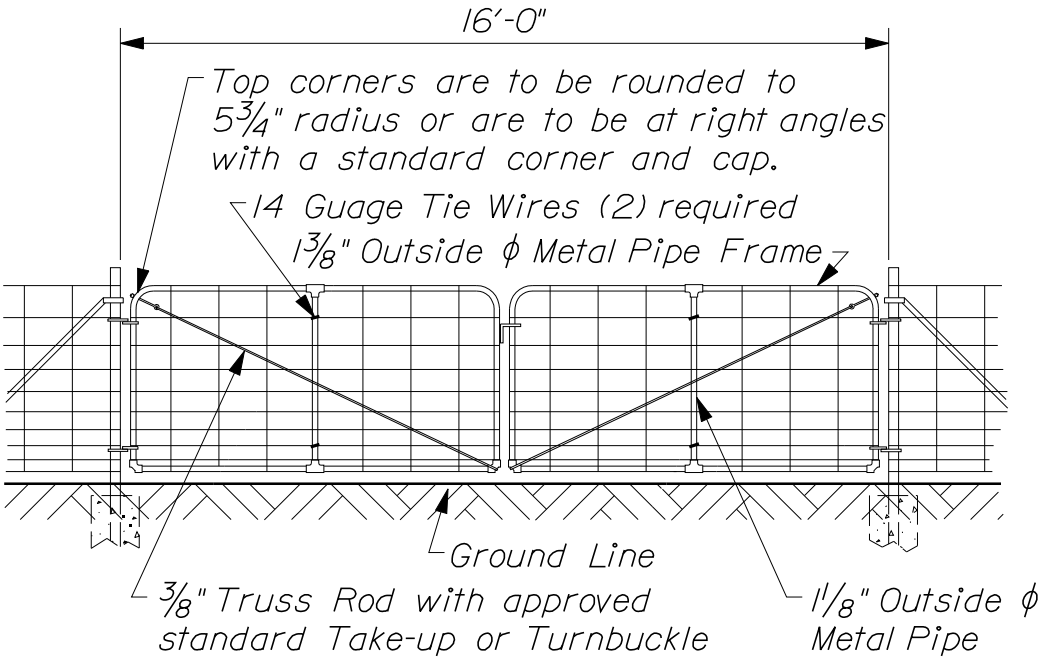

NOTES:

1. Gate posts, braces and anchorages to be as specified under "Woven Wire Fencing - Metal Posts".

2. All gates shall be installed with the top hinge point pointing down.

3. Wire for gates shall conform to A.S.T.M. A116, Class 1, Design No. 1047-12-11.

4. The required fittings for fence and gates shall be steel or malleable iron of an approved standard type.

5. Gates shall be furnished with a standard fork latch and one piece of 3/16" straight link alloy steel chain, 24" long. One end shall be attached to the gate frame and attached to the other end shall be a snap lock or other approved fastening device.

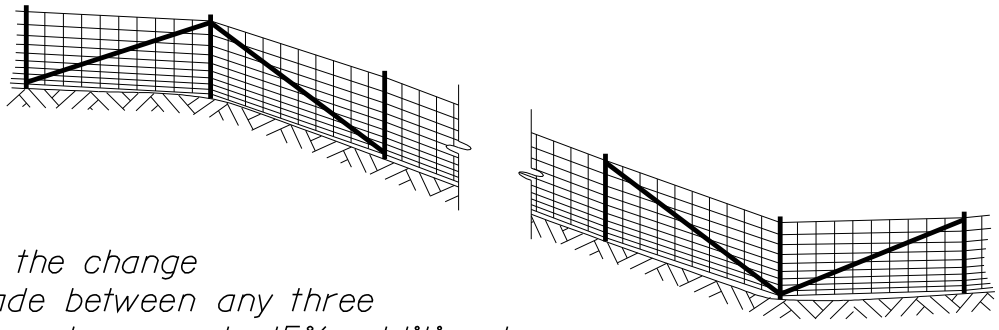

Where the change in grade between any three fence posts exceeds 15%, additional intermediate bracing shall be provided.

DRIVE GATEWAYS (16 FEET) & INTERMEDIATE BRACING

607(05)

In Medians and in Clear Zones the Top of Rail shall be omitted and replaced with 7 Guage Galvanized Steel Wire.

18'-0" min. length

Top Rail

6" minimum Expansion Sleeves

Top Rail

24" max.

No. 9 or (2) No. 14 Steel Fasteners or Approved Equal

Barbands 3/4" x 1/8" if required

Chain Link Fabric 2" Mesh No. 9 Barbed Finish

Brace Rail

Stretcher Bar 3/4" x 3/16" if required

No. 9 or (2) No. 14 Steel Fasteners for Tubular Posts or Approved Equal

15" max.

15" max.

Adjustable Tie Rod (3"± mm Take-Up) 3/8" Round

Ground Line

10'-0" C/C max.

10'-0" C/C max.

~ END OR CORNER POST ~

~ LINE POST ~

~ LINE POST ~

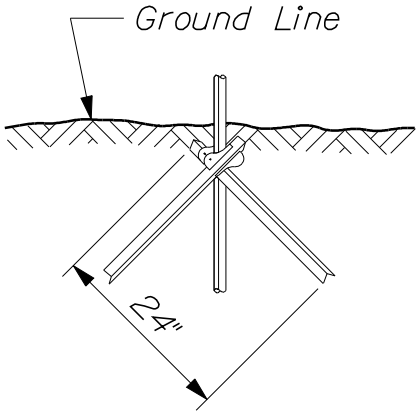

~ DRIVE ANCHOR ~
(90° to Fence Line)

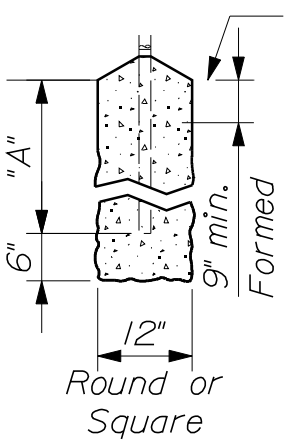

"A" = 2'-6" for 4' Fence. 3'-0" for 6' and 8' Fences. 5'-0" for all end and Gate Posts.

~ LINE, CORNER, AND END POST BASE ~

CHAIN LINK FENCE

607(06)

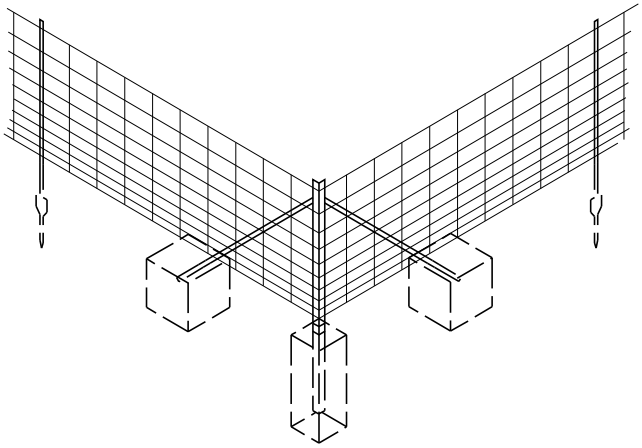

~ BRACING ASSEMBLY
FOR METAL POSTS ~

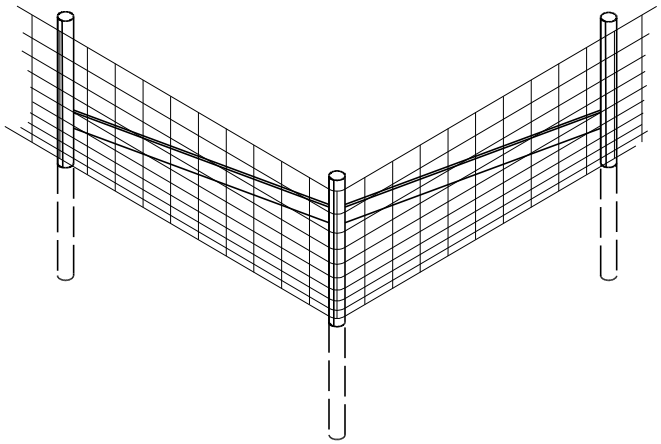

~ BRACING ASSEMBLY
FOR WOOD POSTS ~

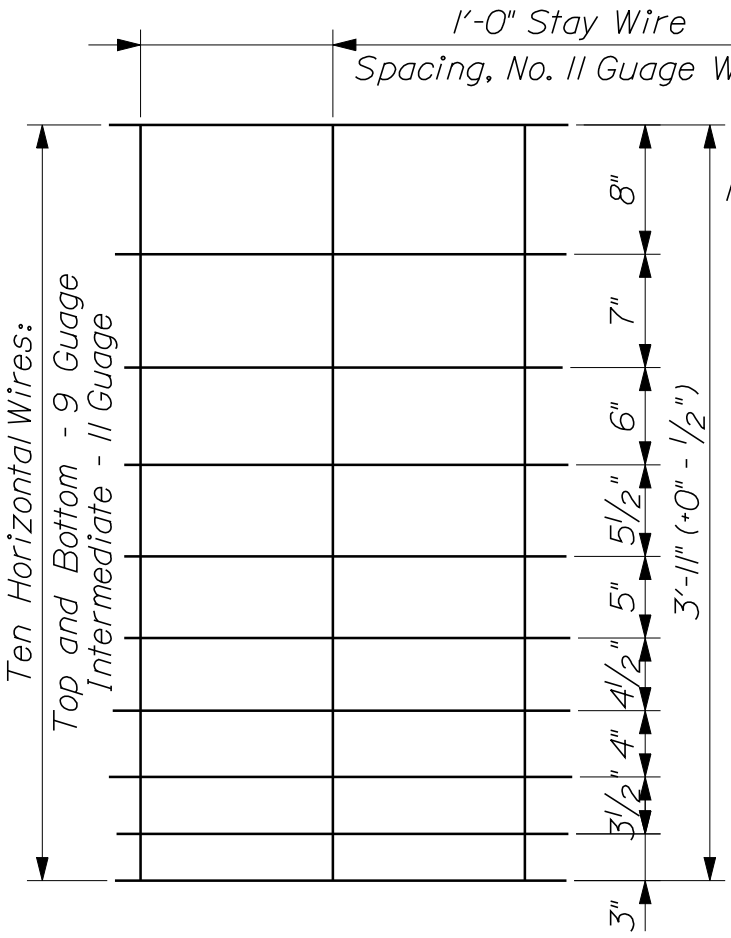

~ WOVEN WIRE FENCE ~

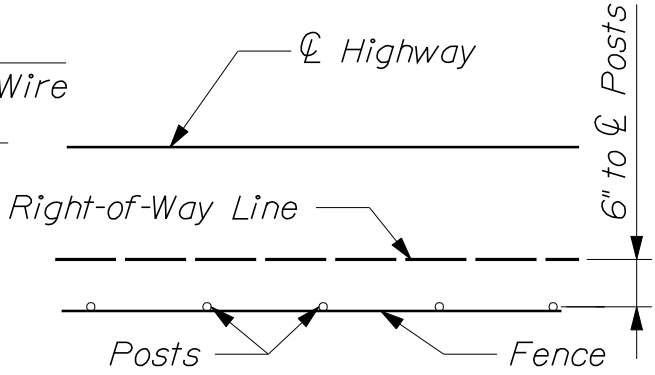

NON-CONTROLLED
ACCESS FENCE

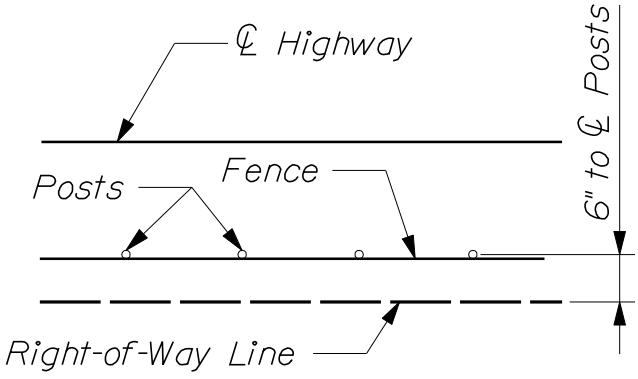

CONTROLLED ACCESS FENCE

~ FENCE LOCATION
WITH RESPECT TO
RIGHT OF WAY LINE~

FENCING

607(07)

GENERAL NOTES

1. When ledge is encountered, steel posts shall be set and grouted 12 inches deep unless the posts penetrate the ground to the depth indicated on the drawings.

2. When wood posts are used, braces shall be attached to the posts with a minimum of (4) 40 penny nails per attachment.

3. When the word "Standard" is used, it shall be interpreted as if it were followed by the expression "To The Fence Industry".

4. Woven wire and barbed wire fencing shall be attached to wood posts with 9 guage 1½" galvanized staples.

5. Concrete for post foundations shall be Class B.

6. In well formed holes with vertical walls, forms will be required only at the top 9 inches. Holes which cannot be well formed shall have forms for the full depth of the base.

~ SPACING OF FENCE POSTS ON CURVES ~

RADIUS OF CURVE AT FENCE LOCATION	NORMAL POST SPACING
Over 500 feet	10 feet
Over 200 feet to 500 feet	8 feet
Over 100 feet to 200 feet	6 feet
100 feet and Less	5 feet

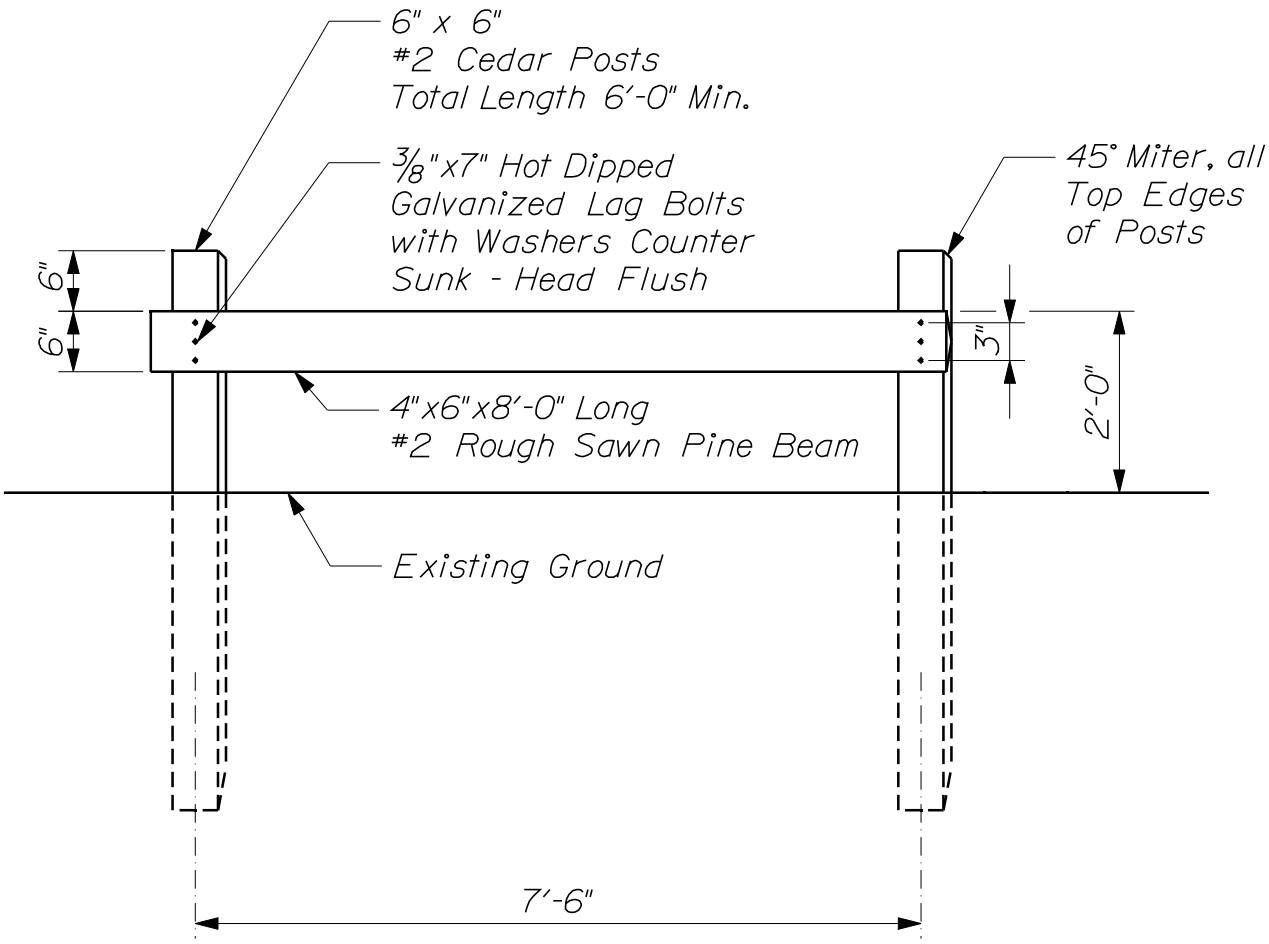

NOTES:

1. Pre-drill 1/4" diameter holes for Lag Bolts.

2. Pre-drill 1 1/4" diameter holes 1/2" deep to counter sink Lag Bolts.

TIMBER FENCE

607(09)

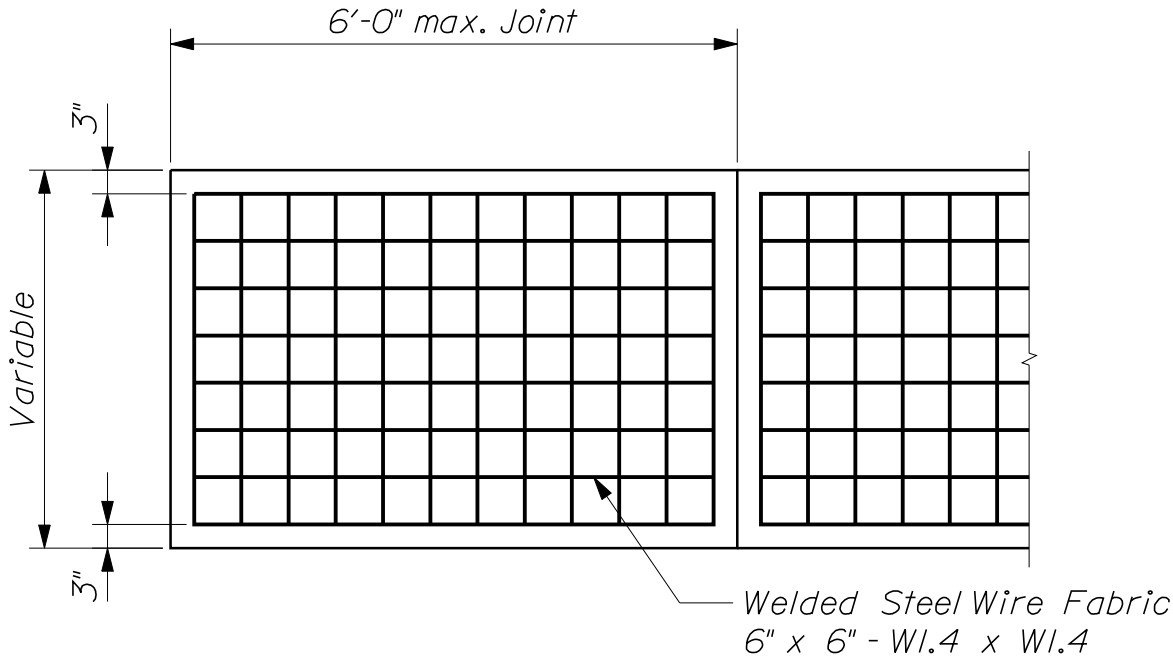

~ PLAN ~

NOTE:
Sidewalk shall conform to Standard Specifications Section 608.

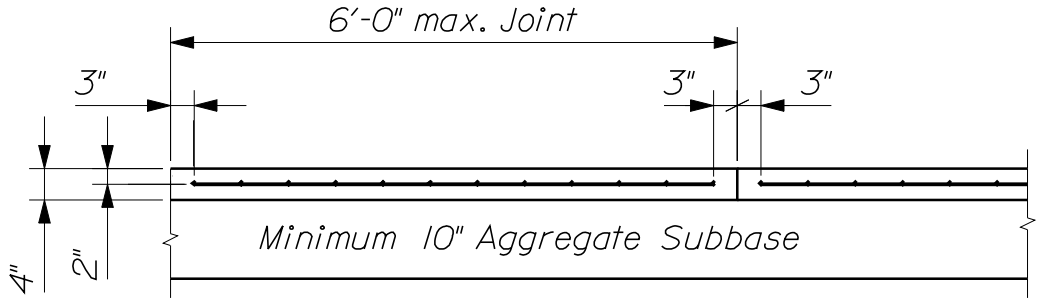

~ ELEVATION ~

REINFORCED PORTLAND CEMENT CONCRETE SIDEWALK

608(01)

DETECTABLE WARNINGS

608(02)

VIEWS AND DETAILS OF THE DETECTABLE WARNING

(NOT TO SCALE)

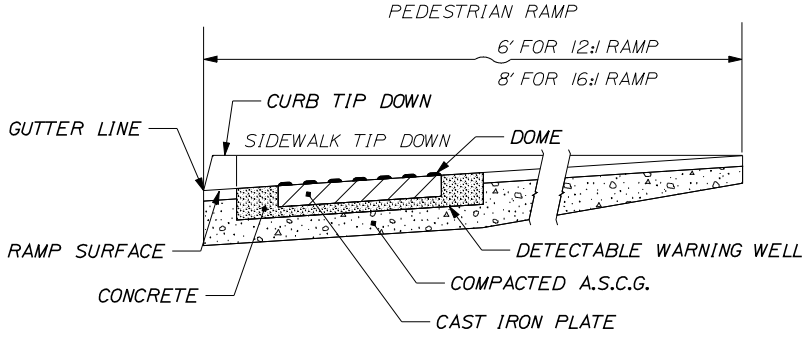

SIDE SECTION VIEW OF
DETECTABLE WARNING, WELL, CURB AND GUTTER

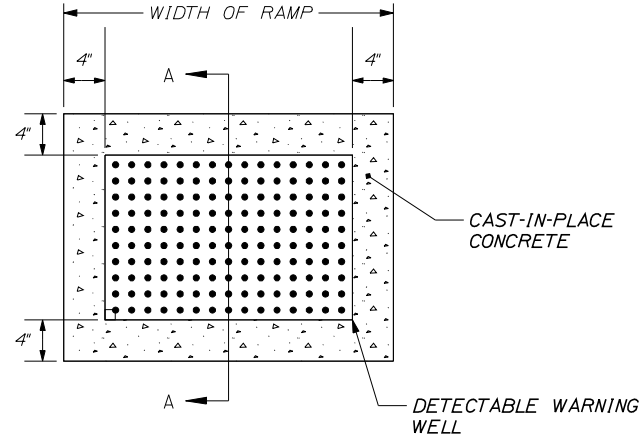

PLAN VIEW OF
DETECTABLE WARNING AND WELL

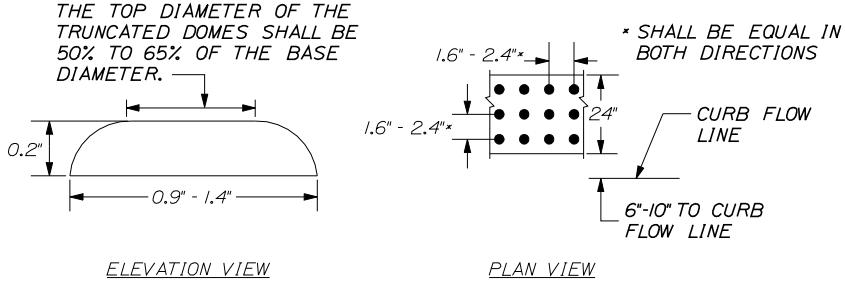

DOME AND DETECTABLE WARNING DETAILS

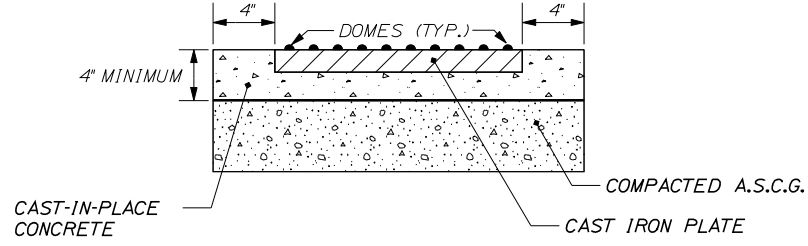

SECTION A-A

NOTE: ALL DETECTABLE WARNING AREAS SHALL START 6-10" FROM THE FLOW LINE OF THE CURB, BE 24" IN DEPTH, AND COVER THE COMPLETE WIDTH OF THE RAMP AREA ONLY.

CURB TYPES 1, 2 & 5 ON CURVES				
TYPE	RADIUS OF CURVE	LENGTH	PAID FOR AS	STONE IS CUT OR CAST
1 & 2	0 to 60′ incl.	4′ min.	Circular	Arc to Fit Curve
	Over 60′ to 160′	4′ to 6′	Straight	Straight Pieces
5	0 to 8′ incl.	2′ min.	Circular	To Fit Curve
	Over 8′ to 30′ incl.	12" min. Chord	Circular	Str. Pieces, Radial Ends
	Over 30′ & Under 160′	2′ to 3′	Straight	Straight Pieces
	160′ and Over	3′ to 6′	Straight	Straight Pieces

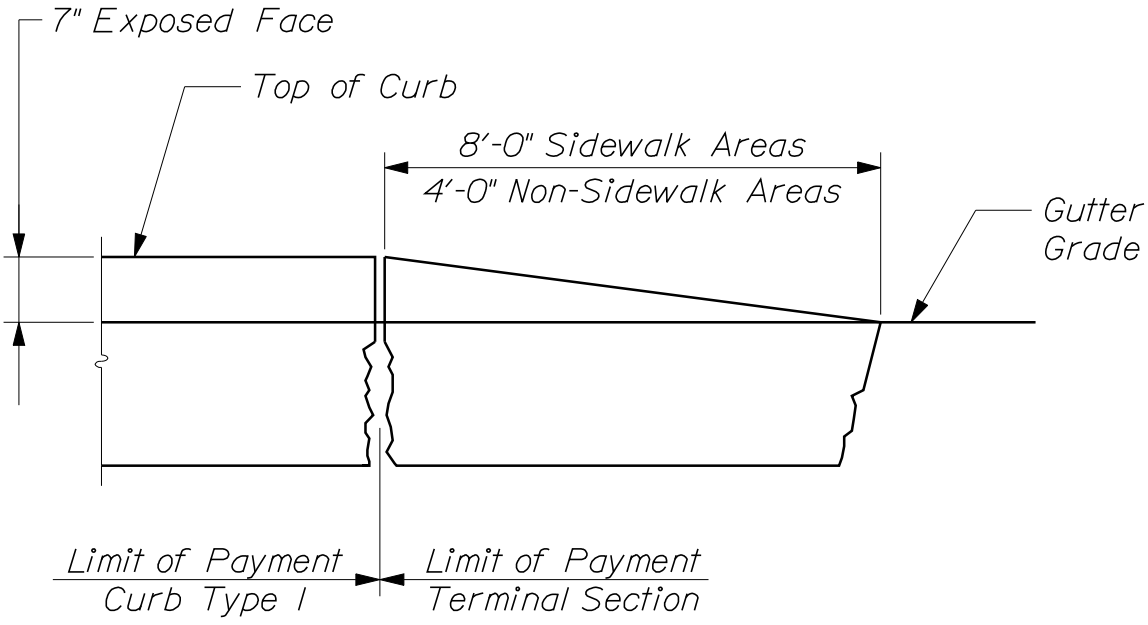

~ TERMINAL SECTION TYPE "1" ~

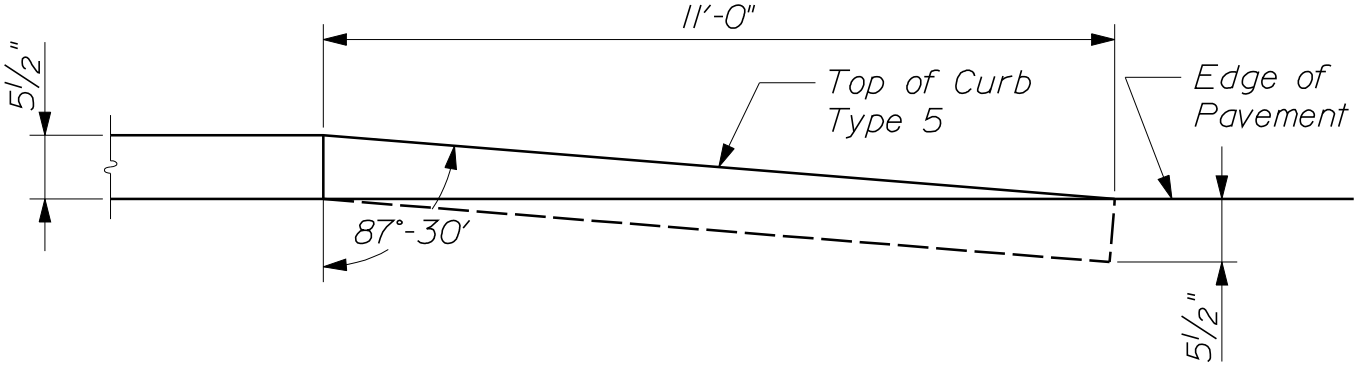

~ TERMINAL SECTION TYPE "5" ~

(use when shown on plans only)

TERMINAL CURB SECTION

609(01)

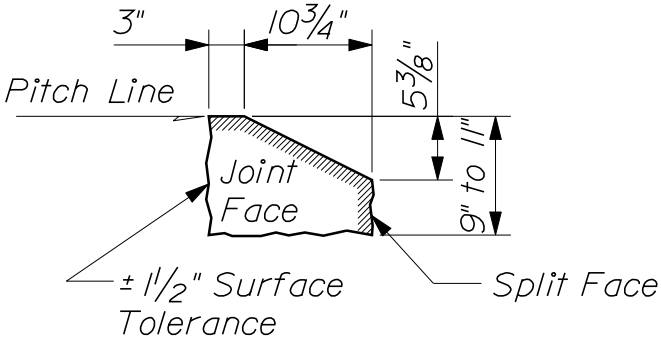

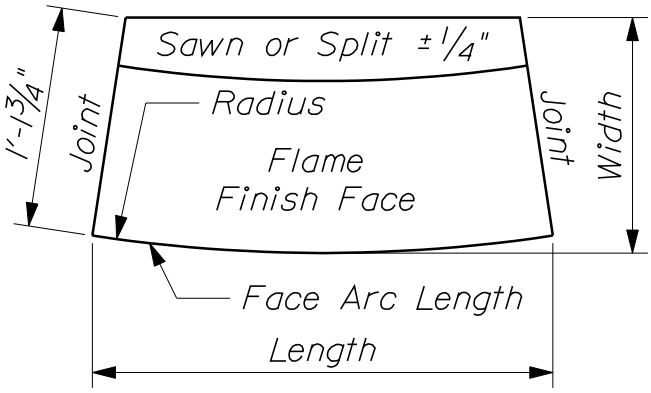

Approved Alternate Circular Curb Type 5
2'-0" to 8'-0" Radius

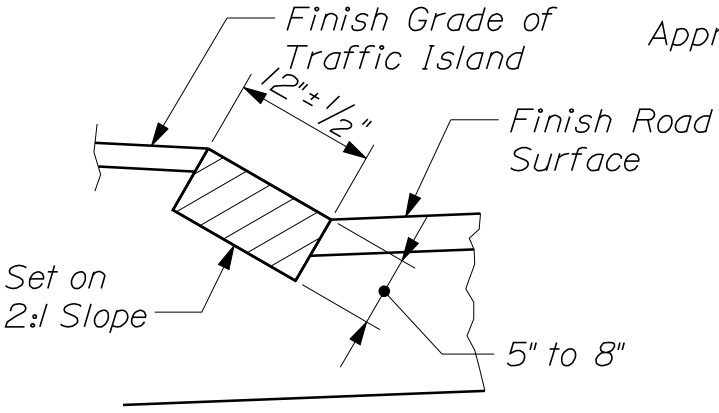

3' min. Length

~ CURB TYPE 5 ~

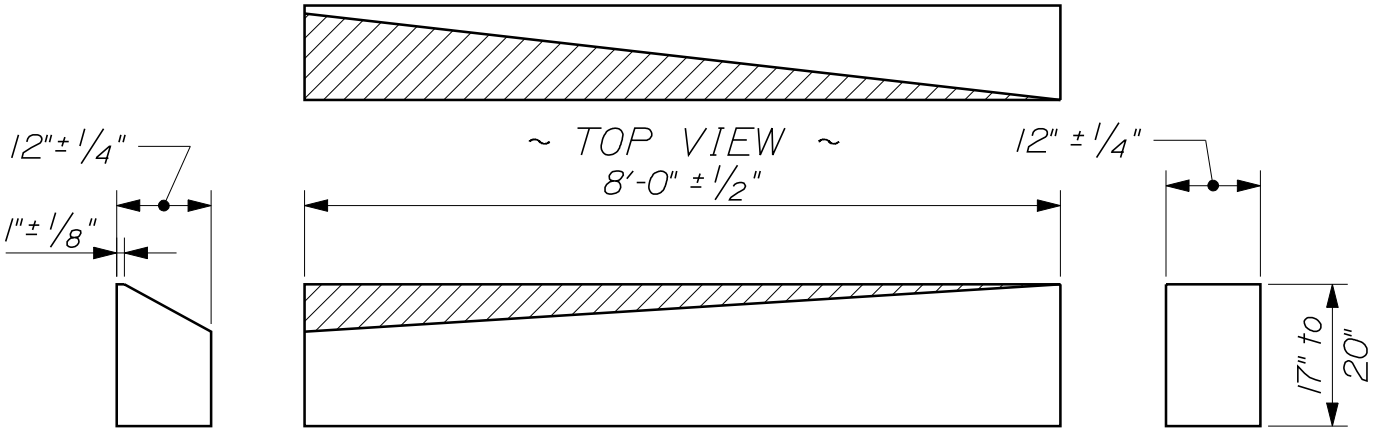

Transition Section "B"
Curb Type "5" to Vertical Curb Type "1" & Type "2"

~ CURB TRANSITION ~

CURB
609(02)

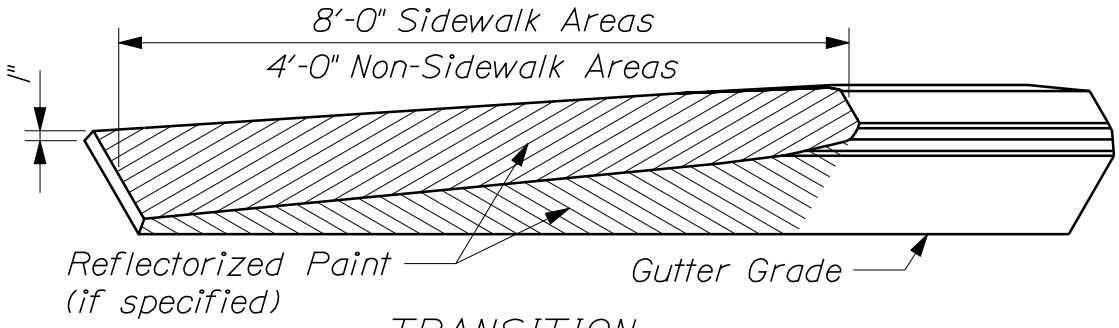

~ TRANSITION ~

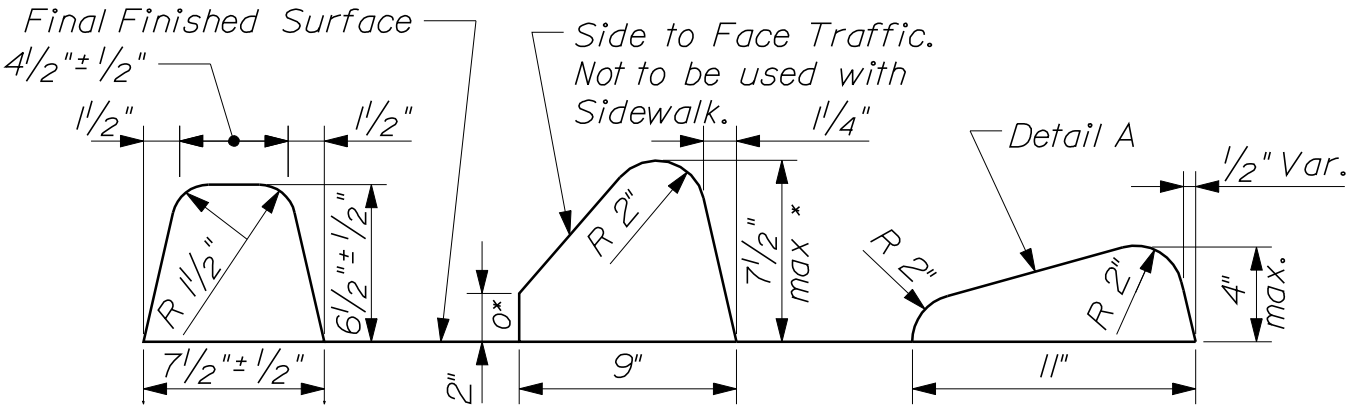

~ MOLD 1 ~ ~ MOLD 2 ~ ~ MOLD 3 ~

*Under Guardrail *Under Guardrail

~ CURB TYPE 3 ~

Curb Mold 2 or 3 shall be used in all situations except for where the curb forms the edge of the sidewalk. Mold 1 shall be used in conjunction with sidewalks or where there is a potential for sidewalks. Mold 3 shall be used in situations where the design speed exceeds 45 mph. Maximum height of Curb under Guardrail shall not exceed 4".

~ DETAIL A ~

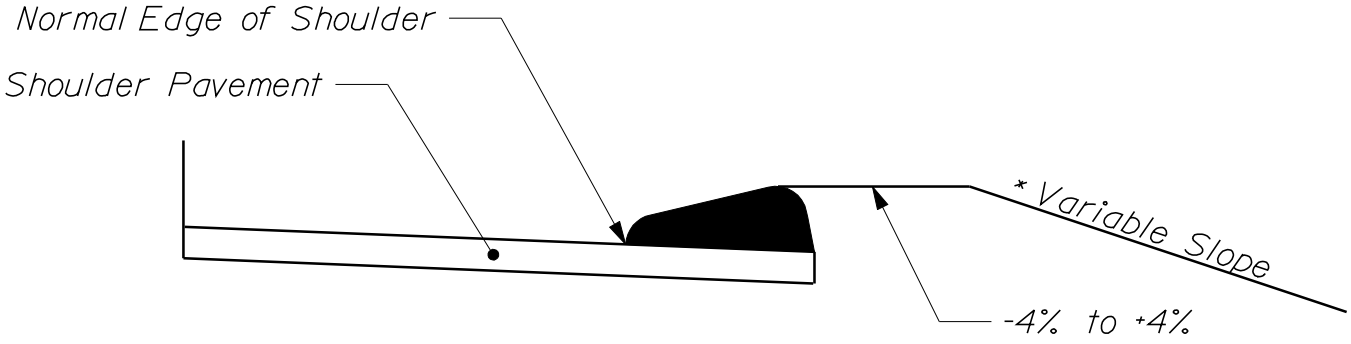

* See Typical Sections for Project

CURB TYPE 3

609(03)

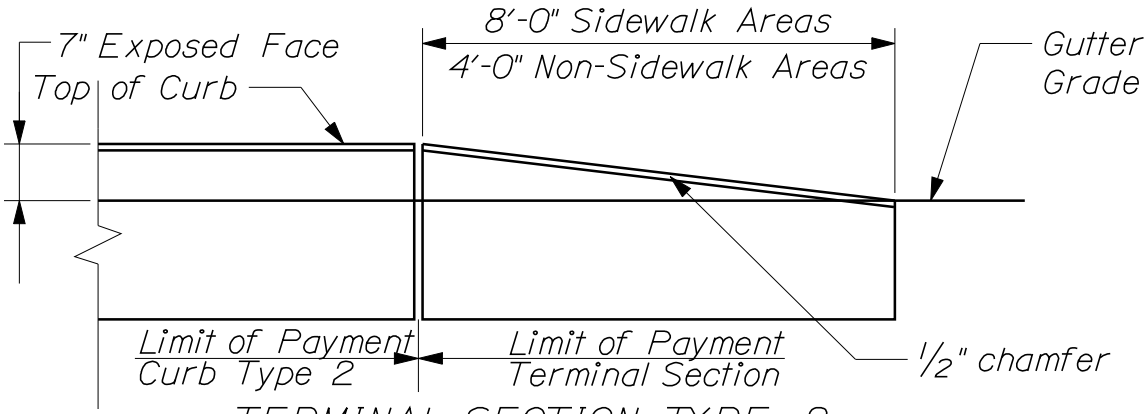

~ TERMINAL SECTION TYPE 2 ~

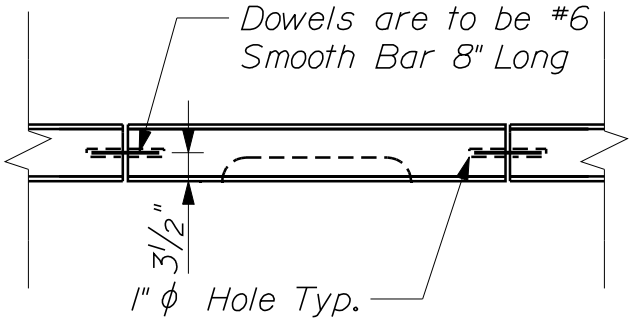

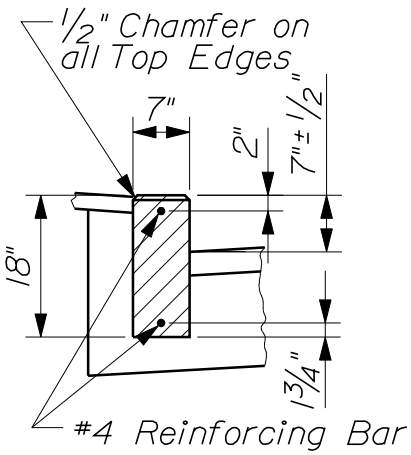

~ VERTICAL CURB ~
TYPE 2

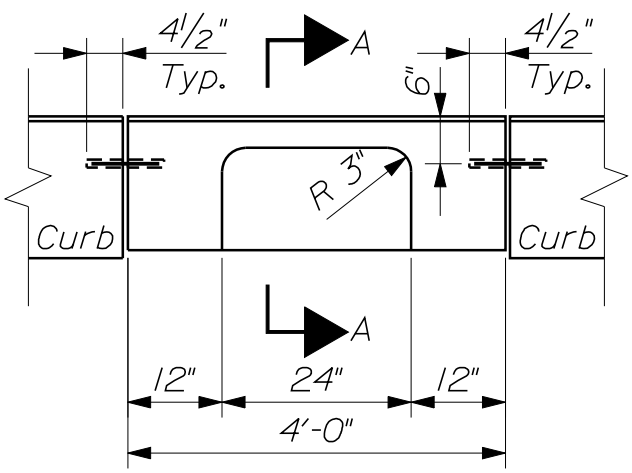

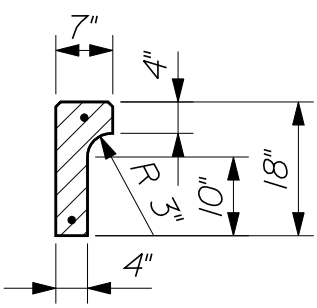

~ CURB INLET TYPE 2 ~ ~ SECTION A - A ~

VERTICAL CURB TYPE 2

609(04)

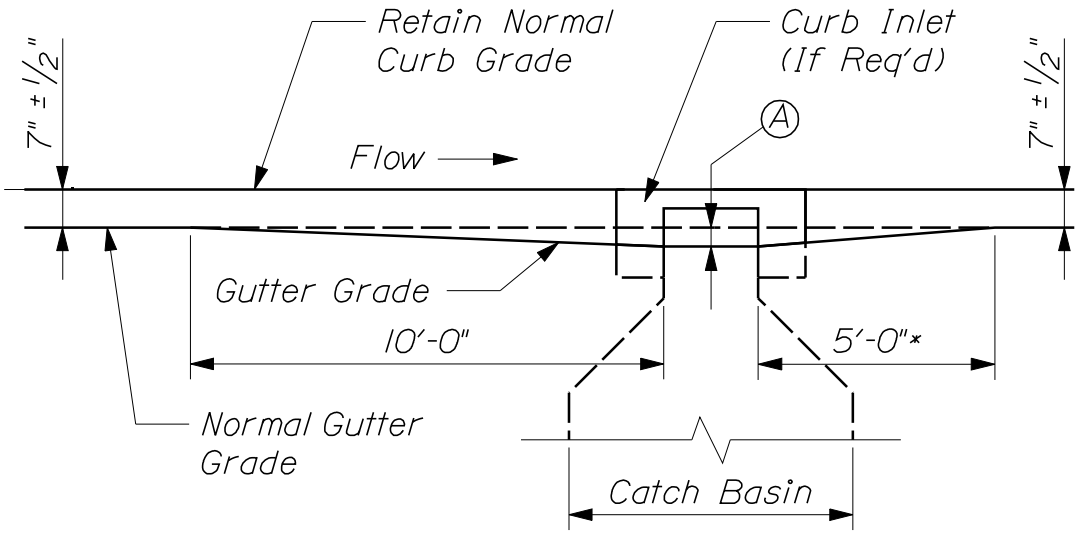

~ AT CURB INLETS ~

(A) For Parking Lane = 2"
Adjacent to Travel Lane = 0"

* Dimension to be 10'-0"
if at bottom of a sag.

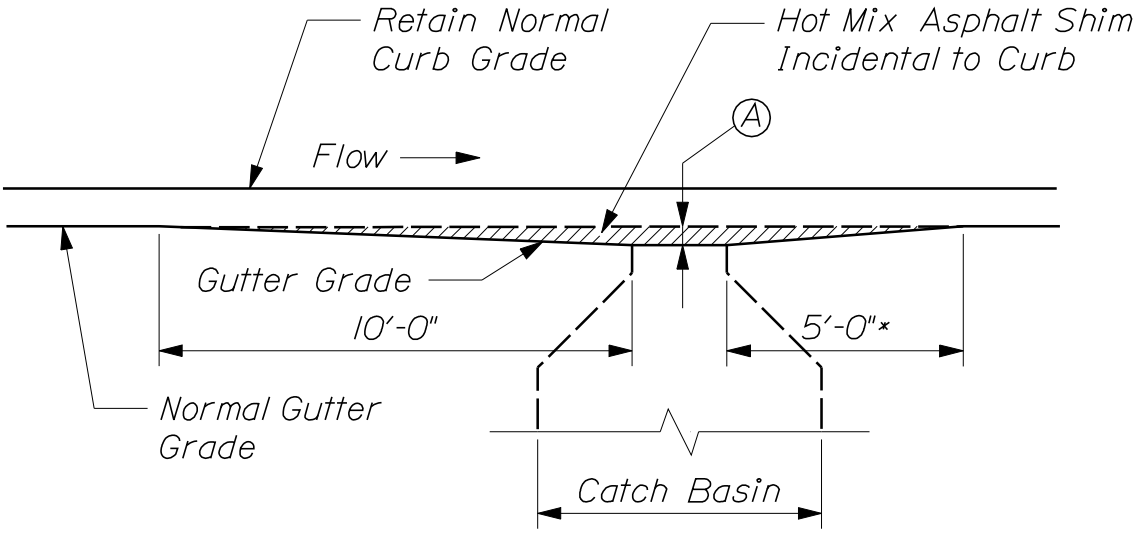

~ AT CURB WITHOUT INLET STONES ~

NOTE:

Grates shall be installed on gradient of the gutter and be depressed 2" below the normal gutter grade unless this depression interferes with traffic.

GUTTER GRADE TRANSITION AT CATCH BASIN

609(05)

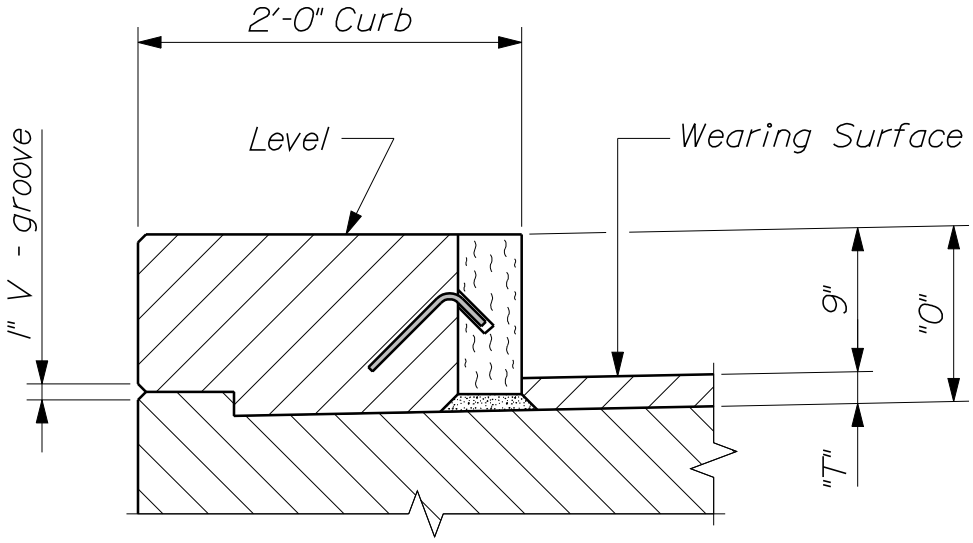

~ CONCRETE CURB WITH VERTICAL BRIDGE CURB ~

For Wearing Surface ("T") details, refer to Section 502 ~ Concrete Curb

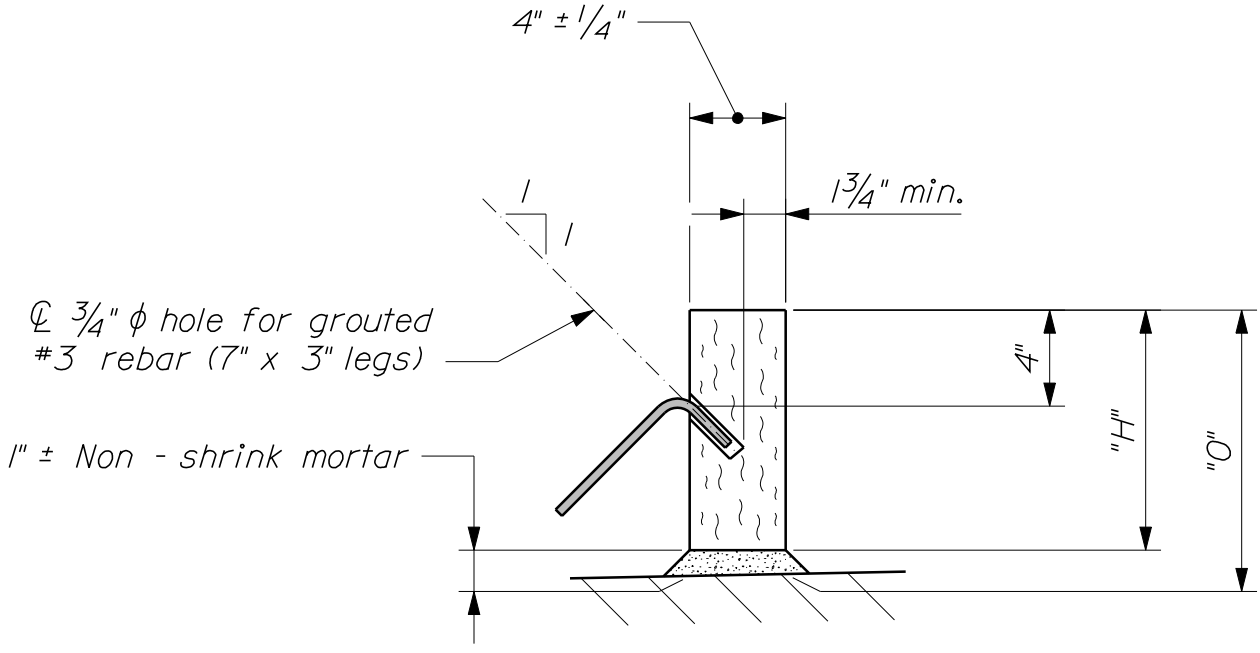

~ VERTICAL BRIDGE CURB DETAIL ~

TABLE OF DIMENSIONS				
Type	Wearing Surface Type	"T"	"H"	"O"
1A	Unreinforced Concrete	2"	10" ± 1/4"	11"
1B	Bituminous	3 1/4"	11 1/4" ± 1/4"	1'-0 1/4"

VERTICAL BRIDGE CURB

609(06)

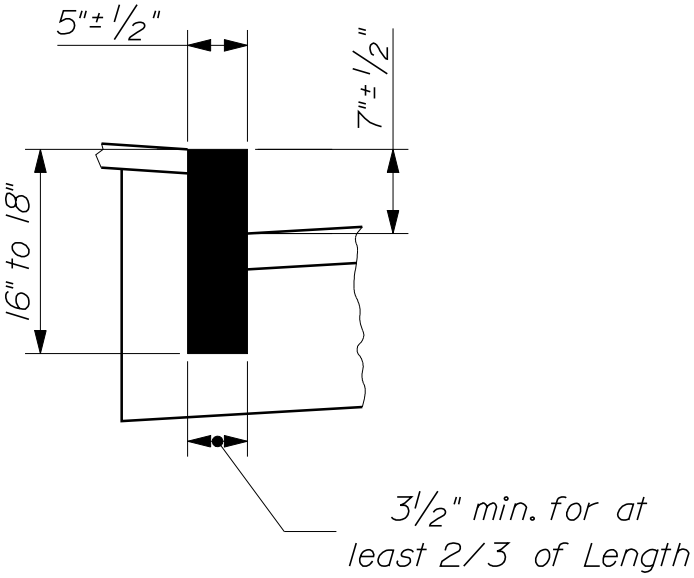

~ VERTICAL CURB ~
TYPE 1

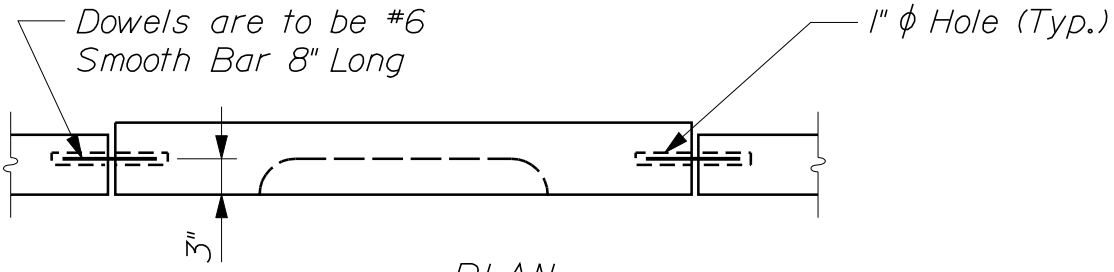

~ PLAN ~

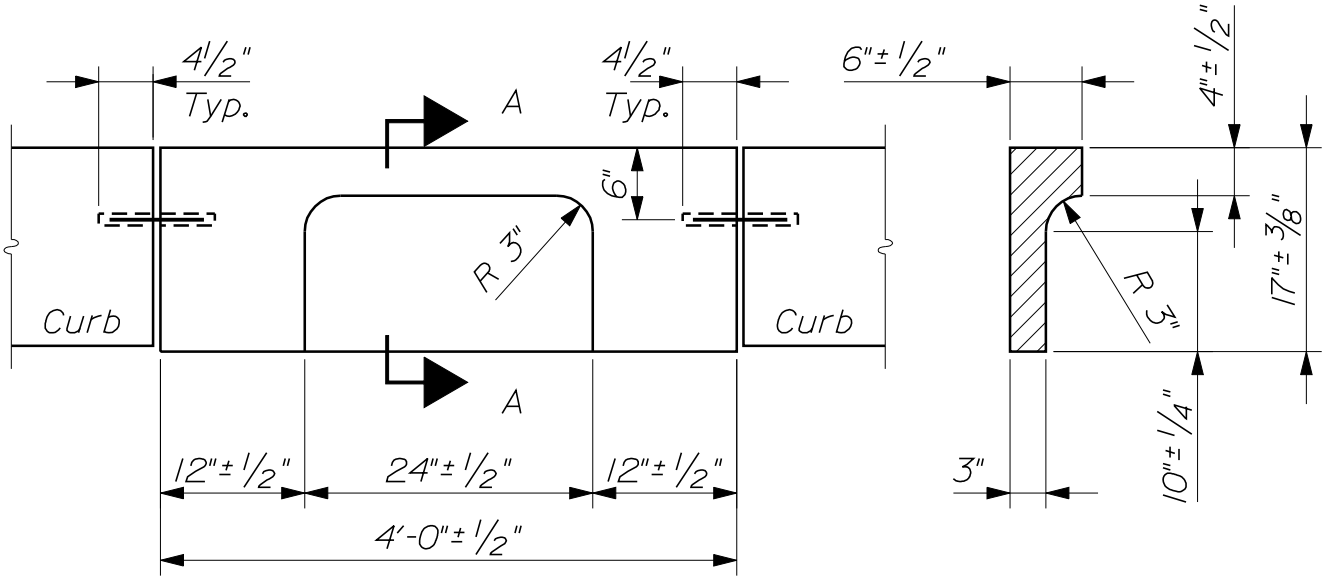

~ CURB INLET TYPE 1 ~

~ SECTION A-A ~

CURB TYPE 1

609(07)

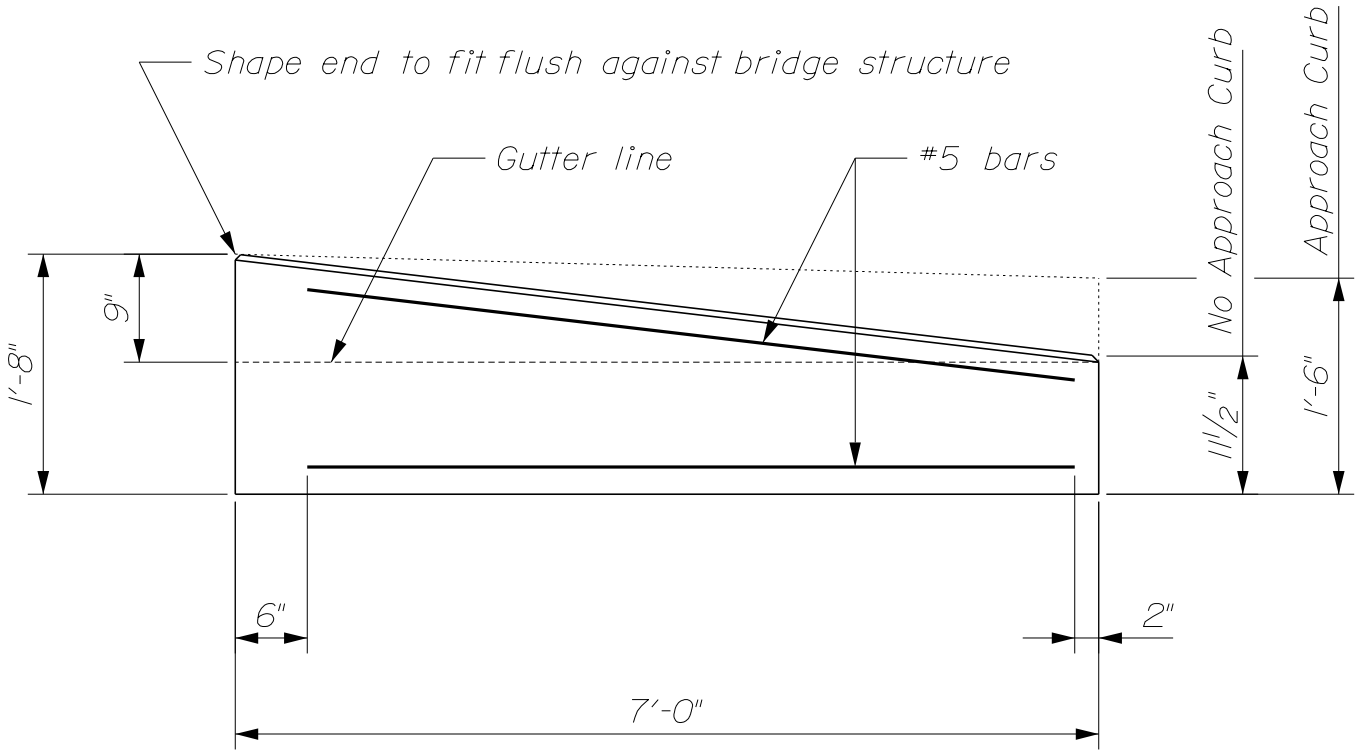

~ ELEVATION ~

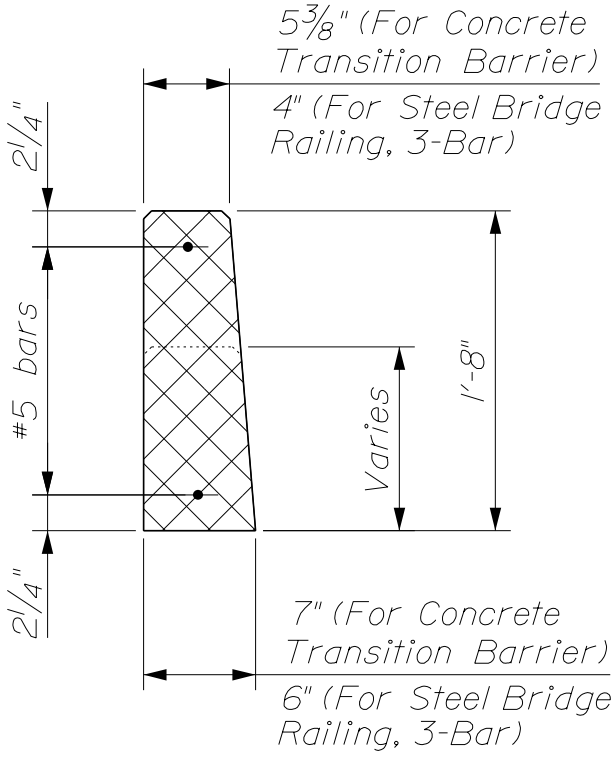

~ SECTION ~

NOTES:

1. Precast Concrete Transition Curb shall meet the requirements of Standard Specifications Section 609 - Curb.

2. Dimensions shown are designed to accommodate a 9" reveal bridge curb with a battered face. Dimensions shall be adjusted to fit other situations as required.

3. Alternate transition curb sections may be used as approved by the Resident.

4. Unless otherwise indicated, payment will be included under the applicable Bridge Transition item. No separate payment will be made.

PRECAST CONCRETE TRANSITION CURB

609(08)

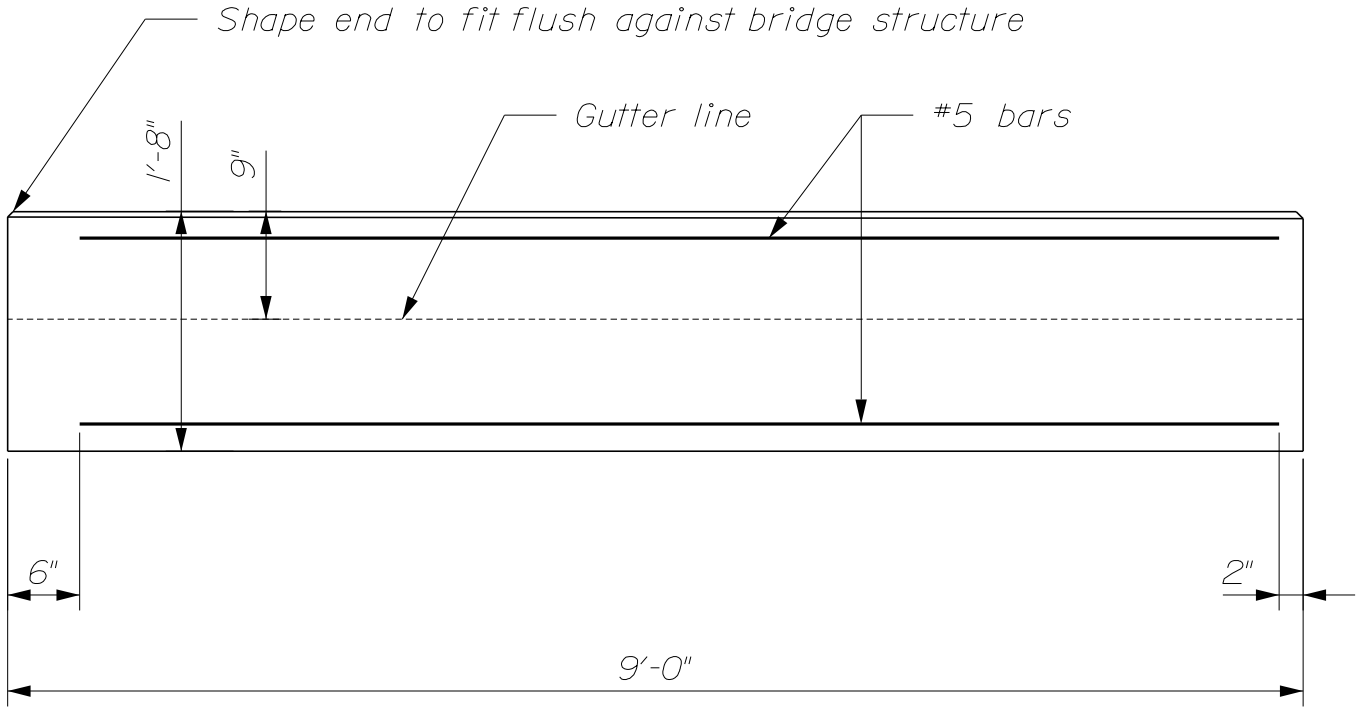

~ ELEVATION ~

NOTES:

1. Precast Concrete Transition Curb shall meet the requirements of Standard Specifications Section 609 - Curb.

2. Dimensions shown are designed to accommodate a 9" reveal bridge curb with a battered face. Dimensions shall be adjusted to fit other situations as required.

3. Alternate transition curb sections may be used as approved by the Resident.

4. Unless otherwise indicated, payment will be included under the applicable Bridge Transition item. No separate payment will be made.

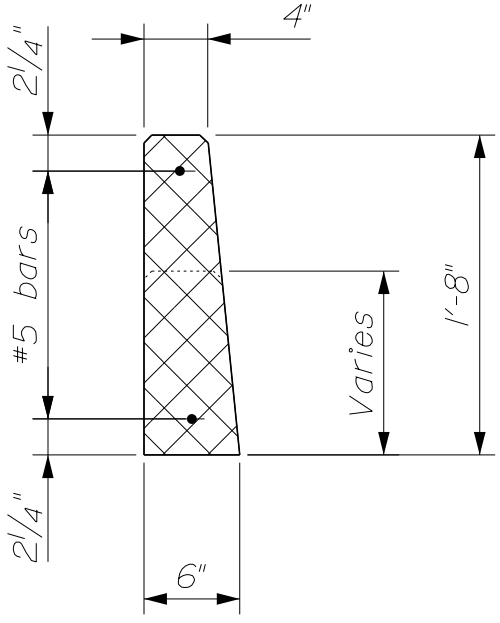

~ SECTION ~

PRECAST CONCRETE VERTICAL CURB

609(09)

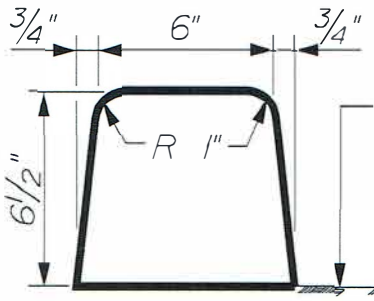

MOLD 1 - VERTICAL

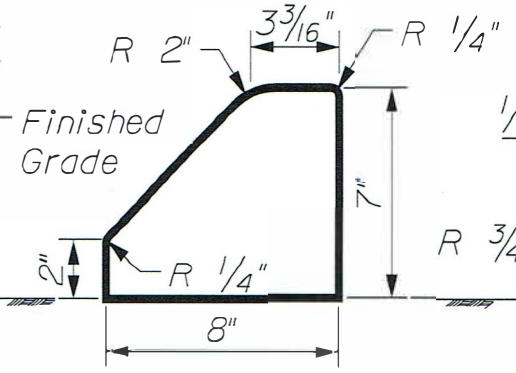

MOLD 2

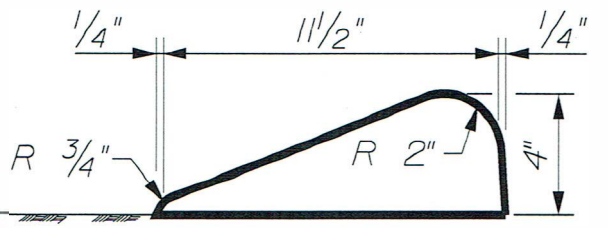

MOLD 3 - SAFETY CURB

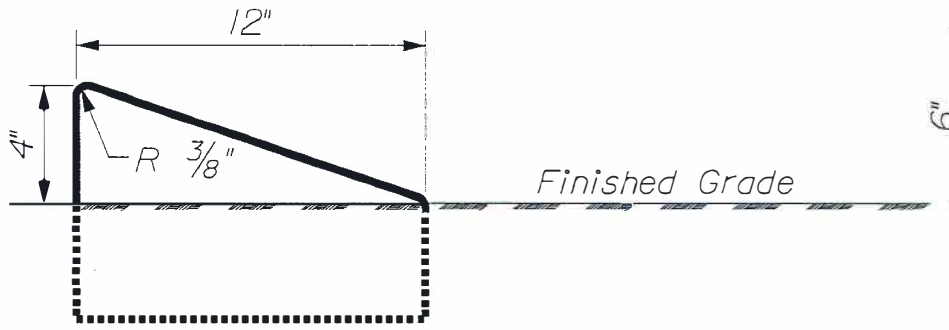

MOLD 4

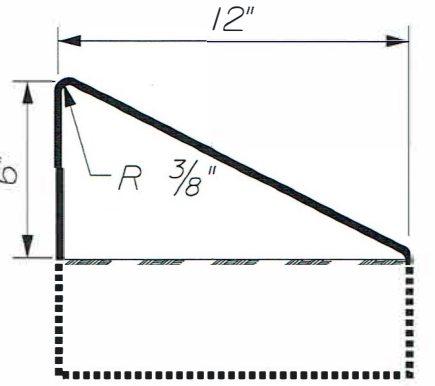

MOLD 5

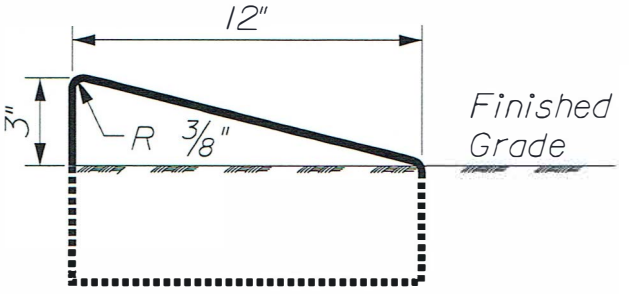

MOLD 6

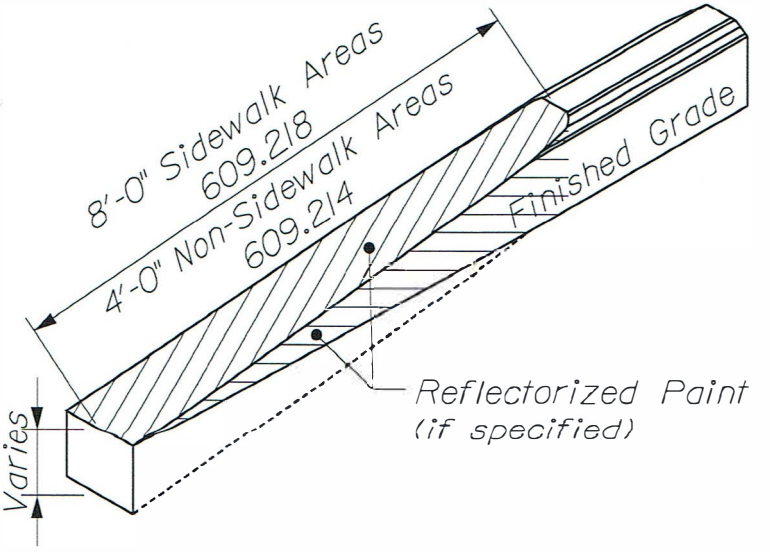

CONCRETE SLIPFORM CURB

609(10)

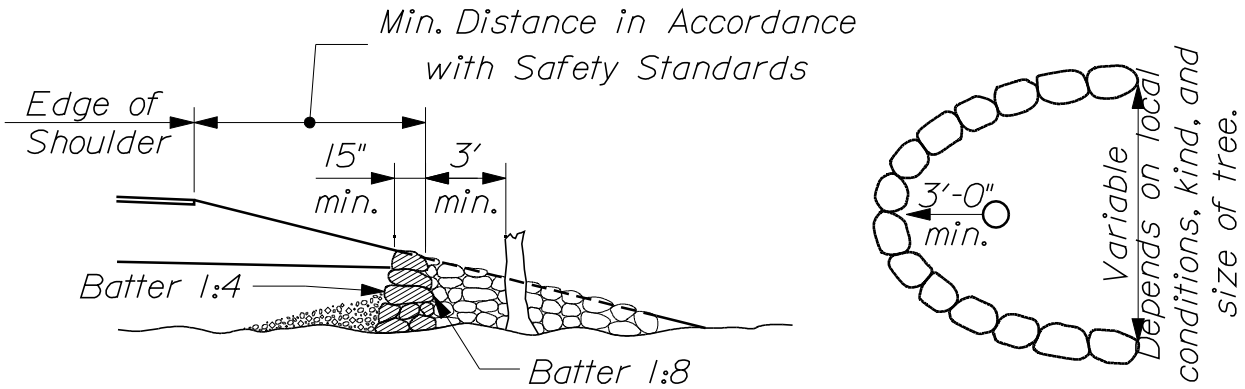

~ OPEN WELL ~

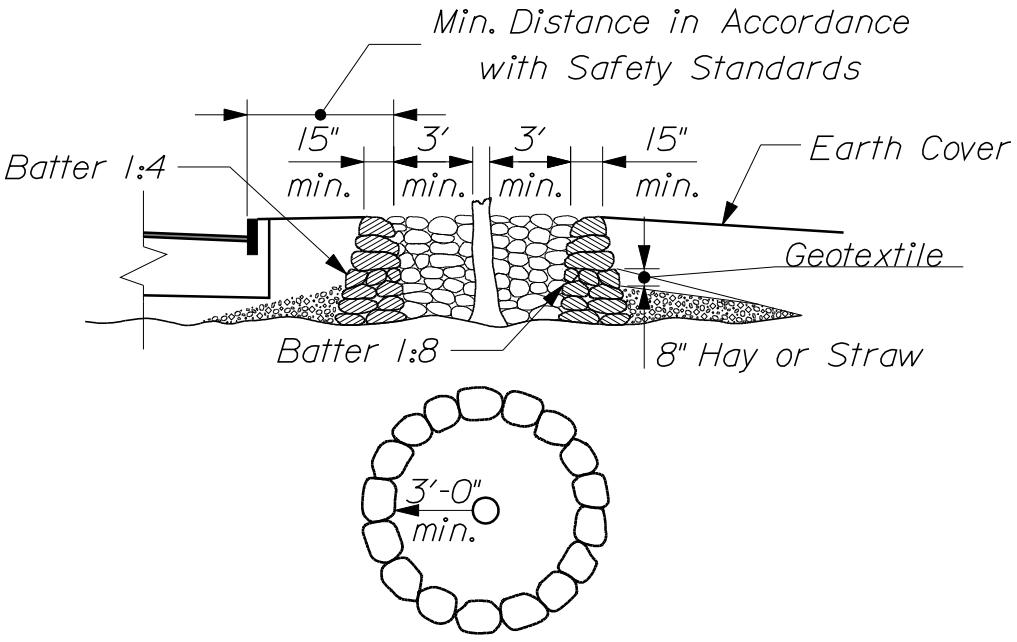

~ CLOSED WELL ~

NOTES:

1. Selected ledge excavation, crushed stone or other porous material shall be used to fill around the old ground area of the tree from the tree well to the perimeter of the branches.

2. A Geotextile to prevent infiltration of fines shall be placed over the rock fill.

3. If drainage away from the tree well is necessary, Underdrain Outlet Pipe shall be used, and will be paid for under Item 605.10 6" Underdrain Outlet.

4. The Tree Wells shall be paid for under Item 610.09 Hand Laid Riprap.

TREE WELLS

610(01)

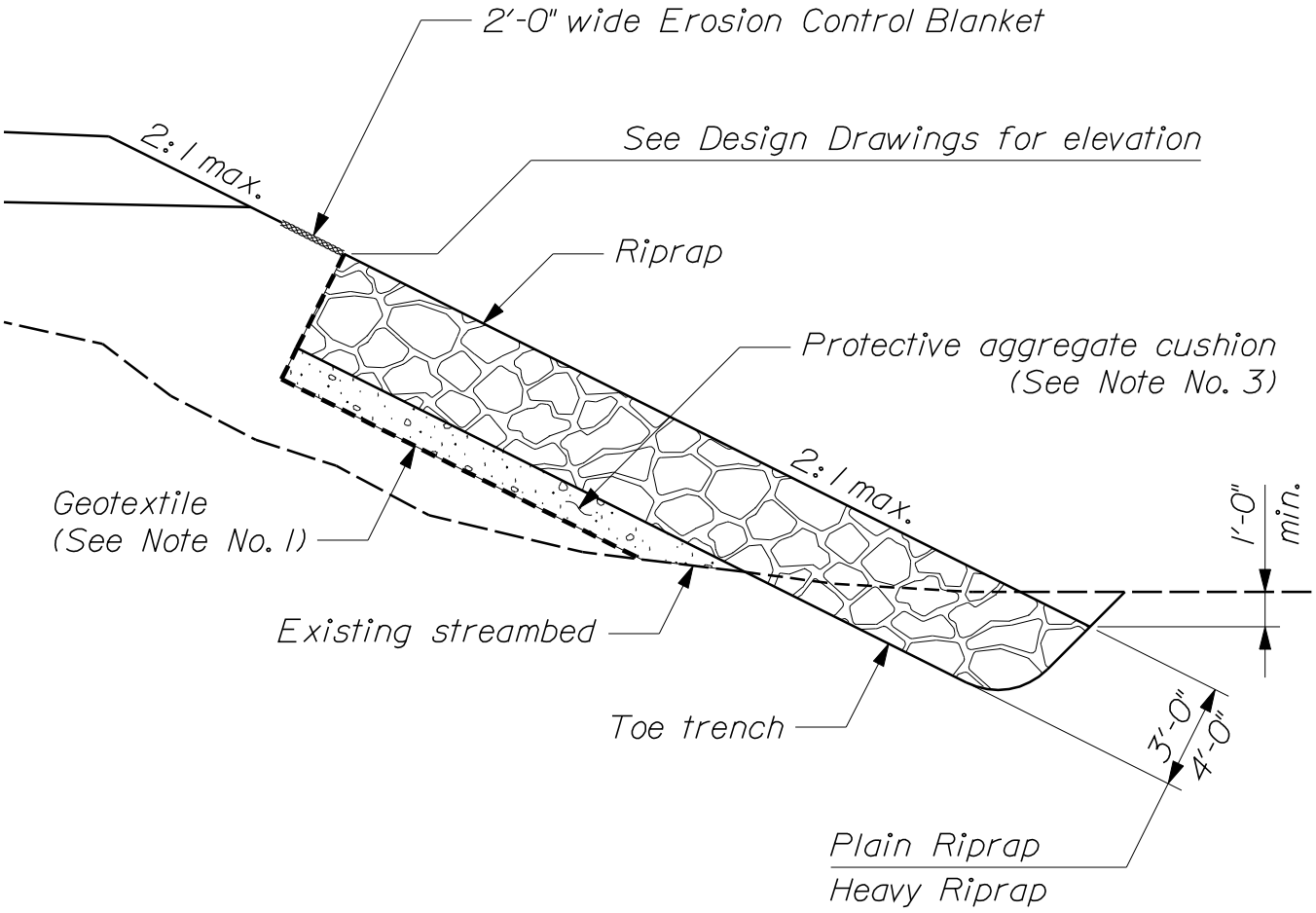

~ PLAIN OR HEAVY RIPRAP SIDE SLOPE ~

NOTES:

1. Geotextile shall be Class 1, Non - woven, Erosion Control Geotextile (loosely placed) meeting the requirements of Standard Specification 722.03.

2. Refer to Standard Detail 620(05) for specific details on geotextile placement.

3. Protective aggregate cushion shall be a minimum of 12 inches thick and shall meet the requirements of 703.19, Granular Borrow - Material for Underwater Backfill

4. Use of Plain or Heavy Riprap shall be as shown on the Design Drawings.

STONE SCOUR PROTECTION

610(02)

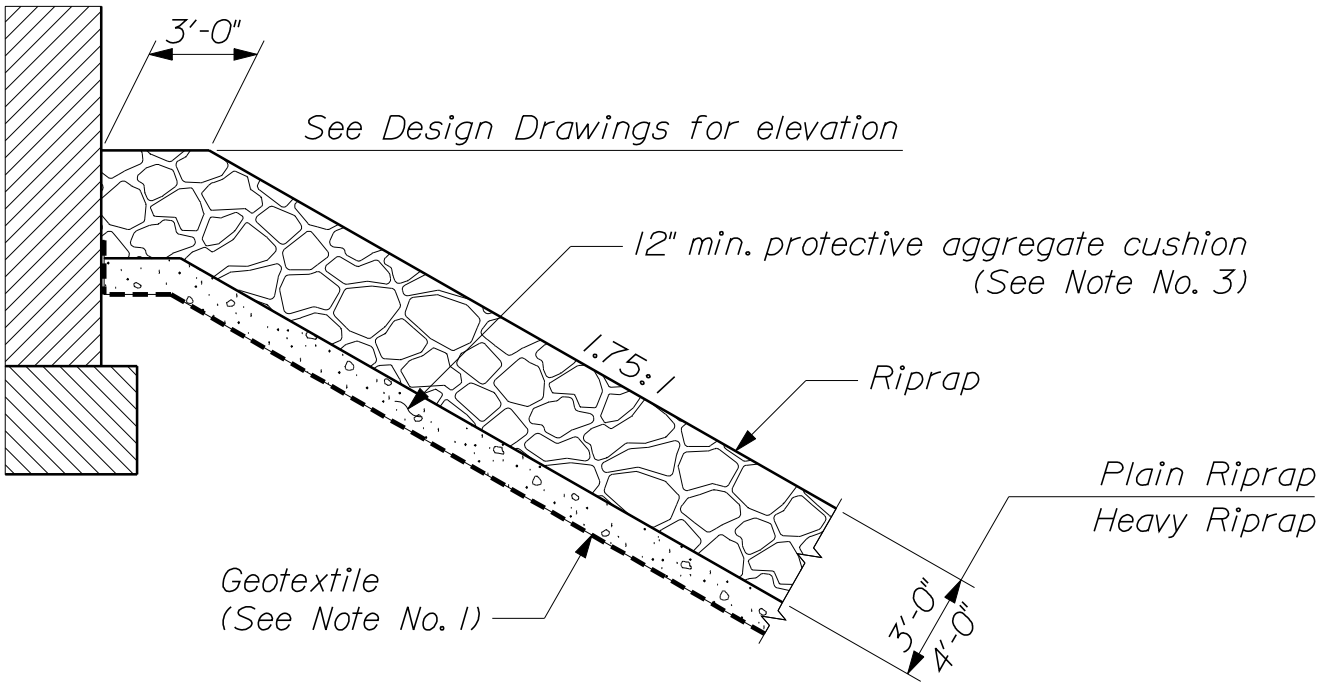

~ RIPRAP SLOPE AT TRADITIONAL ABUTMENT ~

Note: Work these details with Standard Detail 610(02)

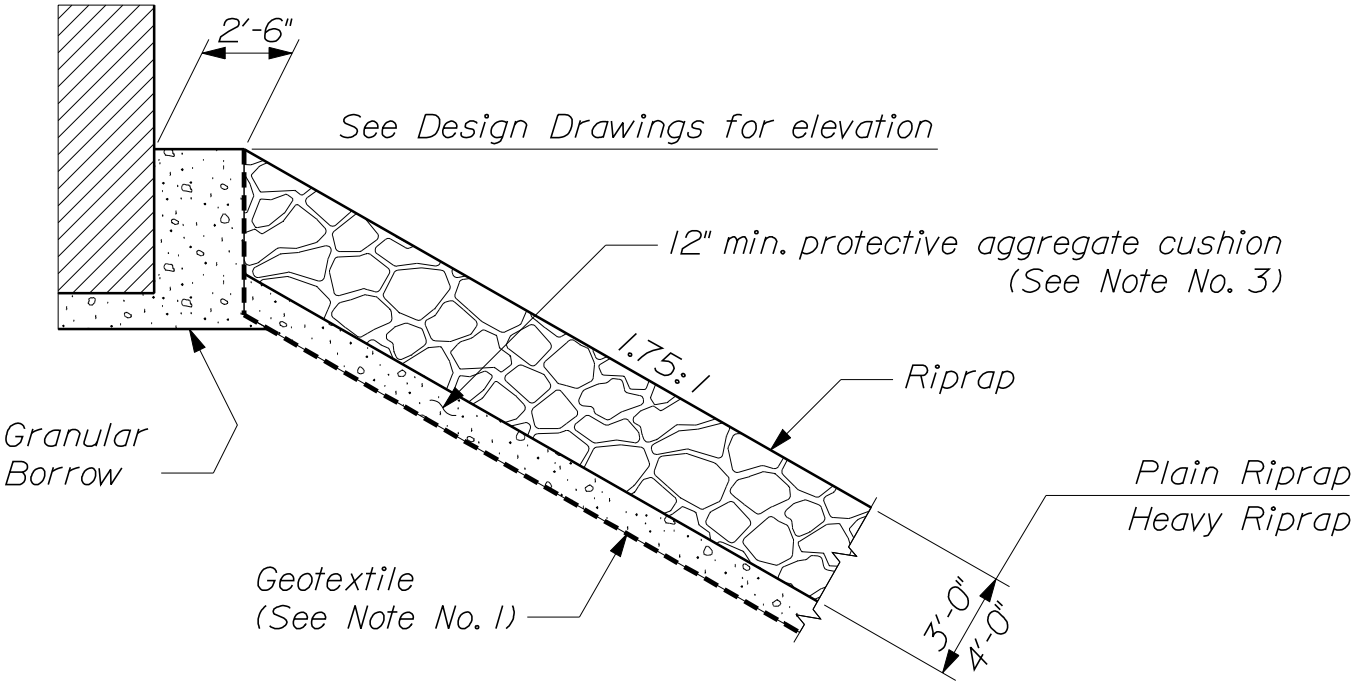

~ RIPRAP SLOPE AT INTEGRAL ABUTMENT ~

STONE SCOUR PROTECTION

610(03)

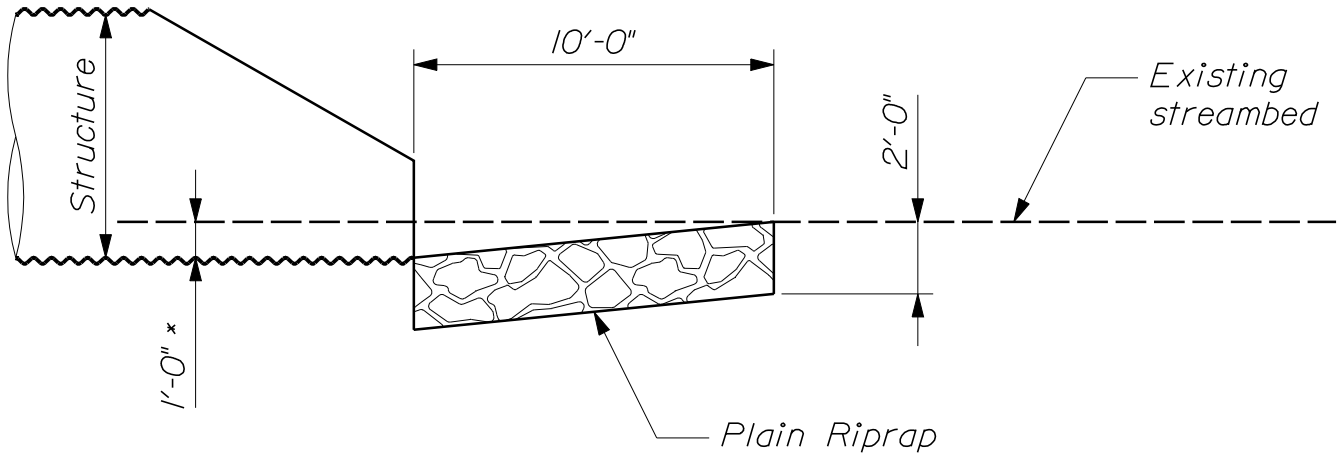

~ PLAIN RIPRAP APRON ~

* Or as specified on the Design Drawings

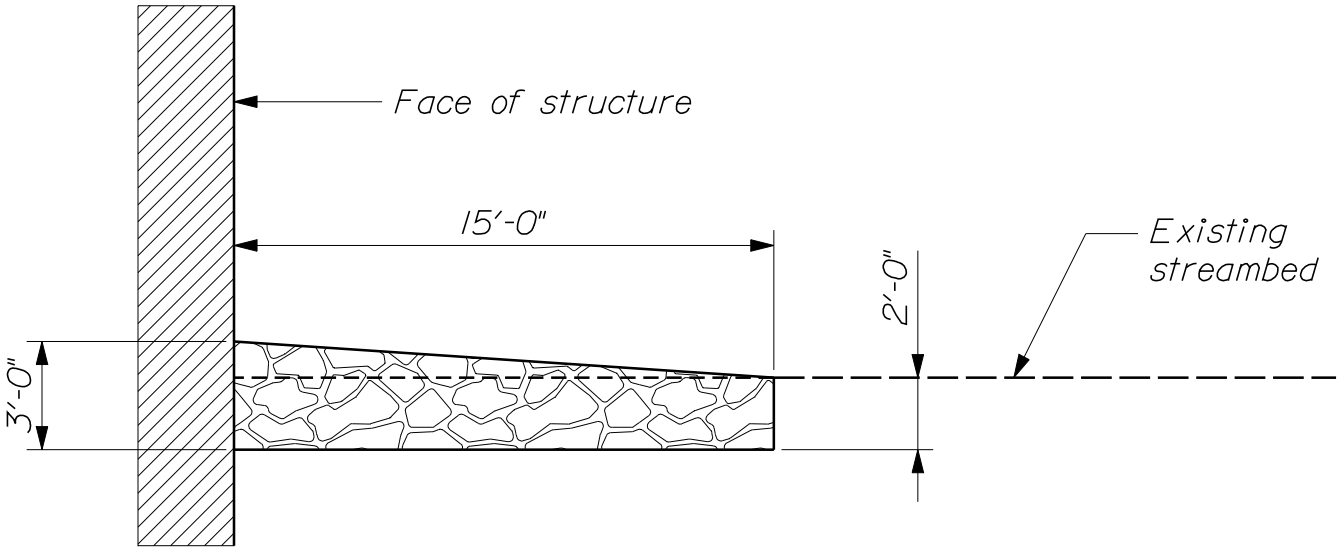

~ STONE BLANKET ~

STONE SCOUR PROTECTION

610(04)

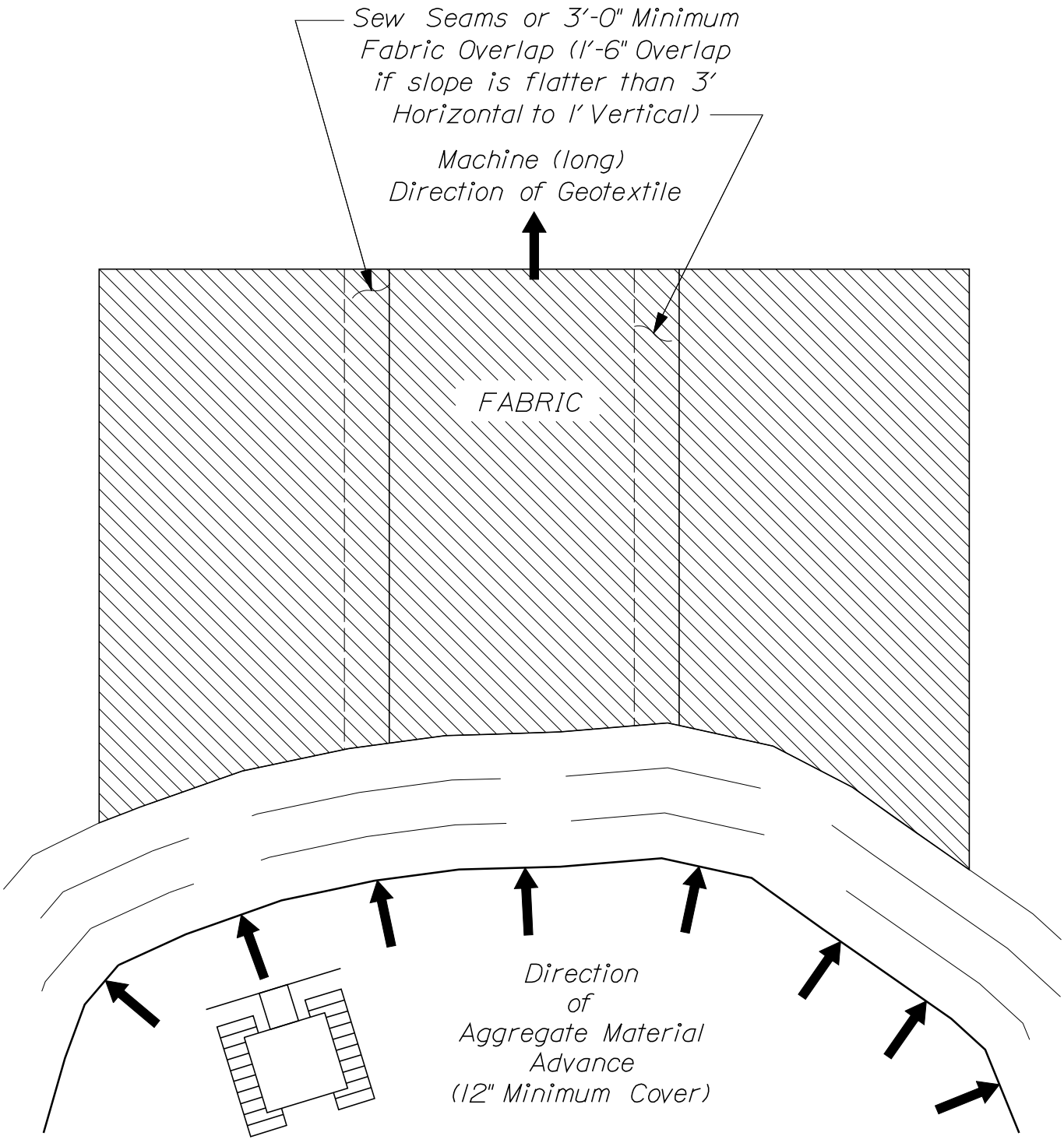

PLACEMENT OF FIRST LIFT OF COVER MATERIAL TO
~ TENSION GEOTEXTILE ON MODERATE GROUND CONDITIONS ~
(NO MUD WAVE).

GEOTEXTILE PLACEMENT

620(01)

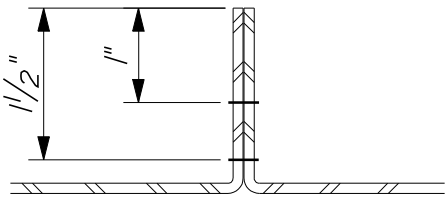

FLAT or PRAYER Seam
Type SSA-2

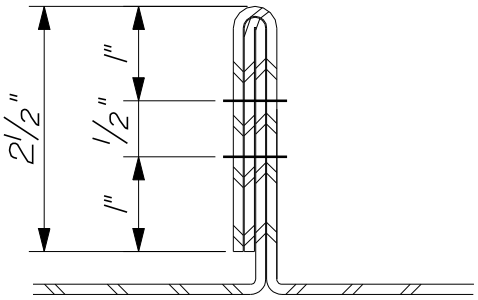

J Seam
Type SSN-1

~ TYPES OF SEAMS ~

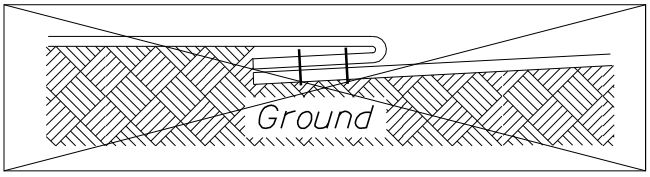

Improper Placement
(cannot inspect or repair)

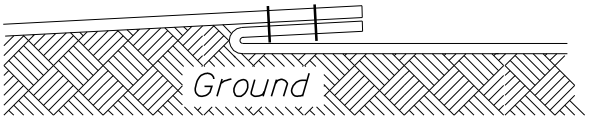

Proper Placement
(seam up)

~ SEAM PLACEMENT ~

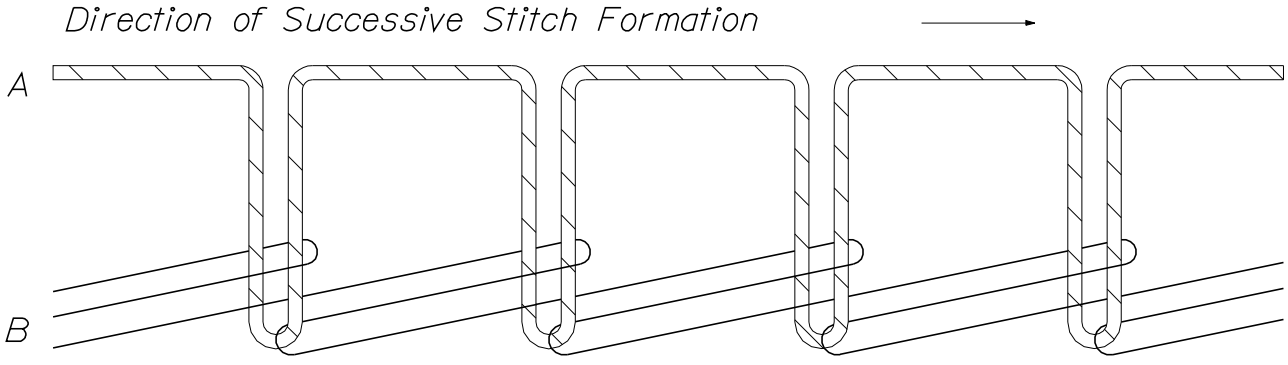

~ CLASS 401 TYPE STITCH ~

NOTE:

This type of stitch shall be formed with two threads: one needle thread "A", and one looper thread, "B". loops of thread "A" shall be passed through the material and interlaced and interlooped with loops of thread "B". The interloopings shall be drawn against the underside of the bottom ply of material.

GEOTEXTILE SEAMING

620(02)

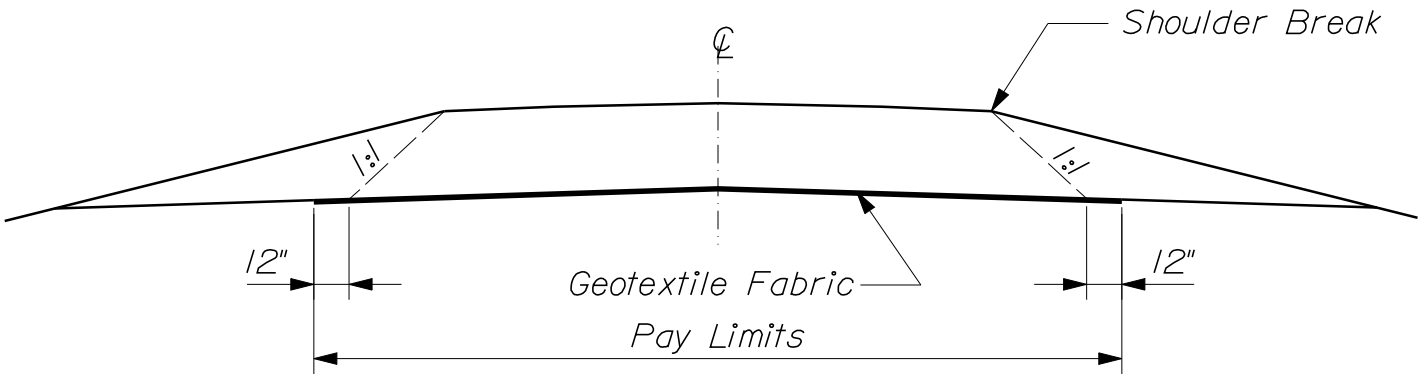

~ GEOTEXTILE AT SUBGRADE ~

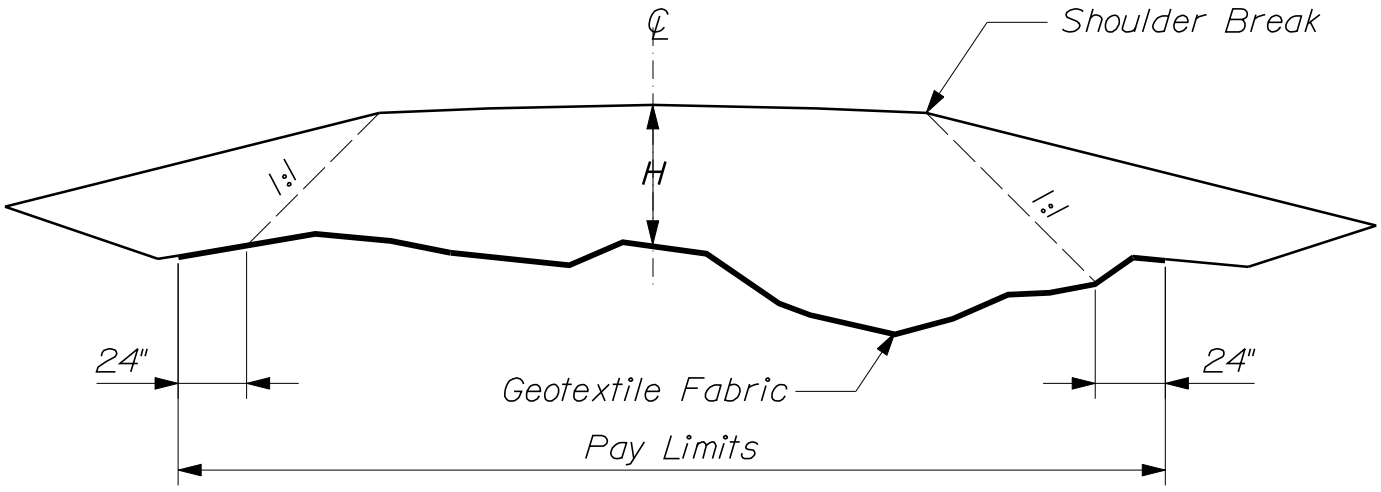

~ GEOTEXTILE ON OLD GROUND ~

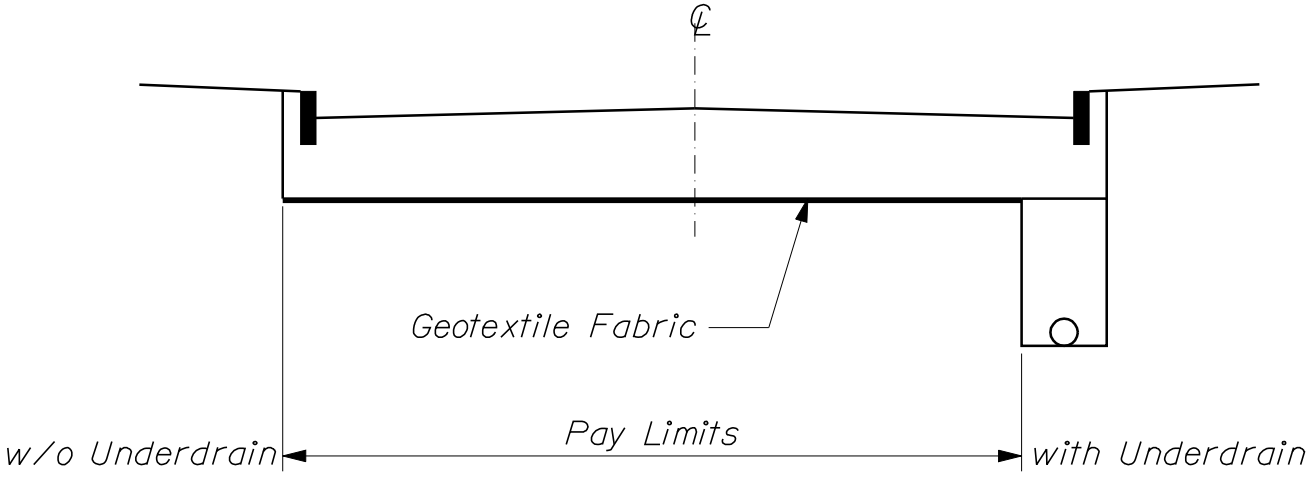

~ BOX SECTION ~

LATERAL LIMITS IN A ROADWAY

620(03)

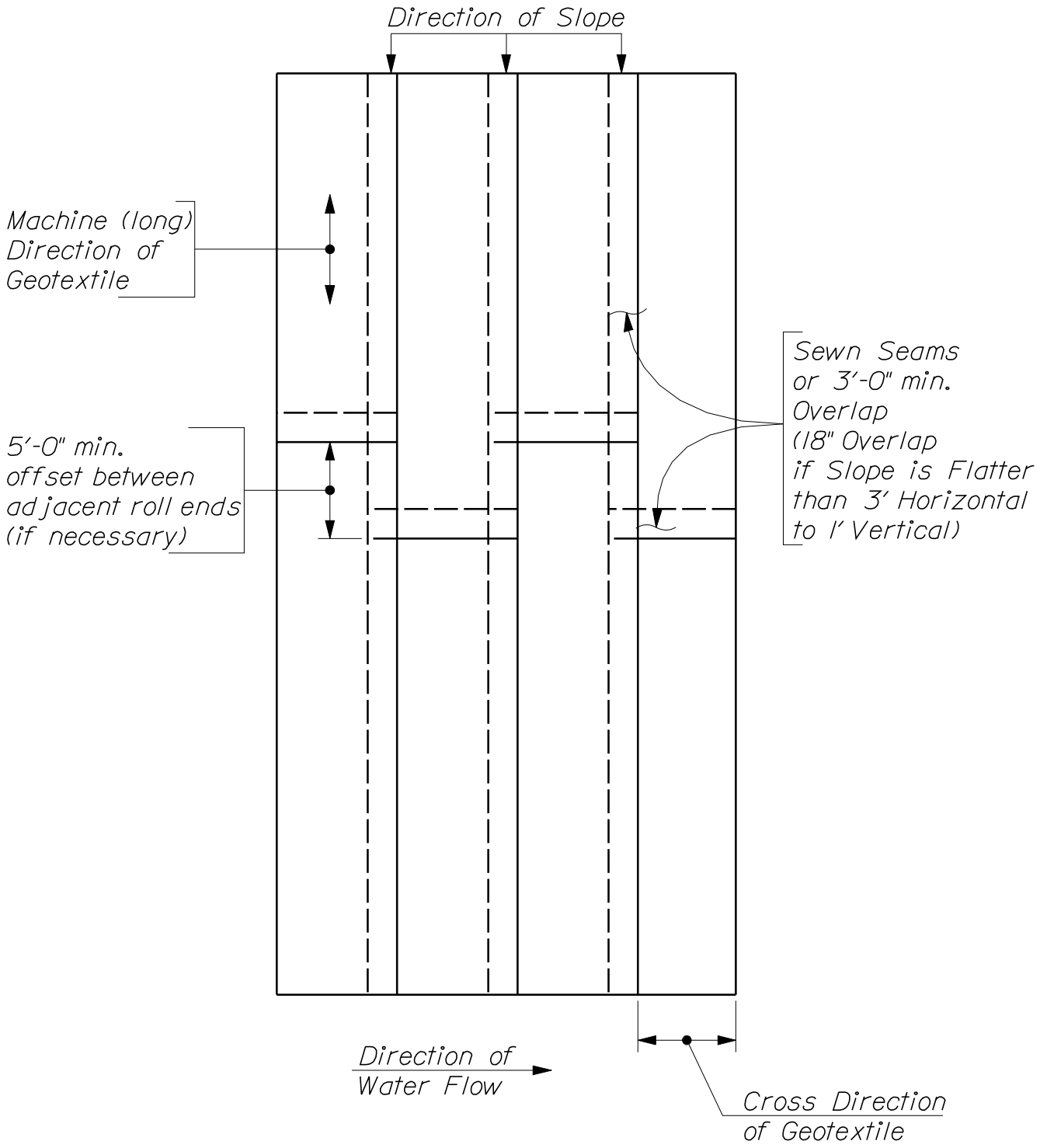

~ PLAN VIEW ~

GEOTEXTILE PLACEMENT FOR PROTECTION OF SLOPES ADJACENT TO STREAMS & TIDAL AREAS

620(04)

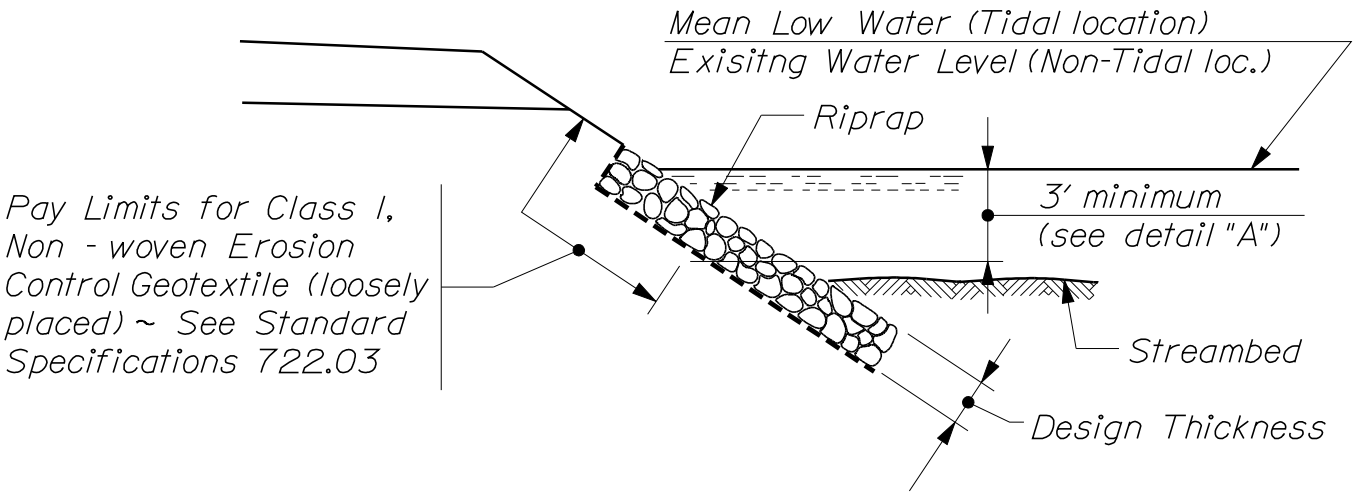

~ AT ROADWAY SLOPES ~

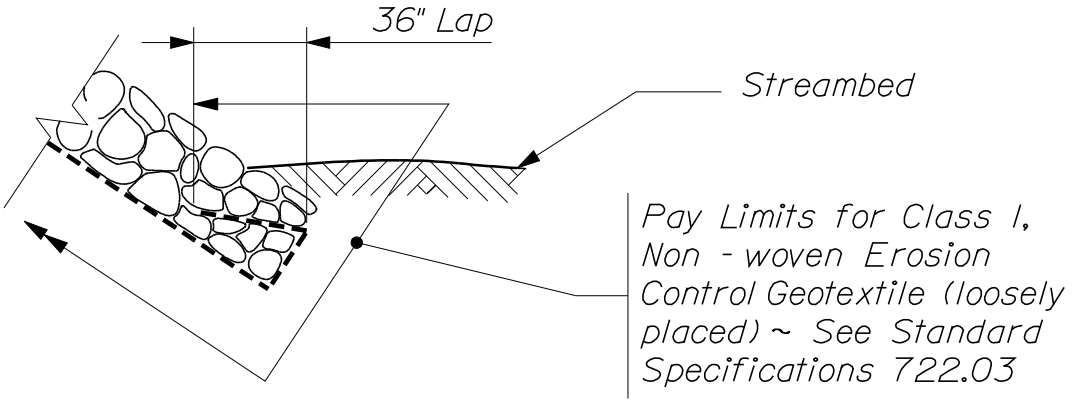

~ DETAIL "A" ~

(For use where water depth is less than 3')

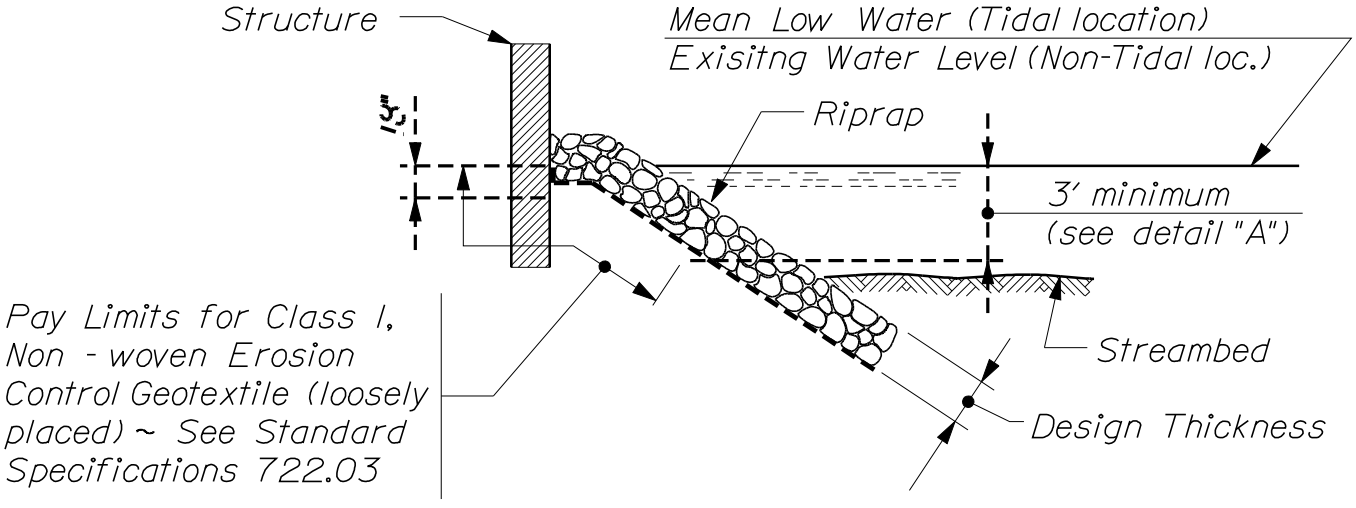

~ AT STRUCTURE ~

GEOTEXTILE PLACEMENT FOR PROTECTION OF SLOPES ADJACENT TO STREAMS & TIDAL AREAS

620(05)

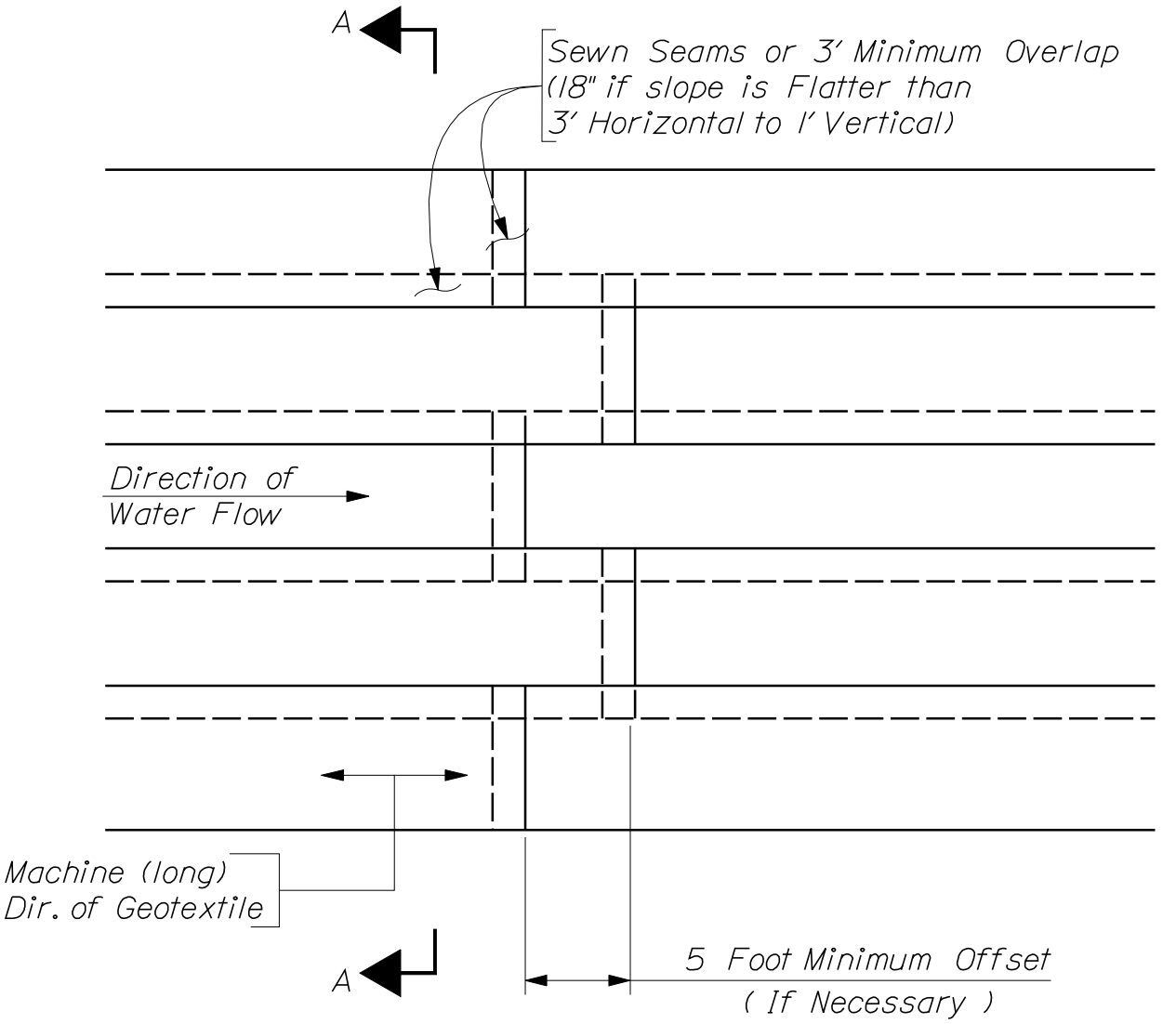

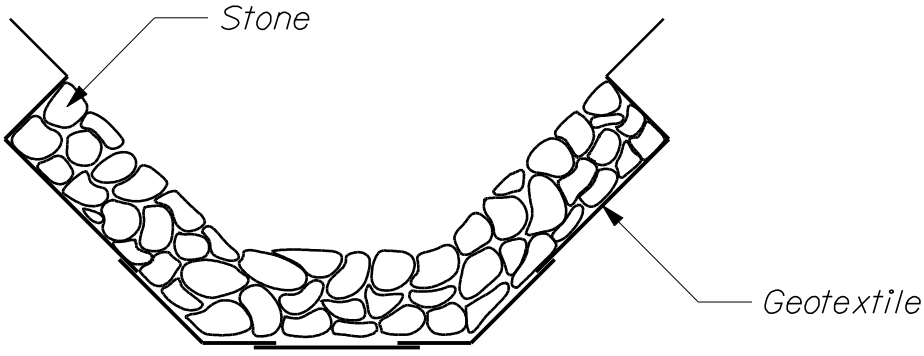

~ SECTION A-A ~

GEOTEXTILE PLACEMENT SCHEME FOR PROTECTION OF DITCHES, SHALLOW CHANNELS, ETC.

620(06)

NOTES:

1. Staking may be required to assure straight trunk. Staking must follow proper industry standards.

2. Remove top 1/3 of burlap and wire basket. Existing ball shall be even or slightly above existing grade.

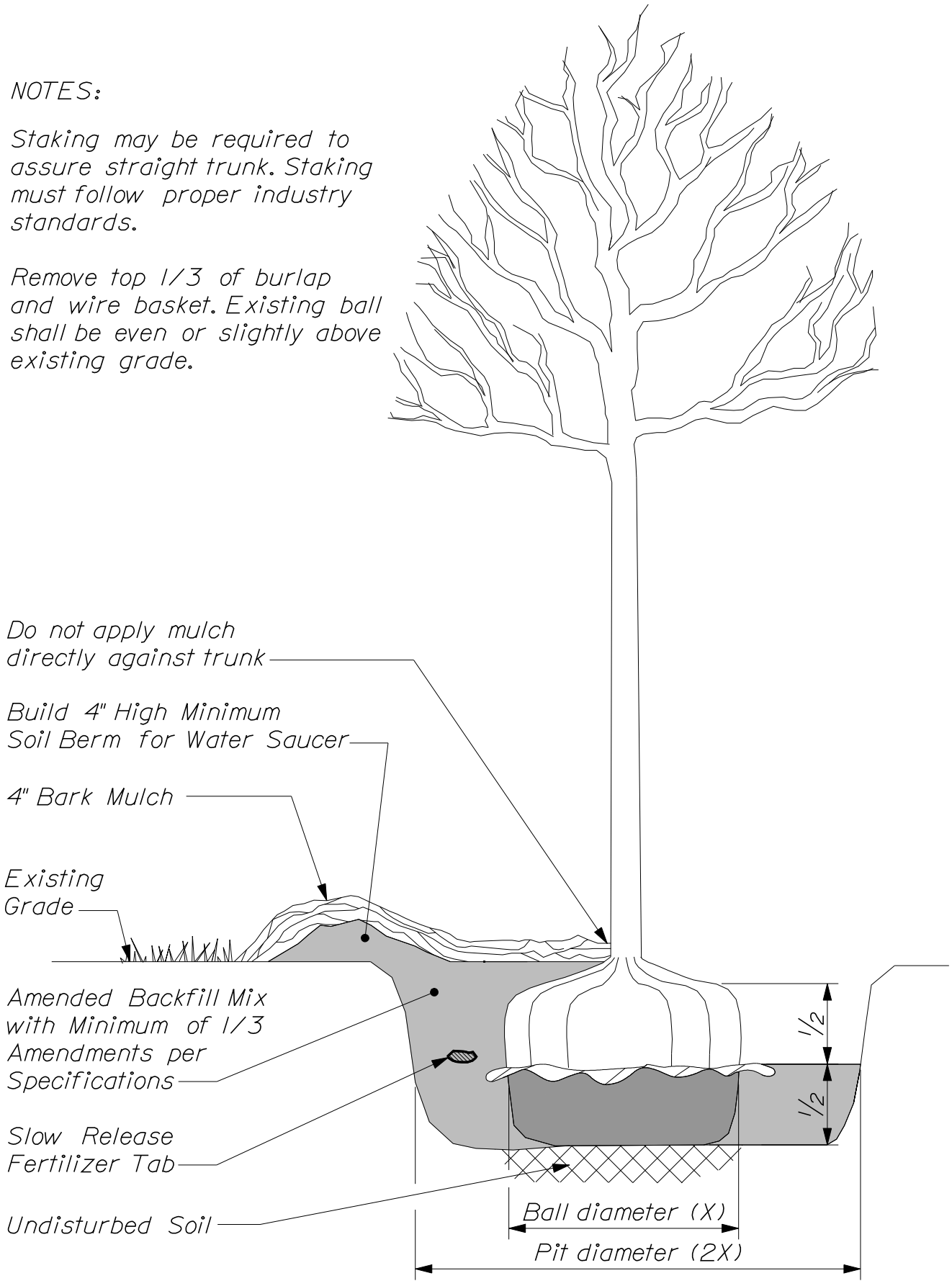

B & B TREE PLANTING DETAIL

621(01)

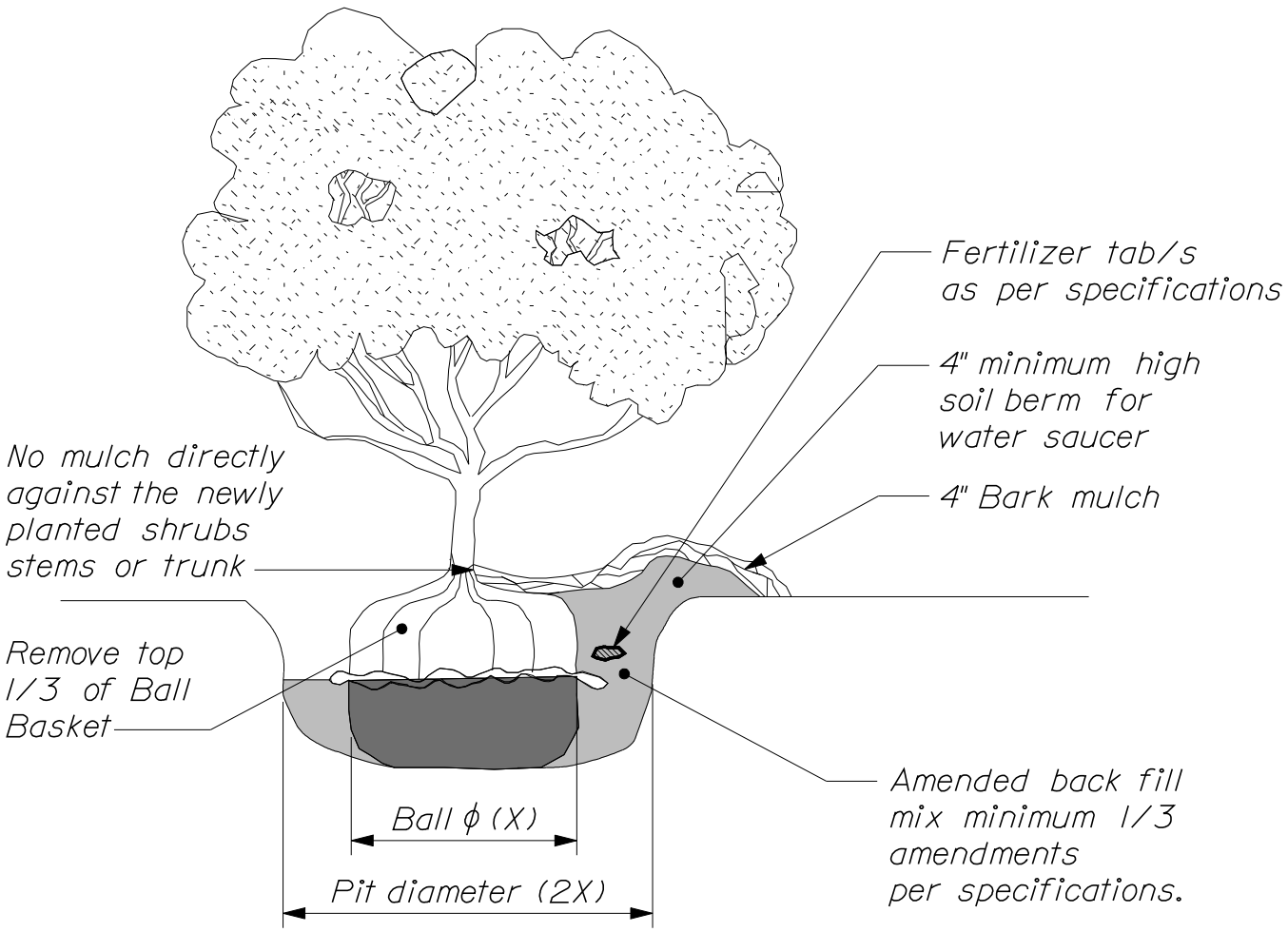

B & B SHRUB PLANTING DETAIL

621(02)

NOTES:

1. All plantings shall comply with current Maine Department of Transportation Standard Specifications.

2. Remove and properly dispose of containers, tags, labels, and flagging tape, unless otherwise directed by an Authorized MaineDOT employee.

3. Prune broken and dead branches at time of planting.

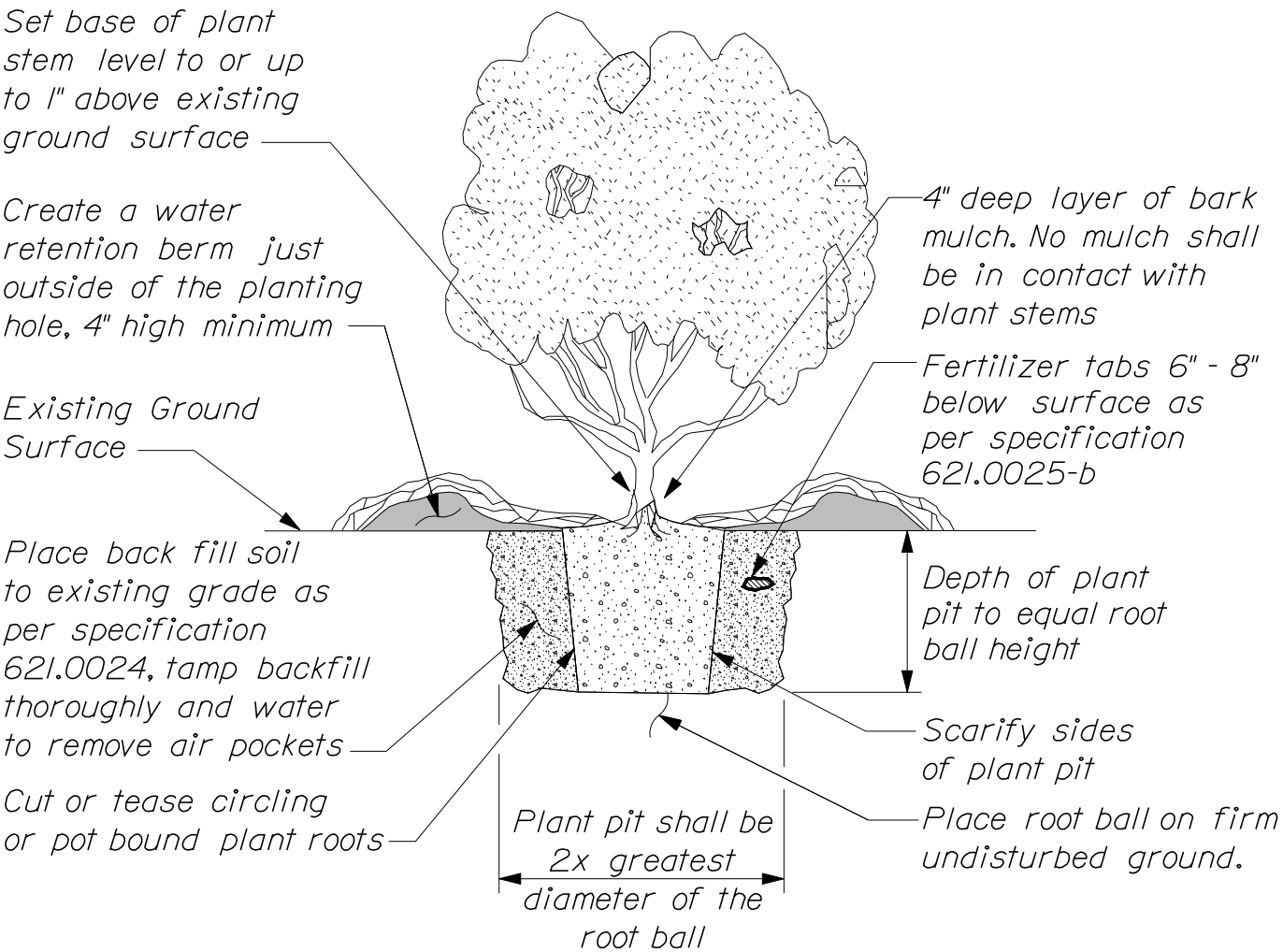

CONTAINER TREE/SHRUB PLANTING DETAIL

621(03)

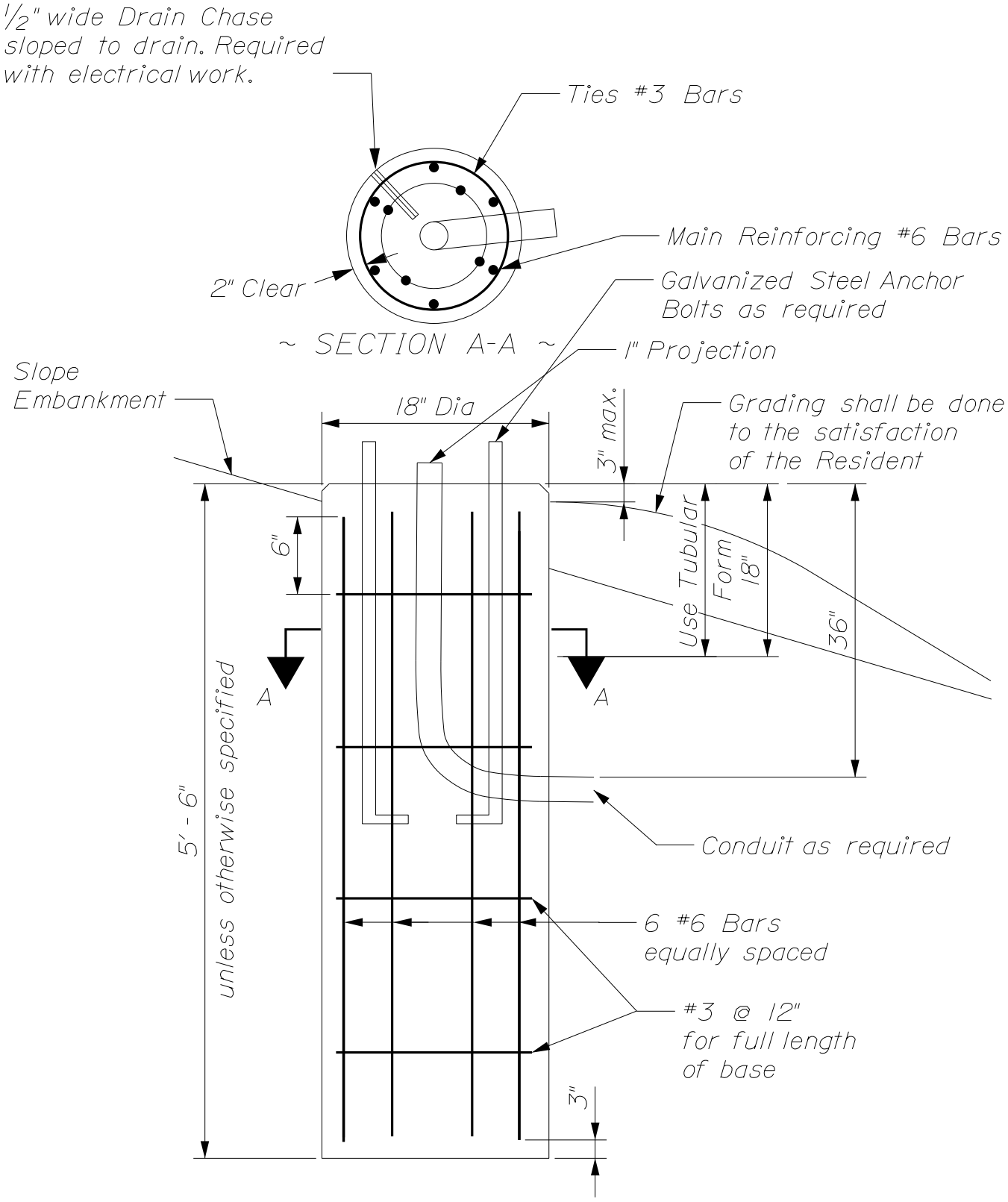

~ 18 INCH FOUNDATION ~
ITEM NO. 626.411

FOUNDATIONS FOR TRAFFIC SIGNALS, HIGHWAY SIGNING AND LIGHTING

626(01)

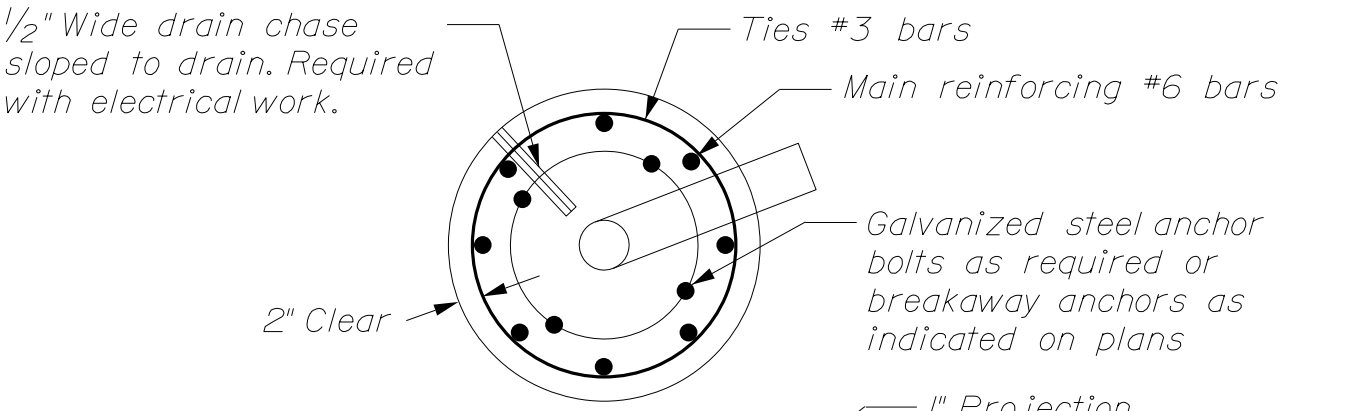

~ SECTION A-A ~

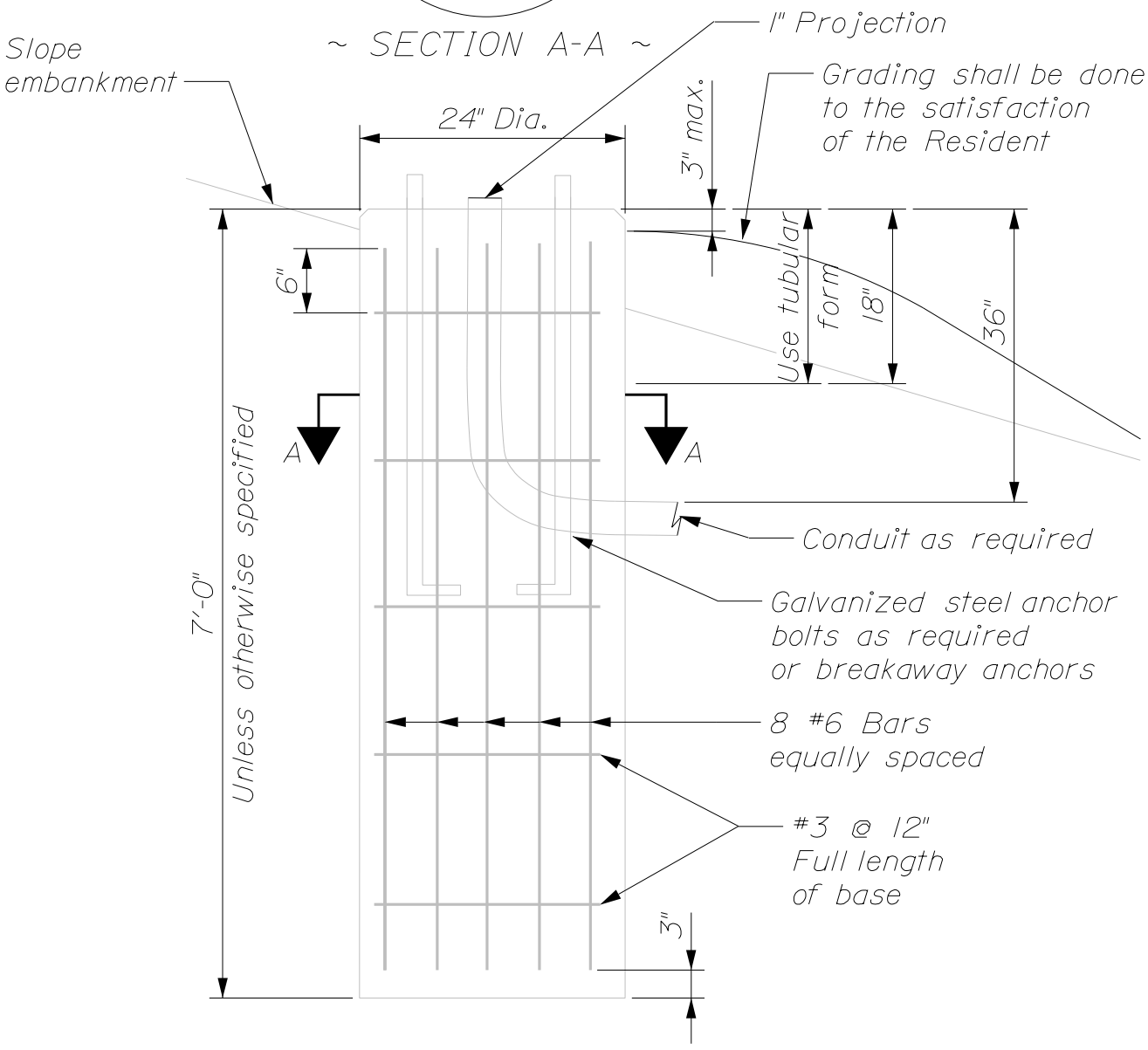

~ 24 INCH FOUNDATION ~
ITEM NO. 626.421

FOUNDATIONS FOR TRAFFIC SIGNALS, HIGHWAY SIGNING AND LIGHTING

626(02)

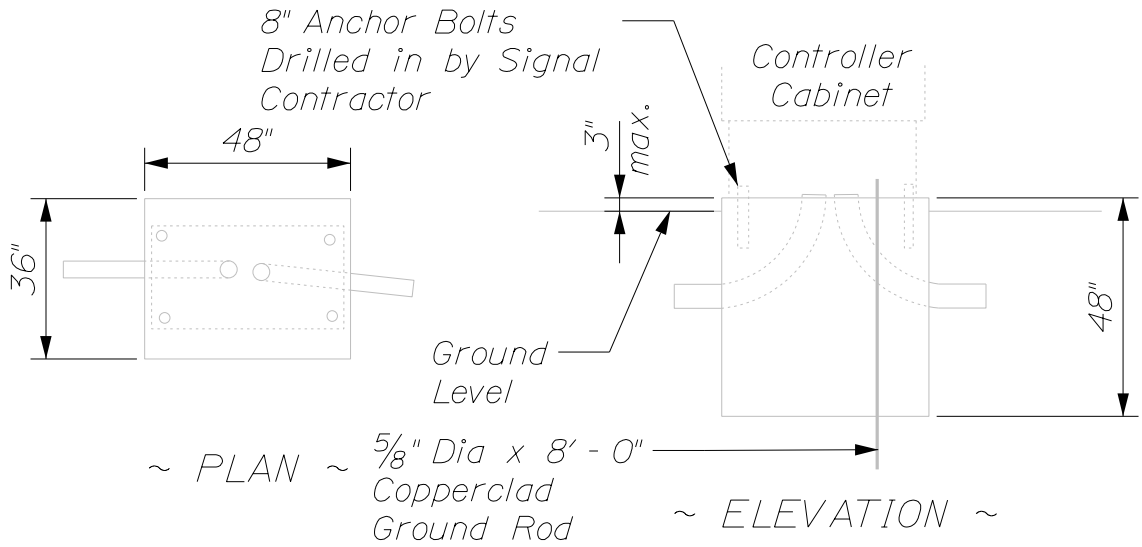

~ GROUND MOUNTED CONTROLLER CABINET FOUNDATION ~

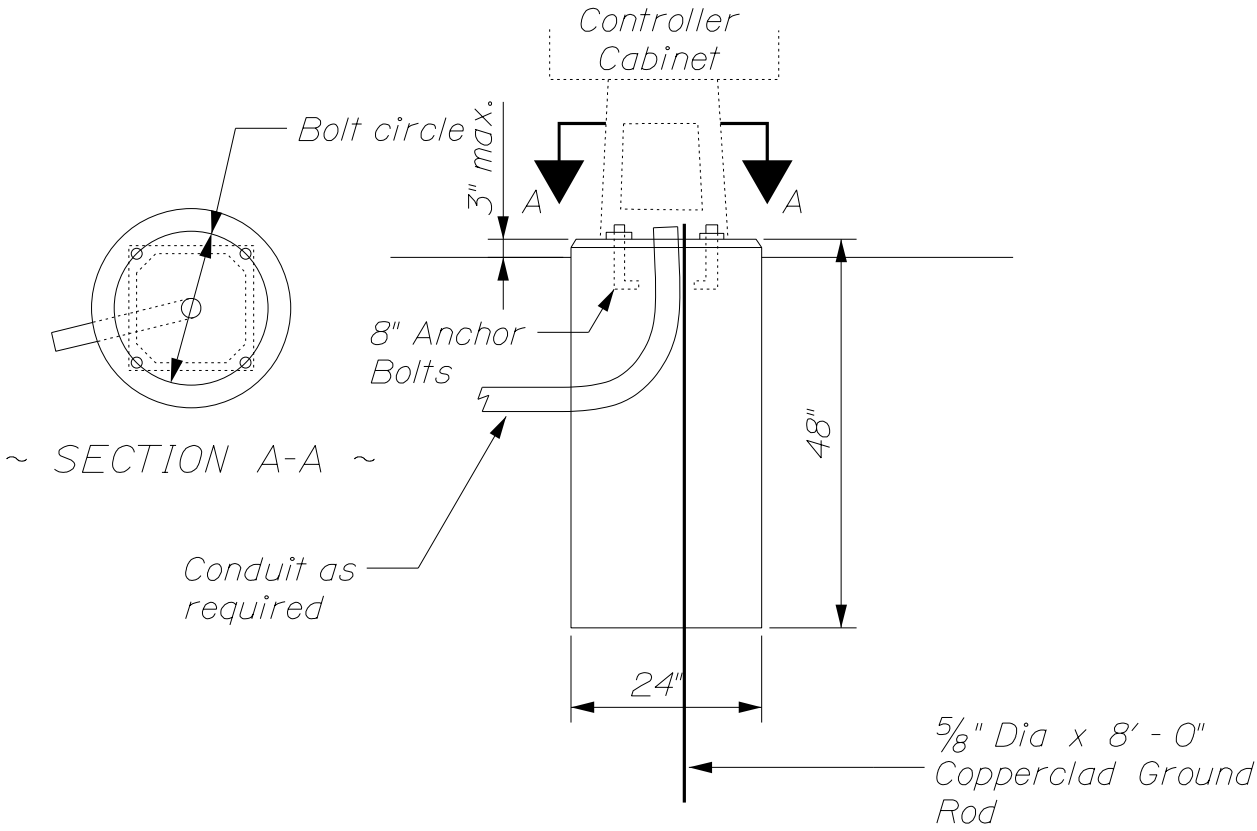

~ CONTROLLER CABINET FOUNDATION ~
ITEM NO. 626.35

FOUNDATIONS FOR TRAFFIC SIGNALS, HIGHWAY SIGNING AND LIGHTING

626(03)

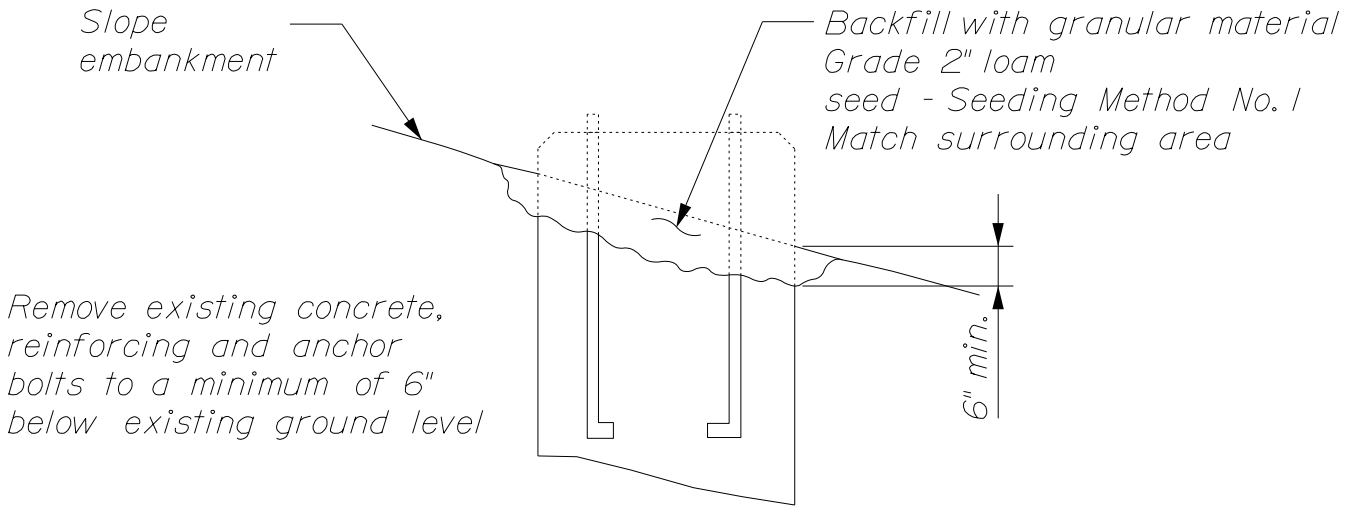

~ REMOVAL OF CONCRETE FOUNDATIONS ~
ITEM NO. 626.36

FOUNDATIONS FOR TRAFFIC SIGNALS, HIGHWAY SIGNING AND LIGHTING

626(04)

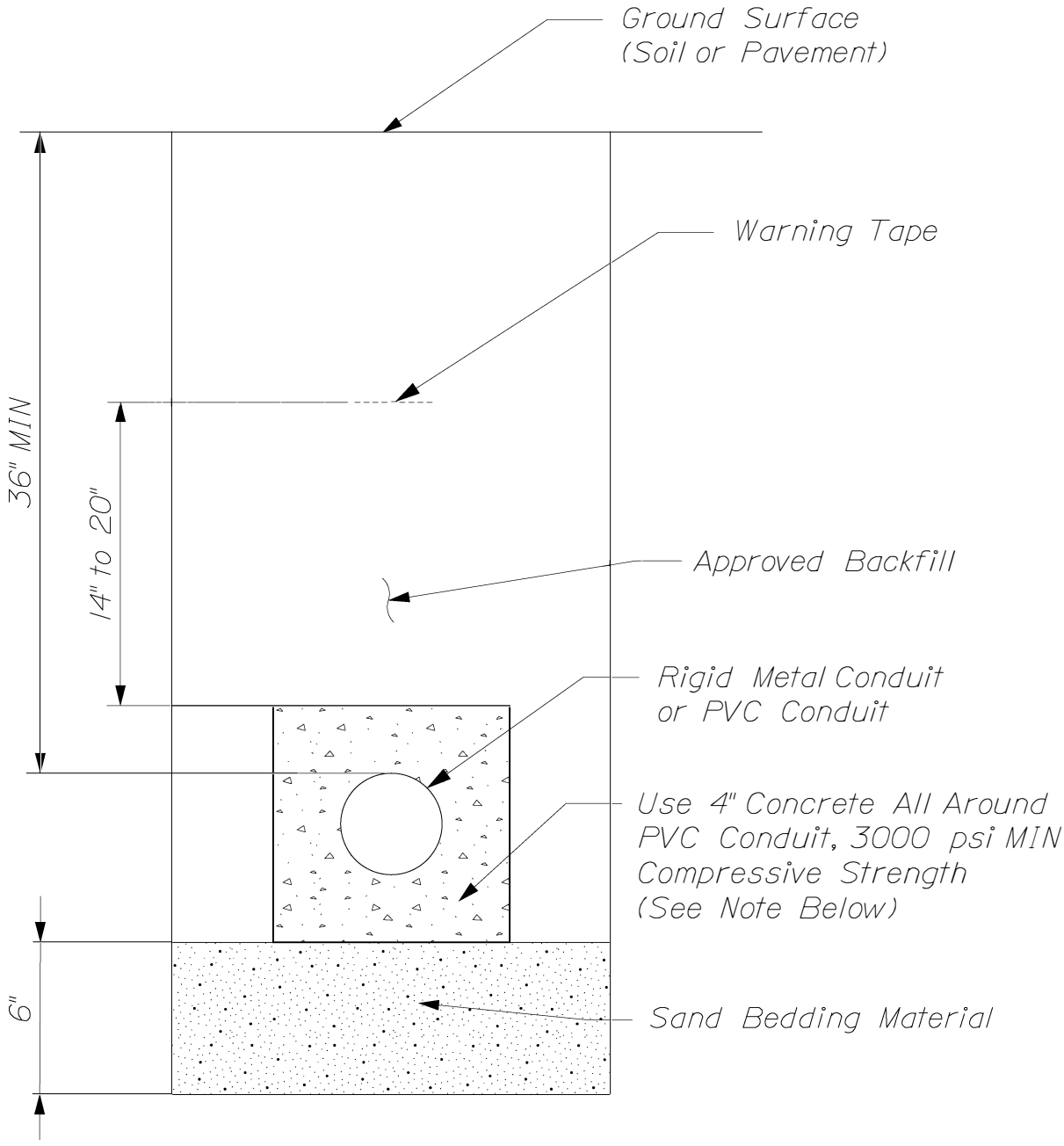

NOTE: All PVC Conduits Containing Electrical Supply Lines Feeding Secondary Utility Power To Meter Breaker Panels or Directly To Traffic Signalization Control Cabinets or Highway Lighting Breaker Boxes Shall Be Concrete Encased.

CONDUIT TRENCH FOR TRAFFIC SIGNALS, HIGHWAY SIGNING AND LIGHTING

626(05)

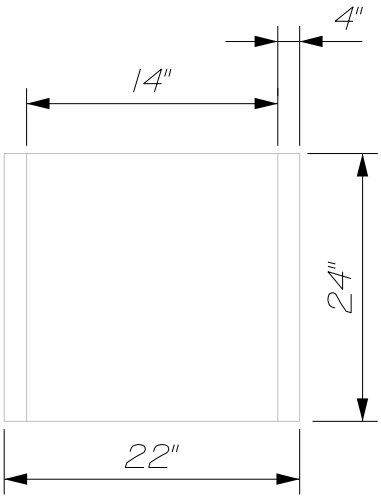

~ ELEVATION ~

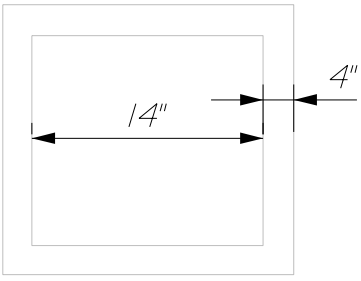

~ TOP ~

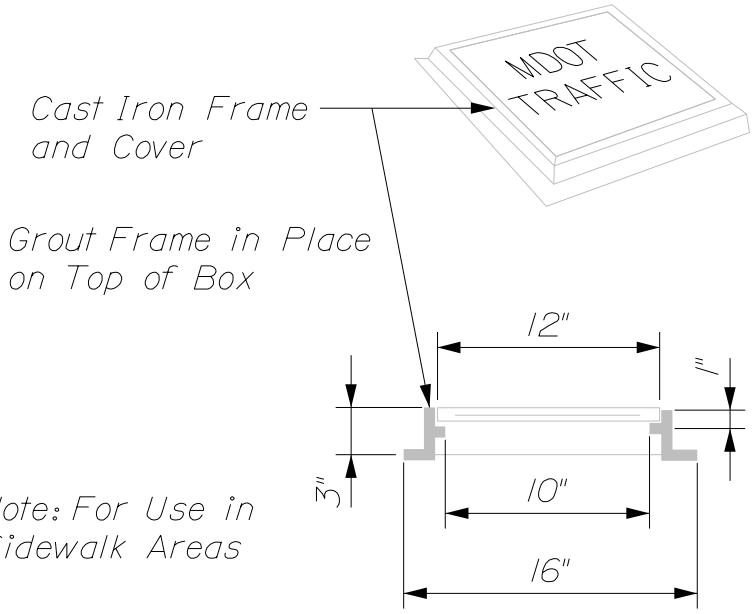

Note: For Use in Sidewalk Areas

~ JUNCTION BOX COVER AND FRAME ~

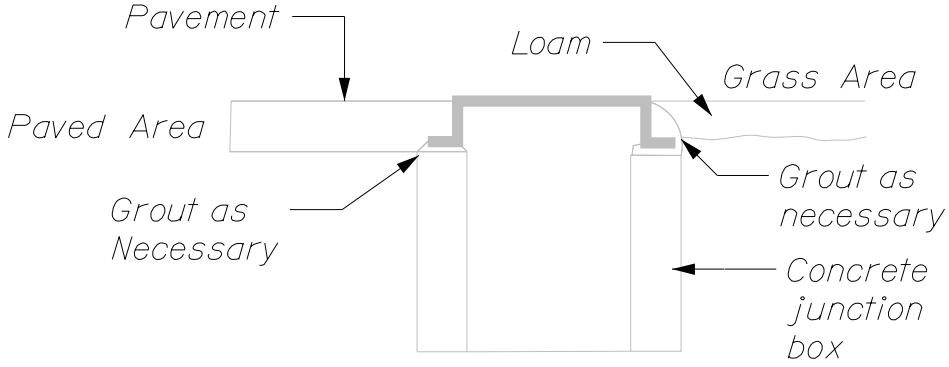

Install junction box on grade.
Grout as necessary as shown.

~ PRECAST CONCRETE JUNCTION BOX ~
ITEM NO. 626.11

ELECTRICAL JUNCTION BOX FOR TRAFFIC SIGNALS, AND LIGHTING

626(06)

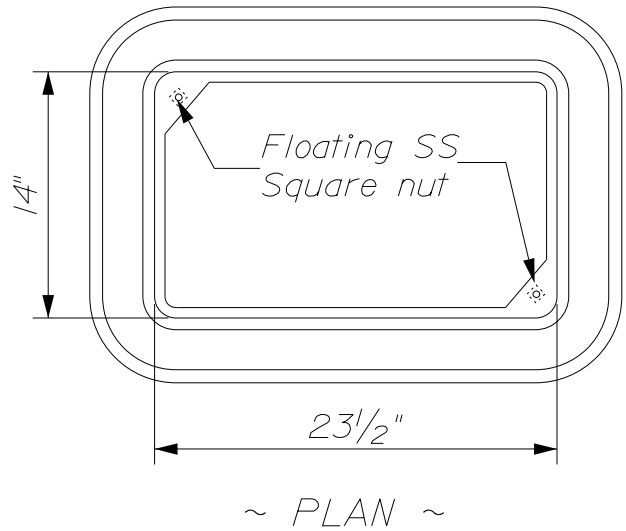

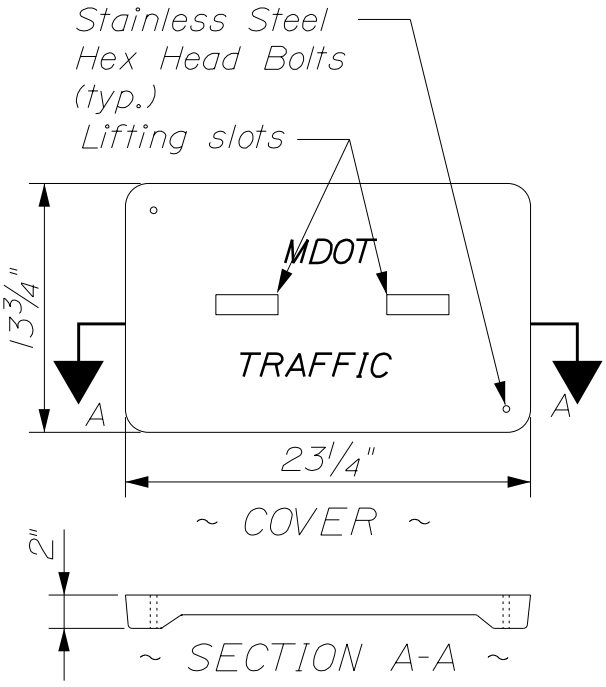

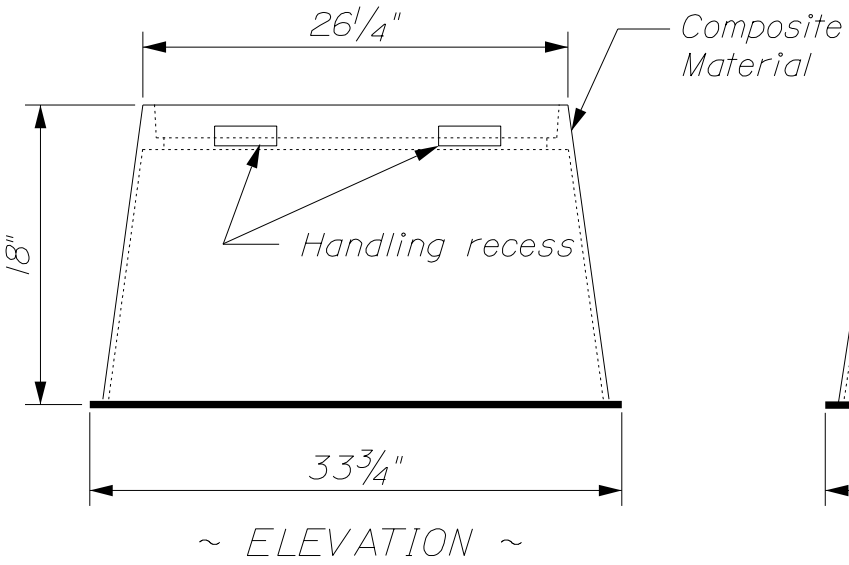

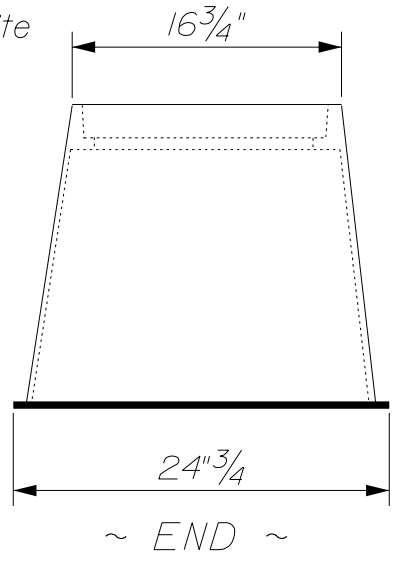

13" x 24" Flared Wall
JUNCTION BOX
ITEM NO. 626.11

NOTE:
The Junction Box shall be capable of supporting incidental traffic loads of 20,000 pounds without distortion or failure.
Junction Boxes shall be as listed on MaineDOT's Qualified Products List of Traffic Signal and Lighting Materials.
Dimensions show are representative and may have slightly different dimensions.

ELECTRICAL JUNCTION BOX FOR TRAFFIC SIGNALS, AND LIGHTING

626(07)

~ GENERAL NOTES ~

All pavement markings shall be in accordance with the most recent (Manual on Uniform Traffic Control Devices for Streets and Highways), U.S. DOT, FHWA.

Temporary Pavement Markings over Winter Shutdown shall include Yellow Center Line, And White edge lines.

~ SYMBOLS AND ARROWS ~

Stroke width and line width variance shall be no more than ± 1/4" from dimensions shown.

Square foot dimensions shown are pay dimensions, paid by Item No. 627.75.

Grid is marked in 4" intervals except as noted. Symbols and letters shall be proportioned according to grid as shown.

Spacing between characters shall be one unit, but visual spacing may be used.

Spacing between symbol and stop line shall be a minimum of 20'. Spacing between symbol and symbol shall be a minimum of 50' or as directed by the Resident.

Pavement marking lines on interstates shall be 6" in width.

6" crosswalk lines shall be paid for by Item No. 627.75.

4" lines for parking spaces shall be paid for by Item No. 627.75.

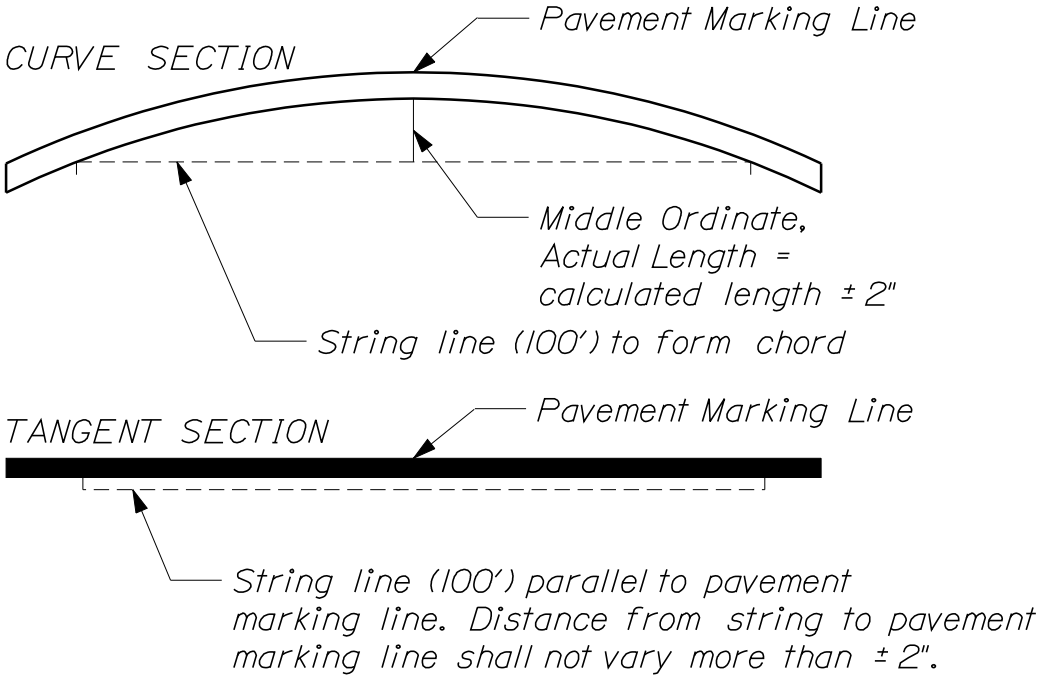

~ TOLERANCE FOR PAVEMENT MARKING LINES ~

PAVEMENT MARKING

627(01)

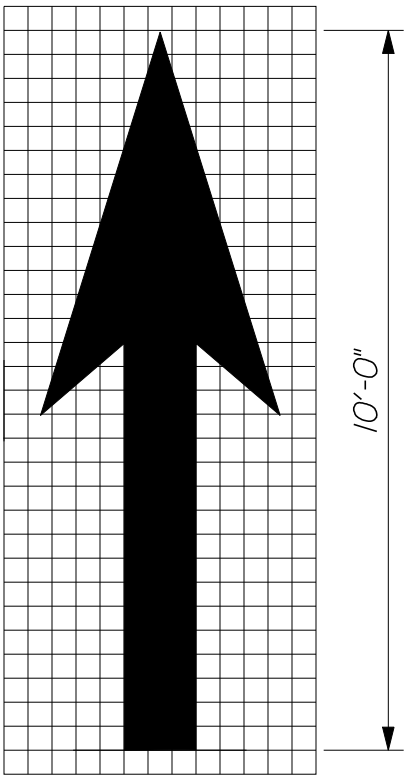

13 sq. ft.

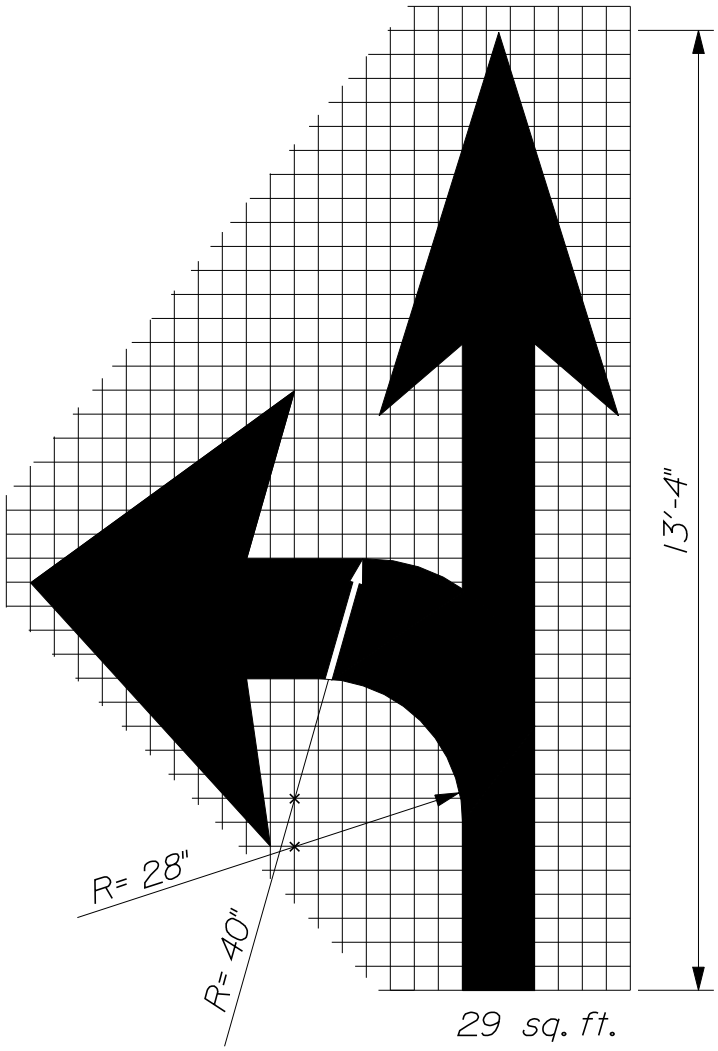

29 sq. ft.

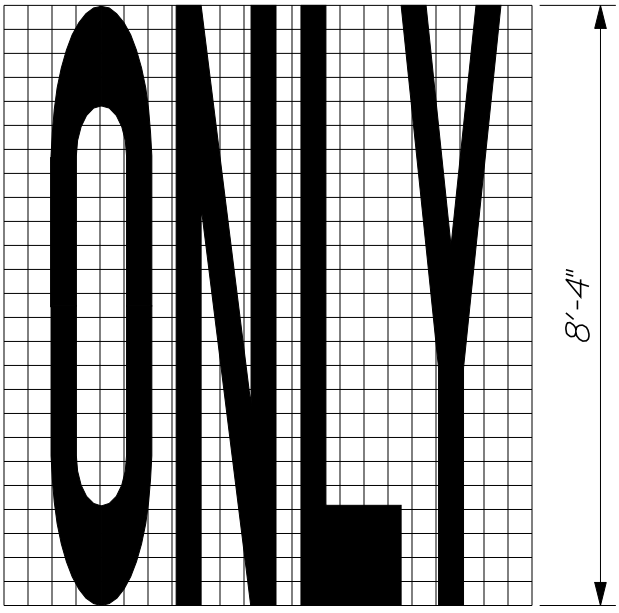

22 sq. ft.

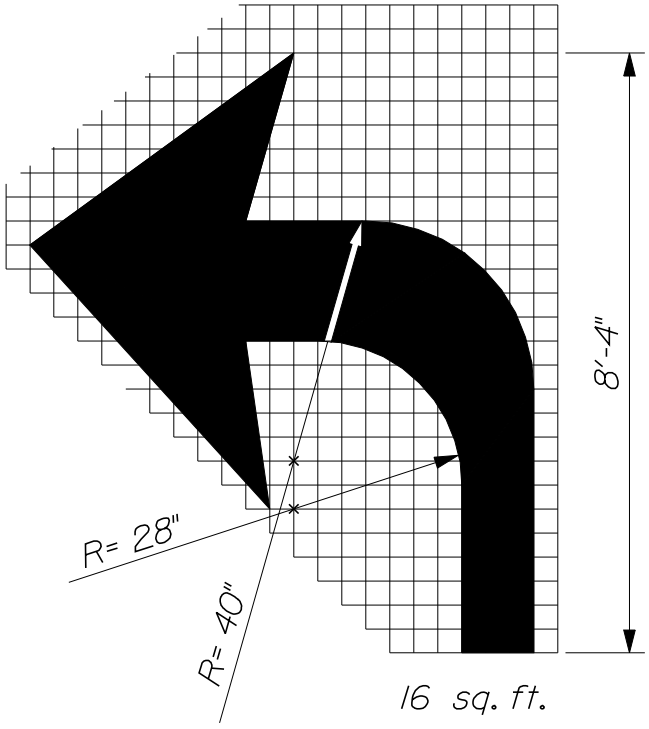

16 sq. ft.

NOTE: See page 627(01) for general notes on pavement markings.

PAVEMENT MARKING

Straight Arrow, Straight/Left Arrow, Left Arrow, & ONLY

627(02)A

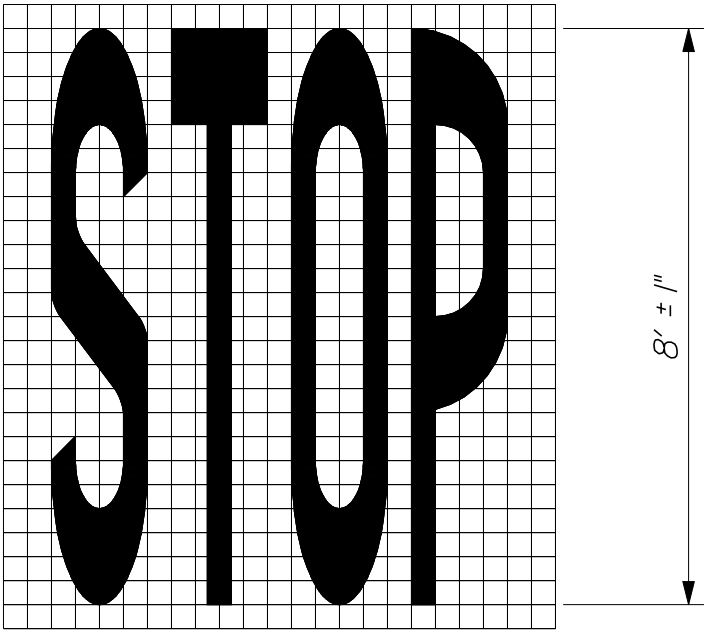

22 sq. ft.

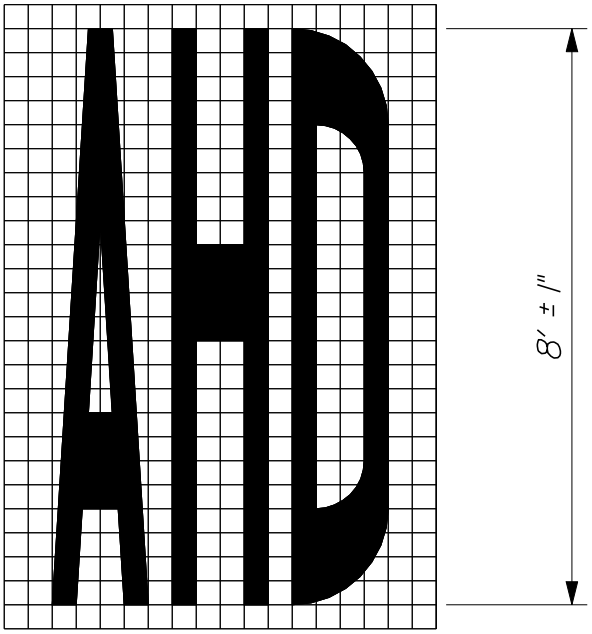

16 sq. ft.

NOTE: See page 627(01) for general notes on pavement markings.

PAVEMENT MARKING

STOP & AHEAD

627(02)B

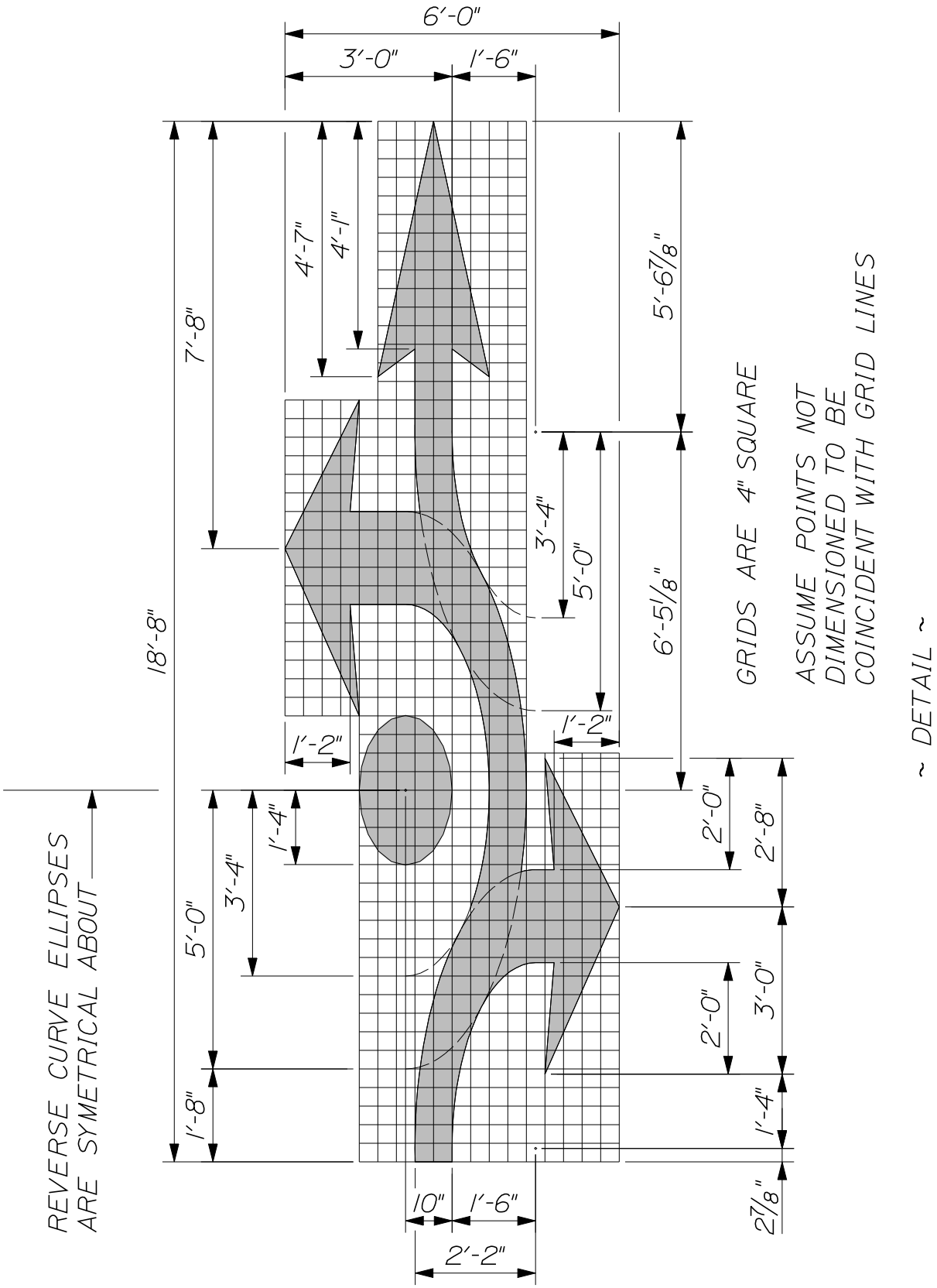

NOTE: See page 627(01) for general notes on pavement markings.

PAVEMENT MARKING

Roundabout Arrows

627(02)C

NOTE: See page 627(01) for general notes on pavement markings.

PAVEMENT MARKING

Roundabout Arrows

627(02)D

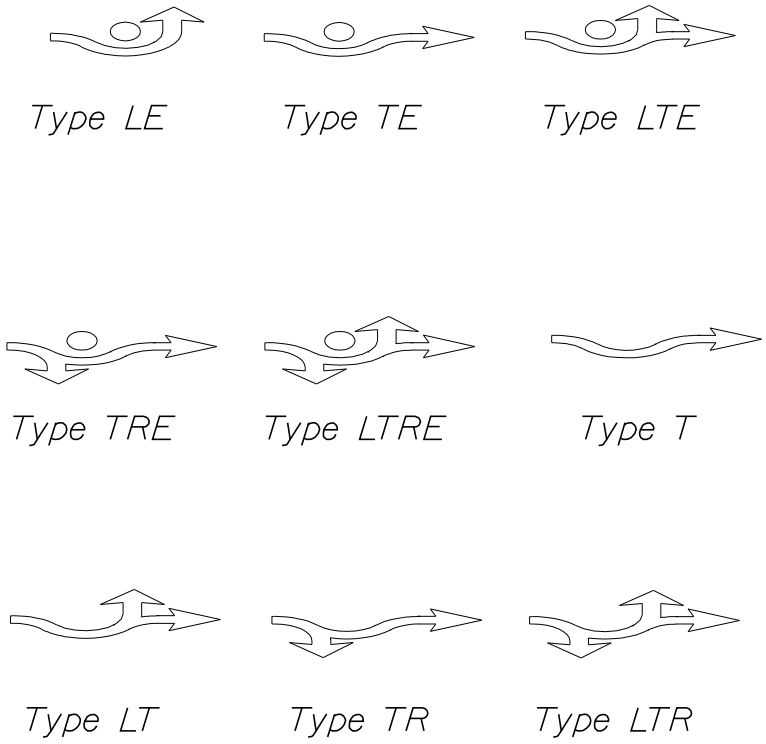

~ ROUNDABOUT PAVEMENT MARKING ARROWS ~

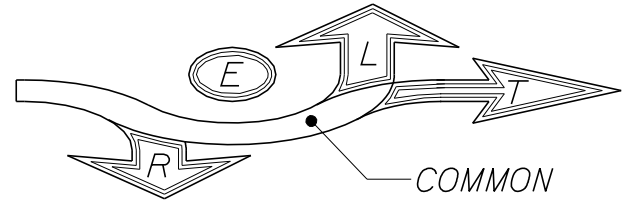

~ COMPONENT KEY ~

The labelled areas above correspond to the portions needed for each type of roundabout traffic arrows.

For example: the roundabout traffic arrow type tre requires the "common", "T", "R", and "E" areas.

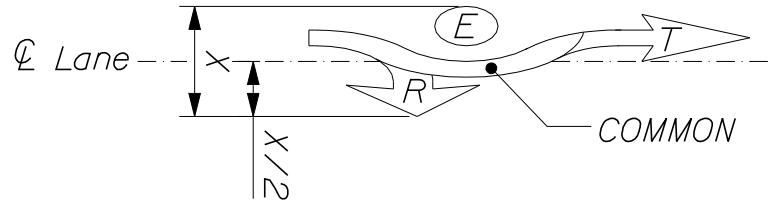

Center the arrow on the lane centerline between the lateral extremities of that arrow type.

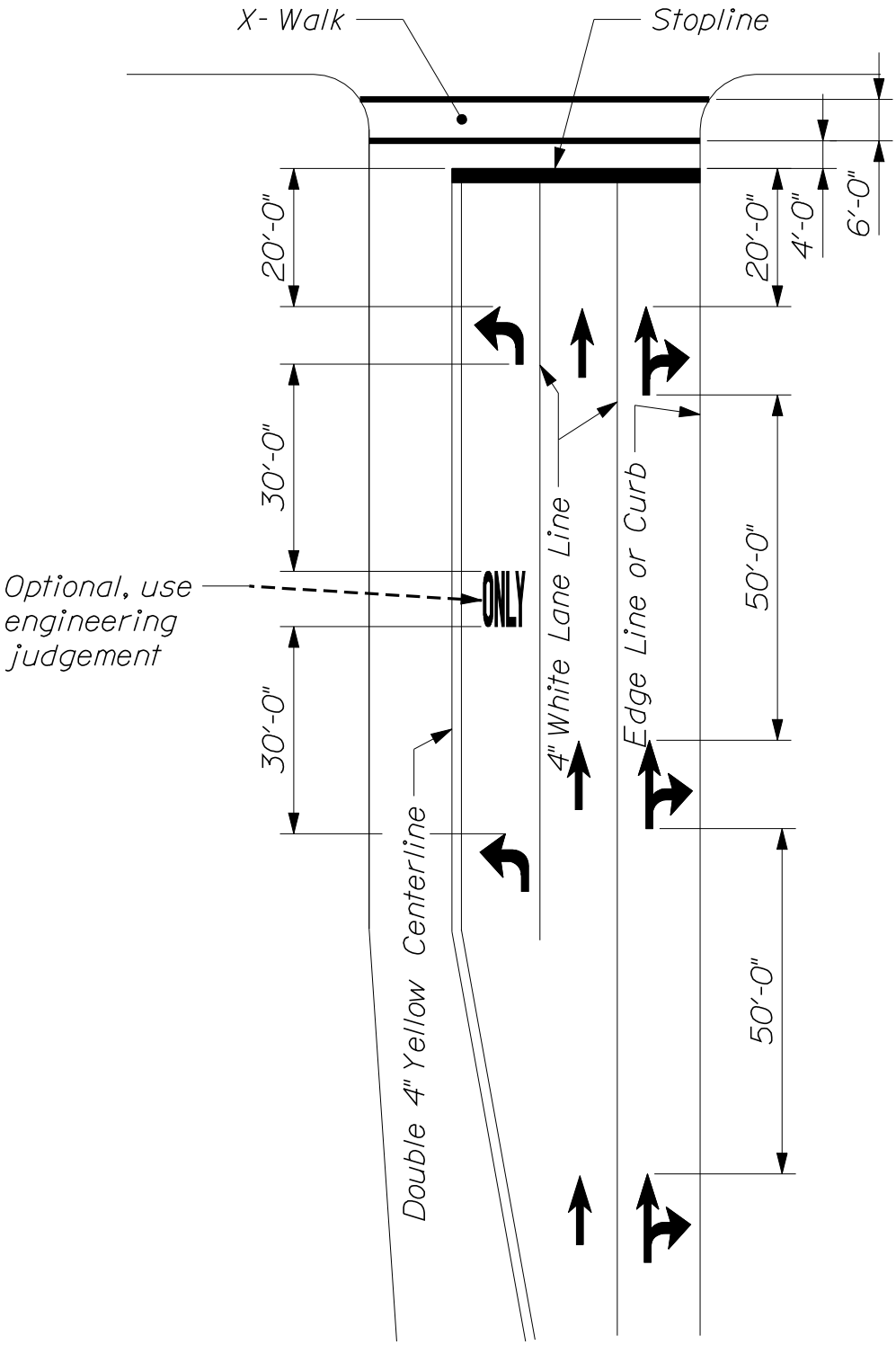

~ TYPICAL PLACEMENT OF PAVEMENT MARKING SYMBOLS AT SIGNALIZED INTERSECTIONS ~

PAVEMENT MARKING

627(03)

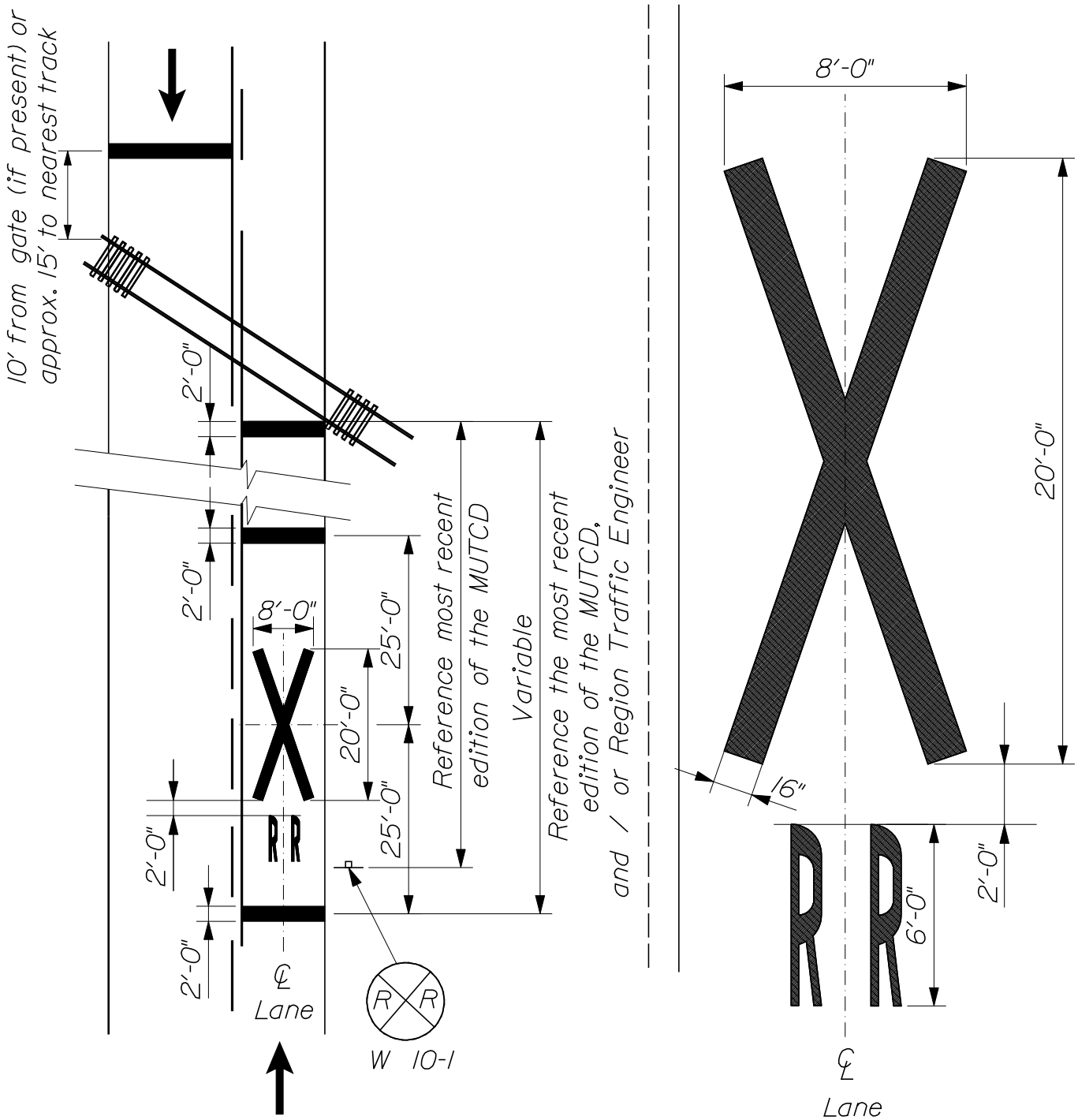

PAVEMENT MARKINGS AT RAILROAD GRADE CROSSINGS

627(04)

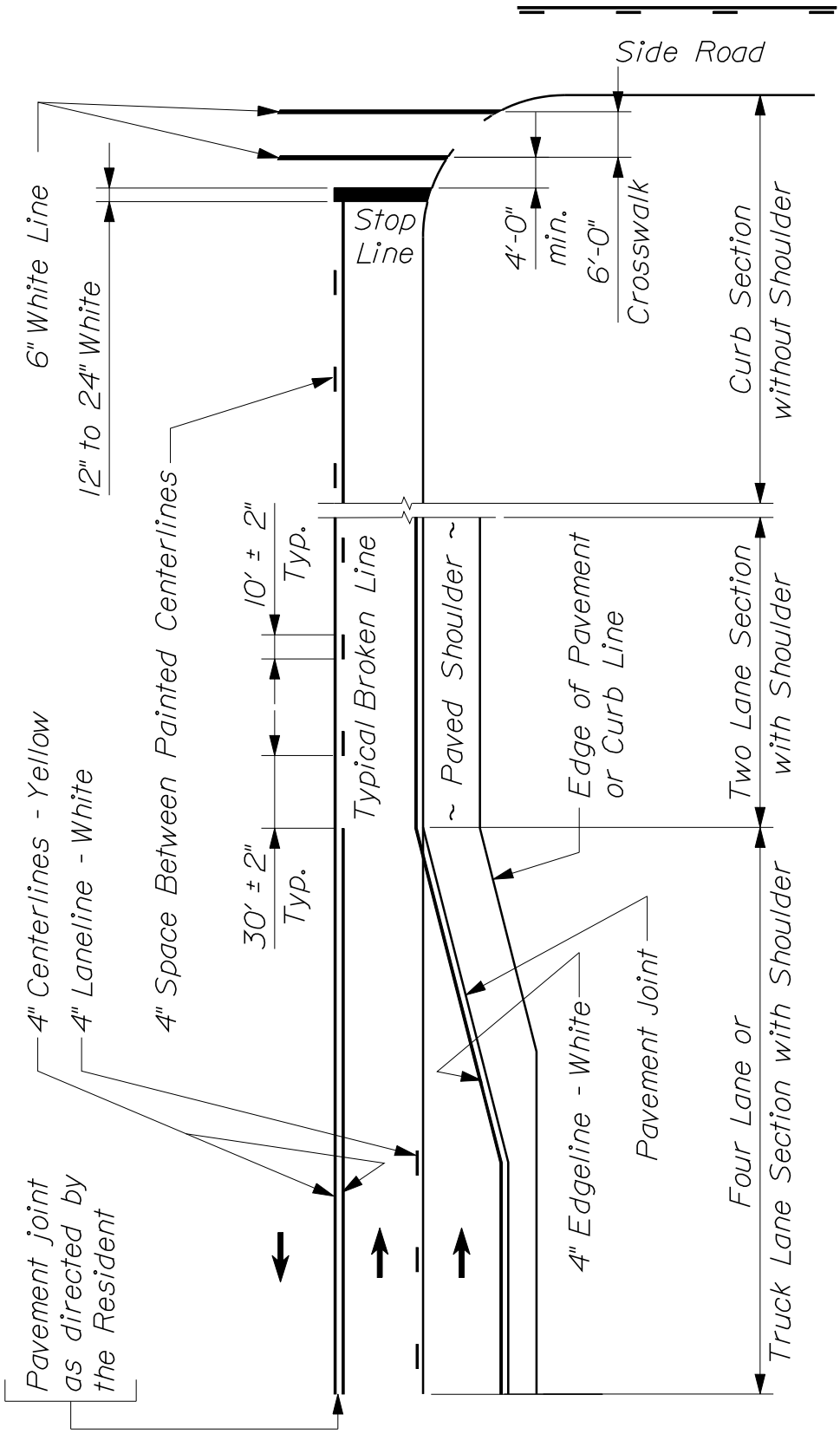

PAVEMENT MARKING
TYPICAL TWO - WAY ROADWAY

627(05)

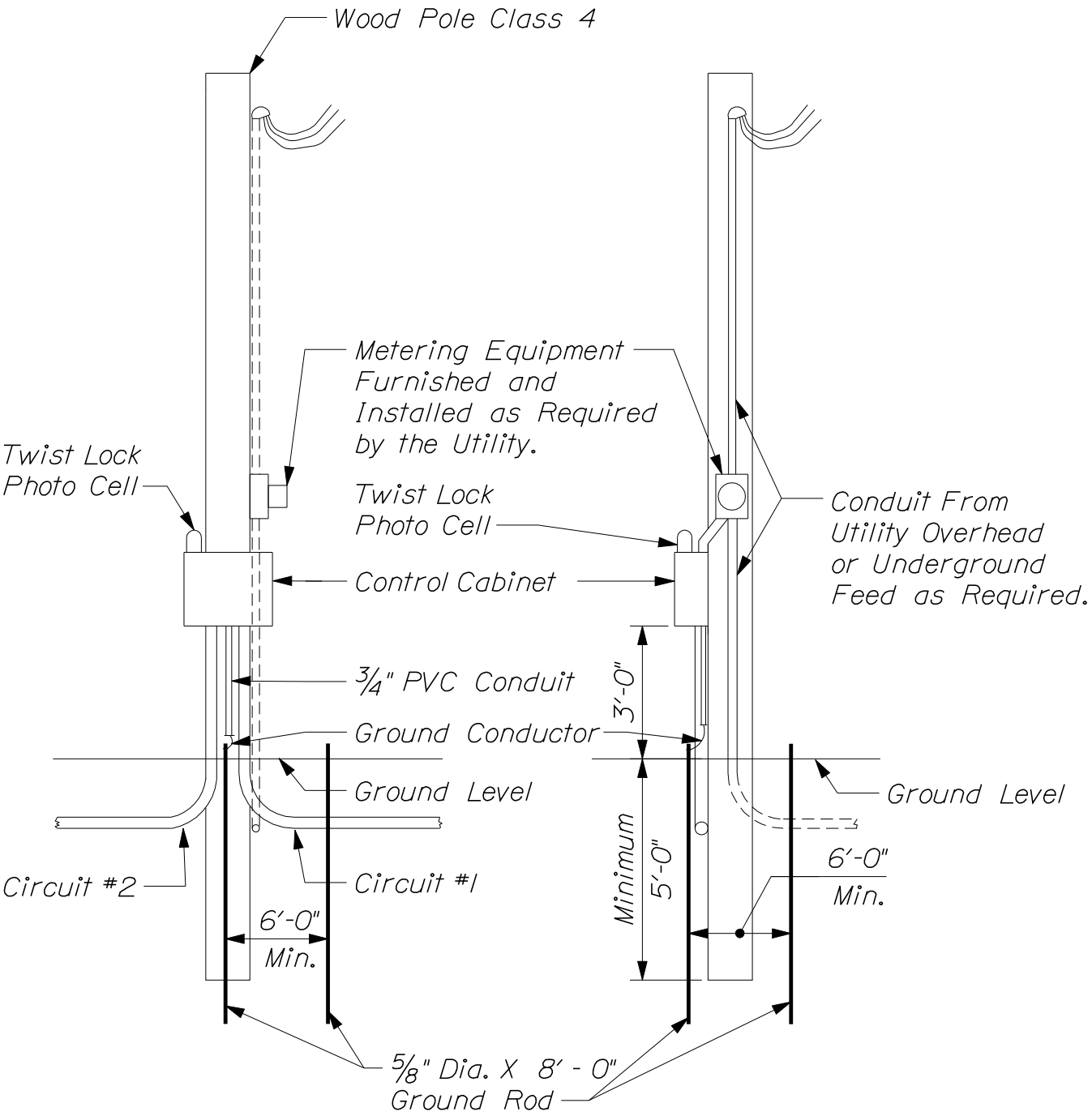

~ FRONT ~ ~ SIDE ~

~ SERVICE POLE ~

HIGHWAY LIGHTING

634(01)

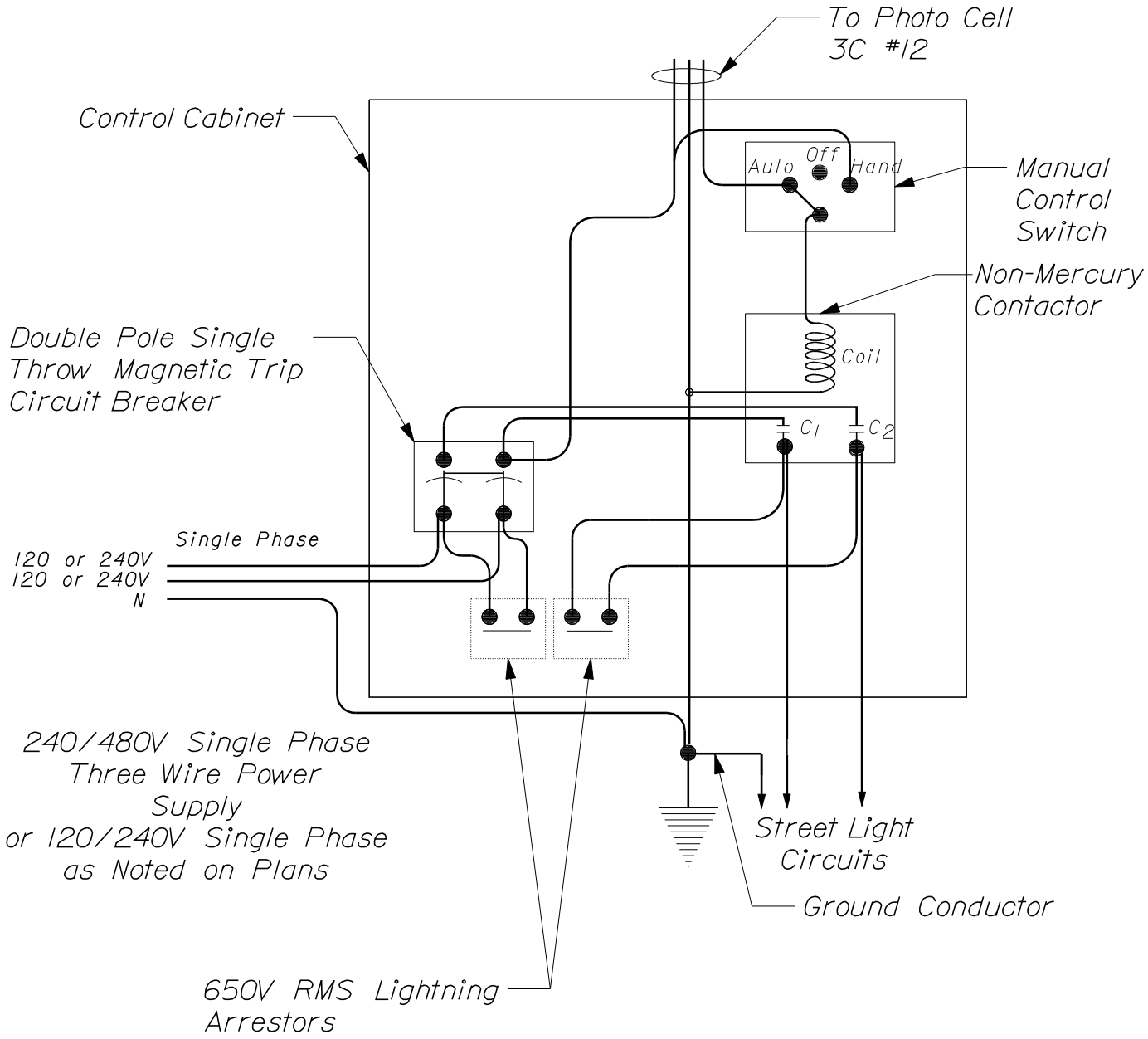

~ SCHEMATIC FOR STREET LIGHTING
CONTROL CABINET - ONE CIRCUIT ~

HIGHWAY LIGHTING
634(02)

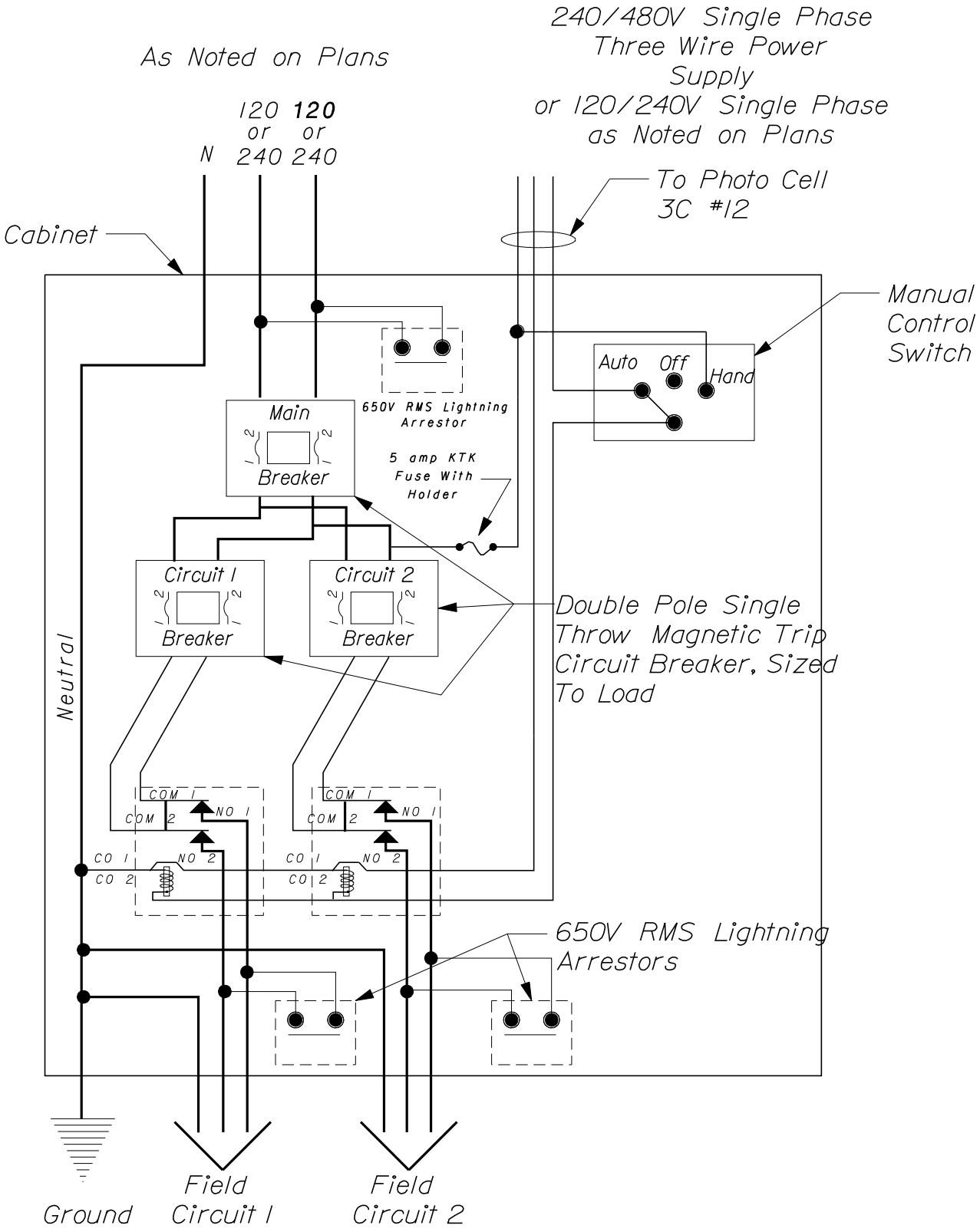

~ SCHEMATIC FOR STREET LIGHTING
CONTROL CABINET - MULTI CIRCUIT ~

HIGHWAY LIGHTING
634(03)

6" RISE / 12" TREAD (2:1 SLOPE)			
REINFORCING STEEL			
MARK	SIZE	NUMBER	LENGTH (EACH)
R	#4 0.668 lbs./ft.	(2) each parapet (1) each ft. of width	11" for "A" +13.4" for each "B" +12" for "C"
S	#4 0.668 lbs./ft.	(2) for "A" (2) for each "B" (2) for "C"	4" each parapet +12" per ft. of width

CONCRETE CLASS "A"		
SECTION	STEPS PER FT. OF WIDTH	PARAPET EACH WALL
"A" header "B" each inter. Step "C" footer	0.026 cu. yds. 0.031 cu. yds. 0.033 cu. yds.	0.013 cu. yds. 0.021 cu. yds. 0.022 cu. yds.

8" RISE / 12" TREAD (1 1/2 : 1 SLOPE)			
REINFORCING STEEL			
MARK	SIZE	NUMBER	LENGTH (EACH)
R	#4 0.668 lbs./ft.	(2) each parapet (1) each ft. of width	11" for "A" +14.5" for each "B" +12" for "C"
S	#4 0.668 lbs./ft.	(2) for "A" (2) for each "B" (2) for "C"	4" each parapet +12" per ft. of width

CONCRETE CLASS "A"		
SECTION	STEPS PER FT. OF WIDTH	PARAPET EACH WALL
"A" header "B" each inter. Step "C" footer	0.033 cu. yds. 0.036 cu. yds. 0.037 cu. yds.	0.016 cu. yds. 0.025 cu. yds. 0.026 cu. yds.

QUANTITIES FOR CONCRETE STEPS

642(01)

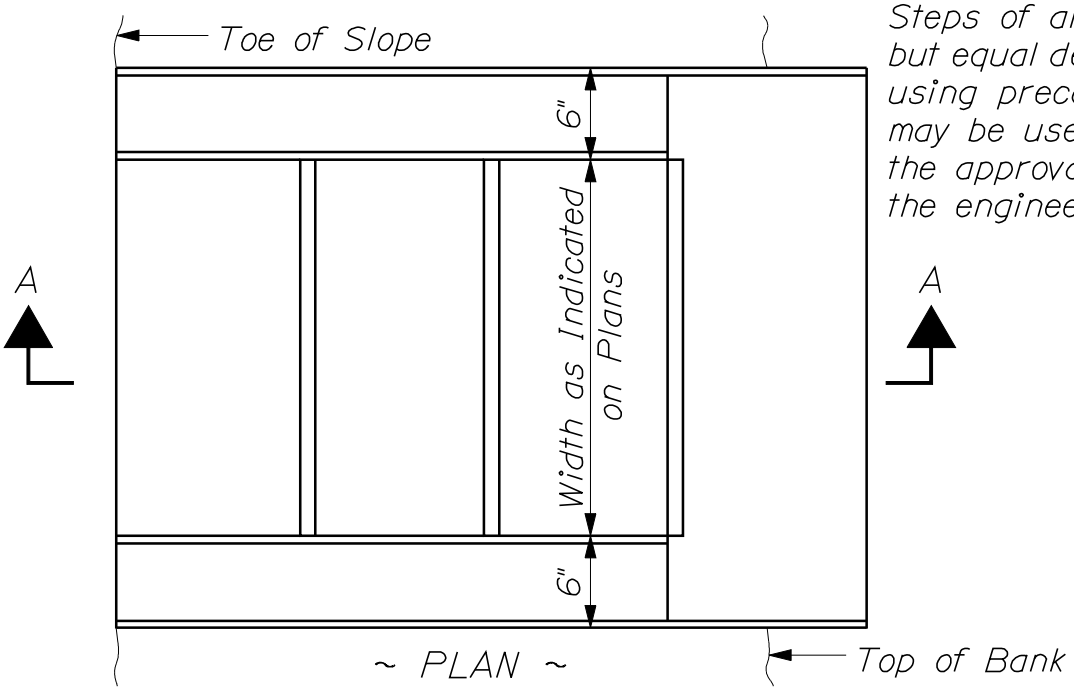

Steps of alternate but equal design, using precast parts may be used upon the approval of the engineer.

Cost of furnishing and placing reinforcing steel shall be considered included in the price per cubic yard of cast-in-place concrete steps.

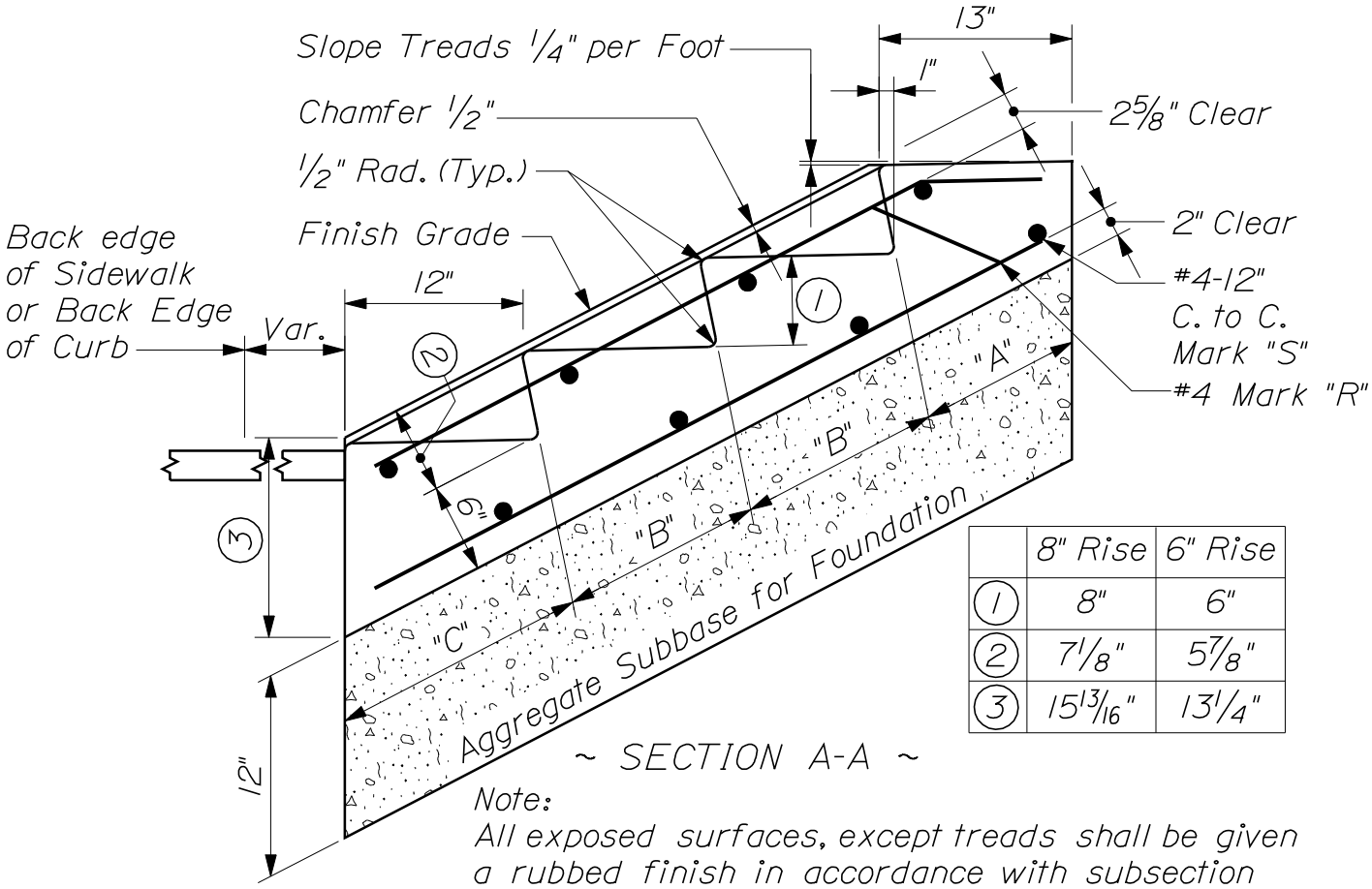

	8" Rise	6" Rise
1	8"	6"
2	7 1/8"	5 7/8"
3	15 13/16"	13 1/4"

Note:
All exposed surfaces, except treads shall be given a rubbed finish in accordance with subsection 502.14(d)2. Treads shall be given a broomed finish.

CAST IN PLACE REINFORCED CONCRETE STEPS

642(02)

~ SPANWIRE ~

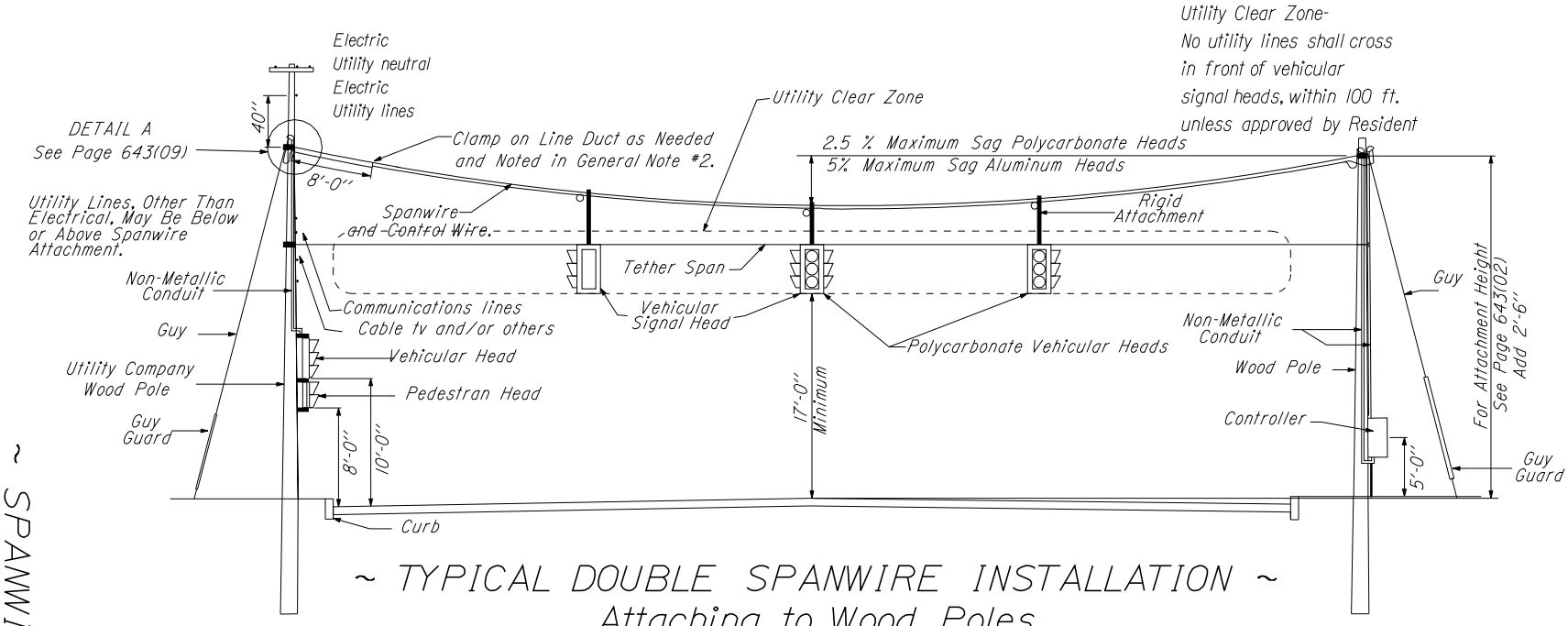

~ TYPICAL DOUBLE SPANWIRE INSTALLATION ~

Attaching to Wood Poles

(TETHER AT TOP OF SIGNAL HEADS)

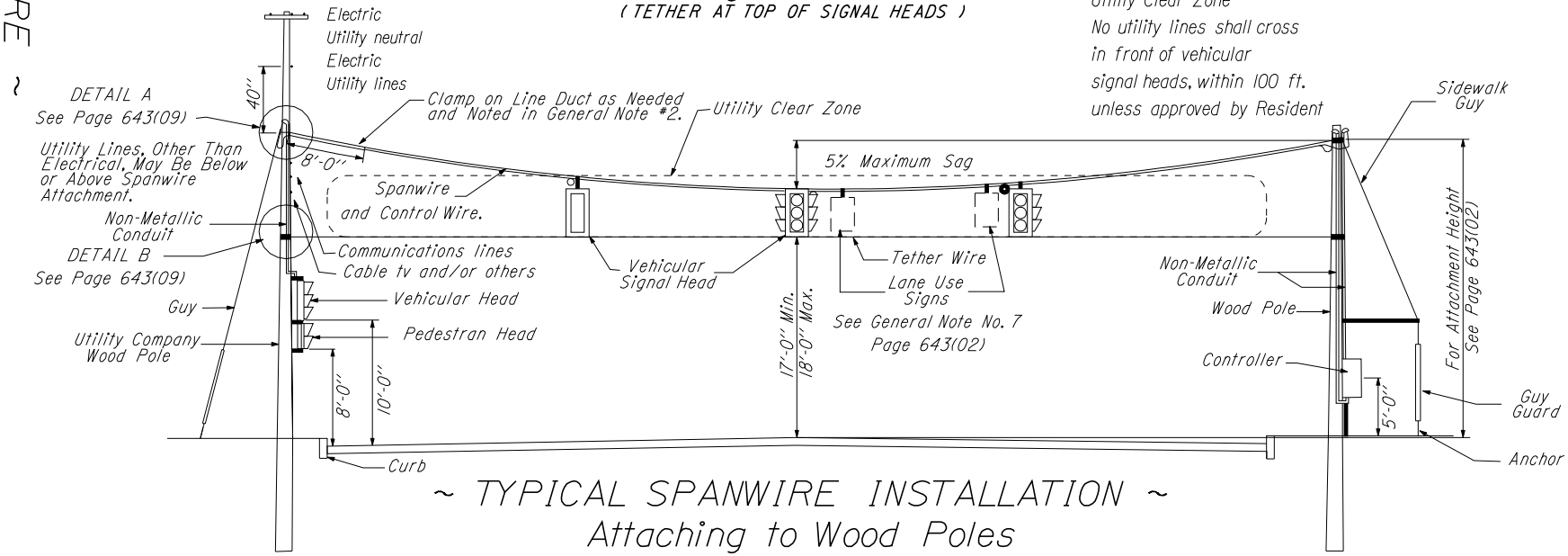

~ TYPICAL SPANWIRE INSTALLATION ~

Attaching to Wood Poles

(TETHER AT BOTTOM OF SIGNAL HEADS)

~ HEIGHT OF SPANWIRE ATTACHMENT ~

HORIZONTAL SPAN WIDTH	HEIGHT OF SPANWIRE ATTACHMENT- 5% Sag Aluminum Heads	HEIGHT OF TOP ATTACHMENT- 2.5% Sag DOUBLE SPANWIRE Polycarbonate Heads
Up to 38'	23'-0"	24'-4"
40'	23'-6"	24'-6"
45'	23'-9"	
50'	24'-0"	24'-9"
55'	24'-3"	
60'	24'-6"	25'-0"
65'	24'-9"	
70'	25'-0"	25'-3"
75'	25'-3"	
80'	25'-6"	25'-6"
85'	25'-9"	
90'	26'-0"	25'-9"
95'	26'-3"	
100'	26'-6"	26'-0"
105'	26'-9"	
110'	27'-0"	26'-3"
115'	27'-3"	
120'	27'-6"	26'-6"
125'	27'-9"	
130'	28'-0"	26'-9"
135'	28'-3"	
140'	28'-6"	27'-0"
145'	28'-9"	
150'	29'-0"	27'-3"
155'	29'-3"	
160'	29'-6"	27'-6"
165'	29'-9"	

~ GENERAL NOTES for TRAFFIC SIGNAL SPANWIRE ~

1. Height of Spanwire attachment is shown on chart above. When attaching to utility company owned poles, the Contractor shall check with respective utility companies to determine if all adjustments have been made.
2. When utility pole clearances cannot be met, the signal Spanwire shall be protected by schedule 40 line duct.
3. The utility companies shall be responsible for avoiding the Traffic Signal Clear Zone as shown below. At the Pre-construction Utility Meeting, conflicts, if any, will be resolved.
4. Conduits installed on utility company owned poles will be installed by the respective utility. The conduit will be provided by the signal Contractor.
5. Utilities will be no lower than 19 feet at mid span.
6. The location of all signal equipment and related items shall be in conformity with 'Americans with Disabilities Act' (ADA) accessibility standards. Use of sidewalks and pedestrian ramps shall not be obstructed.
7. Lane use shall be hung using "Pelco" assembly part no. SE-5111 or equal. Vehicular heads shall be hung using 'Pelco' assembly part no. SE-5024 or SE-5073, or equal.

SPANWIRE
TRAFFIC SIGNALS

643(02)

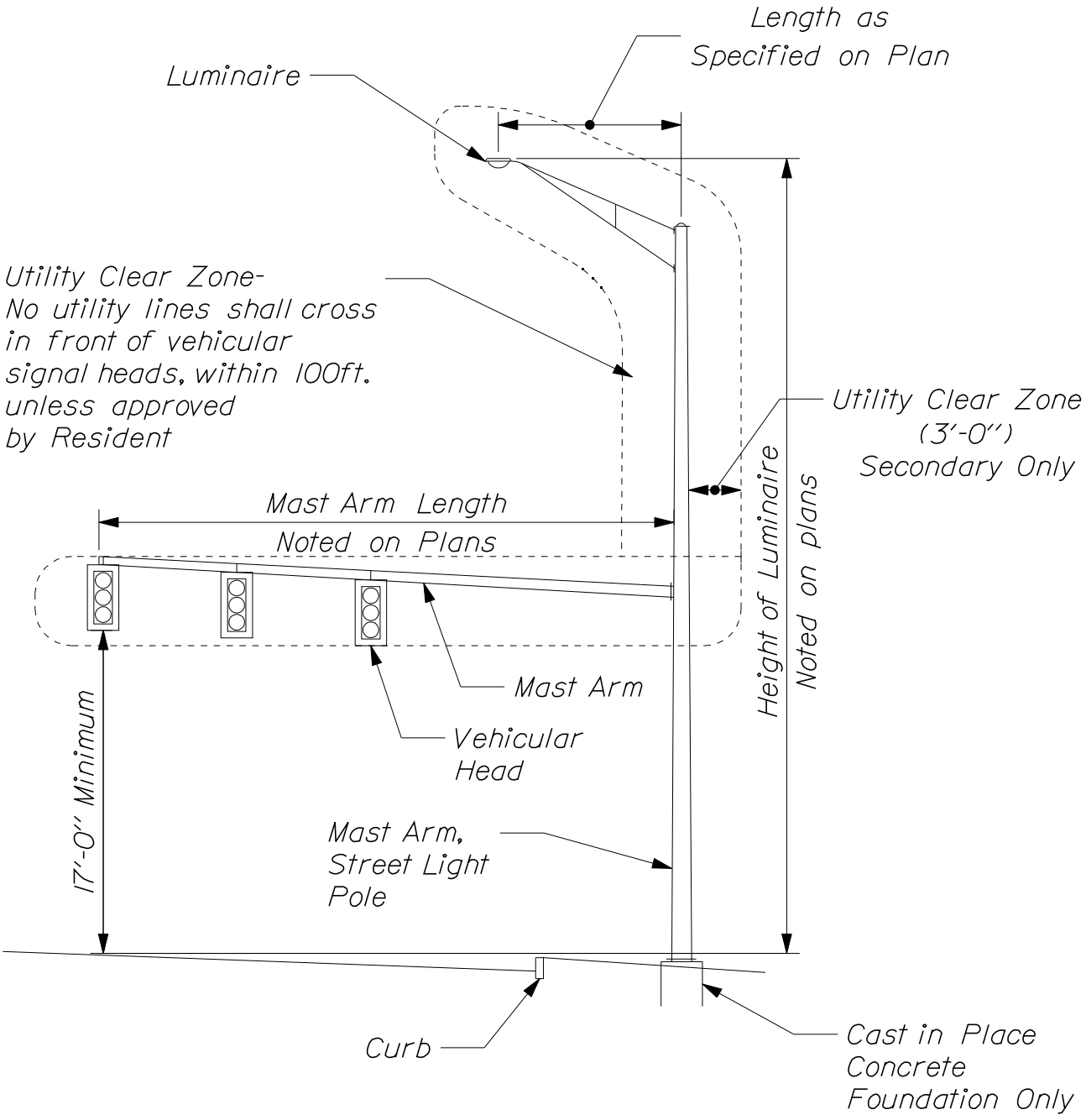

~ TYPICAL MAST ARM, STREET LIGHT INSTALLATION ~

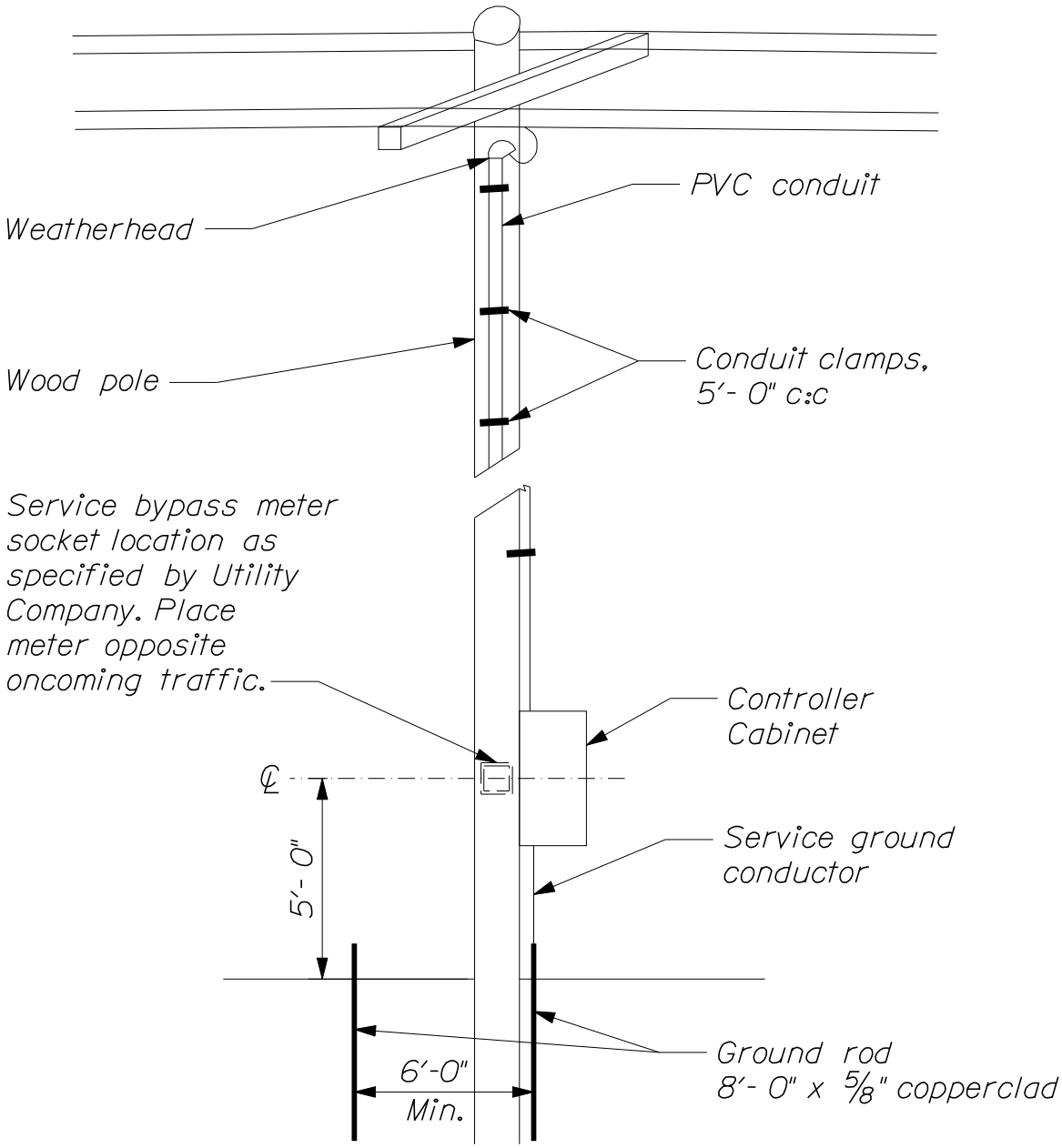

~ SERVICE CONNECTION ~

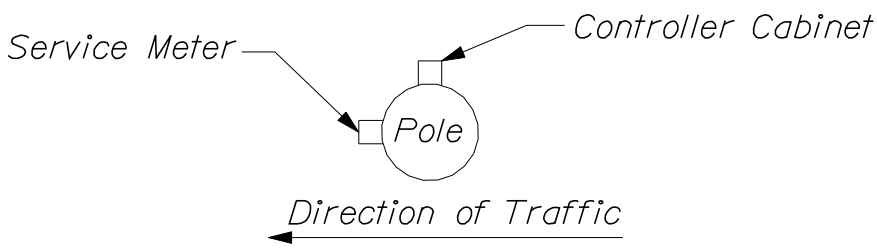

~ PLAN VIEW~

TRAFFIC SIGNALS

643(04)

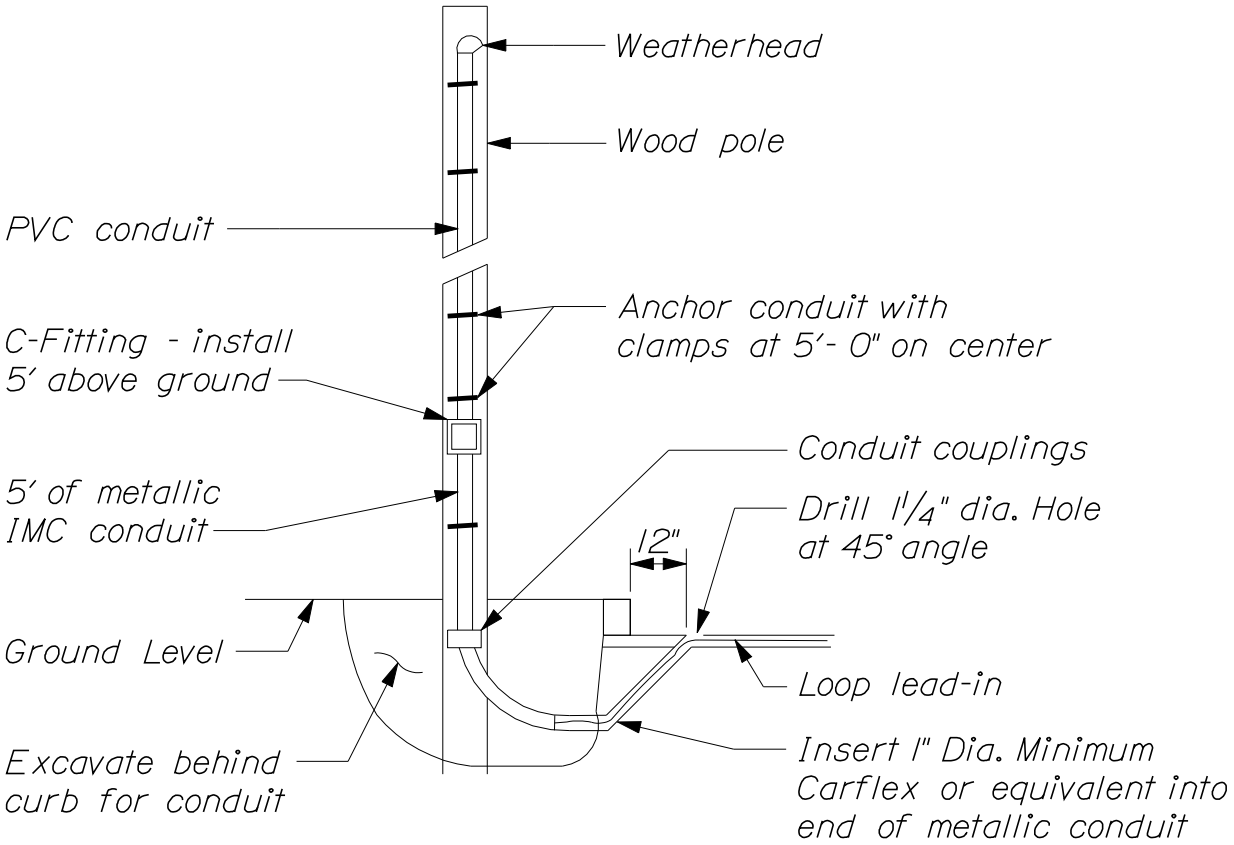

~ CURB SECTION ~

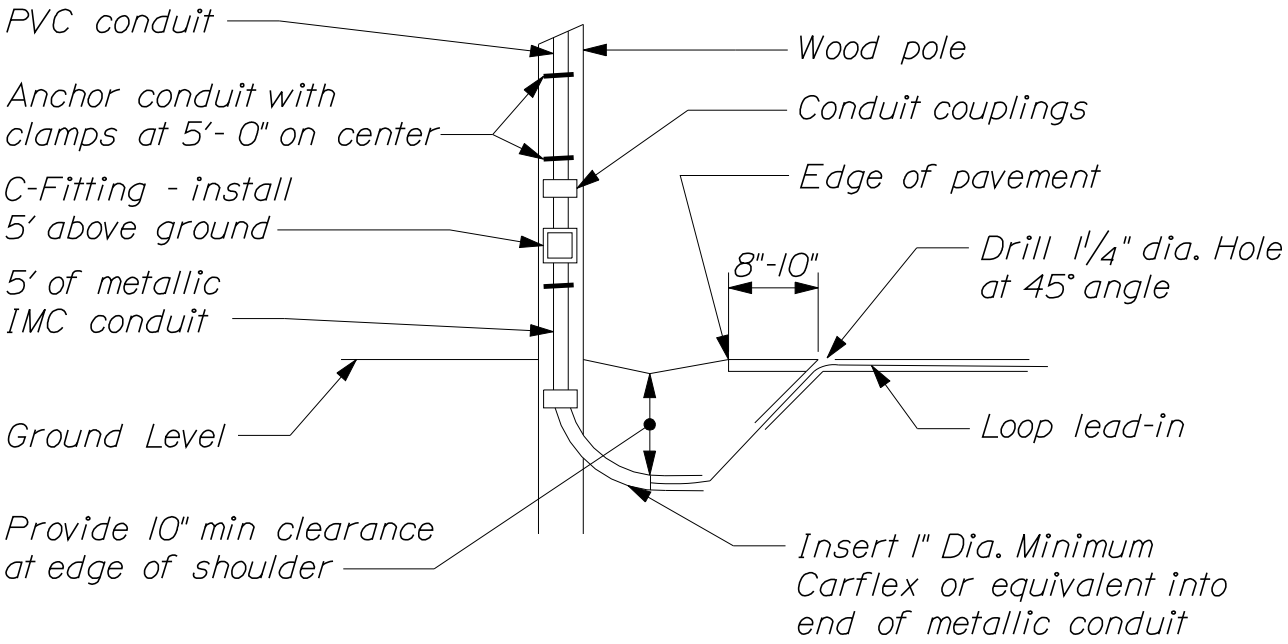

~ SHOULDER SECTION ~

~ DETECTOR LEAD-IN INSTALLATION ~

TRAFFIC SIGNALS

643(05)

NOTES:
Location and configuration of loops are subject to approval of the Resident in the field. Number of turns of wire in loops and number of loops per amplifier shall be in accordance with the manufacturer's recommendations. Loop slots shall be filled with an approved two-component epoxy embedding sealer.

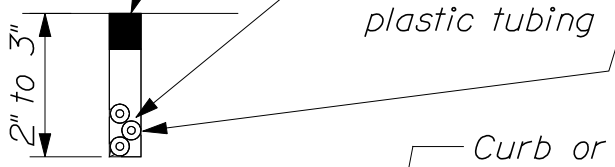

~ SECTION A-A ~

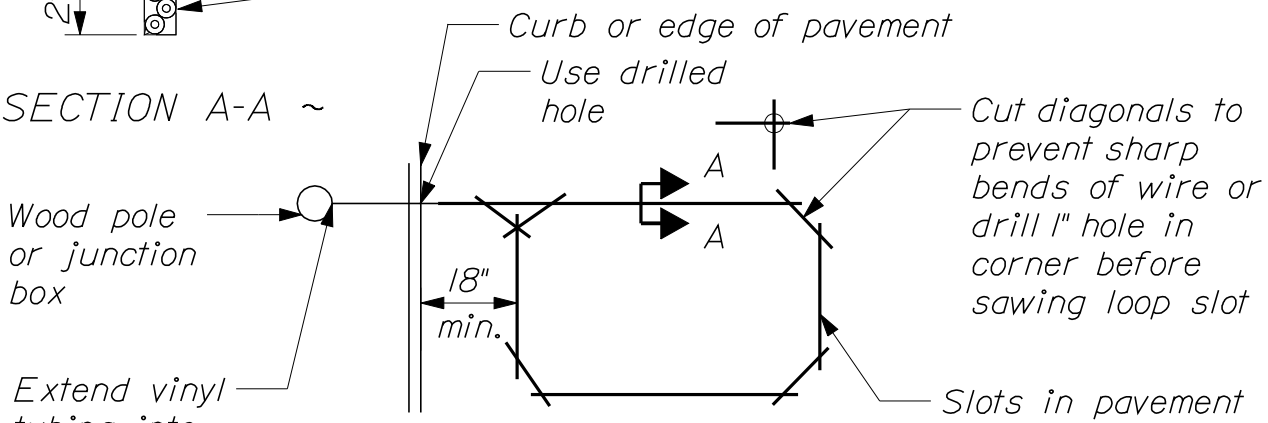

~ LOOP SLOT ~

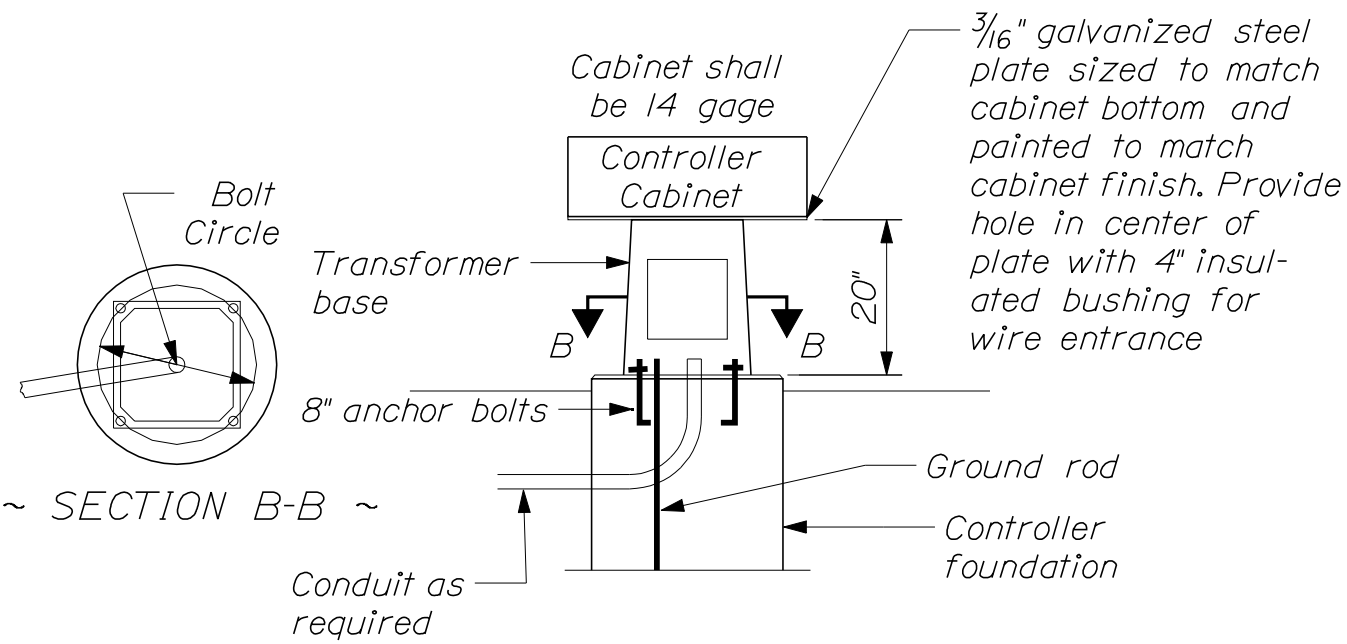

~ SECTION B-B ~

~ GROUND MOUNTED CONTROLLER ~

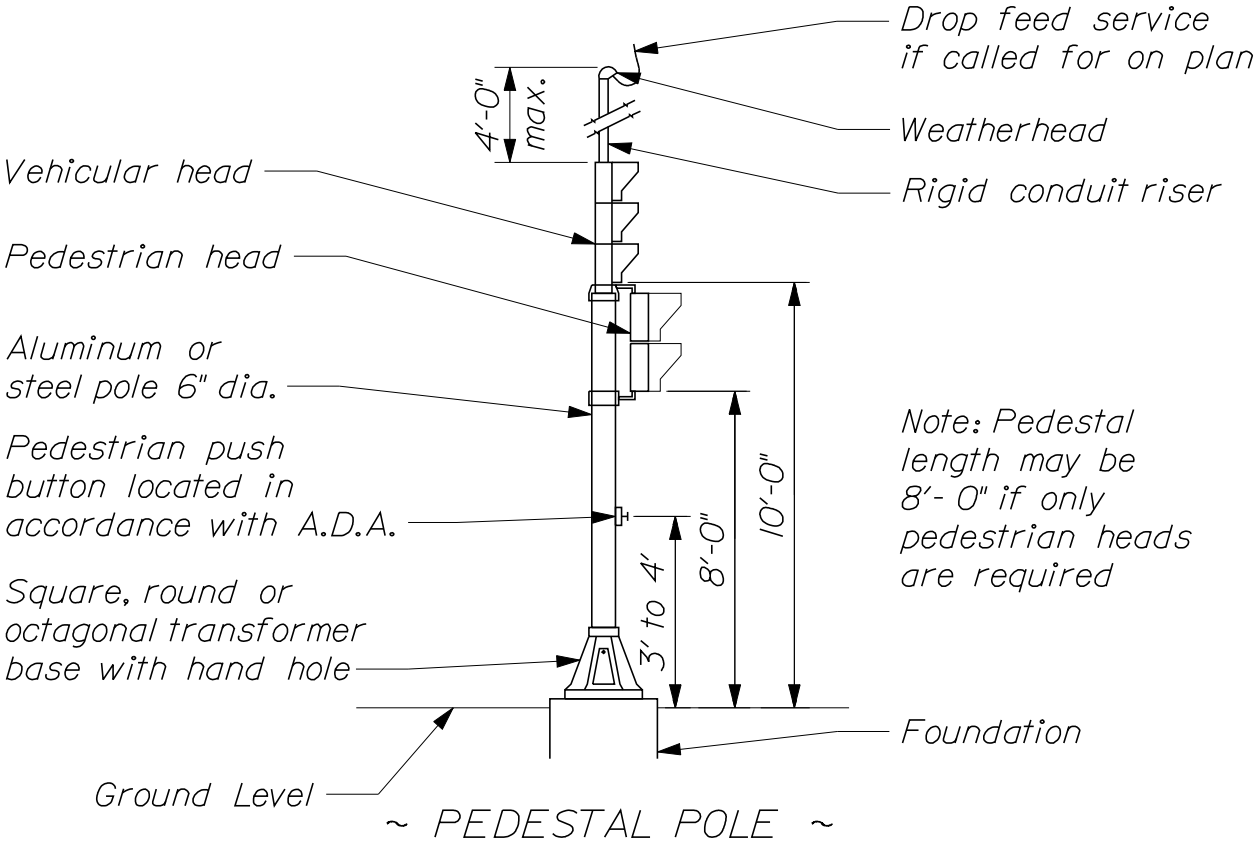

~ PEDESTAL POLE ~

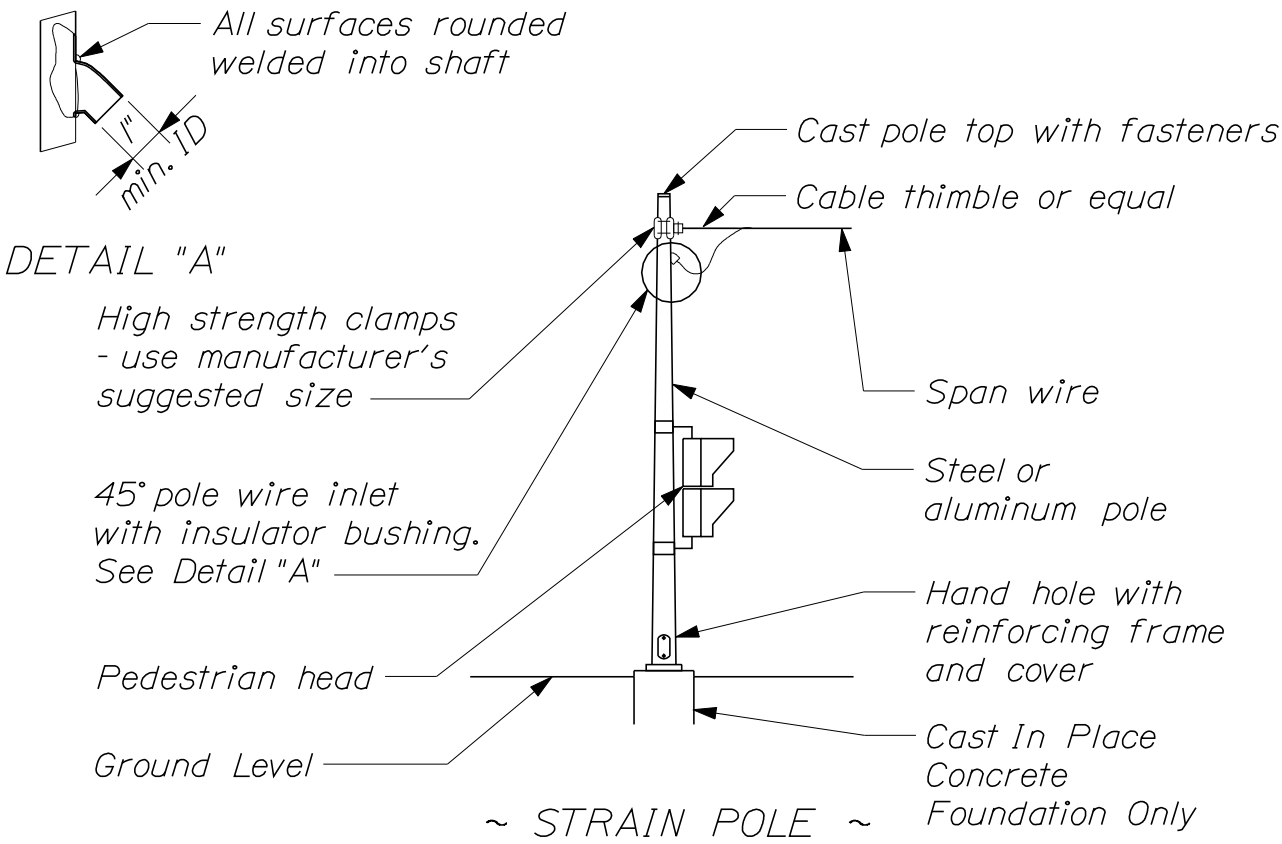

~ STRAIN POLE ~

TRAFFIC SIGNALS

643(07)

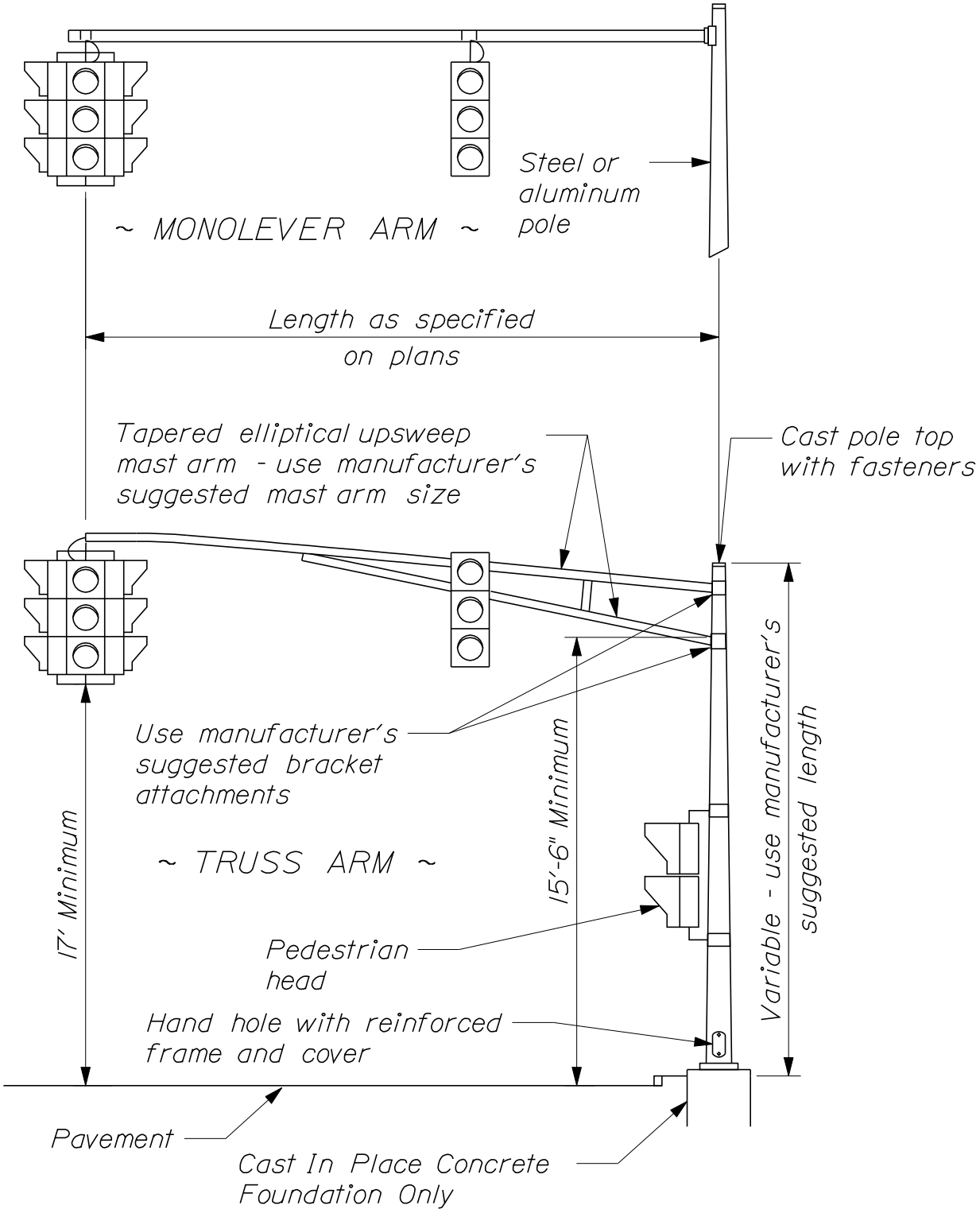

TRAFFIC SIGNALS

643(08)

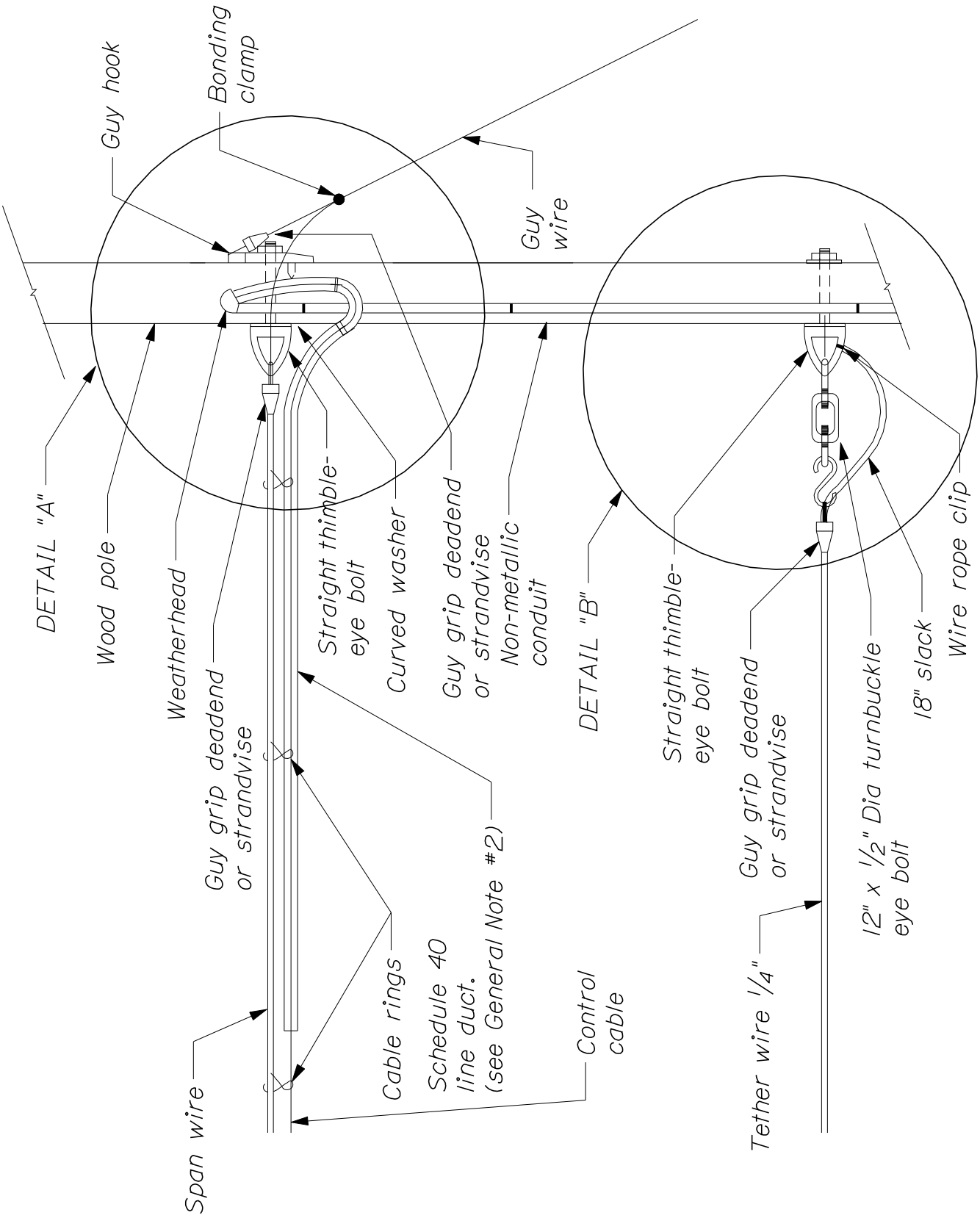

~ TYPICAL SPANWIRE INSTALLATION ~
Attaching to Wood Poles

TRAFFIC SIGNALS
643(09)

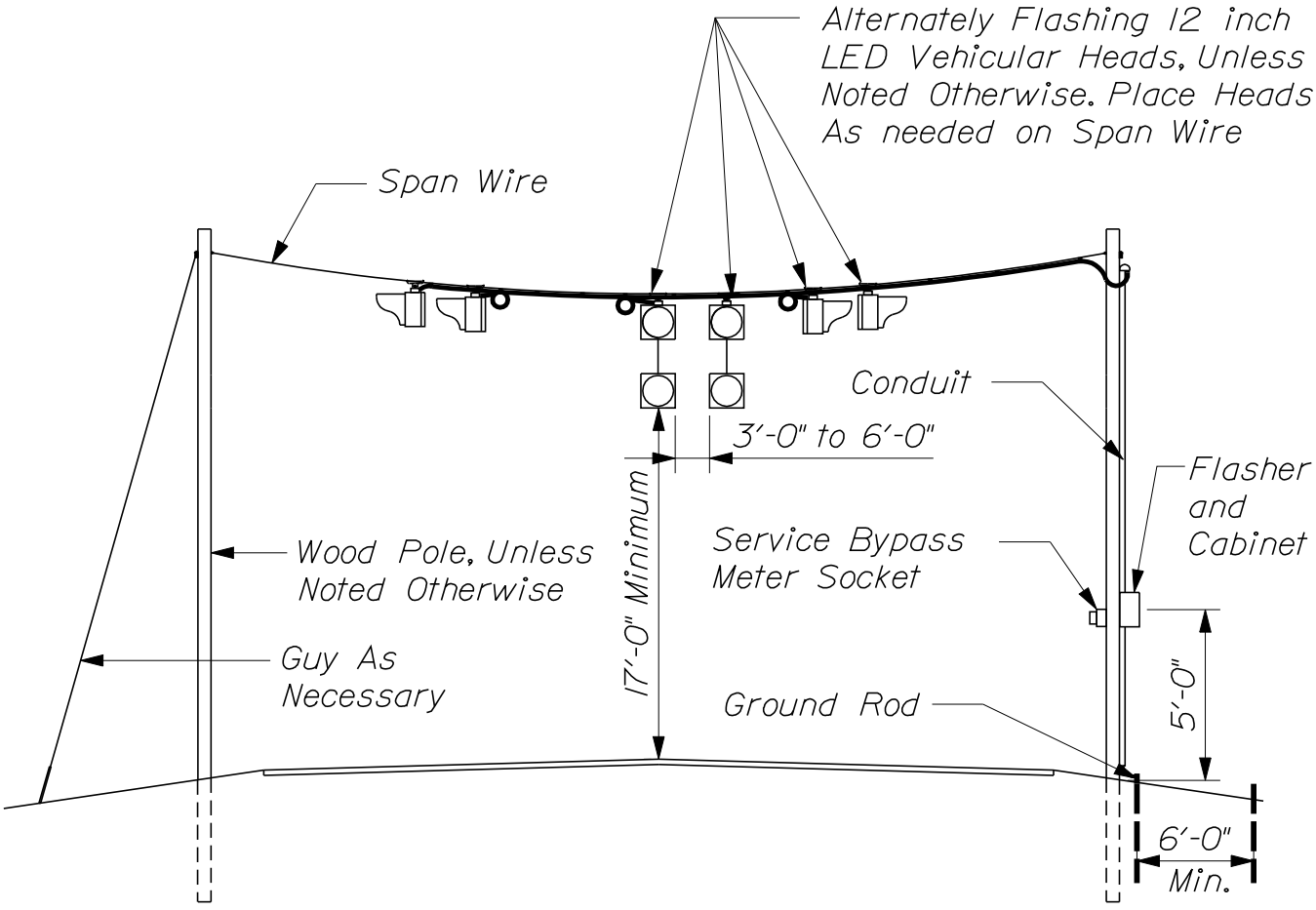

NOTE:
All work shall conform to applicable portions of The Standard Specifications and The Standard Details.

~ TYPICAL FLASHING BEACON INSTALLATION ~
ITEM NO. 643.60

TRAFFIC SIGNALS
643(10)

ATCC CABINET

643(II)

FRONT VIEW

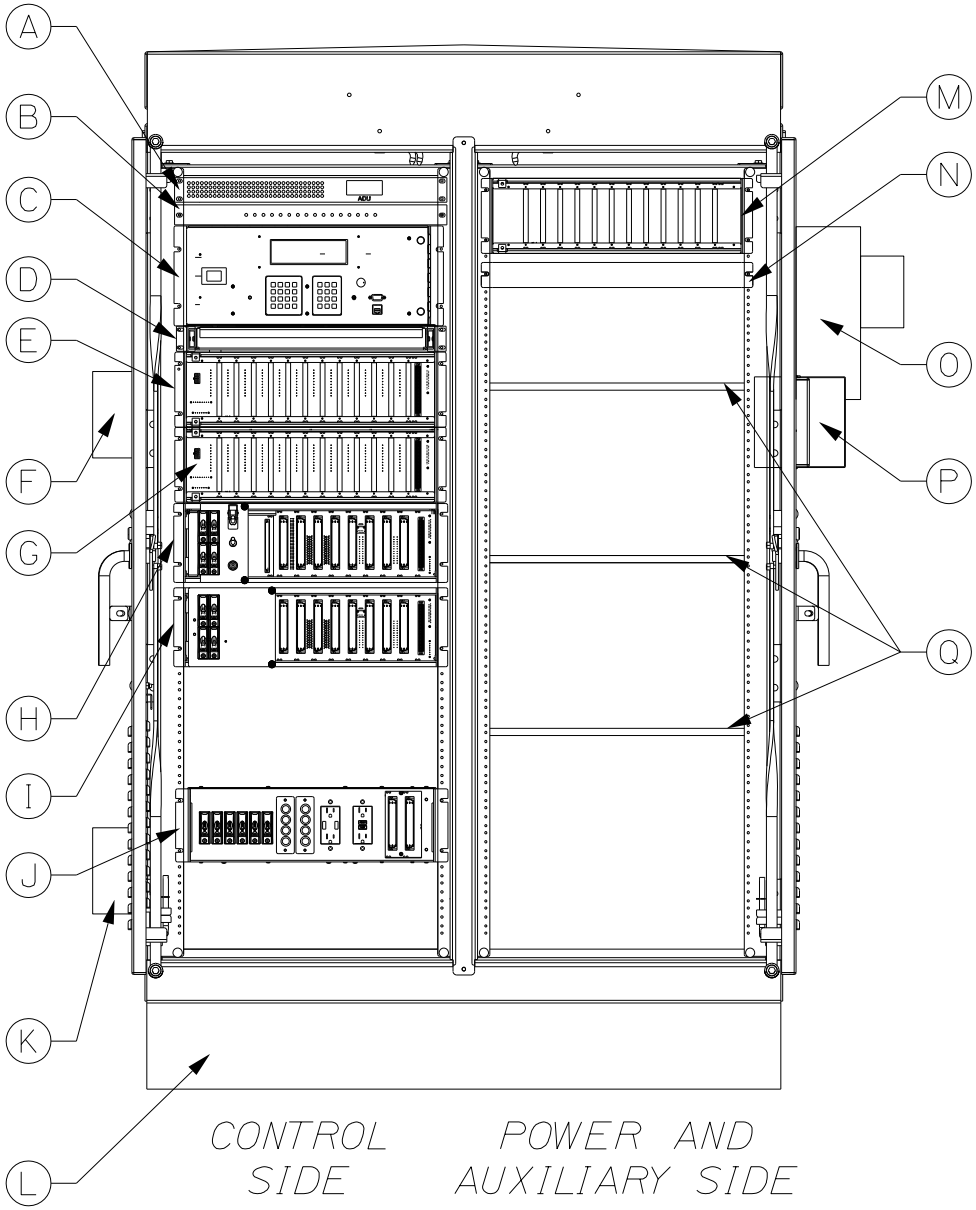

TABLE OF COMPONENTS	
CONTROL SIDE	
A	Auxiliary Display Unit
B	Detector Test Switch Panel
C	ATC Controller
D	Pull-out Drawer
E	24 Channel Input Assembly
F	GFI Outlet Access Box
G	24 Channel Input Assembly
H	Output Assembly Channels 1-16
I	Output Assembly Channels 17-32
J	Service Assembly
K	Generator Access Panel MTD to Cabinet Wall
L	6" Extender Base
POWER & AUX. SIDE	
M	Empty 19" Card Cage
N	Cell Modem Interface Unit
O	Electric Service Meter Socket/ Electrical Service Disconnect
P	Police Door MTD to Front Door
Q	Shelves

ATCC CABINET

643(12)

BACK VIEW

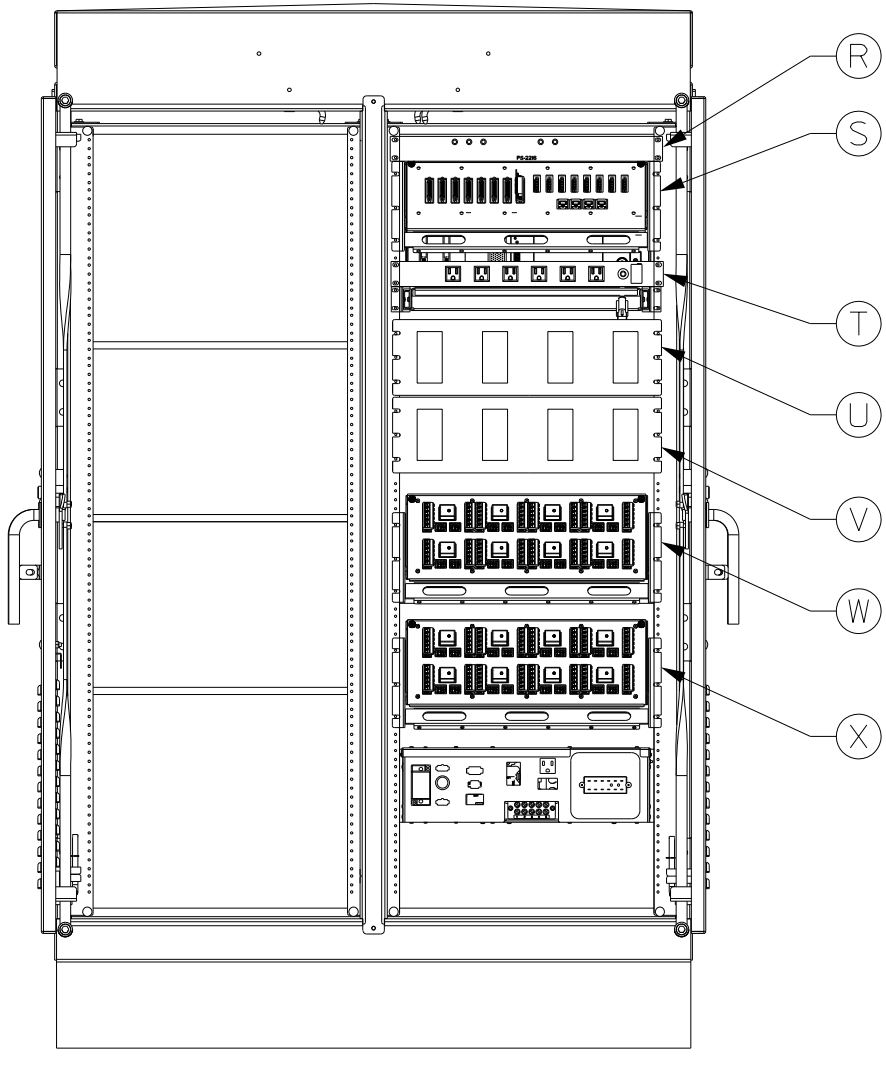

POWER AND AUXILIARY SIDE

CONTROL SIDE

TABLE OF COMPONENTS	
CONTROL SIDE	
R	Cabinet Power Supply
S	DC Power/Serial Communication Bus
T	AC Power Strip
U	Input Termination Panel (Video) Channels 1-24
V	Input Termination Panel (Video) Channels 25-48
W	Field Output Panel Channels 1-16
X	Field Output Panel Channels 17-32

NOTES:

1. Drawing shown is a schematic representation of the ATC cabinet depicting the relative location of various in-cabinet devices and subassemblies. The exact size of various elements may vary per manufacturer.

2. Input termination panel shown is for video based inputs.

3. Drawing depicts two input panels and two output panels. This quantity may be reduced depending on application; see special provisions for number of panels to be supplied.

4. Fan and thermostat shall be installed on cabinet frame above the door.

5. Led light strips shall be installed on cabinet frame above the door and on the underside of the lower shelf.

6. The size of the meter socket will vary based on the local electric utility company requirement.

7. The meter shall be installed such that the bottom of the meter is at least 48 inches above final grade.

8. The load side cable shall be routed through the interior of the cabinet such that it does not block or enter into available rack space. (Removed: thus preventing that space from being used either by equipment supplied as part of the project, or future equipment that would be installed in the rack system.) The cable shall be routed between the edge of the rack system and the cabinet side wall, along the bottom of the cabinet and below the bottom opening of the doors.

ATCC CABINET

643(13)

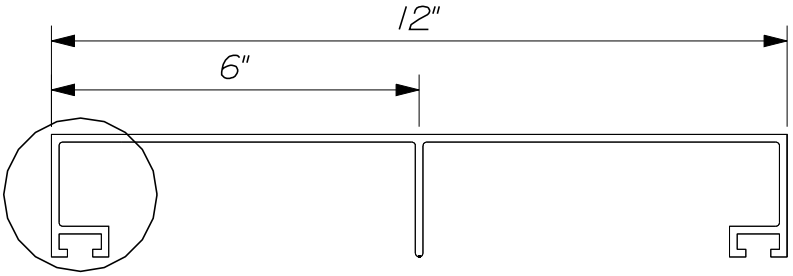

Detail A

~ 12" EXTRUDED ALUMINUM PLANK ~

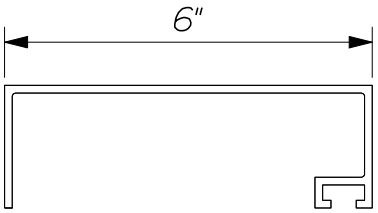

~ 6" EXTRUDED ALUMINUM PLANK ~

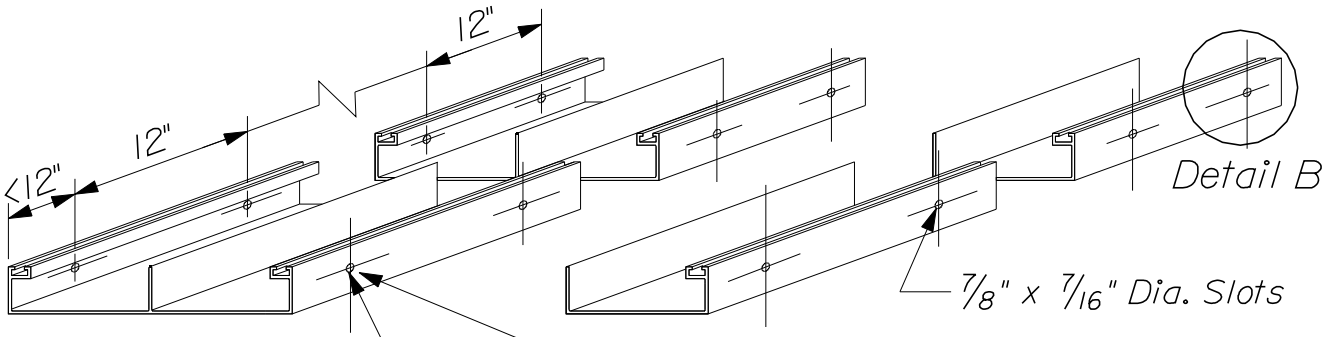

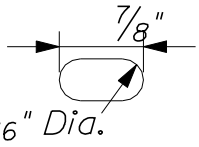

~ DETAIL - B ~

~ BOLT HOLE PUNCHING PLAN FOR EXTRUDED ALUMINUM PLANKS ~

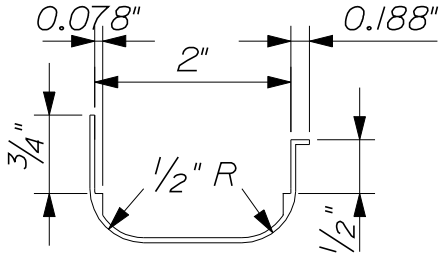

~ SIDE TRIM MOLDING ~

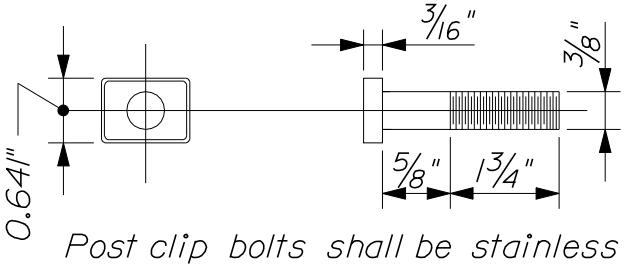

Post clip bolts shall be stainless steel on all overhead signs

~ POST CLIP BOLT ~

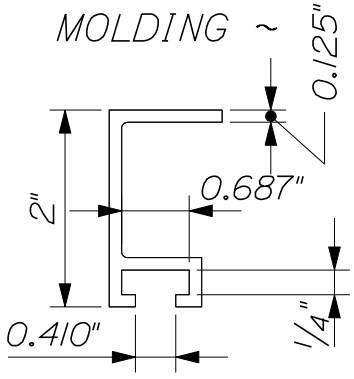

~ DETAIL - A ~

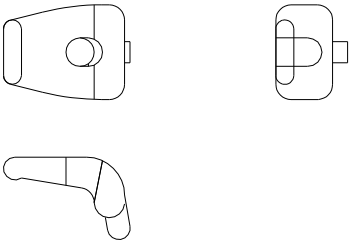

~ POST CLIP ~

ITEM NO. 645.251

TYPE I SIGNS
HIGHWAY SIGNING

645(01)

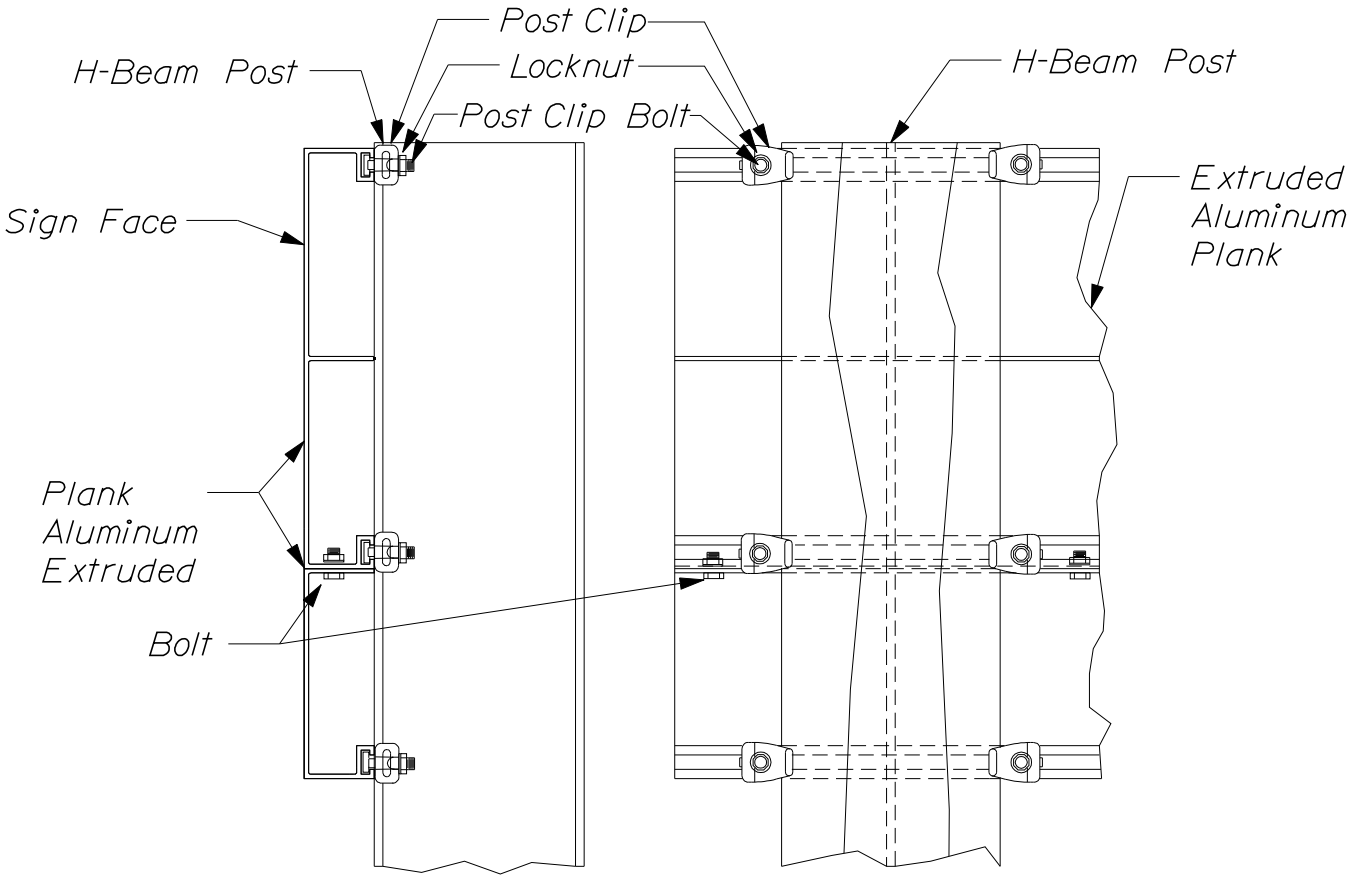

SIDE BACK

~ ATTACHMENT OF EXTRUDED ALUMINUM PLANKS TO H-BEAM POSTS ~

ITEM NO. 645.251

TYPE I SIGNS
HIGHWAY SIGNING

645(02)

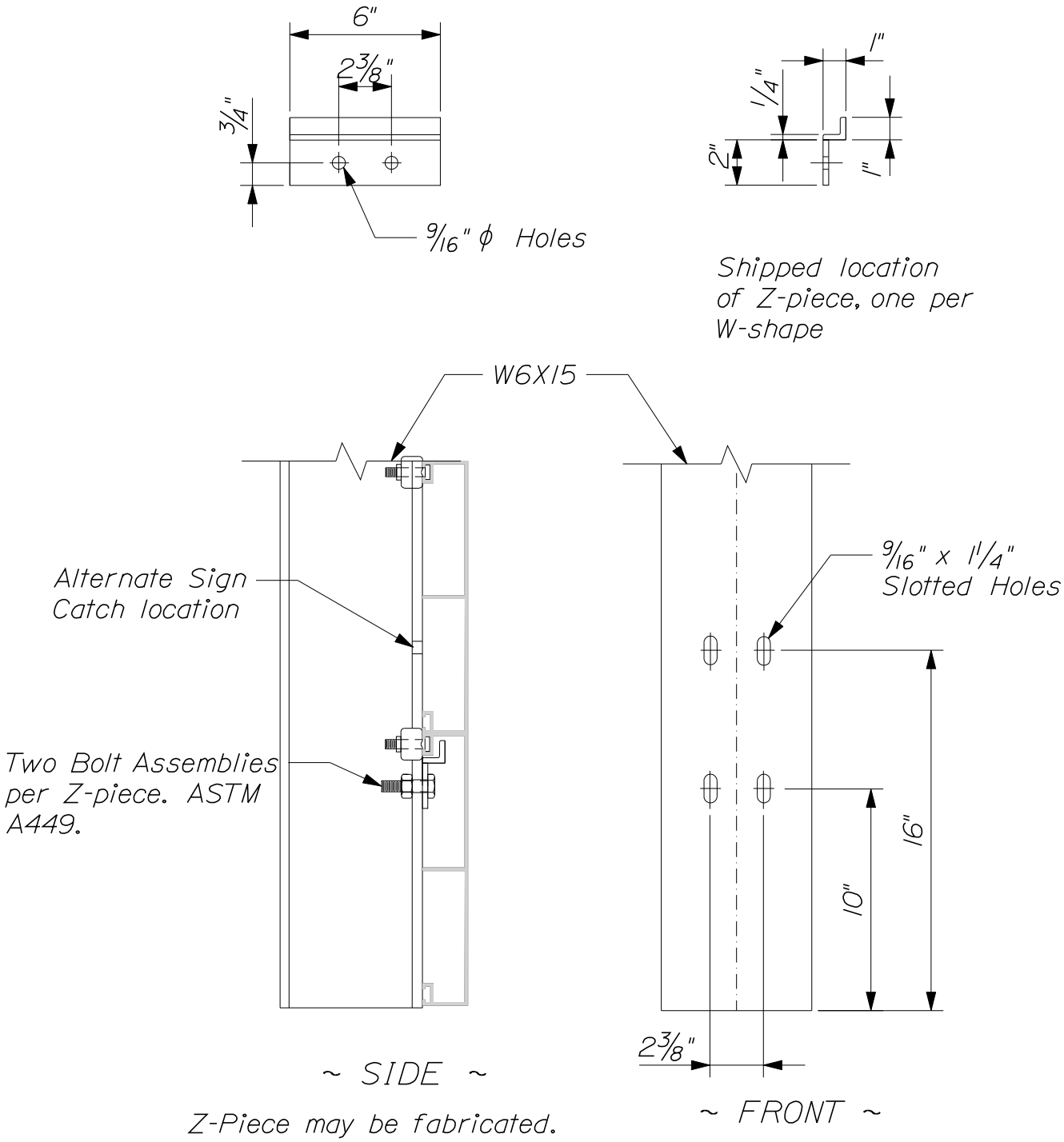

~ SIGN CHECK ~

INSTALL ON ALL OVERHEAD SIGNS

ATTACHMENT OF EXTRUDED ALUMINUM PLANKS TO OVERHEAD, CANTILEVER AND OVERPASS SIGN SUPPORT STRUCTURES

A Portion ITEM NUMBERS. 645.12, 645.13, 645.15

HIGHWAY SIGNING

645(03)

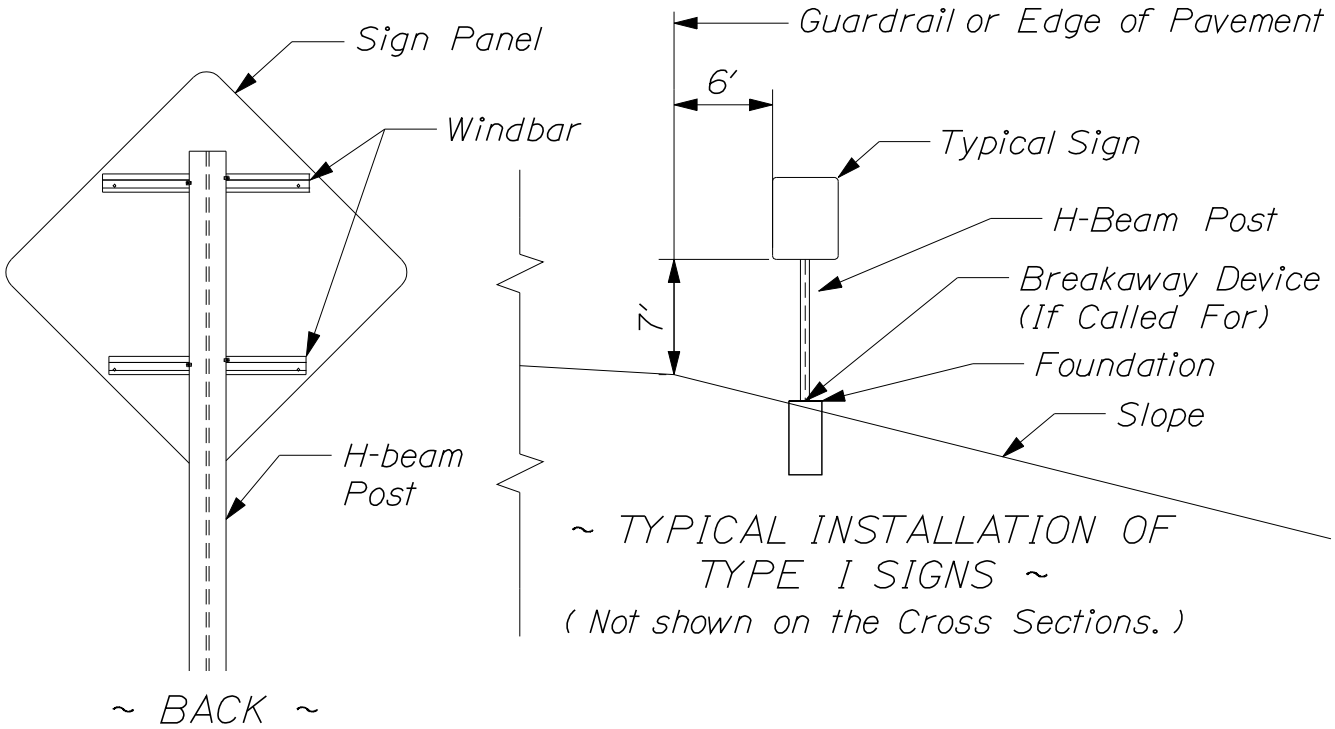

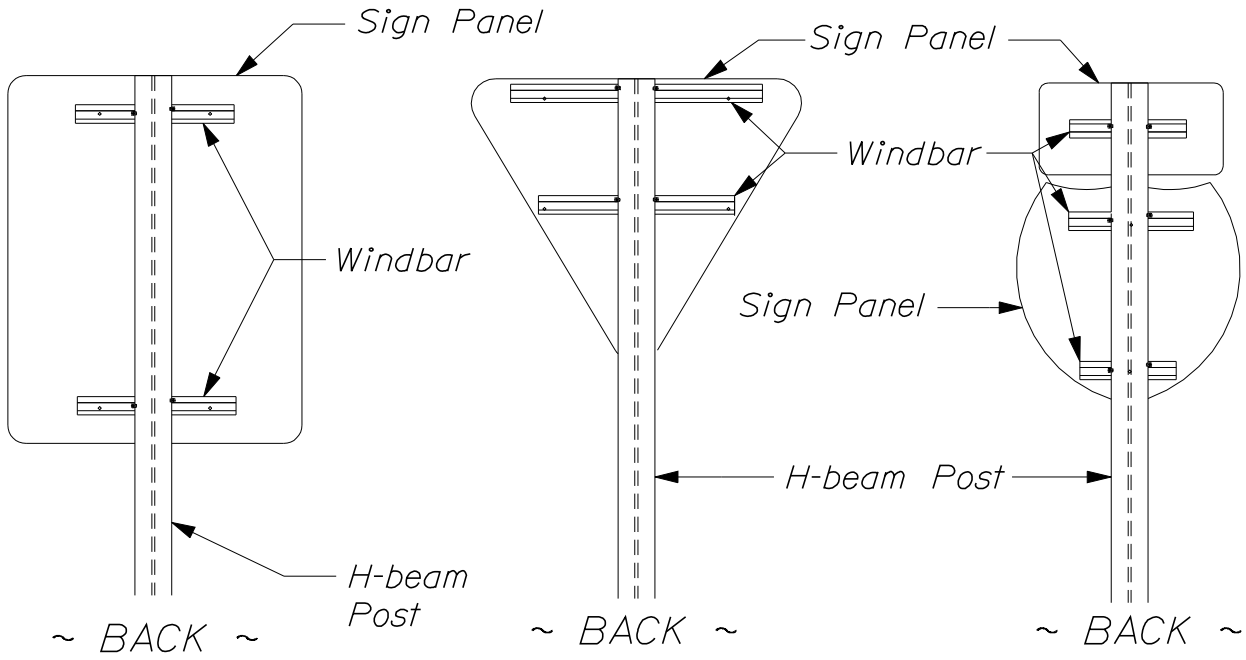

NOTE:
Bolt holes in sign panels shall be located as shown in "Standard Highway Signs".

ATTACHMENT OF SIGNS, REGULATORY, WARNING, AND ROUTE MARKER ASSEMBLY SIGNS, TYPE I TO H-BEAM POSTS

ITEM NO. 645.271

HIGHWAY SIGNING

645(04)

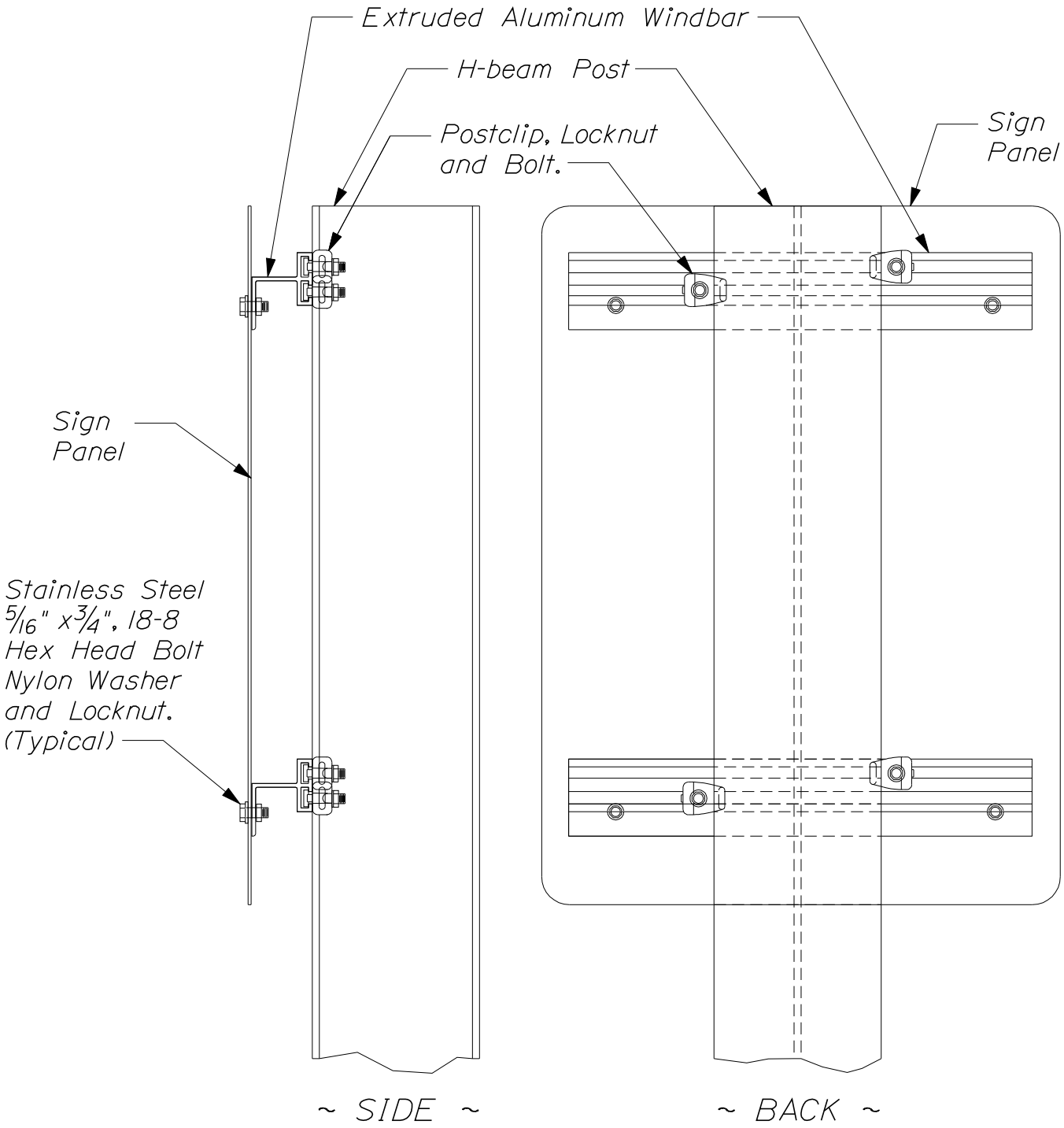

ATTACHMENT OF SIGNS, REGULATORY, WARNING, AND ROUTE MARKER ASSEMBLY SIGNS, TYPE 1 TO H-BEAM POSTS

ITEM NO. 645.271

HIGHWAY SIGNING

645(05)

STANDARD H-BEAM POSTS for TYPE I SIGNS

SINGLE SUPPORT SIGNS								
Foundation Size	Sign Area (A)	Sign Width (W)	Post Size	Base Plate Size (2), (3)	Material	Anchor Bolts (1)	Bolt Circle	Maximum Mounting Height
N/A	0 - 10 ft^2	Use Wood Posts	See Note #8	N/A	A36	N/A	N/A	12 Ft to Center of Sign
1'-6"	10 < A ≤ 16 ft^2	W = 4'- 0" Max. But includes 5'- 0" Yield Sign	W6x9	12"x12"x1" 41 LB		1" DIA x 3' - 0"	12"	
1'-6"	16 < A ≤ 25 ft^2	W = 5'- 0" Max.	W6x15	12"x12"x1" 41 LB		1" DIA x 3' - 0"	12"	
2'-0"	25 < A ≤ 42 ft^2	W = 7'- 0" Max.	W8x24	14'x14"x1" 55 LB		1 1/4"DIA x 3' - 6"	14"	
MULTIPLE SUPPORT SIGNS								
2'-0"	To 60 ft^2/Post	Varible	W8x18	14'x14"x1" 55 LB	A36	1 1/4"DIA x 3' - 6"	14"	20 Ft to Center of Sign
2'-0"	60 - 85 ft^2/Post		W10x22	12"x17"x1 1/4" 72LB		1 1/4"DIA x 3' - 6"	15"	
2'-6"	85 - 110 ft^2/Post		W12x26	13'"x19"x1 1/4" 87 LB		1 1/2" DIA x 4'- 0"	15"	
2'-6"	110 - 135 ft^2/Post		W14x30	14"x21"x1 1/4" 104 LB		1 1/2" DIA x 4'- 0"	19"	

~ ANCHOR BOLT LAYOUT ~

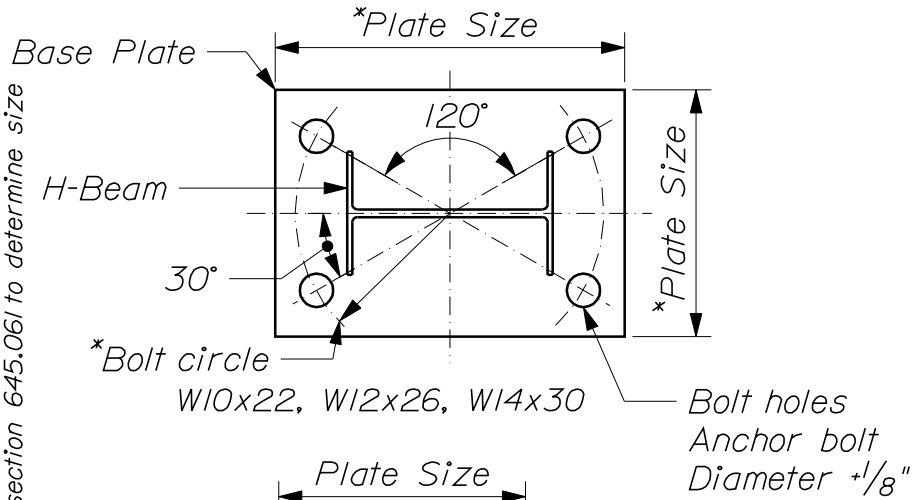

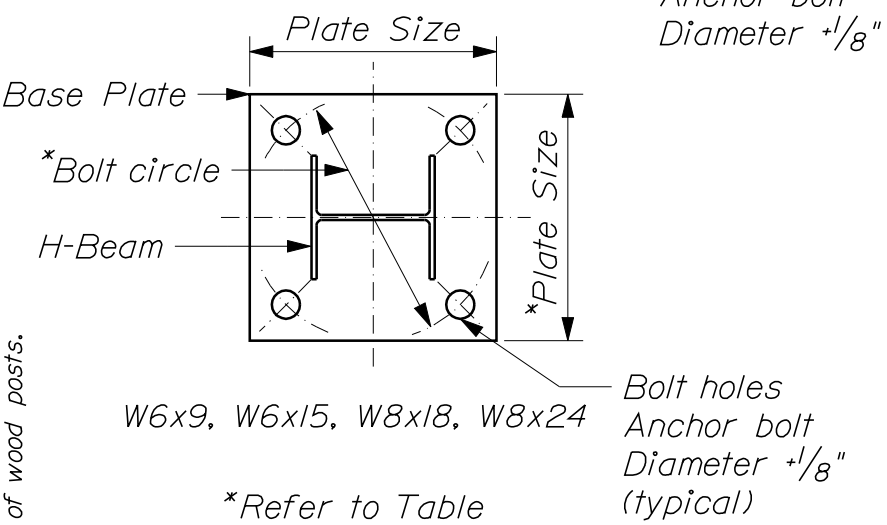

*Refer to Table

NOTES:
1. Bolts to be 50,000 PSI minimum yield strength.
2. Post to base plate weld shall be 5/16" fillet weld.
3. Base plates and H-Beams shall be hot dipped galvanized after fabrication in accordance with section 720.06.
4. Payment for the weight of base plate shall be incidental to Item No. 645.289.
5. Posts to be equipped with breakaway devices shall have holes drilled or punched before galvanizing. Posts equipped with breakaway devices shall have the post size die stamped, before galvanizing, near the bottom end of beam.
6. W - Shapes utilized with Breakaway Devices shall be in strict conformance with ASTM A6, Table 16, A, Depth.
7. Anchors for use with breakaway devices shall be set for the deepest potential W-Shape, depth +1/8". Gaps between the post (W-Shape) and the breakaway device shall be filled with galvanized shims that have the same area and hole pattern as the breakaway device. The maximum difference between the breakaway device opening and beam depth, including shims, is 1/16". Shims will be incidental to the breakaway device.
8. Refer to Standard Specification section 645.061 to determine size of wood posts.

H-BEAM POSTS
HIGHWAY SIGNING

645(06)

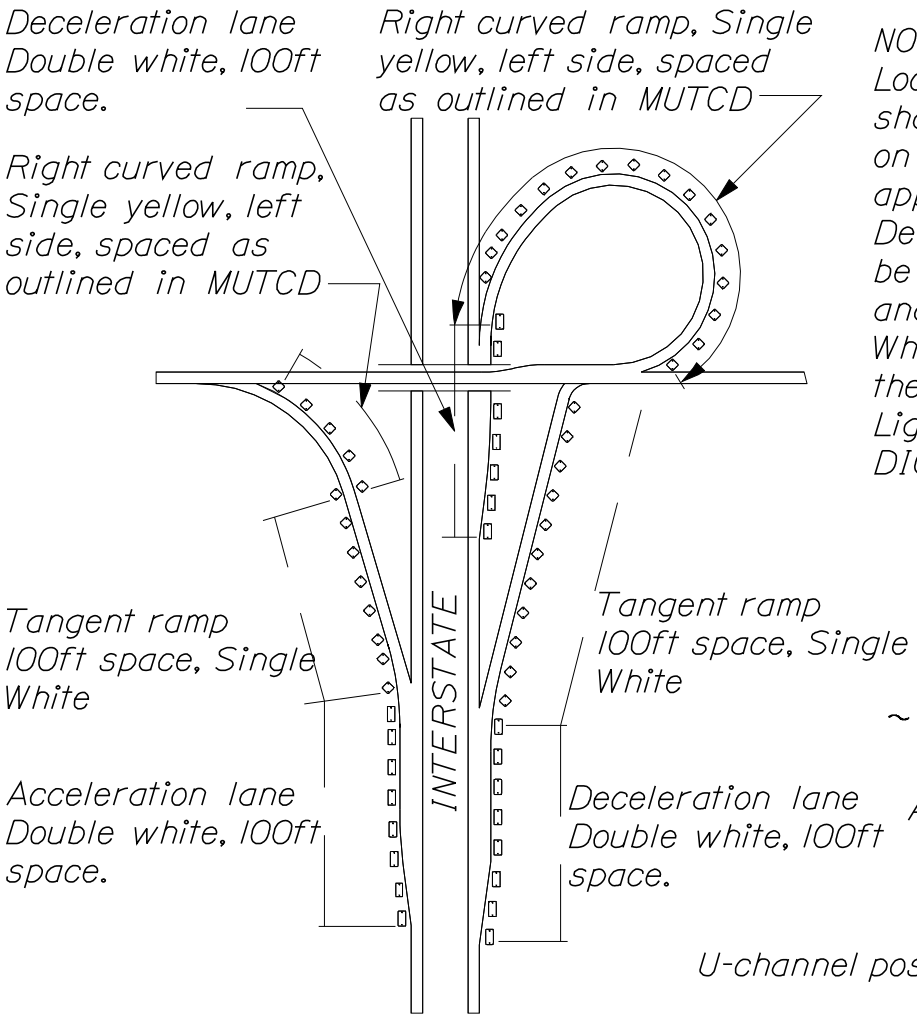

NOTE:
Locations of Delineators shall be 528 ft, 10/mile on mainline, subject to approval of the Resident. Delineators on ramps shall be placed as shown here and in the MUTCD.
When placing delineators in the area of any Highway Lighting, follow normal DIGSAFE procedures.

~ TYPICAL PLACEMENT OF DELINEATORS AT INTERCHANGES ~

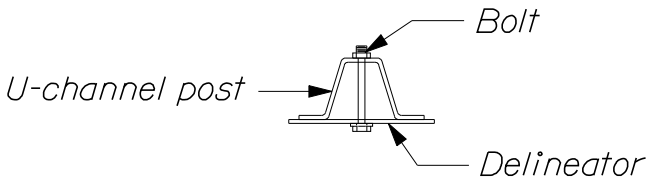

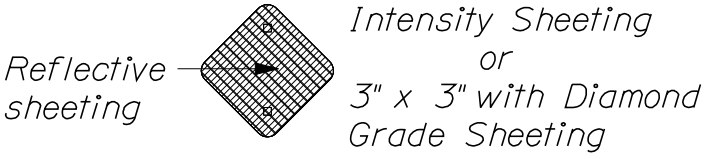

~ SINGLE DELINEATOR ~

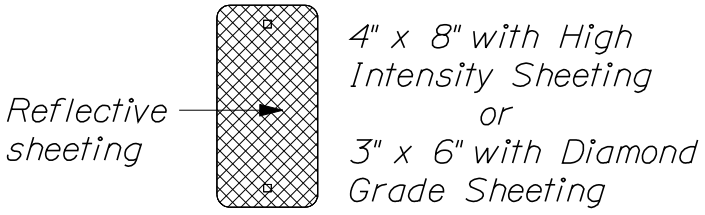

~ DOUBLE DELINEATOR ~

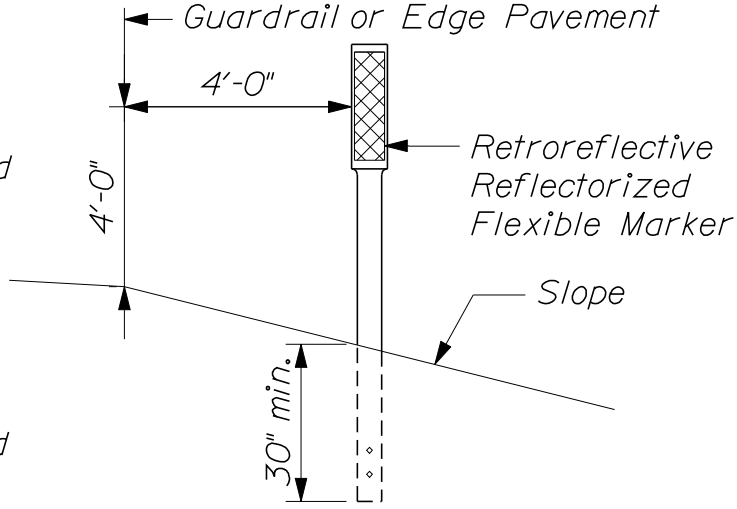

~ DELINEATORS ~

# DELINEATORS
# HIGHWAY SIGNING
645(07)

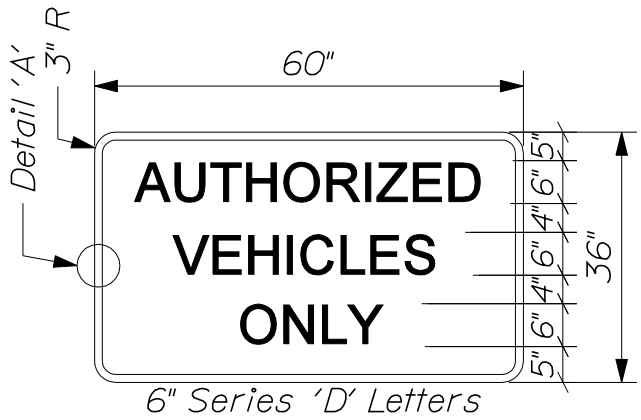

White Background
Black Letters and
Legend

AVO

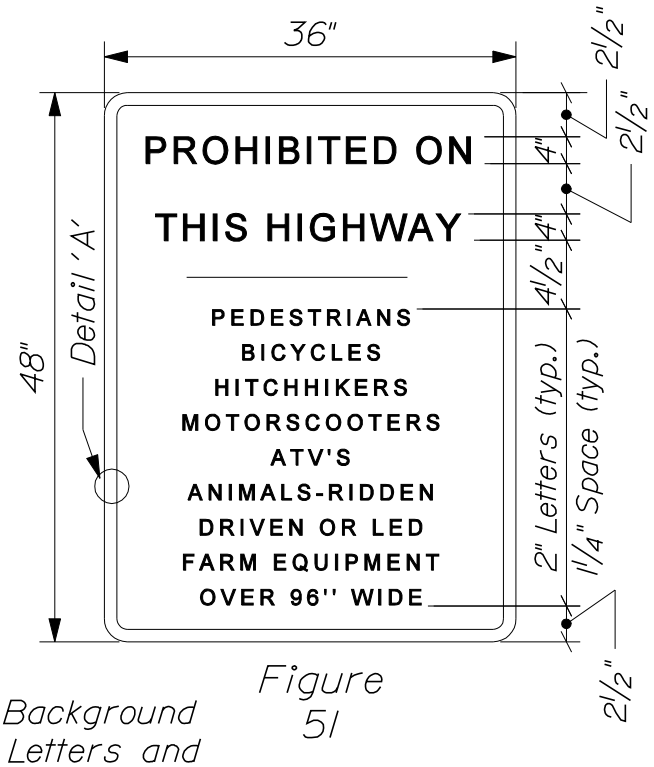

Figure
51

White Background
Black Letters and
Legend

Borders

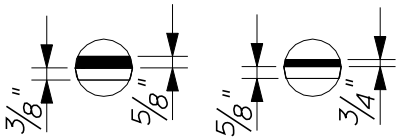

Detail B Detail A

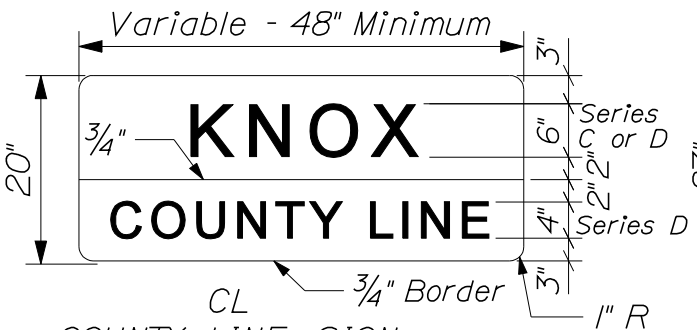

CL
COUNTY LINE SIGN

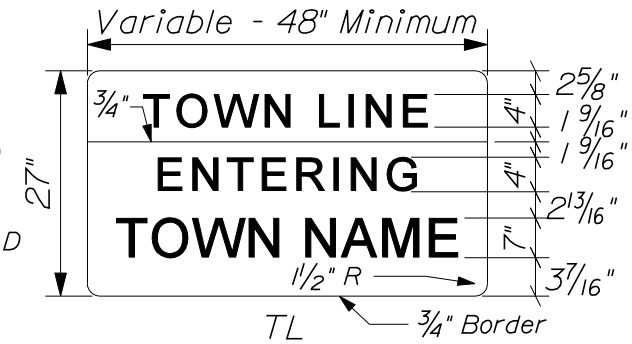

TL
TOWNLINE SIGN

Green Background
White Border and
Legend

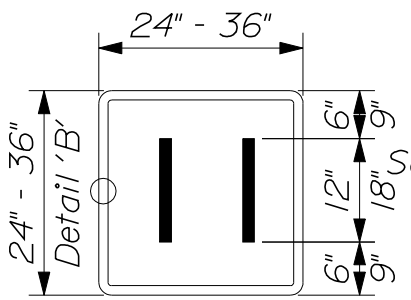

Series 'D'

MI-5

Use Symbols for
24" Shields
Blue Background
White Legend,
Border, Symbols

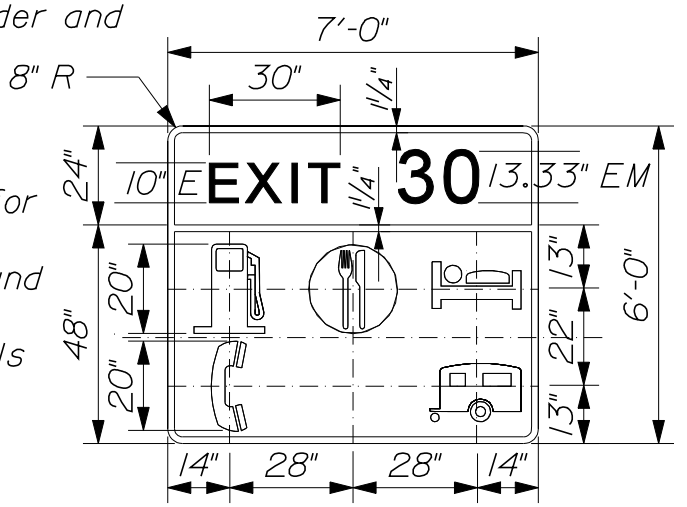

Services Sign
For Interstate

24" X 30" For 3 Digit Rte Number
36" X 45" For 3 Digit Rte Number
When Using MI-5 on Guide Signs
Omit the Border. White Background,
Black Legend and Border.

STATE OF MAINE SIGNS
HIGHWAY SIGNING

645(08)

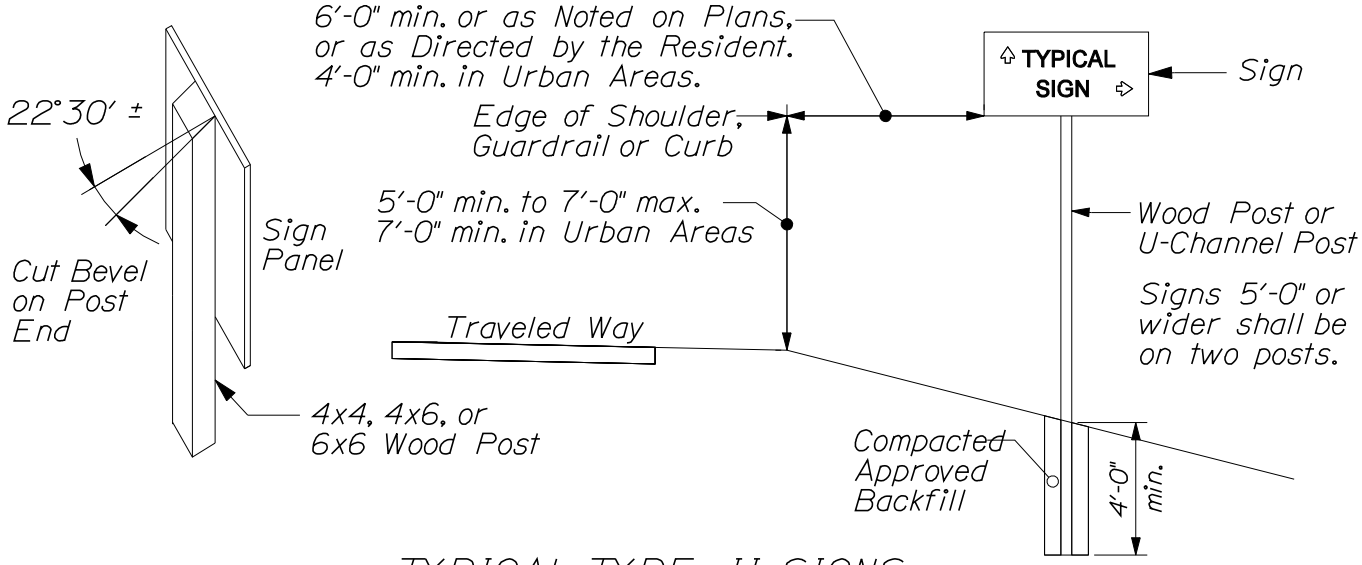

~ TYPICAL TYPE II SIGNS ~

~ LAP SPLICE NOTES ~

1. Gold spacers (1/2 " thick) are coupled with 3, 4 or 5 lb/ft stub posts.

2. Silver spacers (3/8 " thick) are coupled with 2, 2½, or 2¾ lb/ft stub posts.

3. Secure grade 9 bolts with 20 foot pounds of torque.

4. Same weight posts and stubs leave a small gap between the spacer bar and post (this is acceptable according to the manufacturer).

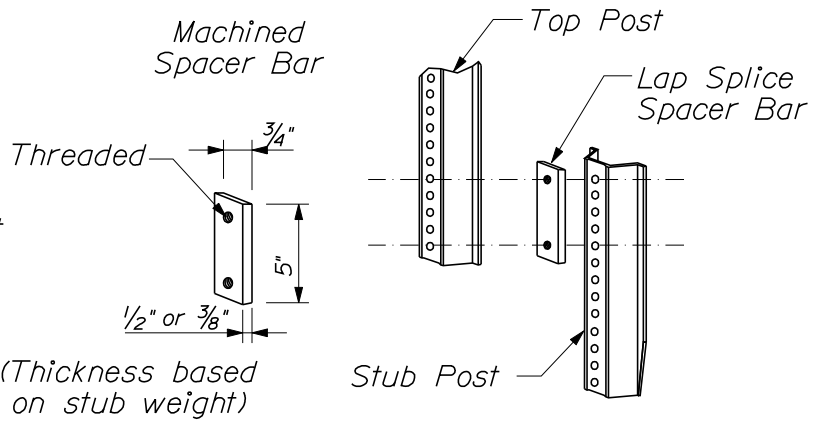

2 flat washers and self-locking hex nuts per post. A ¾" x 5" plated spacer bar shall be used per post. This spacer is to stiffen the connection.

~ INSTALLATION NOTES ~

1. Required- matching shaped u- channels. (weight per foot does not need to match)

2. Mount permanent signs that are wider than 30" (larger than 6.25 ft²) on wood posts.

3. Mount signs 5 feet (min.) Above pavement or curb (when present) in rural areas, 7 feet (min.) where parking is permitted within 200 feet of the sign (urban areas).

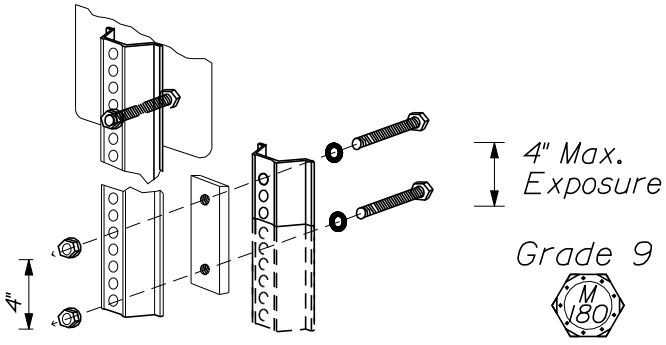

~ U-CHANNEL - LAP SPLICE ~
(Crash Worthy) Breakaway System

~ U-CHANNEL BREAK AWAYS ~

INSTALLATION OF TYPE II SIGNS
HIGHWAY SIGNING & BREAK AWAY POSTS

645(09)A

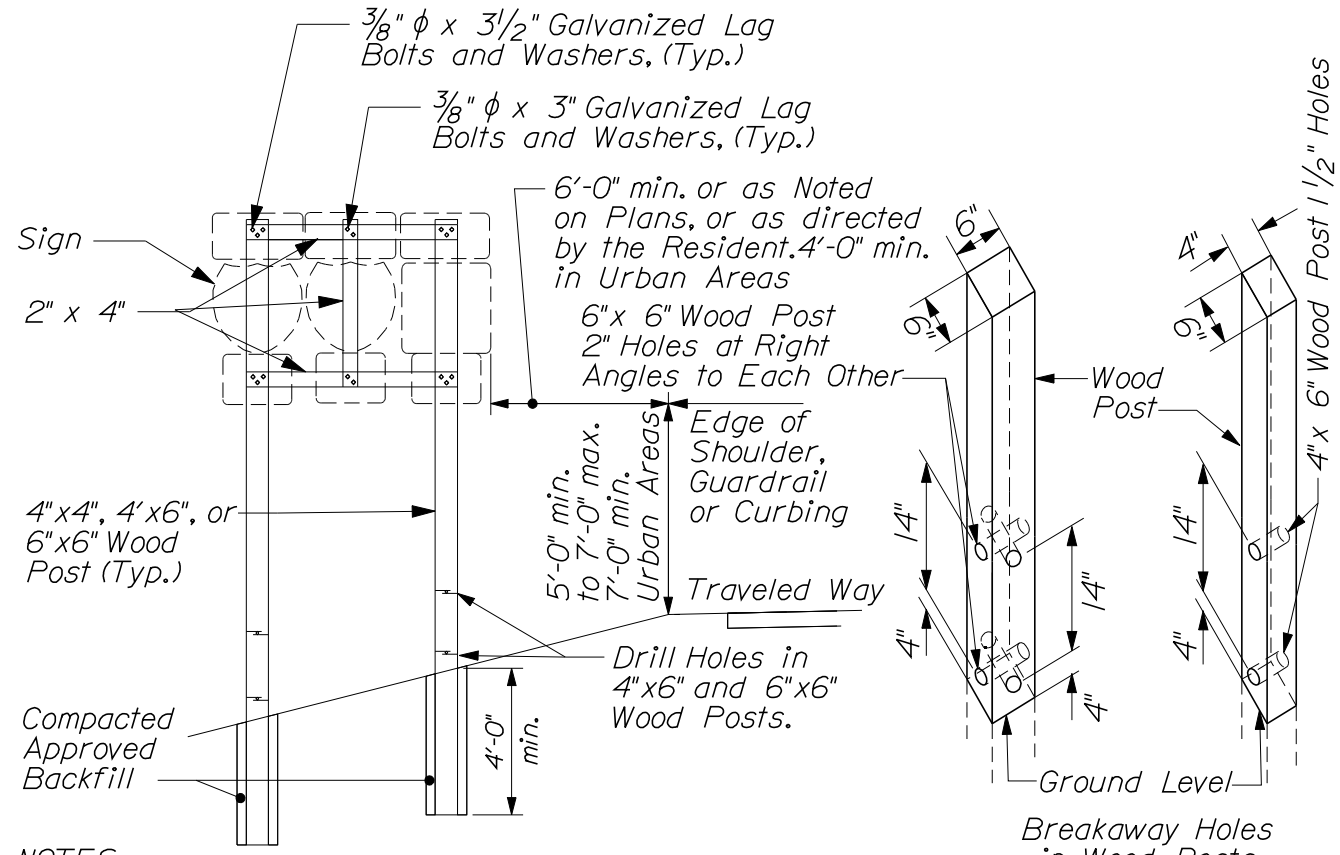

NOTES:
Refer to Section 645.061 of the Standard Specifications to determine the size of wood posts. All wood posts and brackets shall be pressure treated to CCA 40. On 4"x6" and 6"x6" wood posts, drill holes as shown above, to meet breakaway standards.

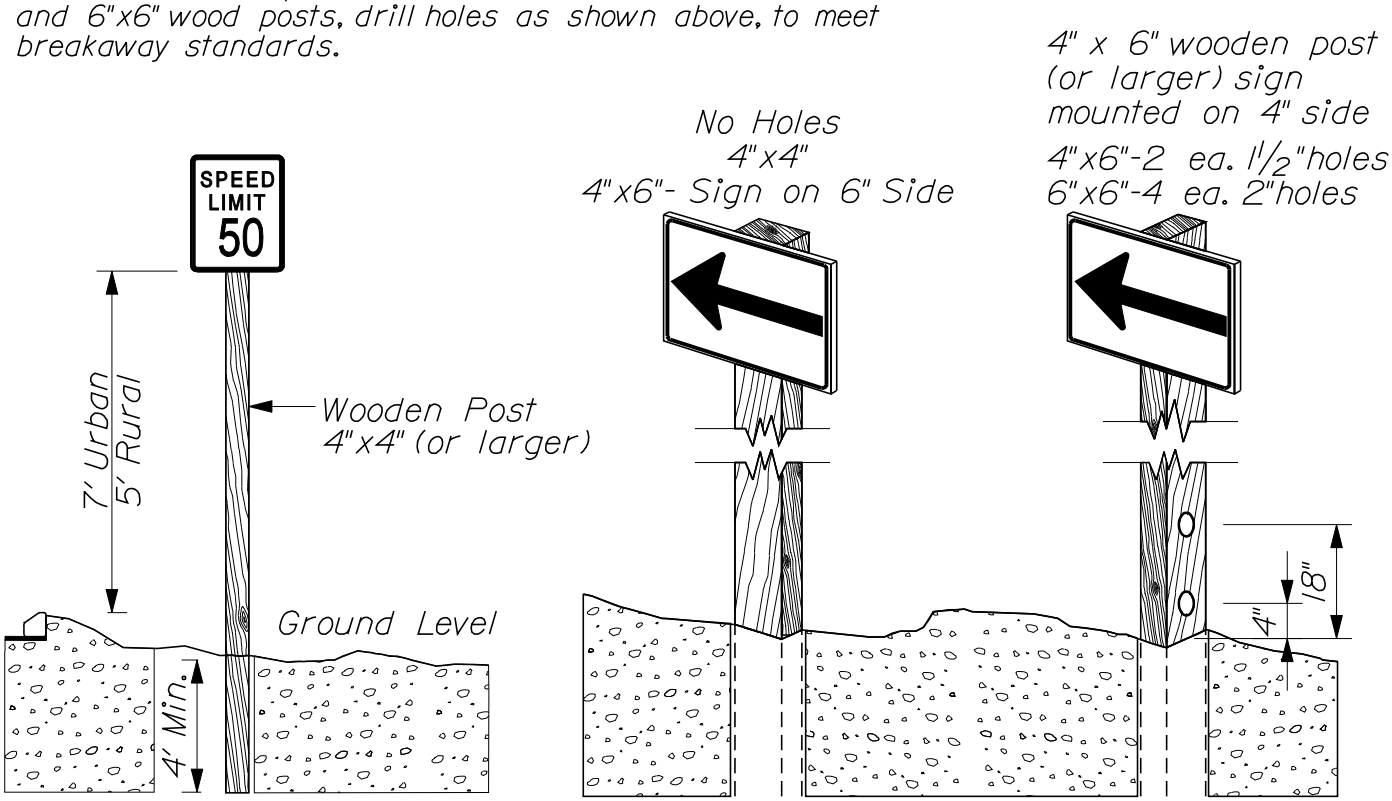

INSTALLATION OF TYPE II SIGNS
HIGHWAY SIGNING & BREAK AWAY POSTS

645(09)B

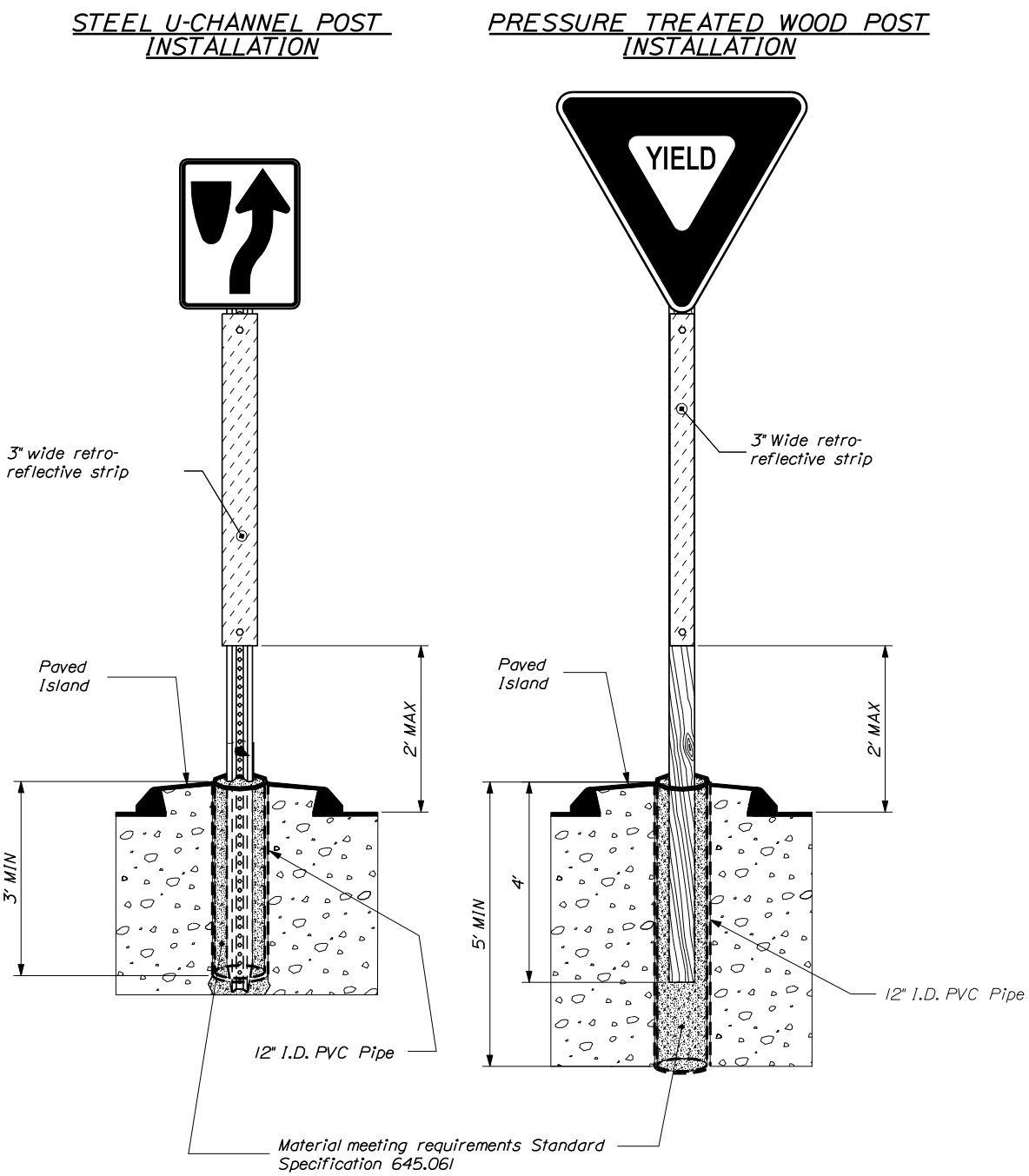

NOTES:

1) Posts to be plumbed & set in compacted/tamped material

2) Top of PVC pipe shall have no more than 1 inch reveal from finished surface pavement

3) Installation shall meet all requirements found in Standard Specification 645.061

~ ISLAND SIGN POST SLEEVE ~

INSTALLATION OF TYPE II SIGNS HIGHWAY SIGNING & BREAK AWAY POSTS

645(09)C

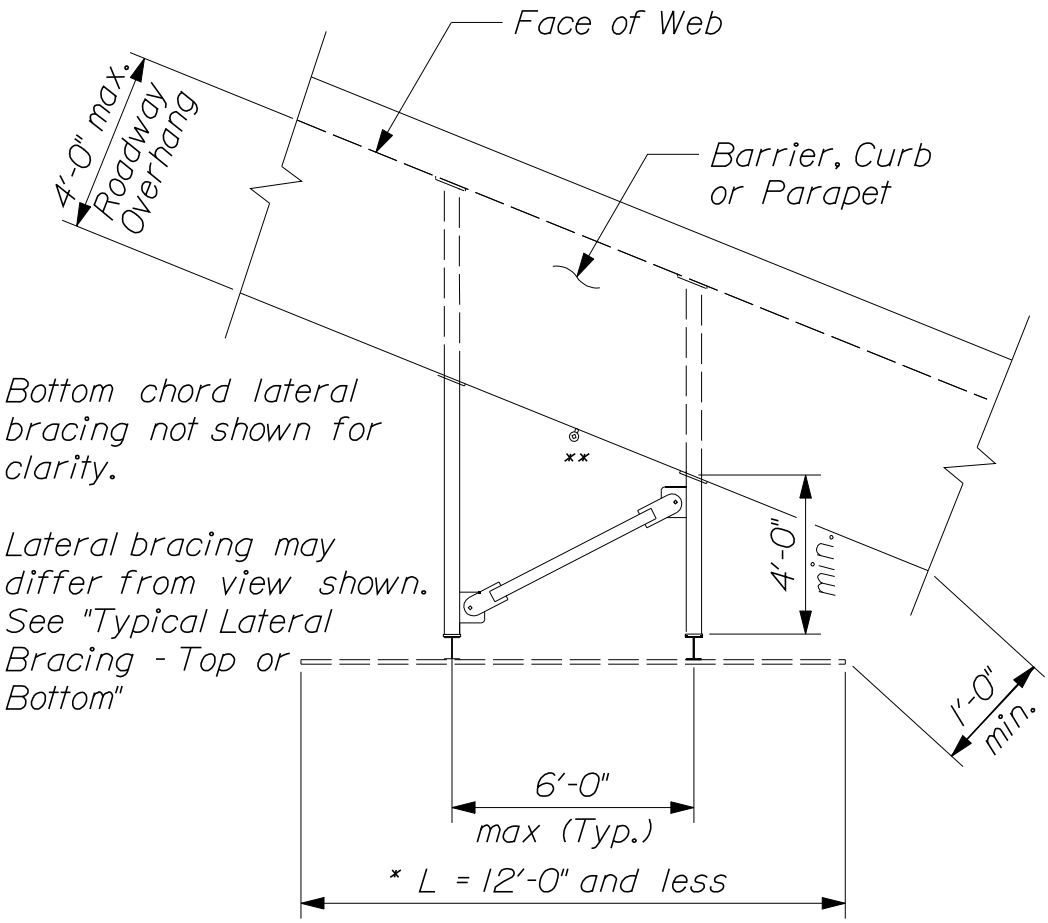

~ PLAN - SMALL SIGN PANEL SUPPORT LAYOUT ~

Max. skew permitted: 50 degrees
Max. height of sign permitted, 14'-0"

* Note: L = Width of sign

** Anchoring eyelet for barriers only
(See Anchorage Eyelet Detail)

ITEM NO. 645.13

OVERPASS MOUNTED SIGN SUPPORT HIGHWAY SIGNING

645(10)

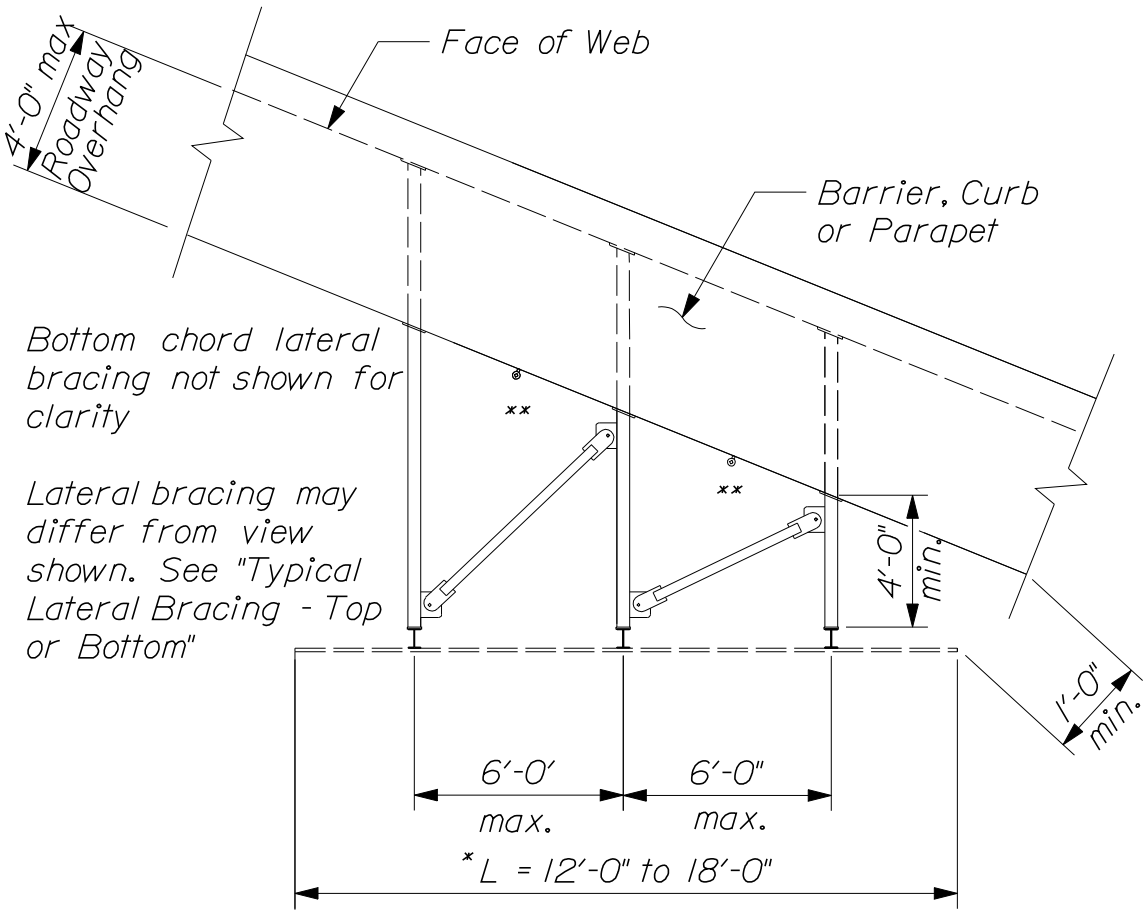

~ PLAN - MEDIUM SIGN PANEL SUPPORT LAYOUT ~

Max. skew permitted: 30 degrees
Max. height of sign permitted, 14'-0"

* Note: L = width of sign

** Anchoring eyelet for barriers only.
(See Anchorage Eyelet Detail)

ITEM NO. 645.13

OVERPASS MOUNTED SIGN SUPPORT
HIGHWAY SIGNING

645(11)

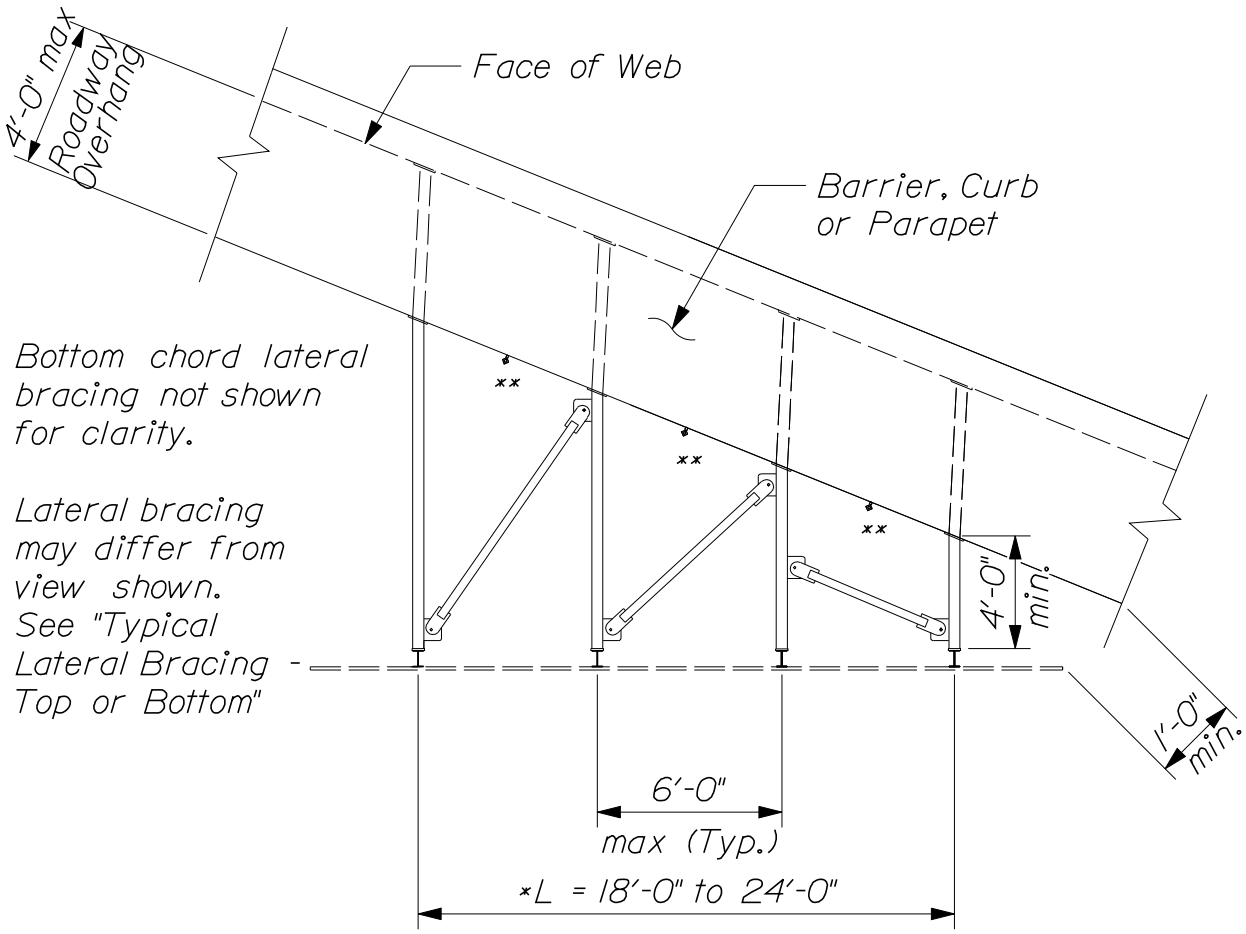

~ PLAN - LARGE SIGN PANEL SUPPORT LAYOUT ~

Max. skew permitted: 30 degrees
Max. height of sign permitted, 14'-0"

* Note: L = Width of sign

** Anchoring eyelet for barriers only.
(See Anchorage Eyelet Detail)

ITEM NO. 645.13

OVERPASS MOUNTED SIGN SUPPORT
HIGHWAY SIGNING

645(12)

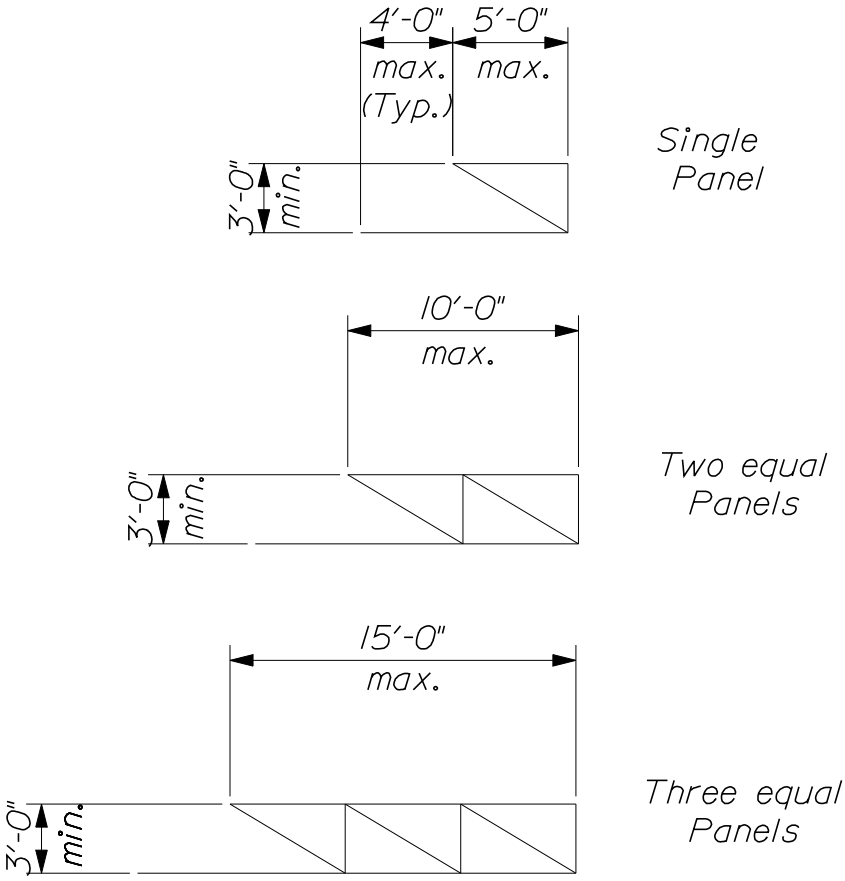

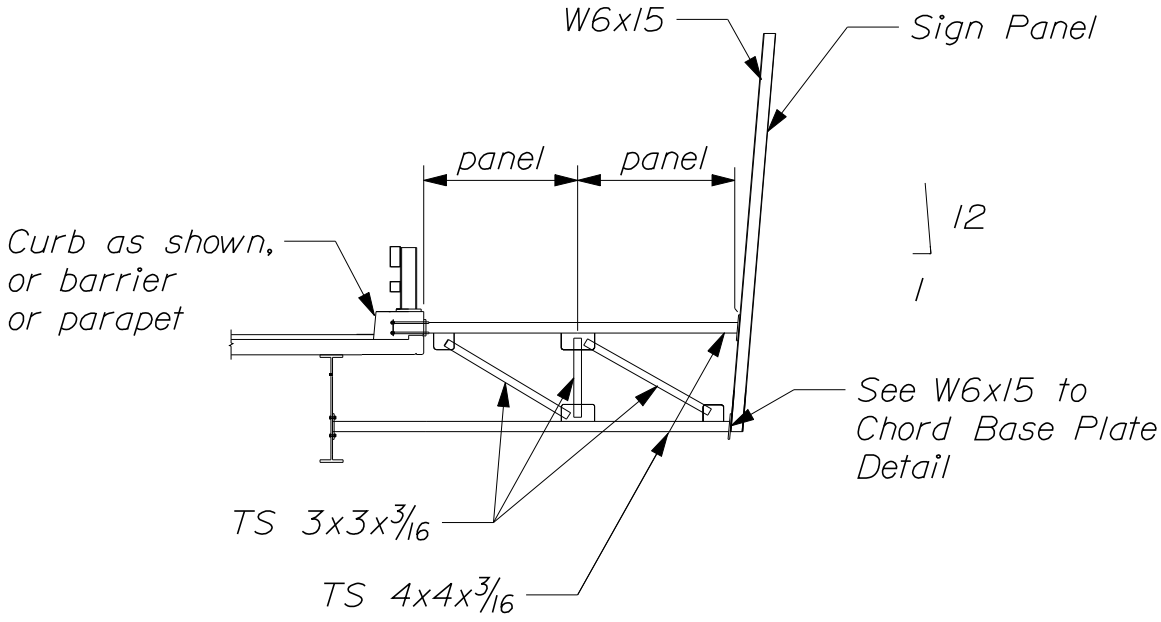

~ TYPICAL ELEVATION - VERTICAL BRACING ~

ITEM NO. 645.13

OVERPASS MOUNTED SIGN SUPPORT
HIGHWAY SIGNING

645(13)

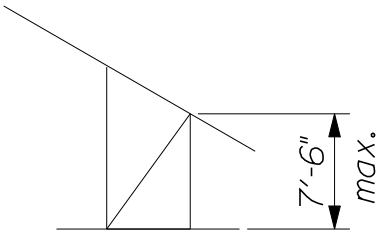

~ PLAN VIEW
2 - BRACKET ~

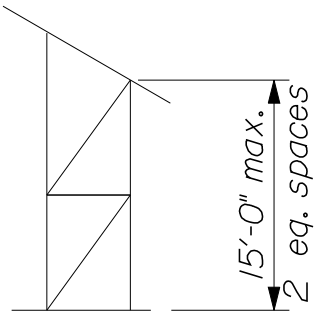

~ PLAN VIEW
2 - BRACKET ~

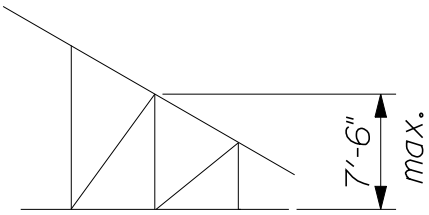

~ PLAN VIEW
3 - BRACKET ~

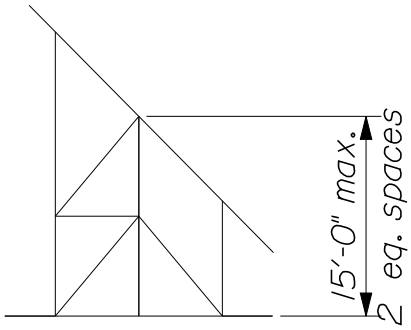

~ PLAN VIEW
3 - BRACKET ~

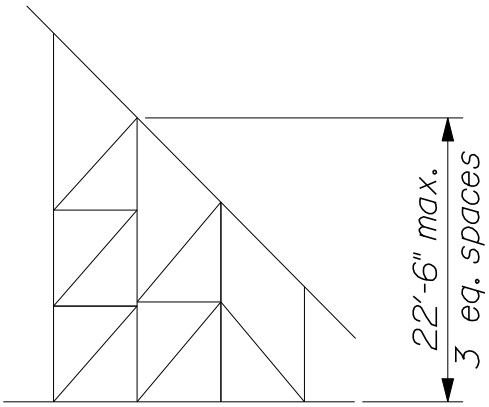

~ PLAN VIEW
4 - BRACKET ~

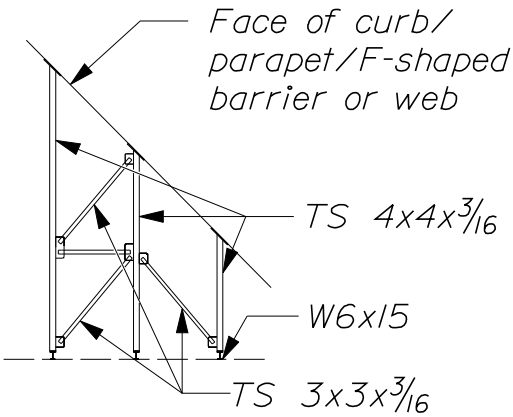

~ TYPICAL LATERAL
BRACING ~

~ TYPICAL LATERAL BRACING TOP OR BOTTOM ~

ITEM NO. 645.13

OVERPASS MOUNTED SIGN SUPPORT
HIGHWAY SIGNING

645(14)

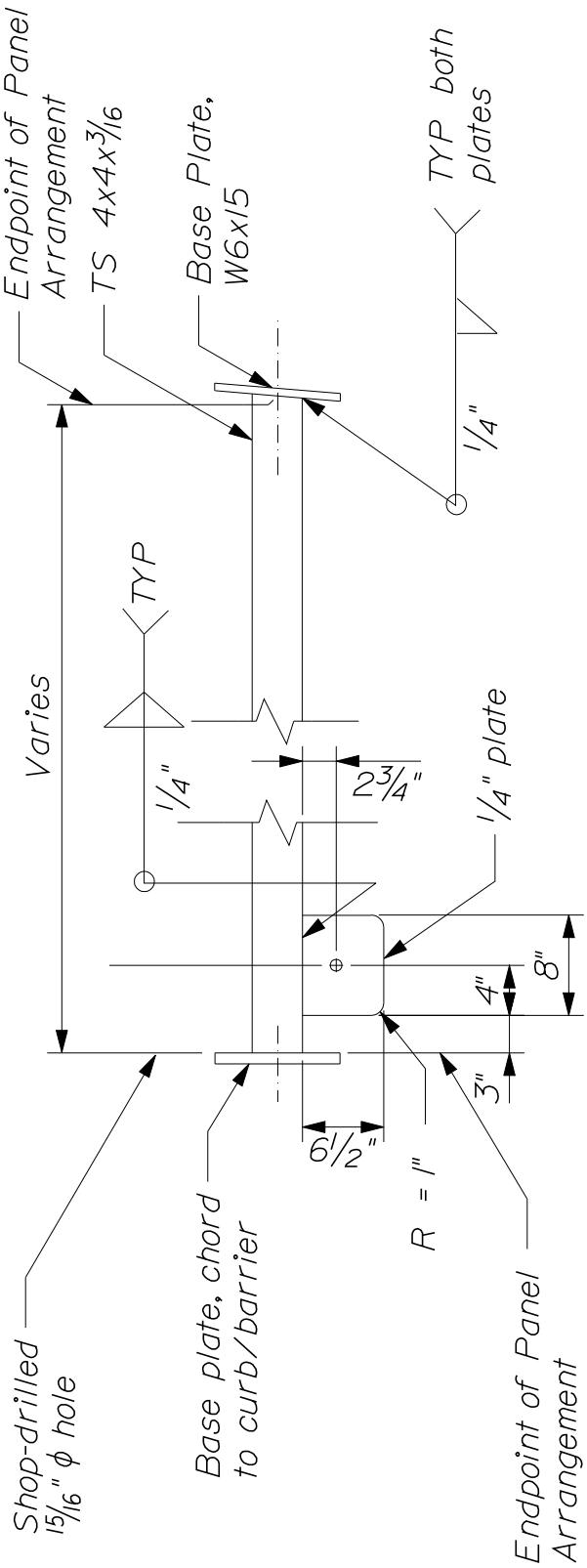

~ TYPICAL TOP CHORD ~

ITEM NO. 645.13

OVERPASS MOUNTED SIGN SUPPORT

HIGHWAY SIGNING

645(15)

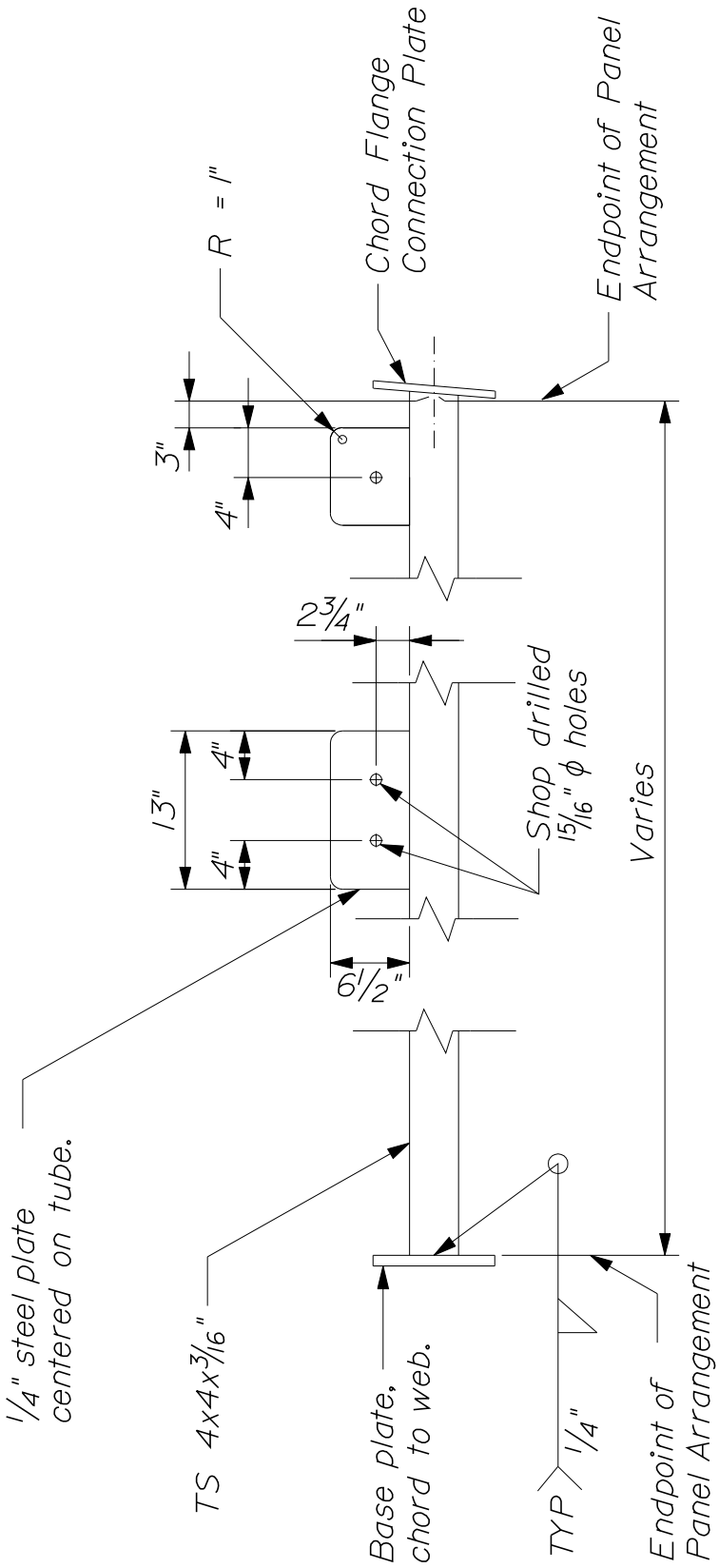

~ TYPICAL BOTTOM CHORD ~

ITEM NO. 645.13

OVERPASS MOUNTED SIGN SUPPORT

HIGHWAY SIGNING

645(16)

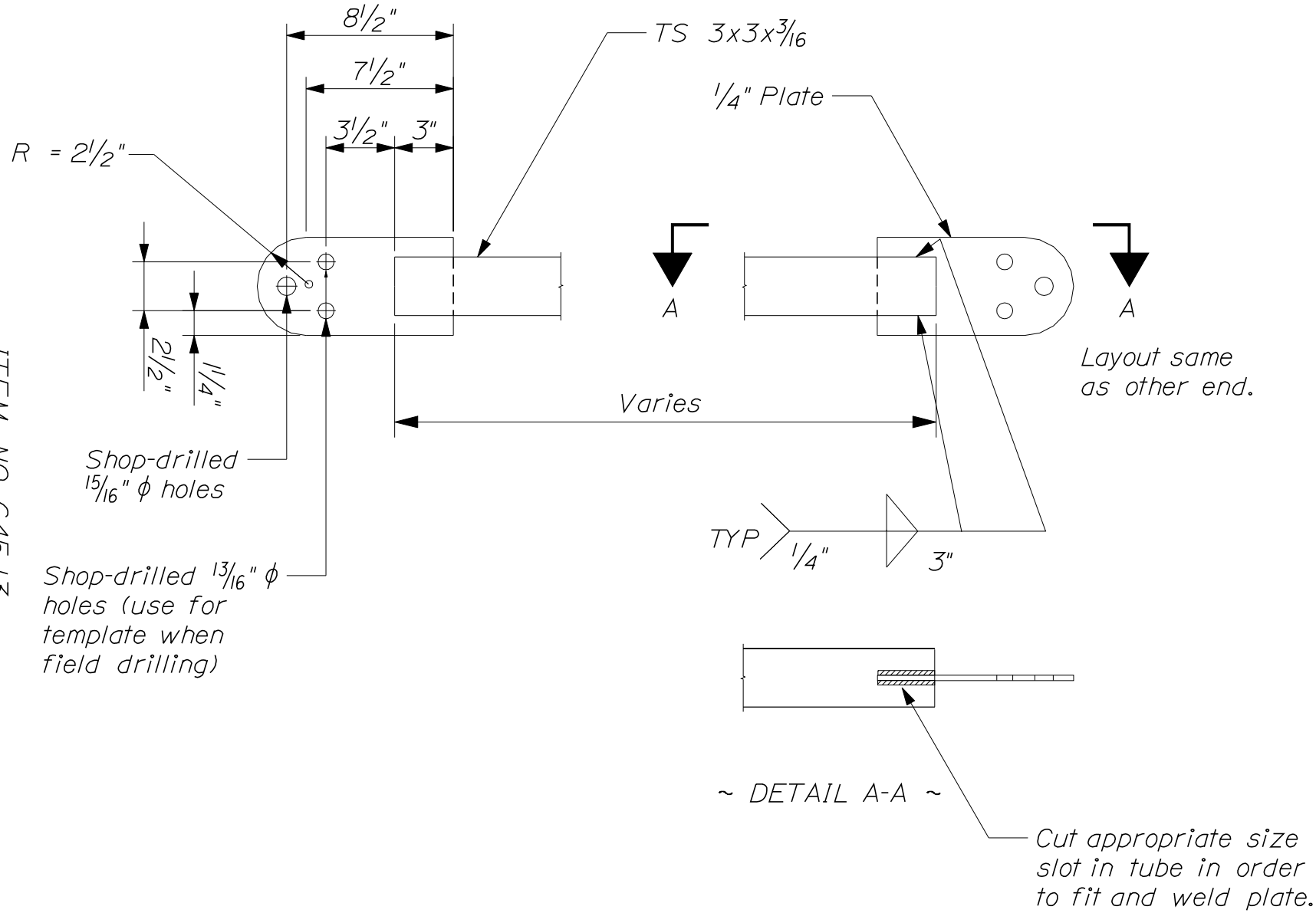

~ TYPICAL LATERAL AND VERTICAL BRACE ~

ITEM NO. 645.13

OVERPASS MOUNTED SIGN SUPPORT

HIGHWAY SIGNING

645(17)

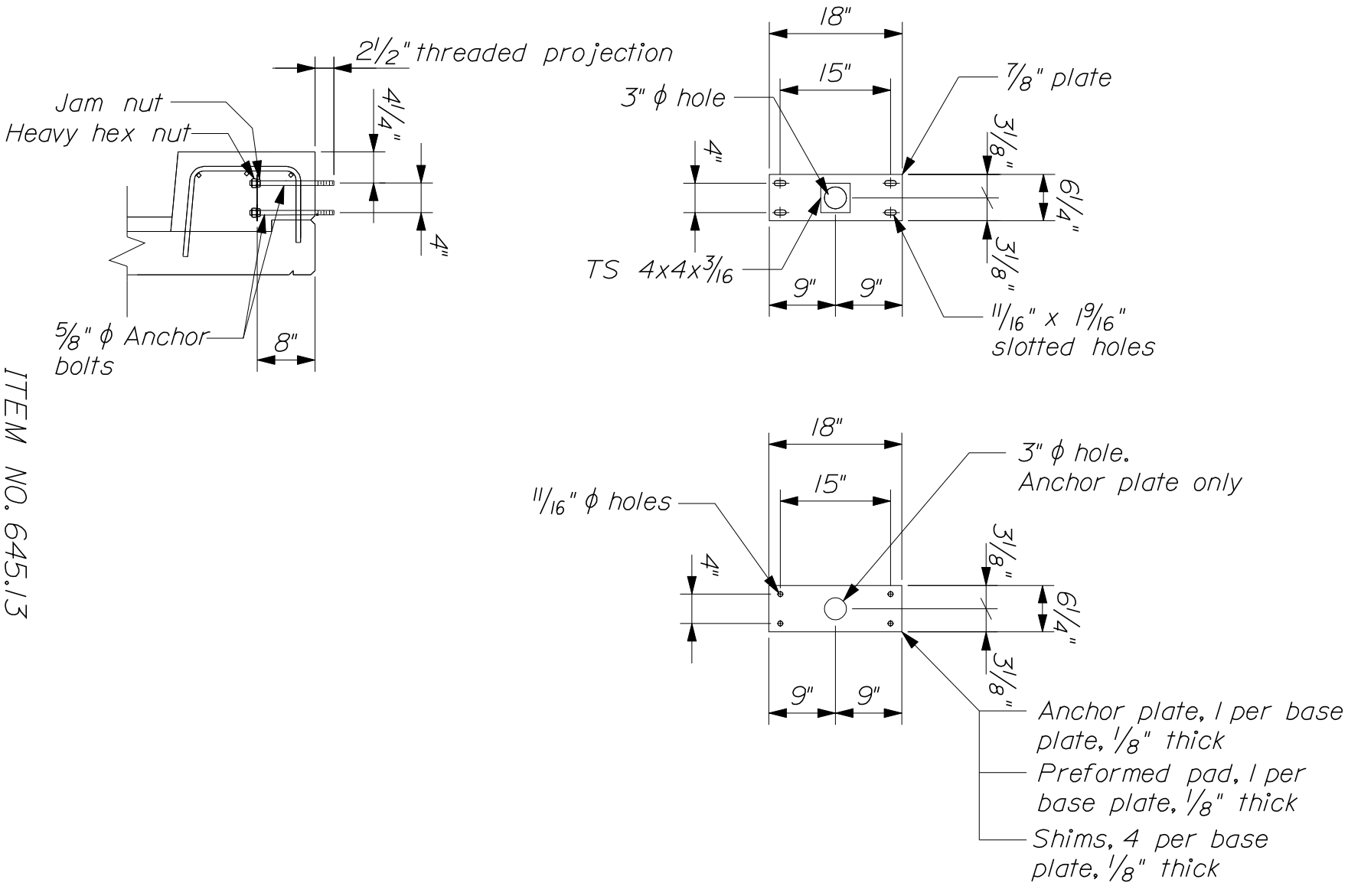

~ CURB TO CHORD BASE PLATE AND ANCHOR BOLT SYSTEM ~

ITEM NO. 645.13

OVERPASS MOUNTED SIGN SUPPORT

HIGHWAY SIGNING

645(18)

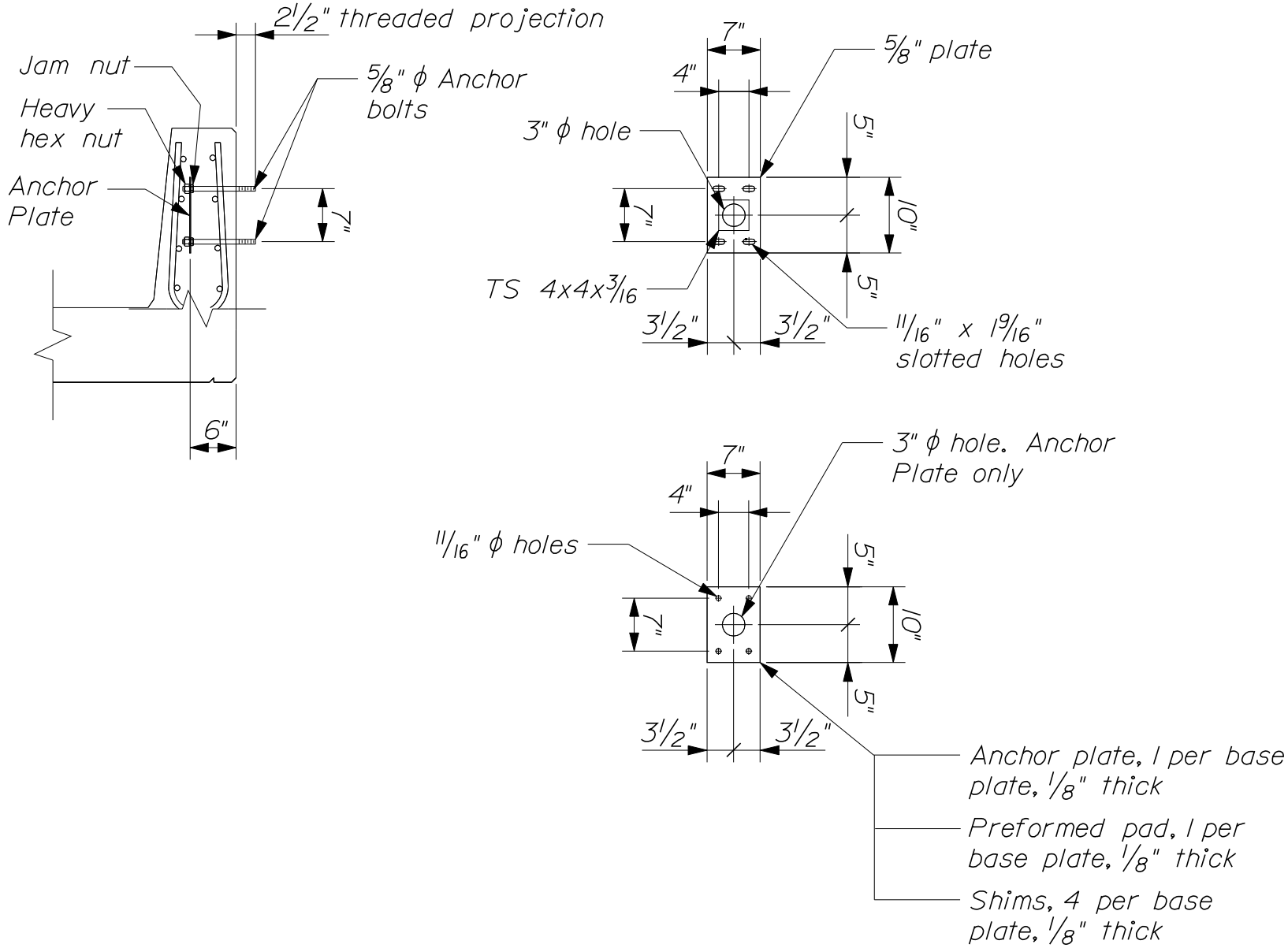

~ BARRIER/STEEL BEAM TO CHORD BASE PLATE AND ANCHOR BOLT SYSTEM ~

ITEM NO. 645.13

OVERPASS MOUNTED SIGN SUPPORT

HIGHWAY SIGNING

645(19)

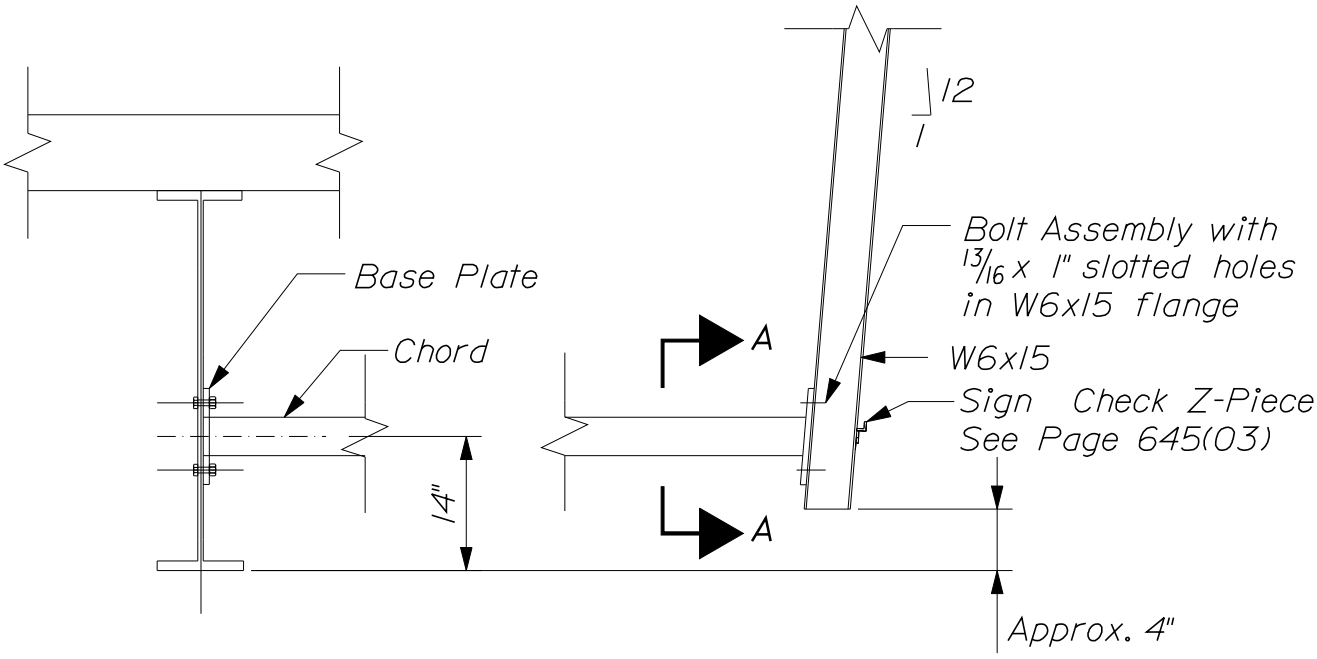

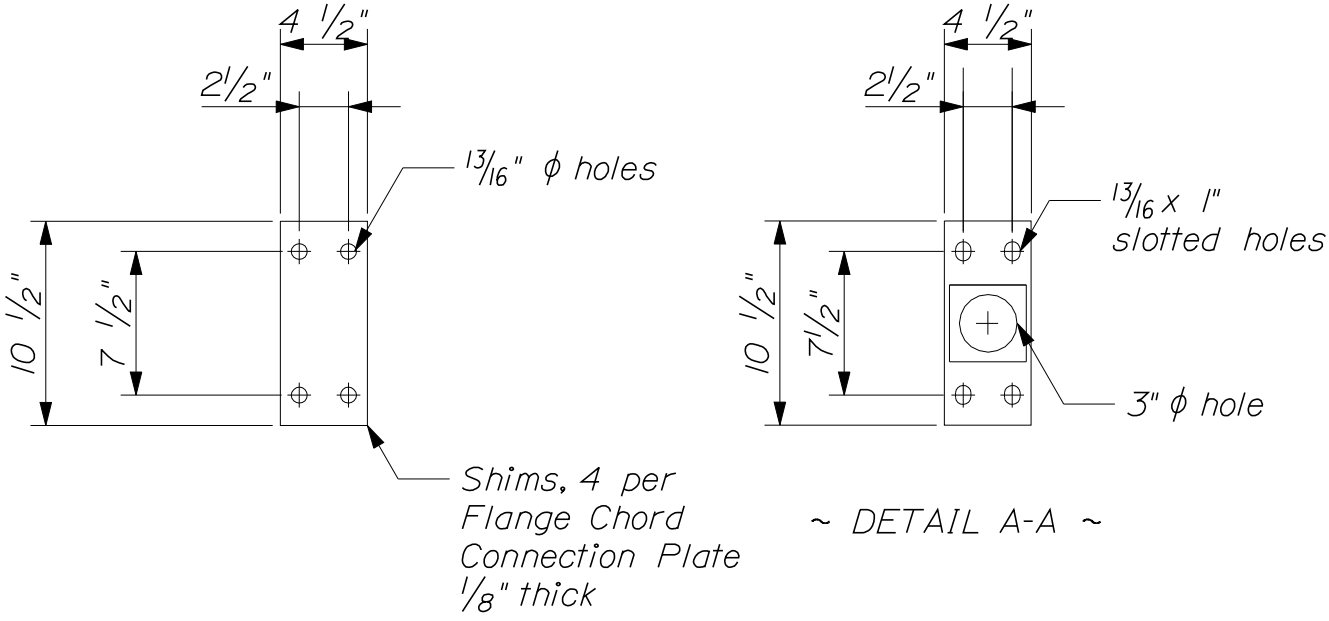

ITEM NO. 645.13

OVERPASS MOUNTED SIGN SUPPORT

HIGHWAY SIGNING

645(20)

* Anchorage Eyelet shall be attached so that it is capable of supporting a dead weight load of 5400 lbs (2400 kN)

Anchorage Eyelet shall be galvanized to the requirments of ASTM A153 or shall be Stainless Steel.

a. Block-out opening is 6" high by 6" wide.

b. Drill hole for eyelet shank 1/4" larger than shank diameter and fill void with grout selected from MaineDOT Prequalified List of Anchoring Material

c. Following installation of eyelet hardware, patch block-out with an MaineDOT approved patching material that matches the barrier concrete.

d. Nuts shall meet the requirements of ASTM A563.

e. Washers shall meet the requirements of ASTM F436.

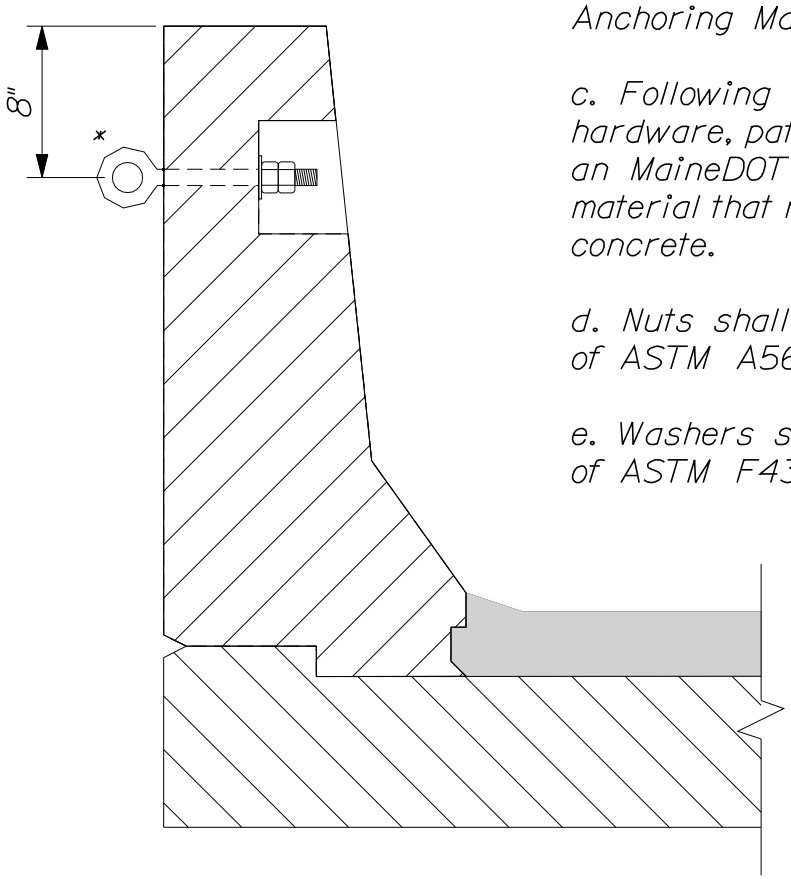

~ ANCHORAGE EYELET DETAIL ~

ITEM NO. 645.13

OVERPASS MOUNTED SIGN SUPPORT

HIGHWAY SIGNING

645(21)

NOTES:

1. The support frame dimensions shall be determined by the Contractor. These shall be based on the sign size, bridge skew angle, and cross-sectional geometry. Field verification of these parameters is the responsibility of the Contractor. The Contractor shall consider the possibility of interferences such as splice plates, drains, stiffeners, etc. in developing the shop drawings.

2. The Contractor shall select an appropriate layout using the views in these Standards as a guide in order to determine the number of brackets, the configuration of the vertical bracing and the configuration of the lateral bracing.

3. The support frame is designed such that the Contractor may fasten chords, vertical and horizontal bracing using a single bolt per connection in an over-sized hole for erection purposes. When the frame is in final desired position, adjustments may be accomplished and remaining bolt holes may be drilled in the field using the connected components as a template.

4. The Contractor shall select an appropriate chord base plate for attaching to a concrete barrier, curb or parapet, using the views in these Standards as a guide. An accommodating anchor bolt system shall be selected from this Standard.

5. All work and materials shall conform to the applicable provisions of Section 504, Structural Steel, of the Standard Specification Highways and Bridges.

6. All Steel components shall be galvanized after fabrication in accordance with ASTM A123, except that hardware used in the connections of the structural frame shall meet the requirements of either ASTM A153 or ASTM B695, Class 50, Type 1. Parts except hardware shall be blast-cleaned prior to galvanizing in accordance with SSPC-SP6.

7. Materials:

   Hollow steel sections shall meet the requirements of ASTM A500, Grade B.

   Steel plate shall meet the requirements of ASTM A572, Grade 50. Steel shapes shall meet the requirements of ASTM A992.

   Steel shim plates shall meet the requirements of ASTM A36.

ITEM NO. 645.13

OVERPASS MOUNTED SIGN SUPPORT

HIGHWAY SIGNING

645(22)

Bolting assemblies used in the connections of the structural frame shall be Heavy Hex Head 3/4" and meet the requirements of ASTM A325. The Contractor shall select appropriate bolt lengths.

Anchor bolt assemlies used to fasten the structural frame to a concrete curb, barrier or parapet shall meet the requirements of ASTM A449, Type I with a minimum yield strength of 55KSI.

Remaining materials used shall be as specified elsewhere in these Standards or in the Contract Documents.

8. Fastener nuts in anchor and bolt assemblies shall be tightened to a snug fit and given an extra 1/8 turn. Fastener assemblies in oversized holes shall have washers under bolt heads and nuts.

9. Holes that are field drilled shall be coated with an approved zinc-rich primer prior to final erection.

10. A random 25% of all base plate to chord welds and chord to Flange Connection Plate welds shall be MT inspected. Only a one-time repair is allowed on these welds without written permission of the Engineer. All other welds shall be subject to VT inspection.

11. Anchor bolts shall be installed with misalignments of less than 1:40 from theoretical location.

12. An anchorage eyelet shall be installed approximately midpoint between each bracket when a concrete barrier is utilized as the top chord attachment.

13. Preformed pads, specified in Section 713, Structural Steel and Related Material, of the Standard Specifications Highways and Bridges, shall be placed between each chord base plate and concrete surface.

14. The Contractor may use shim plates, as provided by this Standard, beneath all base plates and Flange Connection Plates as necessary, up to an adjustment of 1/2".

ITEM NO. 645.13

OVERPASS MOUNTED SIGN SUPPORT

HIGHWAY SIGNING

645(23)

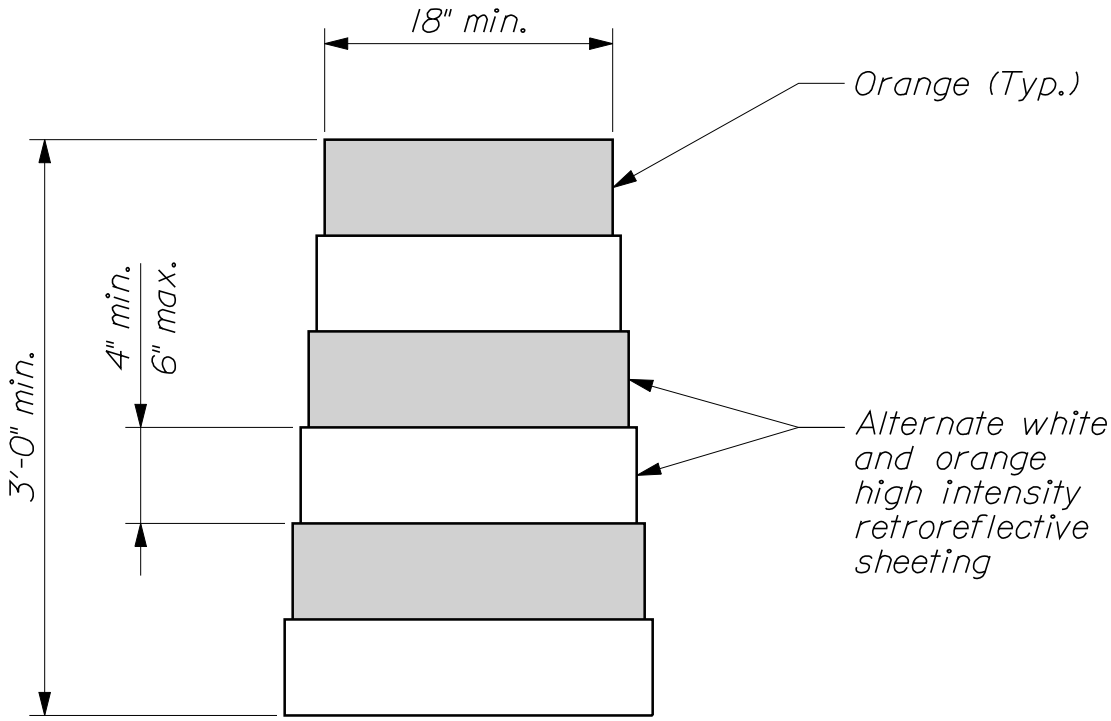

~ DRUM ~

(Non - metal)

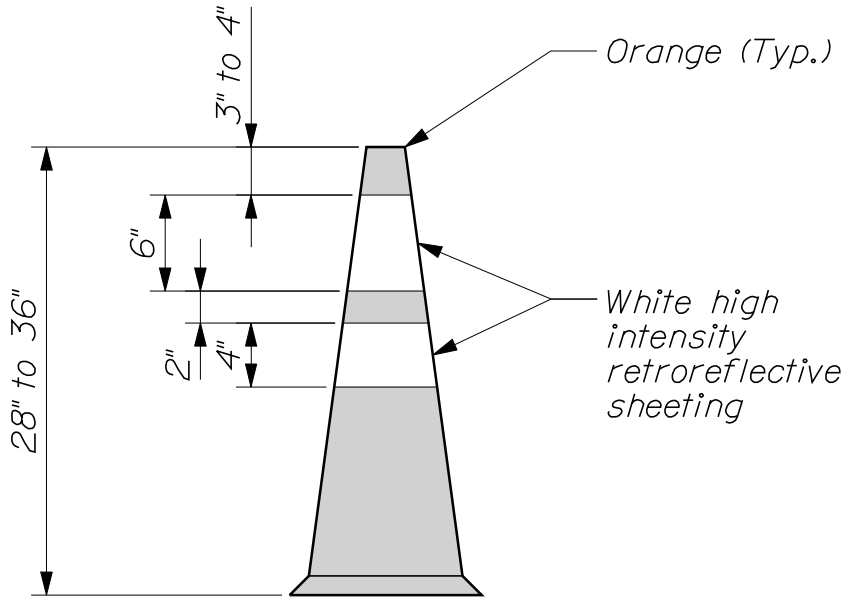

~ CONE ~

(Standard)

CHANNELIZING DEVICES

652(01)

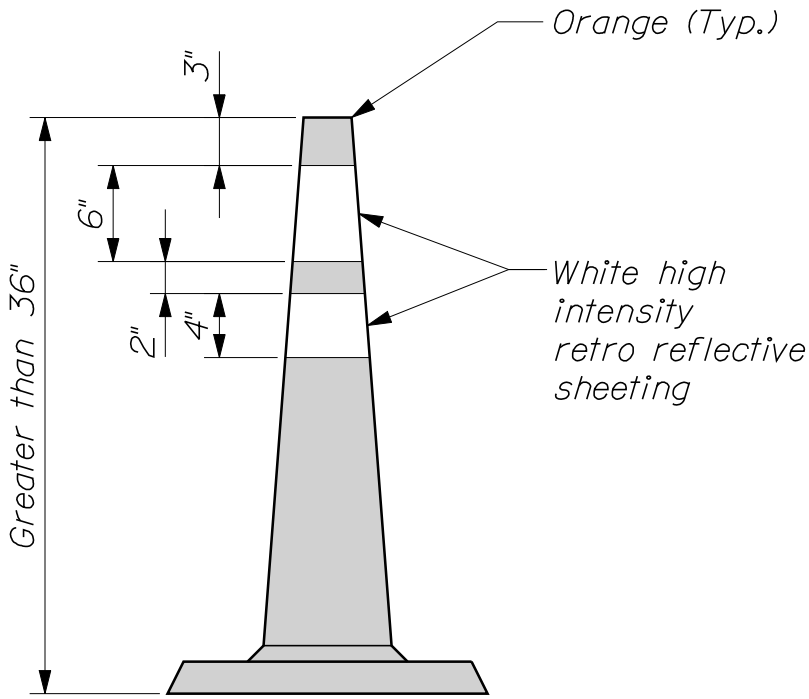

~ CONE ~

(High Ballasted)

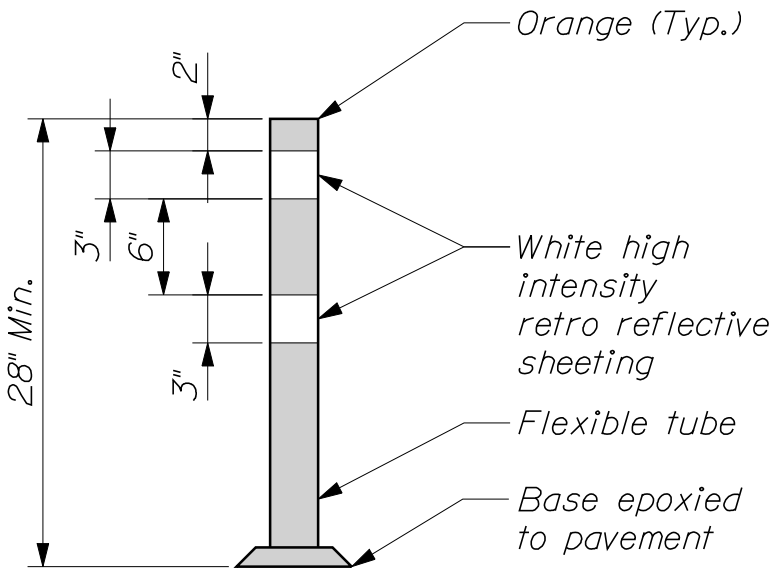

~ TUBULAR MARKERS ~

(Flexible)

CHANNELIZING DEVICES

652(02)

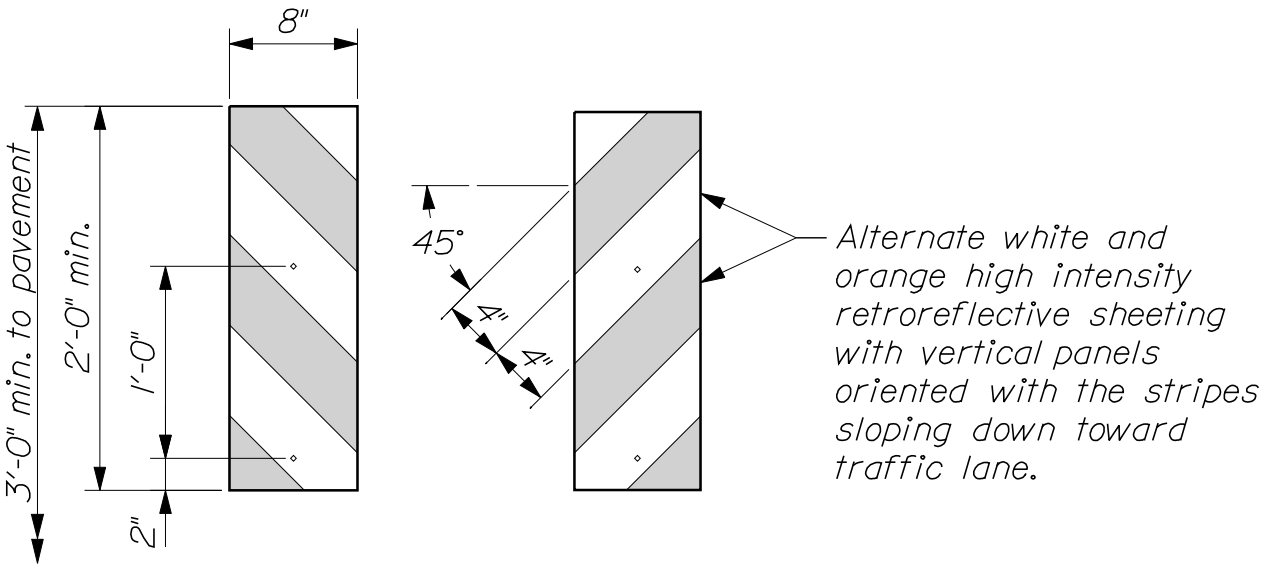

Where the height of the vertical panel itself is 36" or greater a panel stripe width of 6" shall be used.

~ VERTICAL PANELS ~

CHANNELIZING DEVICES

652(03)

NOTES:

1. Vertical panels shall have alternate orange and white high intensity retroreflective stripes as shown.

2. Drums may be weighted with up to 22 Lbs of dry sand.

3. Ballast shall not be placed on top of a drum.

4. Temporary raised pavement marker color shall correspond with pavement striping color as follows: clear markers for white striping and amber markers for yellow striping.

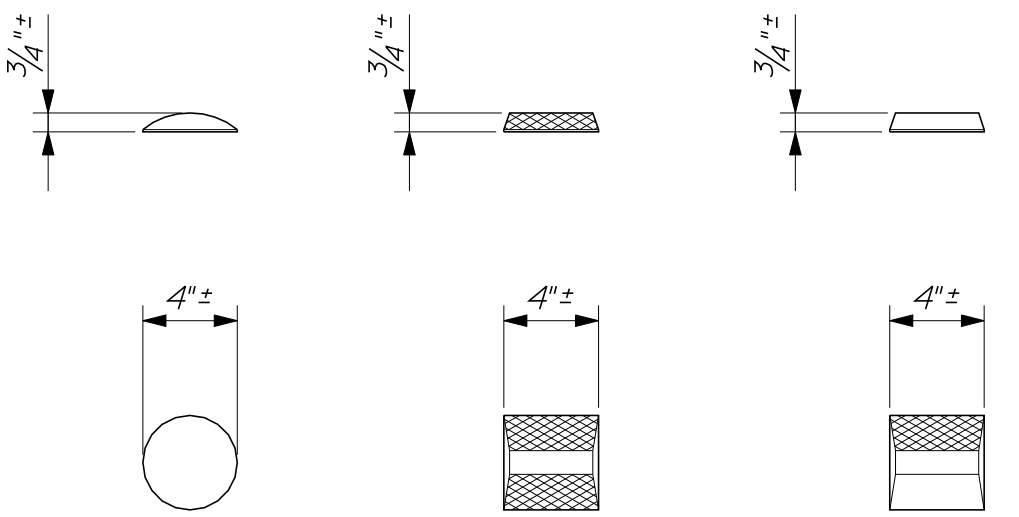

Type "A" Type "B" Type "C"

~ RAISED PAVEMENT MARKERS ~

CHANNELIZING DEVICES

652(04)

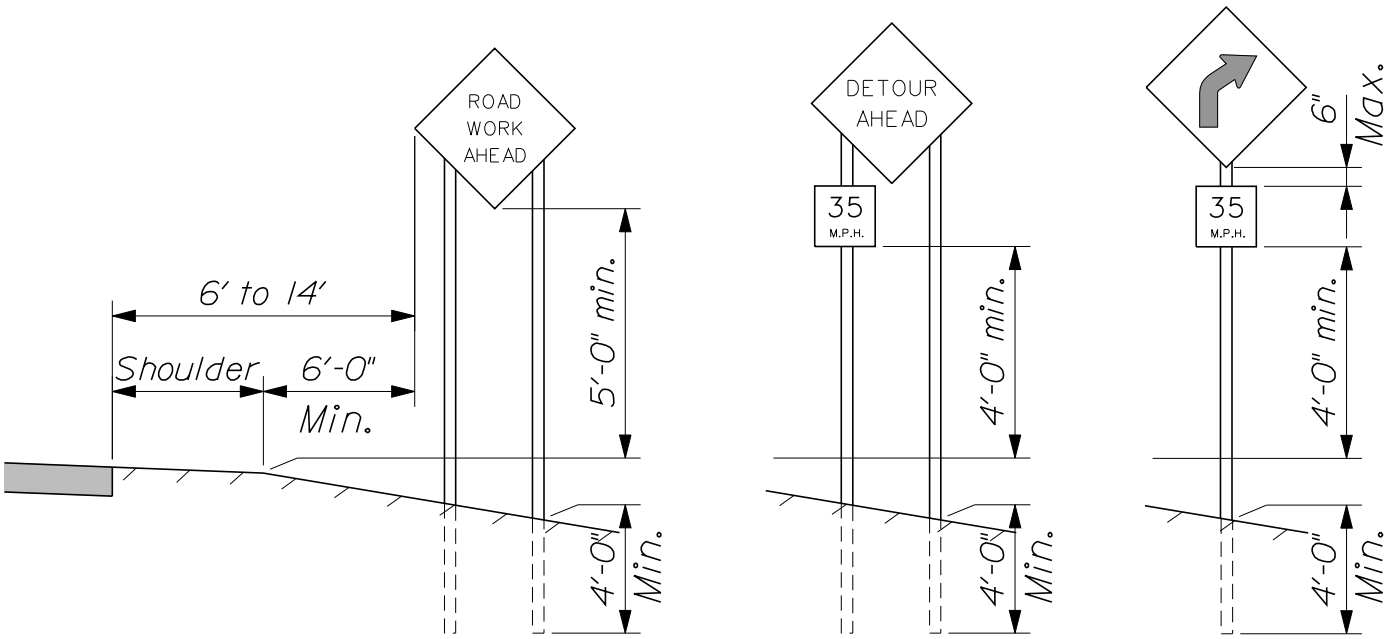

~ RURAL AREA ~
(Fixed signs)

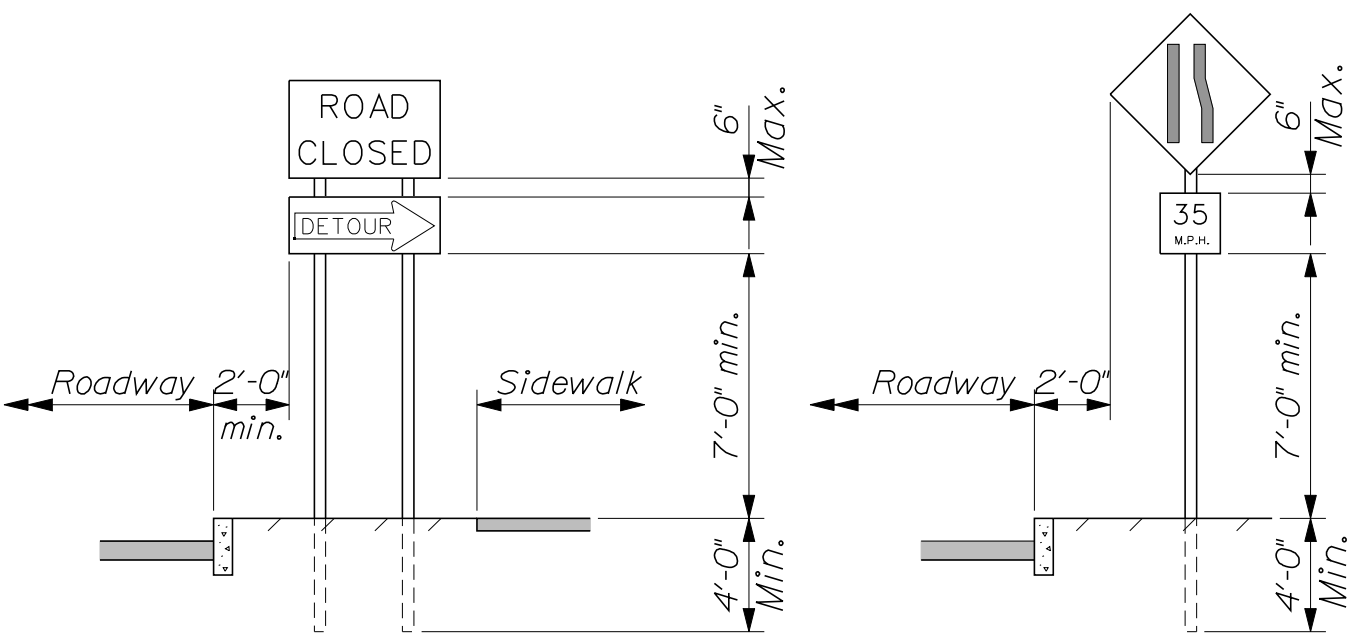

~ URBAN AREA ~
(Fixed signs)

CONSTRUCTION SIGNS

652(05)

NOTES;

1. All signs shall conform to the applicable provisions of the current edition of the "Manual on Uniform Traffic Control Devices for Streets and Highways", FHWA; and to "Standard Highway Signs", FHWA. Refer to current edition of MUTCD.

2. Steel U-channels are required as sign posts.

3. Mount signs that are wider than 3 feet or larger than one square yard in area on two or more posts.

4. When parking is permitted within 200 feet of the sign, mount the sign a minimum of 7 feet above the pavement surface.

5. When using lap splice see detail 645(09)A for installation requirements.

CONSTRUCTION SIGNS

652(06)

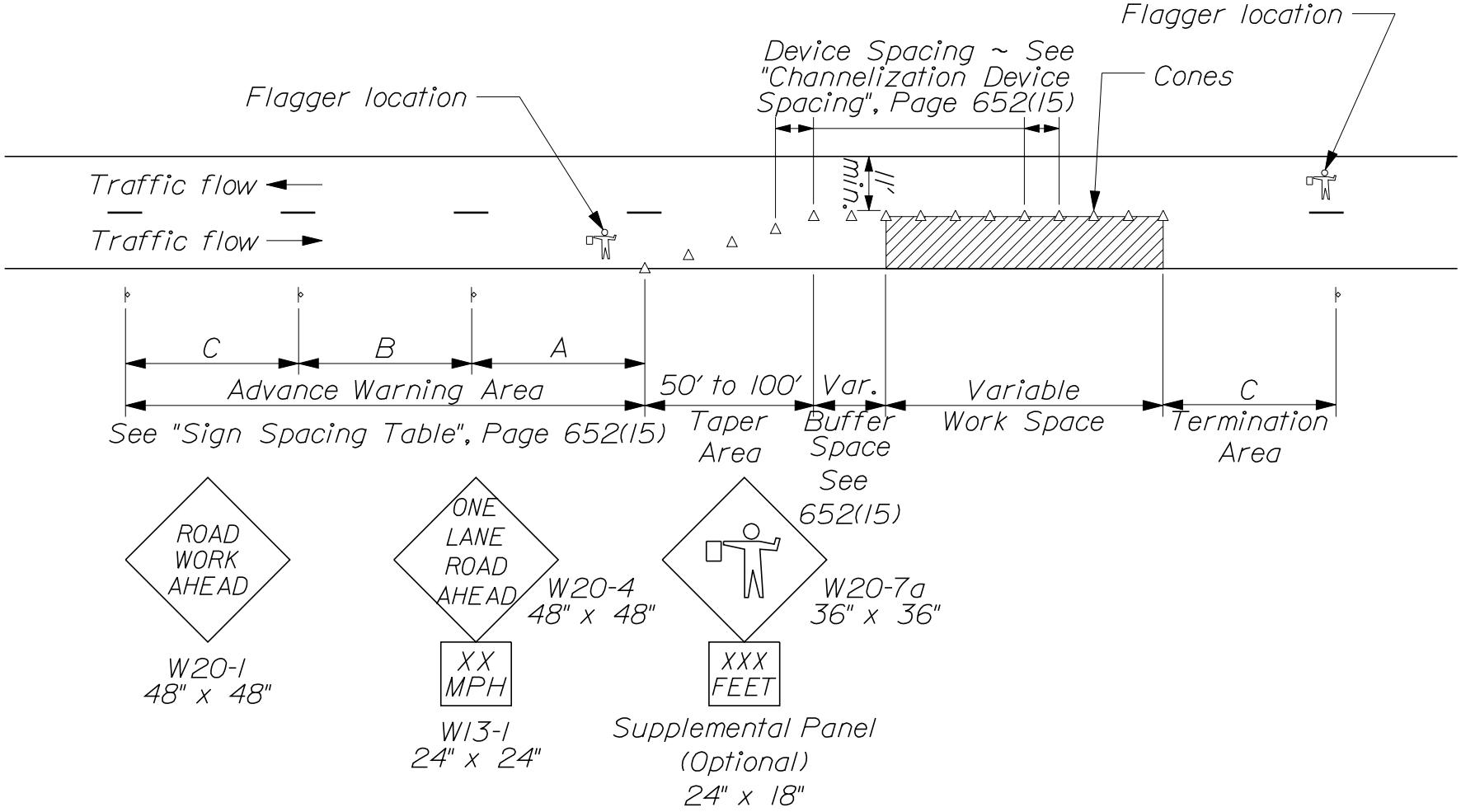

~ TYPICAL APPLICATION: TWO - WAY, TWO LANE ROADWAY, CLOSING ONE LANE USING FLAGGERS ~

NOTES:

1. For operations that require a shoulder closure for a day or less, drums may be replaced with Type "A" Cones.

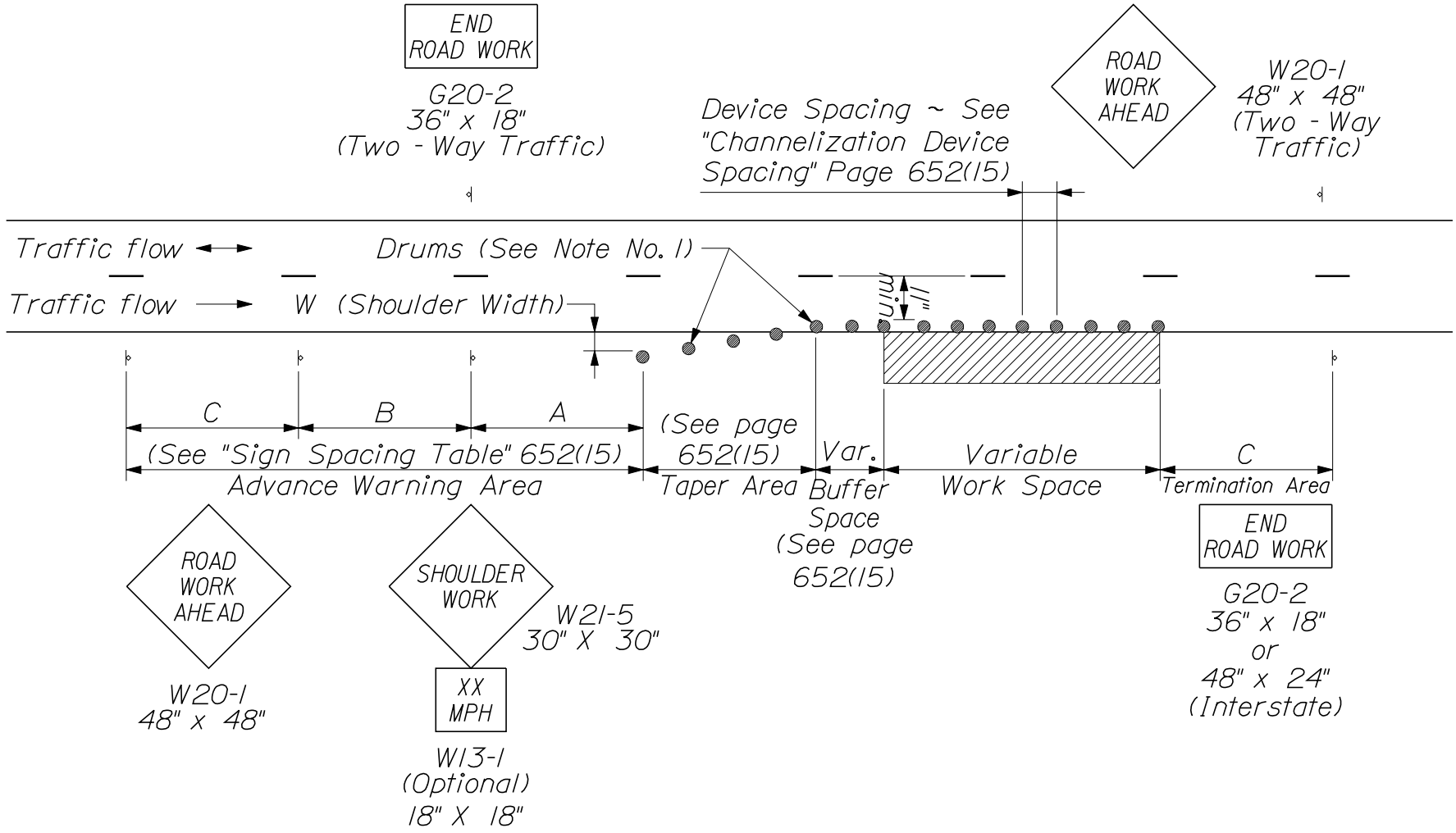

~ TYPICAL APPLICATION: ONE - WAY OR TWO - WAY, TWO LANE ROADWAY, CLOSING SHOULDER ~

NOTES:

1. Barrier placement is in accordance with the most current edition of the AASHTO Roadside Design Guide.
2. Terminate barrier ends outside the clear zone or protect the ends with an impact attenuator.
3. Right lane closure is shown. For left lane closure, substitute signing with W20-5L & W4-2L.

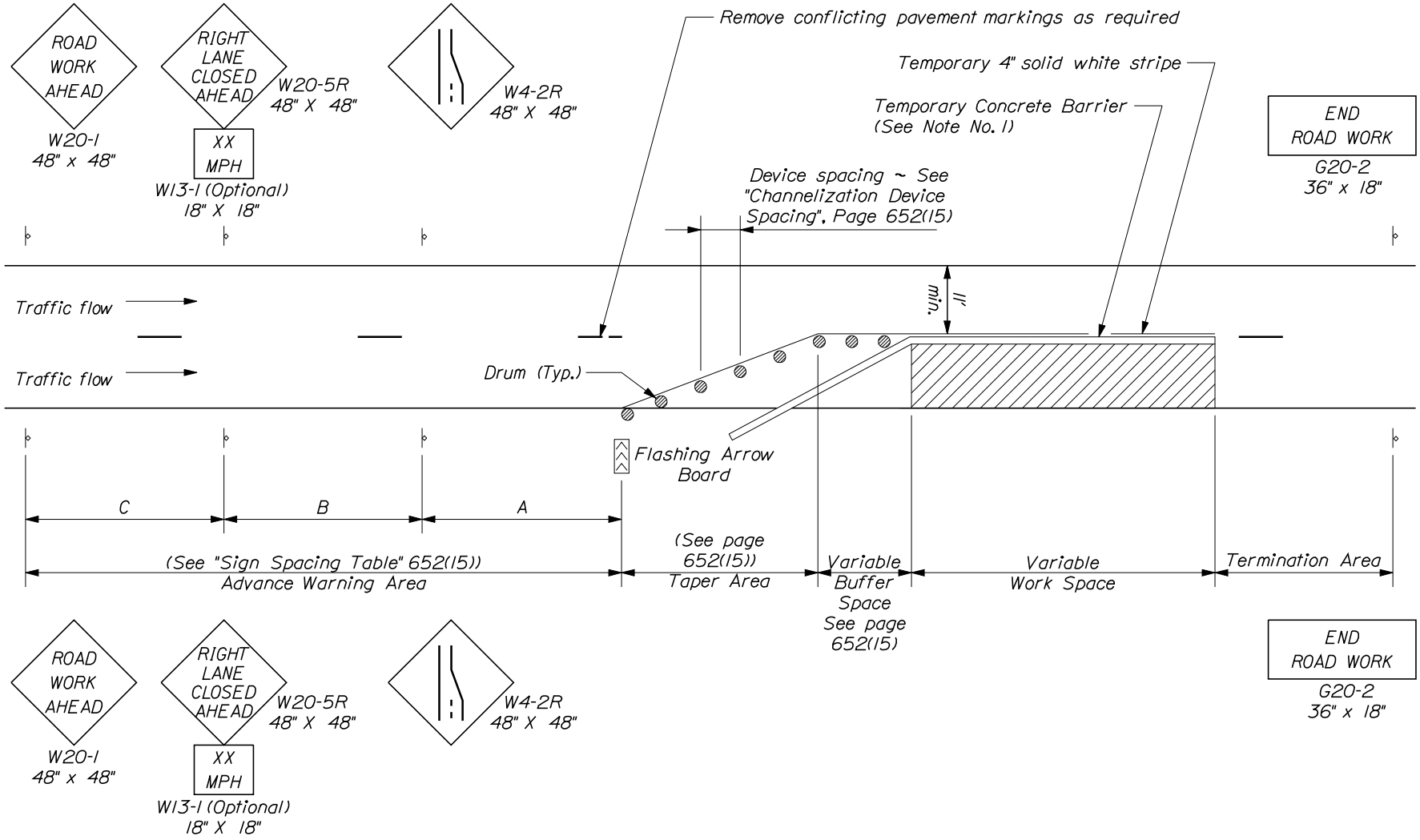

~ TYPICAL APPLICATION: NON-INTERSTATE, ONE-WAY, TWO LANE ROADWAY, CLOSING ONE LANE, USING TEMPORARY CONCRETE BARRIER (55 MPH OR LESS) ~

CONSTRUCTION TRAFFIC CONTROL

652(09)

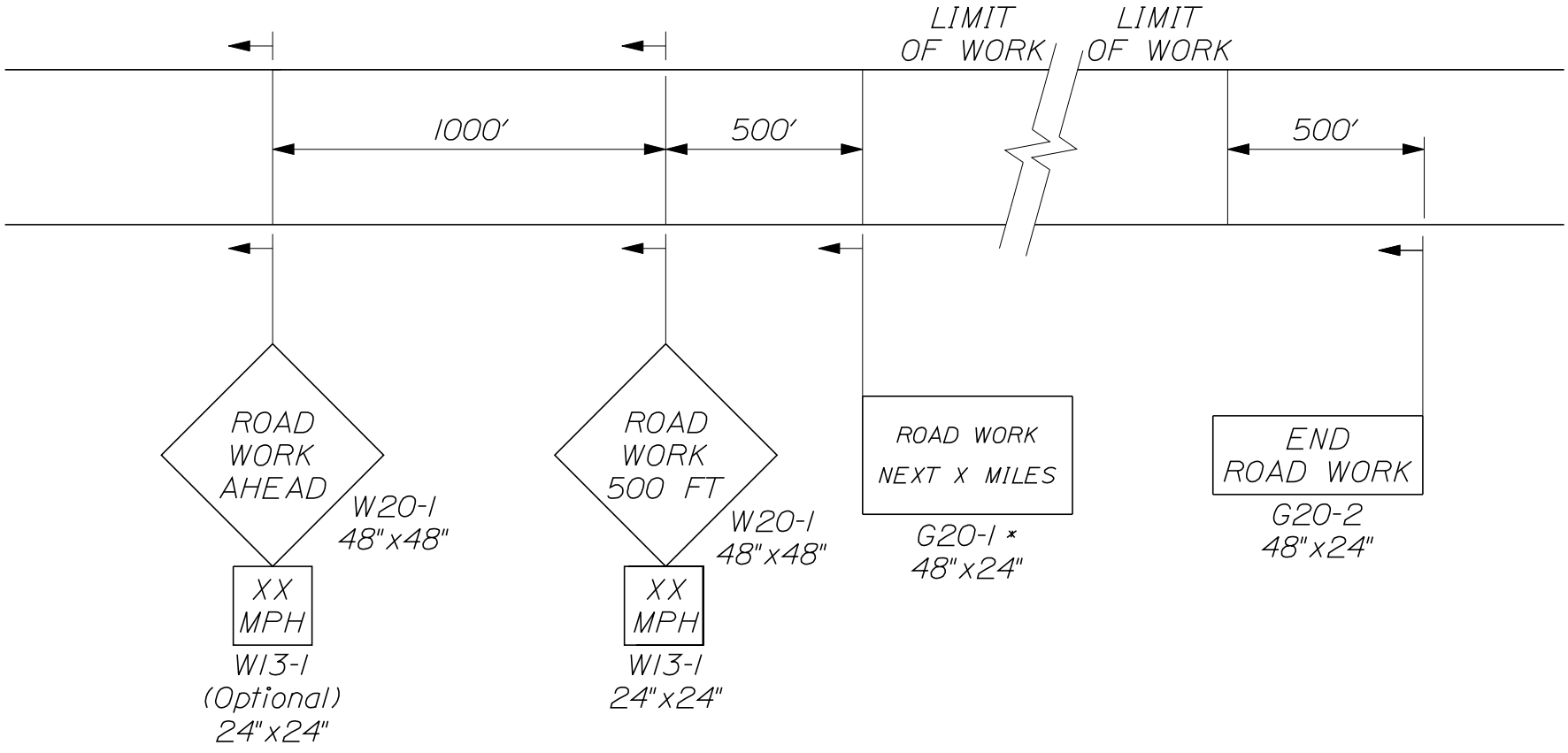

* Round to nearest mile & do NOT use if project length is less than 3/4 of a mile

~ PROJECT APPROACH SIGNING ~
EXPRESSWAY

NOTES:
All Work Zone Speed Limit Reductions shall be approved by the Resident.
Omit W20-1 if lane closure signing array is within project limits.
Alter pavement markings as required.
Use similar signing for left lane closure.
Road Work 2 Miles and 3 Miles signs may be needed, as per resident, based on traffic volume.

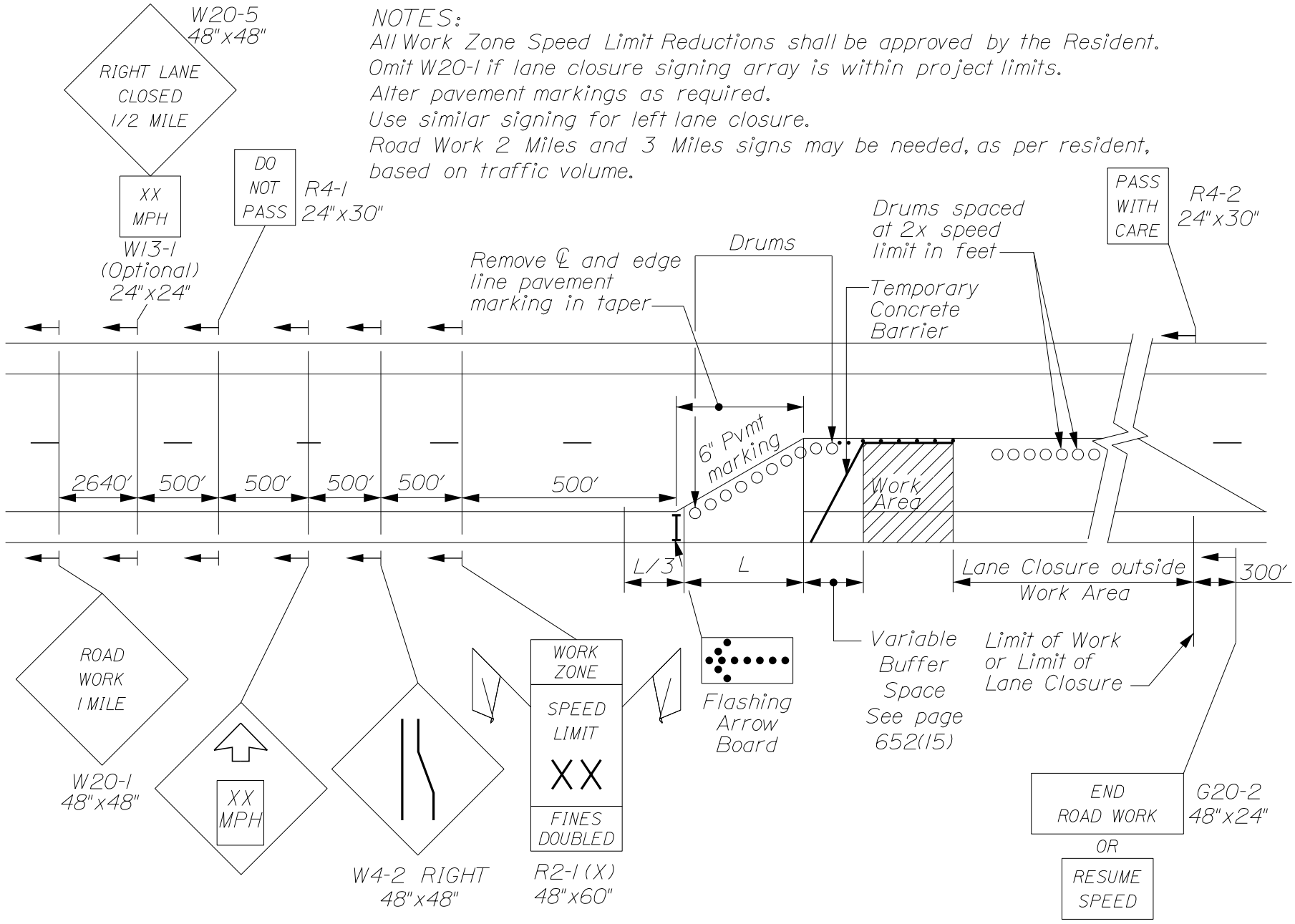

~ EXPRESSWAY LANE CLOSURE ~

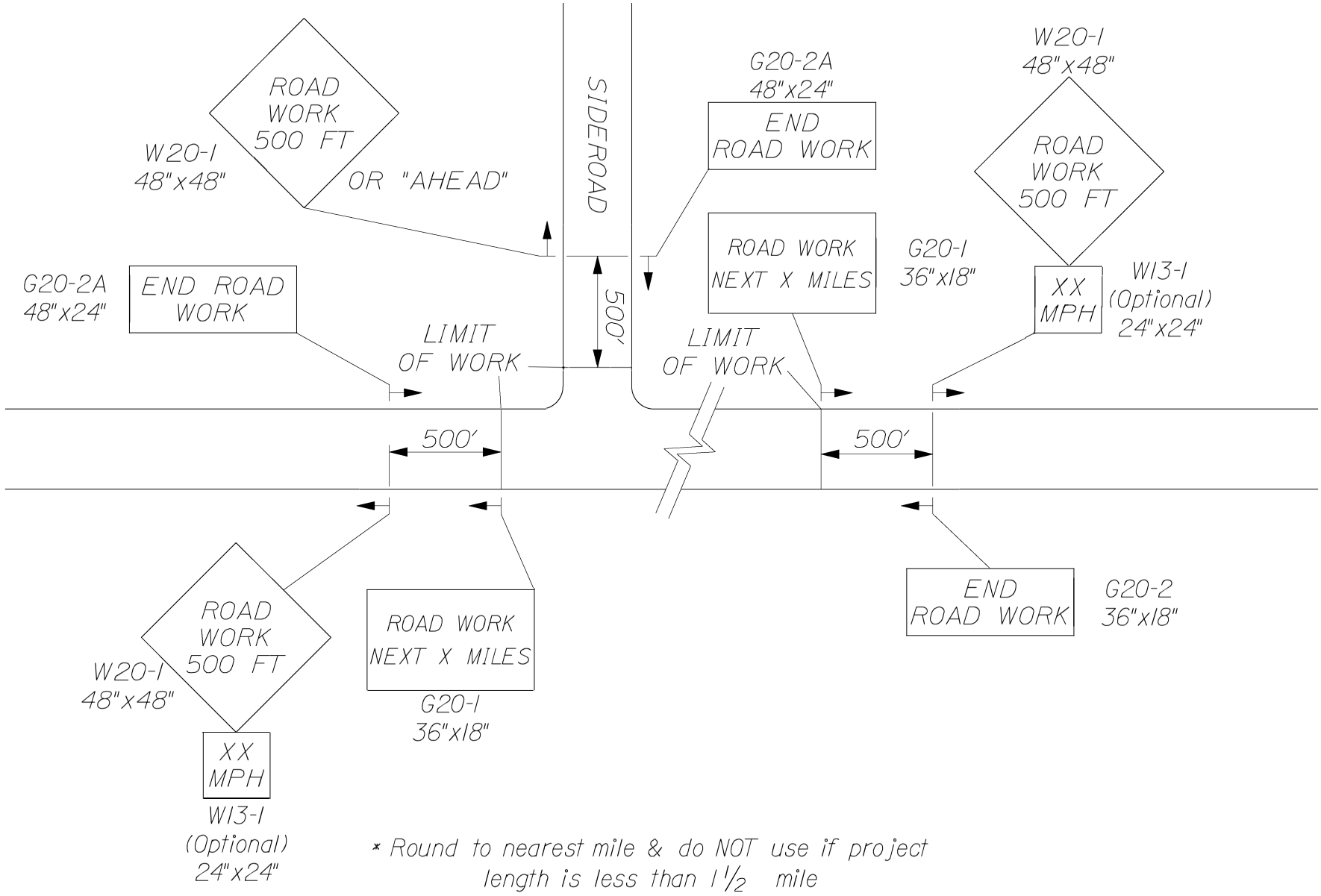

* Round to nearest mile & do NOT use if project length is less than 1½ mile

~ PROJECT APPROACH SIGNING ~
TWO WAY TRAFFIC

ROAD CLOSURE WITH ONE LANE DIVERSION
LOW VOLUME ROAD WITH ADEQUATE SIGHT DISTANCE

652(13)

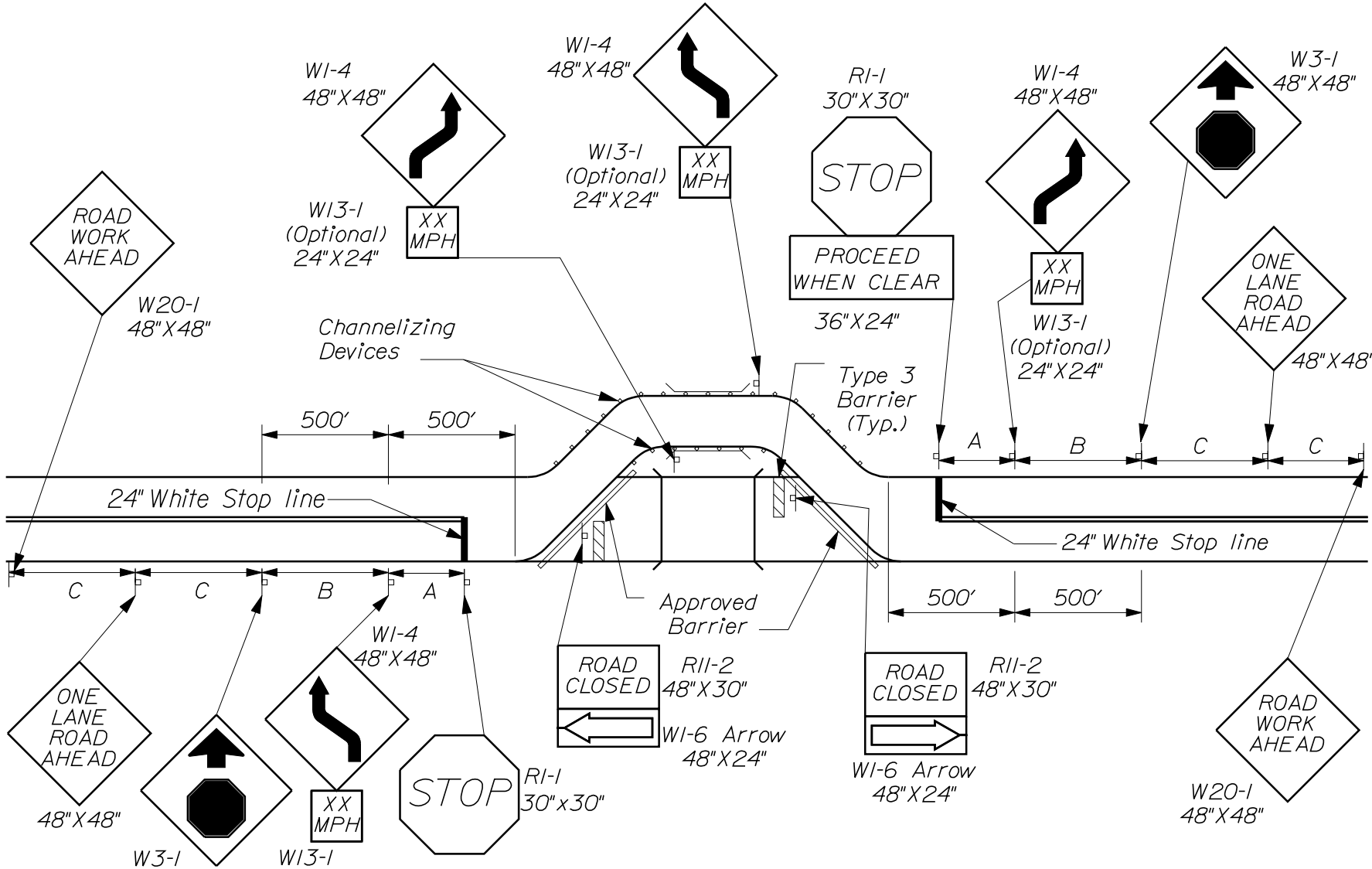

NOTES:

1. Approach signing and end road work signs are required if this work is the construction project.
2. If the tangent distance along the temporary diversion is less than 600 feet, a double reverse curve sign (W24-1) may be used in place of the reverse curve sign (W1-4)
3. Barrier placement shall be in accordance with the current edition of the AASHTO Roadside Design Guide.
4. Terminate the Barrier ends outside the clear zone or protect the ends with an impact attenuator.
5. For A, B, C, Distances see page 652(15).
6. Remove Centerline markings between Stop Lines.

ROAD CLOSURE WITH TWO WAY LANE DIVERSION

652(14)

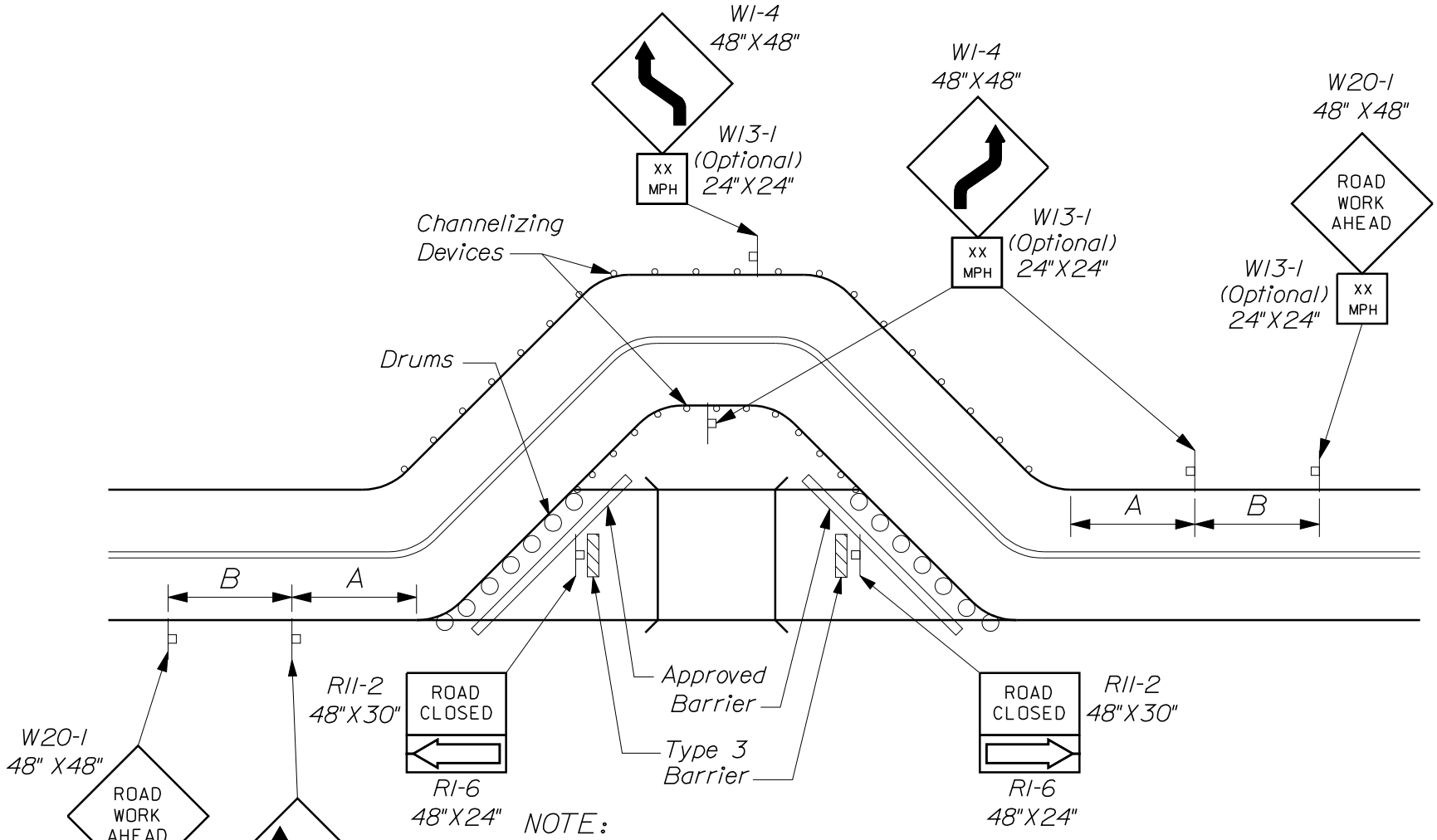

NOTE:

1. If the tangent distance along the temporary diversion is less than 600 feet, a double reverse curve sign (W24-1) may be used in place of the reverse curve sign (W1-4)
2. Barrier placement shall be in accordance with the current edition of the AASHTO Roadside Design Guide.
3. Terminate the Barrier ends outside the clear zone or protect the ends with an impact attenuator.
4. For A, B, C, Distances see page 652(15).

~ TWO WAY TWO LANE DETOUR ~

TYPE OF TAPER	TAPER LENGTH (L)*
Merging Taper	at least L
Shifting Taper	at least 0.5 L
Shoulder Taper	at least 0.33 L
One-Lane, Two-Way Traffic Taper	100 ft maximum
Downstream Taper	100 ft per lane

* Formulas for L are as follows:

For speed limits of 40 mph or less:

$$L = \frac{WS^2}{60}$$

For speed limits of 45 mph or greater:

$$L = WS$$

* Formulas for L are as follows:

A minimum of 5 channelization devices shall be used in the taper.

CHANNELIZATION DEVICE SPACING

The spacing of channelization devices shall not exceed a distance in feet equal to 1.0 times the speed limit in mph when used for taper channelization, and a distance in feet of 2.0 times the speed limit in mph when used for tangent channelization.

SIGN SPACING TABLE

Road Type	Distance Between Signs**		
	A	B	C
Urban 30 mph or less	100	100	100
Urban 35 mph and greater	350	350	350
Rural	500	500	500
Expressway / Urban Parkway	1000	1500	2640

**Distances are shown in feet.

SUGGESTED BUFFER ZONE LENGTHS

Speed (mph)	Length (feet)	Speed (mph)	Length (feet)
20	115	40	325
25	155	45	360
30	200	50	425
35	250	55	495

GENERAL NOTES;

1. Final placement of signs and devices may be changed to fit field conditions as approved by the Resident.

2. Maintain same number of lanes for a shifting taper.

3. Shoulder taper allowed when a minimum of 10 feet can be open from centerline for lane.

CONSTRUCTION TRAFFIC CONTROL

652(15)