DIVISION 500

STRUCTURES

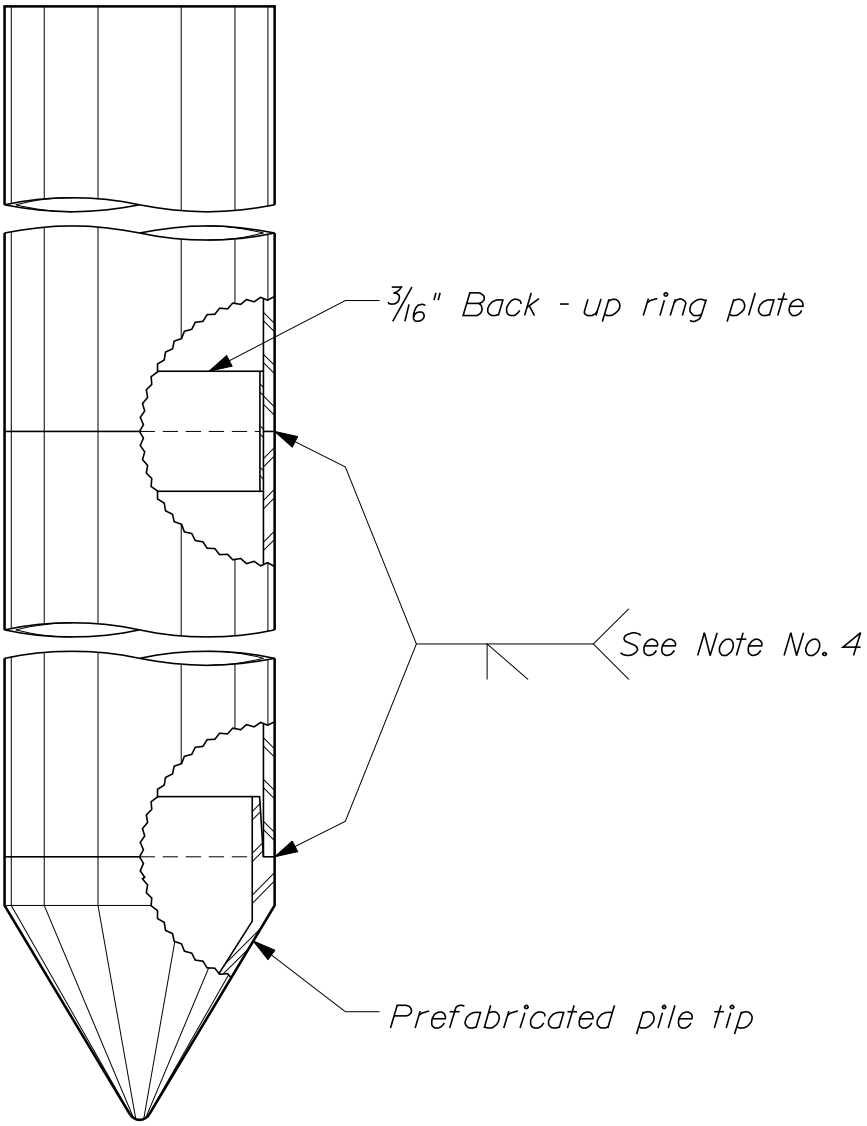

~ PIPE PILE DETAIL ~

NOTES:

1. Pile diameter and wall thickness shall be as indicated on the Design Drawings.

2. Pile tips shall be prefabricated cast steel tips with 60° conical points and internal flanges. Pile tips shall be approved by the Engineer.

3. Prefabricated internal splicer sleeves may be used if approved by the Engineer.

4. Refer to "Pipe Pile Splice" details for welding procedures.

PIPE PILES

501(01)

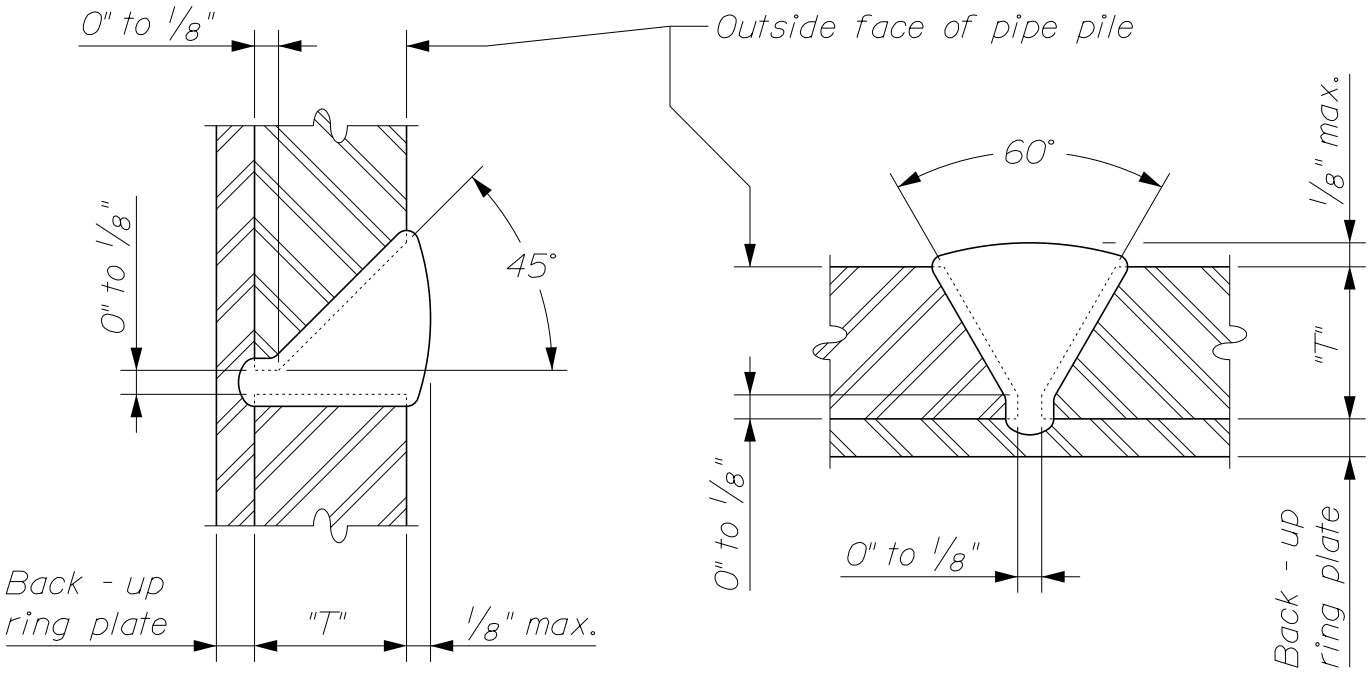

~ VERTICAL POSTION ~ ~ HORIZONTAL POSITION ~

TABLE OF WELD SIZES	
Base Metal Thickness "T"	Minimum Number of Passes
3/8", 7/16"	3
1/2", 9/16", 5/8"	4
11/16", 3/4", 13/16"	5

NOTES:

1. All cutting shall be done with the use of a mechanical guide.

2. Electrodes shall be dry when used, in accordance with A.W.S. Specification D1.5, as amended by AASHTO.

PIPE PILE SPLICE

501(02)

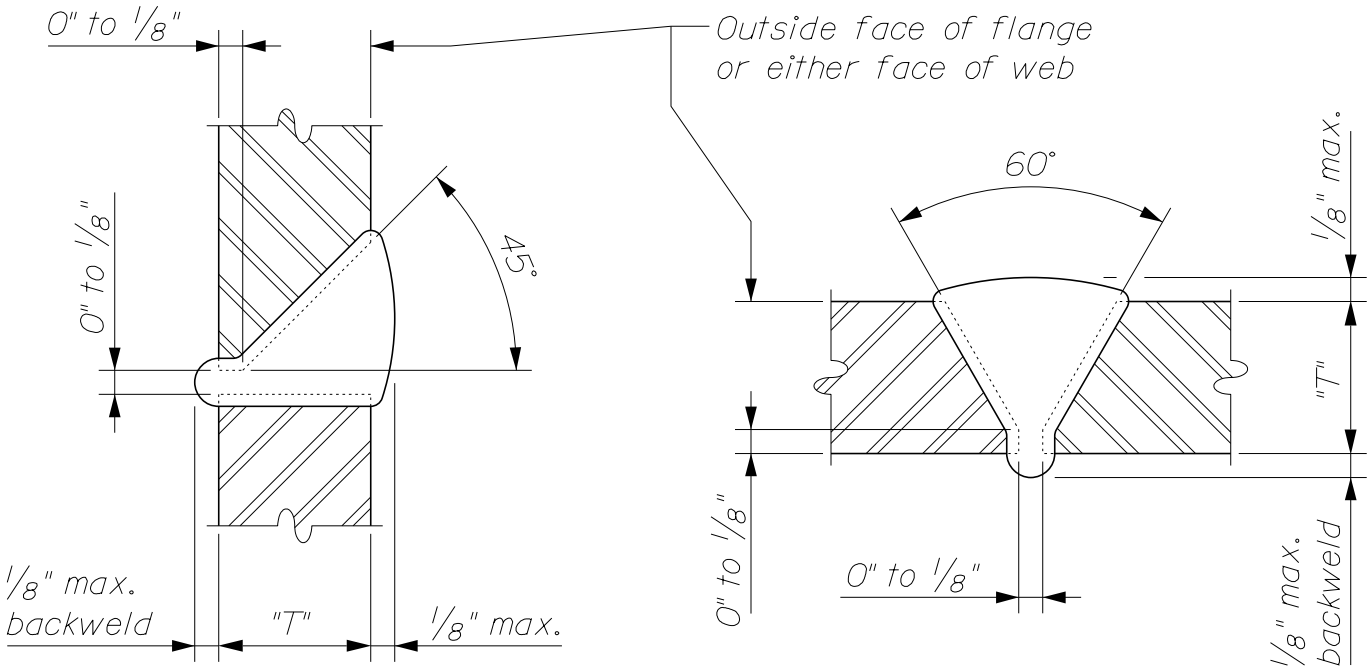

~ VERTICAL POSTION ~ ~ HORIZONTAL POSITION ~

TABLE OF WELD SIZES	
Base Metal Thickness "T"	Minimum Number of Passes
3/8", 7/16"	3
1/2", 9/16", 5/8"	4
11/16", 3/4", 13/16"	5

NOTES:

1. All cutting shall be done with the use of a mechanical guide.

2. Electrodes shall be dry when used, in accordance with A.W.S. Specification D1.5, as amended by AASHTO.

3. Gouge root before welding the second side.

H - PILE SPLICE

501(03)

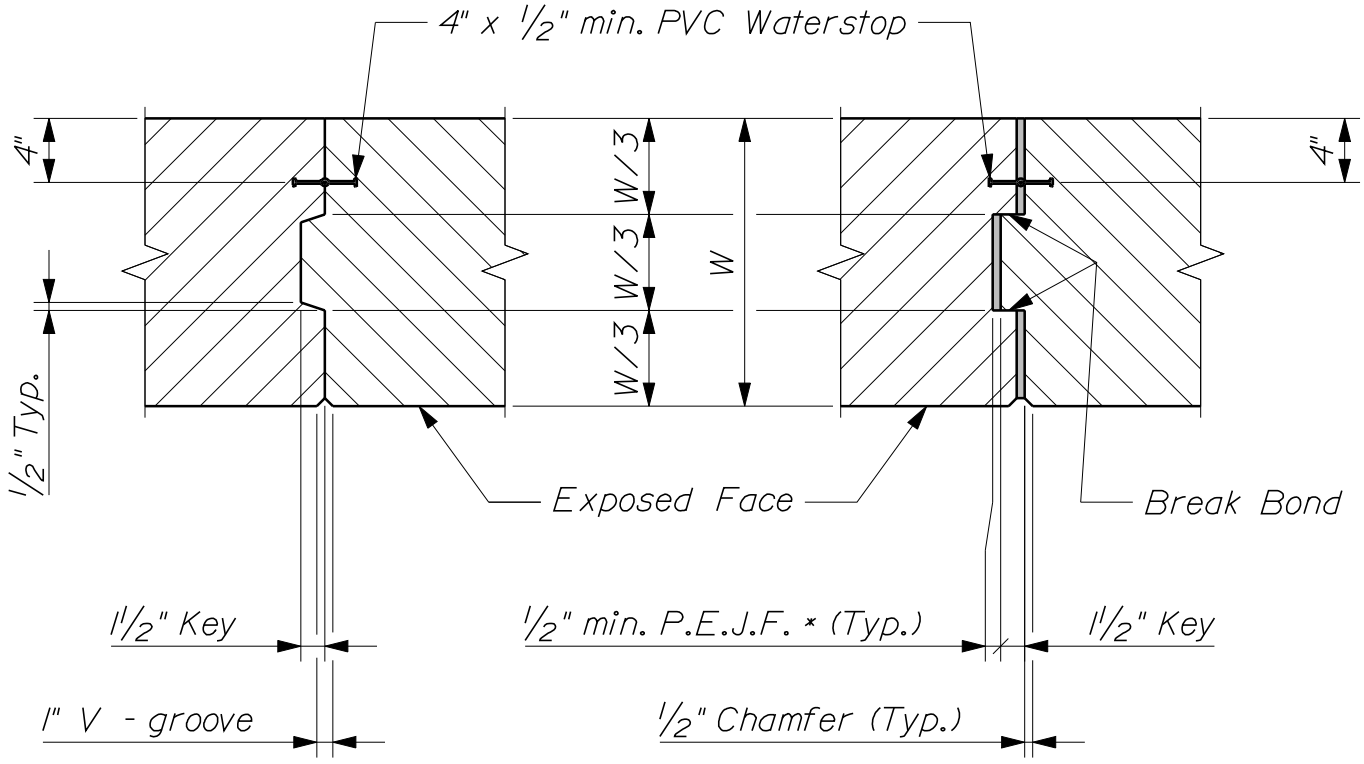

~ VERTICAL CONSTRUCTION OR CONTRACTION JOINT ~

~ VERTICAL EXPANSION JOINT ~

* Preformed Expansion Joint Filler

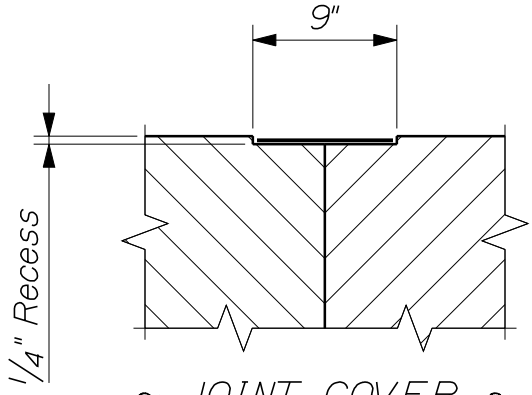

~ JOINT COVER ~

Apply 2 layers of heavy roofing felt using plastic roofing cement, or apply 1 layer of membrane waterproofing in accordance with Section 508 of the Standard Specifications. Recess the area to be covered unless otherwise indicated on the plans. Use where PVC waterstops cannnot be used and on horizontal joints where there is potential for leakage through the wall.

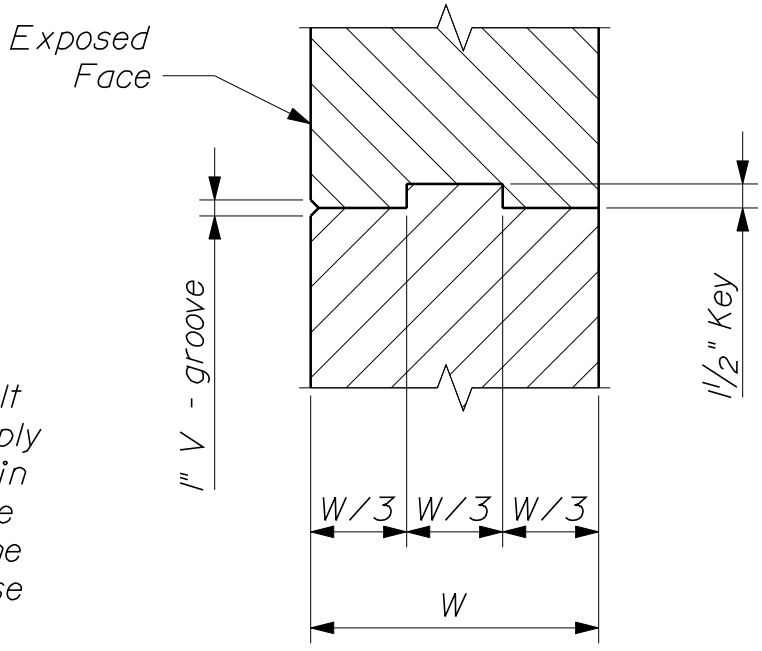

~ HORIZONTAL CONSTRUCTION JOINT ~

CONCRETE JOINTS

502(01)

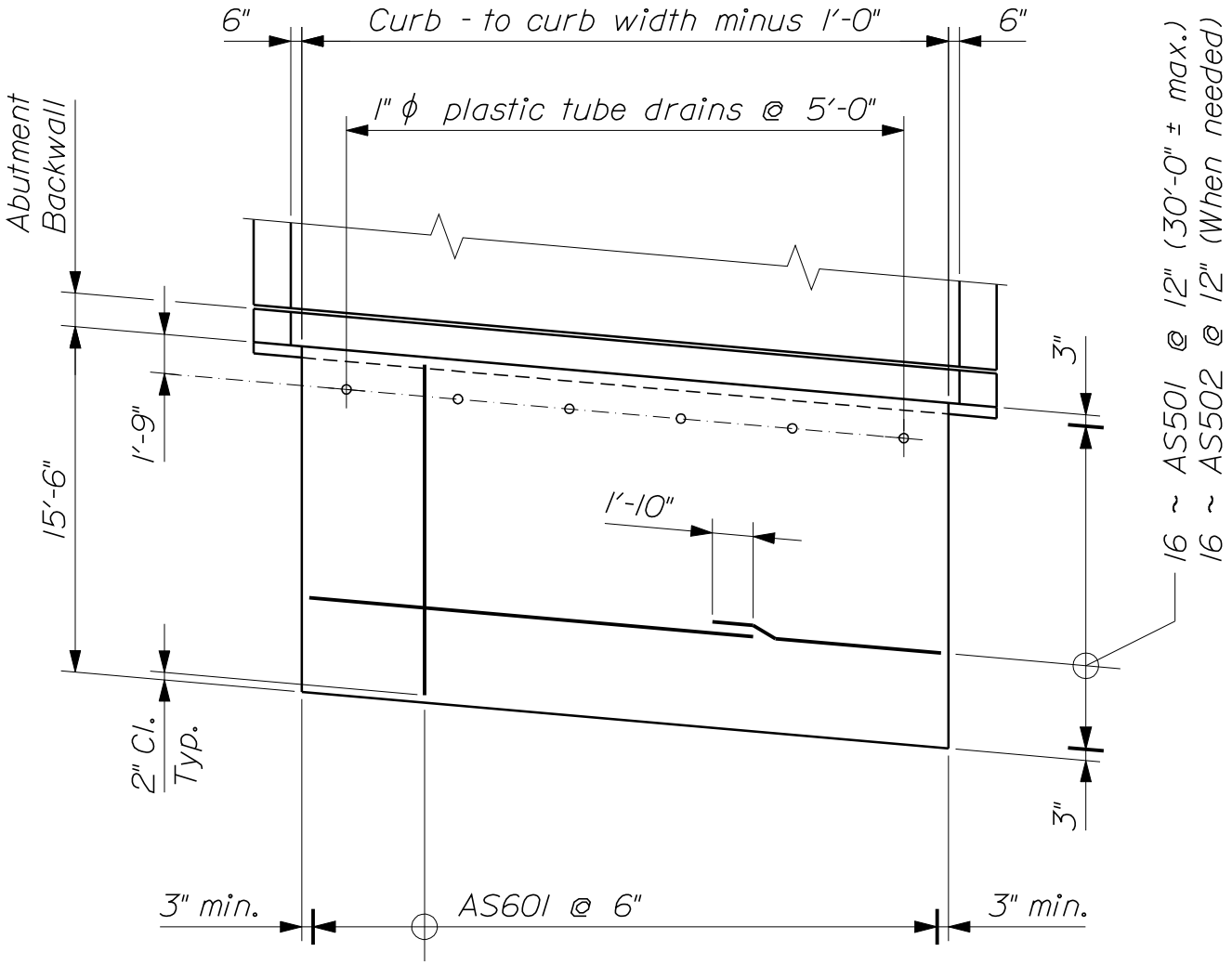

~ PLAN ~

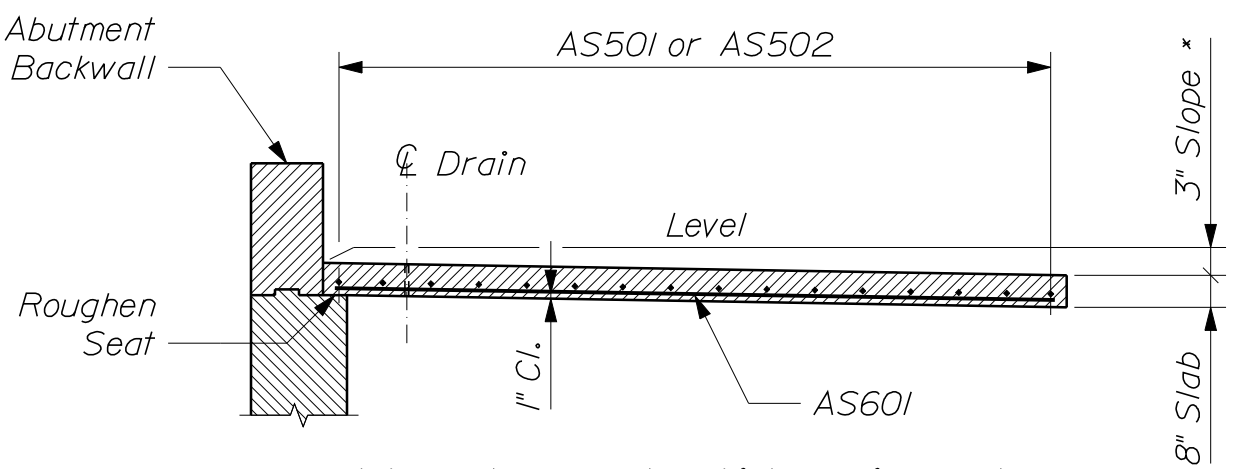

* or match roadway grade, whichever is greater

~ SECTION ~

CONCRETE APPROACH SLAB

502(02)

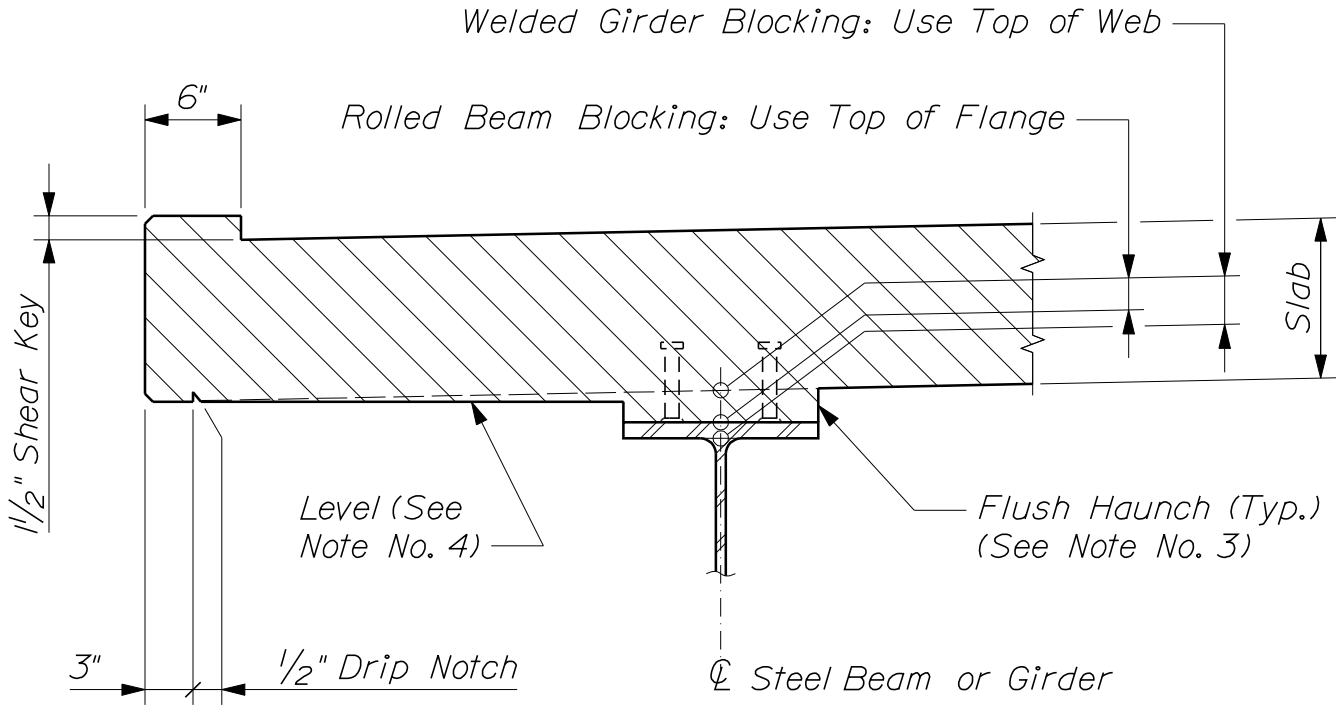

~ SLAB DETAILS ~

NOTES:

1. Shear key and drip notch details are typical for all superstructure designs.

2. Blocking dimensions for construction shall be determined using the "Bottom of Slab Elevations" table shown on the Design Drawings. Theoretical Blocking will be given for reference purposes only. Do not use Theoretical Blocking for setting formwork.

3. Blocking on all beams shall be formed using the flush haunch detail shown.

4. On curved superelevated structures, where the distance between the exterior beam and the fascia varies over the length of the deck, the bottom of the slab overhang shall follow the superelevation cross - slope.

COMPOSITE CONCRETE SUPERSTRUCTURE SLAB

502(03)

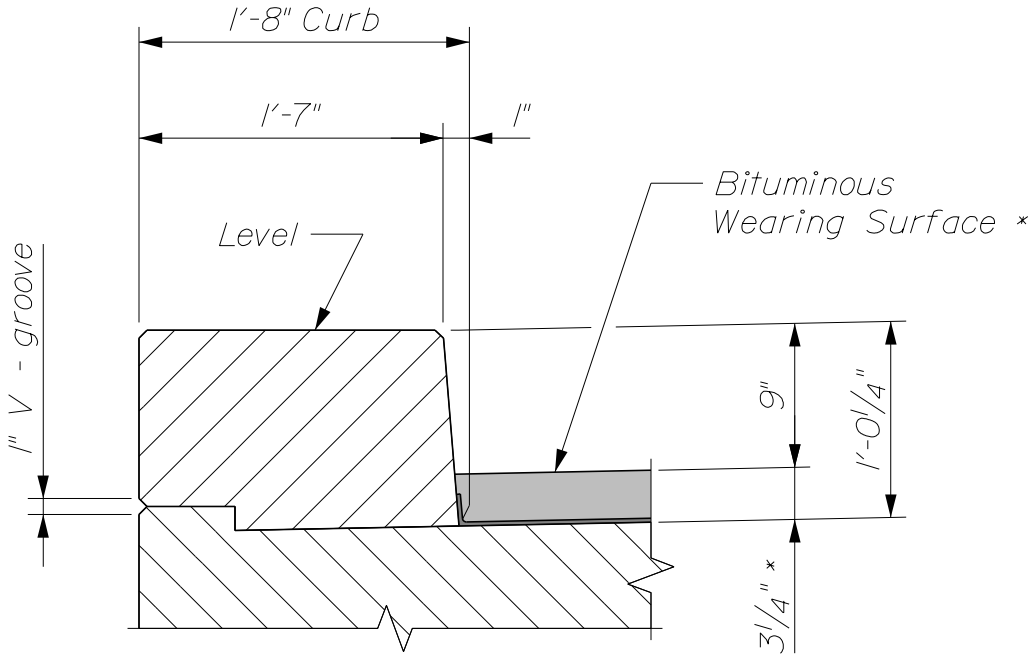

~ CURB WITH BITUMINOUS WEARING SURFACE ~

* 3" Hot Mix Asphalt + 1/4" (nom.) High Performance Waterproofing Membrane

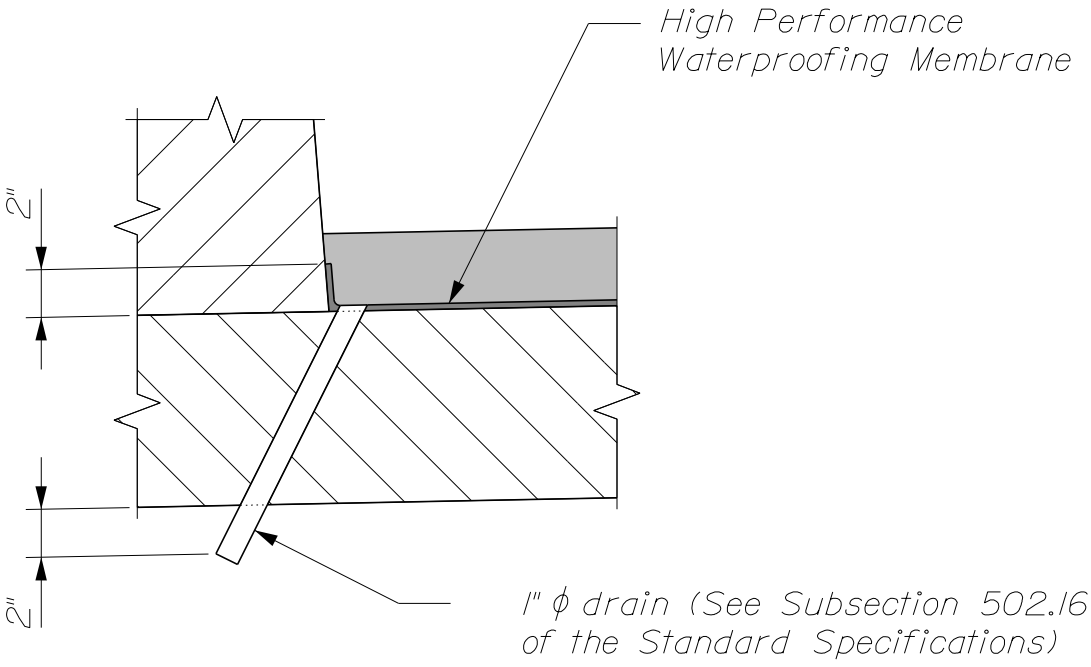

~ GUTTER DETAIL FOR BITUMINOUS W. S. ~

CONCRETE CURB

502(04)

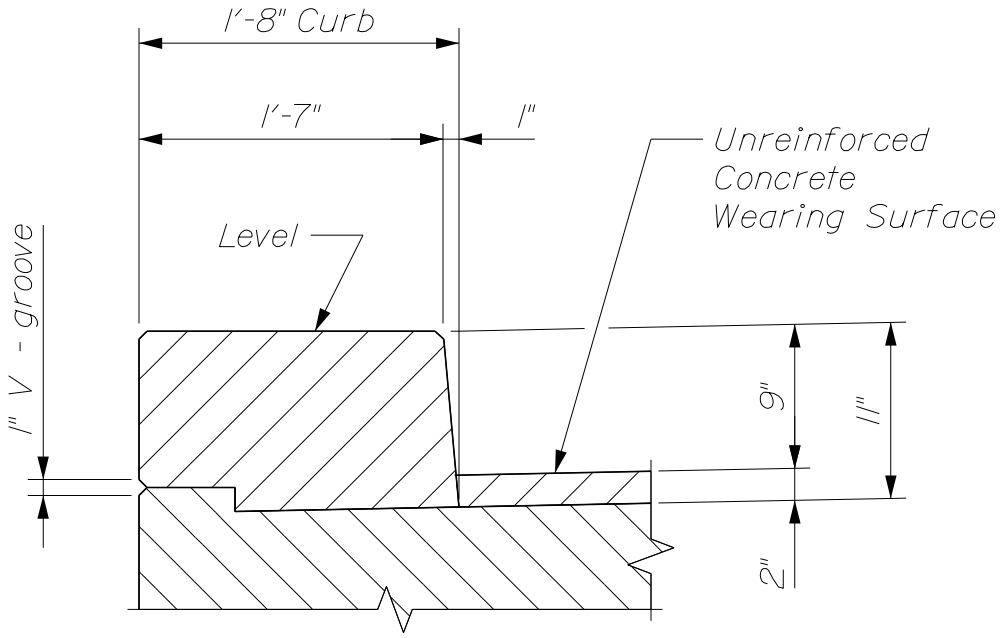

-- CURB WITH CONCRETE WEARING SURFACE --

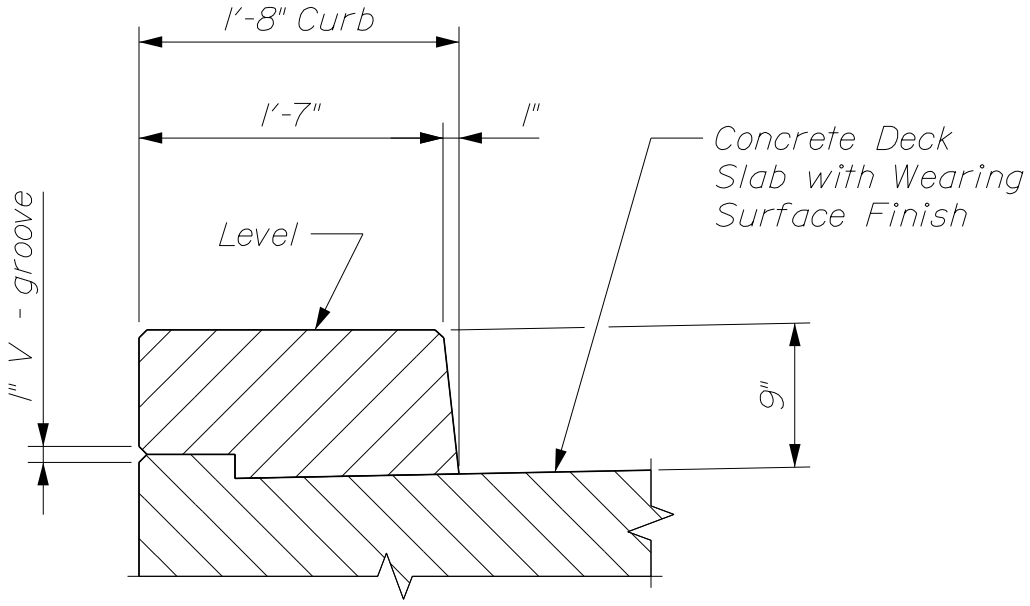

-- CURB WITH INTEGRAL WEARING SURFACE --

CONCRETE CURB

502(05)

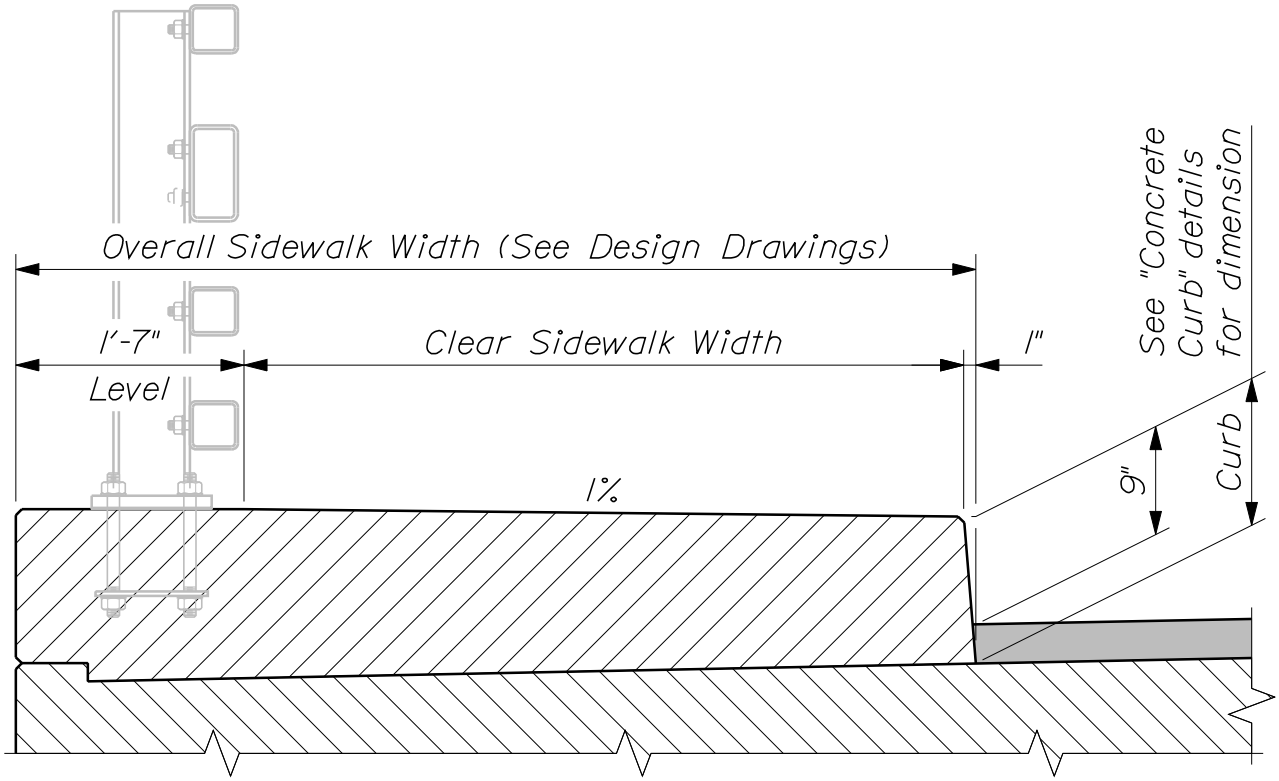

~ WITH STEEL BRIDGE RAILING ~

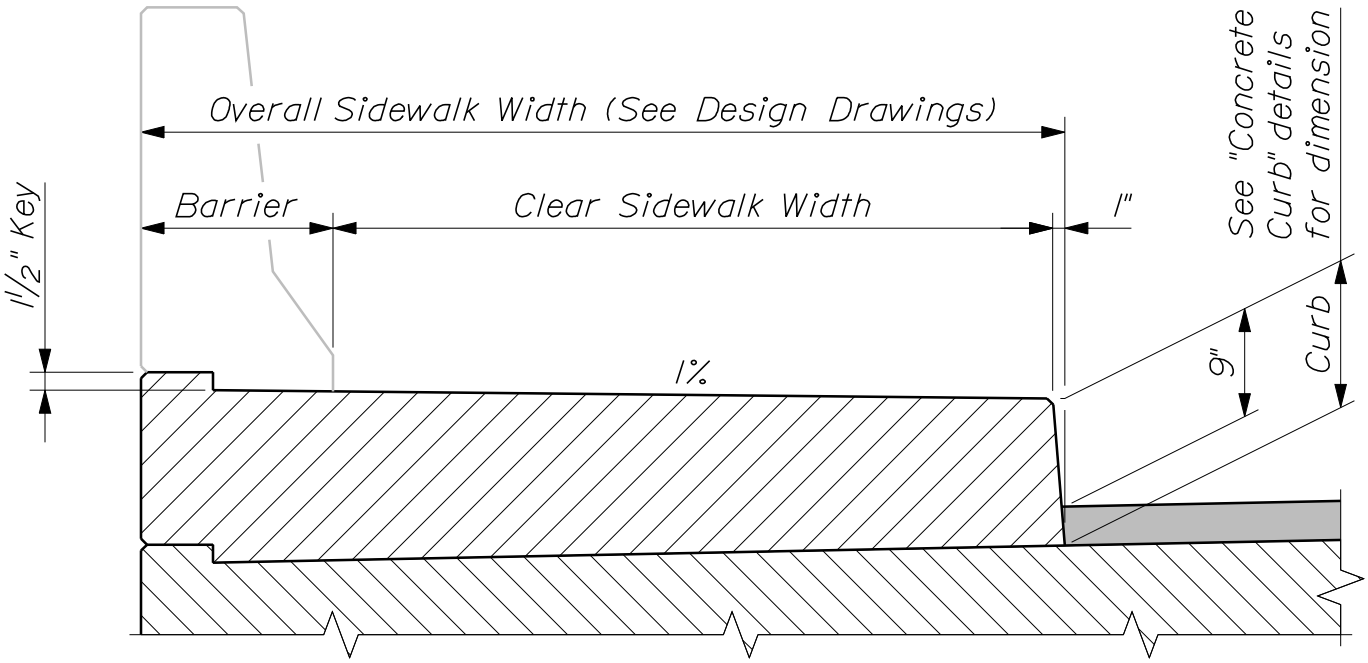

~ WITH PERMANENT CONCRETE BARRIER ~

CONCRETE SIDEWALK ON BRIDGES

502(06)

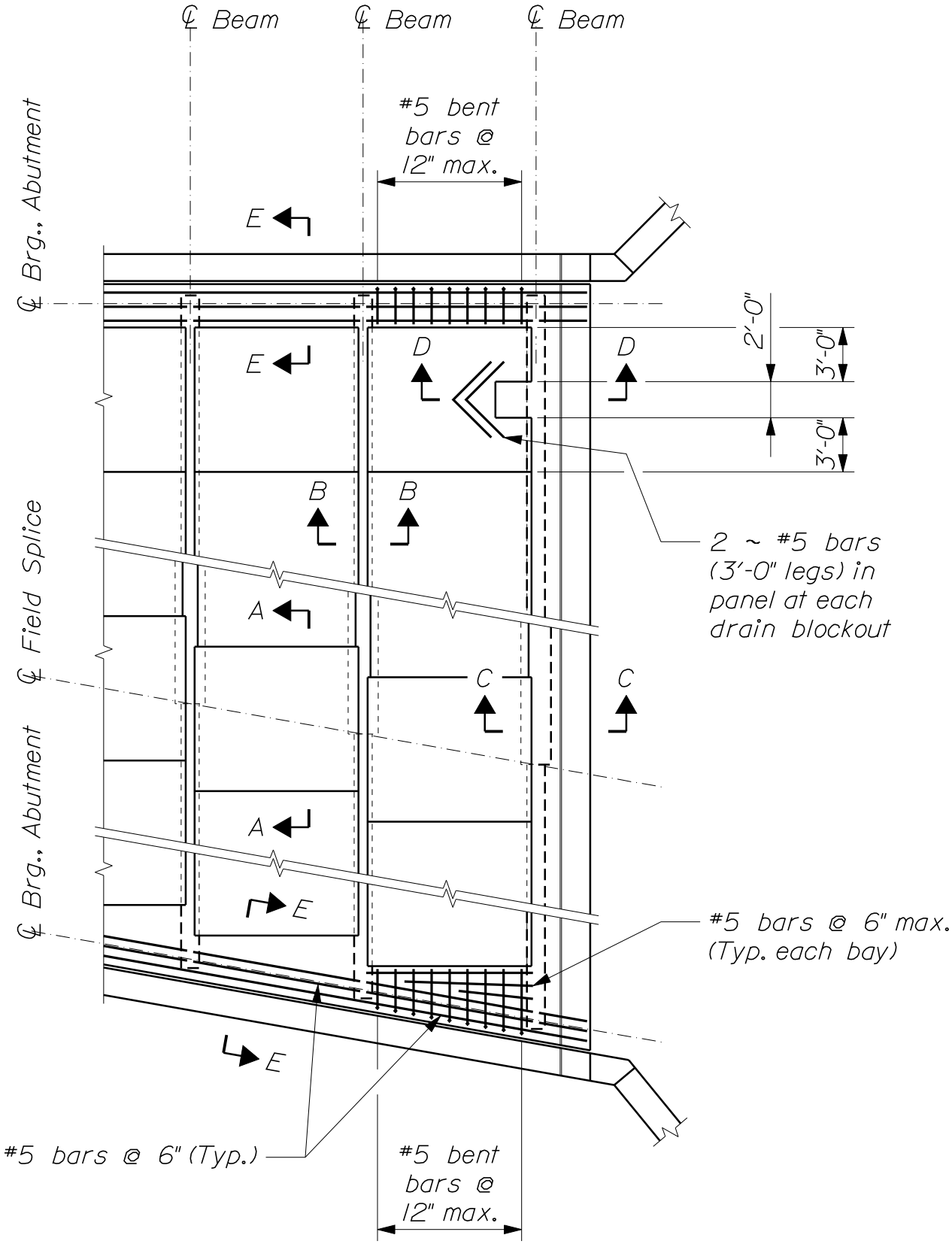

~ LAYOUT PLAN (Cantilevered Abutments) ~

PRECAST CONCRETE DECK PANELS

502(07)

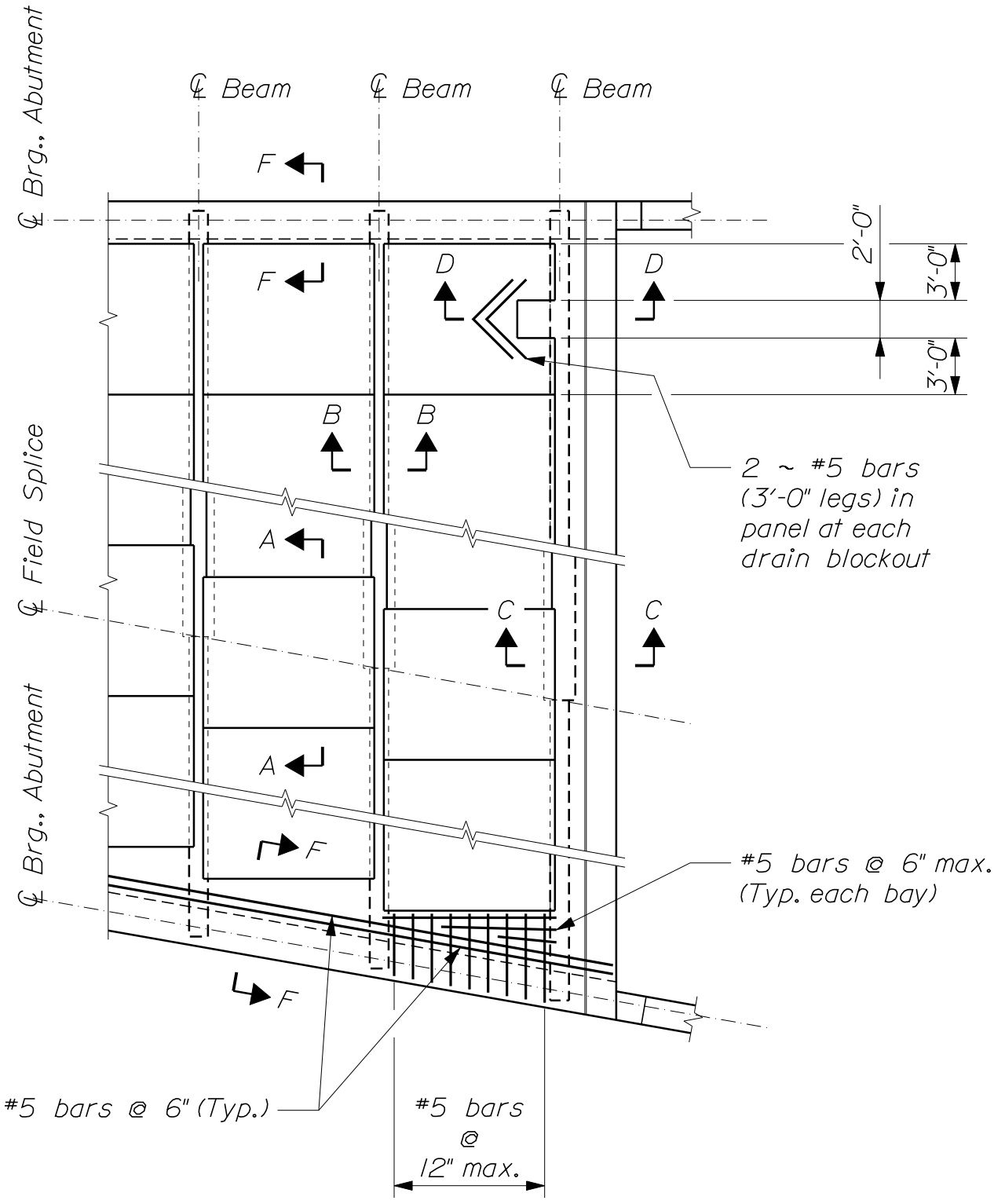

~ LAYOUT PLAN (Integral Abutments) ~

PRECAST CONCRETE DECK PANELS

502(08)

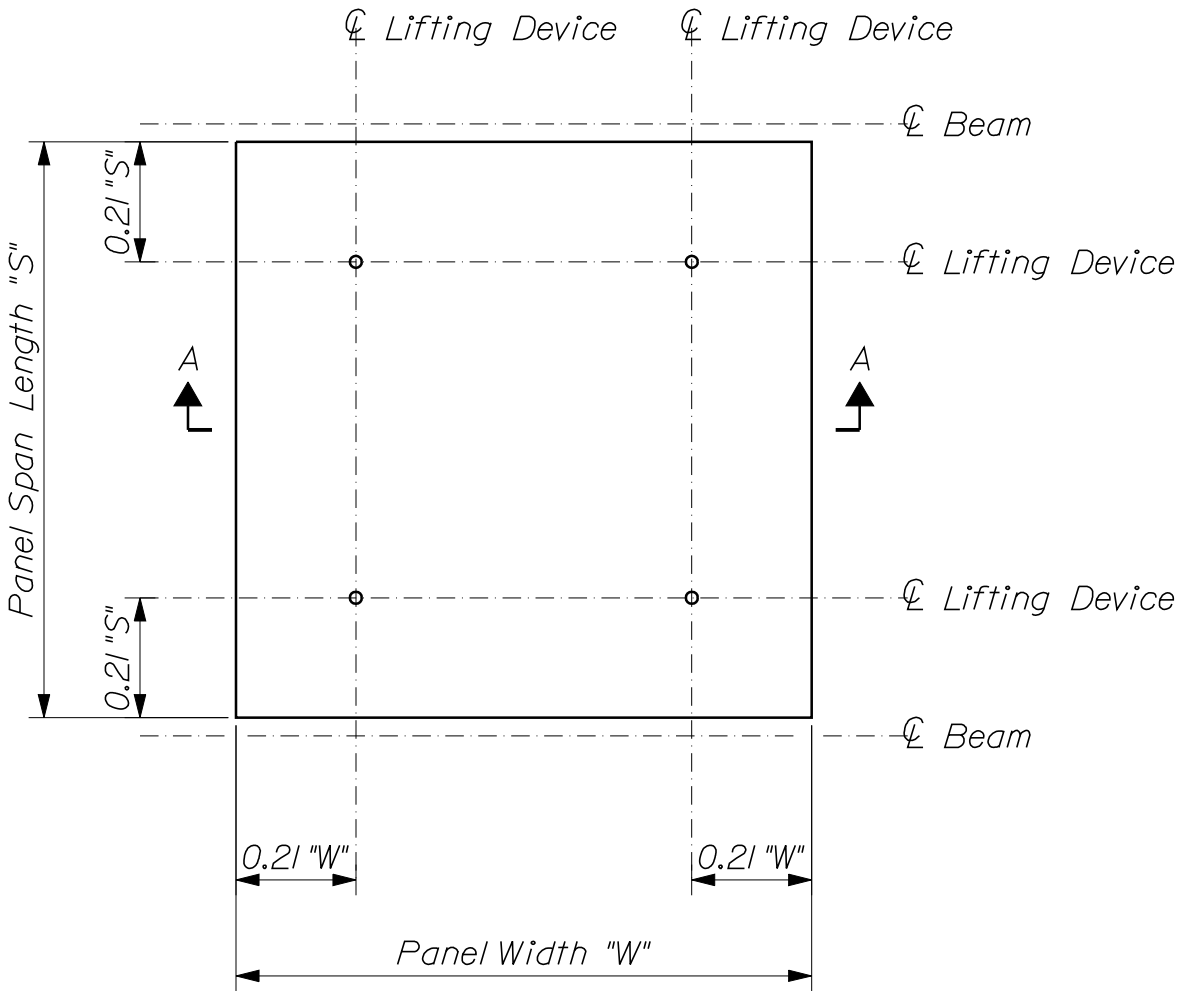

~ PRECAST PANEL PLAN ~

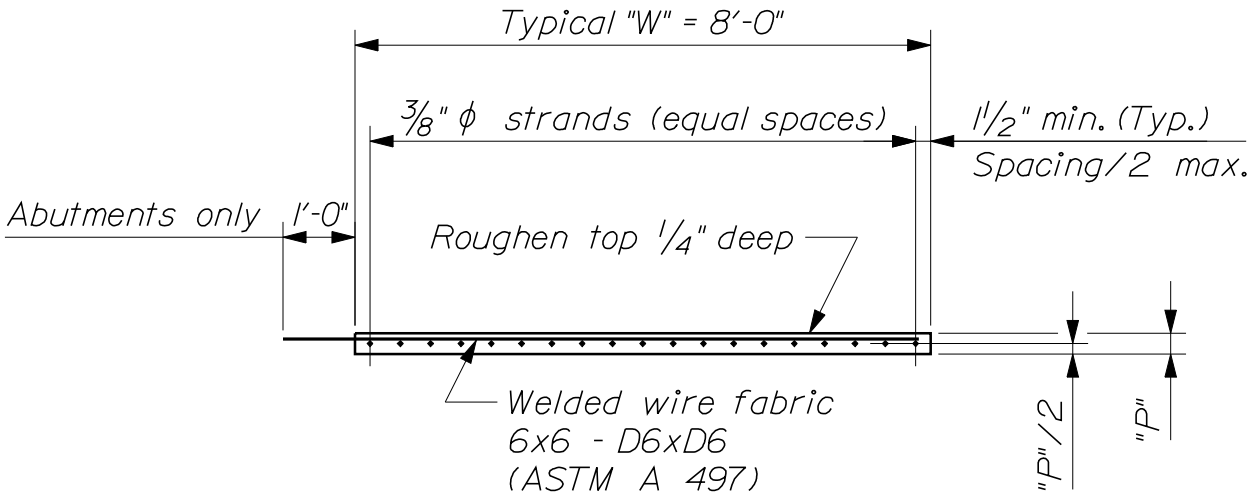

~ SECTION A-A ~

PRECAST CONCRETE DECK PANELS

502(09)

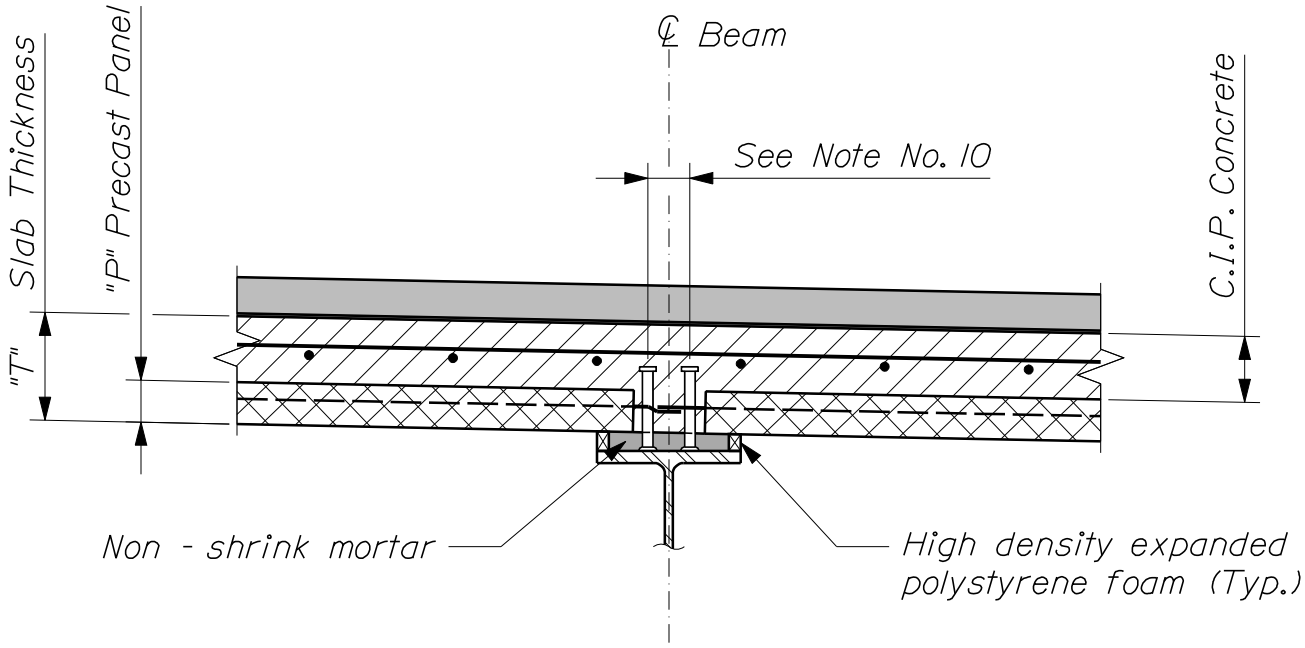

~ SECTION B-B ~

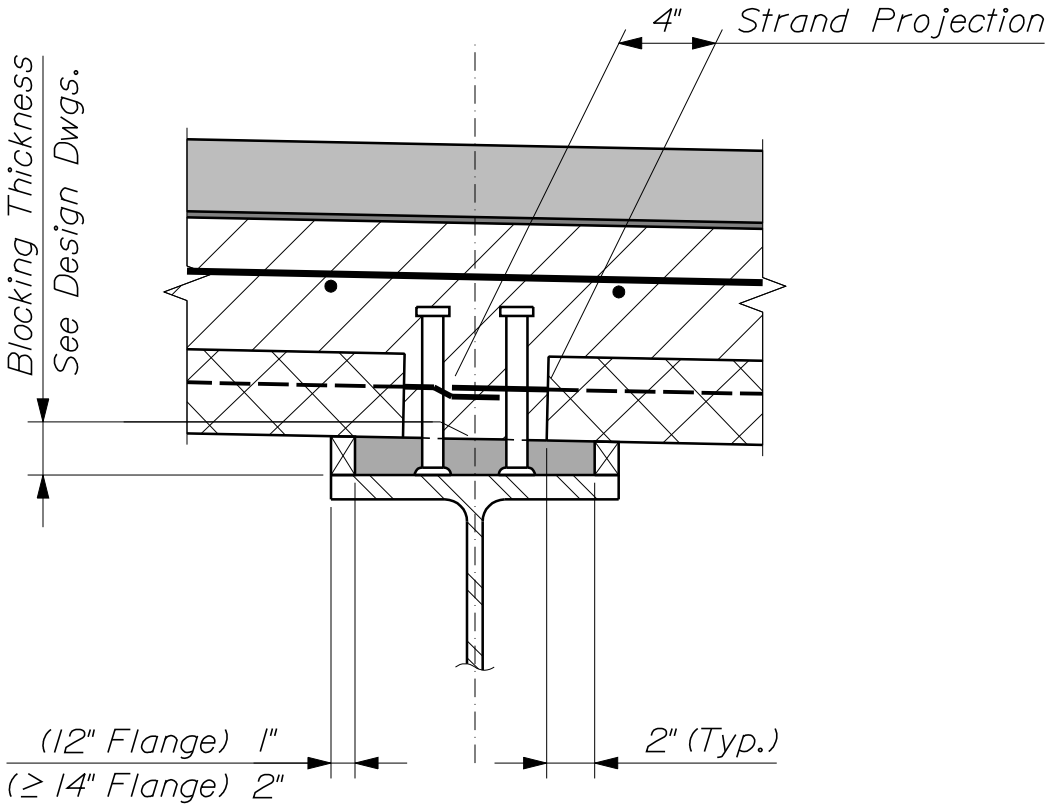

~ BLOCKING DETAIL ~

PRECAST CONCRETE DECK PANELS

502(10)

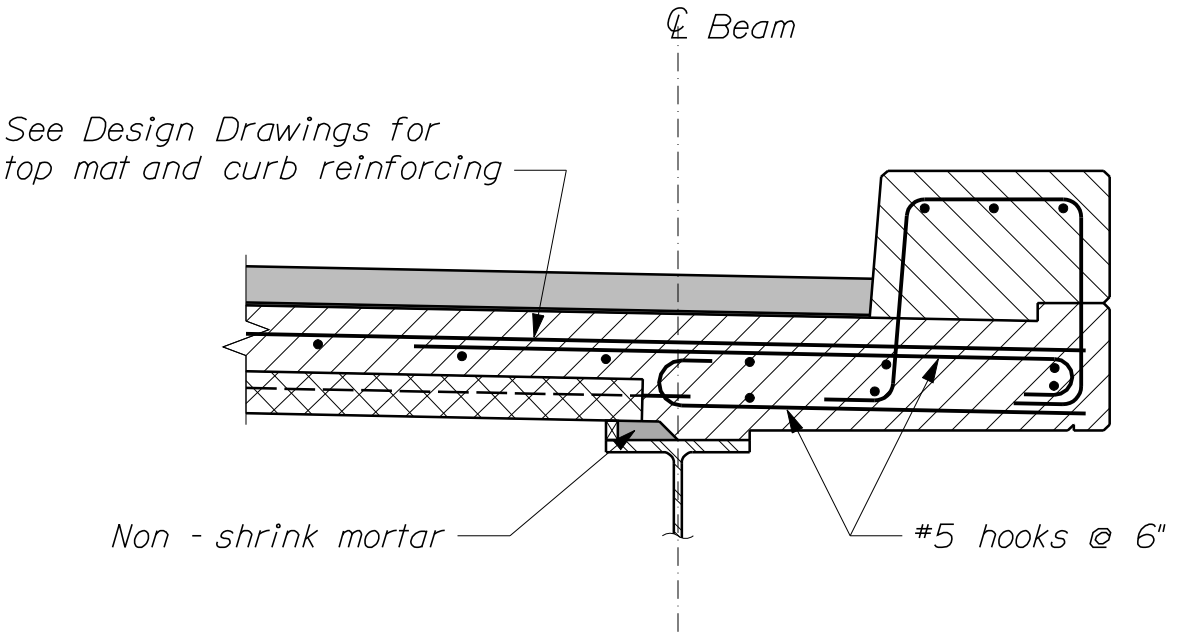

~ SECTION C-C ~

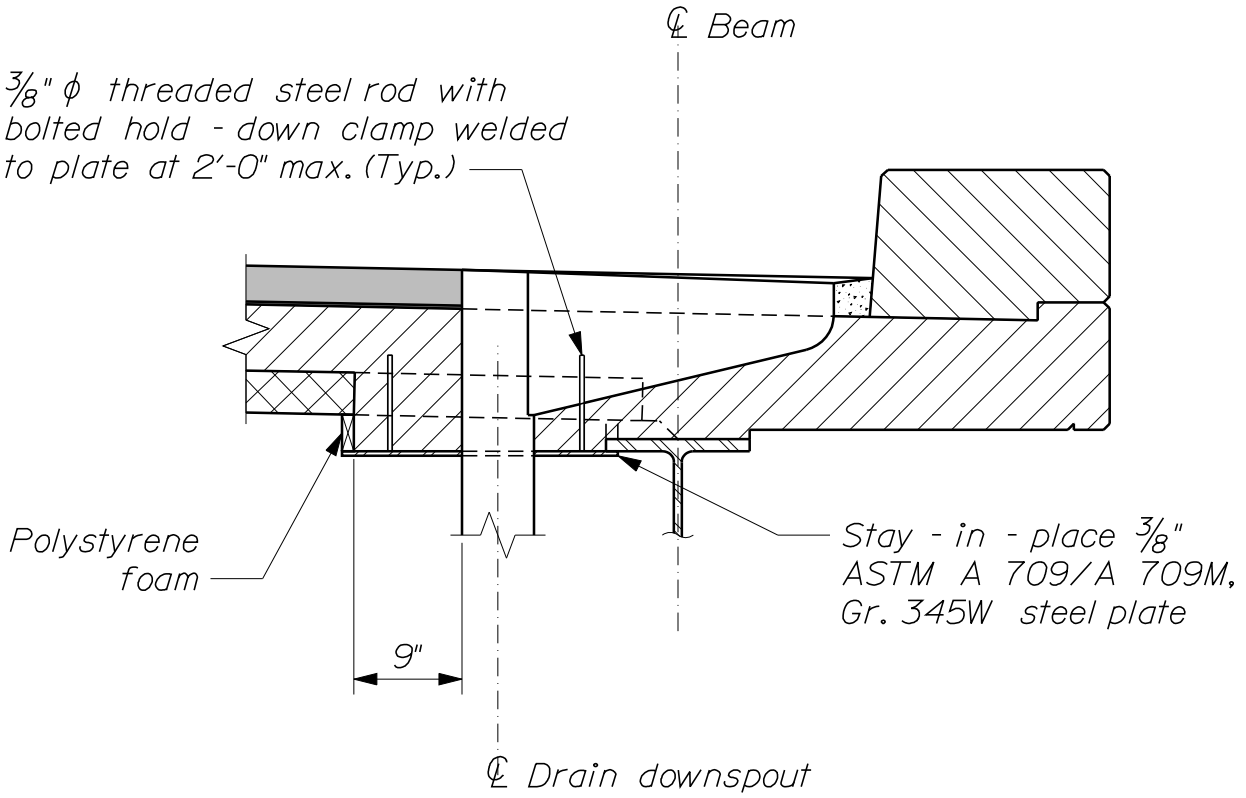

~ SECTION D-D ~

PRECAST CONCRETE DECK PANELS

502(11)

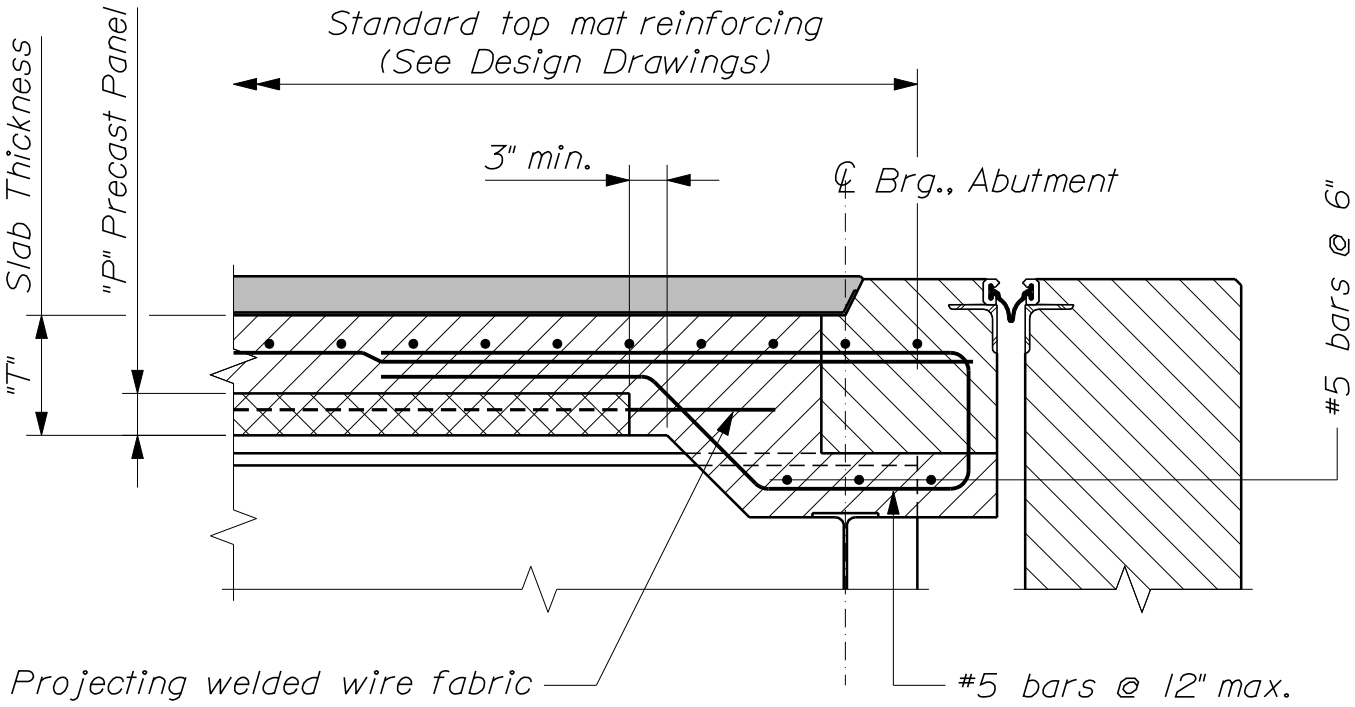

~ SECTION E-E (Cantilevered Abutment) ~

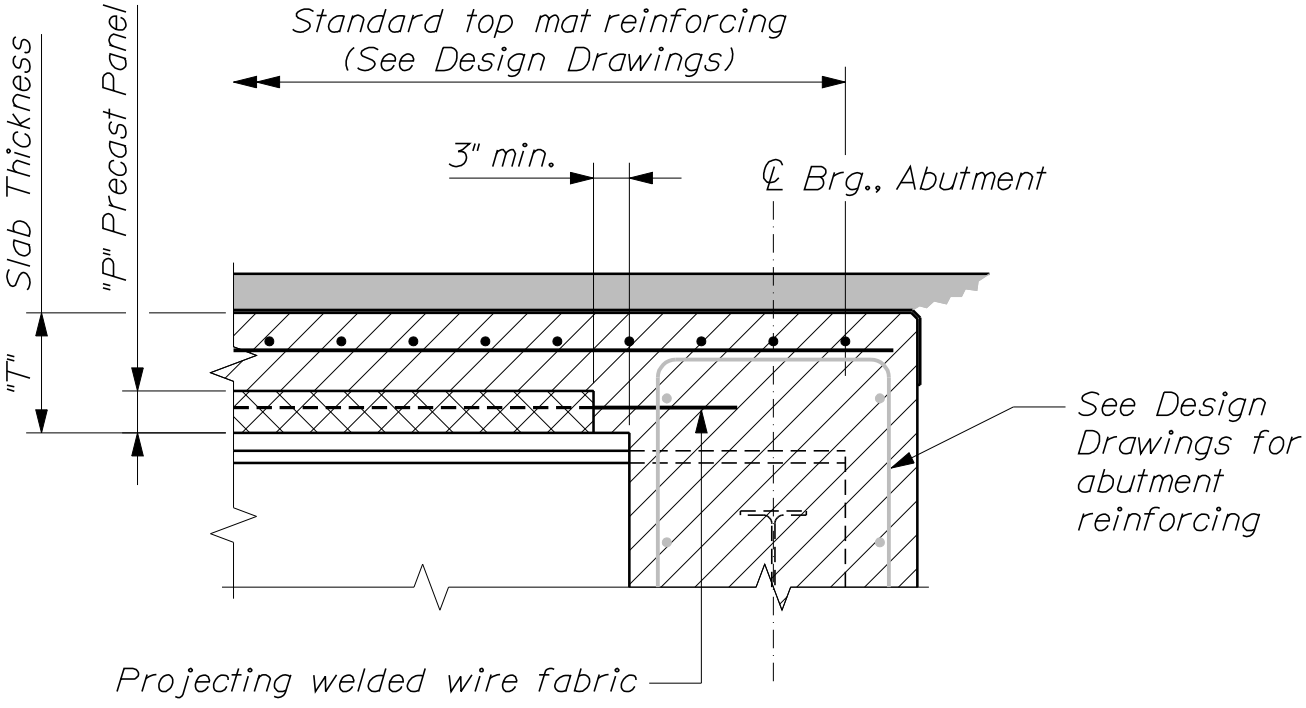

~ SECTION F-F (Integral Abutment) ~

PRECAST CONCRETE DECK PANELS

502(12)

PRECAST PANELS ON STEEL GIRDERS						
Panel Type	Maximum Girder Spacing	Slab "T"	Panel "P"	Number of Strands		
				Flange Width		
				1'-0"	≤ 1'-6"	≤ 2'-0"
A1	7'-6"	8"	3½"	15	15	15
A2	8'-0"	8"	3½"	15	15	15
A3	8'-6"	8"	3½"	17	16	16
A4	9'-0"	8"	3½"	19	17	17
A	9'-6"	8"	3½"	21	19	18
B	10'-0"	8½"	3½"	22	21	19
C	10'-6"	9"	3½"	24	22	20
D	11'-0"	9½"	3½"	27	24	22
E	11'-6"	10"	3½"	30	27	25
F	12'-0"	10½"	3½"	33	30	28

NOTES:

1. Precast Concrete Deck Panels shall be fabricated in accordance with Section 535 of the Standard Specifications.

2. The contractor shall submit working drawings showing the exact layout of panel types and sizes.

3. Refer to the Design Drawings for structures with curved beams or angled splices.

4. Joints at expansion piers shall be treated similarly to the abutment joint details.

5. Panel widths of less than 8'-0" may be used. Provide strands in the ratio of the smaller panel width to 8'-0", multiplied by the number of strands given in the table, rounding up to the next even number of strands. The minimum panel width is 3'-0"

6. Prestressing strands shall be ⅜-in. diameter Grade 270 seven - wire low relaxation strands conforming to the requirements of ASTM A 416. Initial tension shall be 17.2 kips per strand.

(Continued)

NOTES (Continued):

7. A mat of #3 reinforcing bars spaced at 6 inches O.C. in each direction may be substituted for welded wire fabric. The welded wire fabric or the reinforcing bars shall have the same corrosion resistance characteristics and/or coating system as the reinforcing steel used in the cast - in - place portion of the deck slab.

8. Concrete for panels shall have a minimum 28 day compressive strength of 5000 psi and a minimum release strength of 4000 psi. Permeability shall be as required for the cast - in - place portion of the deck slab.

9. Precast deck panels require the use of 7-in. long shear connectors rather than the standard 5-in. length. Payment for any additional costs will be considered incidental to the precast deck panel pay item.

10. Where 1'-0" wide girder flanges are specified on the Design Drawings, the transverse shear connector spacing shall be 3½ inches rather than the standard 6-in. spacing.

11. When flange thicknesses differ or flange cover plates are used, the temporary blocking thickness shall vary. Precast panels shall align vertically to within ¼ inch.

12. High - density expanded polystyrene foam shall be cut in the field to the required thickness.

13. Mortar to be used for support under the deck panels shall have an approved high range water reducing additive.

14. The specific reinforcing steel layout for the cast - in - place portions of the slab shall be as shown on the Design Drawings.

15. If there is a conflict between these Standard Details and the Design Drawings, the requirements of the Design Drawings shall be followed.

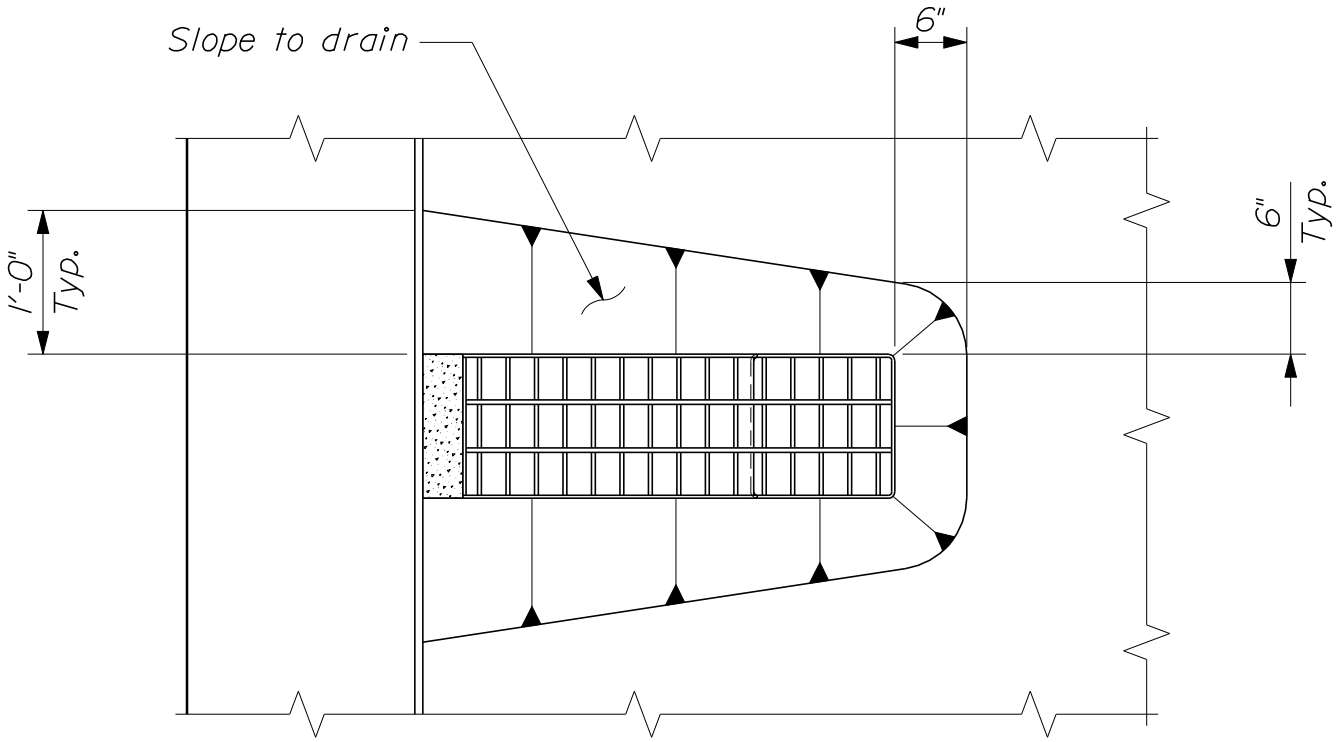

~ BRIDGE DRAIN TYPE "A1" OR "A2" PLAN ~

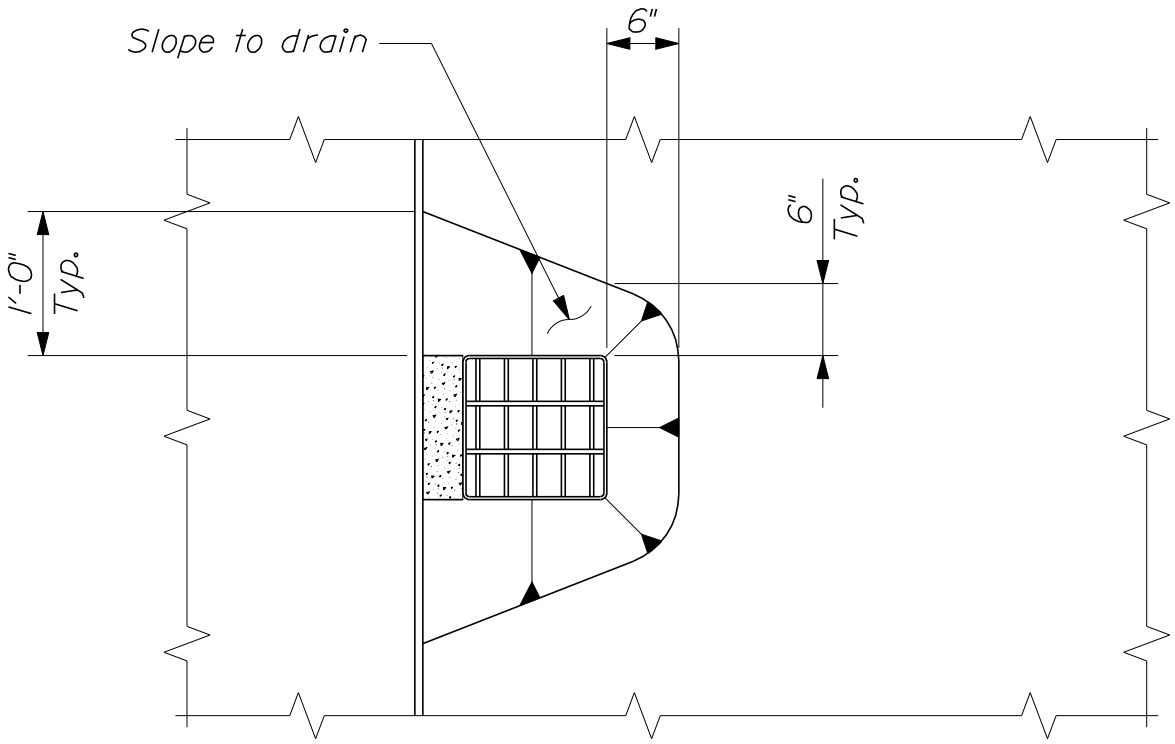

~ BRIDGE DRAIN TYPE "B" OR "C" PLAN ~

BRIDGE DRAINS

502(15)

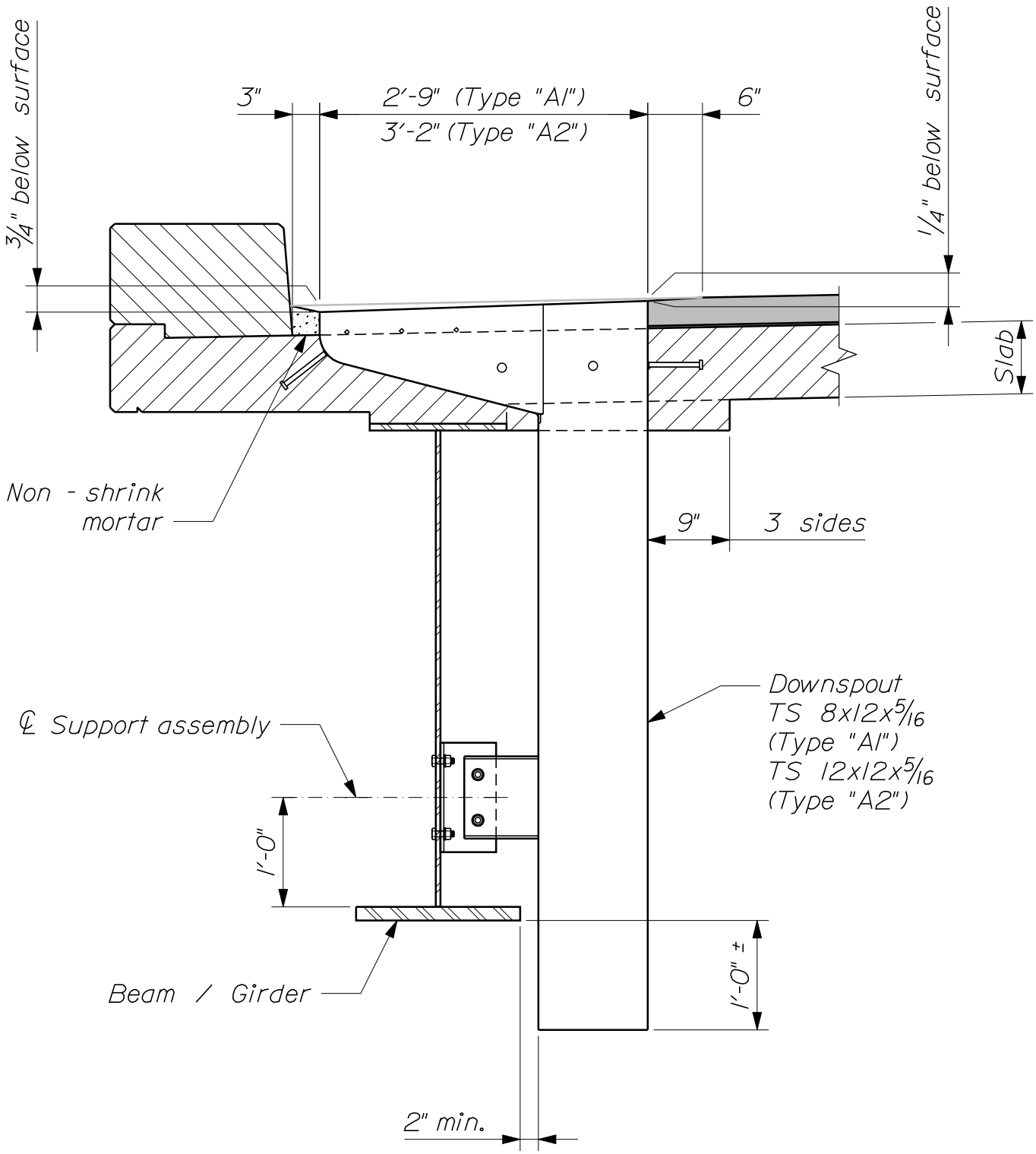

~ BRIDGE DRAIN TYPE "A1" OR "A2" ELEVATION ~

BRIDGE DRAINS

502(16)

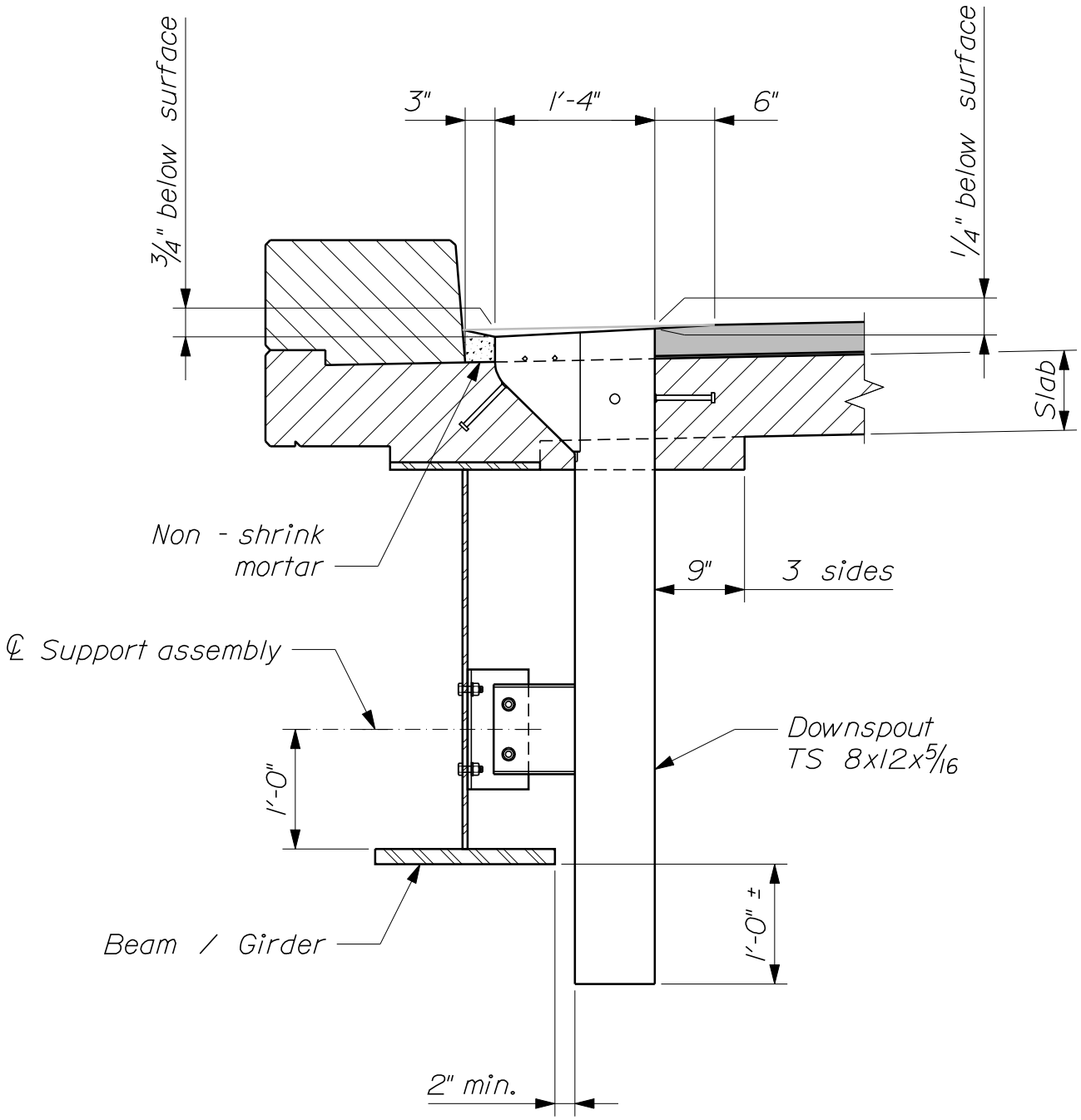

~ BRIDGE DRAIN TYPE "B" ELEVATION ~

BRIDGE DRAINS

502(17)

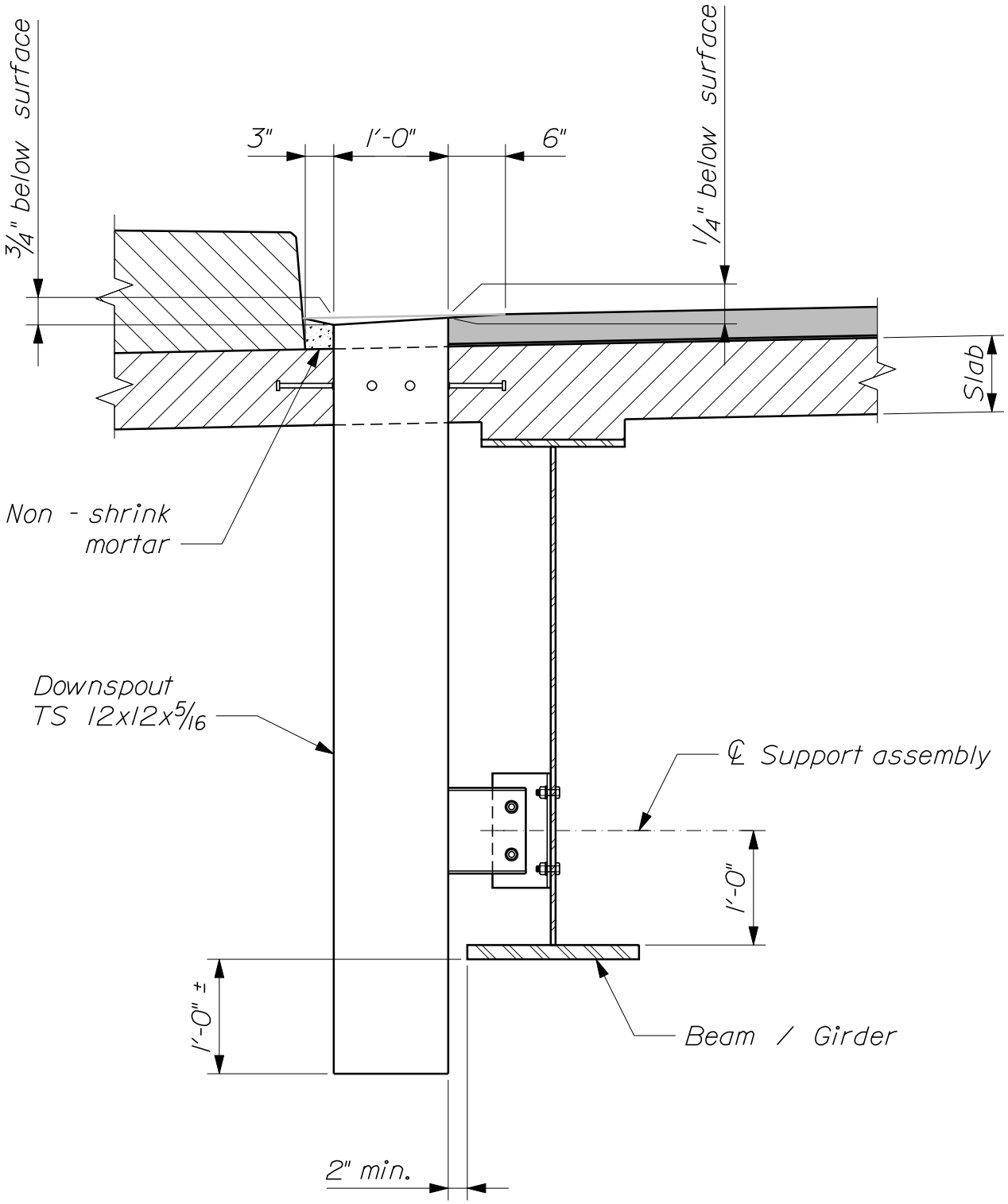

~ BRIDGE DRAIN TYPE "C" ELEVATION ~

BRIDGE DRAINS

502(18)

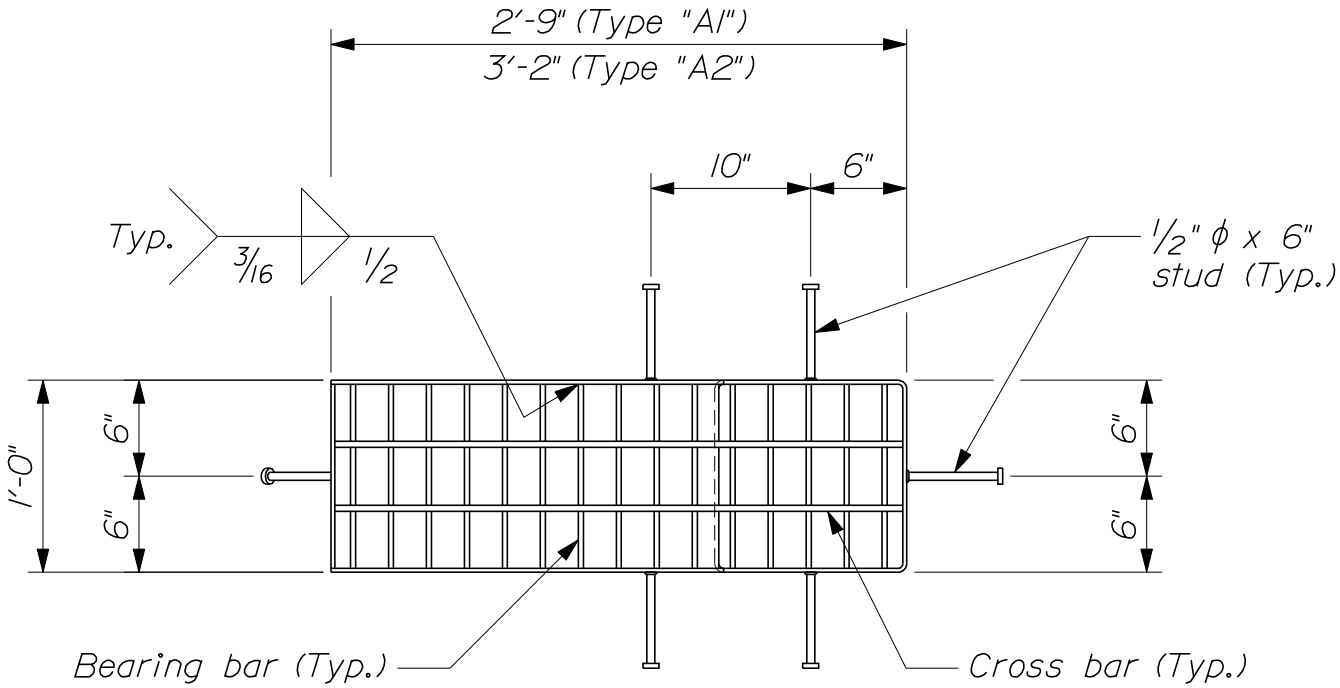

~ DRAIN TYPE "A1" OR "A2" TOP VIEW ~

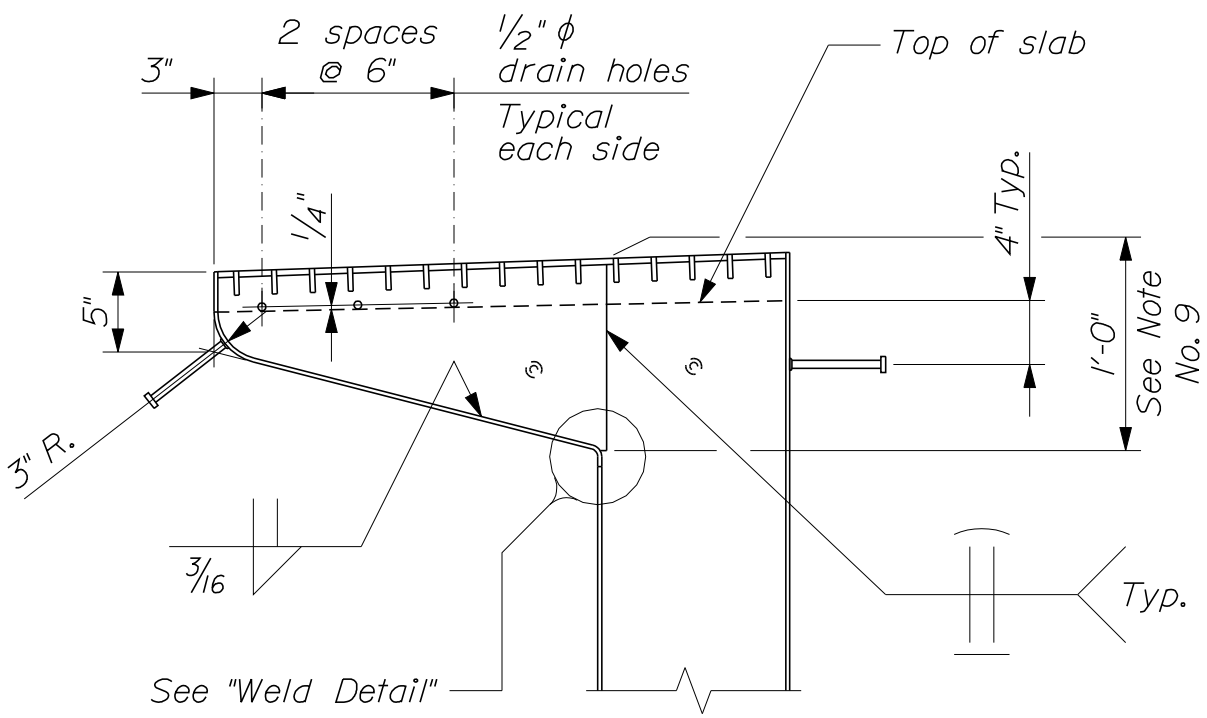

~ DRAIN TYPE "A1" OR "A2" SECTION ~

BRIDGE DRAINS

502(19)

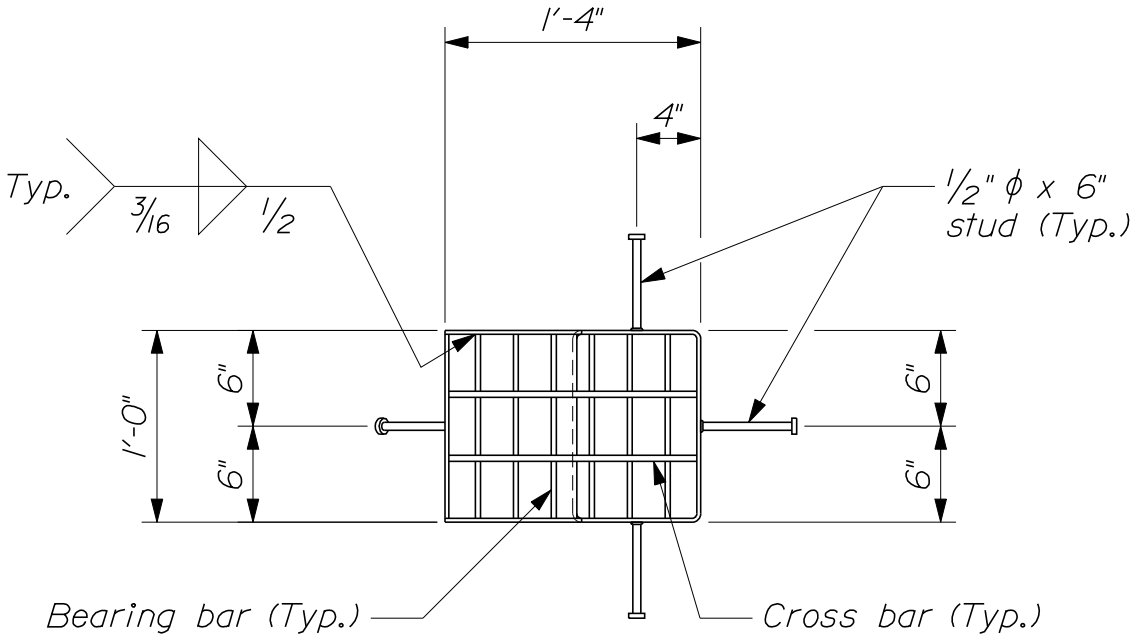

~ DRAIN TYPE "B" TOP VIEW ~

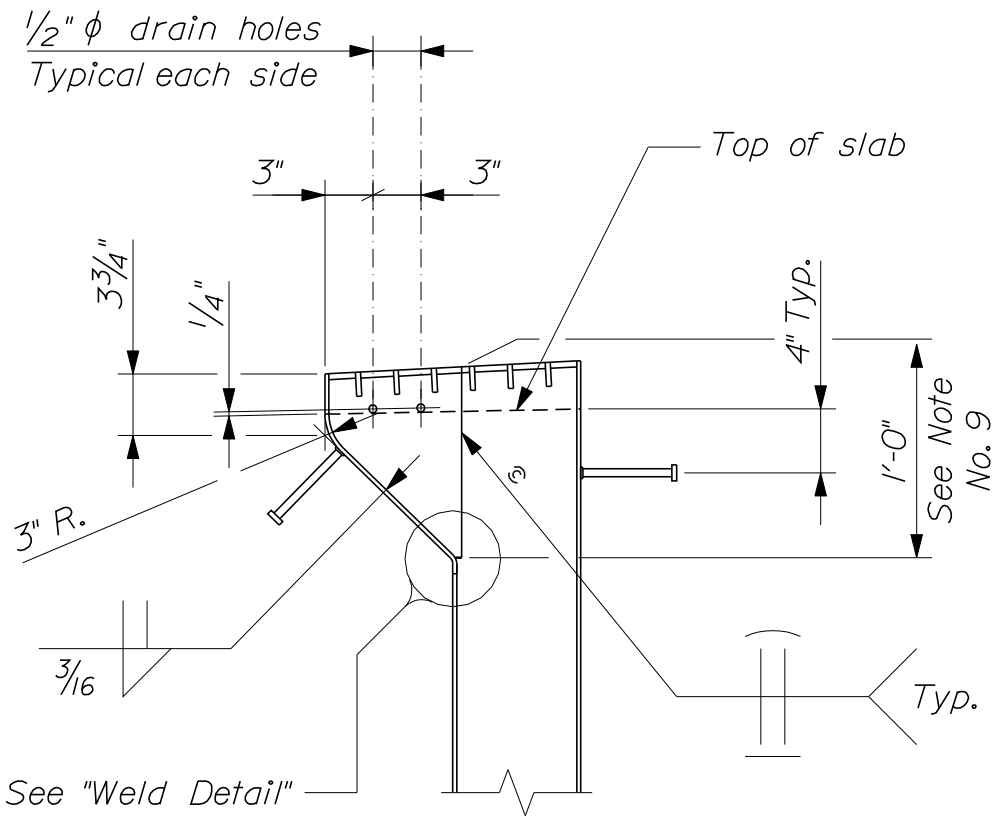

~ DRAIN TYPE "B" SECTION ~

BRIDGE DRAINS

502(20)

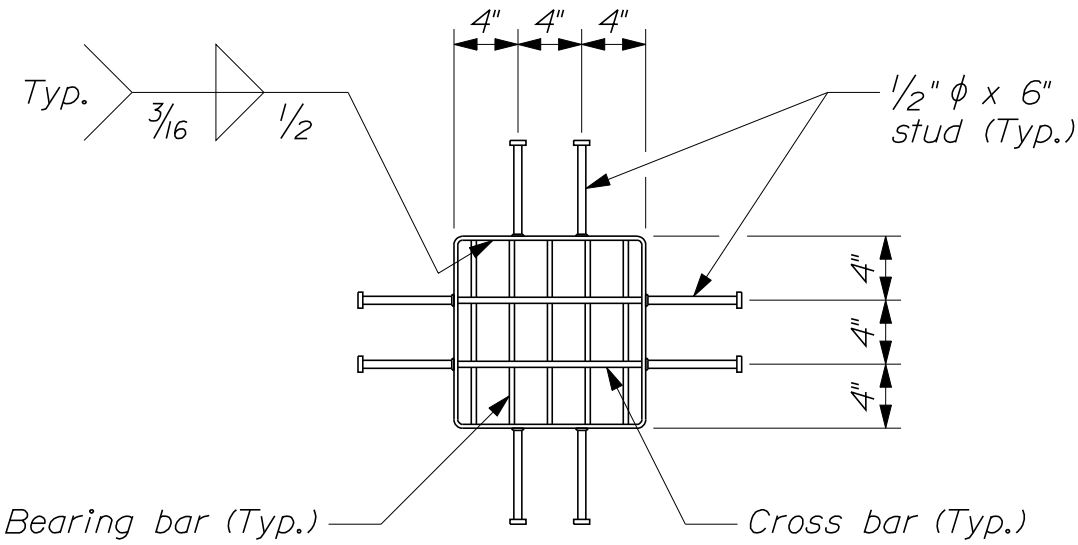

~ DRAIN TYPE "C" TOP VIEW ~

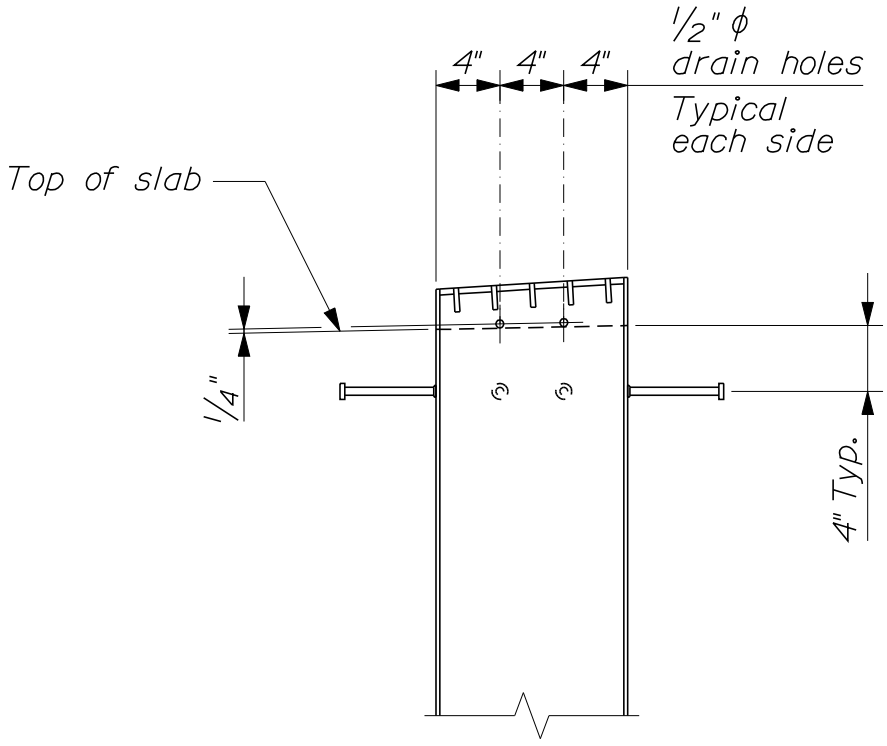

~ DRAIN TYPE "C" SECTION ~

BRIDGE DRAINS

502(21)

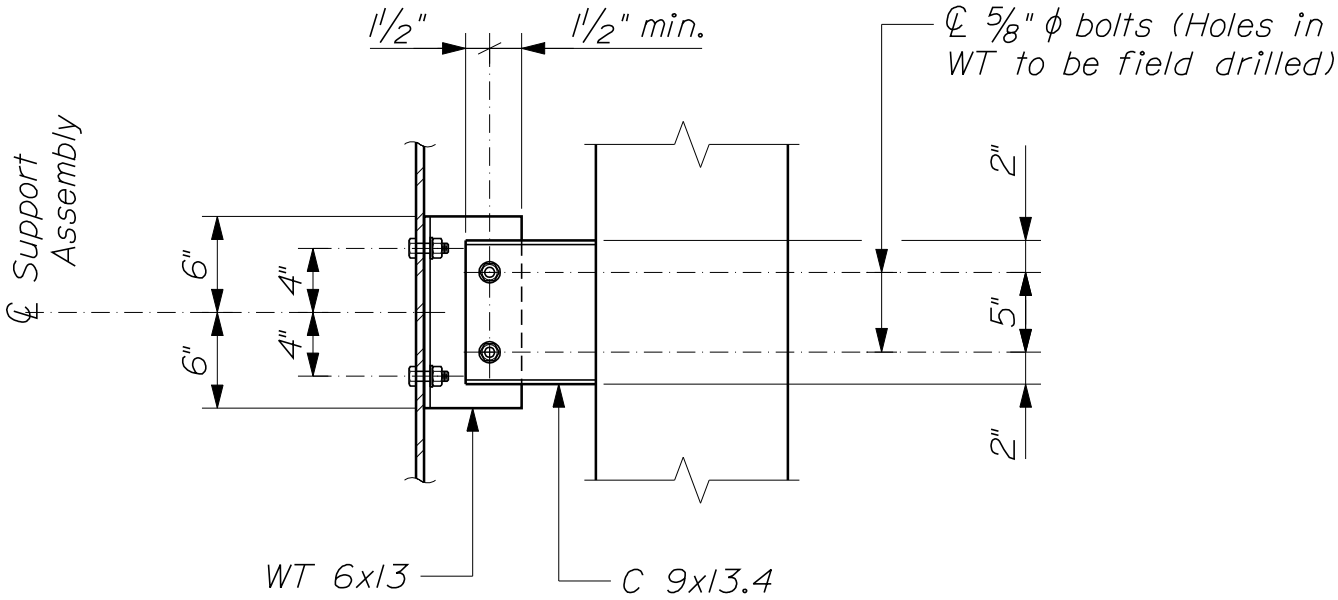

~ SUPPORT ASSEMBLY DETAIL ~

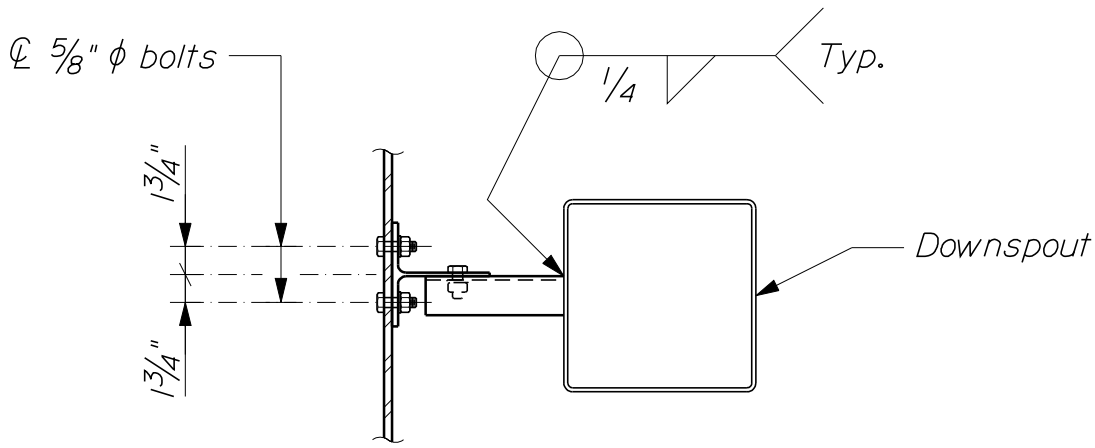

~ SUPPORT ASSEMBLY TOP VIEW ~

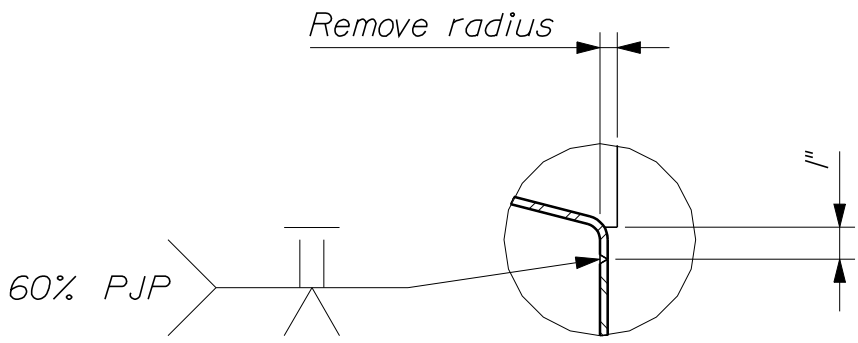

~ WELD DETAIL ~

BRIDGE DRAINS

502(22)

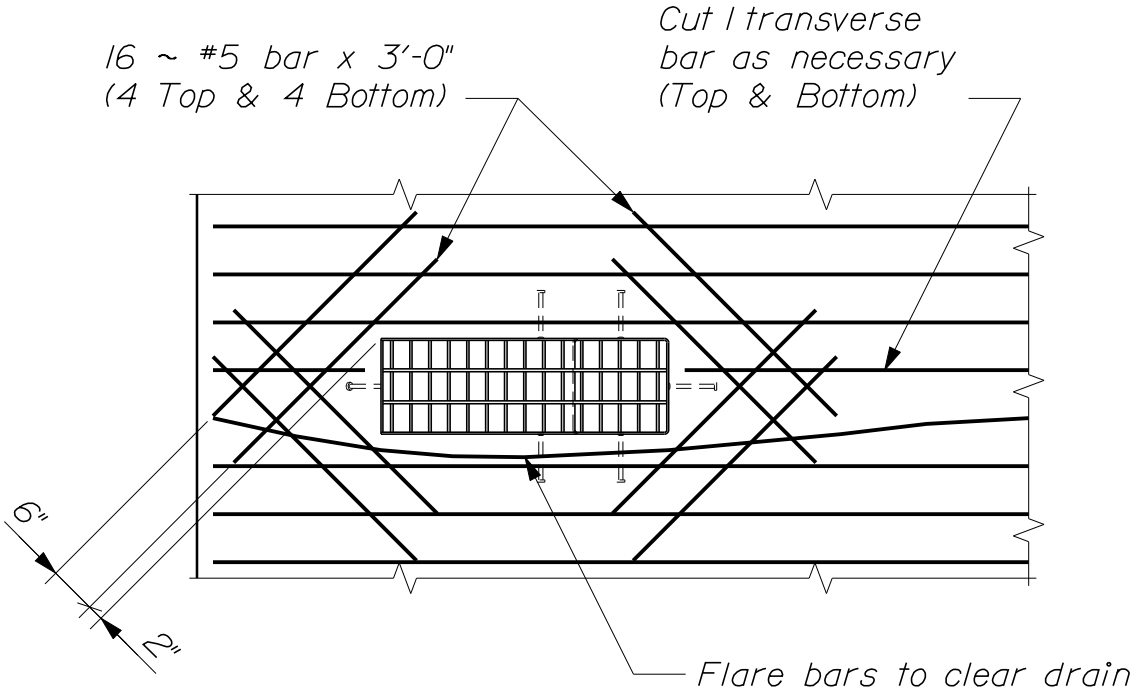

~ SLAB REINFORCING PLAN - DRAIN TYPE "A1" OR "A2" ~

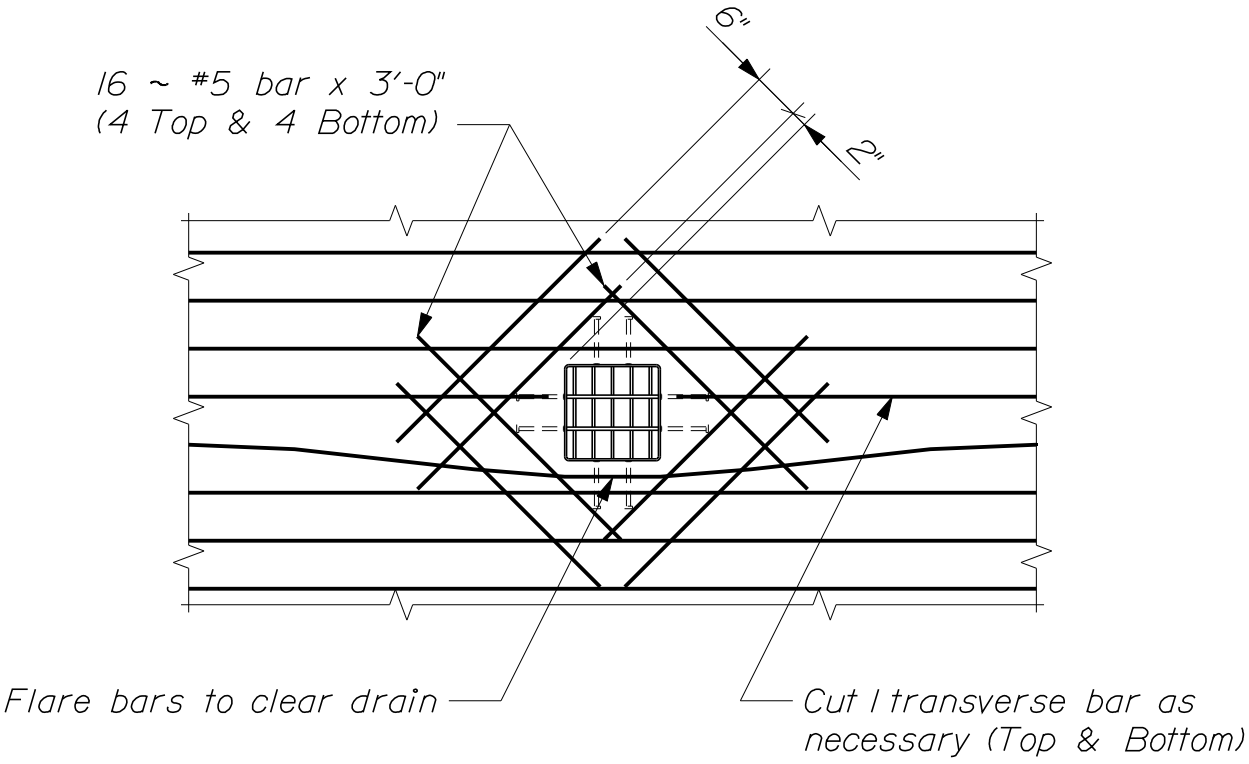

~ SLAB REINFORCING PLAN - DRAIN TYPE "B" OR "C" ~

BRIDGE DRAINS

502(23)

NOTES

1. All plates shall be 1/4 inch thick.

2. The grating shall be a commercial heavy - duty grating with 1 1/2" x 5/16" bearing bars spaced at 2 3/8 inches and 3/8" ϕ cross bars spaced at 4 inches. The grating shall be centered in the drain top.

3. The 1/2" ϕ drain holes are not required with concrete wearing surfaces.

4. Except as noted below, the drain support assembly and all associated hardware shall be galvanized in accordance with Standard Specifications Section 506.

5. For weathering or painted steel superstructures, the WT 6x13 shall be coated with a zinc rich coating system in accordance with Standard Specifications Section 506. Bolts in contact with weathering steel shall be Type 3. Nuts and washers shall be treated in the same manner as their associated bolt.

6. Shear connectors welded to the top flange of steel beams / girders may require adjustment to clear the bridge drains.

7. If the minimum thickness of concrete below the drain pan is 2 inches or less, the concrete haunch shall be extended as shown.

8. For drains installed on bridges with 1-inch thick integral concrete wearing surfaces, the drain pan depth shall be reduced from 1'-0" to 0'-9".

9. Payment for bridge drains will be as specified under Subsection 502.19 of the Standard Specifications.

10. Payment for adjusting and for providing the additional reinforcing steel at bridge drains will be considered incidental to Contract items.

11. If there is a conflict between these Standard Details and the Design Drawings, the requirements of the Design Drawings shall be followed.

MATERIALS

Downspout	ASTM A 500
Shapes & plates	AASHTO M 270M/M 270
Bolts, nuts & washers	ASTM F3125, ASTM A563 & ASTM F436
Stud/shear connectors	AASHTO/AWS D1.5, Type A
Concrete anchors	Threaded loop inserts w/bolts & washers

BRIDGE DRAINS

502(24)

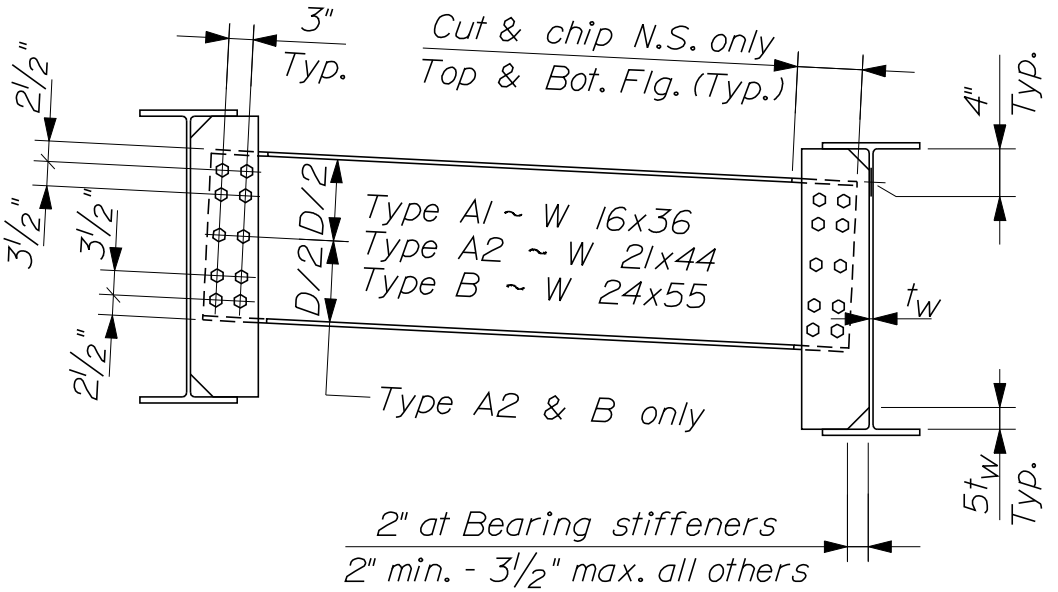

~ TYPE A1, A2, & B ~

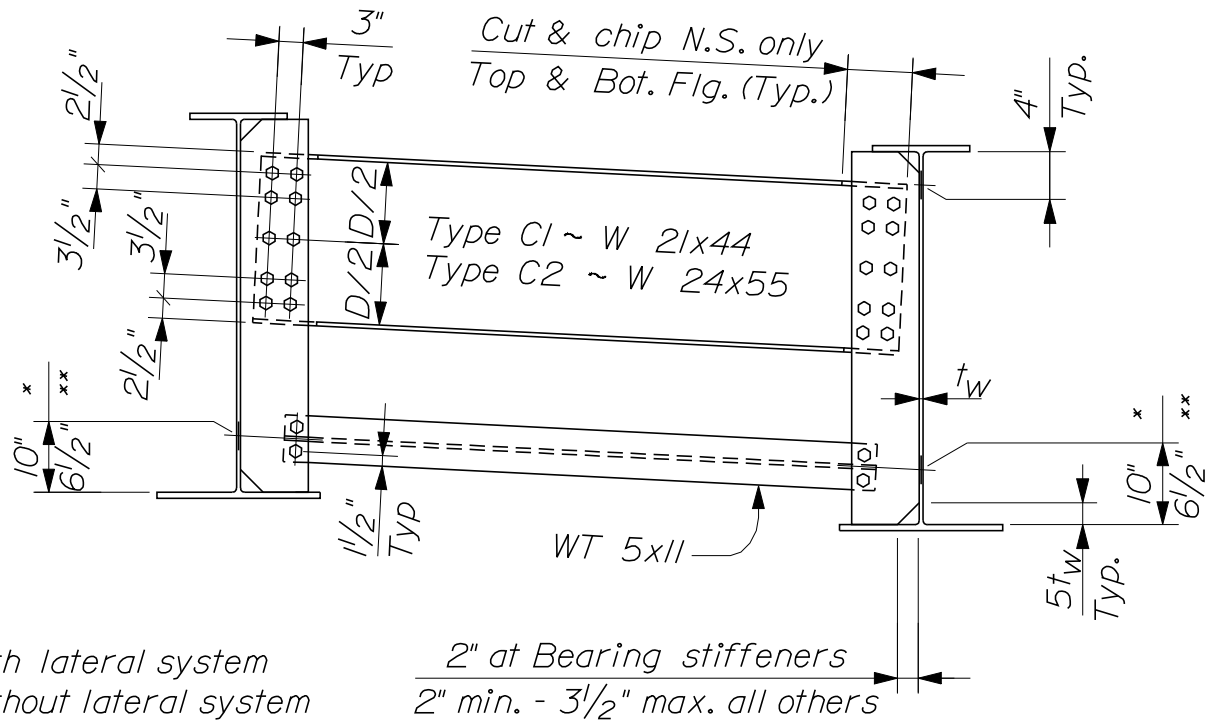

* with lateral system
** without lateral system

~ TYPE C1 & C2 ~

DIAPHRAGMS

504(01)

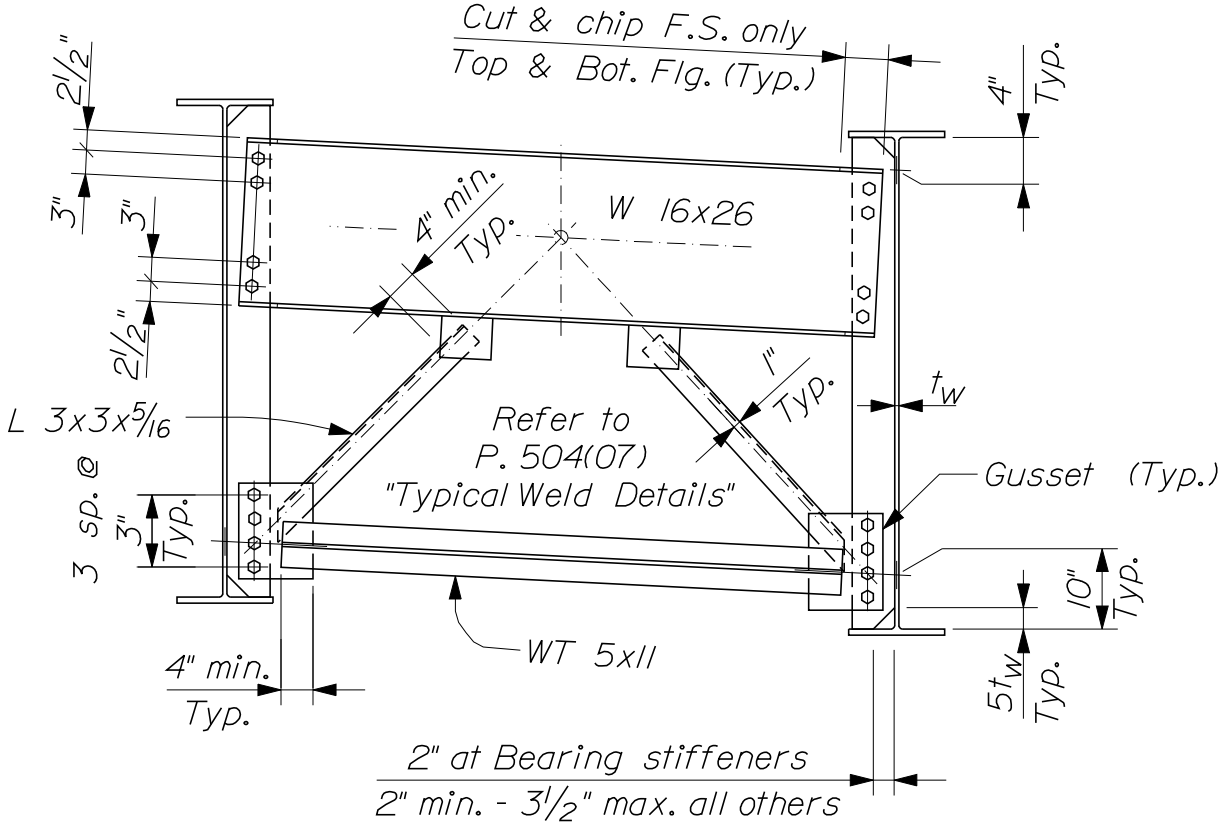

~ TYPE D ~

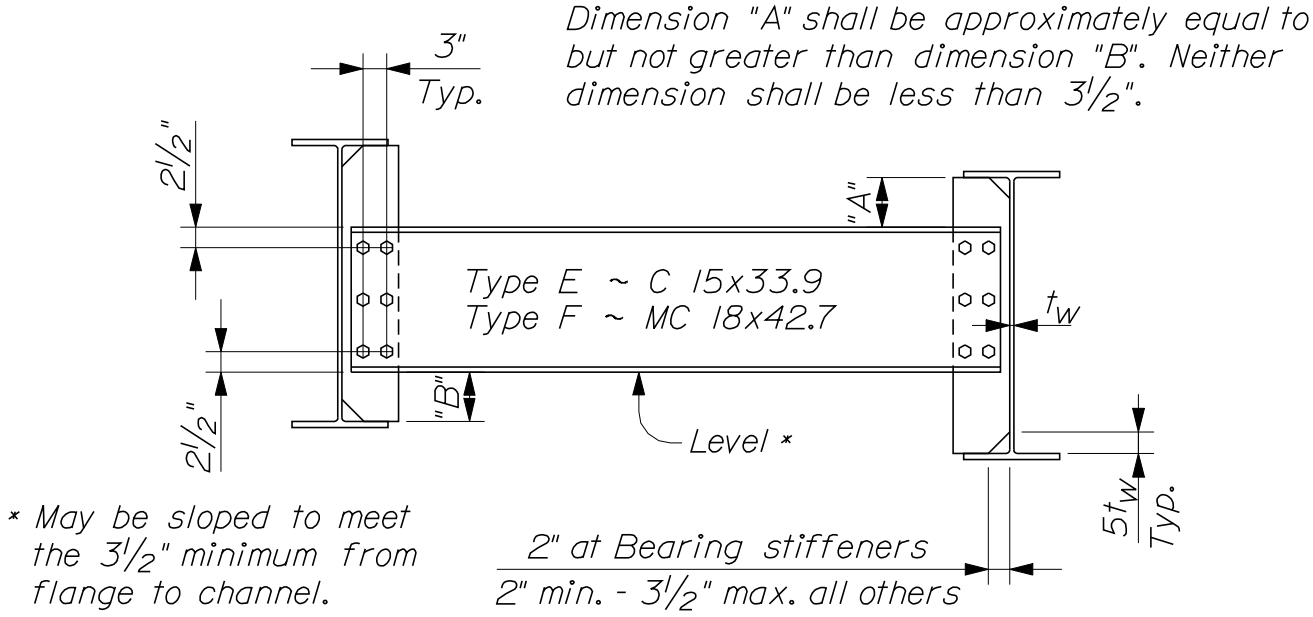

~ TYPE E & F ~

DIAPHRAGMS

504(02)

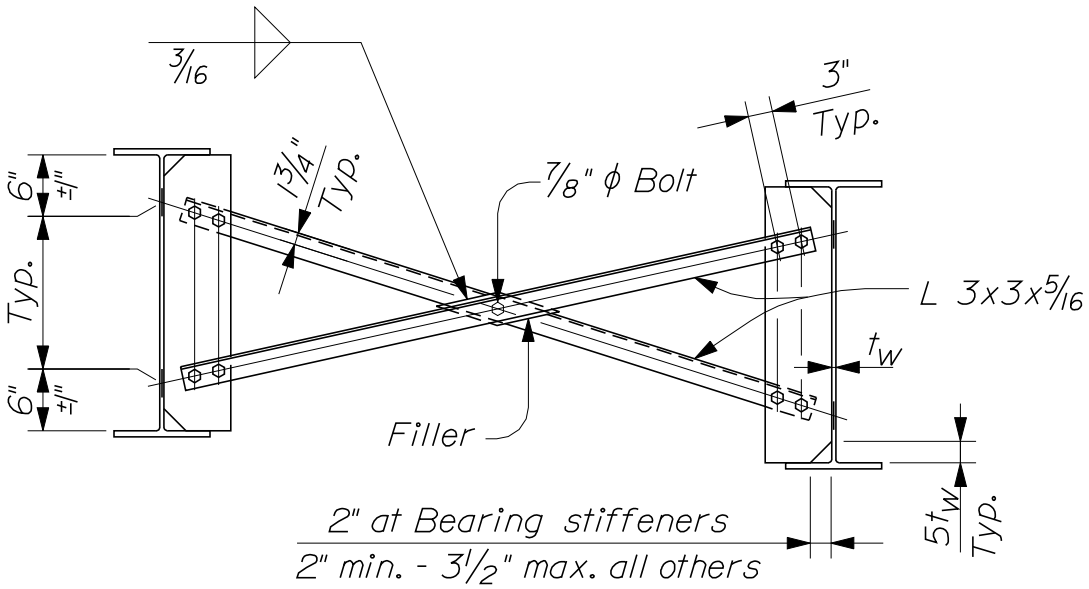

~ TYPE G ~

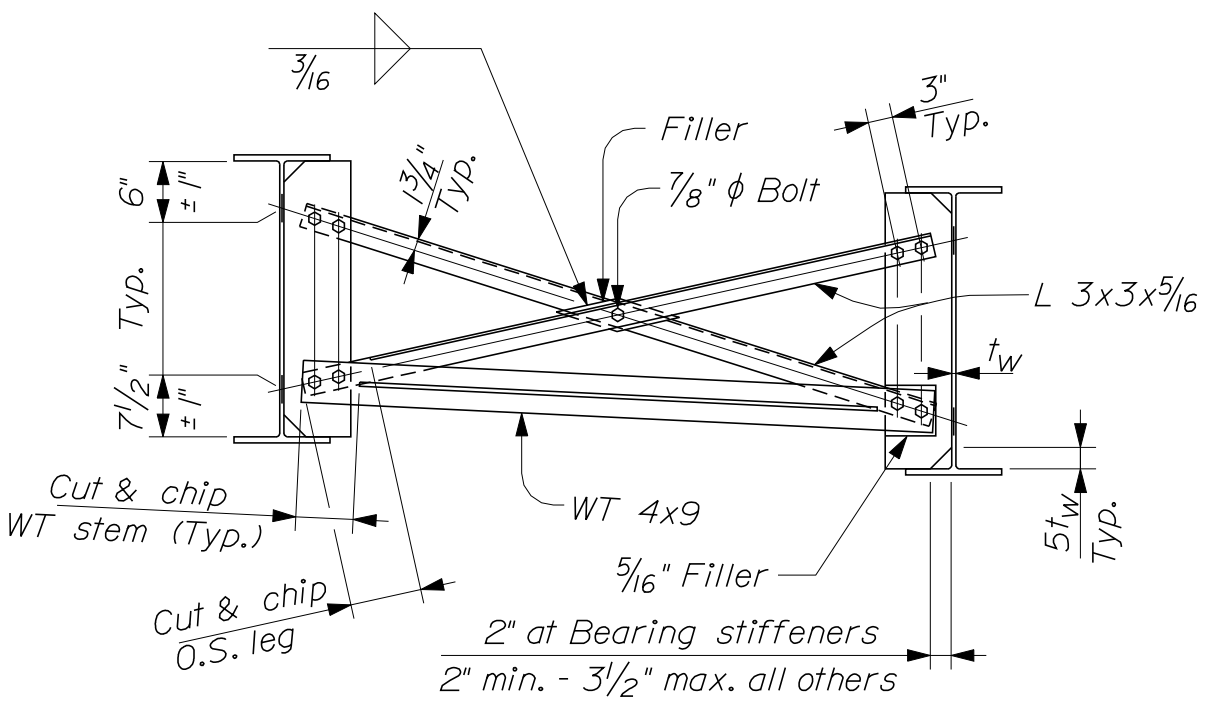

~ TYPE H ~

CROSSFRAMES

504(03)

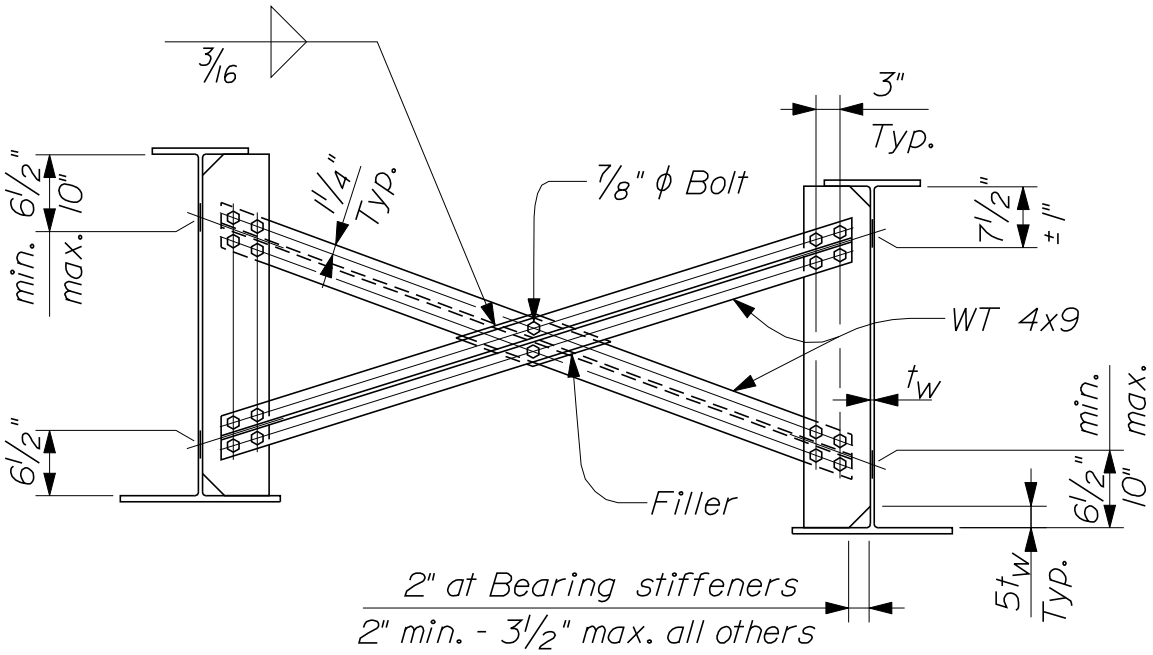

~ TYPE J ~

Refer to P. 504(07)
"Typical Weld Details"

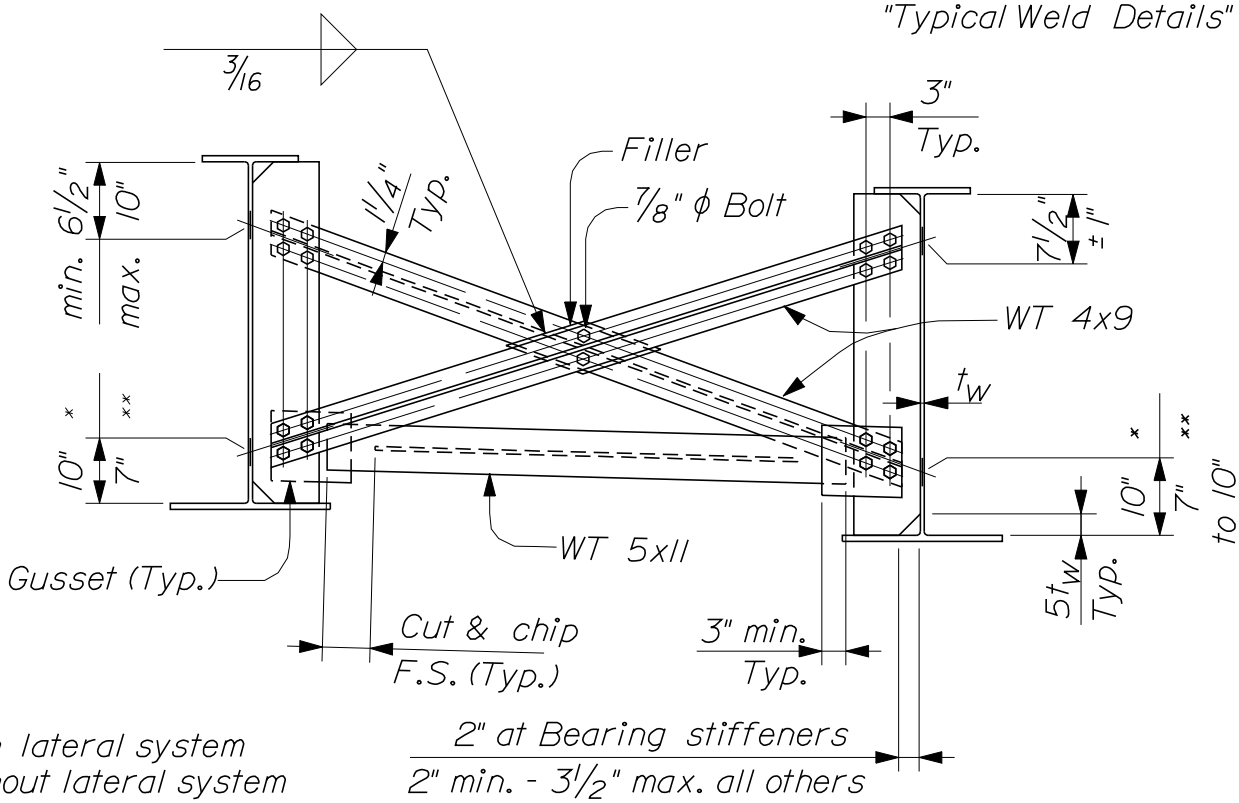

* with lateral system
** without lateral system

~ TYPE K ~

CROSSFRAMES

504(04)

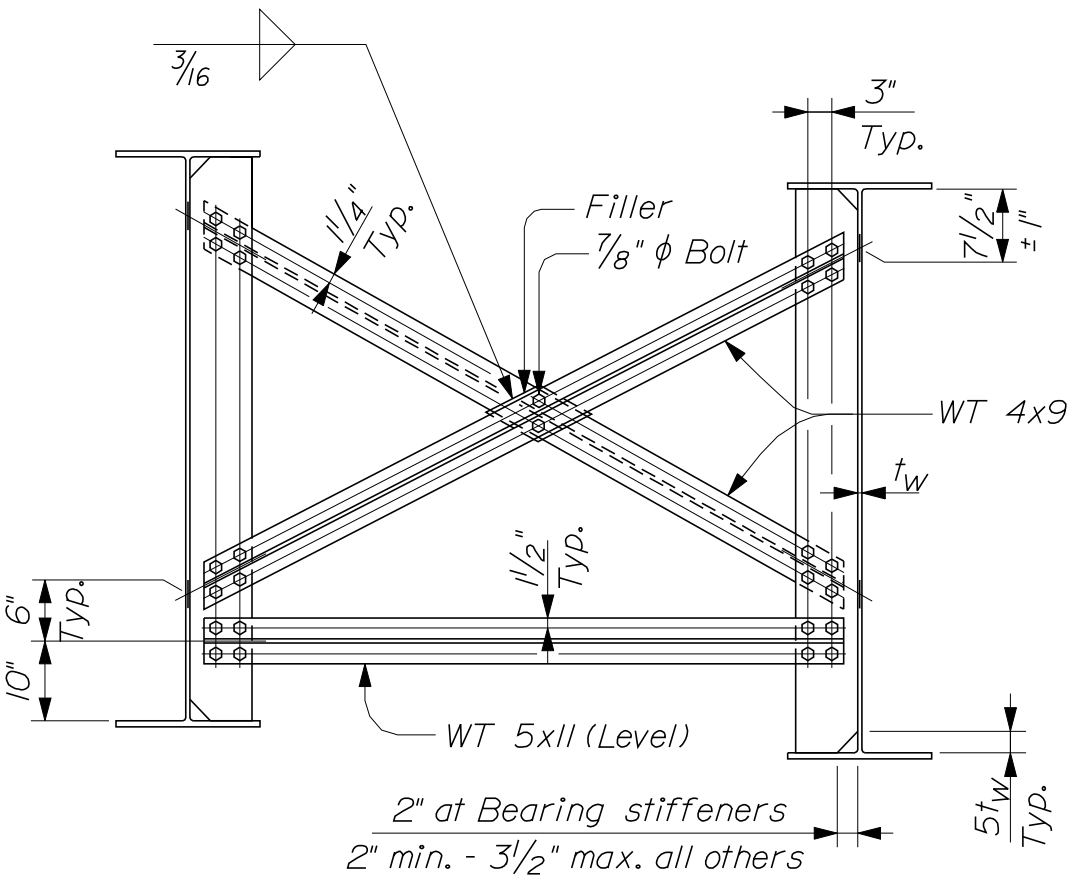

~ TYPE L ~

CROSSFRAMES

504(05)

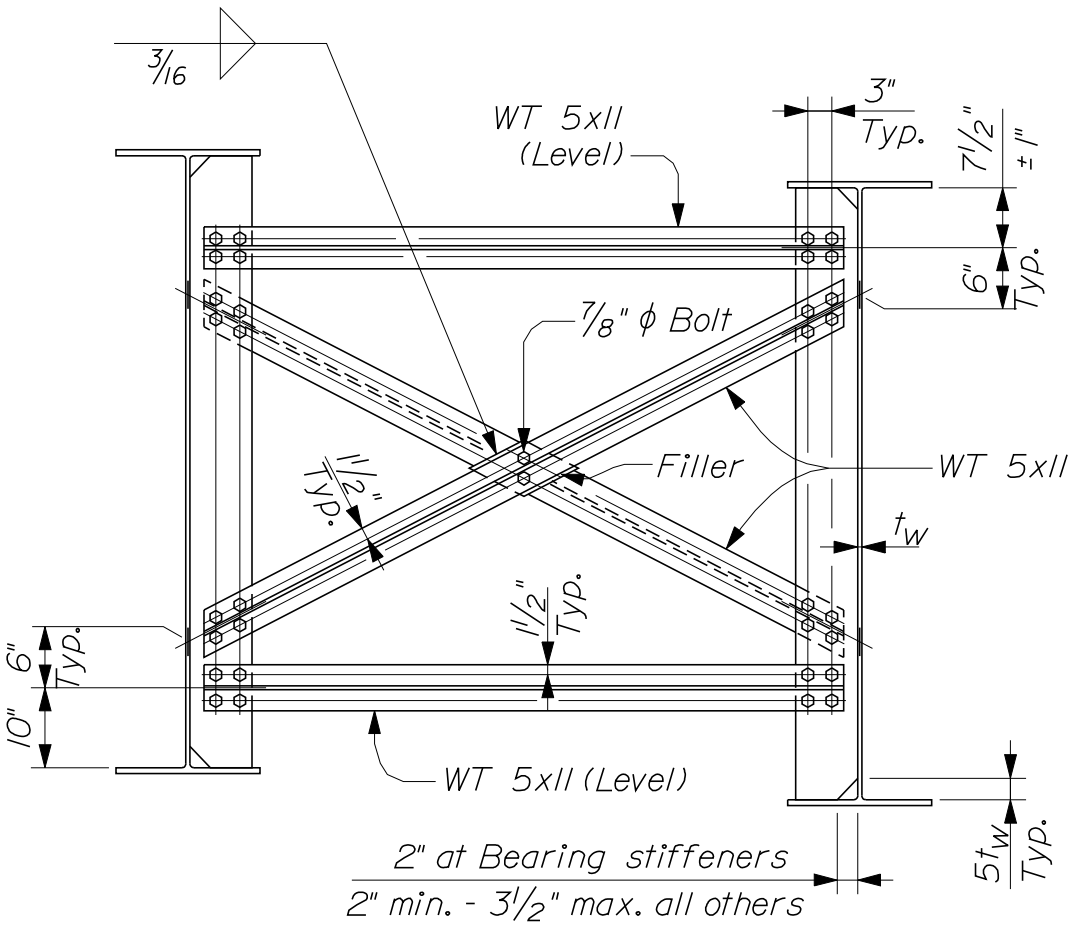

~ TYPE M ~

CROSSFRAMES

504(06)

NOTES:

1. Steel for diaphragms, crossframes, connection plates, gussets and stiffeners shall be as designated on the Design Drawings.

2. All welds for diaphragms, crossframes, connection plates, gussets and stiffeners shall begin and terminate $\frac{5}{8}$" ± $\frac{1}{8}$" from the ends of the plates.

3. Bolt holes shall be $\frac{15}{16}$". The minimum edge distance shall be 1 $\frac{1}{2}$" unless otherwise shown on the Design Drawings. Oversized holes may be used with the permission of the Fabrication Engineer.

4. Connection plates and gussets shall be $\frac{3}{8}$" minimum thickness. Connection plates shall be 7" minimum width and full web depth, and they shall be tight fit to both flanges.

5. The plate thickness for stiffeners and bent connection plates shall be as shown on the Design Drawings. Bearing stiffeners shall be mill - to - bear on the bottom flange and tight fit to the top flange.

6. Intermediate stiffeners shall be tight fit to both flanges. Intermediate stiffeners used as connection plates shall be detailed as connection plates.

7. Connection plates and stiffeners used as connection plates shall be welded to the web and flanges on both sides of the plates.

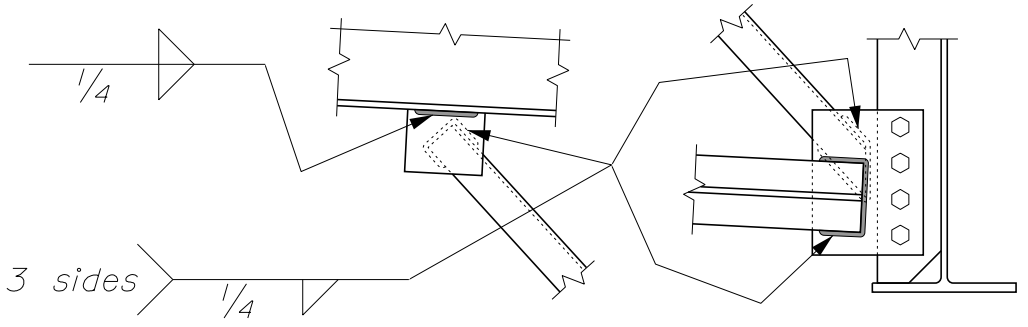

~ TYPICAL WELD DETAILS ~

DIAPHRAGM & CROSSFRAME NOTES

504(07)

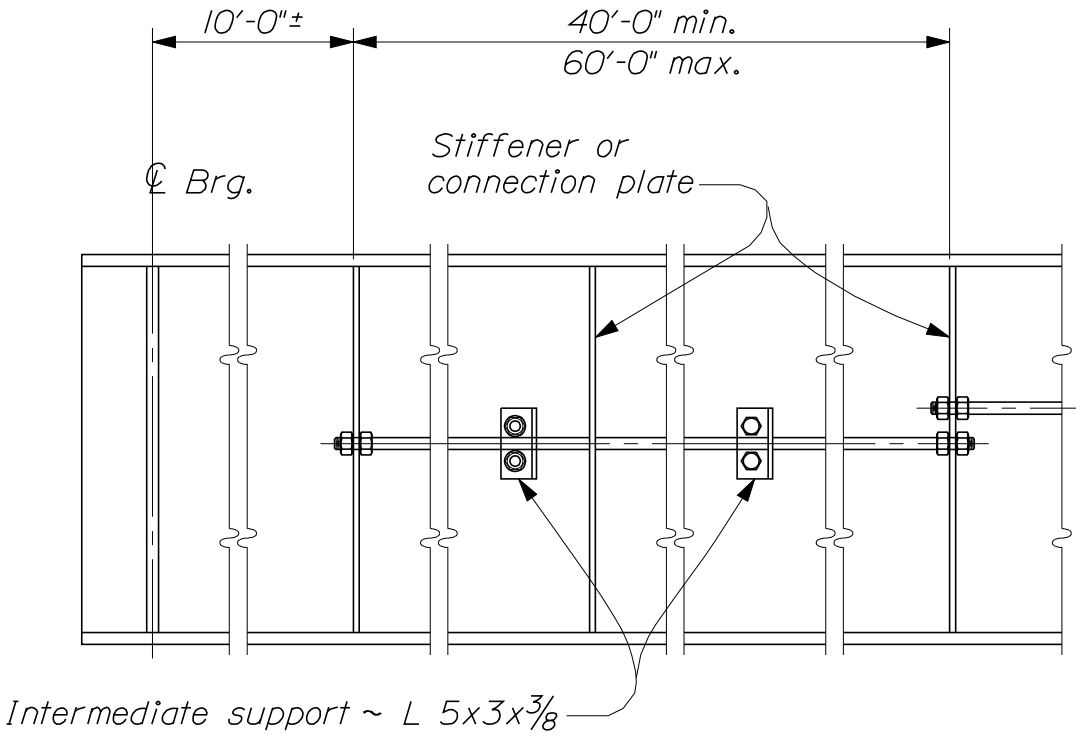

~ ELEVATION ~

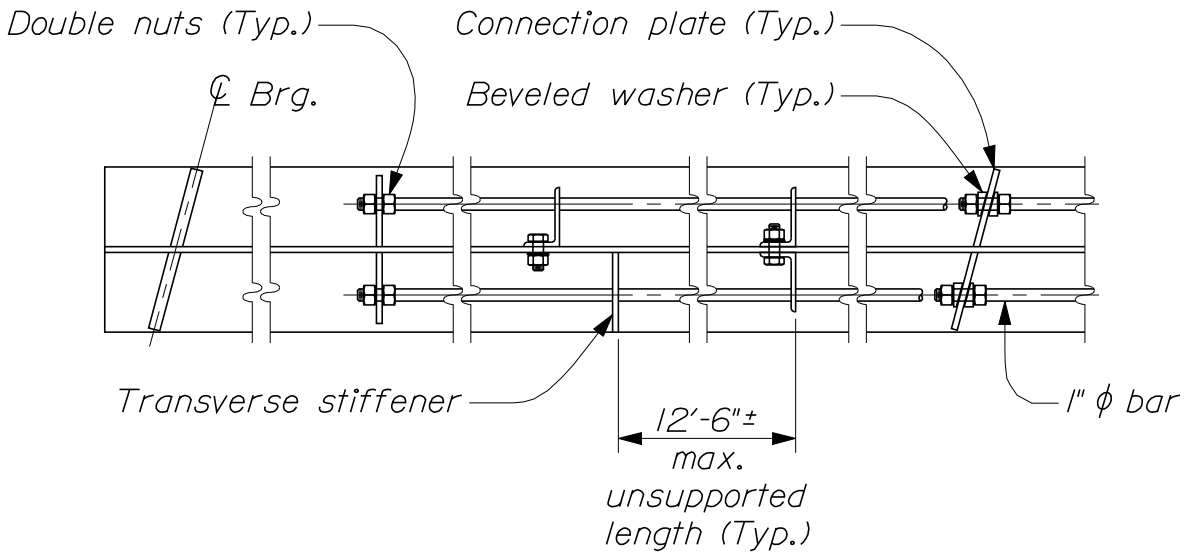

~ PLAN ~

HAND - HOLD DETAILS

504(08)

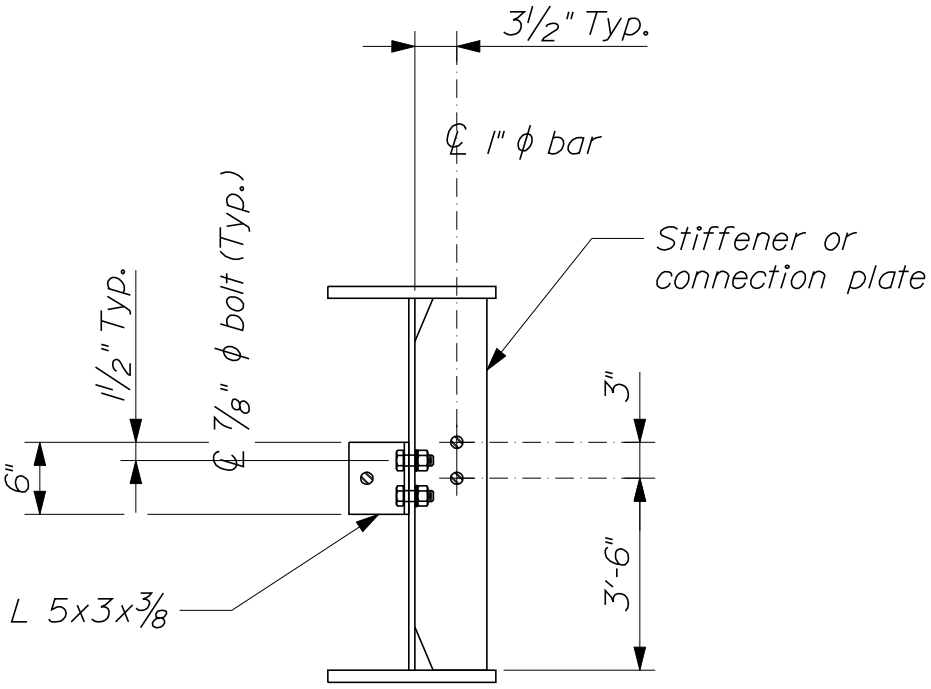

~ TYPICAL SECTION ~

NOTES:

1. Hand - hold bars shall be installed on the inside of exterior beams and on both sides of interior beams when called for on the Design Drawings.

2. Termination and splicing of hand - hold bars shall occur at stiffeners or connection plates. Angle supports shall be used at intermediate locations only. All termination and splice plates shall be a minimum of ½ inch thick. Additional stiffeners shall be provided where necessary to meet the described requirements.

3. Hole sizes for bolts and hand - hold bars shall be 1/16 inch larger than the bolt / bar size. Edge distances for holes shall be 1½ inches unless otherwise shown.

4. For unpainted applications, the hand - hold bar and nuts shall be galvanized to conform to ASTM M 111M/M 111.

MATERIALS:

With unpainted structural steel - All steel.....AASHTO M 270/M 270M, Gr. 50W
With painted structural steel - All steel.....AASHTO M 270M/M 270, Gr. 36
Heavy hex nuts for 1" ϕ bar.....AASHTO M 291

HAND - HOLD DETAILS

504(09)

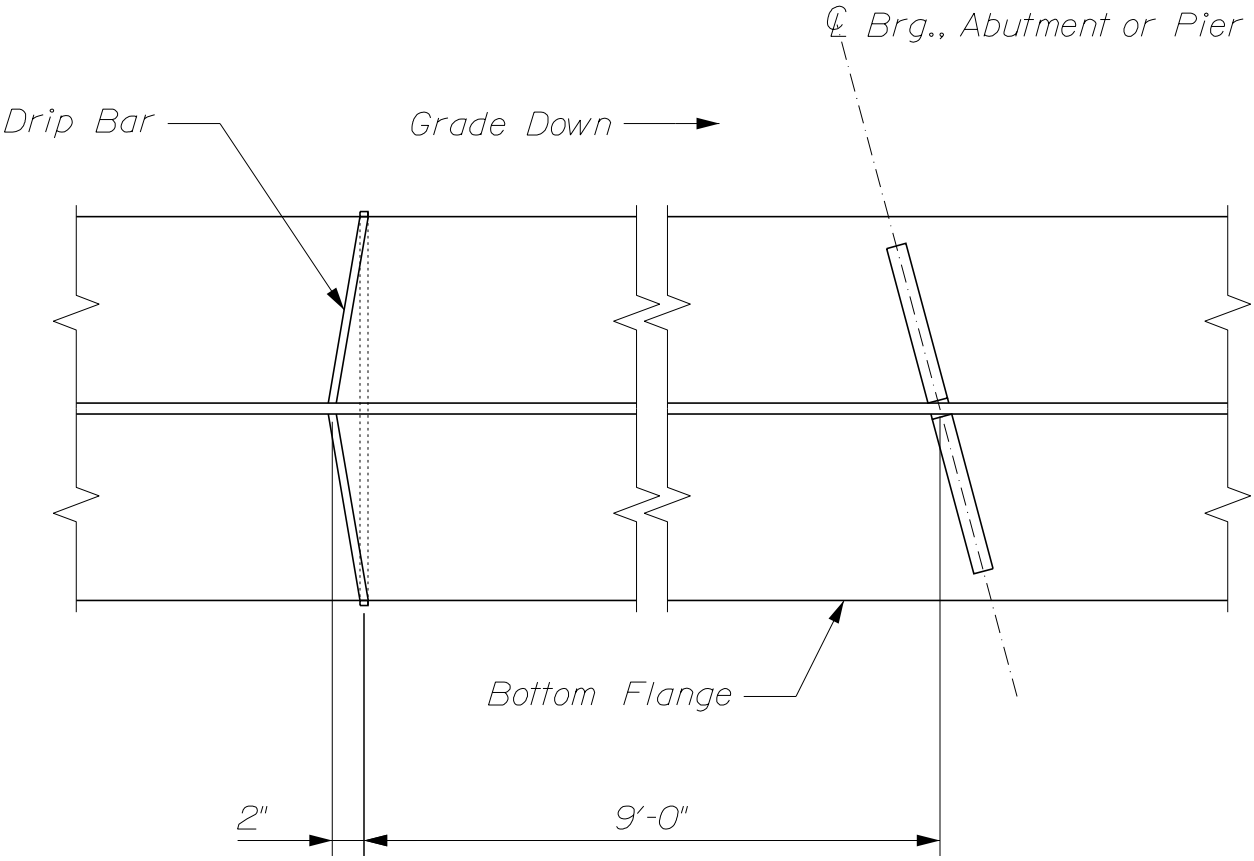

~ DRIP BAR PLAN ~

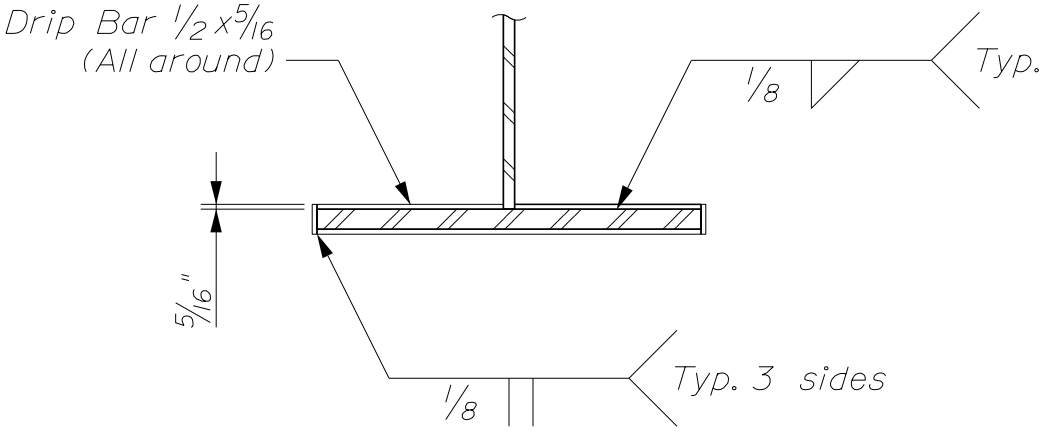

~ DRIP BAR SECTION ~

DRIP BAR DETAILS

504(10)

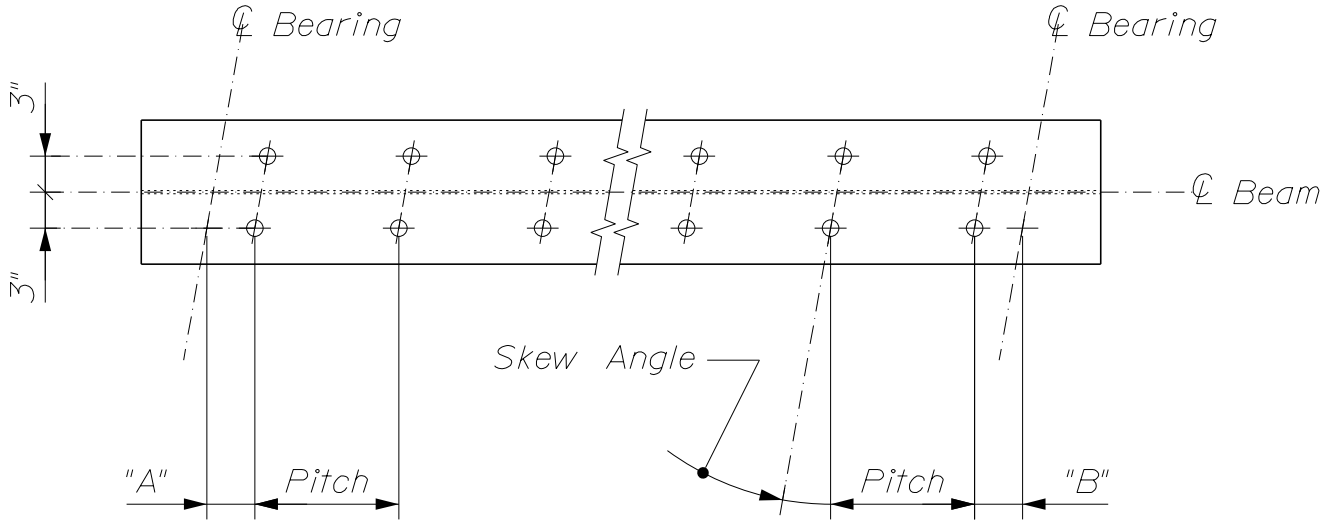

~ DOUBLE STUD LAYOUT ~

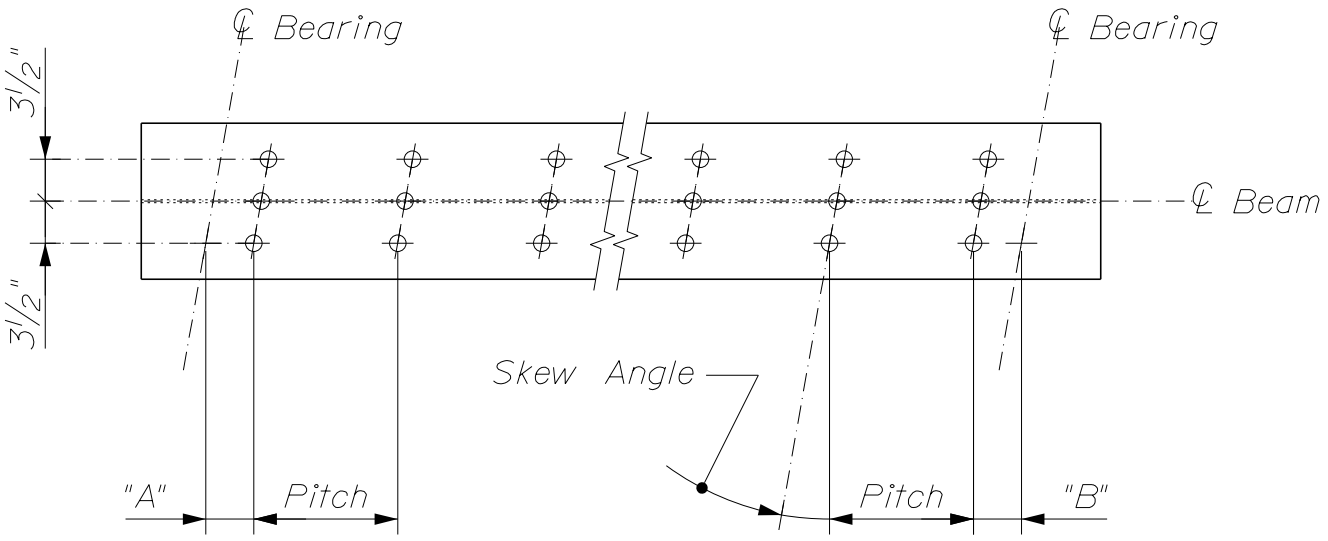

~ TRIPLE STUD LAYOUT ~

NOTES:

1. Refer to Design Drawings for dimensions "A" and "B", stud pitch and skew angle.

2. Studs shall project a minimum of 2" above the bottom of the slab.

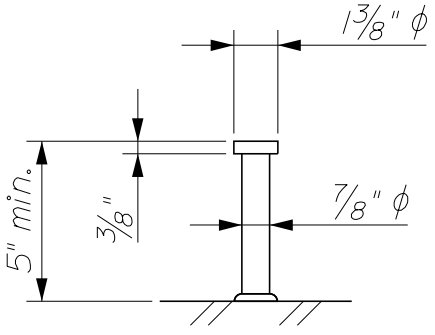

~ STUD DETAIL ~

SHEAR CONNECTORS

505(01)

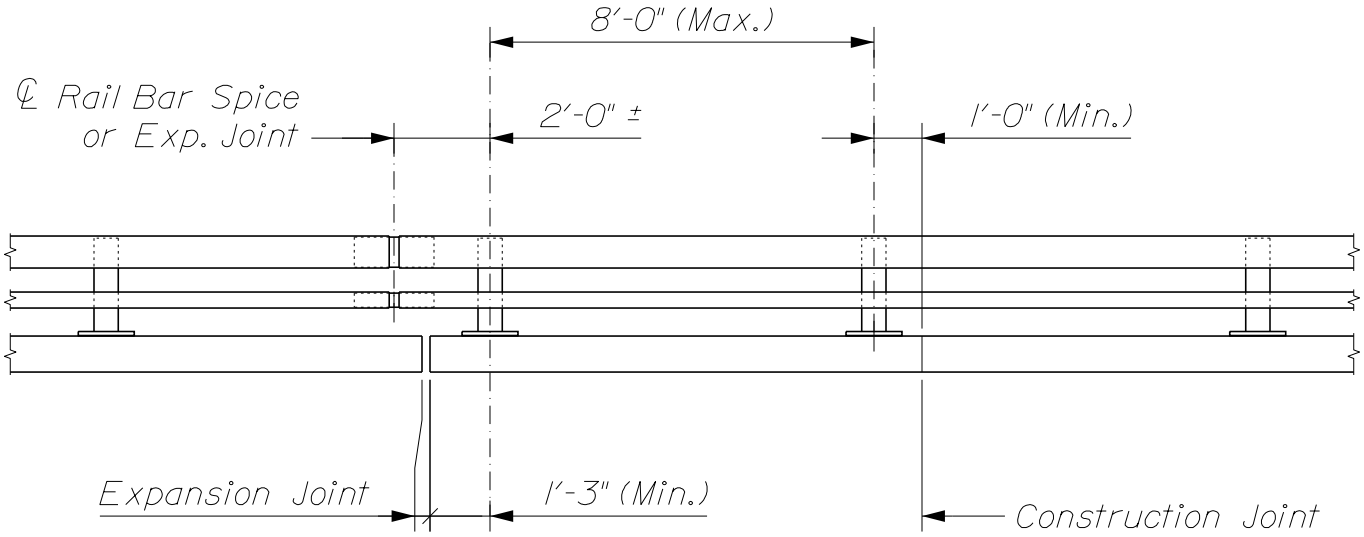

~ 2 - BAR TRAFFIC RAILING ~

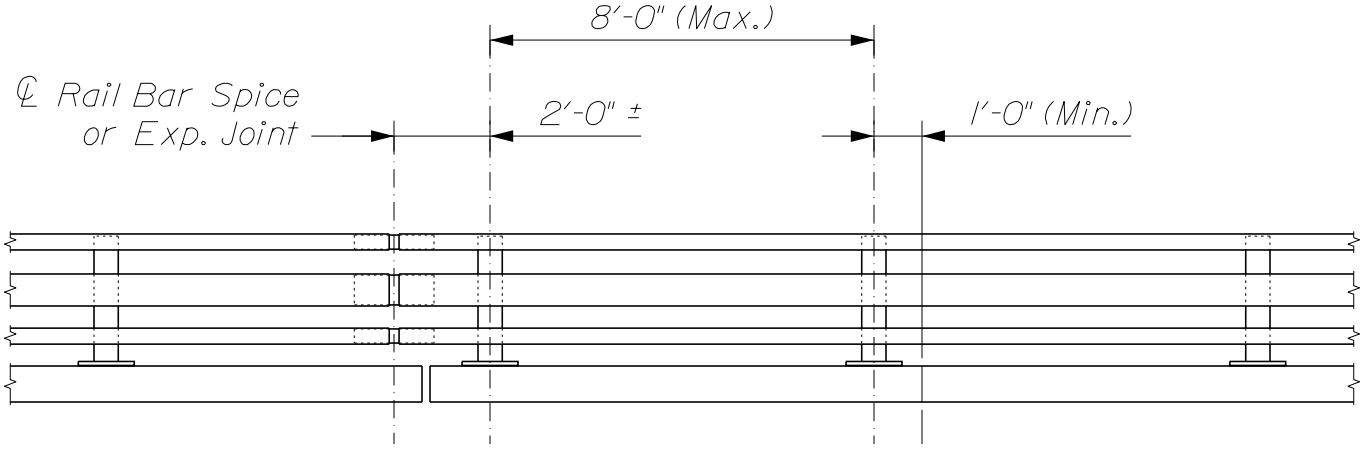

~ 3 - BAR TRAFFIC / BICYCLE RAILING ~

(4 - Bar Traffic / Bicycle Railing similar)

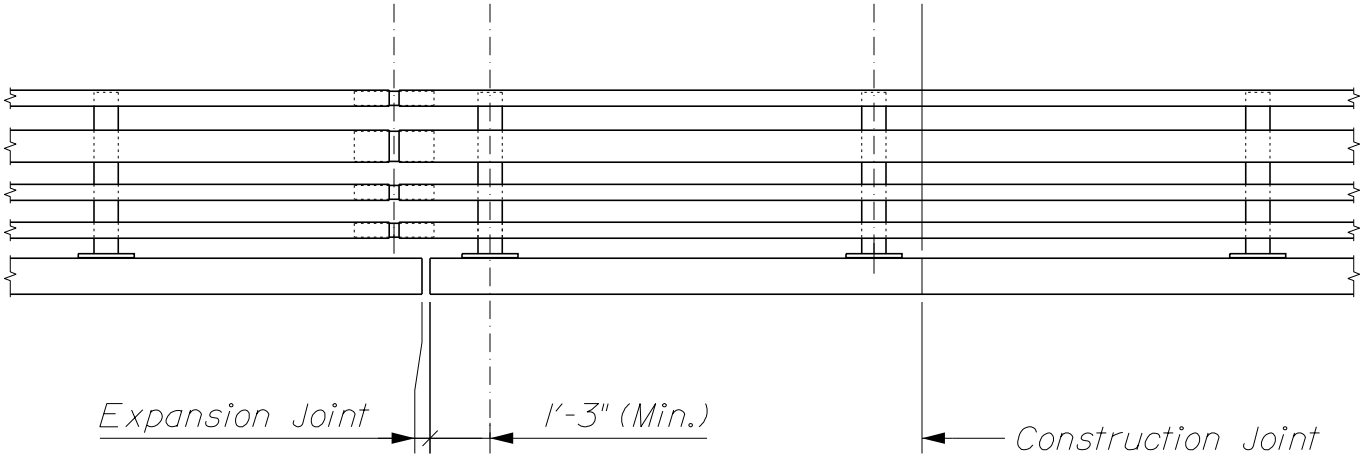

~ 4 - BAR TRAFFIC / PEDESTRIAN RAILING ~

STEEL BRIDGE RAILING

507(01)

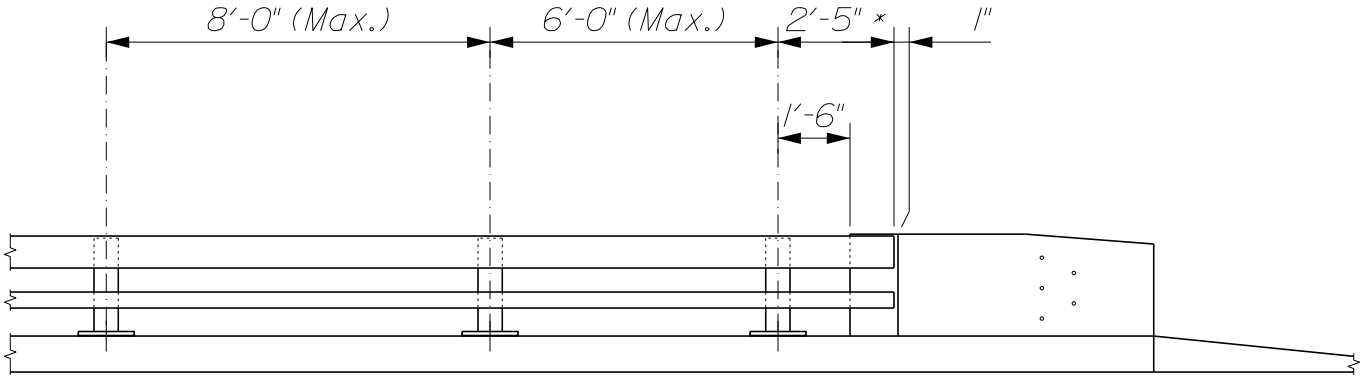

~ 2 - BAR TRAFFIC RAILING ~

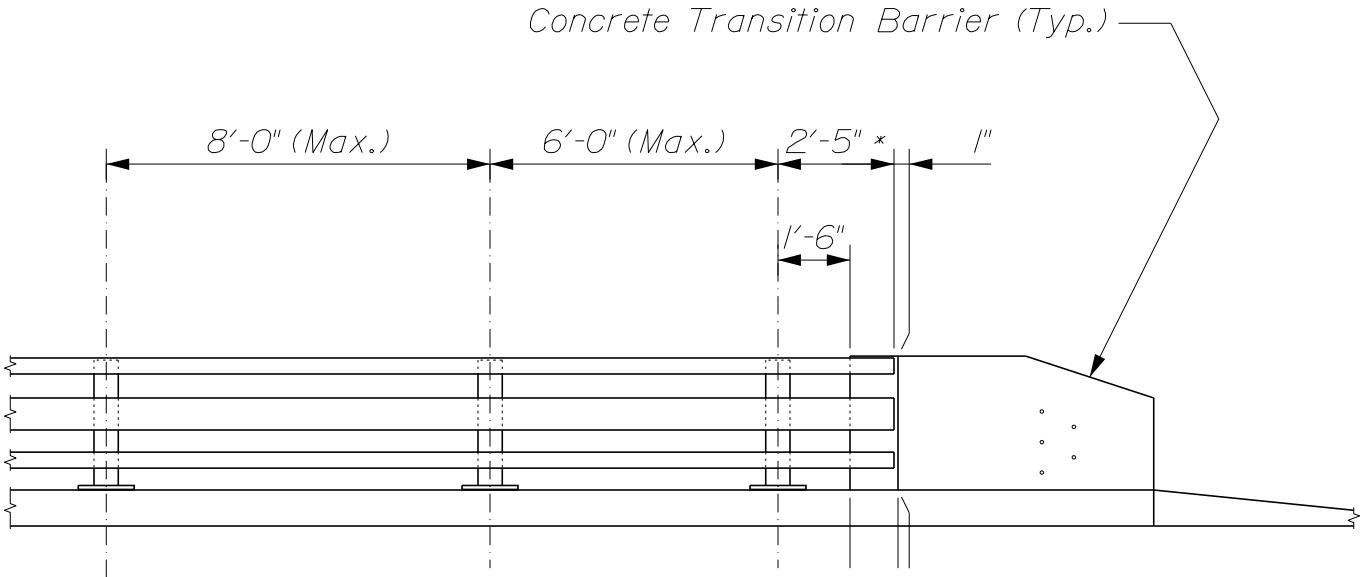

~ 3 - BAR TRAFFIC / BICYCLE RAILING ~
(4 - Bar Traffic / Bicycle Railing similar)

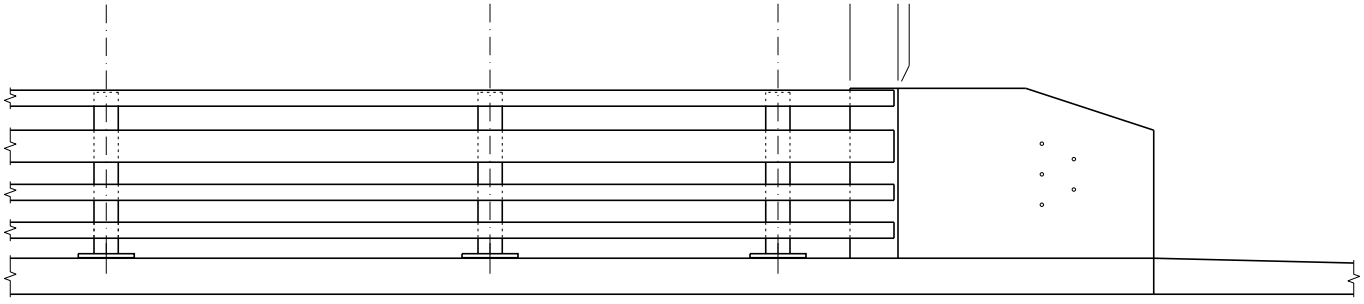

~ 4 - BAR TRAFFIC / PEDESTRIAN RAILING ~

* Including Rail Bar Cap (Typ.)

STEEL BRIDGE RAILING

507(02)

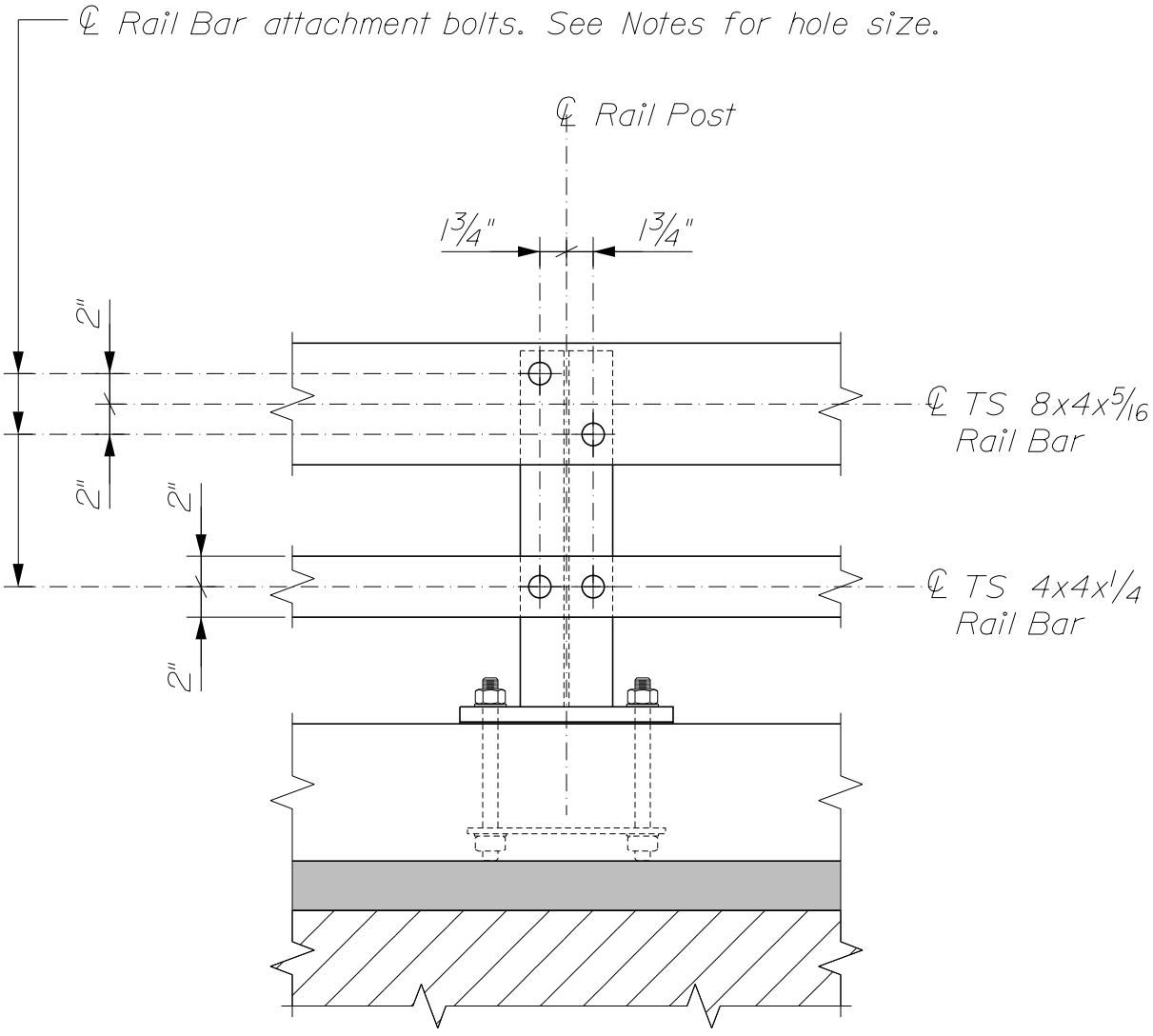

~ TYPICAL RAILING ELEVATION ~

2 - Bar Traffic Railing is shown.

Other railing configurations are similar.

STEEL BRIDGE RAILING

507(03)

Rail Bars:
TS 8x4x5/16 (1)
TS 4x4x1/4 (1)

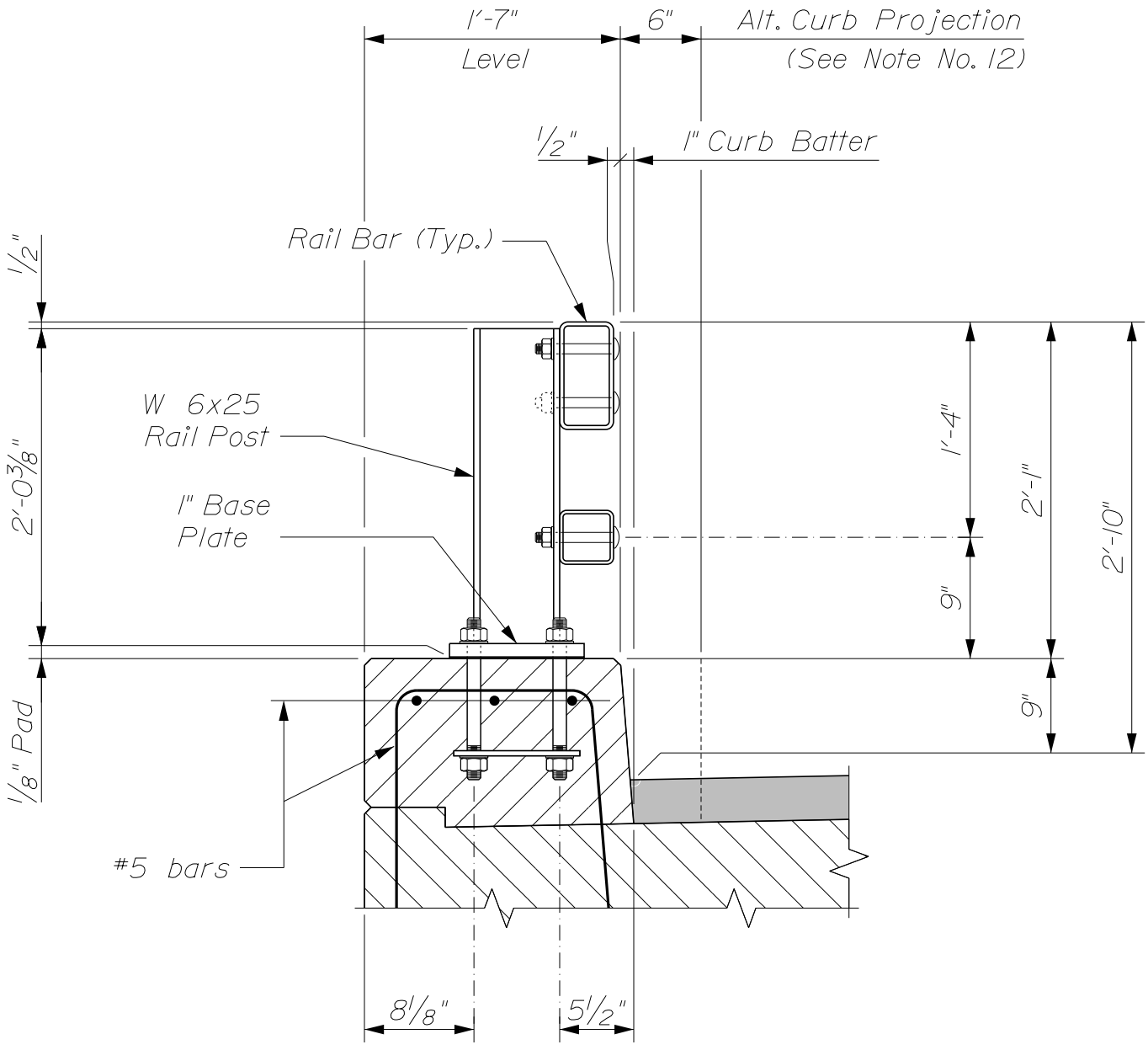

~ TYPICAL RAILING SECTION ~
(2 - Bar Traffic Railing)

STEEL BRIDGE RAILING

507(04)

Rail Bars:
TS 8x4x5/16 (1)
TS 4x4x1/4 (2)

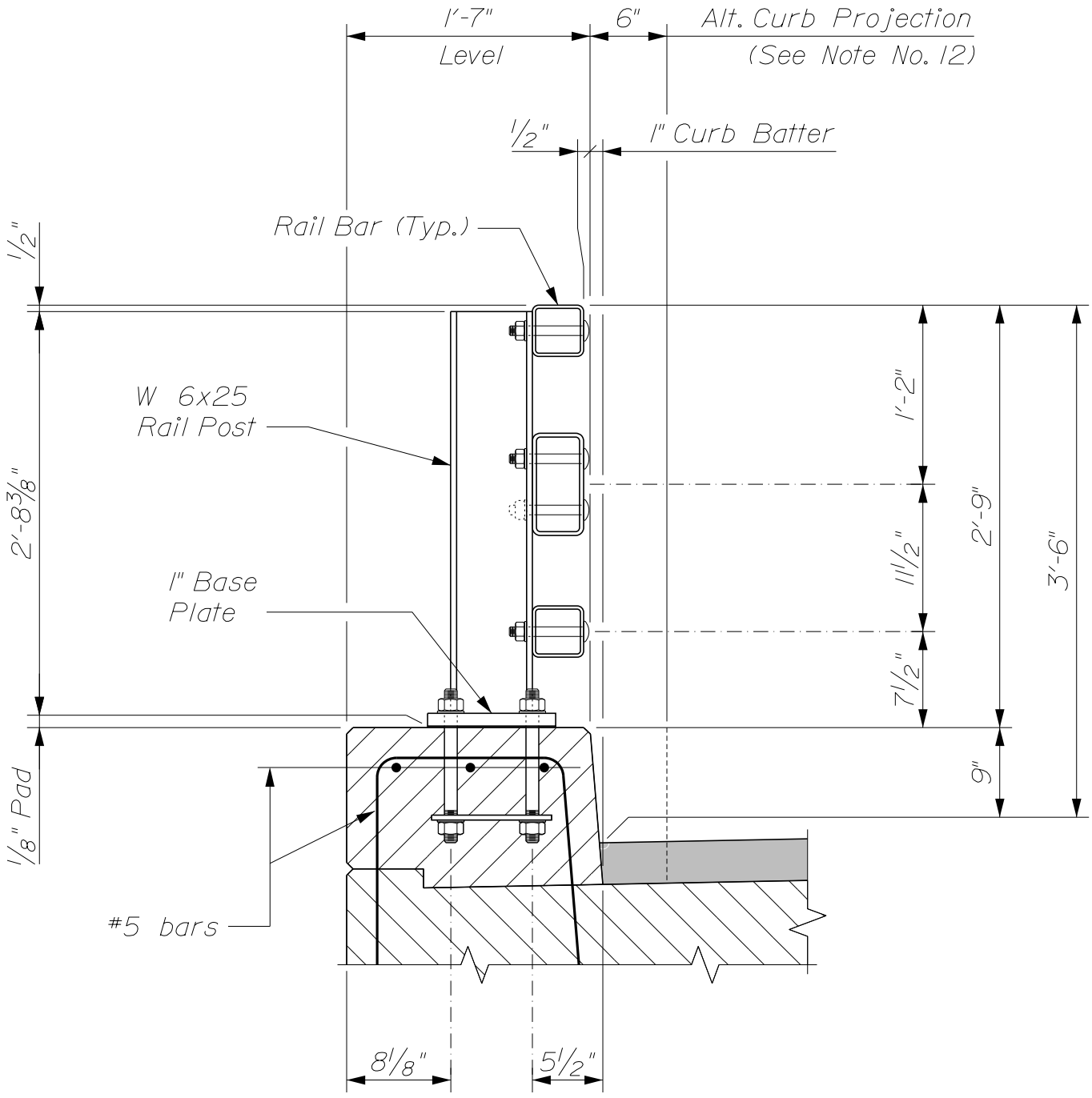

~ TYPICAL RAILING SECTION ~
(3 - Bar Traffic / Bicycle Railing)

STEEL BRIDGE RAILING

507(05)

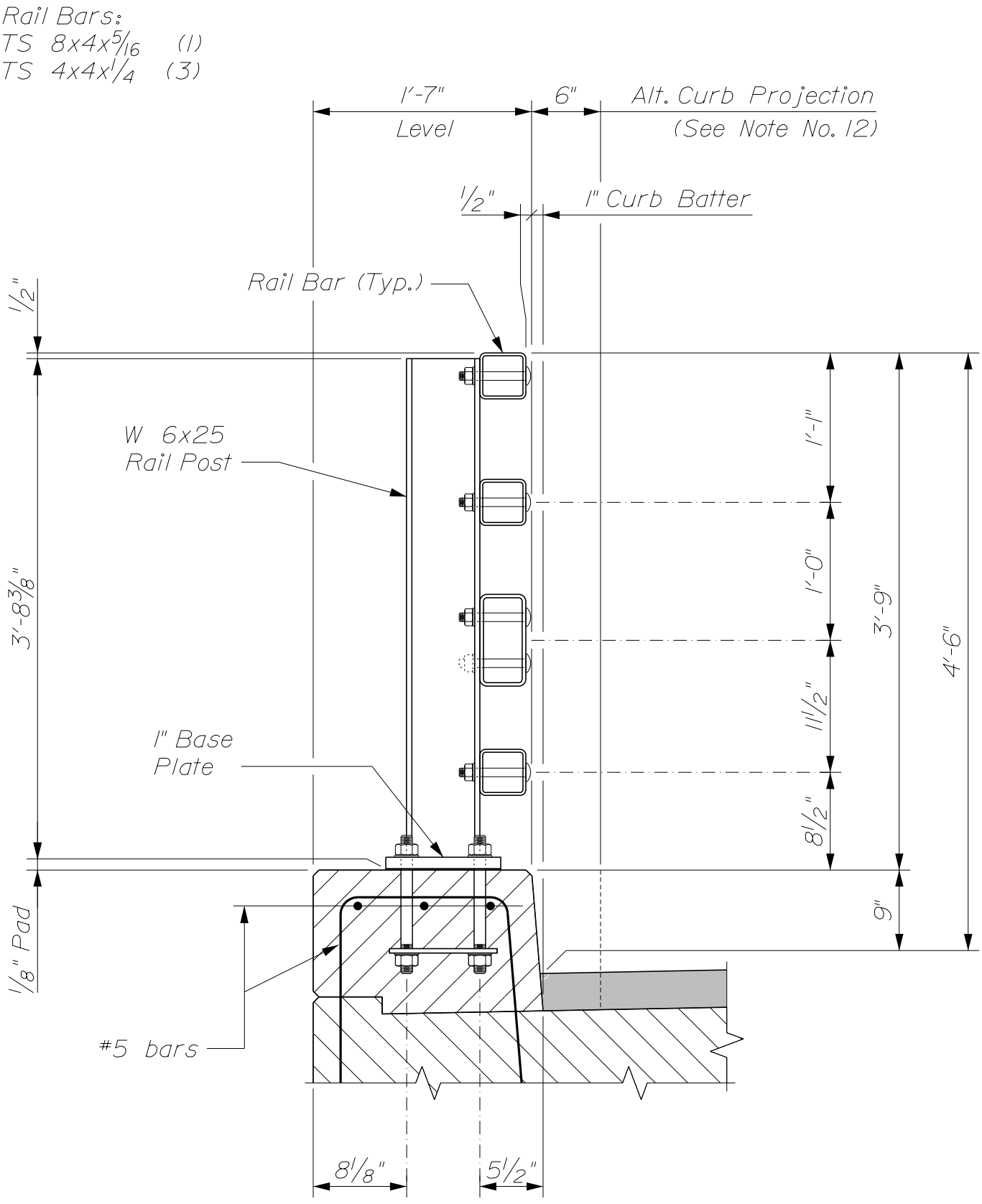

~ TYPICAL RAILING SECTION ~
(4 - Bar Traffic / Bicycle Railing)

STEEL BRIDGE RAILING

507(06)

Rail Bars:
TS 8x4x5/16 (1)
TS 4x4x1/4 (3)

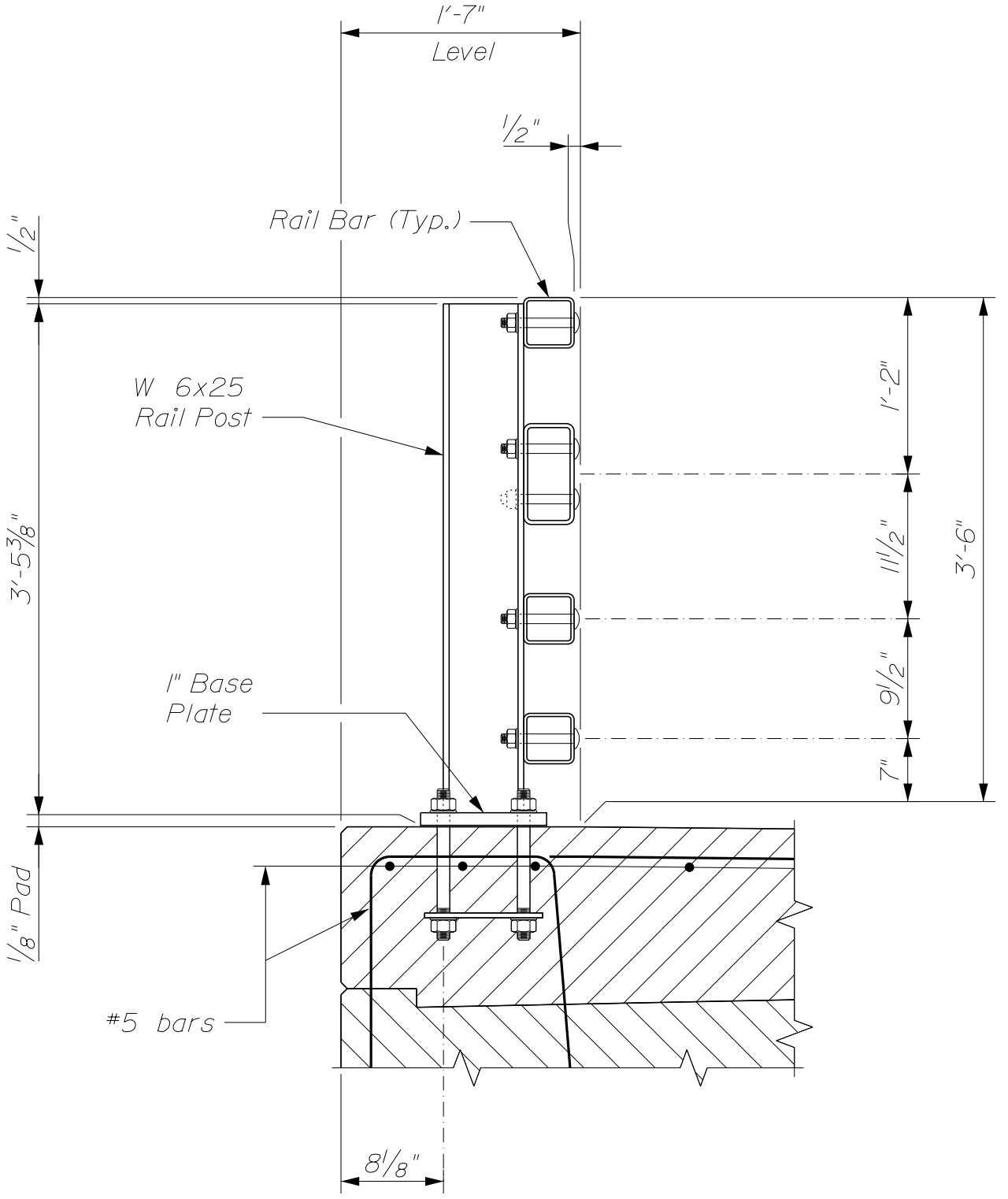

~ TYPICAL RAILING SECTION ~
(4 - Bar Traffic / Pedestrian Railing)

STEEL BRIDGE RAILING

507(07)

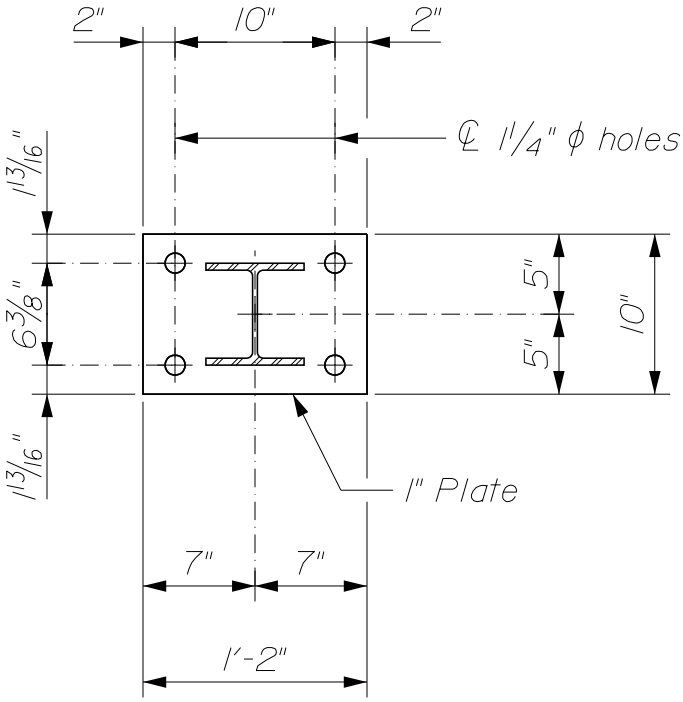

~ POST & BASE PLATE PLAN ~

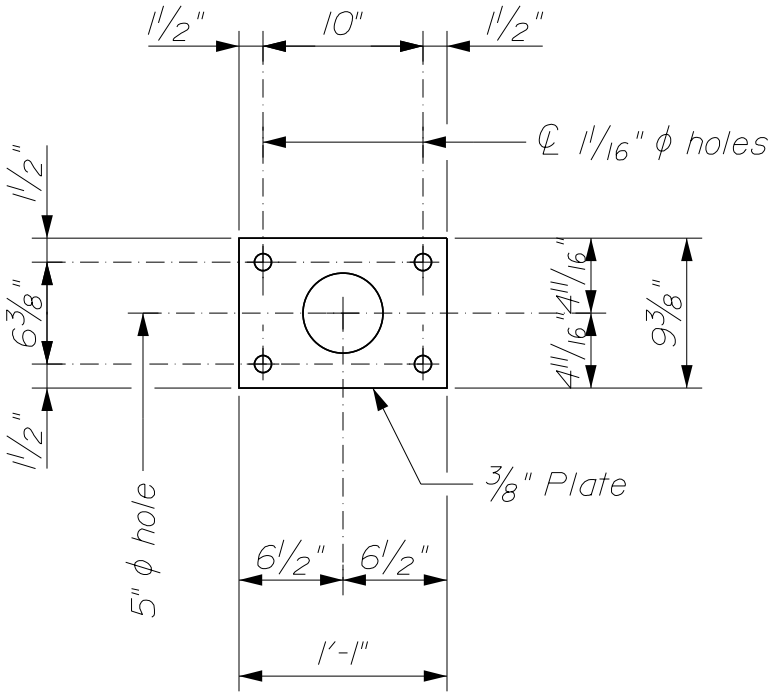

~ ANCHOR PLATE PLAN ~

STEEL BRIDGE RAILING

507(08)

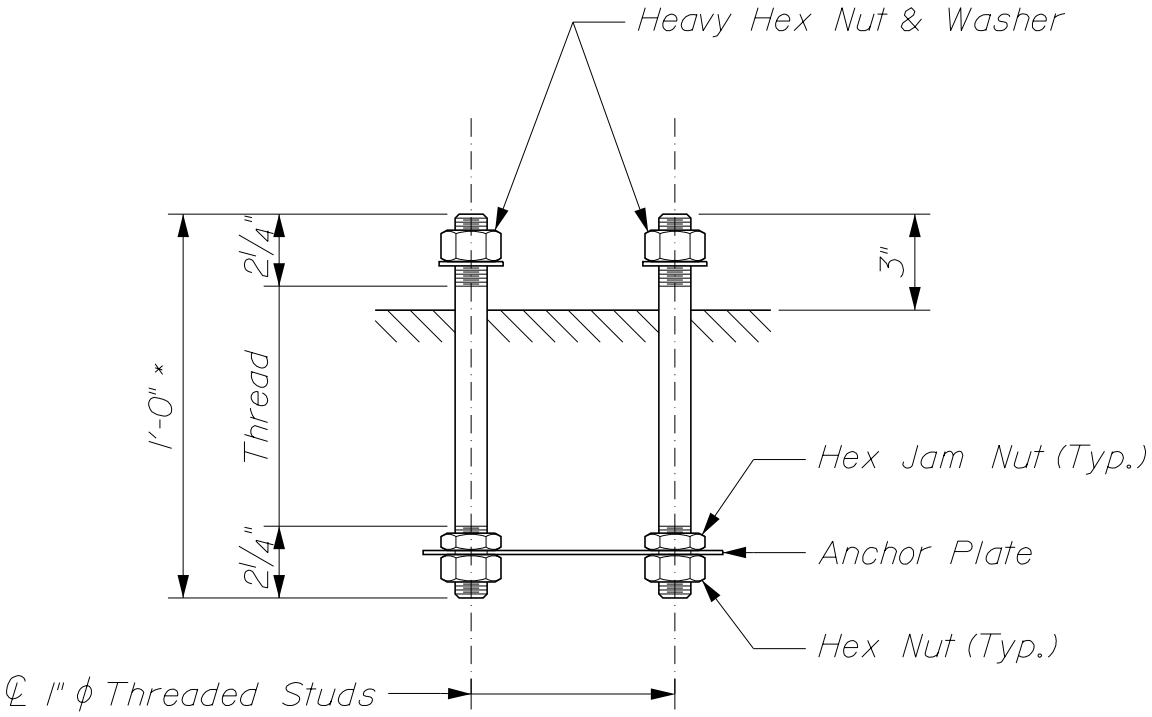

~ RAIL POST ANCHORAGE ~

* = 9" for curb with integral concrete wearing surface.

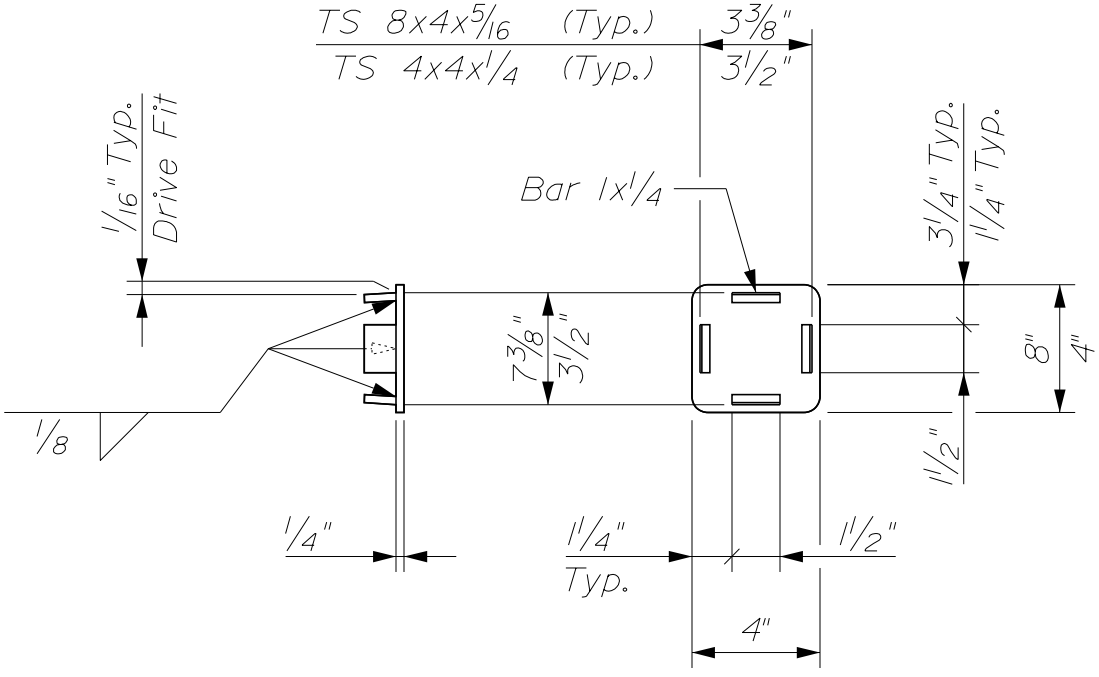

~ RAIL BAR CAP ~

Note: Match corner radius of rail bar

STEEL BRIDGE RAILING

507(09)

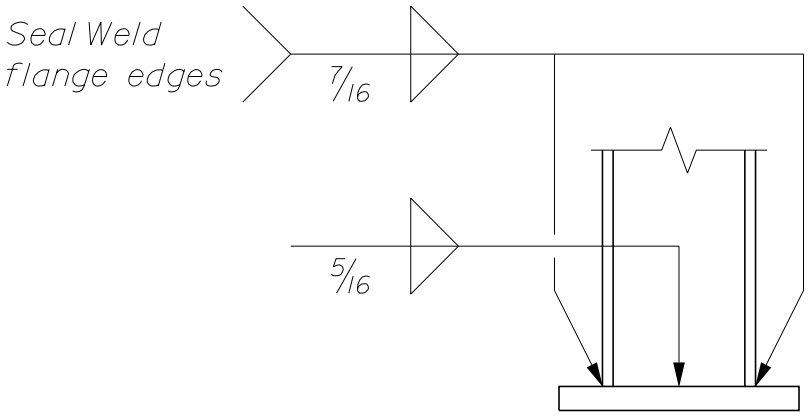

~ POST - TO - BASE WELD DETAIL ~

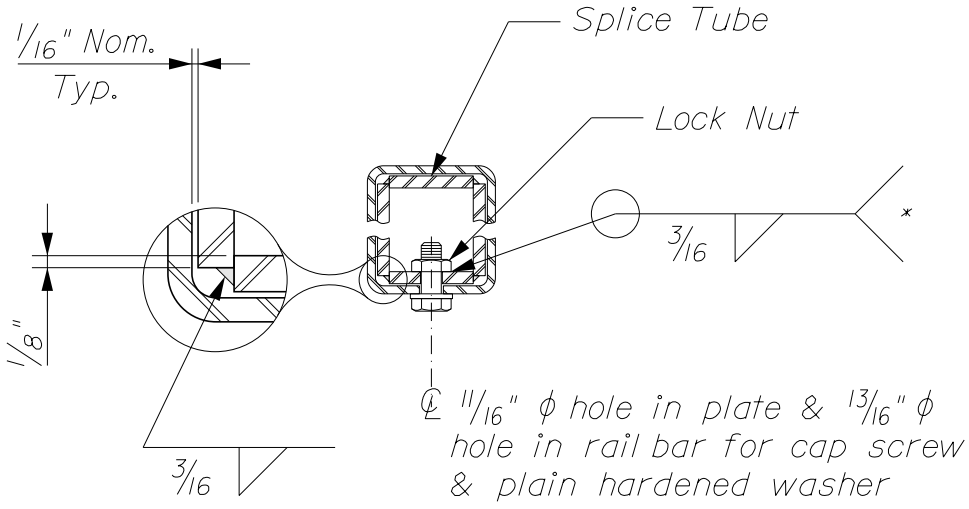

~ RAIL BAR SPLICE SECTION ~

* Weld nuts to plate before assembling splice tube

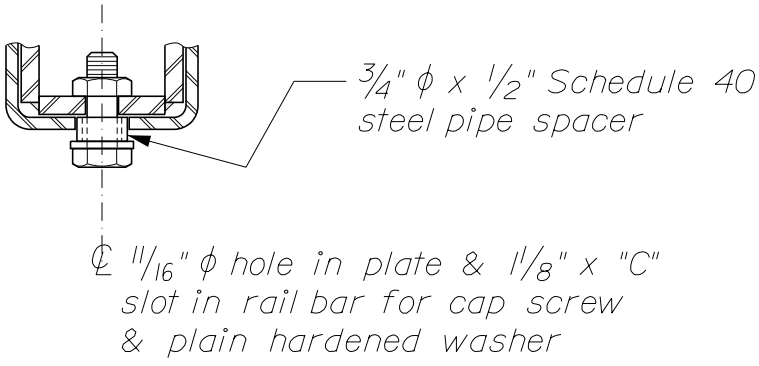

~ RAIL BAR EXPANSION JOINT SECTION ~

For details not shown, see "Rail Bar Splice Section"

STEEL BRIDGE RAILING

507(10)

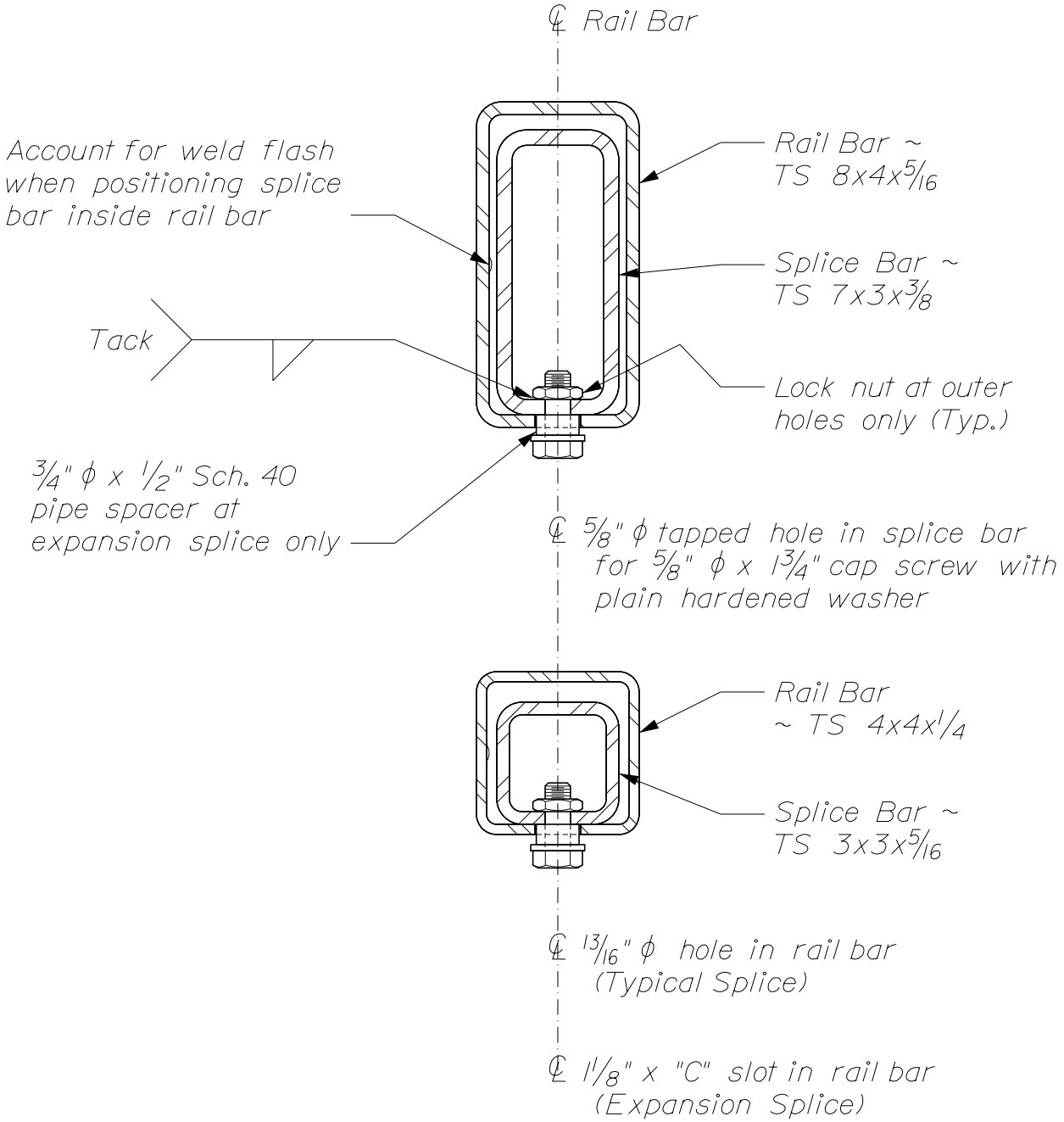

-- OPTIONAL RAIL BAR SPLICE SECTION --
(Details Typical for both rail bars)

STEEL BRIDGE RAILING

507(11)

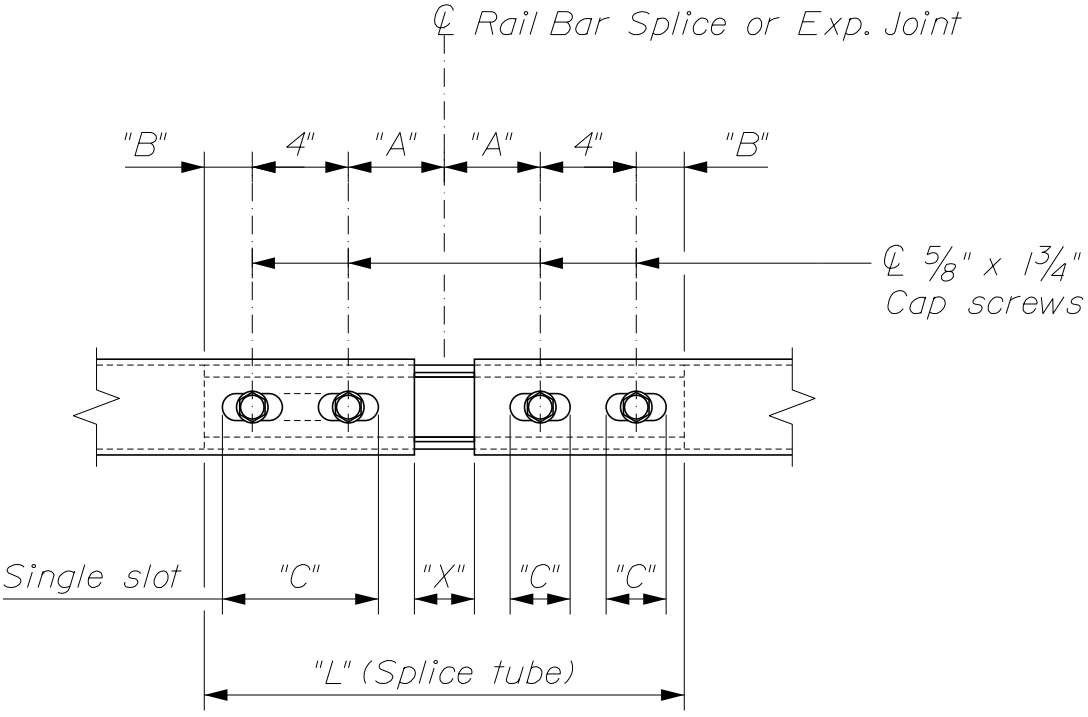

~ RAIL BAR SPLICE & EXPANSION JOINT DETAIL ~
(Bottom View)

SPLICE TUBE DIMENSIONS		
	TS 8x4	TS 4x4
Top & Bot. Plates	2 1/2 x 3/8 x "L"	2 5/8 x 3/8 x "L"
Side Plates	6 3/4 x 3/8 x "L"	2 7/8 x 3/8 x "L"

SPLICE & EXPANSION JOINT TABLE					
"T"	"A"	"B"	"C"	"L"	"X"
Splice	4"	2"	--	1'-8"	3/4"
≤ 4"	4"	2"	2 1/2"	1'-8"	2 1/2"
> 4" ≤ 6 1/2"	5 1/2"	2 1/2"	3 1/2"	2'-0"	3 3/4"
> 6 1/2" ≤ 9"	6 1/2"	3 1/2"	9" *	2'-4"	5"
> 9" ≤ 13"	8 1/2"	4 1/2"	11" *	2'-10"	7"

T = Total Movement

* = Single Slot

STEEL BRIDGE RAILING

507(12)

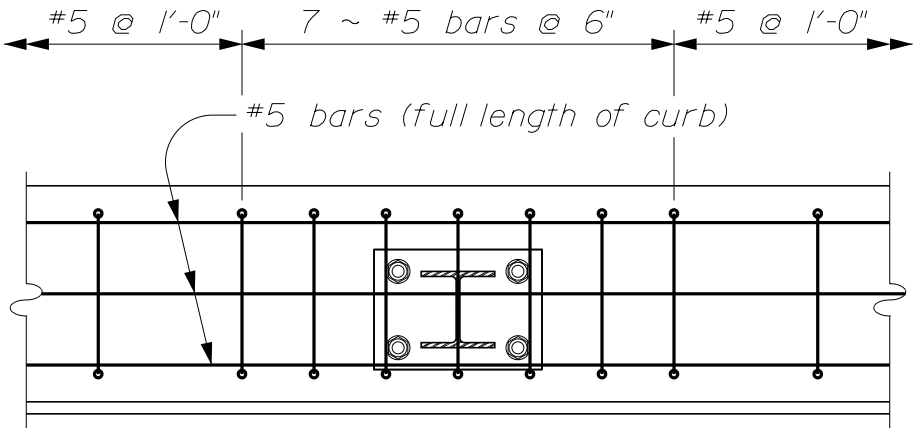

~ CURB REINFORCING PLAN ~

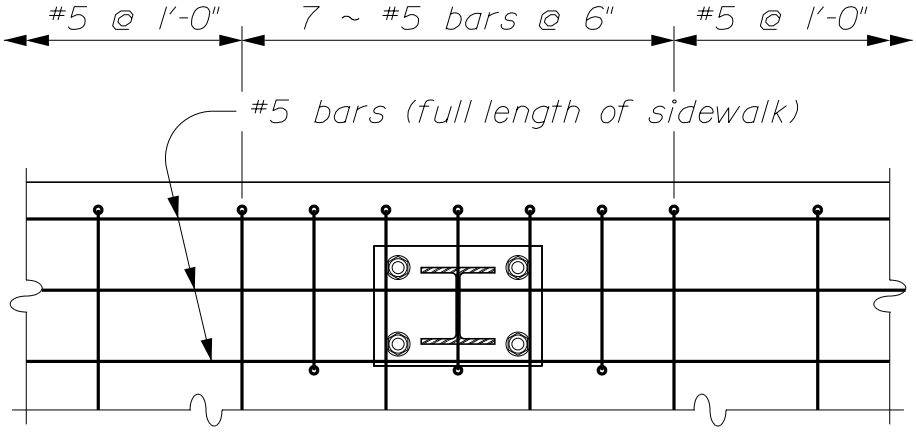

~ SIDEWALK REINFORCING PLAN ~

STEEL BRIDGE RAILING

507(13)

NOTES:

1. All work and materials shall conform to the provisions of Section 507 - Railings of the Standard Specifications.

2. Tubing shall meet the longitudinal CVN minimum requirements of 15 ft-lb at 0° F or proportional values of sub - size specimens. Testing shall be done in accordance with ASTM A 673. The H frequency shall be used and the material shall be as - rolled.

3. All exposed cut or sheared edges shall be broken and free of burrs. The inside weld flash of tubing shall be removed at splices and expansion joints.

4. Rail posts shall be set normal to grade unless otherwise shown.

5. Lengths of rail bar shall be attached to a minimum of 2 rail posts and to at least 4 posts whenever possible.

6. Rail bar expansion joints shall be provided in any rail bay spanning a superstructure expansion joint. Expansion joint width shall be "X" at 45° F and will be adjusted in the field as directed by the Resident. Refer to detail and table on page 507(12) for dimension "X".

7. All parts shall be galvanized after fabrication in accordance with ASTM A 123, except that hardware shall meet the requirements of either ASTM A 153 or ASTM B 695, Class 50, Type 1. Parts except hardware shall be blast - cleaned prior to galvanizing in accordance with SSPC - SP6.

8. Anchor bolts shall be set with a template. Nuts securing the post base plate shall be tightened to a snug fit and given an additional 1/8 turn.

9. Bolts for attaching rail bars to posts shall be round or dome head and may be rib neck, slotted, wrench head or tension control (TC or twist - off). Holes in posts shall be 1/16 inch larger than the diameter of the bolt. Holes in rail bars shall be drilled to size as follows:

Slotted, wrench head or TC bolts: 1/16" larger than bolt diameter
Rib neck bolts: Size appropriate to accomodate an interference fit

Bolts shall be 6 inches in length and shall include a flat washer under the nut.

(Continued)

NOTES (Continued):

10. Holes in rail bars shall be field - drilled and shall be coated with an approved zinc - rich paint prior to erection.

11. Bolts in expansion joints shall be tightened only to a point that will allow rail movement.

12. The alternate curb projection shown for the curb - mounted railings is intended for use with granite bridge curb.

13. If there is a conflict between these Standard Details and the Design Drawings, the Contractor shall notify the Resident immediately.

MATERIALS:

Rail bars & rail splice bars	ASTM A 500, Grade B
Rail posts, base plates & fabricated splice bars	AASHTO M 270M/M 270, Grade 50
All other shapes & plates	ASTM A 36/ A 36M
Anchor bolts, washers & heavy hex nuts	AASHTO M 314, Grade 105
Rail attachment bolts	ASTM A 449
All other bolts & nuts (unless noted)	ASTM A 307 & ASTM A 563, Grade D or DH

STEEL BRIDGE RAILING

507(15)

STEEL APPROACH RAILING, 2-BAR

507(16)

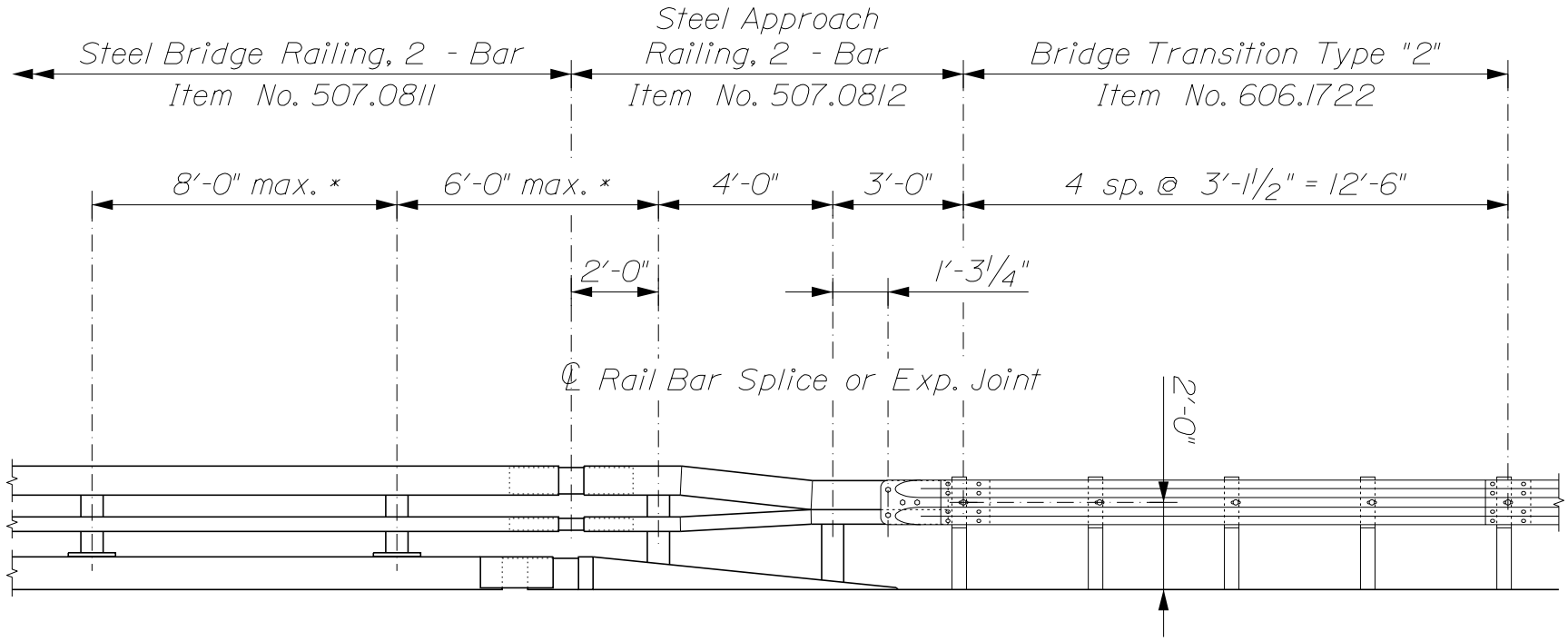

~ ELEVATION ~

* See Design Drawings for dimensions

NOTES:

1. The bottom rail bar may be bent to shape from one continuous length of stock provided that the fabricator can achieve the required geometry without deforming the tube.

2. To facilitate field fit - up of the approach railing, posts shall be set loosely into fiber form tubes while parts are being assembled. Post holes shall be backfilled with Class "S" or other concrete mix approved by the Resident. Payment will be considered incidental to the Steel Approach Railing pay item.

STEEL APPROACH RAILING, 2-BAR

507(17)

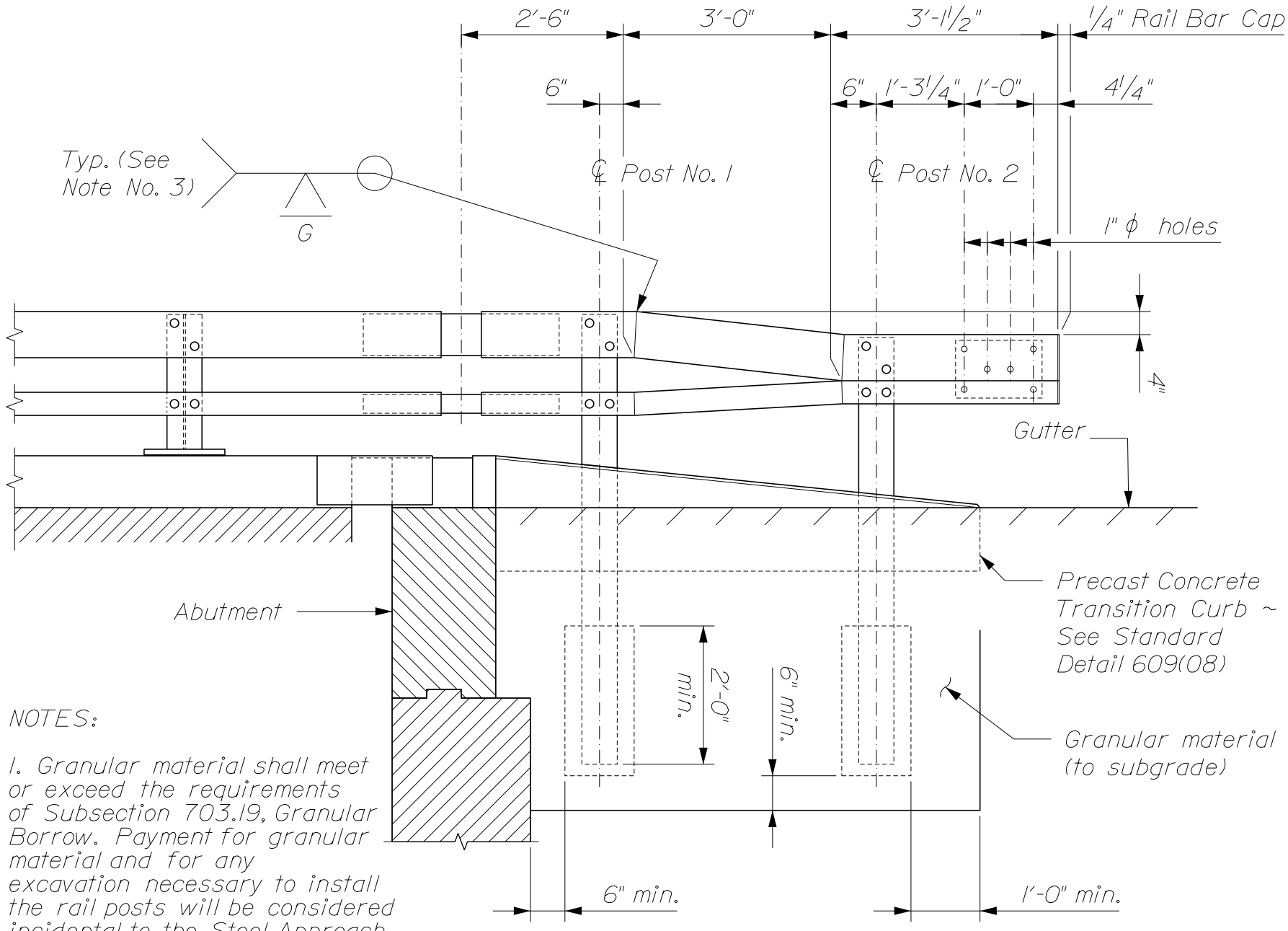

NOTES:

1. Granular material shall meet or exceed the requirements of Subsection 703.19, Granular Borrow. Payment for granular material and for any excavation necessary to install the rail posts will be considered incidental to the Steel Approach Railing pay item.

~ ELEVATION ~

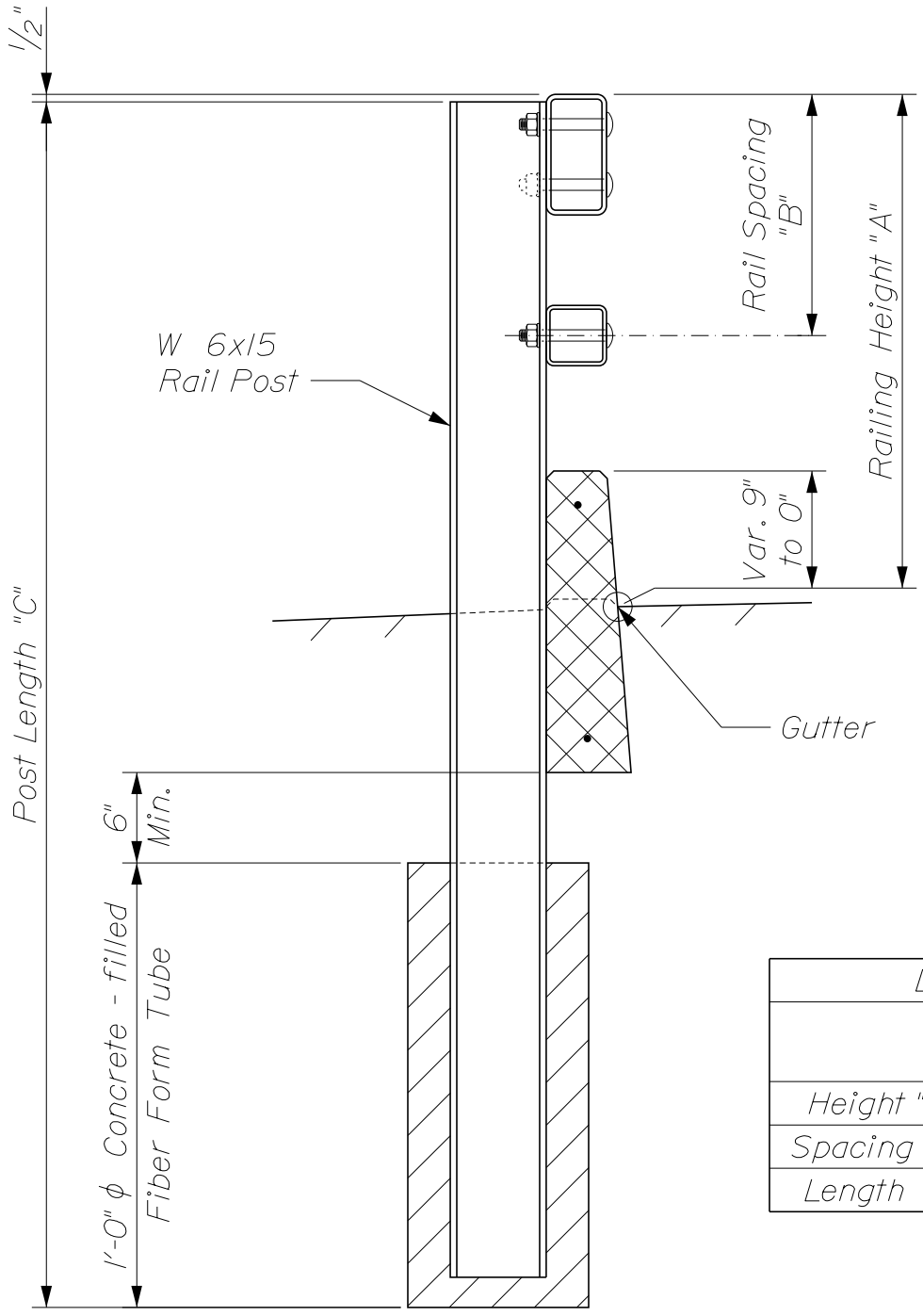

DIMENSIONS		
	Post No. 1	Post No. 2
Height "A"	2'-10"	2'-6"
Spacing "B"	1'-4"	10"
Length "C"	6'-6"	6'-2"

~ TYPICAL SECTION ~

STEEL APPROACH RAILING, 2-BAR

507(18)

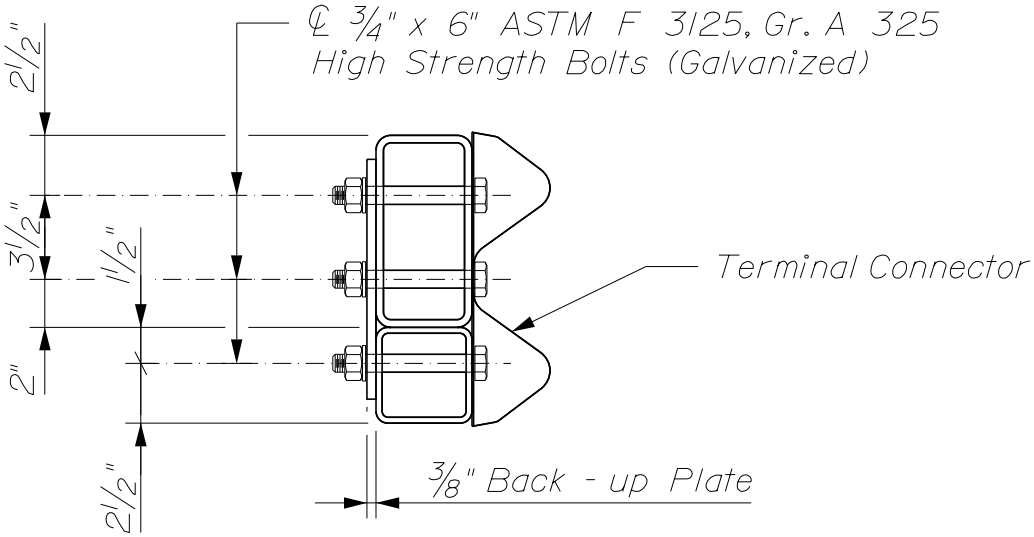

~ SECTION THROUGH
TERMINAL CONNECTOR ~

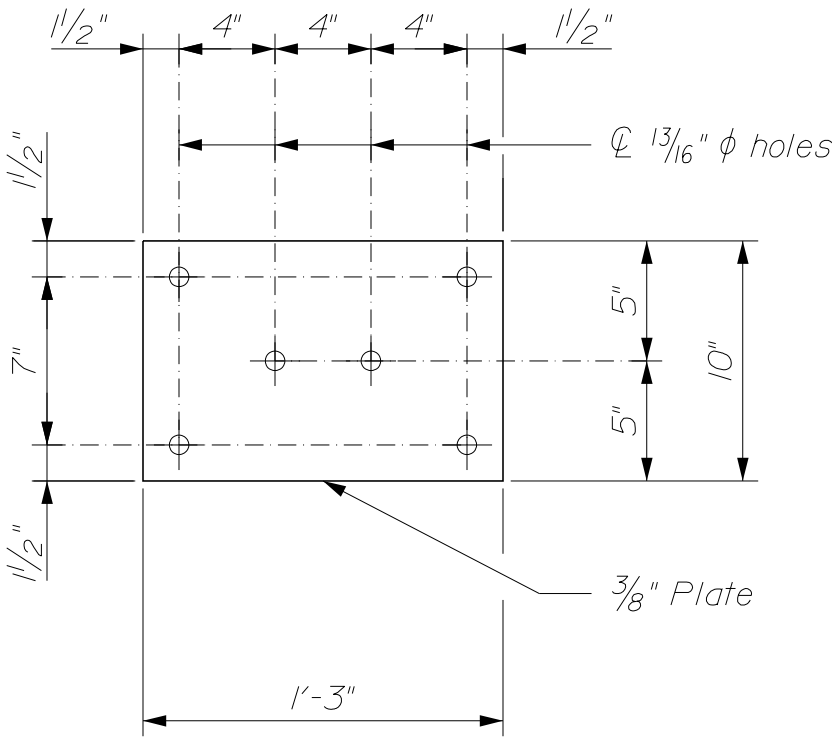

~ BACK - UP PLATE ~

NOTES:

1. The Bridge Transition Type "2" as shown is a slight modification of the standard Type "2" detail shown in Section 606. The 3/4" ϕ bolts and back - up plate will be considered as part of the Steel Approach Railing pay item.

STEEL APPROACH RAILING, 2-BAR

507(19)

STEEL APPROACH RAILING, 3-BAR

507(20)

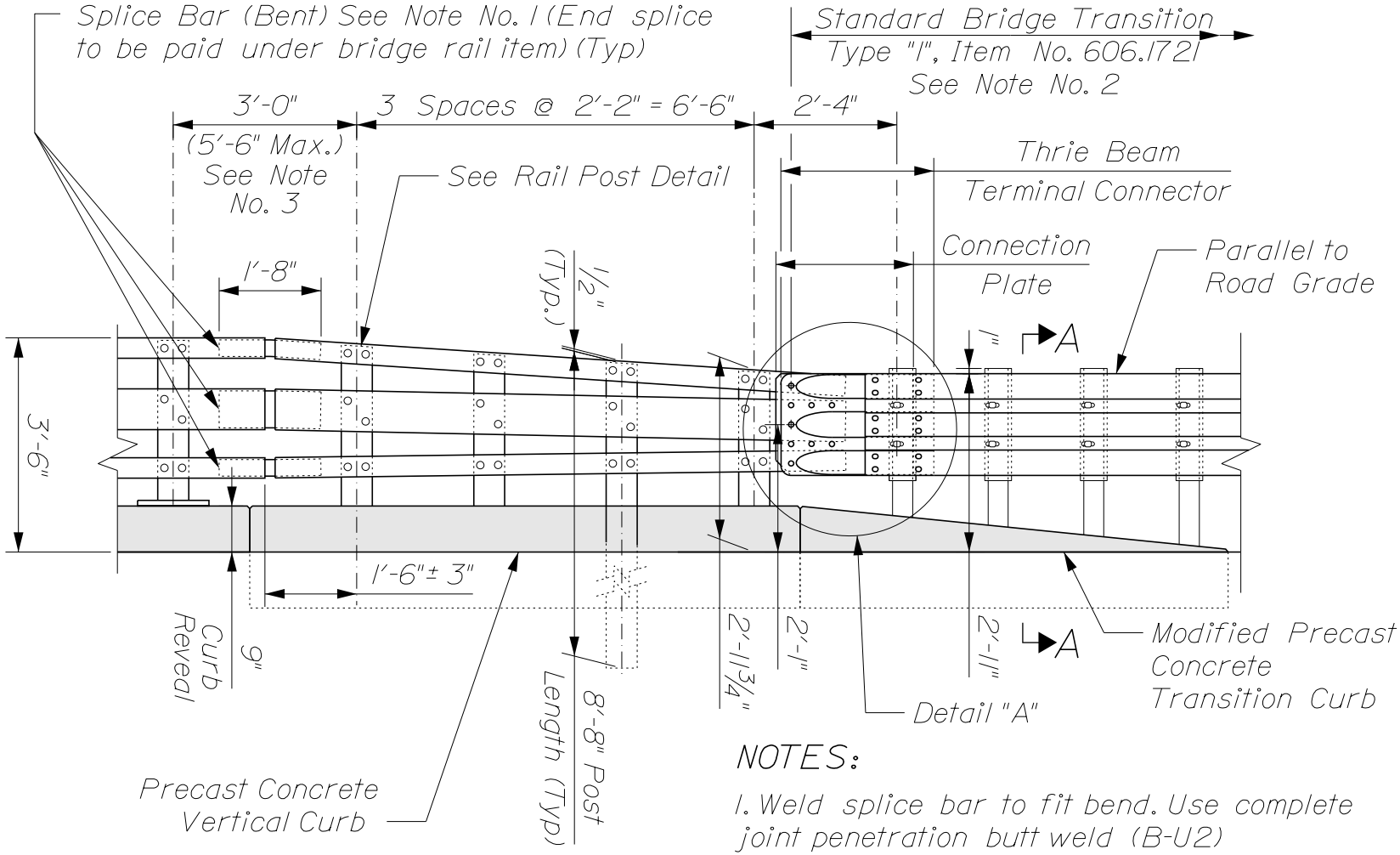

~ ELEVATION ~

NOTES:

1. Weld splice bar to fit bend. Use complete joint penetration butt weld (B-U2)

2. Standard Bridge Transition may require longer posts to account for higher rail height. No additional payment will be made for this modification.

3. Three foot spacing to first post on bridge is standard. For longer expansion joints, the first post on the bridge may be located up to 5'-6" from the previous post in the approach.

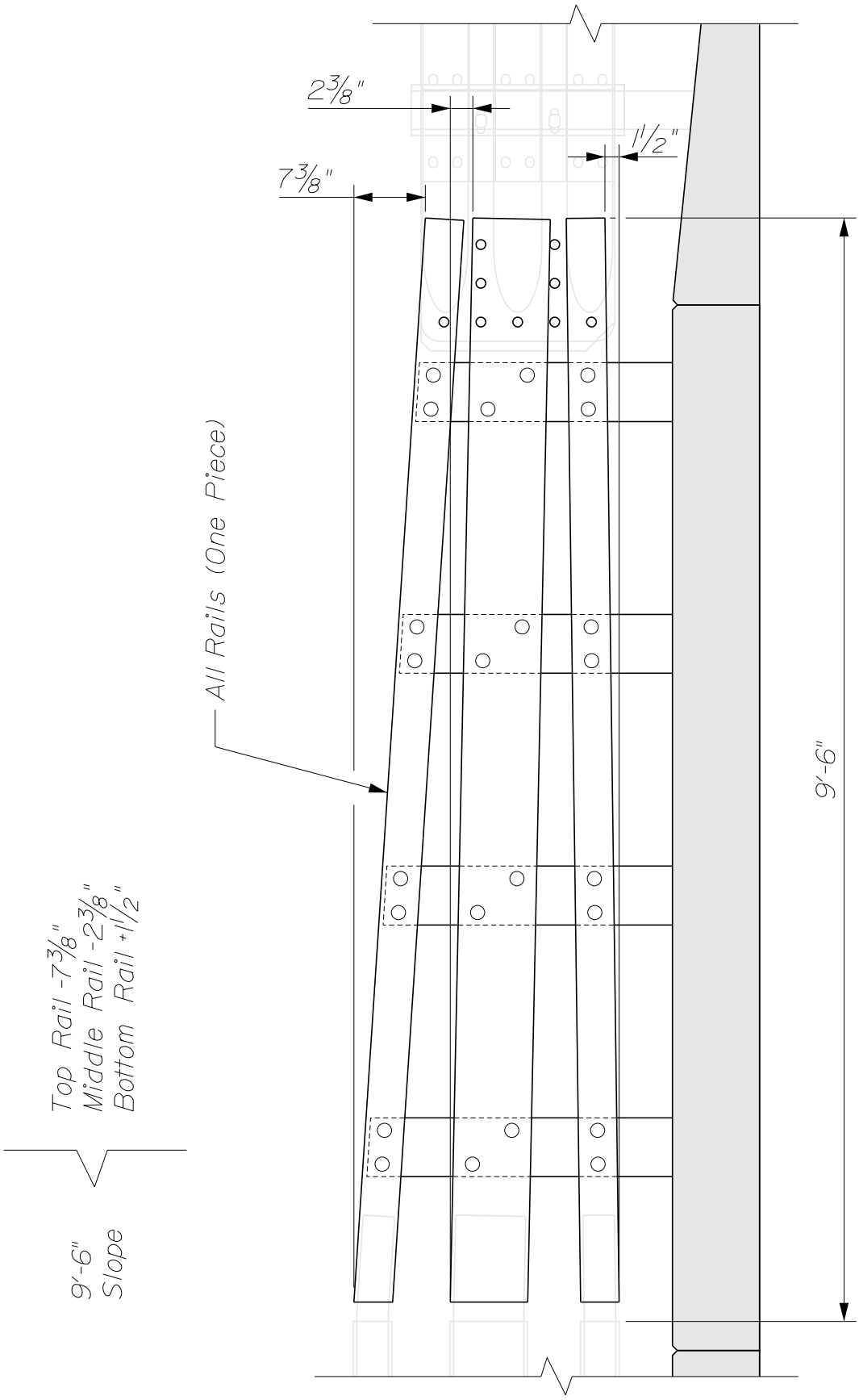

~ DETAIL - RAIL SLOPE ~

STEEL APPROACH RAILING, 3-BAR

507(21)

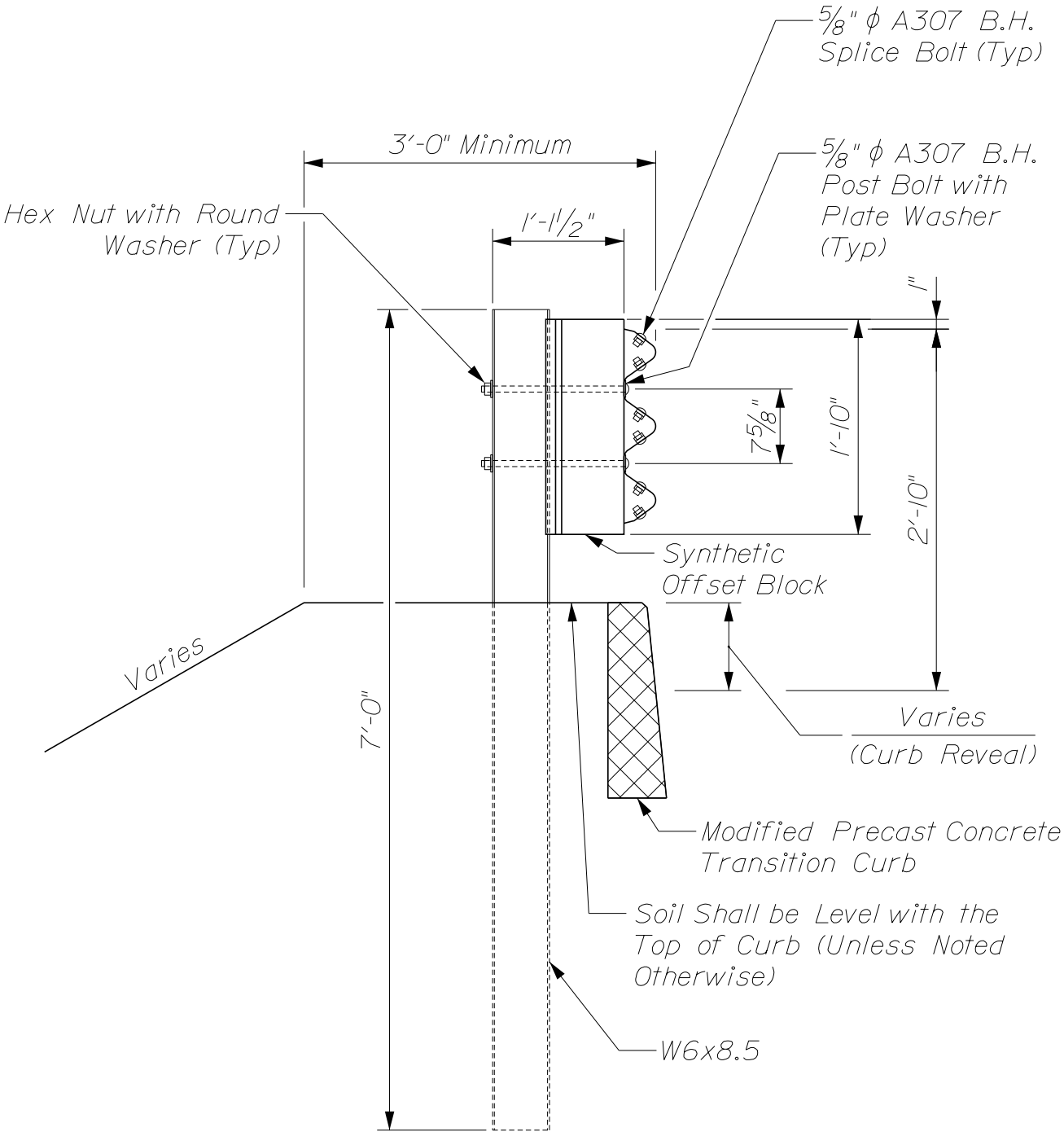

~ SECTION A-A ~
(POST RAIL ASSEMBLY)

STEEL APPROACH RAILING, 3-BAR

507(22)

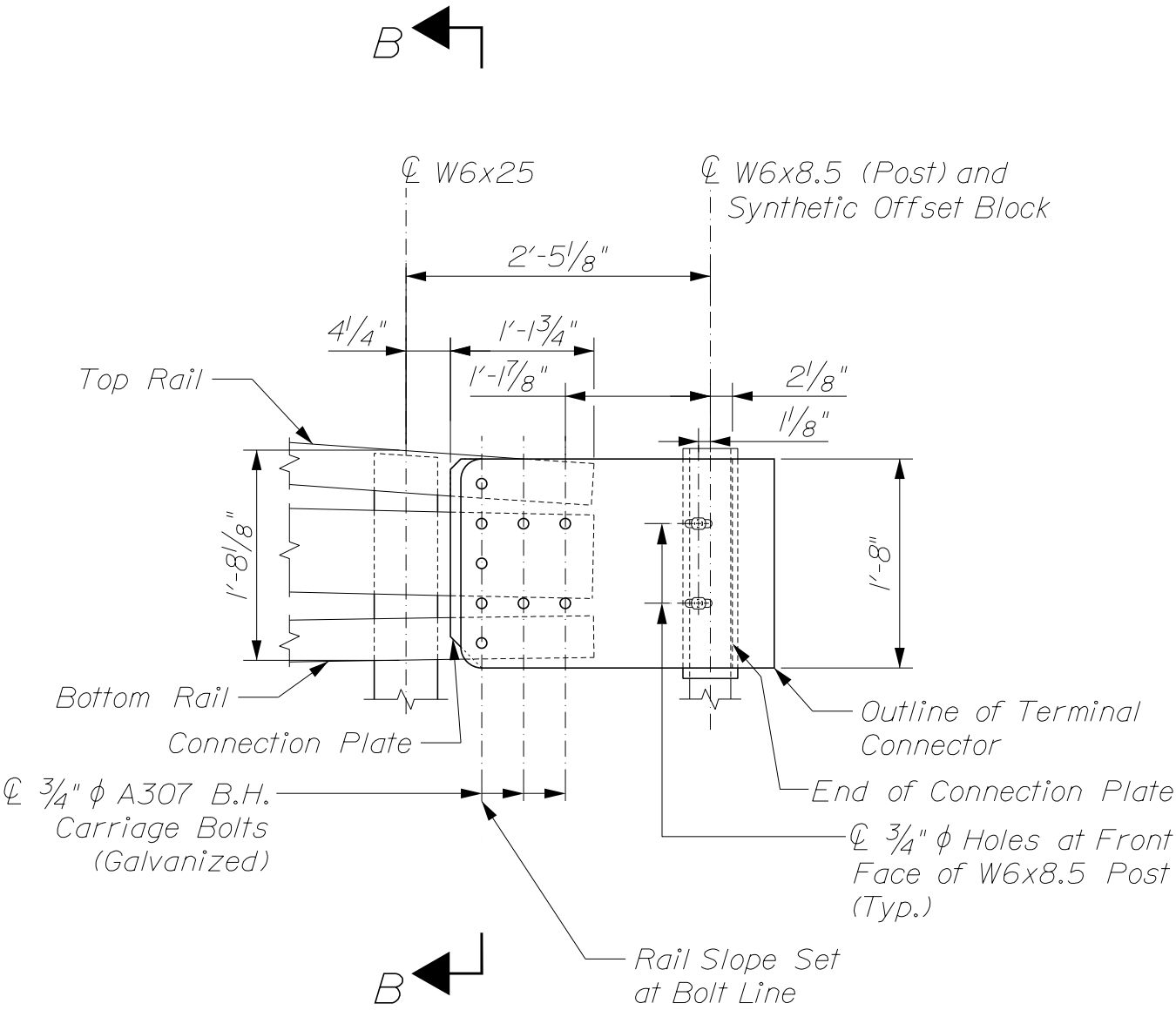

~ DETAIL "A" ~

(Overlapping of Double Nested Thrie-Beam not Shown for Clarity)

STEEL APPROACH RAILING, 3-BAR

507(23)

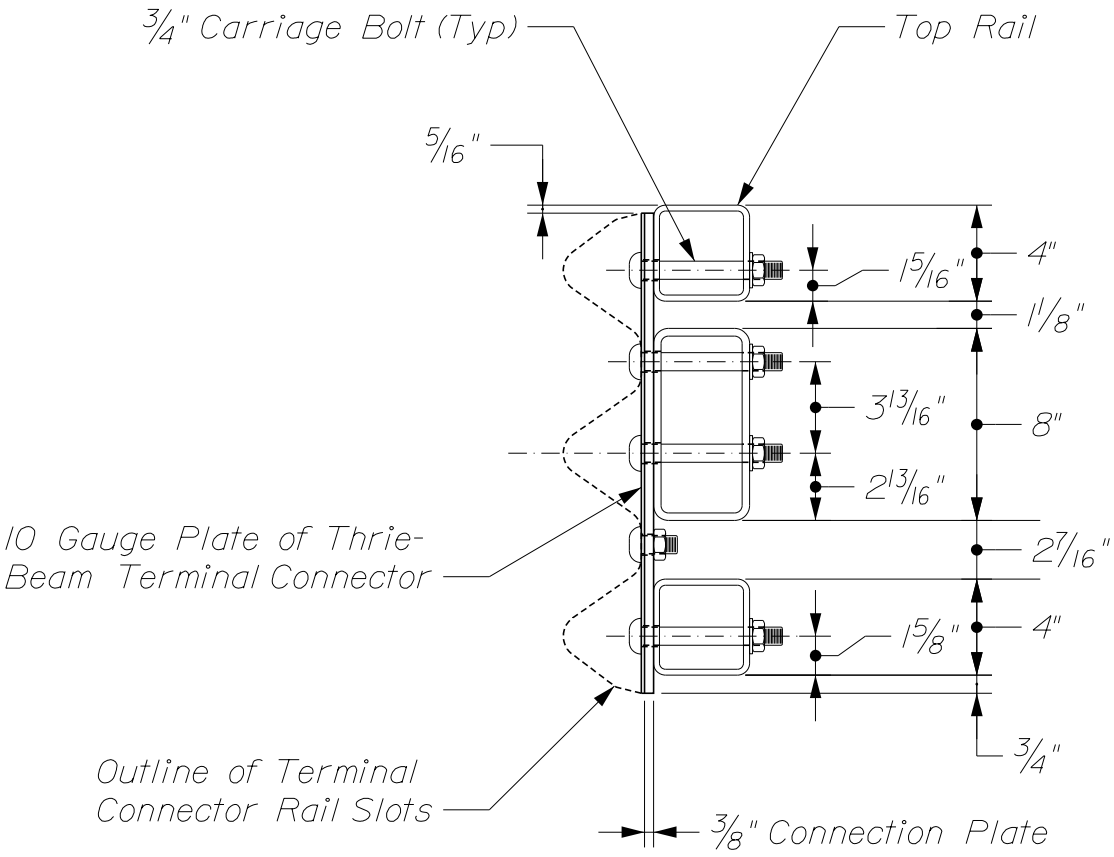

~ SECTION B-B (CONNECTION PLATE) ~

STEEL APPROACH RAILING, 3-BAR

507(24)

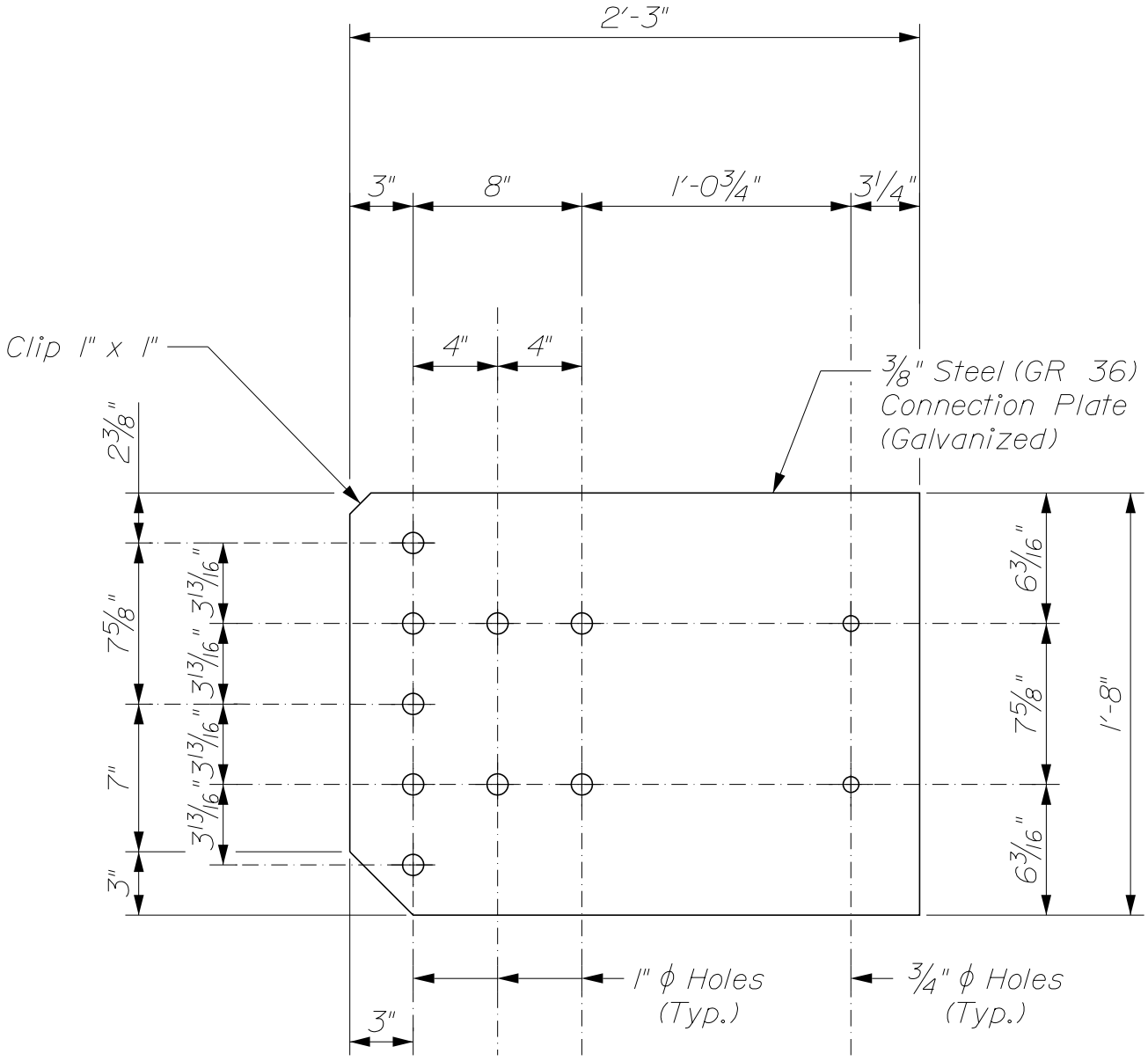

~ DETAIL - CONNECTION PLATE ~

STEEL APPROACH RAILING, 3-BAR

507(25)

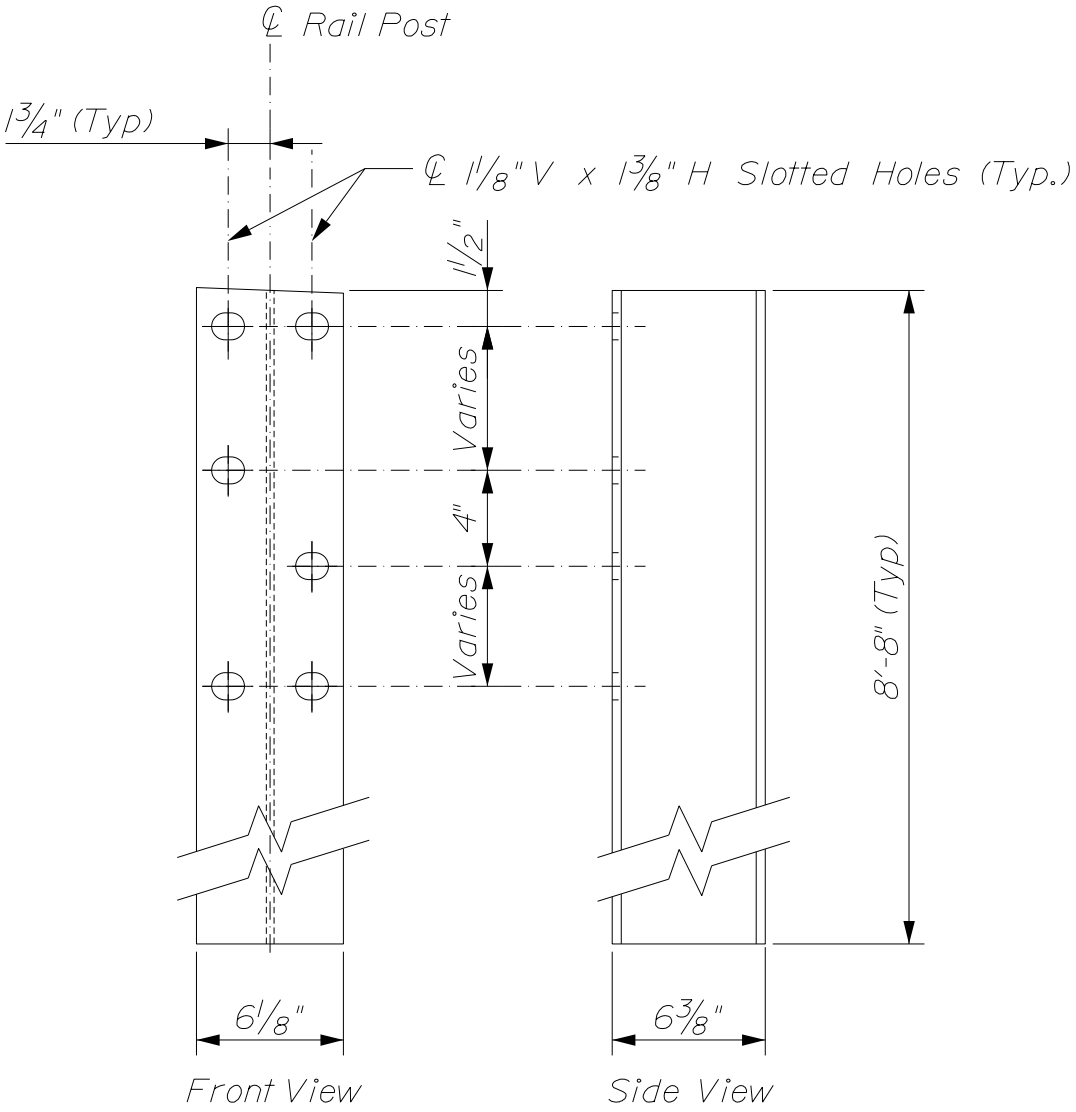

~ DETAIL - RAIL POST (W6x25) ~

STEEL APPROACH RAILING, 3-BAR

507(26)

NOTES:

1. Refer to Steel Bridge Railing pages for additional details, notes and materials specifications.

2. Rail bar welds shall have a minimum penetration of 80% as demonstrated by a test weld performed by the fabricator.

3. The precast concrete vertical or transition curb shall meet the provisions of Section 609 - Curbing of the Standard Specifications. The bridge end of the curb shall be saw - cut in the field to fit flush against the backwall, as dictated by the bridge skew angle and the profile grade. Where curbing is specified on the adjacent highway, the transition shall be modified accordingly. Payment for transition curb will be considered incidental to the Steel Approach Railing pay item.

4. After installation of the guard rail is complete, upset the threads on the anchor bolts in three (3) places around each bolt, at the junction of the nut and the exposed thread, with a center punch or similar tool.

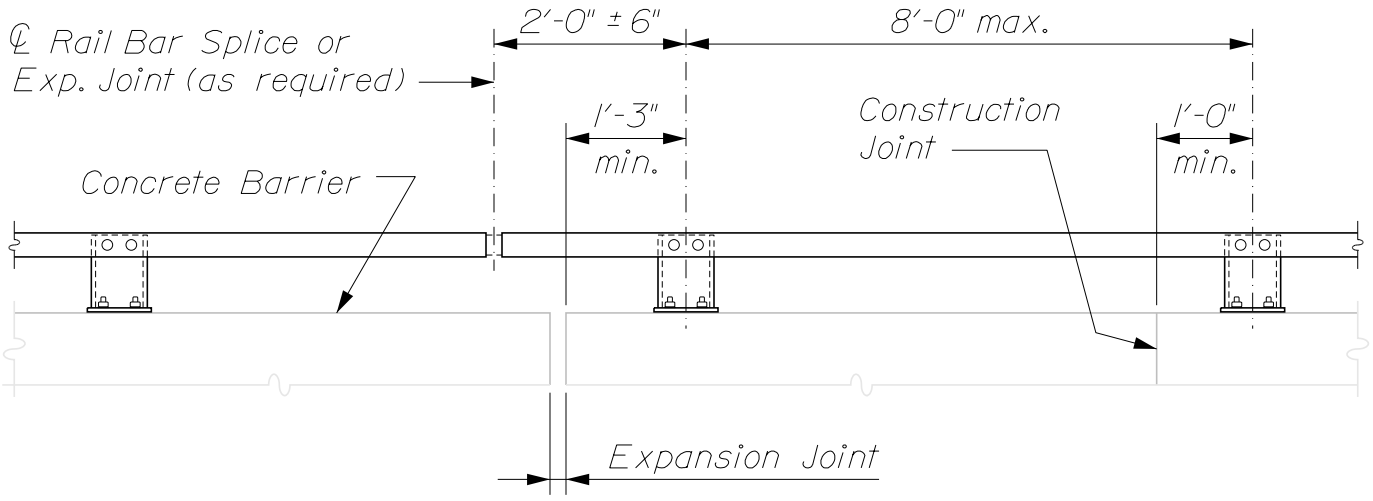

~ 1 - BAR PEDESTRIAN RAILING ~

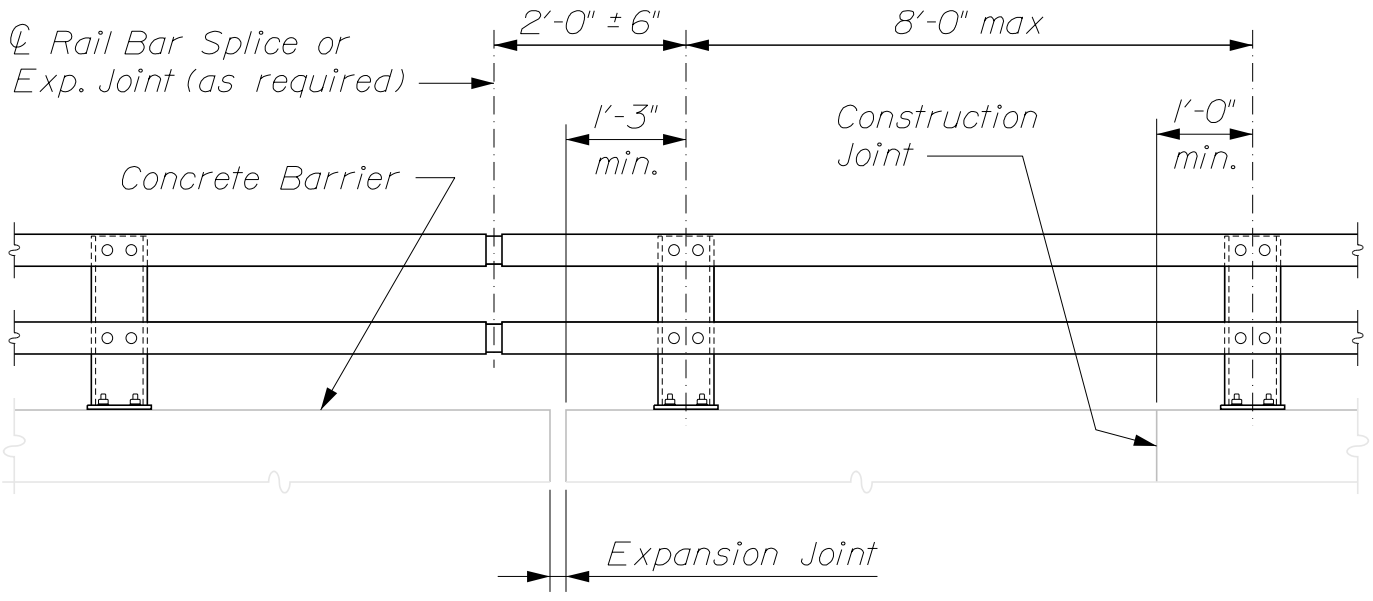

~ 2 - BAR BICYCLE RAILING ~

BARRIER - MOUNTED STEEL BRIDGE RAILING

507(28)

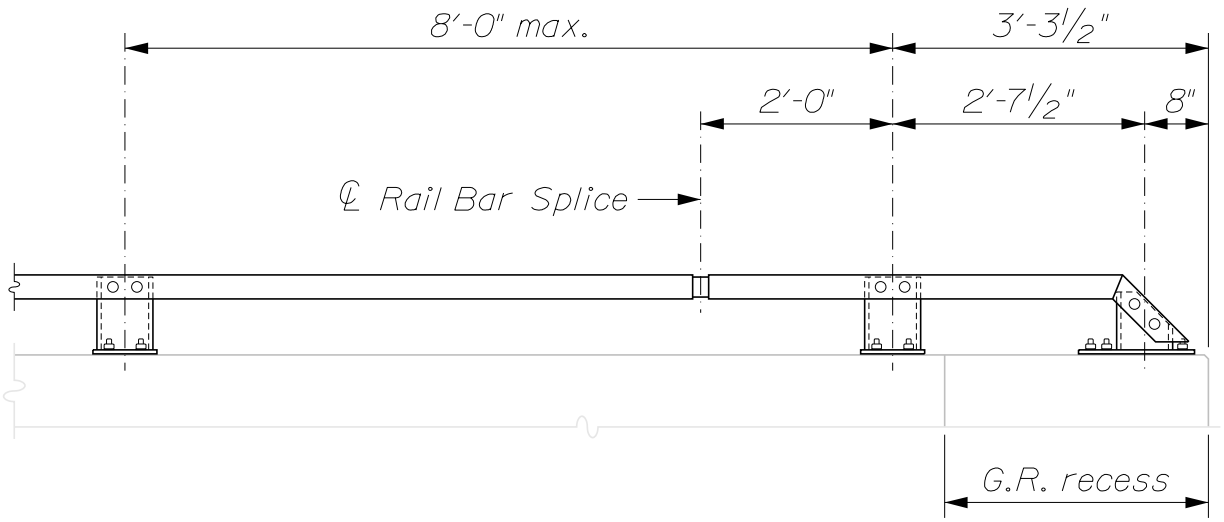

~ 1 - BAR PEDESTRIAN RAILING ~
(Showing End Treatment)

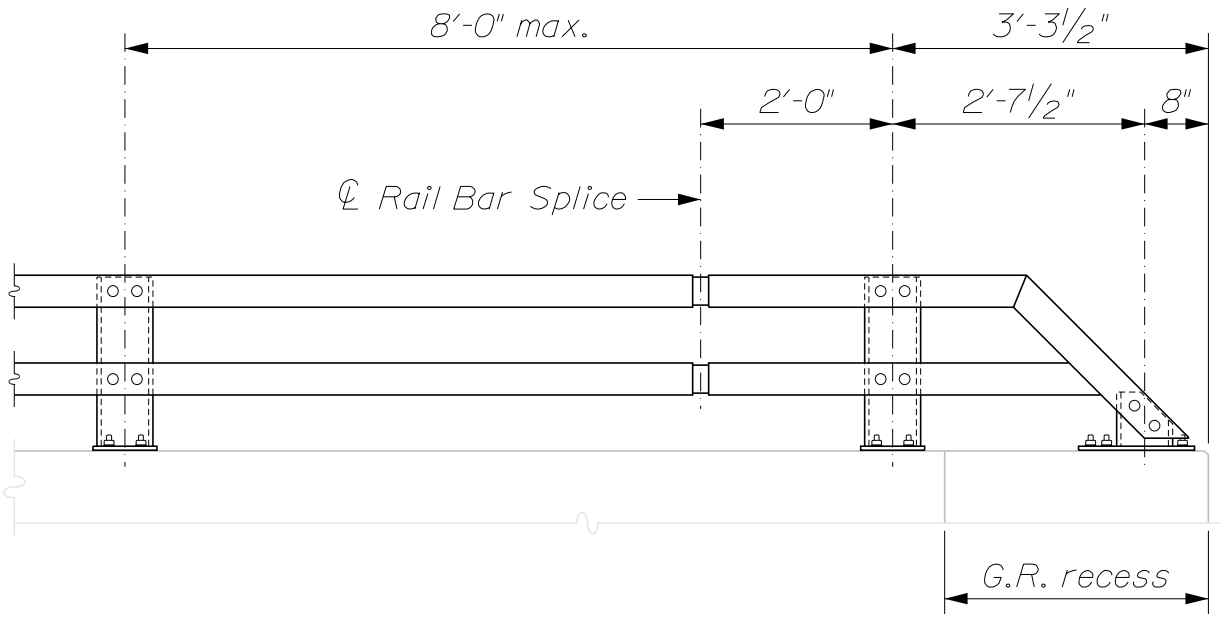

~ 2 - BAR BICYCLE RAILING ~
(Showing End Treatment)

BARRIER - MOUNTED STEEL BRIDGE RAILING

507(29)

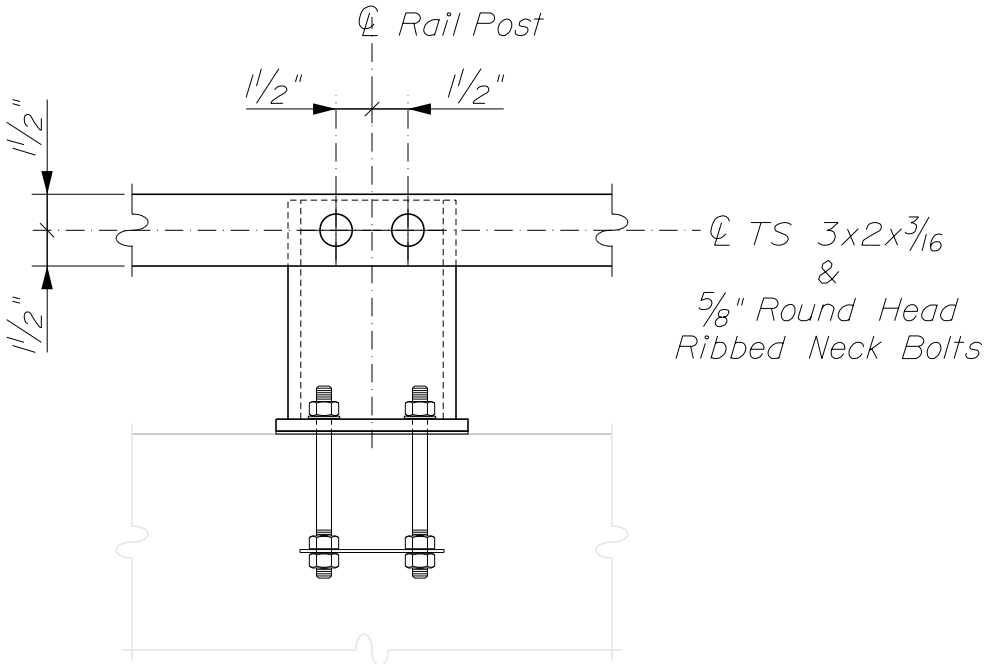

~ RAIL & POST ELEVATION ~
(1 - Bar Pedestrian Railing)

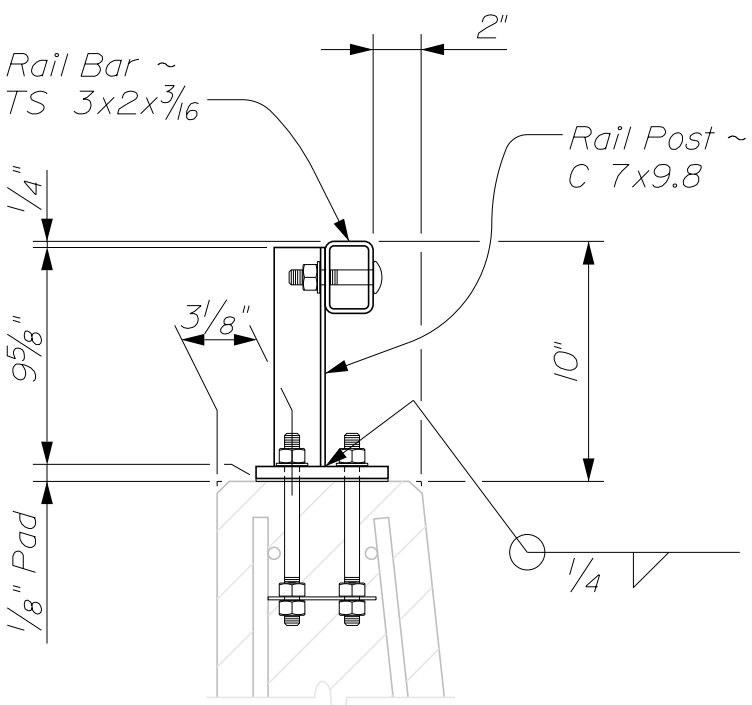

~ TYPICAL RAIL SECTION ~
(1 - Bar Pedestrian Railing)

BARRIER - MOUNTED STEEL BRIDGE RAILING

507(30)

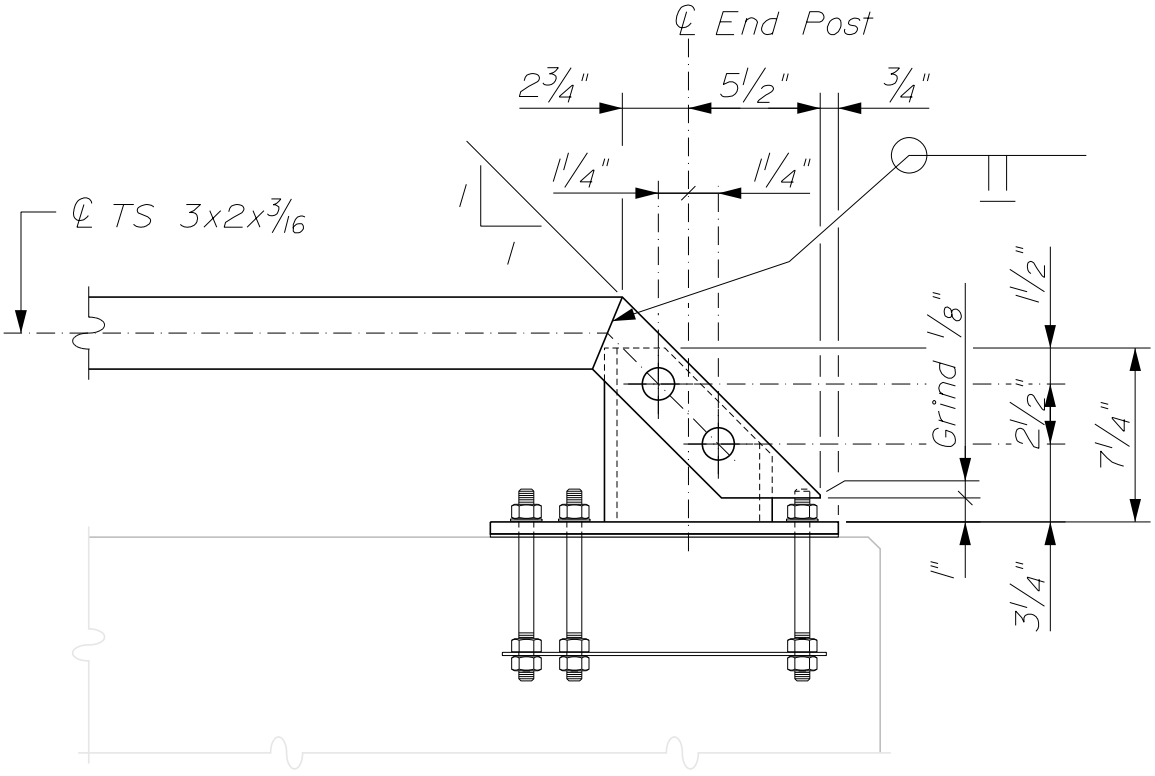

~ RAIL END TREATMENT ~
(1 - Bar Pedestrian Railing)

BARRIER - MOUNTED STEEL BRIDGE RAILING

507(31)

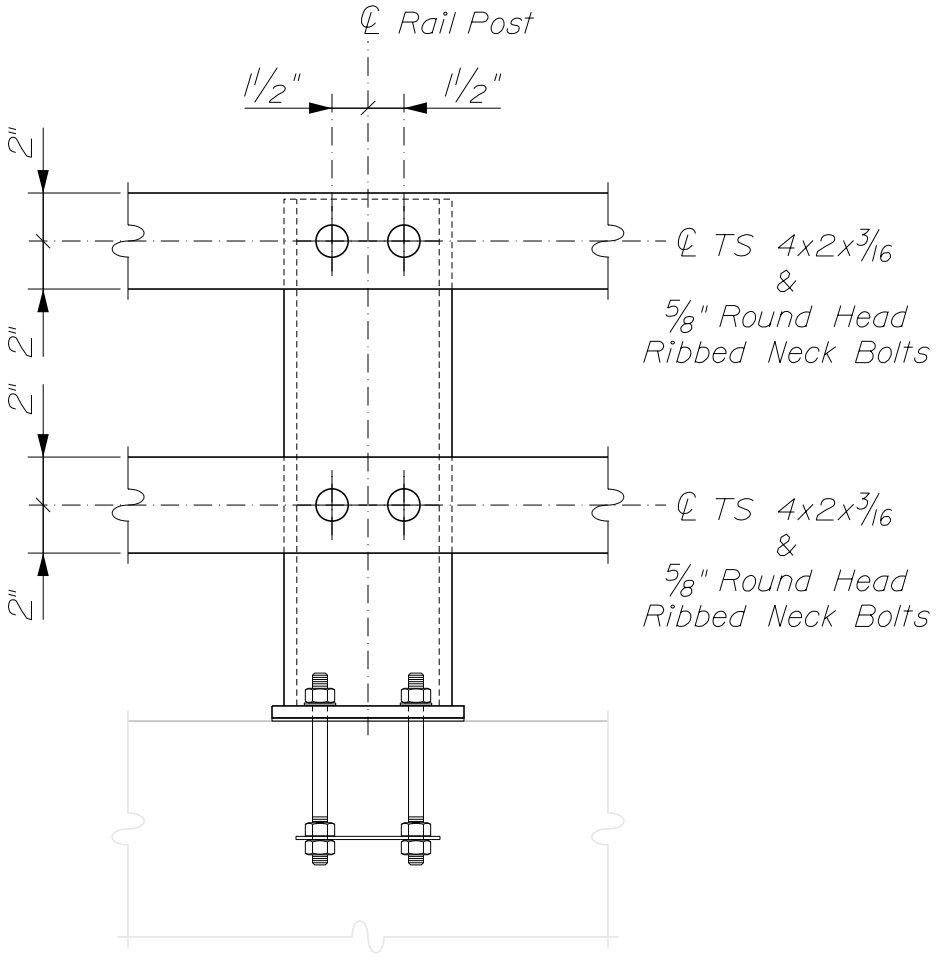

~ RAIL & POST ELEVATION ~
(2 - Bar Bicycle Railing)

BARRIER - MOUNTED STEEL BRIDGE RAILING

507(32)

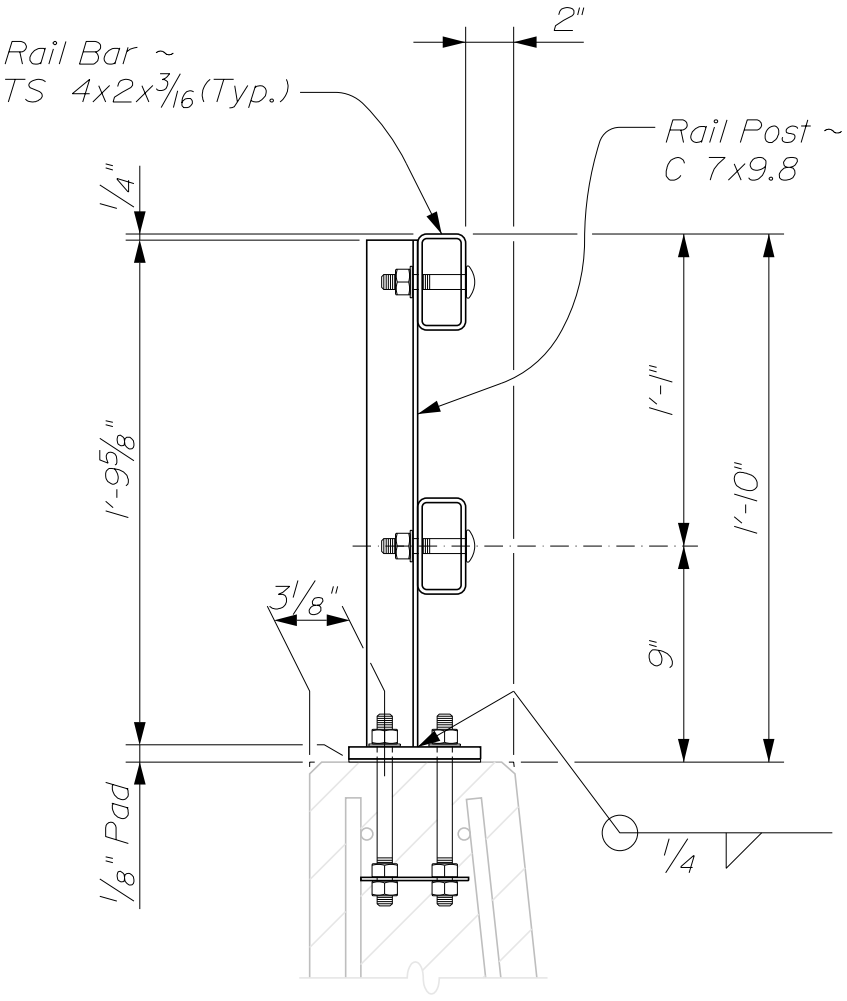

~ TYPICAL RAIL SECTION ~
(2 - Bar Bicycle Railing)

BARRIER - MOUNTED STEEL BRIDGE RAILING

507(33)

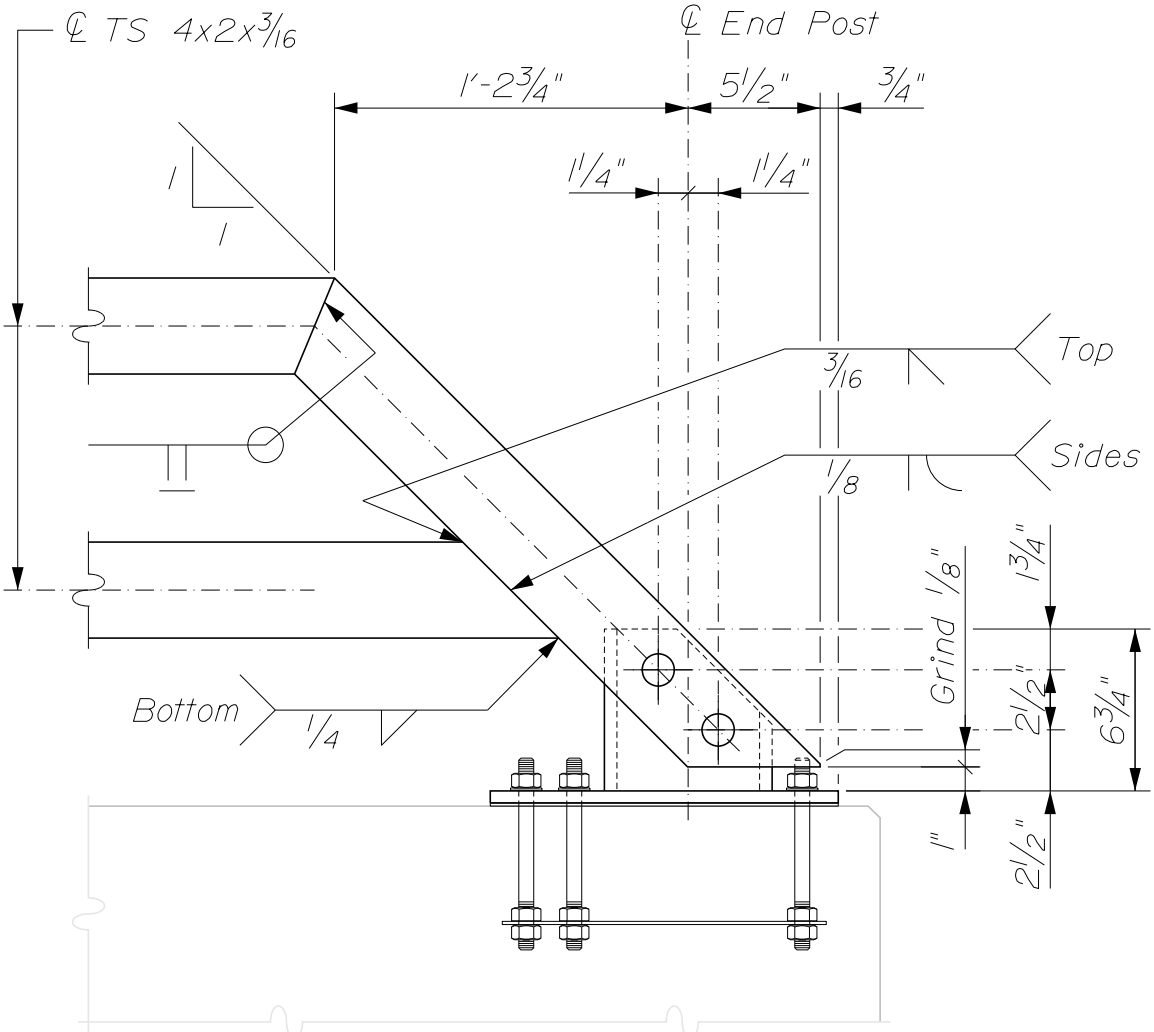

~ RAIL END TREATMENT ~
(2 - Bar Bicycle Railing)

BARRIER - MOUNTED STEEL BRIDGE RAILING

507(34)

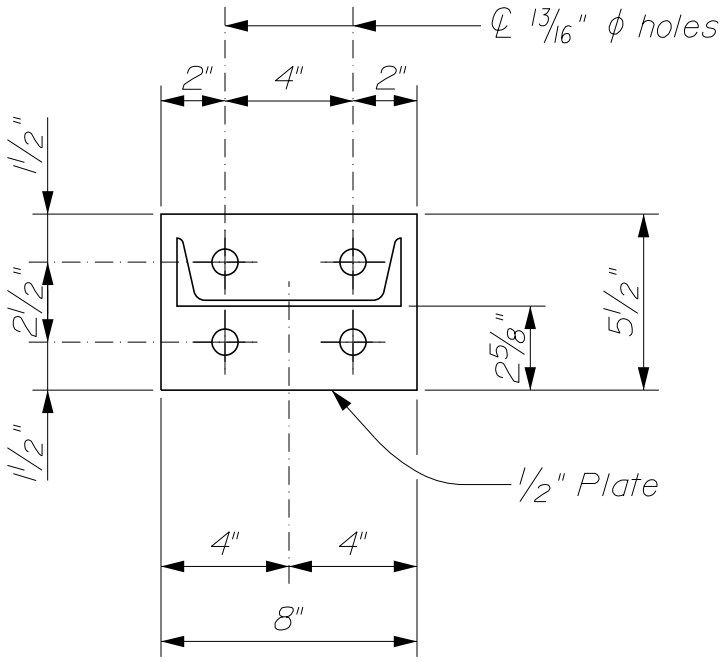

~ POST & BASE PLATE PLAN ~

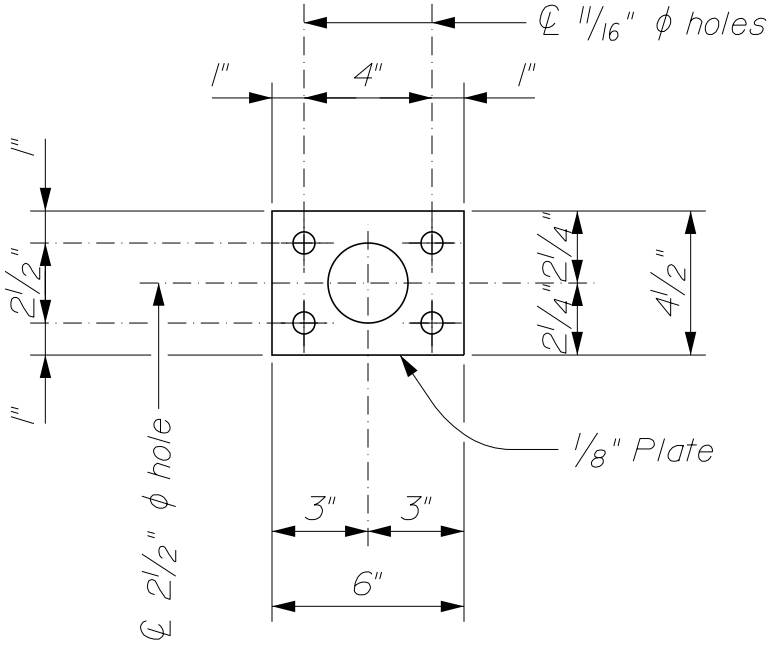

~ SPACER PLATE PLAN ~

BARRIER - MOUNTED STEEL BRIDGE RAILING

507(35)

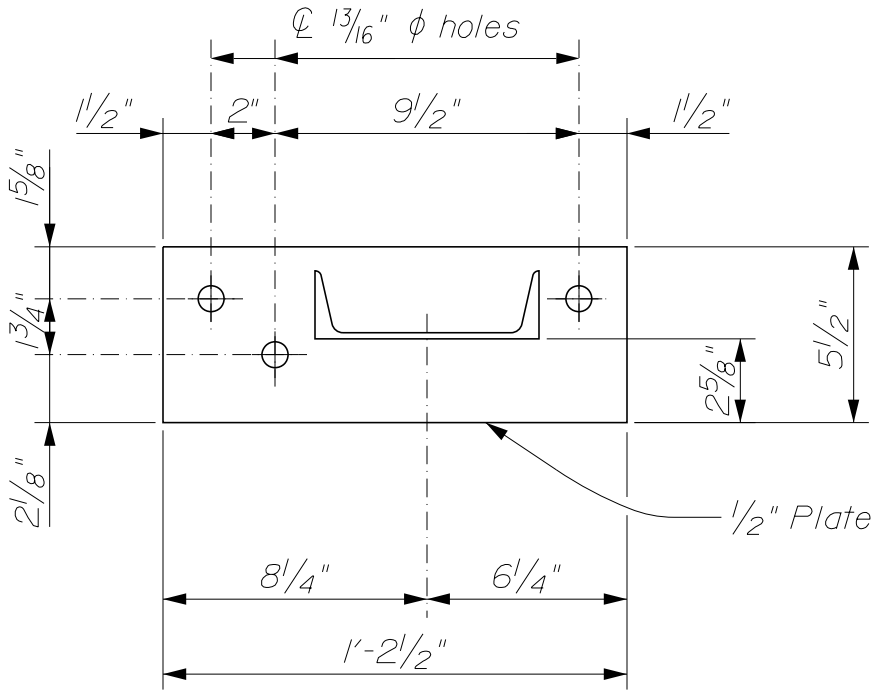

~ END POST & BASE PLATE PLAN ~

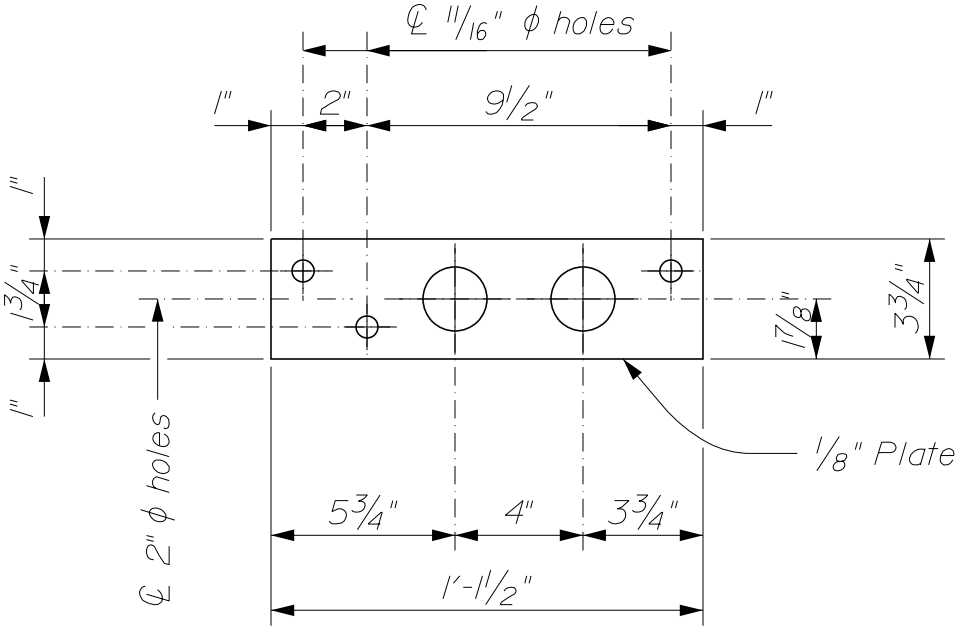

~ END SPACER PLATE PLAN ~

BARRIER - MOUNTED STEEL BRIDGE RAILING

507(36)

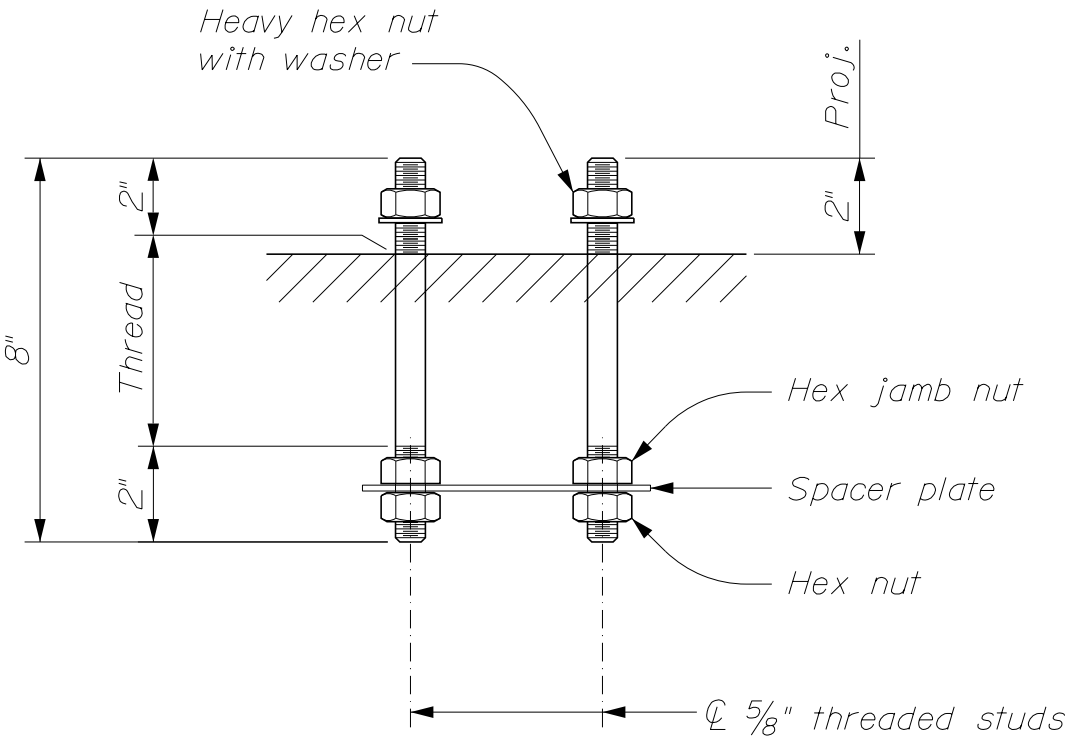

~ ANCHOR BOLT DETAIL ~

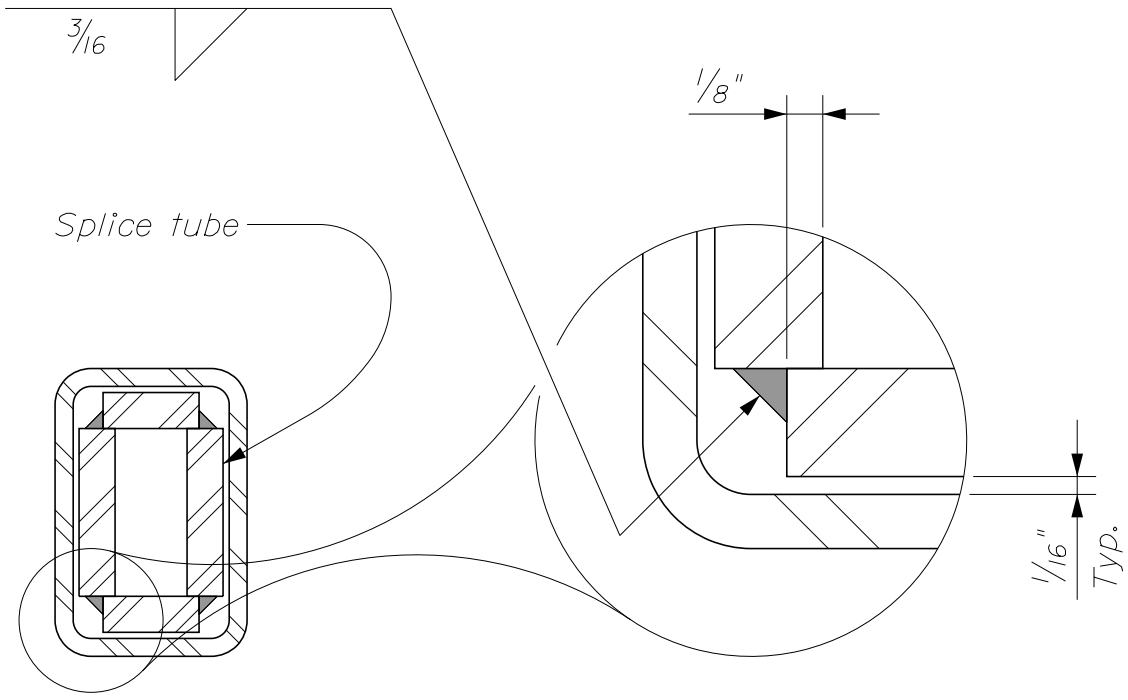

~ RAIL SPLICE SECTION ~

BARRIER - MOUNTED STEEL BRIDGE RAILING

507(37)

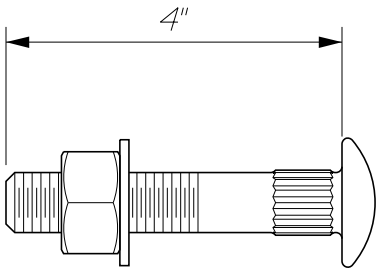

~ RIBBED NECK BOLT ~
(with washer & lock nut)

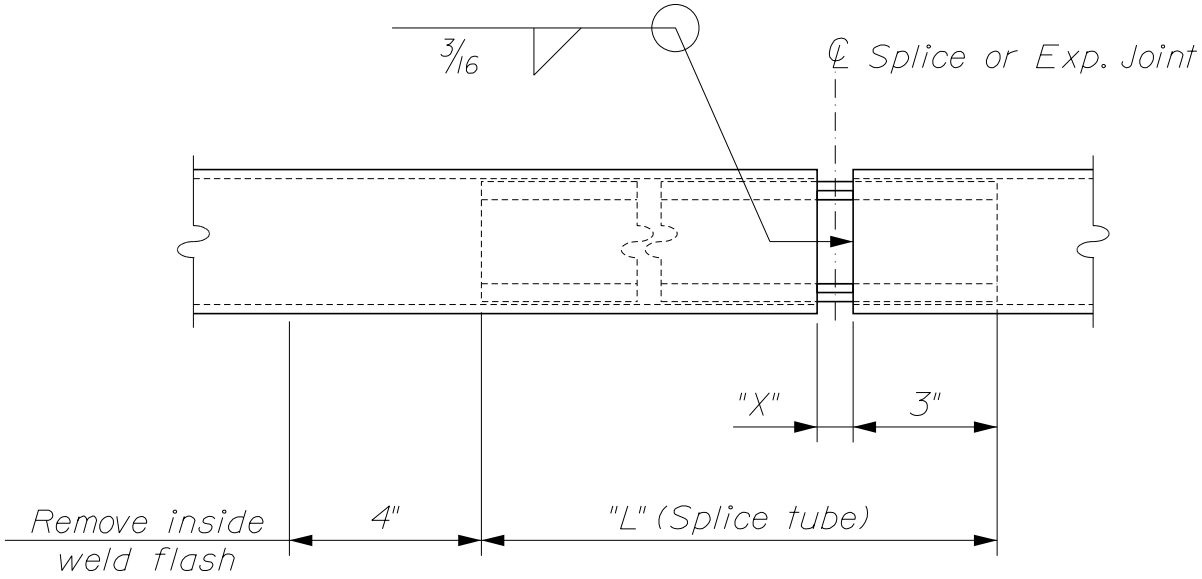

~ RAIL BAR SPLICE / EXPANSION JOINT ~

RAIL BAR SPLICE & EXPANSION JOINT TABLE		
"T"	"L"	"X"
Splice	1'-8"	3/4"
≤ 4"	1'-8"	2 1/2"
> 4" ≤ 6 1/2"	2'-0"	4"
> 6 1/2" ≤ 9"	2'-4"	5"
> 9" ≤ 13"	2'-10"	7"

"T" = Total Movement

SPLICE TUBE (1 - Bar Railing)	
Top & Bot. Plates	Bar 1x3/8 x "L"
Side Plates	Bar 1 3/4 x 3/8 x "L"

SPLICE TUBE (2 - Bar Railing)	
Top & Bot. Plates	Bar 1x3/8 x "L"
Side Plates	Bar 2 3/4 x 3/8 x "L"

BARRIER - MOUNTED STEEL BRIDGE RAILING

507(38)

NOTES:

1. All work and materials shall conform to the provisions of Standard Specifications Section 507 - Railings.

2. All exposed cut or sheared edges shall be rounded and free of burrs.

3. All parts shall be galvanized after fabrication in accordance with ASTM A 123, except that hardware shall meet the requirements of ASTM A 153. Parts shall be blast - cleaned prior to galvanizing in accordance with SSPC - SP6.

4. Rail posts shall be set normal to grade unless otherwise indicated.

5. Lengths of rail bar shall be attached to a minimum of 2 rail posts and to at least 4 posts whenever possible.

6. Rail bar expansion joints shall be provided in any rail bay spanning a superstructure expansion joint. Expansion joint width shall be "X" at 45 °F and will be adjusted as directed by the Resident.

7. Holes for ribbed - neck bolts shall be field - drilled to an appropriate size to produce an interference fit with the bolts.

8. Rail post anchoring nuts shall be tightened to a snug fit and given an additional 1/8 turn.

9. All butt joint welds shall have a minimum penetration of 60 percent.

10. If there is a conflict between these Standard Details and the Design Drawings, the requirements of the Design Drawings shall be followed.

MATERIALS:

Rail bars	ASTM A500
All other shapes & plates	AASHTO M 270M/M 270, Grade 36
Threaded studs, washers & exposed heavy hex nuts	AASHTO M 314, Grade 105
All other bolts & nuts	ASTM A 307, Grade C

BARRIER - MOUNTED STEEL BRIDGE RAILING

507(39)

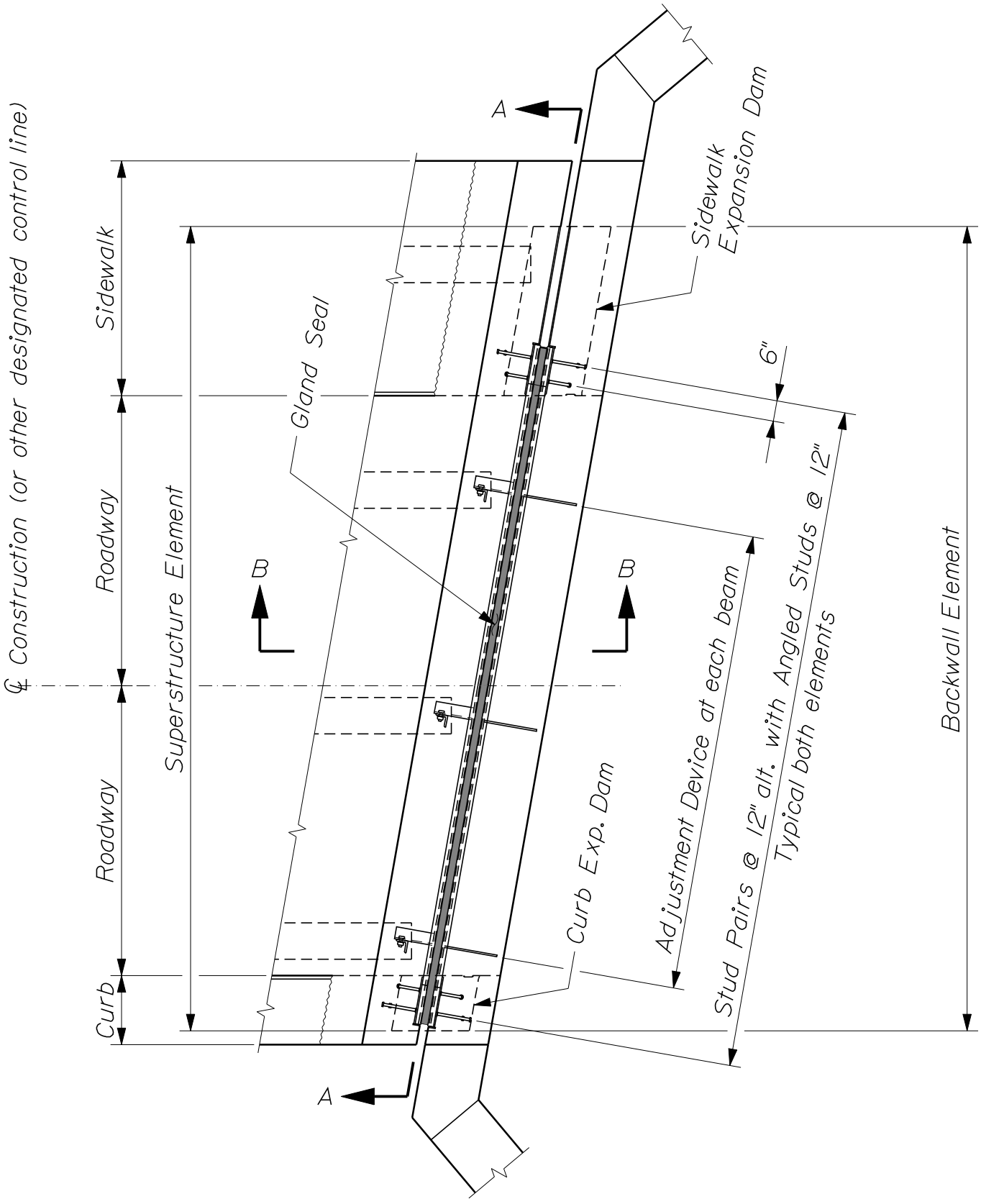

~ EXPANSION DEVICE PLAN ~
(Typical installation)

EXPANSION DEVICE - GLAND SEAL

520(01)

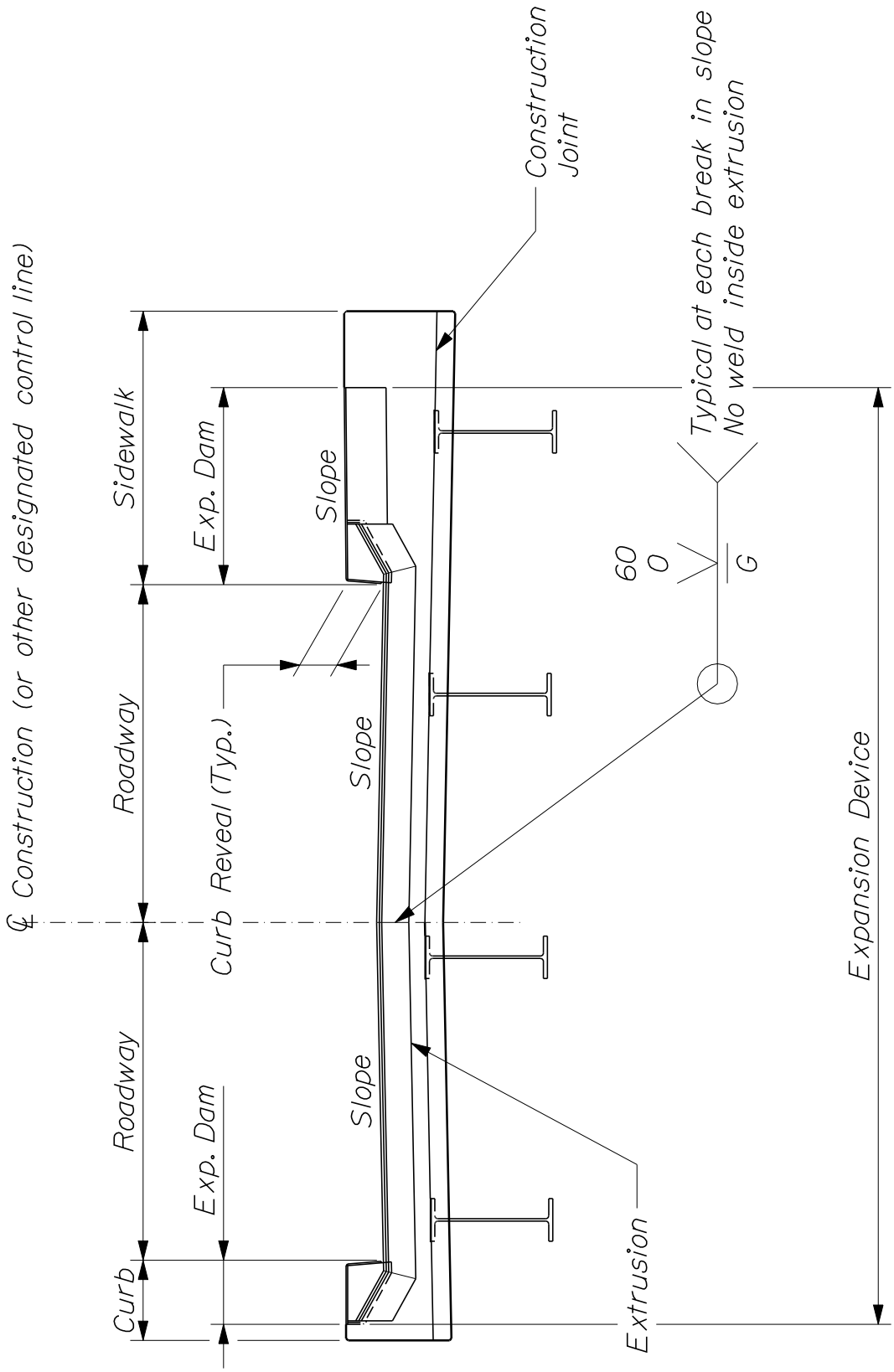

~ SECTION A - A ~

EXPANSION DEVICE - GLAND SEAL

520(02)

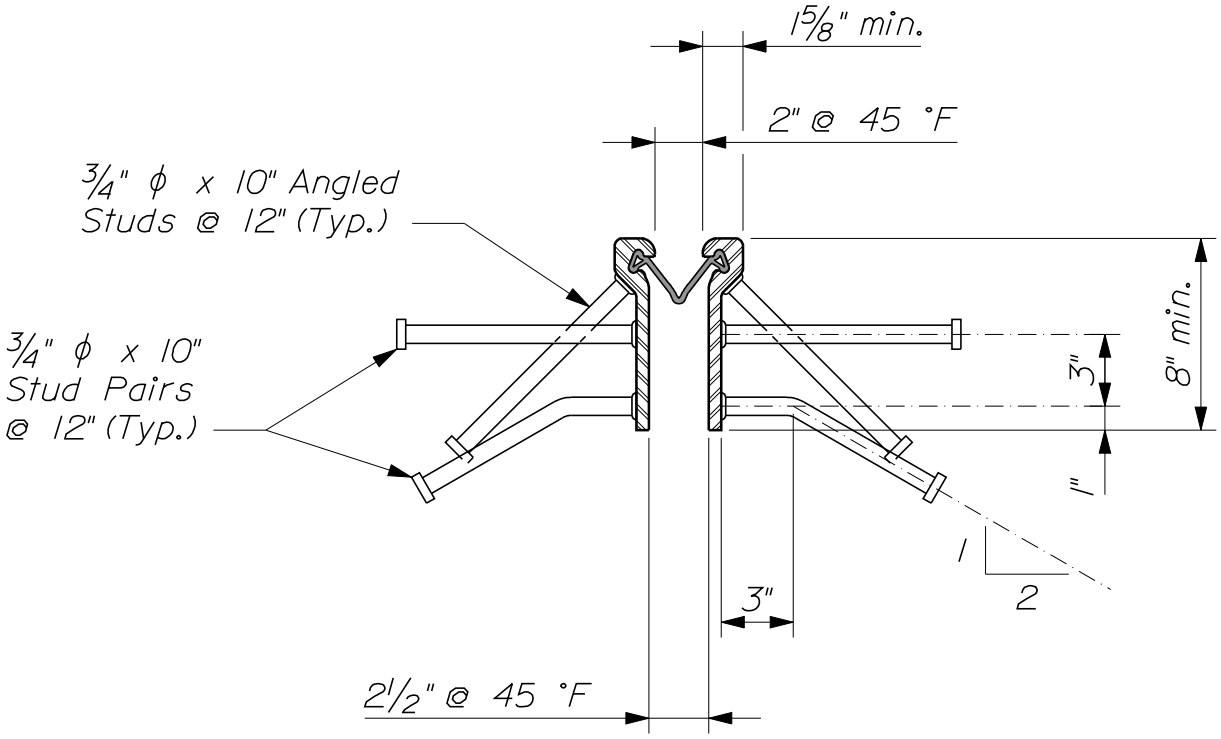

~ TYPICAL SECTION ~ EXPANSION DEVICE ~

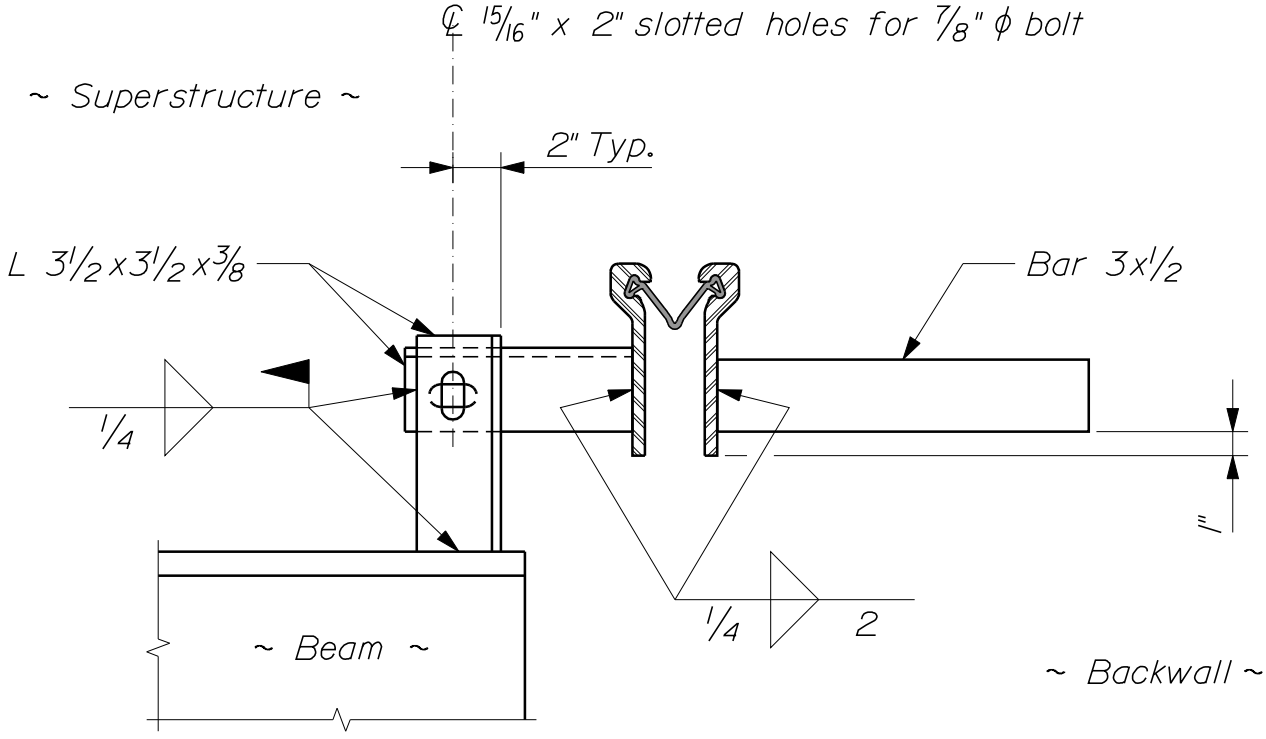

~ ADJUSTMENT DEVICE DETAIL ~

EXPANSION DEVICE - GLAND SEAL

520(03)

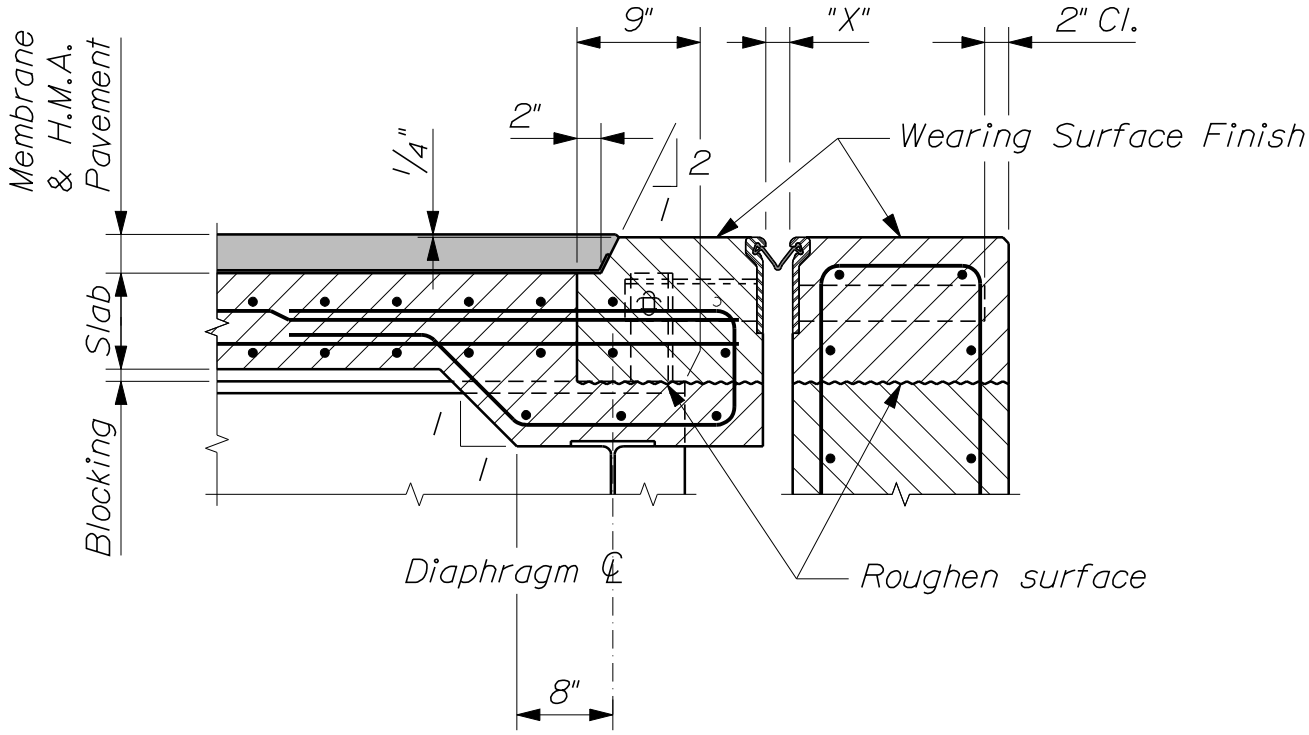

~ SECTION B - B ~
(Showing Hot Mix Asphalt Pavement Wearing Surface)

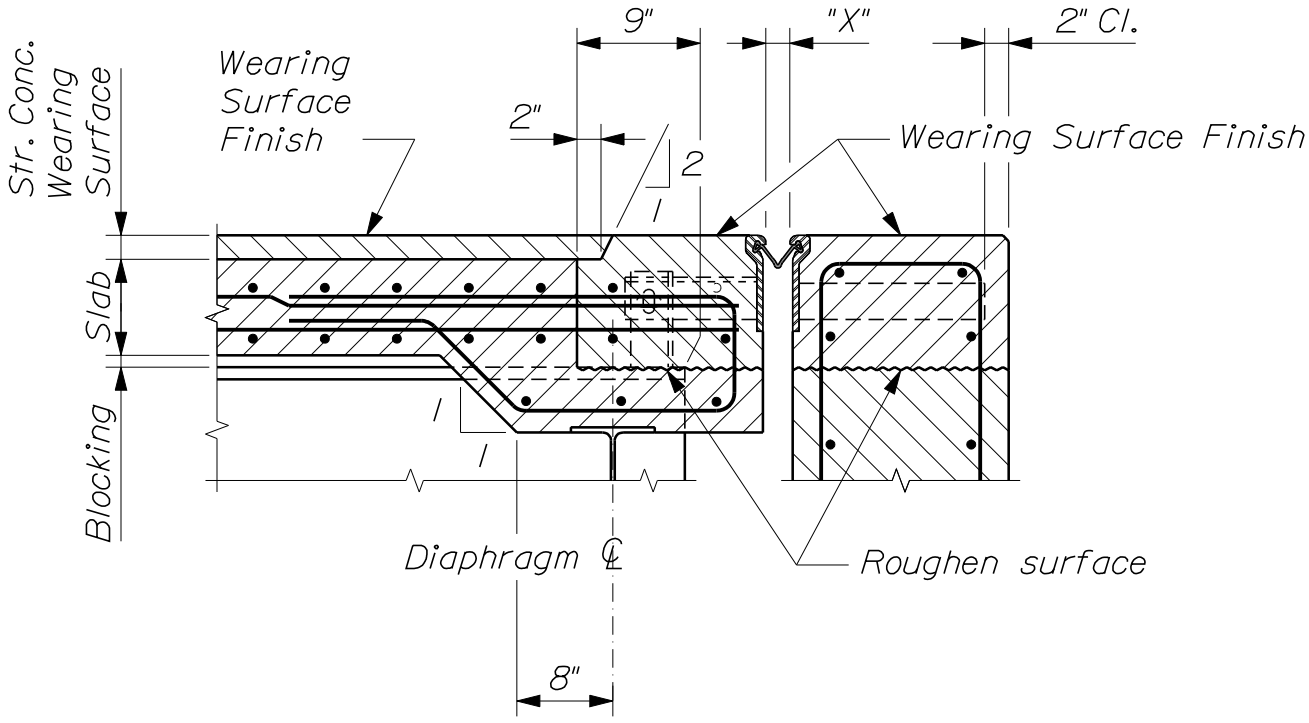

~ SECTION B - B ~
(Showing Structural Concrete Wearing Surface)

EXPANSION DEVICE - GLAND SEAL

520(04)

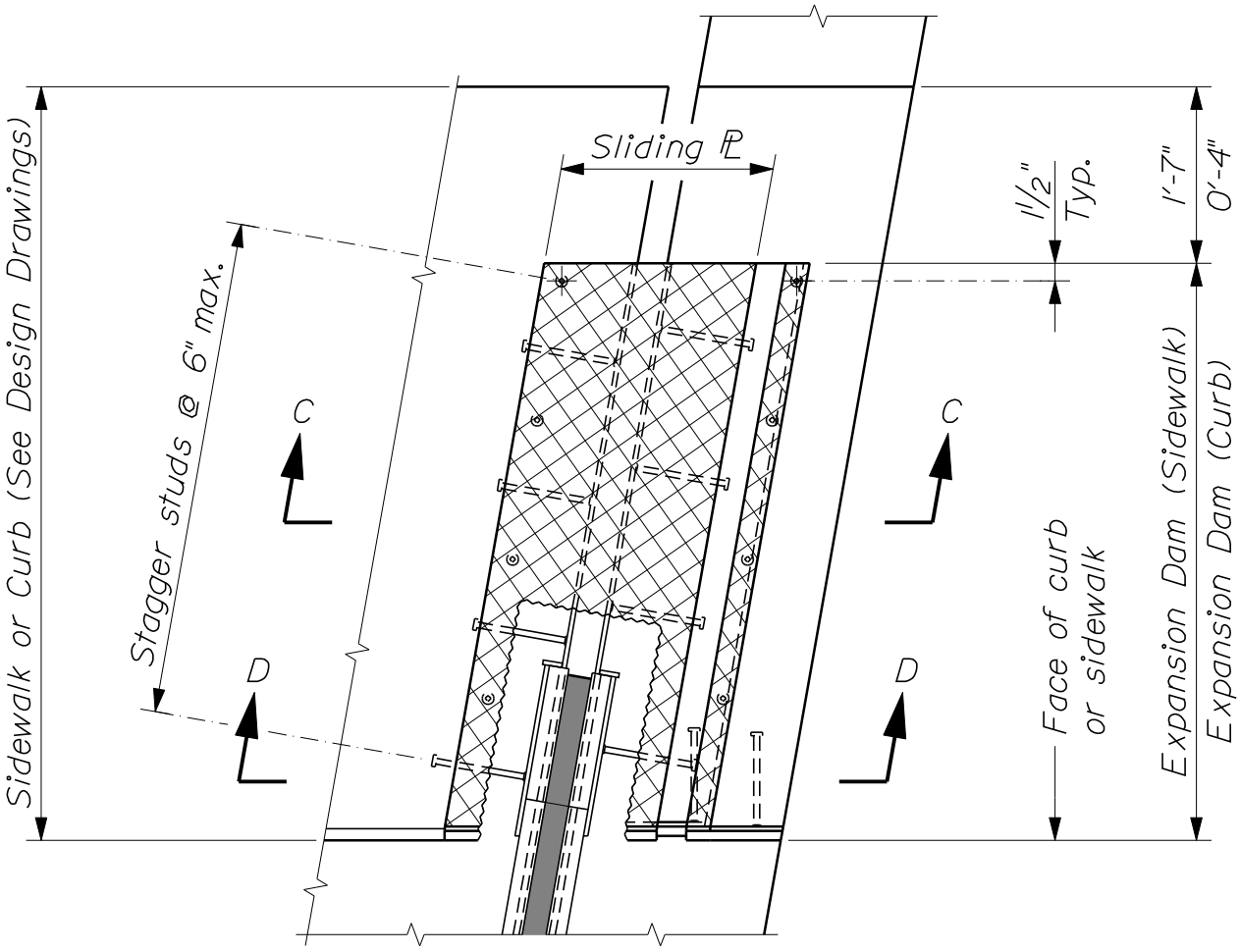

~ EXPANSION DAM PLAN ~

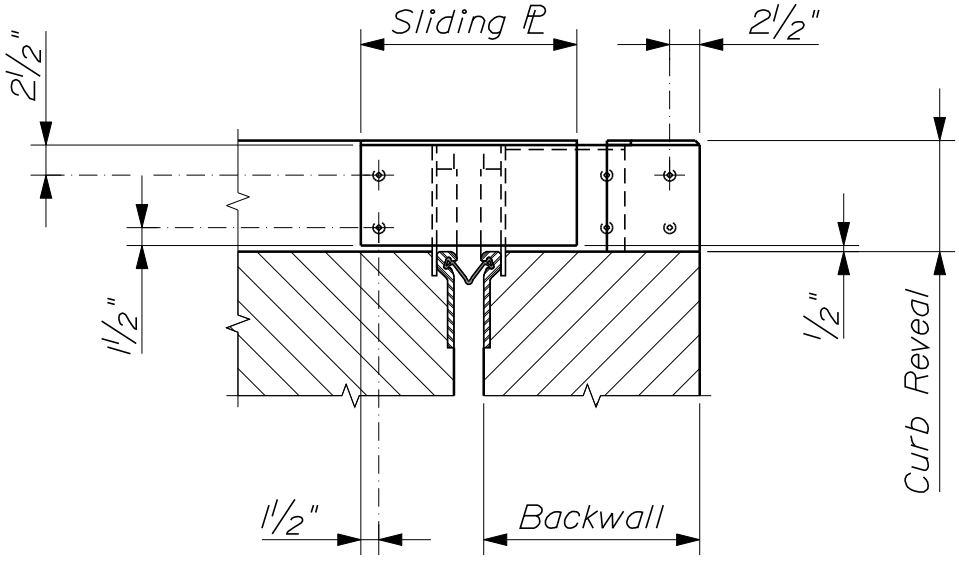

~ EXPANSION DAM ELEVATION ~

EXPANSION DEVICE - GLAND SEAL

520(05)

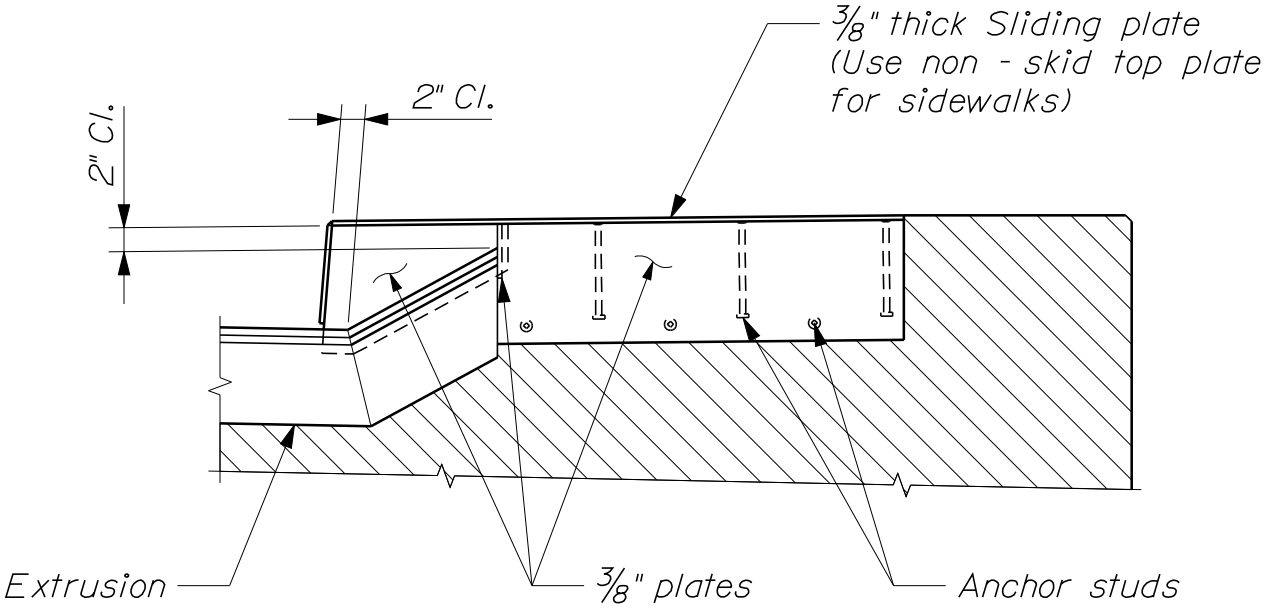

~ EXPANSION DAM SECTION ~

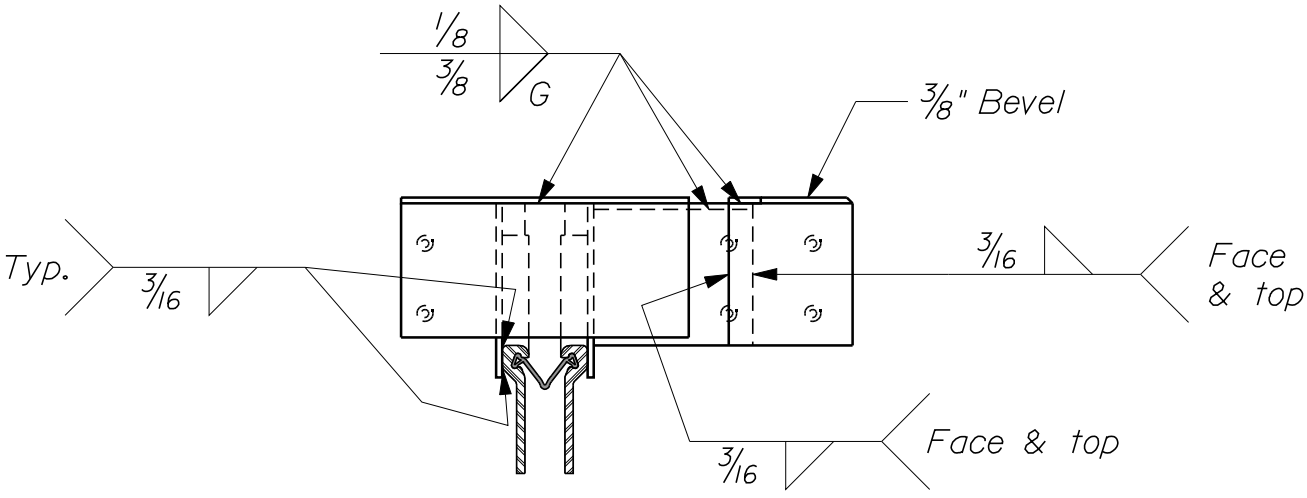

~ WELDING DETAIL ~

EXPANSION DEVICE - GLAND SEAL

520(06)

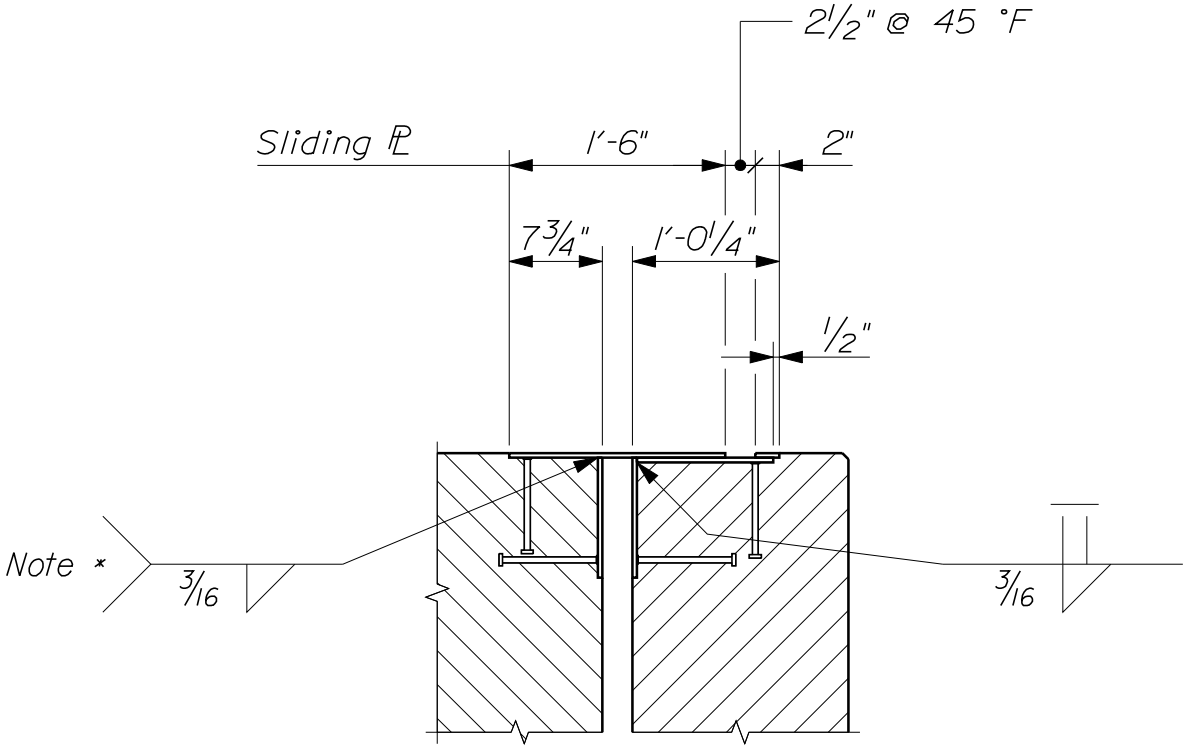

~ SECTION C - C ~

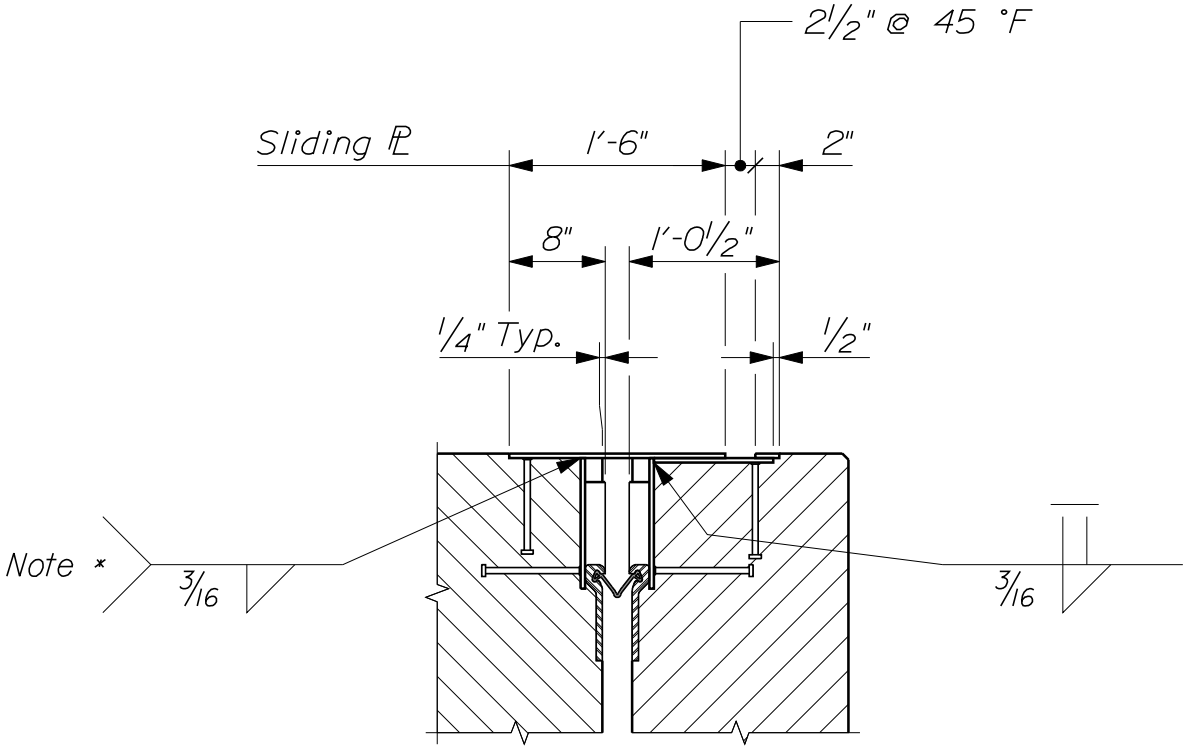

~ SECTION D - D ~

EXPANSION DEVICE - GLAND SEAL

520(07)

NOTES:

1. Each "Expansion Device - Gland Seal" consists of one backwall element and one superstructure element (or two superstructure elements over piers) with expansion dams as required.

2. Refer to Design Drawings for dimensions, slopes, skew and all other information necessary to fabricate and install each Expansion Device.

3. The Expansion Device shall be fabricated to be installed normal to grade.

4. Anchor studs shall be installed using automatically timed stud welding equipment.

5. The Expansion Device shall be set to an opening of two inches in the fabrication shop. The joint opening shall be adjusted for temperature in the field at the time of installation using the following formula:

$$0.00008 \times \text{"D"} \times \text{"}\Delta T\text{"} = \text{Adjustment (in inches)}$$

"D" is the distance in feet between the backwall and the nearest fixed bearings (for joints at abutments) or between the fixed bearings at either side of the expansion joint (for joints at piers). "Δ T" is the difference between the temperature of the structure and 45 °F.

A structure temperature above 45 °F will result in a smaller joint opening.

6. Welding to reinforcing steel will be allowed in the top of the abutment backwall above the block - out joint.

7. The slab and backwall concrete shall be in place before the Expansion Device is fixed in position. No allowance for movement due to dead load deflection is necessary.

8. The concrete in the block - out may be placed with the curb / sidewalk concrete. An approved epoxy bonding agent shall be applied to all vertical surfaces of the block - out before making the final concrete placement.

9. If there is a conflict between these Standard Details and the Design Drawings, the requirements of the Design Drawings shall be followed.

MATERIALS:

All shapes and plates ..... AASHTO M 270M/M 270, Grade 36

EXPANSION DEVICE - GLAND SEAL

520(08)

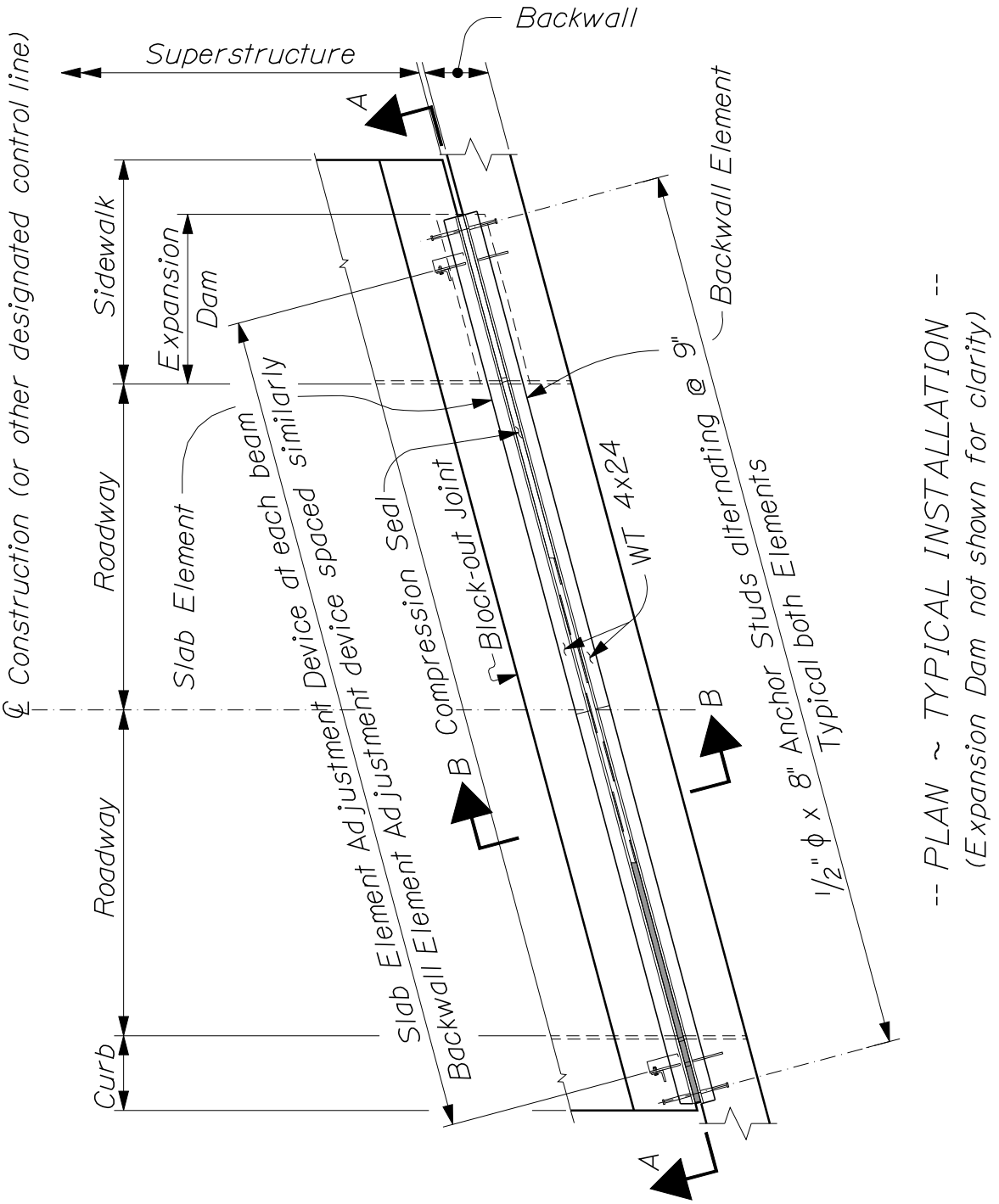

-- PLAN ~ TYPICAL INSTALLATION --
(Expansion Dam not shown for clarity)

EXPANSION DEVICE - COMPRESSION SEAL

520(09)

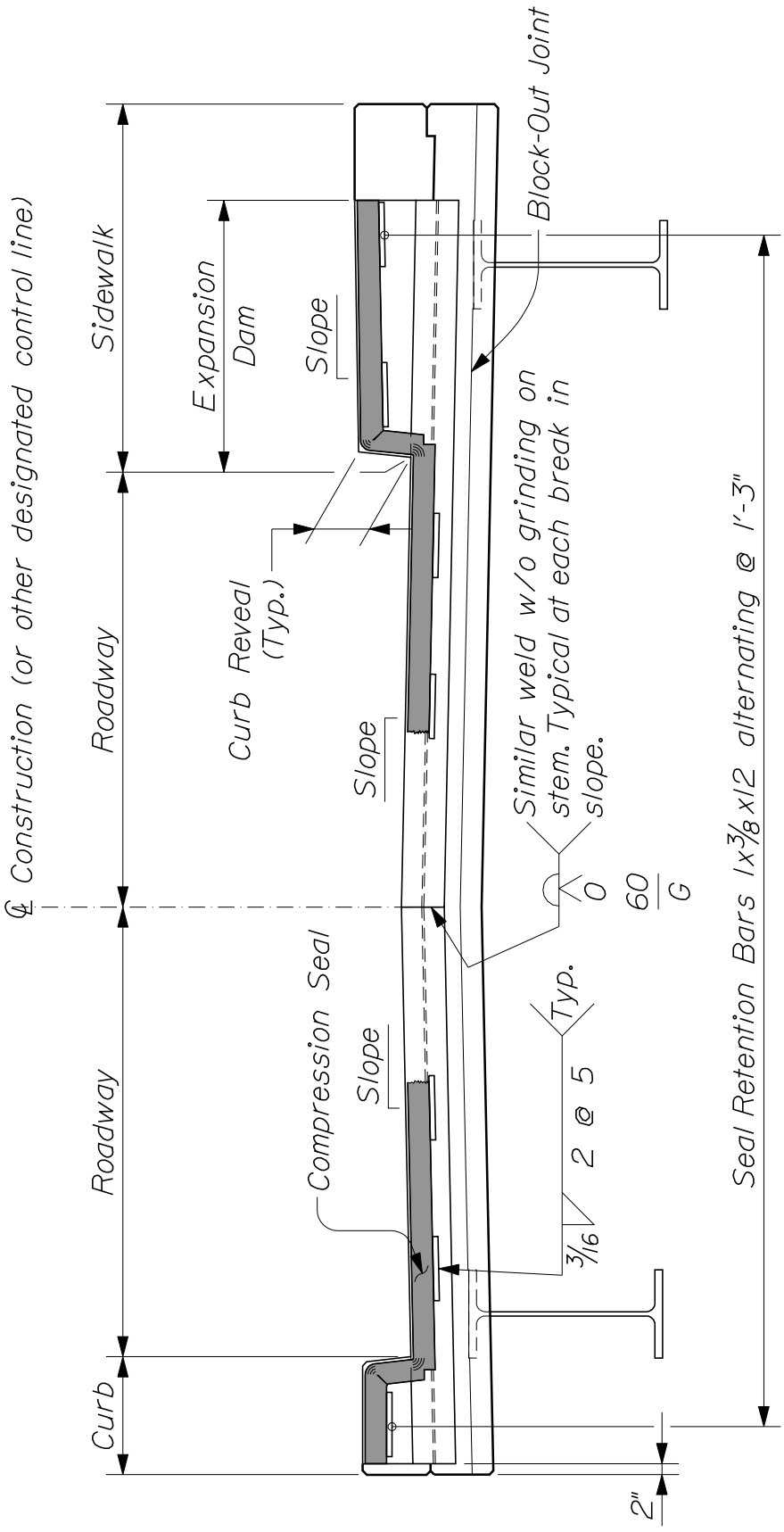

Section A-A / 520(09)

~ ELEVATION ~ TYPICAL INSTALLATION ~

EXPANSION DEVICE - COMPRESSION SEAL

520(10)

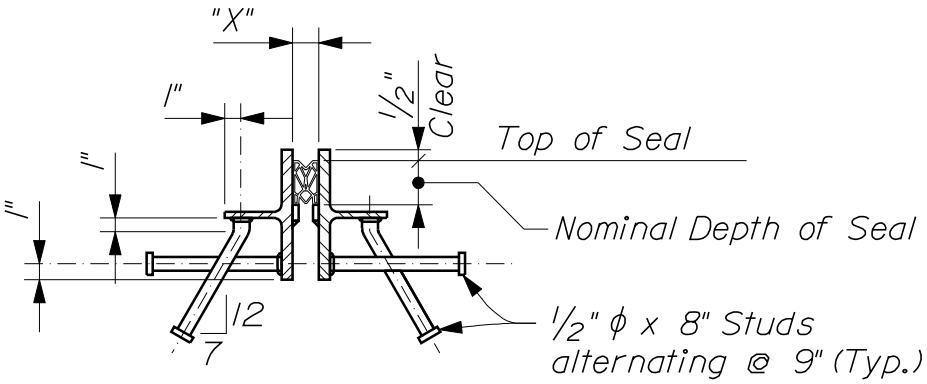

~ TYPICAL SECTION ~

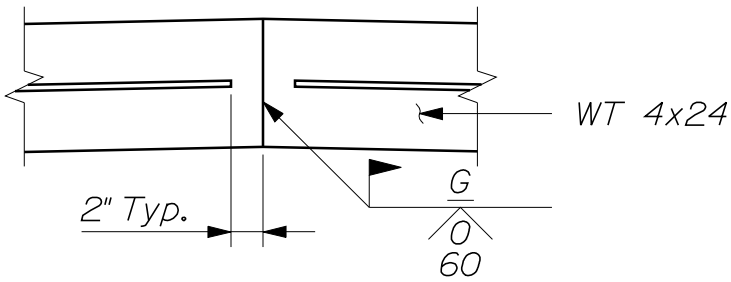

~ JOINT ARMOR FIELD SPLICE ~
(for Stage Construction)

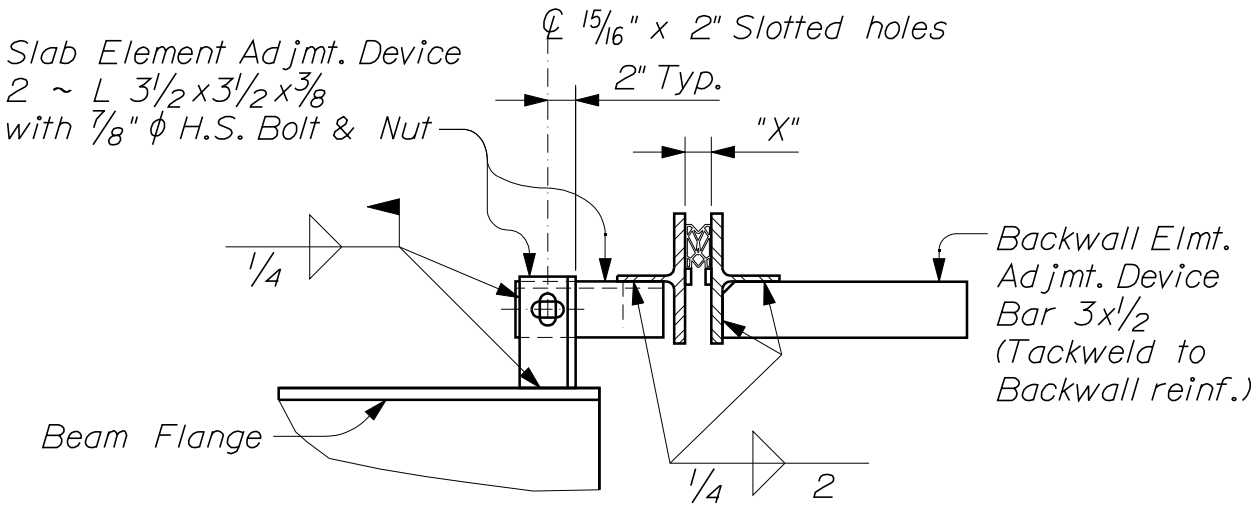

~ ADJUSTMENT DEVICE ~

EXPANSION DEVICE - COMPRESSION SEAL

520(11)

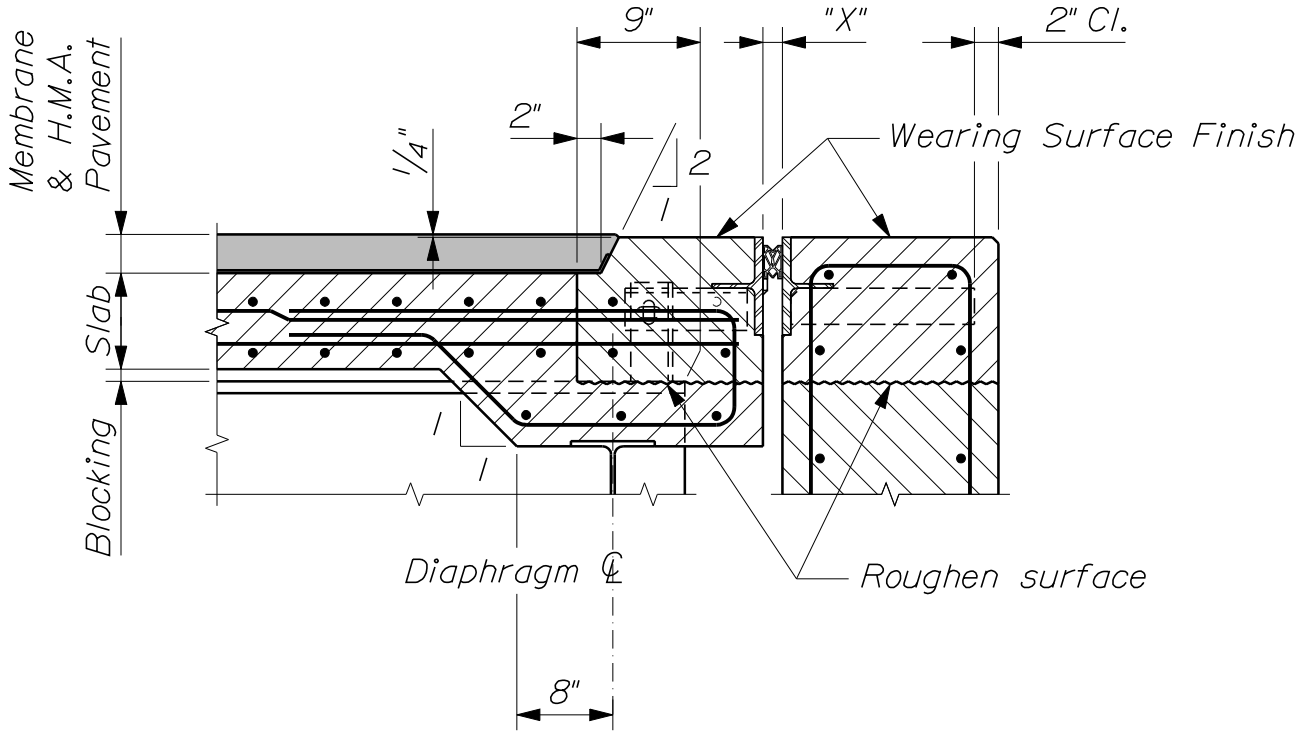

~ SECTION B - B ~
(Showing Hot Mix Asphalt Pavement Wearing Surface)

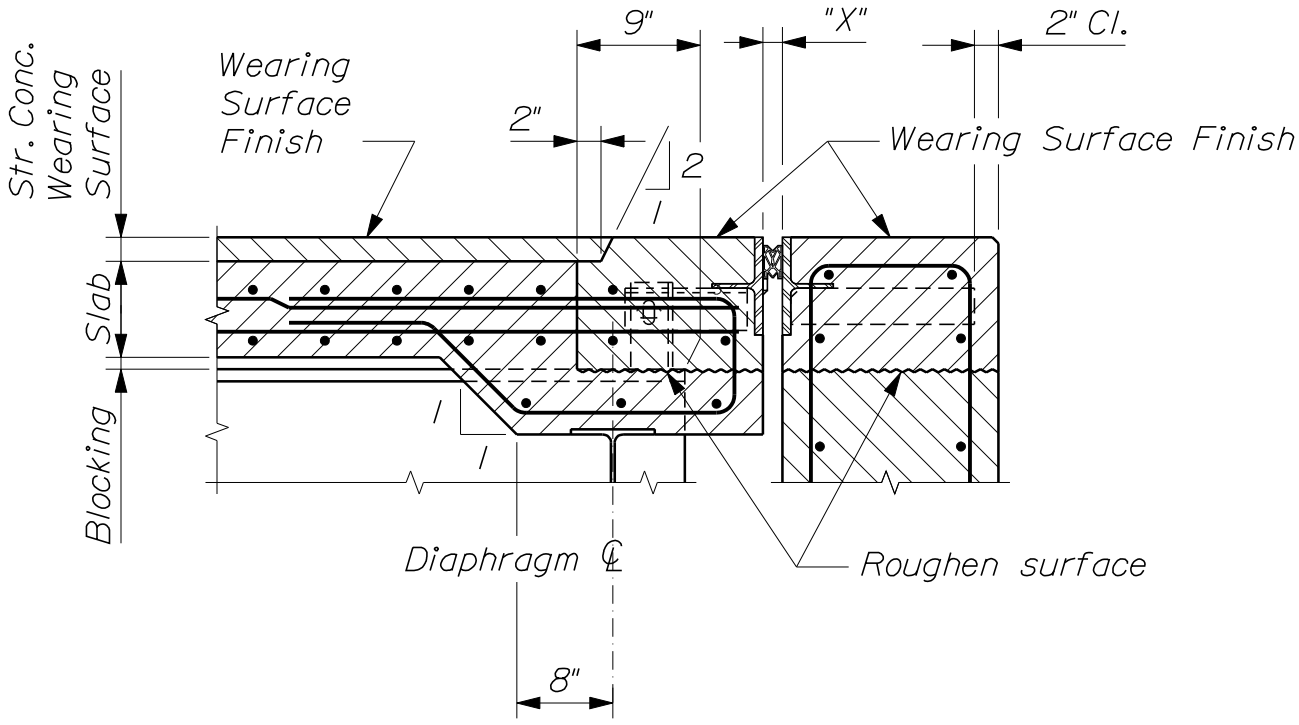

~ SECTION B - B ~
(Showing Structural Concrete Wearing Surface)

EXPANSION DEVICE - COMPRESSION SEAL

520(12)

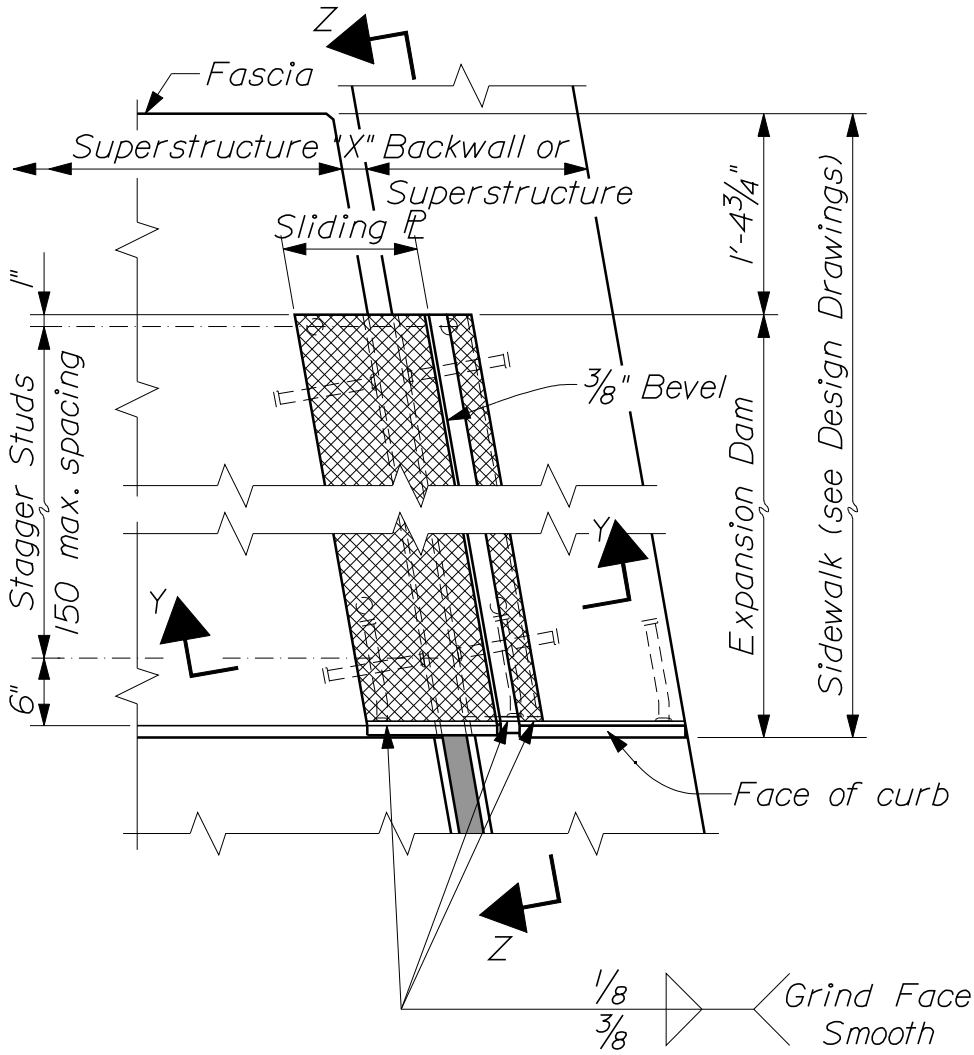

~ PLAN - SIDEWALK EXPANSION DAM ~

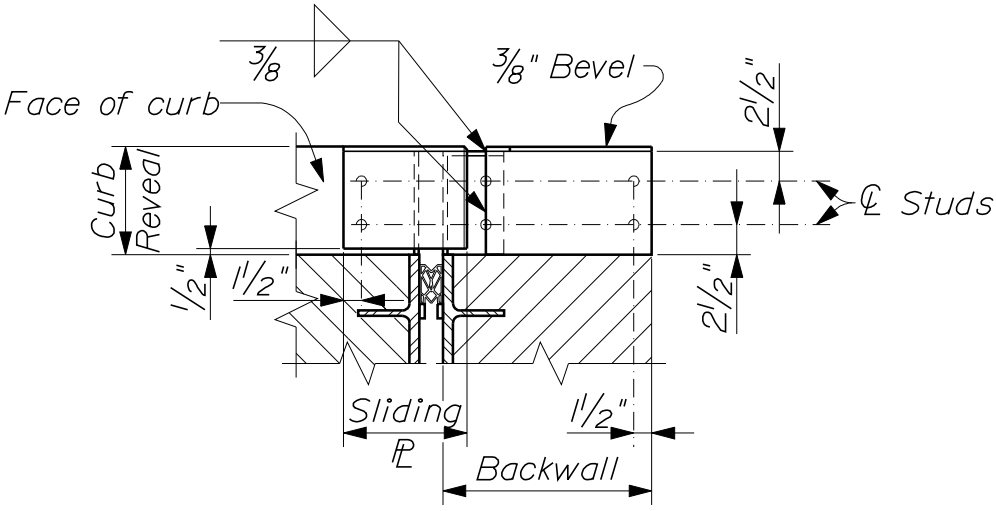

~ ELEVATION - SIDEWALK EXPANSION DAM ~

EXPANSION DEVICE - COMPRESSION SEAL

520(13)

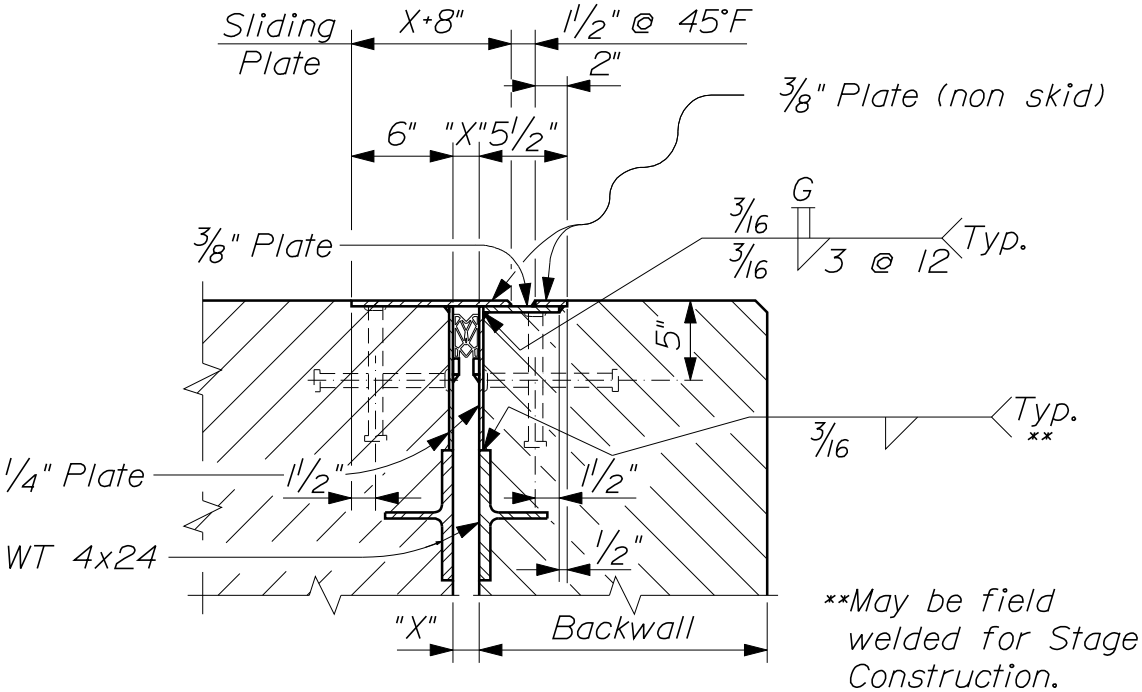

Section Y-Y / 520(13)

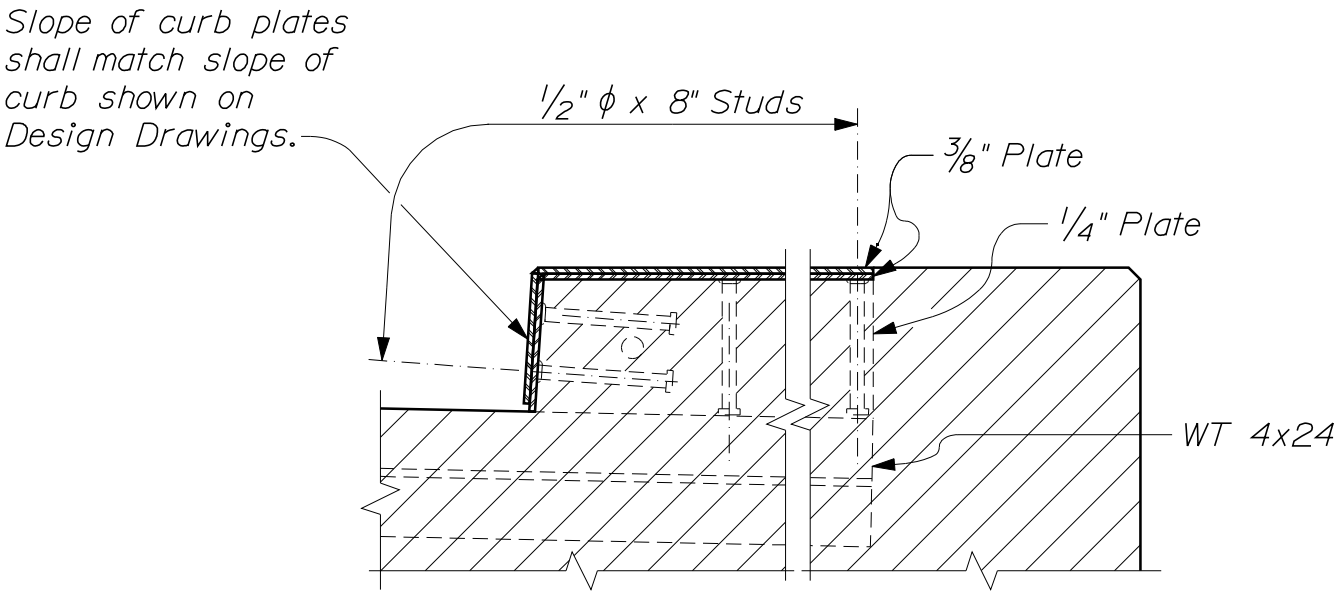

Section Z-Z / 520(13)

~ SIDEWALK EXPANSION DAM SECTIONS ~

EXPANSION DEVICE - COMPRESSION SEAL

520(14)

NOTES:

1. Each "Expansion Device - Compression Seal" consists of one backwall element and one superstructure element (or two superstructure elements over piers) with expansion dams as required.

2. Refer to Design Drawings for dimensions, slopes, skew and all other information necessary to fabricate and install each Expansion Device.

3. The Expansion Device shall be fabricated to be installed normal to grade.

4. Anchor studs shall be installed using automatically timed stud welding equipment.

5. Dimension "X" at 45 °F shall be determined as follows:

$$(0.85 \times \text{nominal seal width}) - \tfrac{1}{2}MR$$

The Movement Rating (MR) for each seal shall be as determined by MaineDOT for the make and type of seal to be provided. Dimension "X" at 45 °F and the make and type of seal shall be shown on the Shop Detail Drawings.

6. Final adjustment for temperature shall be made in the field according to the "Compression Seal Adjustment Chart" shown on the Design Drawings. The adjustment shall be measured parallel to the centerline of construction.

7. Welding to reinforcing steel will be allowed in the top of the abutment backwall above the block - out joint.

8. The slab and backwall concrete shall be in place before the Expansion Device is fixed in position. No allowance for movement due to dead load deflection is necessary.

9. The concrete in the block - out may be placed with the curb / sidewalk concrete. An approved epoxy bonding agent shall be applied to all vertical surfaces of the block - out before making the final concrete placement.

10. If there is a conflict between these Standard Details and the Design Drawings, the requirements of the Design Drawings shall be followed.

MATERIALS:

All shapes and plates ..... AASHTO M 270M/M 270, Grade 36

EXPANSION DEVICE - COMPRESSION SEAL

520(15)

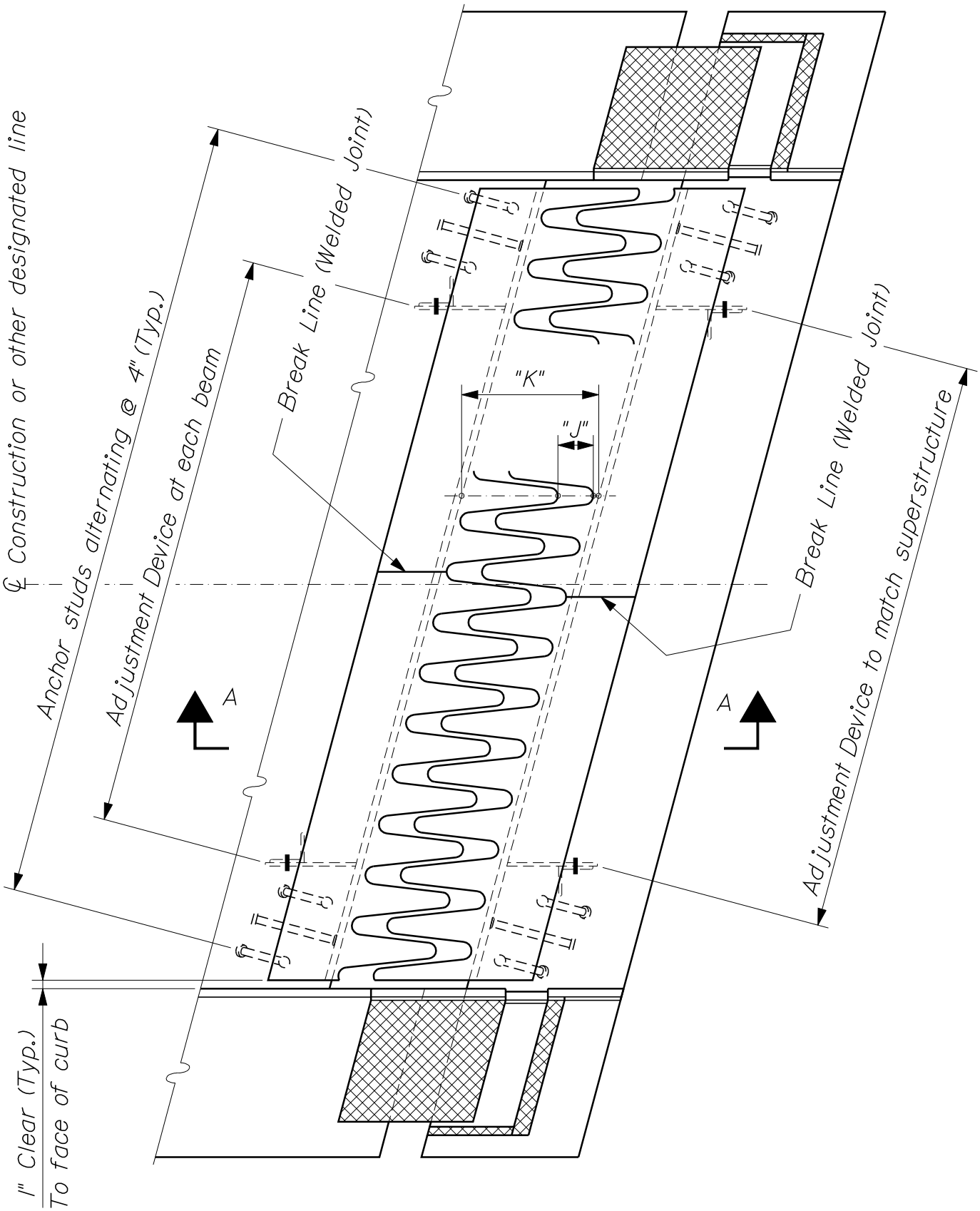

~ FINGER JOINT PLAN ~

EXPANSION DEVICE - FINGER JOINT

521(01)

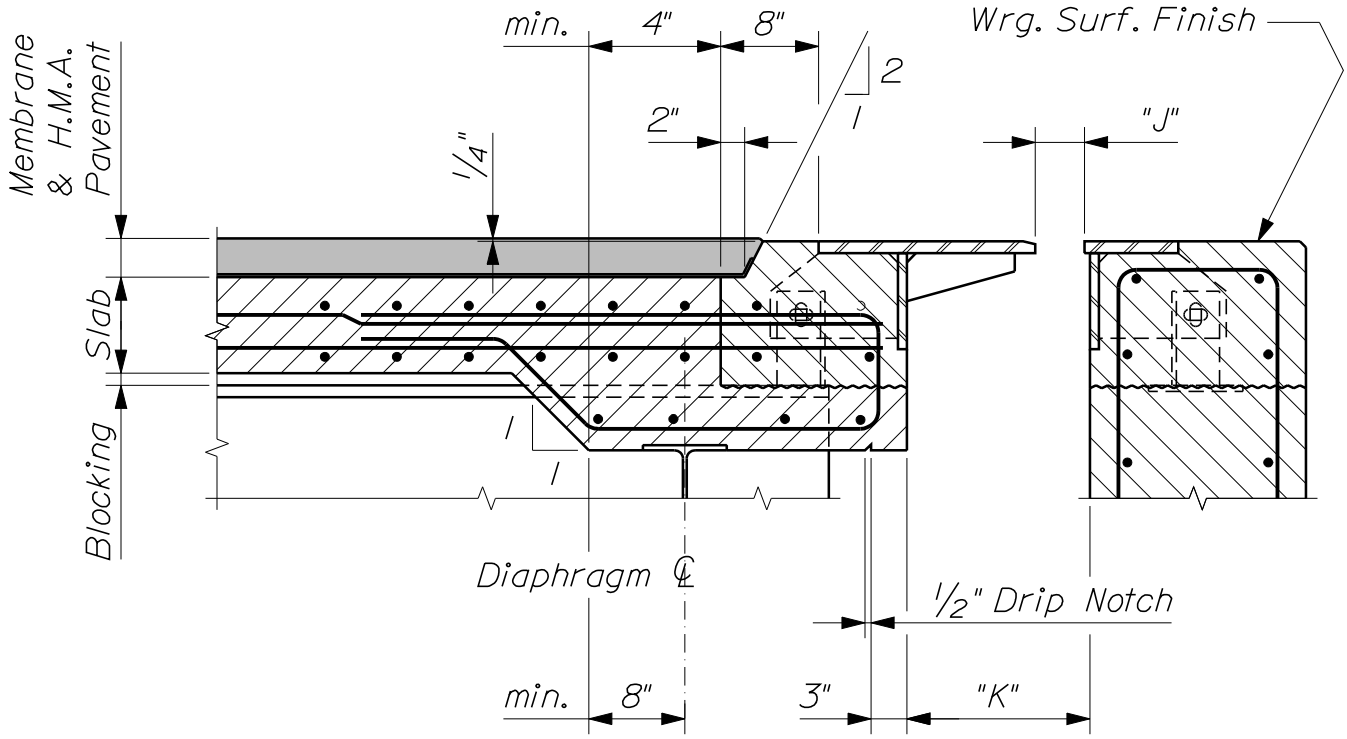

~ SECTION A - A ~
(Showing Hot Mix Asphalt Pavement Wearing Surface)

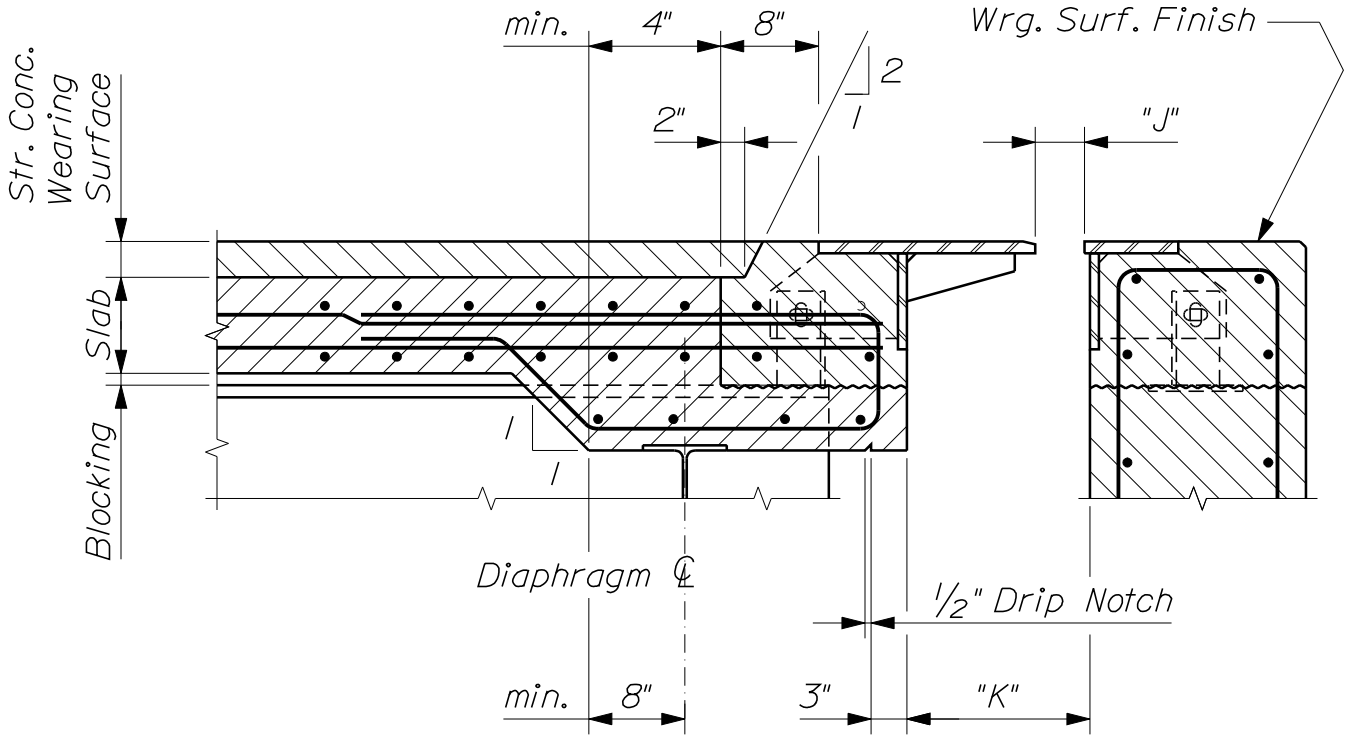

~ SECTION A - A ~
(Showing Structural Concrete Wearing Surface)

EXPANSION DEVICE - FINGER JOINT

521(02)

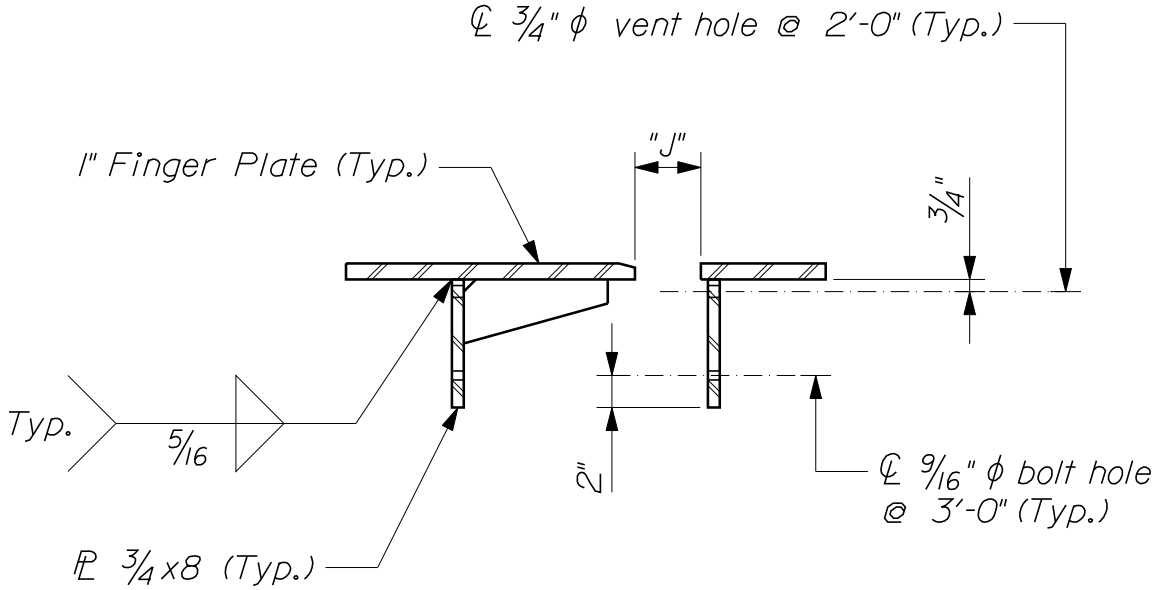

-- TYPICAL FINGER JOINT SECTION --

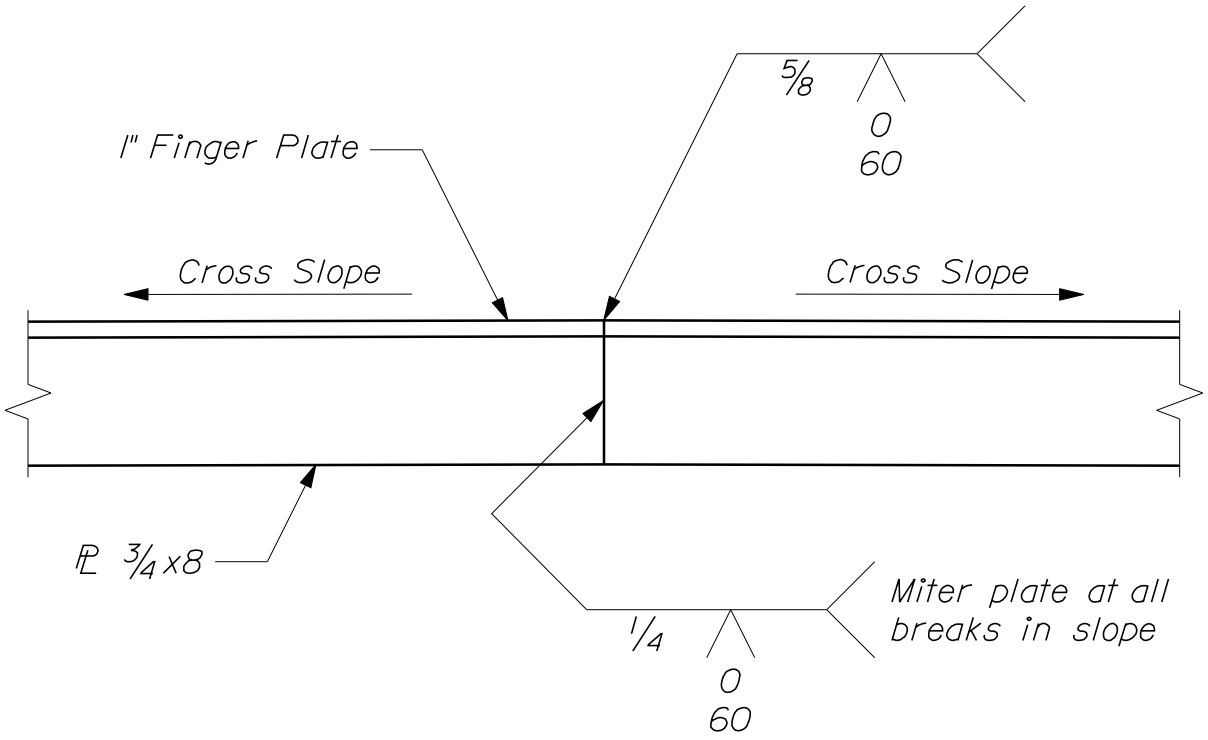

-- FINGER JOINT ELEVATION AT BREAK IN CROSS SLOPE --

EXPANSION DEVICE - FINGER JOINT

521(03)

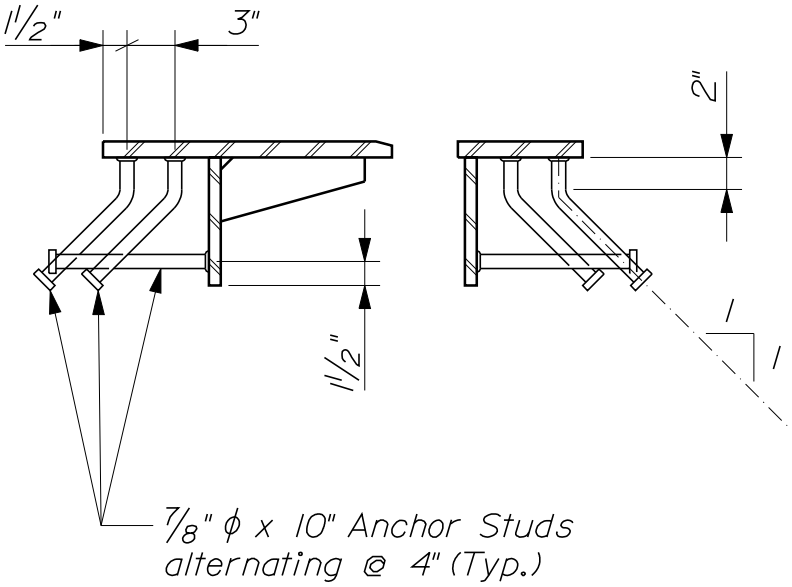

-- ANCHOR STUD DETAIL --

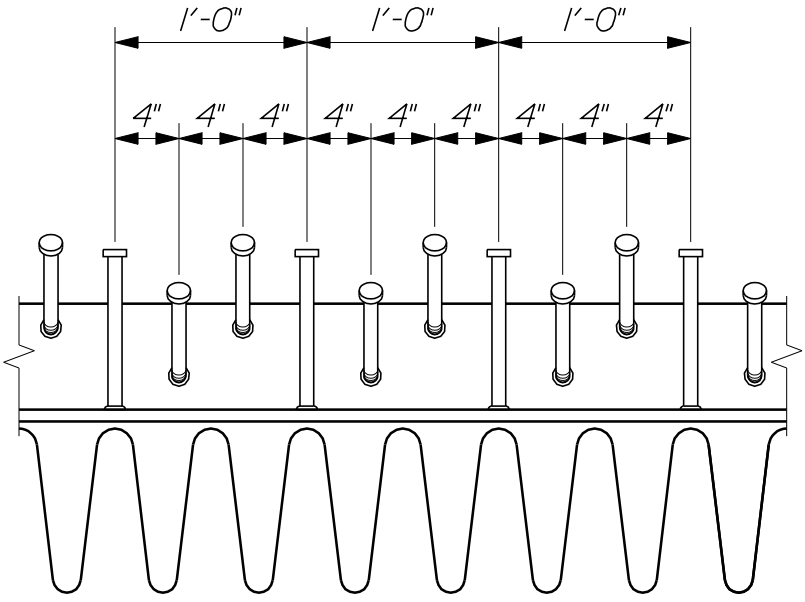

-- ANCHOR STUD LAYOUT PLAN (BOTTOM VIEW) --

EXPANSION DEVICE - FINGER JOINT

521(04)

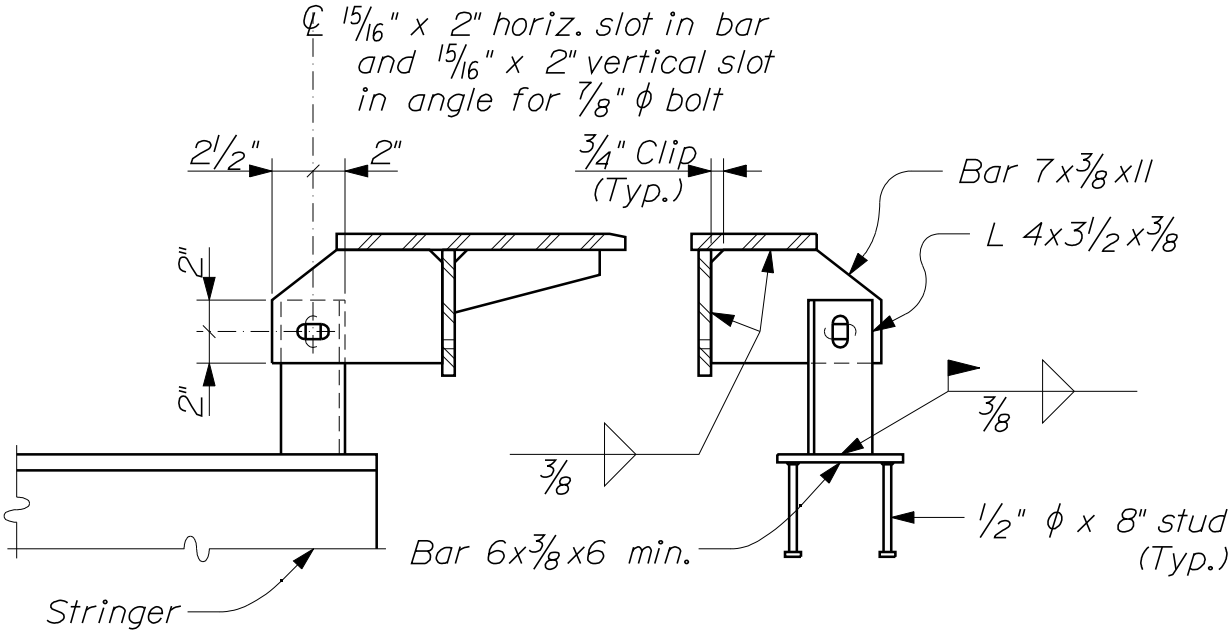

~ ADJUSTMENT DEVICES ~

Symmetical both sides of joint except as shown

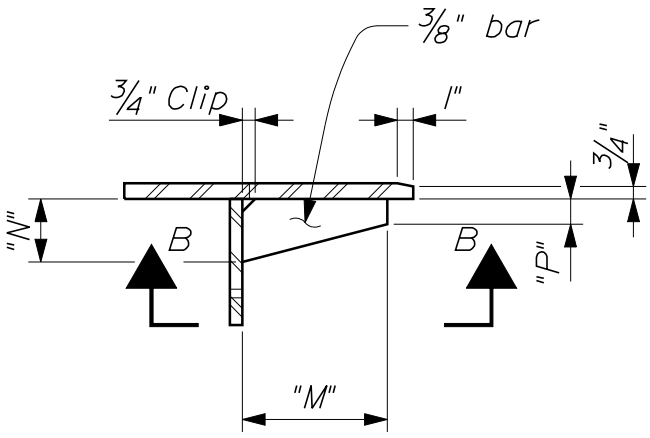

~ FINGER DETAIL ~

EXPANSION DEVICE - FINGER JOINT

521(05)

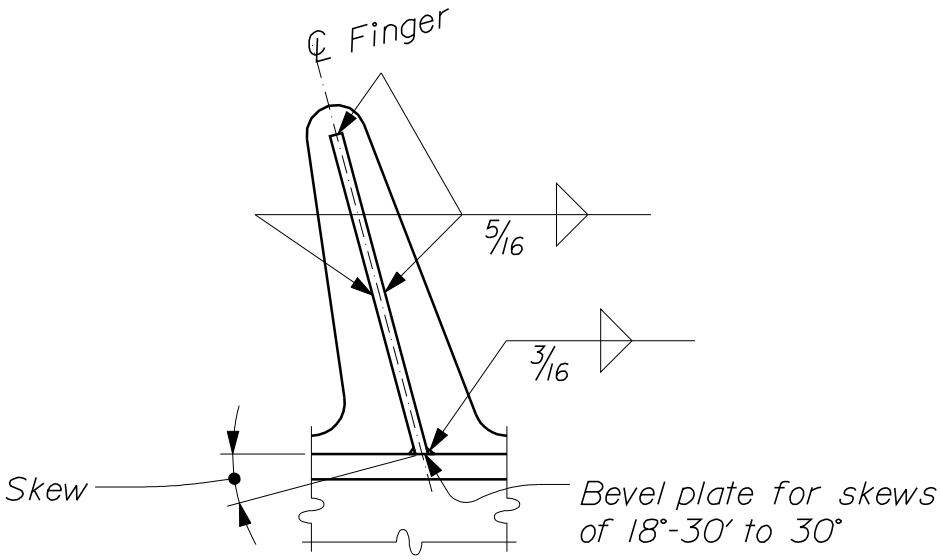

~ VIEW B-B ~
Skew 0° to 30°

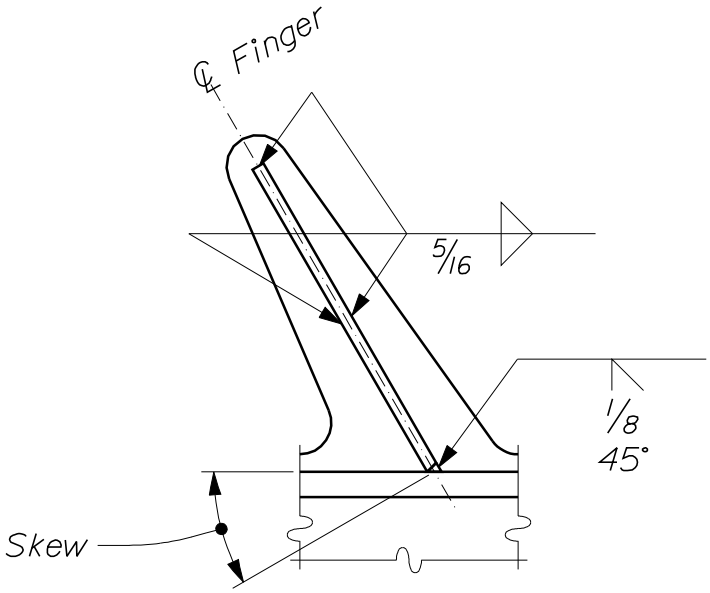

~ VIEW B-B ~
Skew over 30°

EXPANSION DEVICE - FINGER JOINT

521(06)

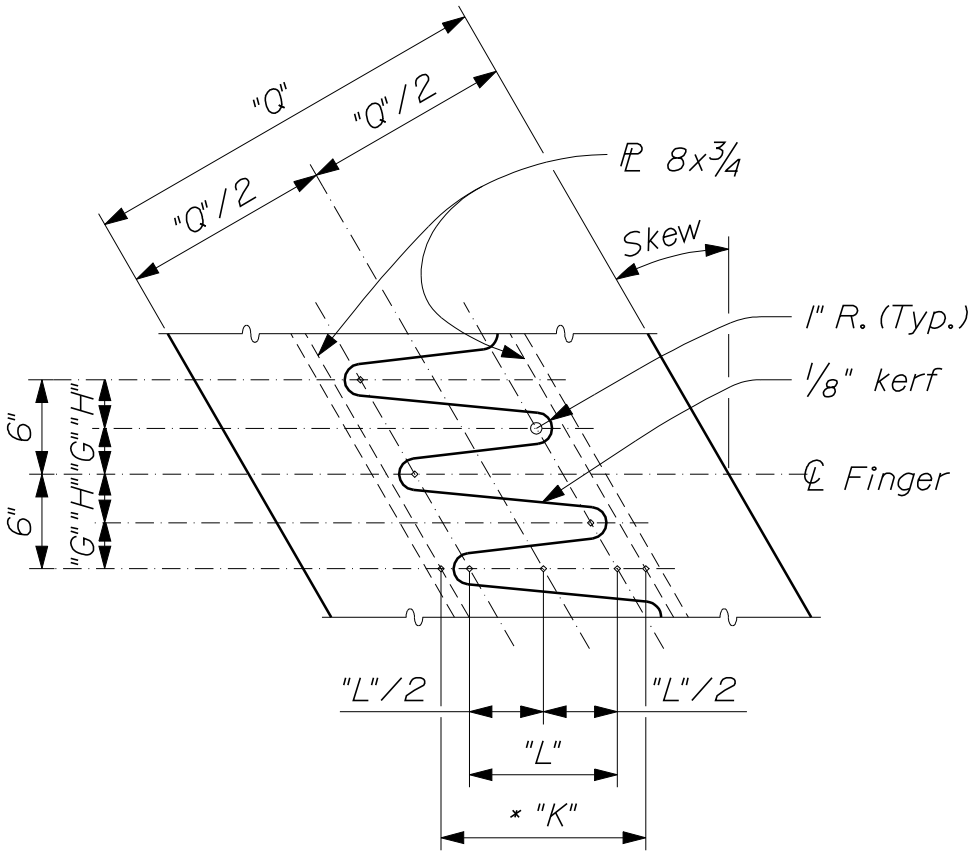

~ FINGER CUTTING DETAIL ~
(Skew back on left)

Note; Cut from one plate and match mark
* "K" is "K" dimension prior to cutting plate

EXPANSION DEVICE - FINGER JOINT

521(07)

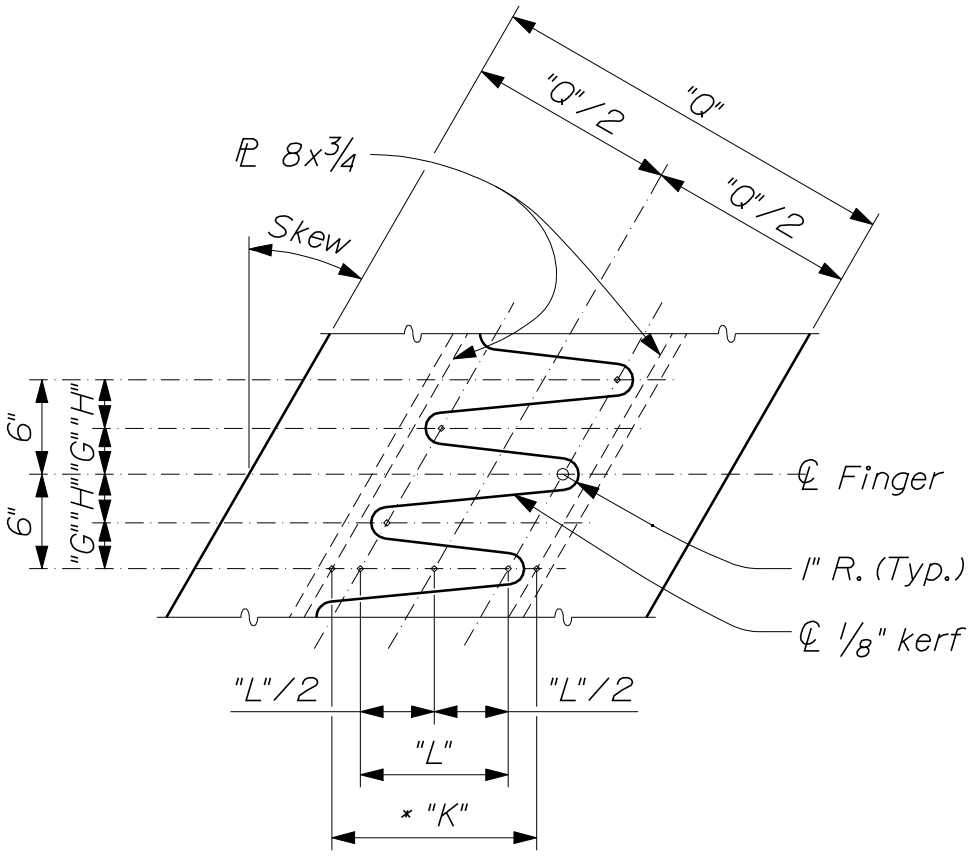

~ FINGER CUTTING DETAIL ~
(Skew ahead on left)

Note; Cut from one plate and match mark
* "K" is "K" dimension prior to cutting plate

EXPANSION DEVICE - FINGER JOINT

521(08)

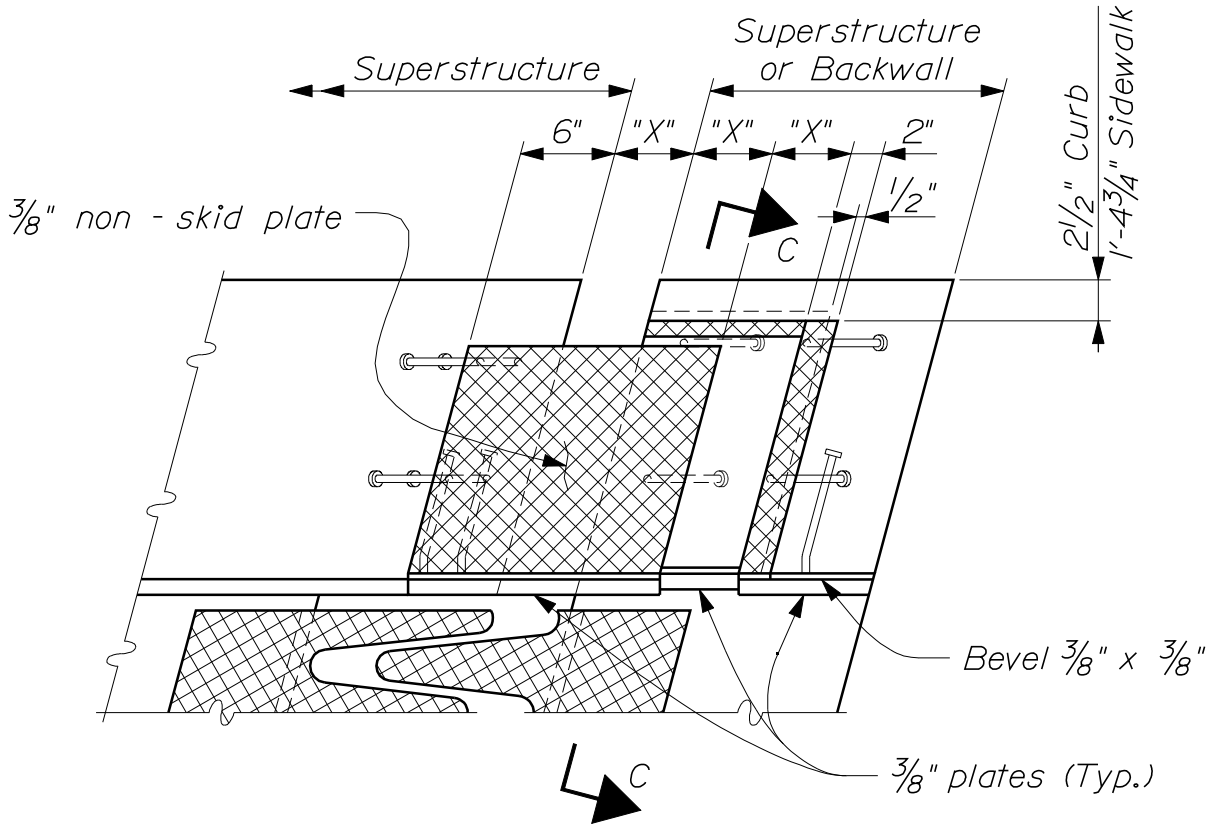

~ EXPANSION DAM PLAN ~

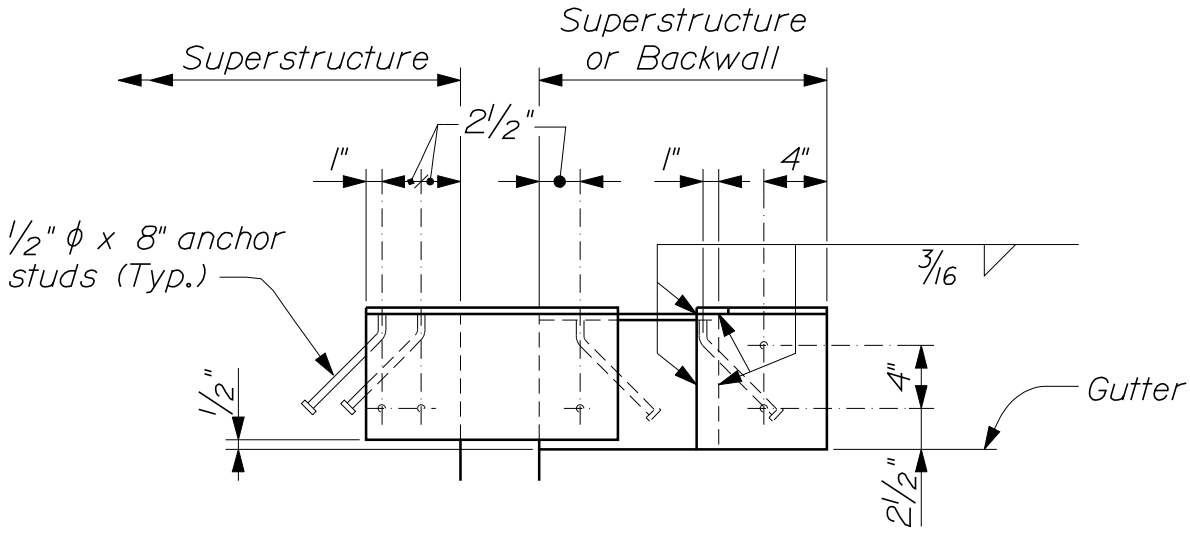

~ EXPANSION DAM ELEVATION ~

EXPANSION DEVICE - FINGER JOINT

521(09)

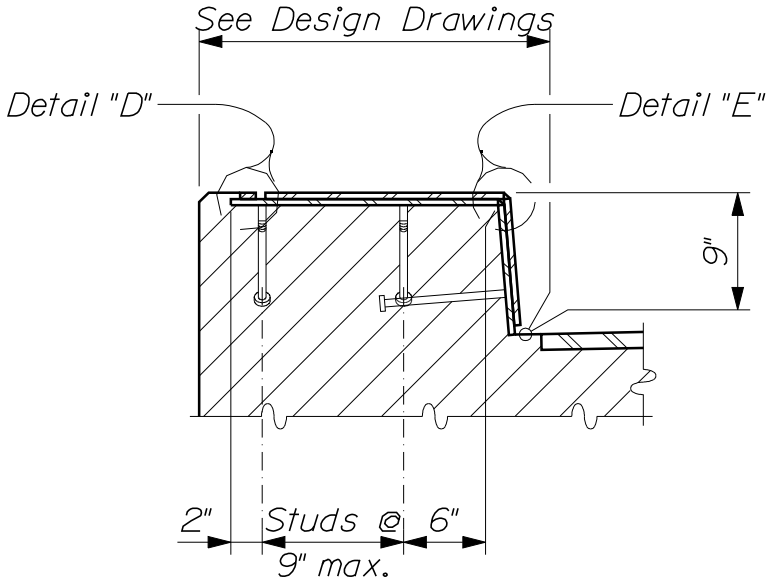

~ SECTION C-C ~

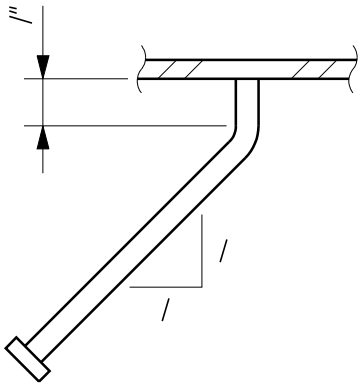

~ BENT STUD DETAIL ~

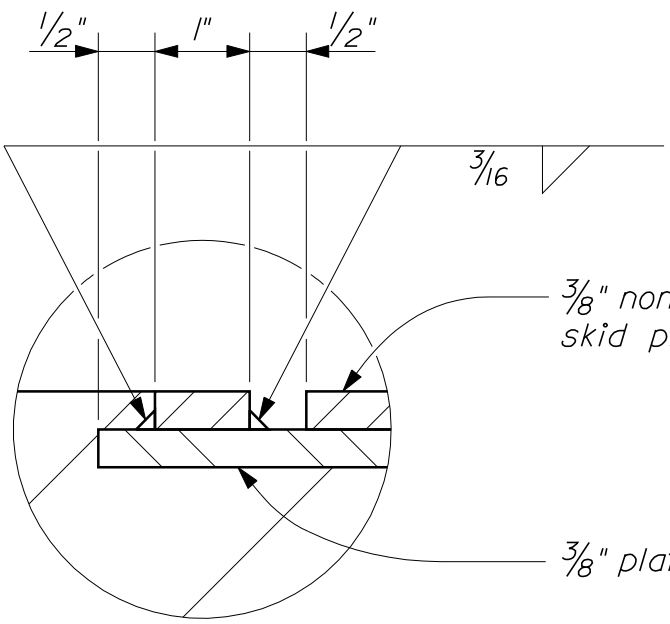

~ DETAIL "D" ~

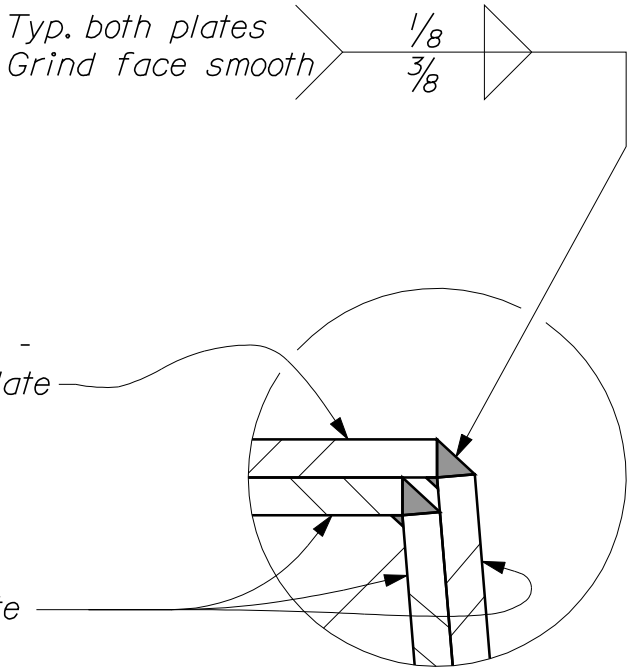

~ DETAIL "E" ~

EXPANSION DEVICE - FINGER JOINT

521(10)

EXPANSION DEVICE - FINGER JOINT

52(11)

TABLE OF DIMENSIONS

Type	Exp. Length	Skew	* "K"	"L"	"G"	"H"	"K"@45°	"J"@45°	"M"	"N"	"P"	"Q"	"X"@45°
A	100′ to 280′	0° to 5°	7"	4"	3"	3"	9"	2 1/8"	--	--	--	21"	3"
		> 5° to 10°	7 1/4"	4 1/4"	2 7/8"	3 1/8"	9 1/4"	2 1/8"	--	--	--	22"	3"
		> 10° to 20°	8"	4 3/4"	2 7/8"	3 1/8"	10"	2 1/8"	--	--	--	22"	3"
		> 20° to 30°	8 3/4"	5 1/4"	2 3/4"	3 1/4"	10 3/4"	2 1/8"	--	--	--	23"	3"
		> 30° to 40°	9 3/4"	5 3/4"	2 5/8"	3 3/8"	11 3/4"	2 1/8"	--	--	--	23"	3"
		> 40° to 50°	11 1/4"	6 1/2"	2 1/2"	3 1/2"	13 1/4"	2 1/8"	--	--	--	23"	3"
B	280′ to 440′	0° to 5°	9"	6"	3"	3"	12"	3 1/8"	--	--	--	23"	4"
		> 5° to 10°	9 1/4"	6 1/4"	2 7/8"	3 1/8"	12 1/4"	3 1/8"	--	--	--	24"	4"
		> 10° to 20°	10"	6 3/4"	2 7/8"	3 1/8"	13"	3 1/8"	--	--	--	24"	4"
		> 20° to 30°	10 3/4"	7 1/4"	2 3/4"	3 1/4"	13 3/4"	3 1/8"	--	--	--	25"	4"
		> 30° to 40°	12"	8"	2 3/4"	3 1/4"	15"	3 1/8"	--	--	--	25"	4"
		> 40° to 50°	13 1/2"	8 3/4"	2 5/8"	3 3/8"	16 1/2"	3 1/8"	--	--	--	25"	4"
C	440′ to 600′	0° to 10°	11 1/4"	8 1/4"	3"	3"	15 1/4"	4 1/8"	9"	4"	1 1/2"	26"	5"
		> 10° to 20°	12"	8 3/4"	2 7/8"	3 1/8"	16"	4 1/8"	10"	4"	1 1/2"	26"	5"
		> 20° to 30°	12 3/4"	9 1/4"	2 7/8"	3 1/8"	16 3/4"	4 1/8"	11"	4"	1 1/2"	26"	5"
		> 30° to 40°	14"	10"	2 3/4"	3 1/4"	18"	4 1/8"	11"	4"	1 1/2"	26"	5"
		> 40° to 50°	15 1/2"	10 3/4"	2 3/4"	3 1/4"	19 1/2"	4 1/8"	12"	4"	1 1/2"	26"	5"
D	600′ to 760′	0° to 10°	13 1/4"	10 1/4"	3"	3"	18 1/4"	5 1/8"	11"	5"	2"	30"	6"
		> 10° to 20°	14"	10 3/4"	2 7/8"	3 1/8"	19"	5 1/8"	12"	5"	2"	30"	6"
		> 20° to 30°	14 3/4"	11 1/4"	2 7/8"	3 1/8"	19 3/4"	5 1/8"	13"	5"	2"	30"	6"
		> 30° to 40°	16"	12"	2 7/8"	3 1/8"	21"	5 1/8"	13"	5"	2"	30"	6"
		> 40° to 50°	17 3/4"	13"	2 3/4"	3 1/4"	22 3/4"	5 1/8"	15"	5"	2"	30"	6"
E	760′ to 920′	0° to 10°	15 1/4"	12 1/4"	3"	3"	21 1/4"	6 1/8"	13"	6"	2 1/2"	36"	7"
		> 10° to 20°	16"	12 3/4"	2 7/8"	3 1/8"	22"	6 1/8"	14"	6"	2 1/2"	36"	7"
		> 20° to 30°	16 3/4"	13 1/4"	2 7/8"	3 1/8"	22 3/4"	6 1/8"	15"	6"	2 1/2"	36"	7"
		> 30° to 40°	18"	14"	2 7/8"	3 1/8"	24"	6 1/8"	15"	6"	2 1/2"	36"	7"
		> 40° to 50°	19 3/4"	15"	2 3/4"	3 1/4"	25 3/4"	6 1/8"	17"	6"	2 1/2"	36"	7"

NOTES:

1. Each "Expansion Device - Finger Joint" consists of one backwall element and one superstructure element (or two superstructure elements over piers) with expansion dams as required.

2. Refer to Design Drawings for dimensions, slopes, skew and all other information necessary to fabricate and install each Expansion Device.

3. The Expansion Device shall be fabricated to be installed normal to grade.

4. Anchor studs shall be installed using automatically timed stud welding equipment.

5. The Expansion Device shall be installed with a joint opening of "J" at 45 °F. The joint opening shall be adjusted for temperature in the field at the time of installation using the following formula:

$$0.00008 \times \text{"D"} \times \text{"}\Delta\ T\text{"} = \text{Adjustment (in inches)}$$

"D" is the distance in feet between the backwall and the nearest fixed bearings (for joints at abutments) or between the fixed bearings at either side of the expansion joint (for joints at piers). "Δ T" is the difference between the temperature of the structure and 45 °F.

A structure temperature above 45 °F will result in a smaller joint opening.

6. Welding to reinforcing steel will be allowed in the top of the abutment backwall above the block - out joint.

7. After the Expansion Device is in final position, weld the bar and angle of the adjustment devices together with a 1/4-in. fillet weld.

8. The slab and backwall concrete shall be in place before the Expansion Device is fixed in position. No allowance for movement due to dead load deflection is necessary.

9. The concrete in the block - out may be placed with the curb / sidewalk concrete. An approved epoxy bonding agent shall be applied to all vertical surfaces of the block - out before making the final concrete placement.

10. If there is a conflict between these Standard Details and the Design Drawings, the requirements of the Design Drawings shall be followed.

MATERIALS:

All shapes and plates ..... AASHTO M 270M/M 270, Grade 36

EXPANSION DEVICE - FINGER JOINT

521(12)

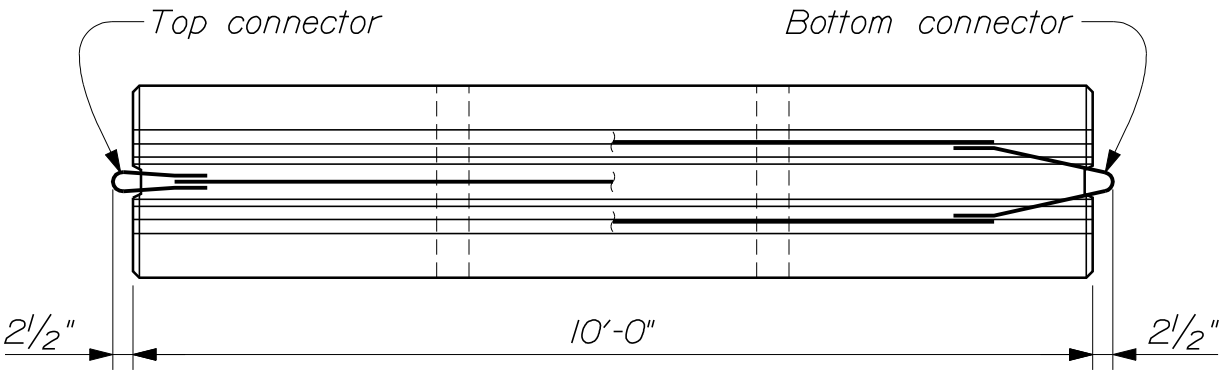

~ PLAN ~

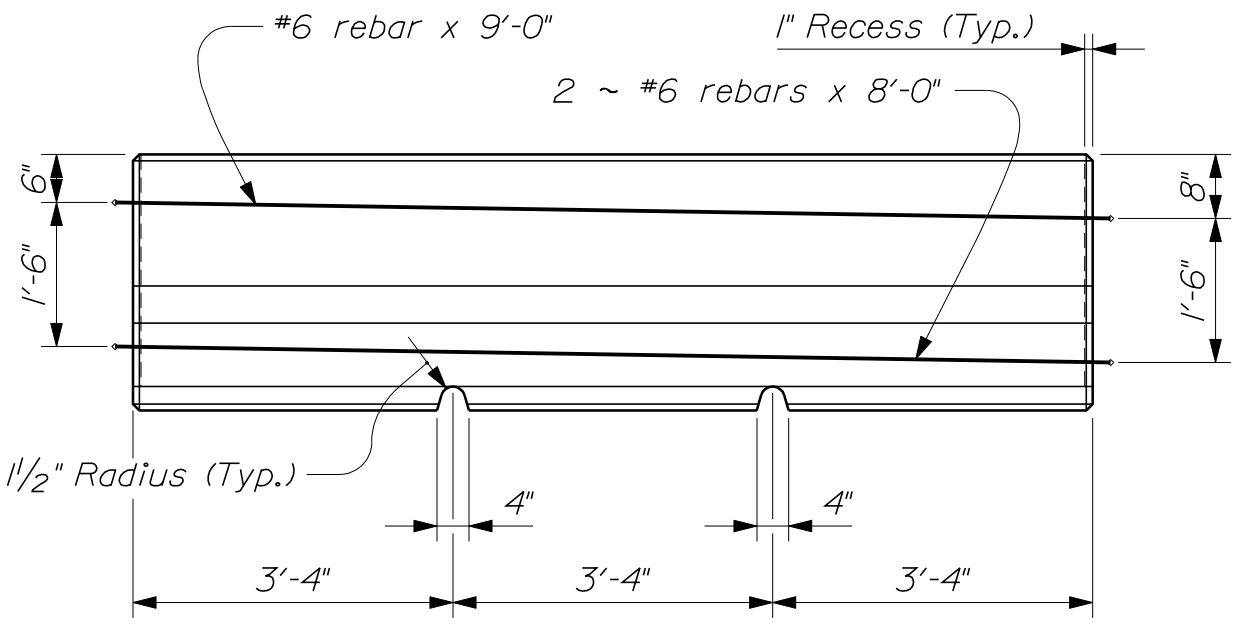

-- ELEVATION --

TEMPORARY CONCRETE BARRIER

526(01)

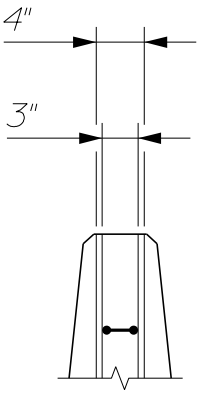

-- END RECESS --

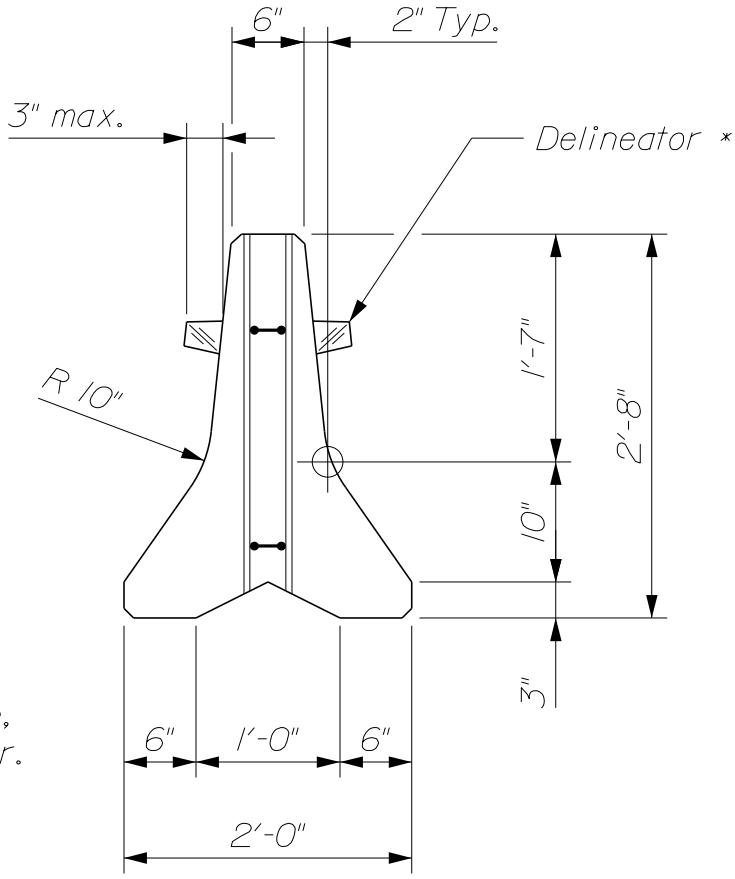

* Min. of 1 each side, every third barrier. (See Note No. 7)

-- BARRIER END ELEVATION --

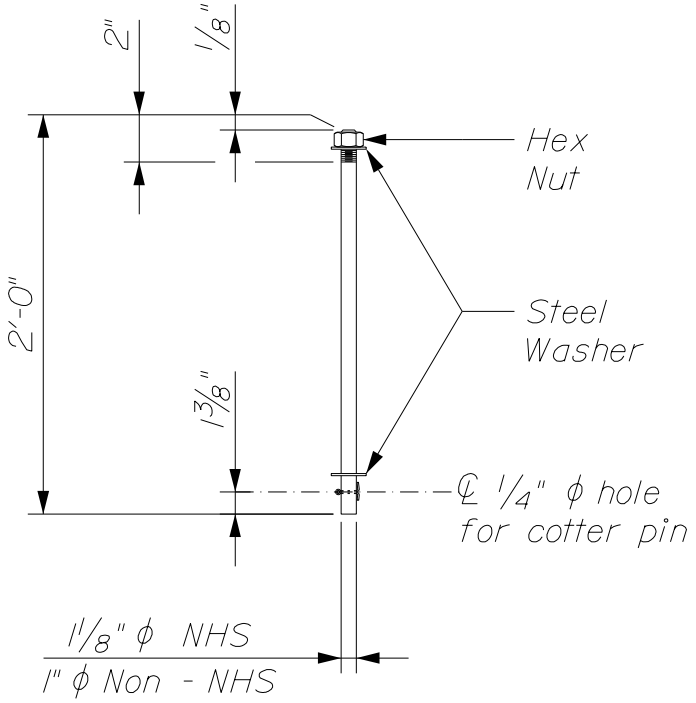

-- CONNECTING PIN --
NHS = National Highway System

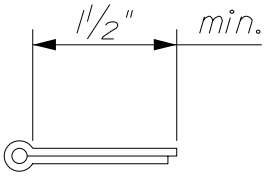

-- COTTER PIN --
3/16" SAE Standard

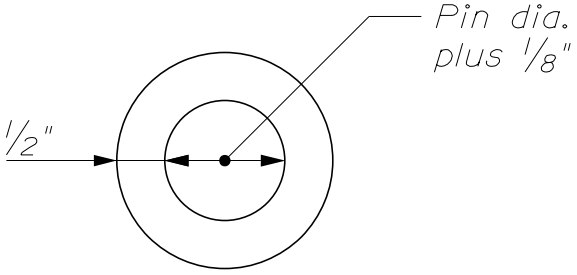

-- STEEL WASHER --
3/16" thick (galvanized)

TEMPORARY CONCRETE BARRIER

526(02)

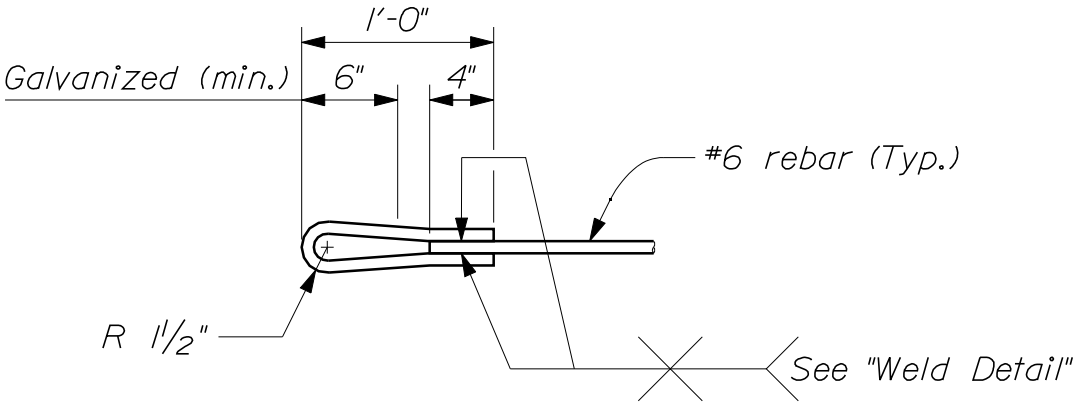

~ TOP CONNECTOR ~

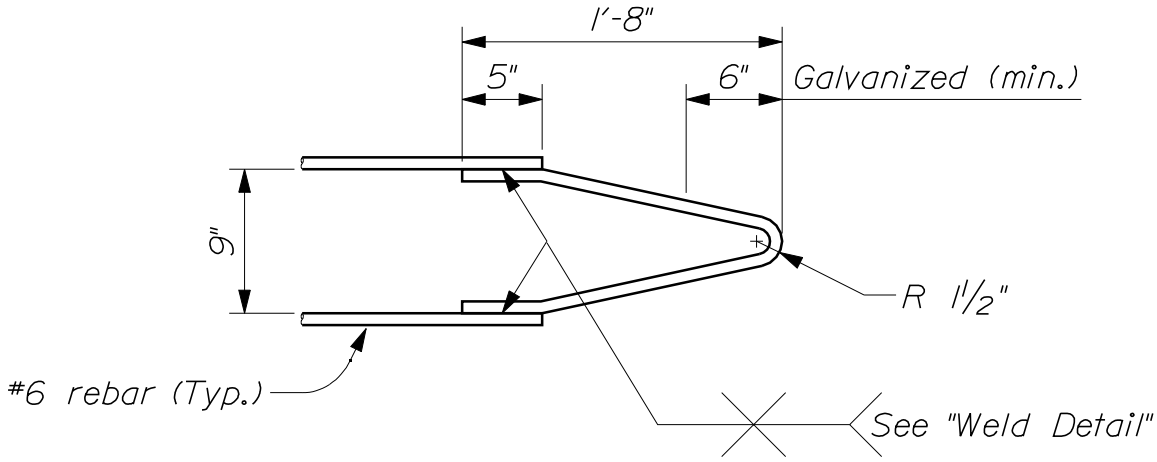

~ BOTTOM CONNECTOR ~

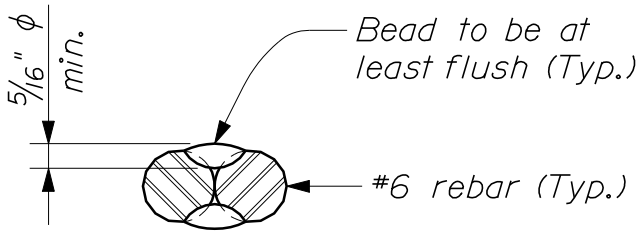

~ WELD DETAIL ~

TEMPORARY CONCRETE BARRIER

526(03)

NOTES:

1. Alternate barrier designs may be submitted for approval by the Resident.

2. Form a 3/4- in. chamfer or radius on all exposed edges.

3. Galvanize connectors after forming. Connectors may be completely galvanized.

4. Galvanize the connector pin assembly after fabrication. Burr the threads on the pin after installing the nut.

5. The reinforcement shown is primarily for the impact performance of the barrier. Additional reinforcement may be advisable for handling the barrier and for ensuring its integrity over its service life.

6. When serving the additional function of channelizing traffic, the barrier shall be supplemented by standard delineators, channelizing devices or pavement markings.

7. Barrier Deliniators shall be Bi-Directional with a minimum effective reflective area of 8.0 in.^{2} as approved by the Resident. The reflector shall preferably be of Methyl Methacrylate, and the housing of Acrylonitaile Butadiene Styrene. As an alternative reflectors may be mounted on the top of the barrier.

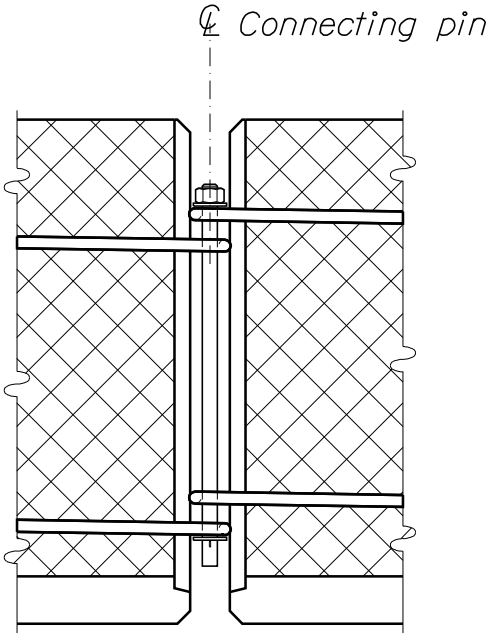

~ CONNECTION DETAIL ~

TEMPORARY CONCRETE BARRIER

526(04)

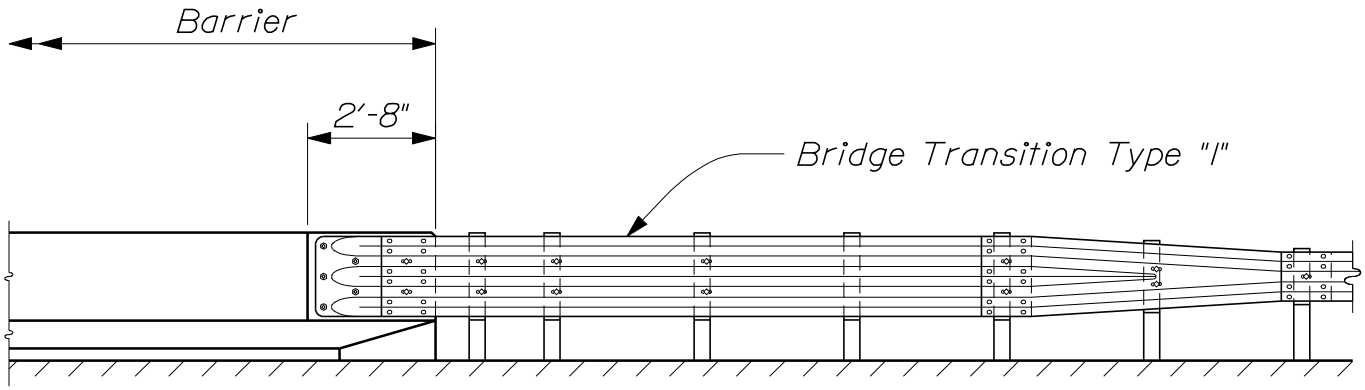

~ PERMANENT CONCRETE BARRIER TYPE IIIA ~

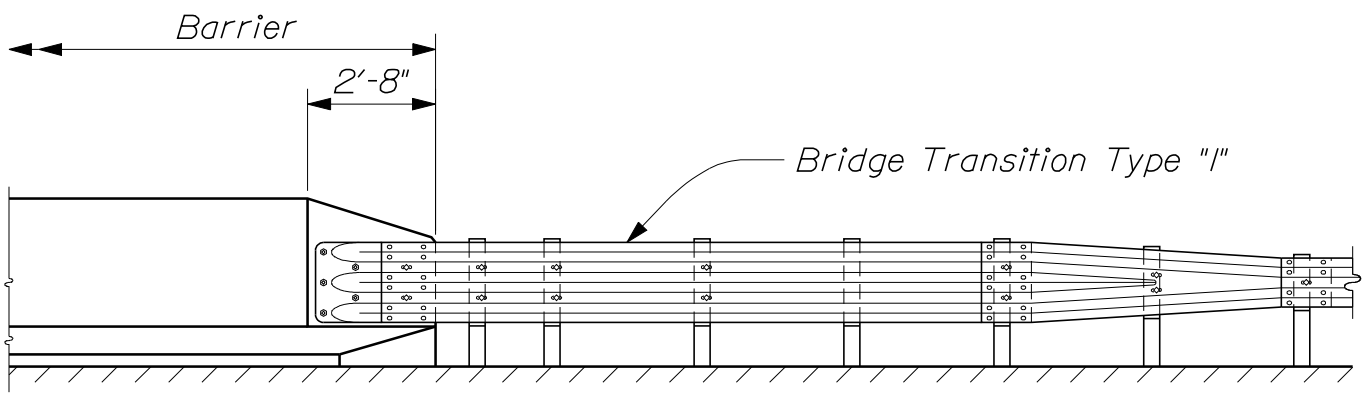

~ PERMANENT CONCRETE BARRIER TYPE IIIB ~

PERMANENT CONCRETE BARRIER

526(05)

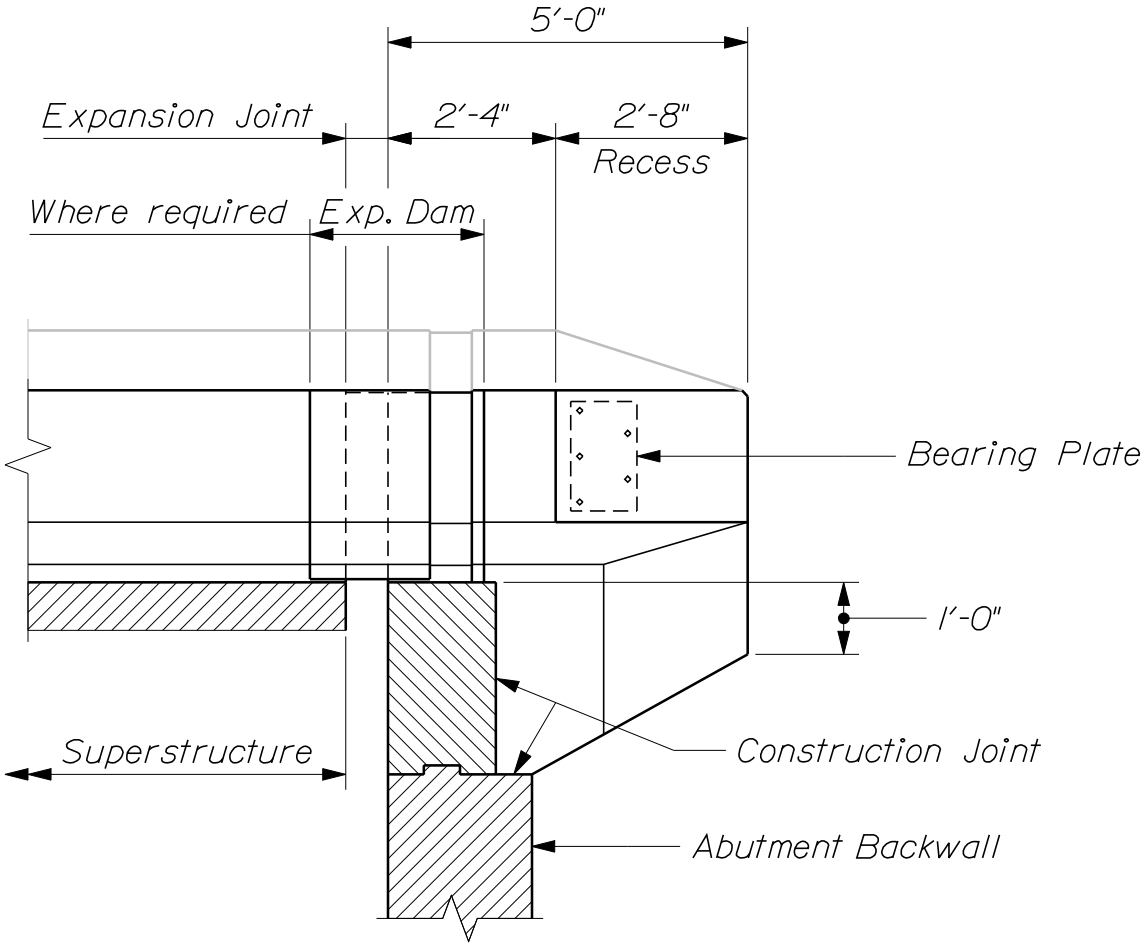

~ CANTILEVERED END AT EXPANSION JOINT ~

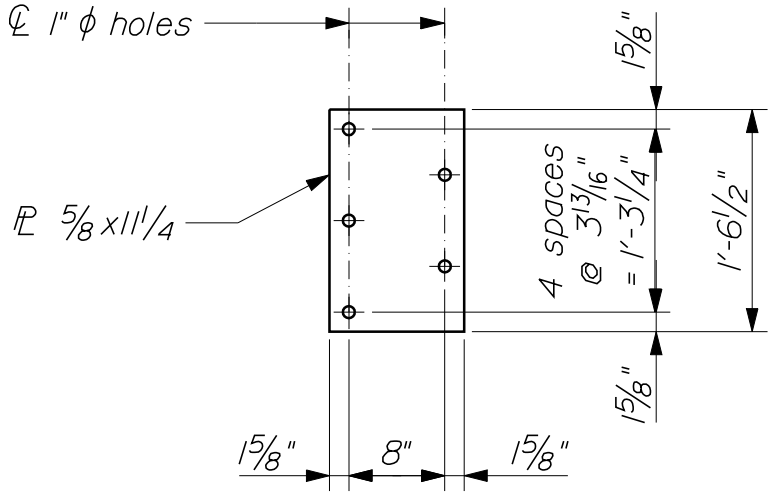

~ BEARING PLATE ~

PERMANENT CONCRETE BARRIER

526(06)

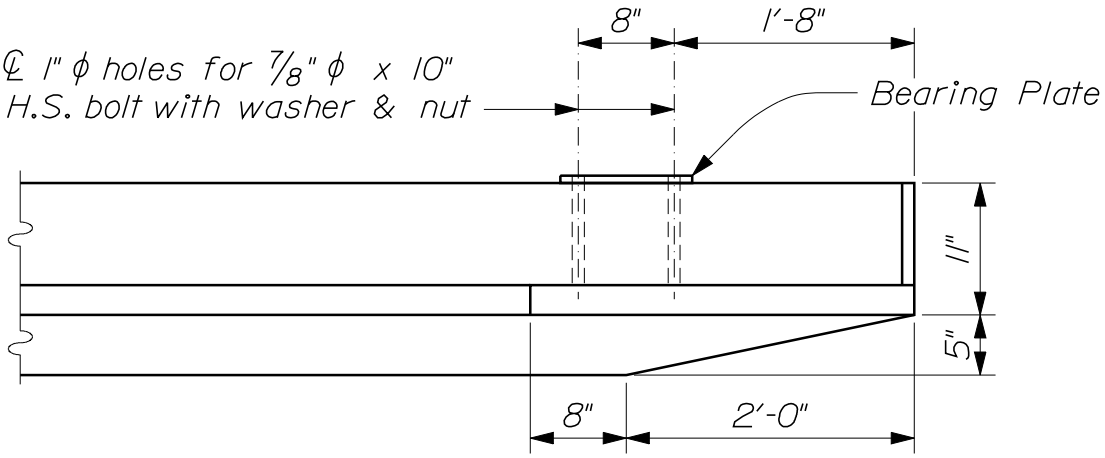

~ PLAN ~
(Type IIIA)

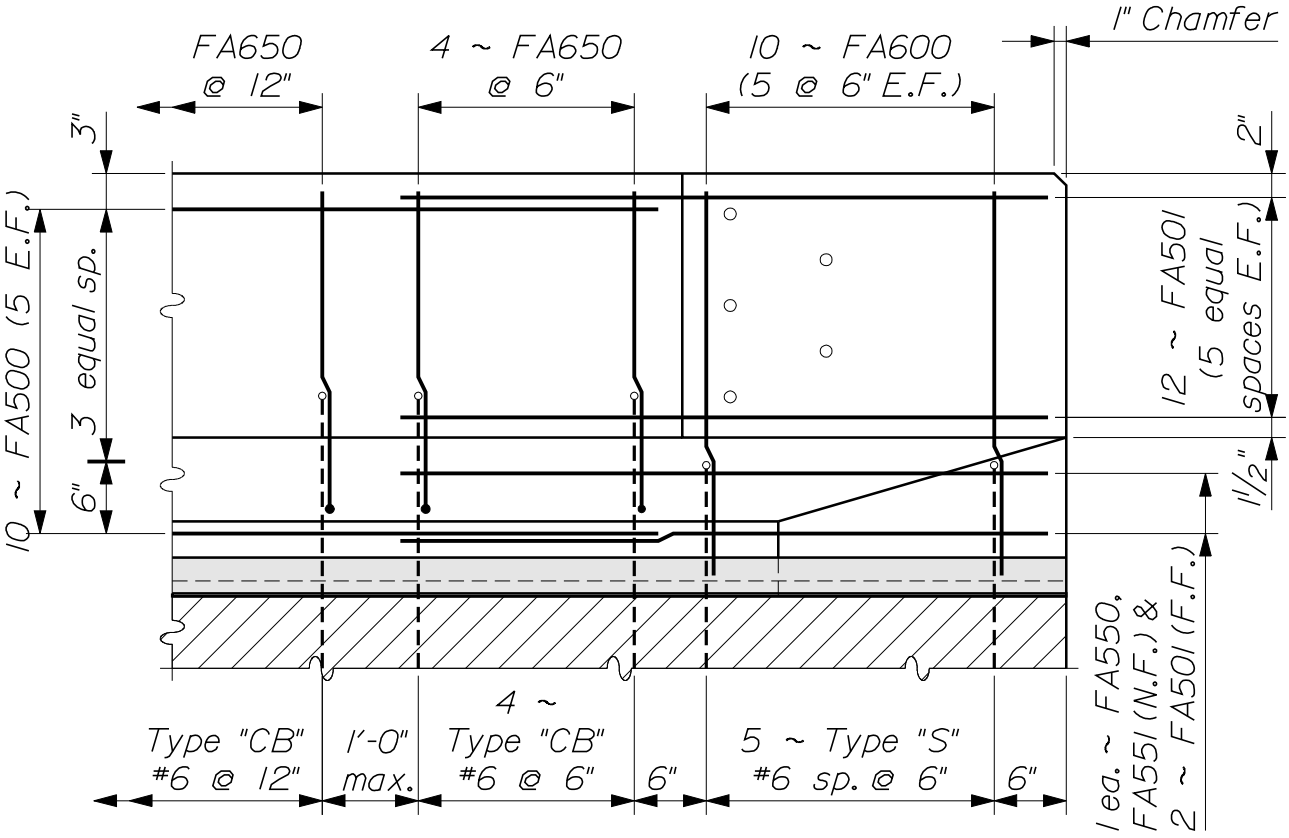

~ ELEVATION ~
(Type IIIA)

PERMANENT CONCRETE BARRIER

526(07)

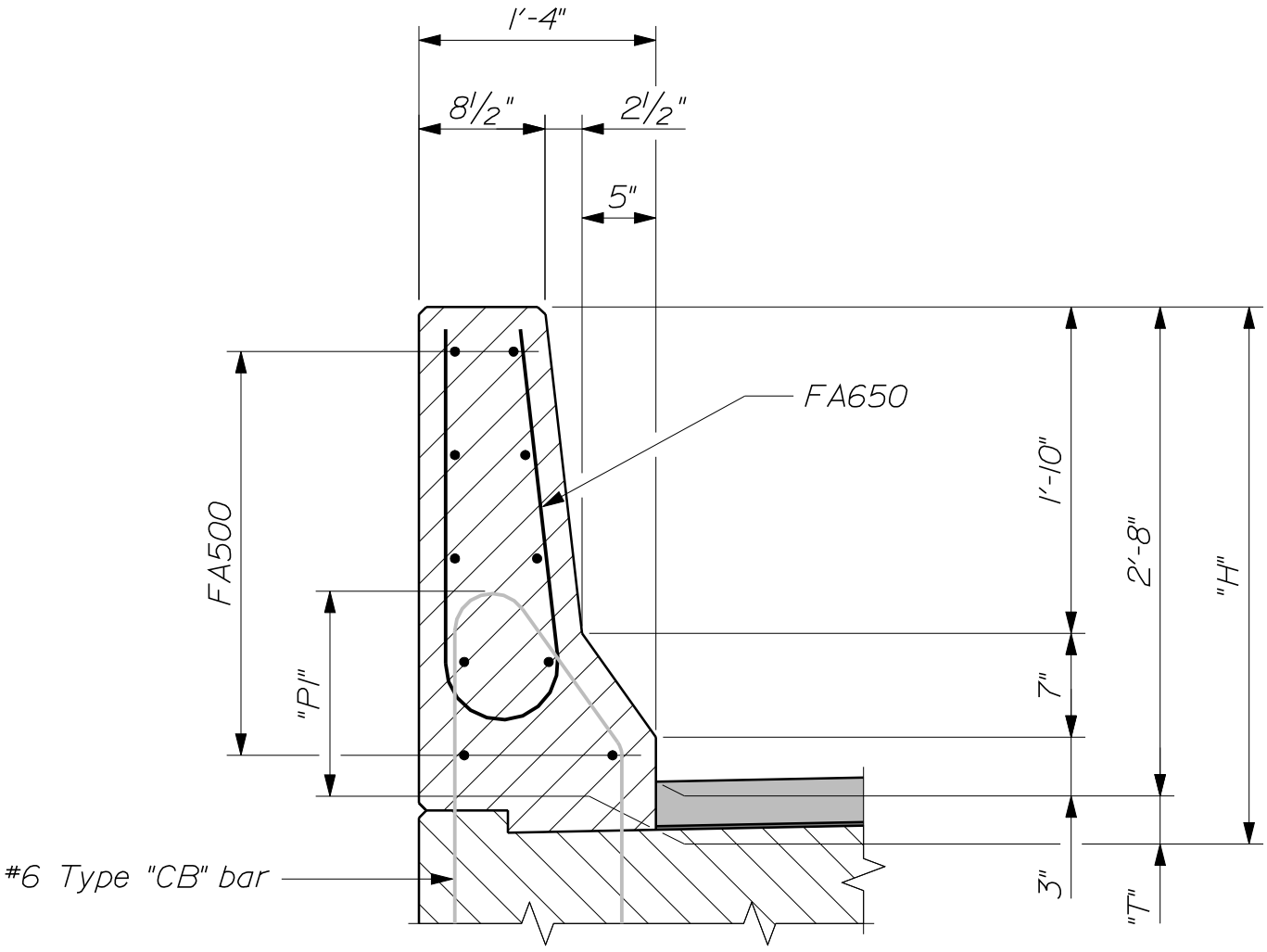

~ TYPICAL BARRIER SECTION ~

(Type IIIA)

For Wearing Surface ("T") details, refer to Section 502 ~ Concrete Curb

TABLE OF DIMENSIONS - TYPE IIIA				
Wearing Surface Type	"P1"	"P2"	"T"	"H"
Bituminous	1'-4 1/4"	11 1/4"	3 1/4"	2'-11 1/4"
Unreinforced Concrete	1'-3"	10"	2"	2'-10"
Integral	1'-1"	8"	0"	2'-8"

PERMANENT CONCRETE BARRIER

526(08)

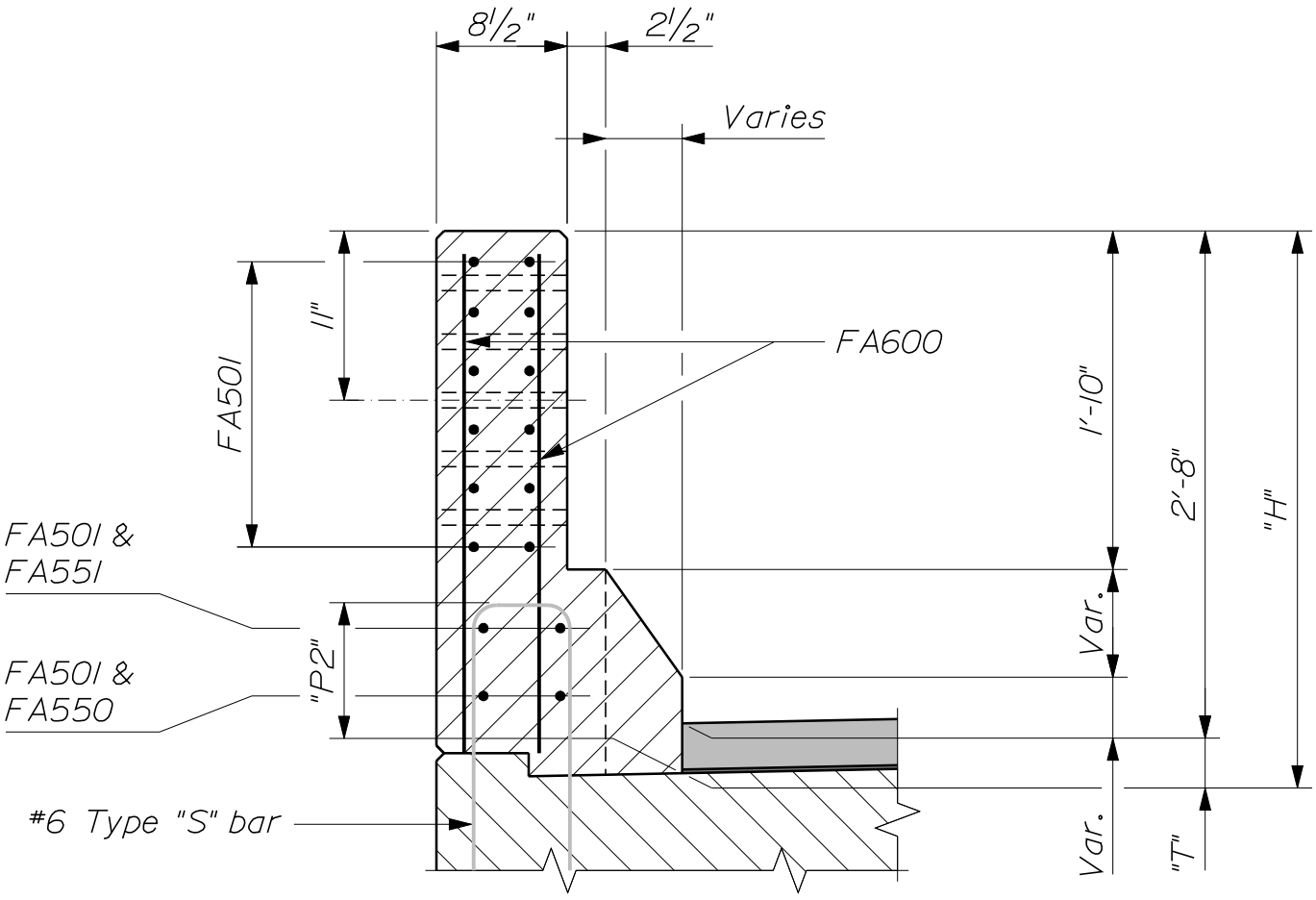

~ BARRIER RECESS SECTION ~

(Type IIIA)

For Wearing Surface ("T") details, refer to Section 502 ~ Concrete Curb

PERMANENT CONCRETE BARRIER

526(09)

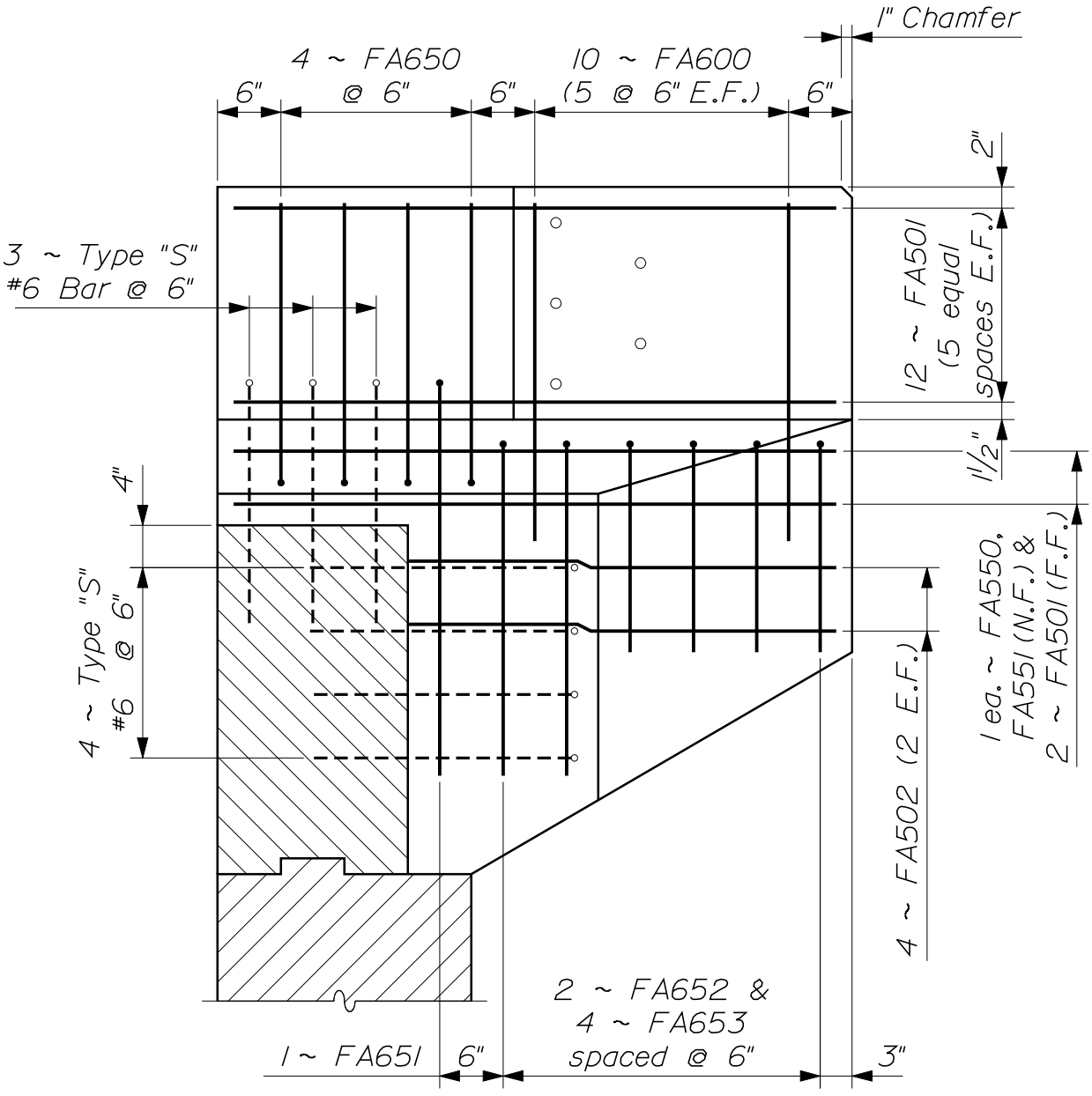

~ CANTILEVERED REINFORCING ELEVATION ~
(Type IIIA)

PERMANENT CONCRETE BARRIER

526(10)

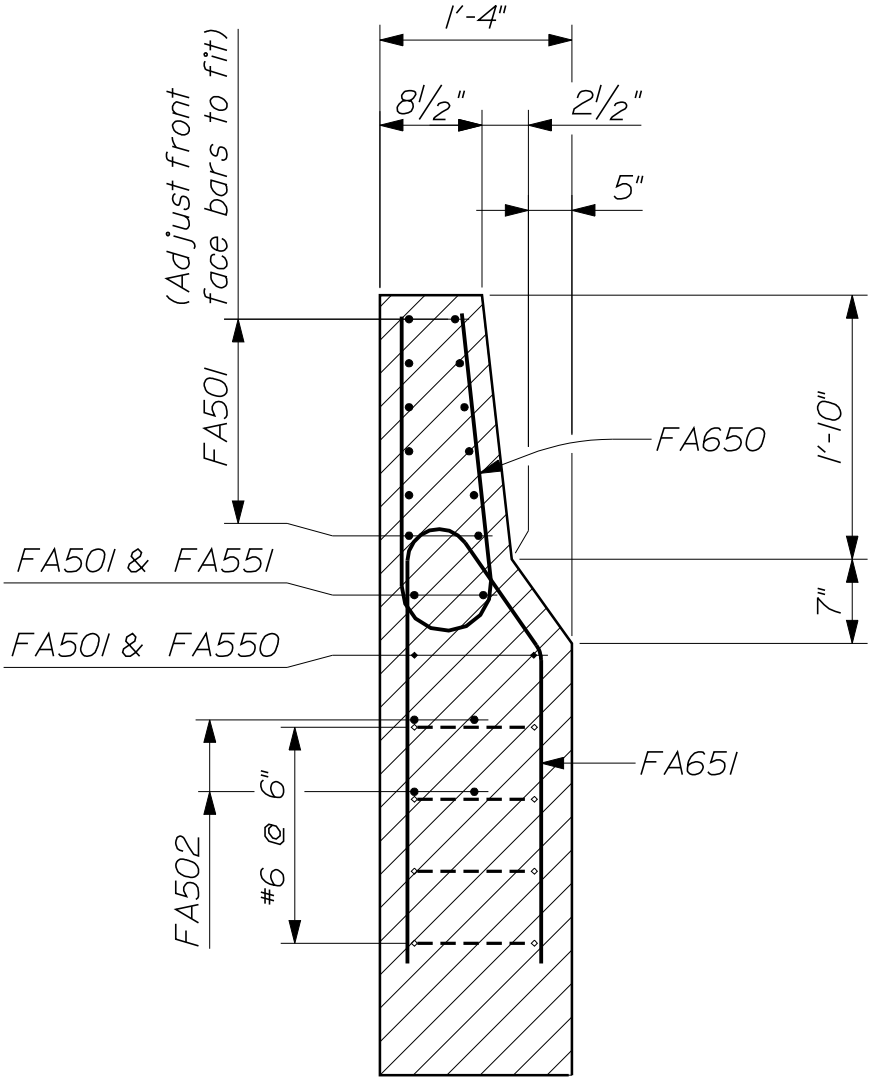

~ CANTILEVERED SECTION ~
(Type IIIA)

PERMANENT CONCRETE BARRIER

526(11)

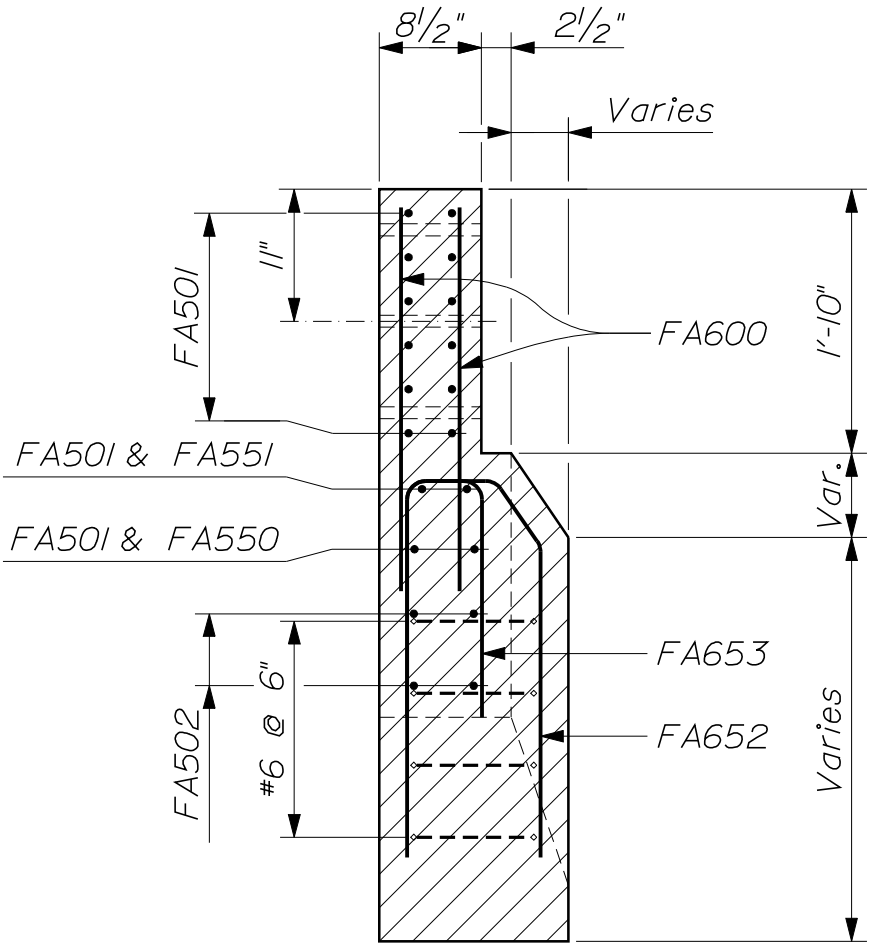

~ CANTILEVERED RECESS SECTION ~
(Type IIIA)

PERMANENT CONCRETE BARRIER

526(12)

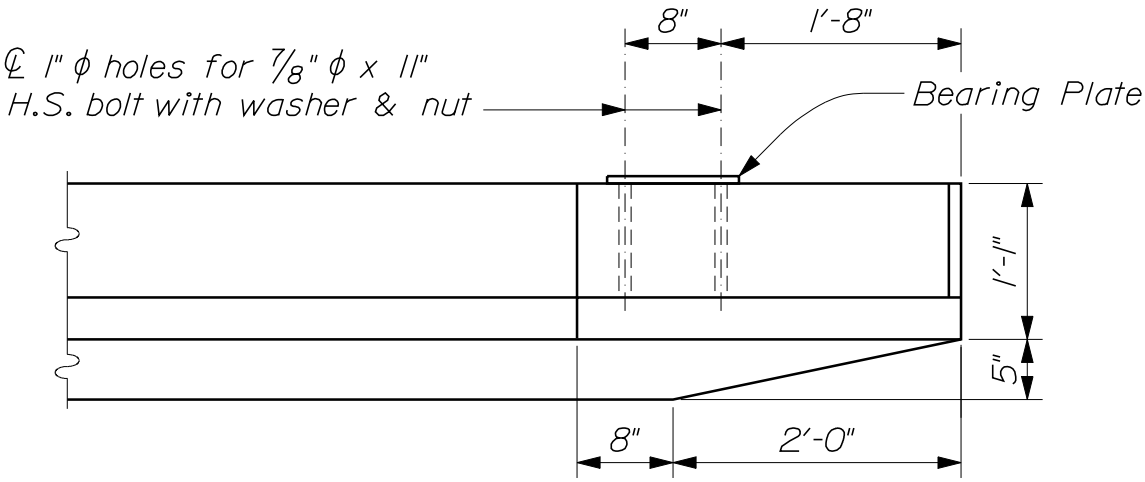

~ PLAN ~
(Type IIIB)

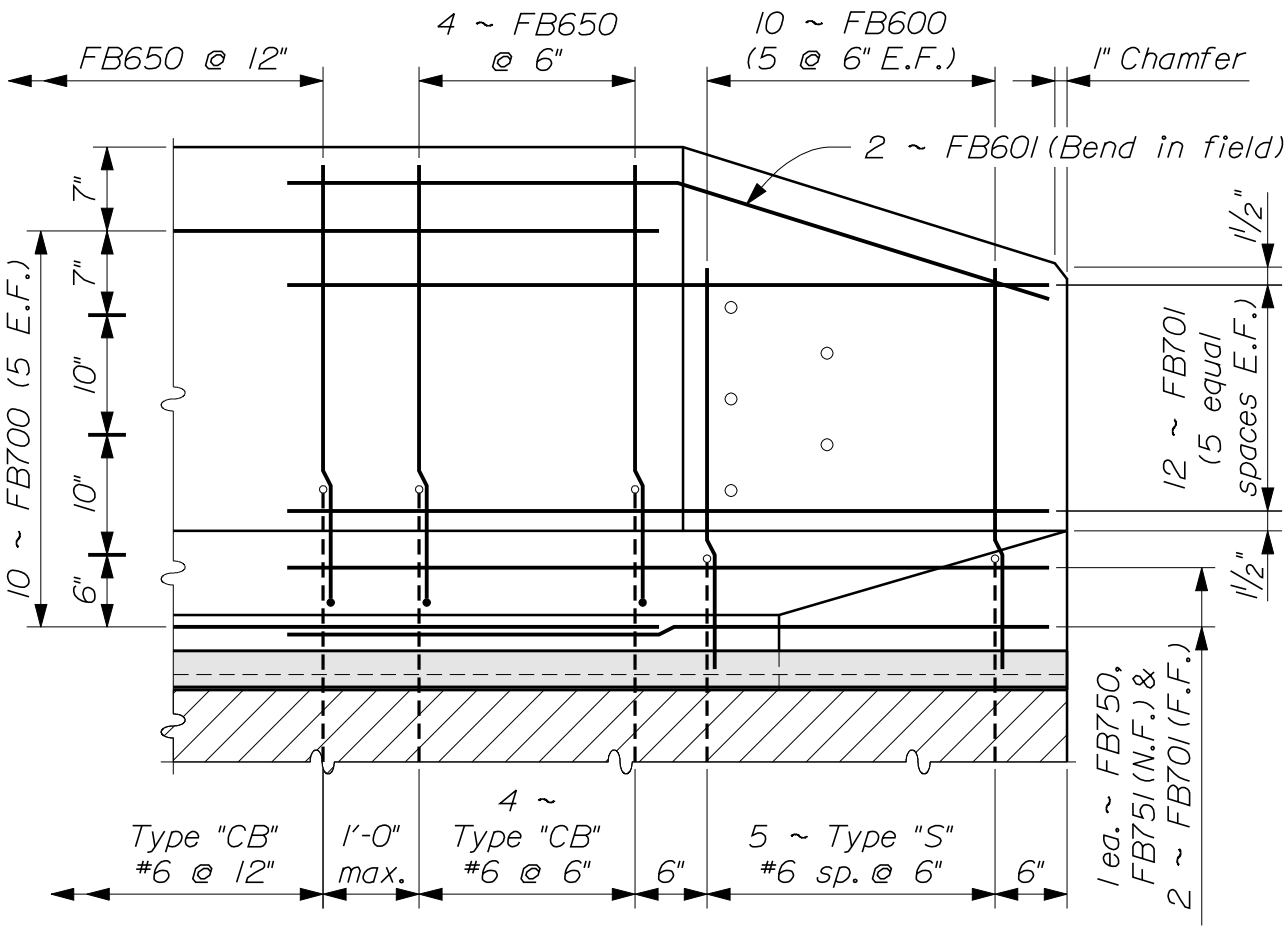

~ ELEVATION ~
(Type IIIB)

PERMANENT CONCRETE BARRIER

526(13)

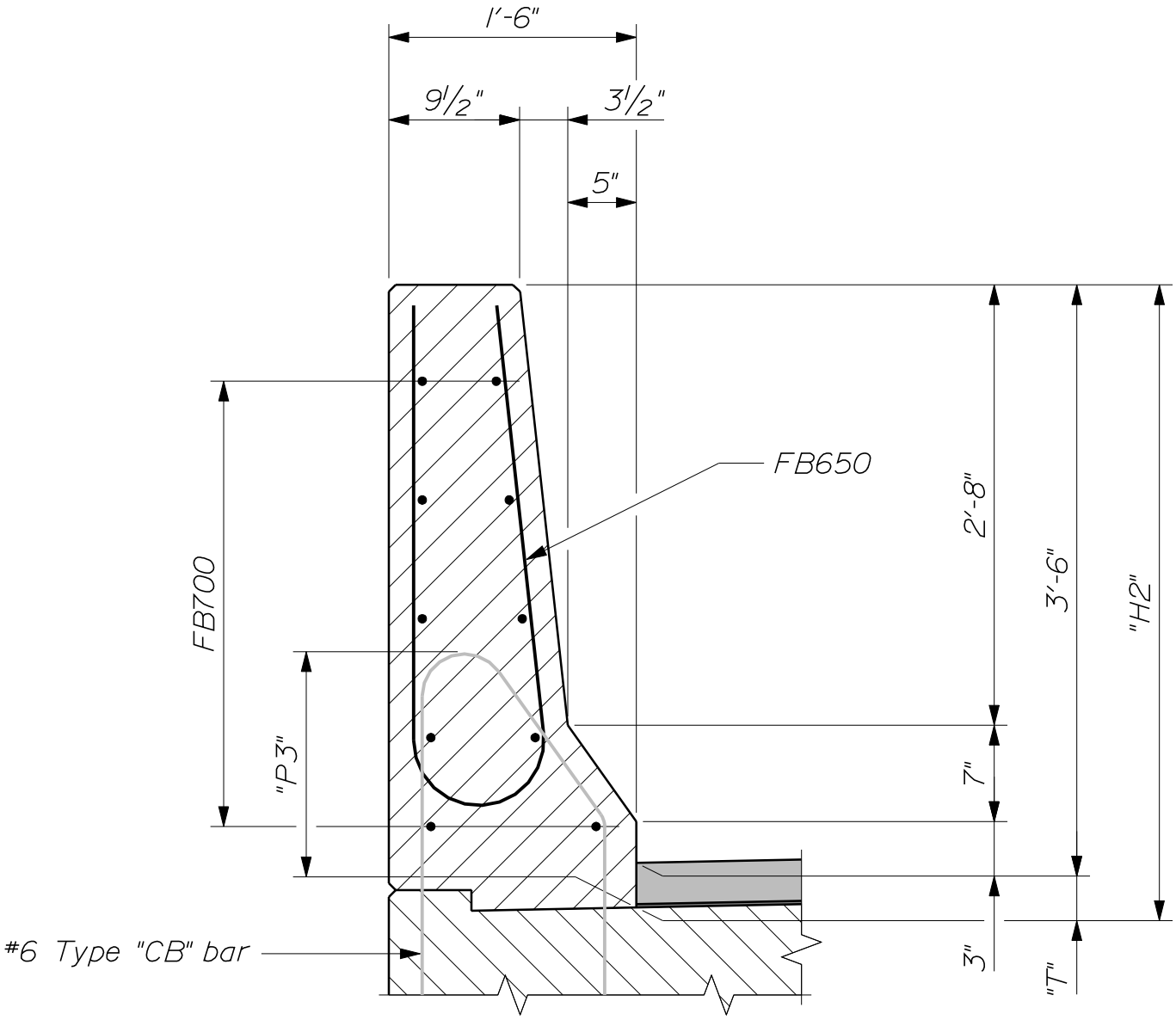

~ TYPICAL BARRIER SECTION ~

(Type IIIB)

For Wearing Surface ("T") details, refer to Section 502 ~ Concrete Curb

TABLE OF DIMENSIONS - TYPE IIIB				
Wearing Surface Type	"P3"	"P4"	"T"	"H2"
Bituminous	1'-6 3/4"	11 1/4"	3 1/4"	3'-9 1/4"
Unreinforced Concrete	1'-5 1/2"	10"	2"	3'-8"
Integral	1'-3 1/2"	8"	0"	3'-6"

PERMANENT CONCRETE BARRIER

526(14)

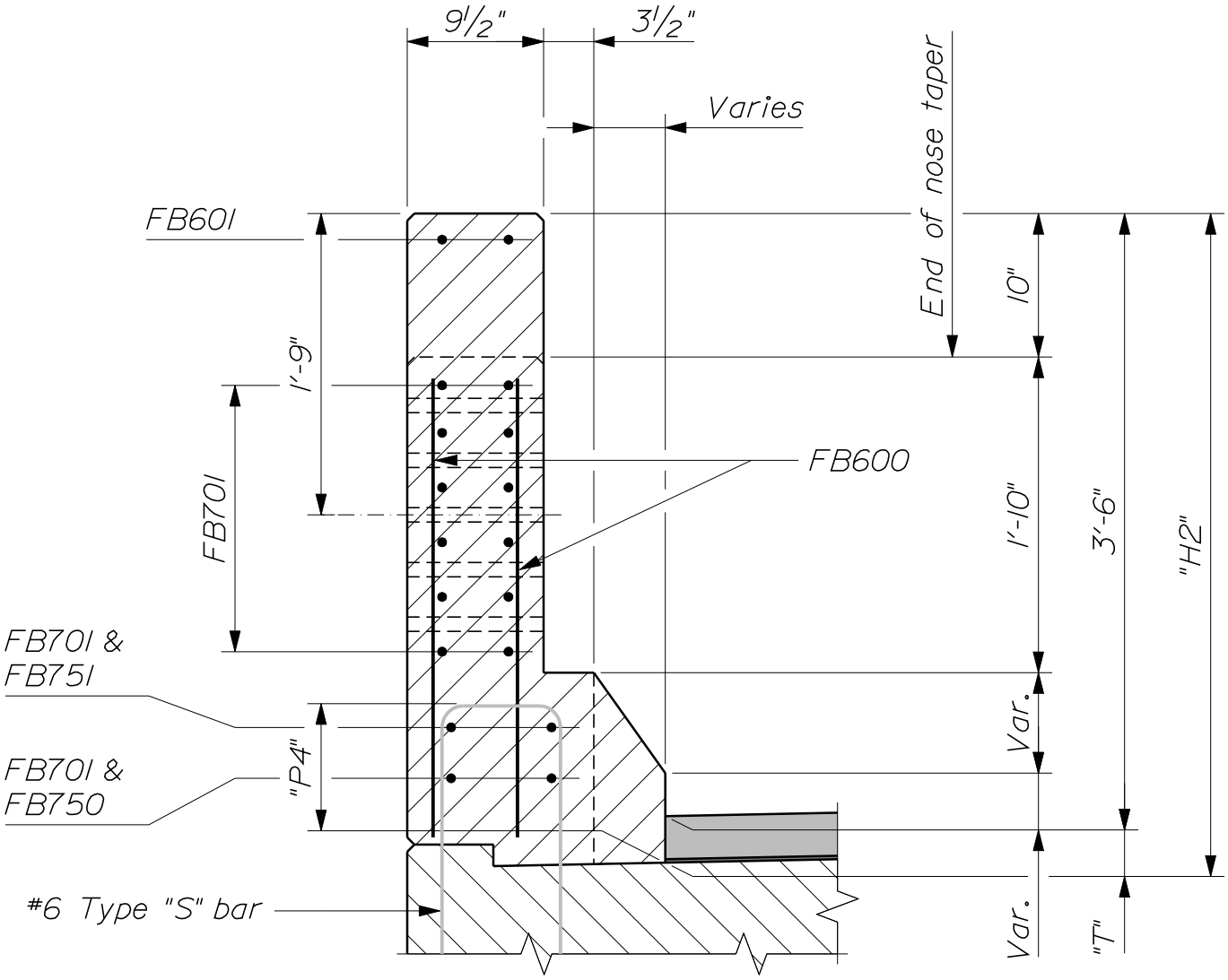

~ TYPICAL END SECTION ~

(Type IIIB)

For Wearing Surface ("T") details, refer to Section 502 ~ Concrete Curb

PERMANENT CONCRETE BARRIER

526(15)

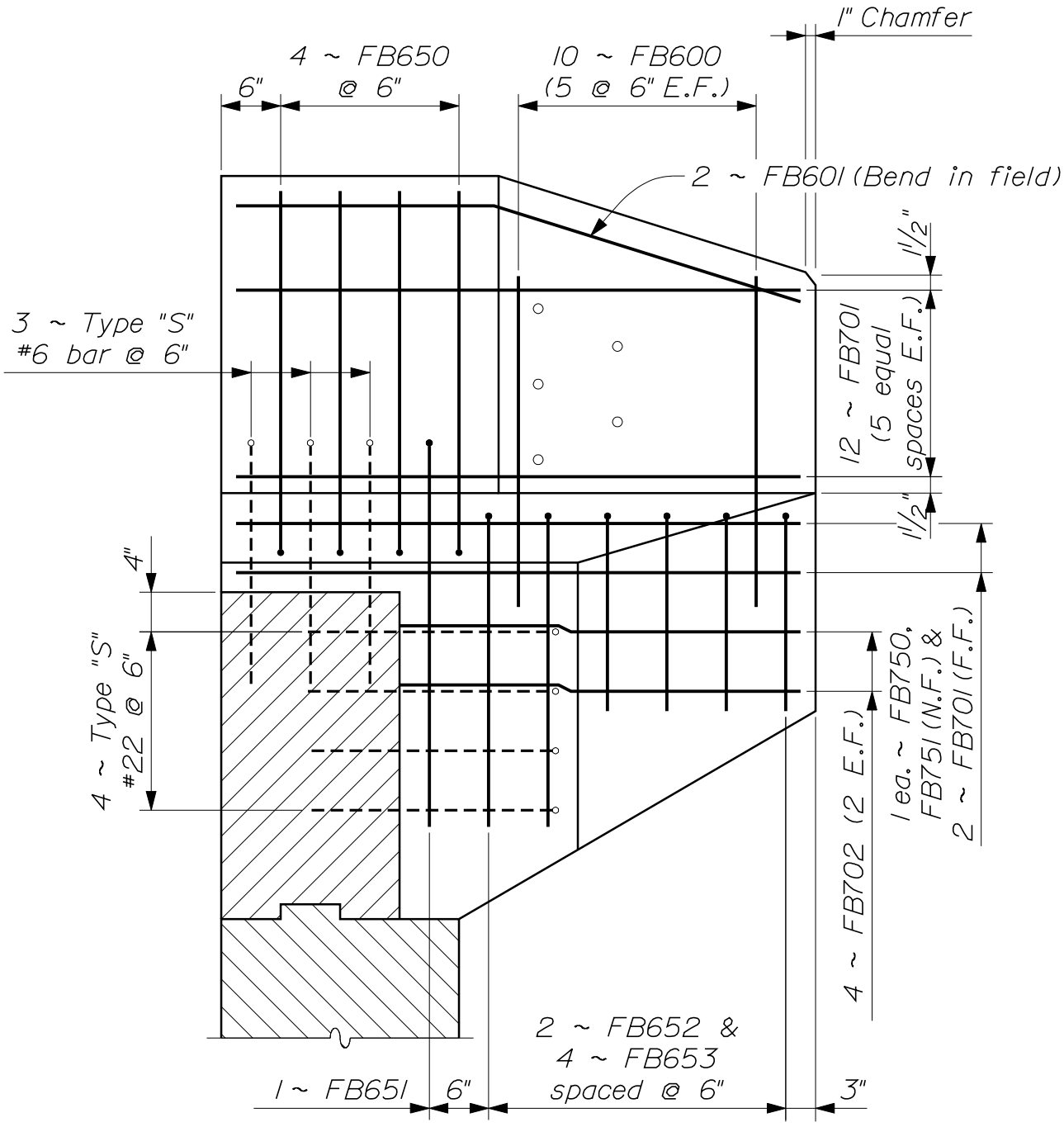

~ CANTILEVER REINFORCING ELEVATION ~
(Type IIIB)

PERMANENT CONCRETE BARRIER

526(16)

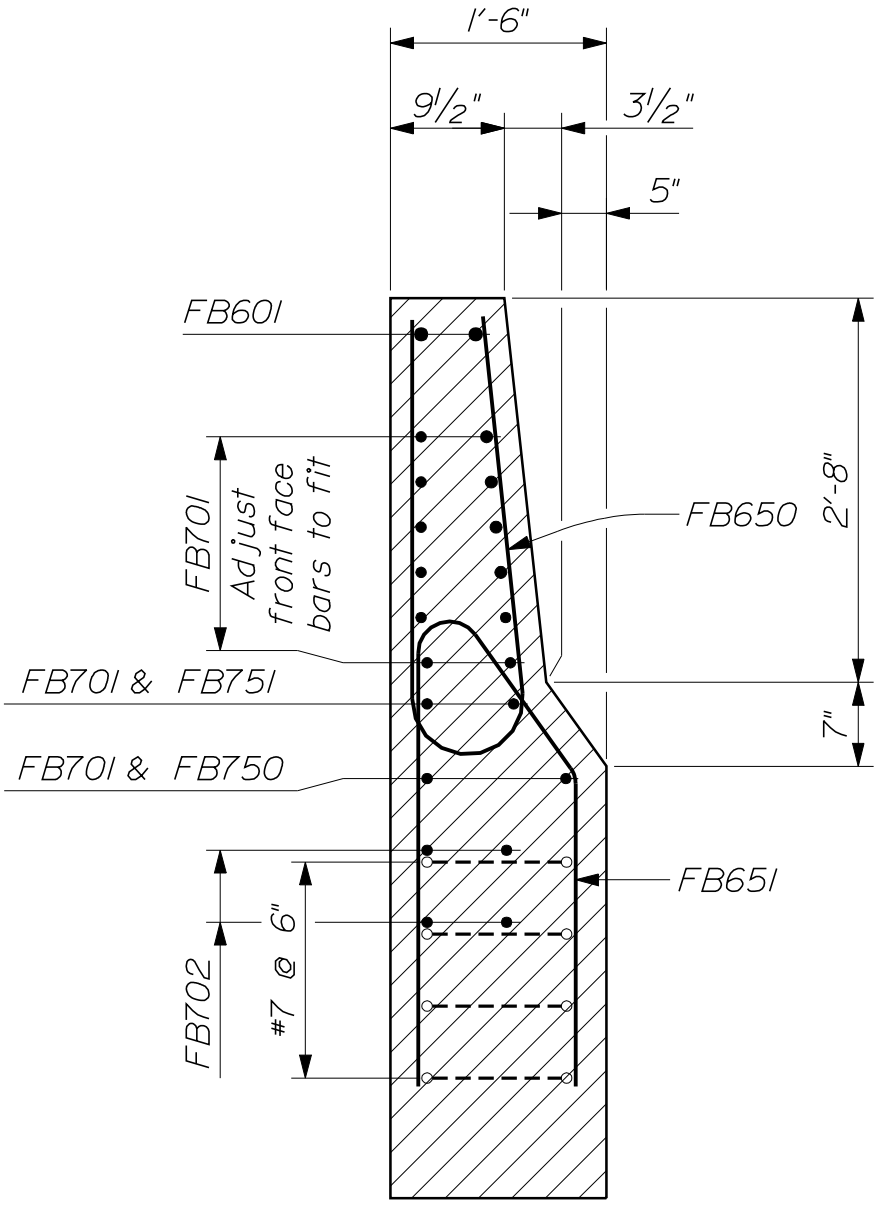

~ CANTILEVERED SECTION ~
(Type IIIB)

PERMANENT CONCRETE BARRIER

526(17)

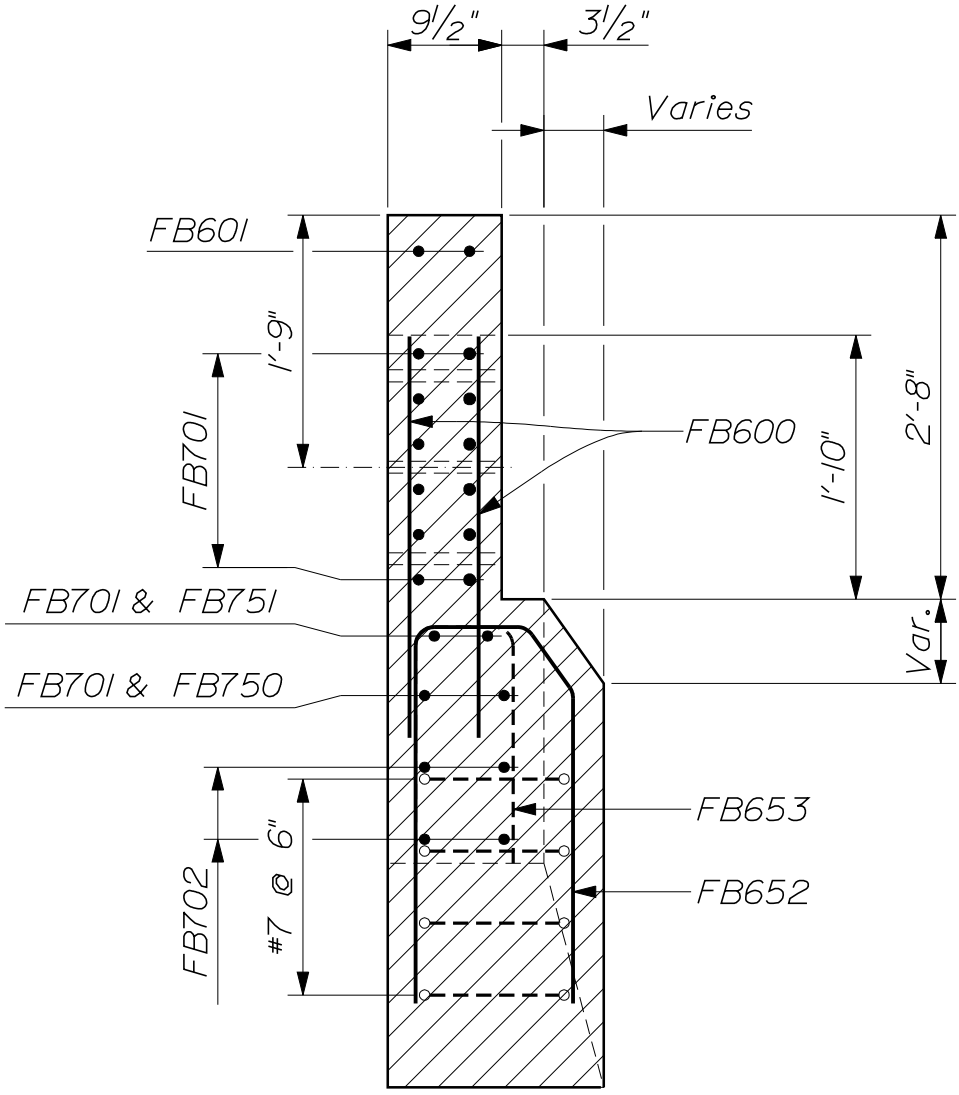

~ CANTILEVERED END SECTION ~
(Type IIIB)

PERMANENT CONCRETE BARRIER

526(18)

BARRIER TYPE IIIA REINFORCING STEEL				
Mark	With Normal End		With Cantilevered End	
	Quantity	Length	Quantity	Length
FA500	As req'd	30'-0" max.	As req'd	30'-0" max.
FA501	14	4'-6"	14	4'-8"
FA550	1	4'-7"	1	4'-10"
FA551	1	4'-7"	1	4'-10"
FA600	10	2'-8"	10	2'-8"
FA650	As req'd	4'-10"	As req'd	4'-11"
FA651	--	--	1	6'-6"
FA652	--	--	2	6'-1"
FA653	--	--	4	3'-11"

(X) denotes cantilevered end dimension

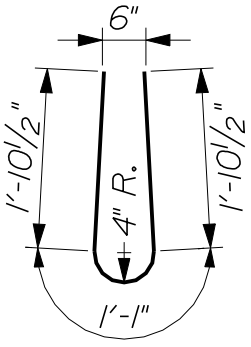

~ FA650 ~

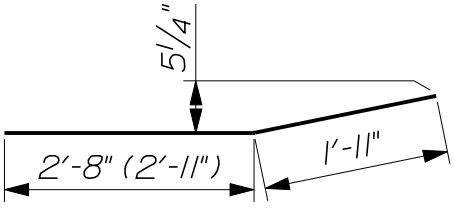

~ FA550 ~

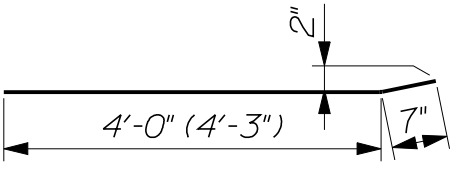

~ FA551 ~

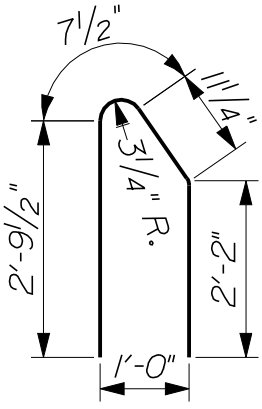

~ FA651 ~

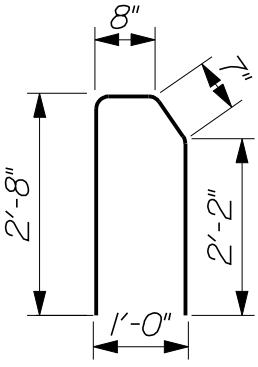

~ FA652 ~

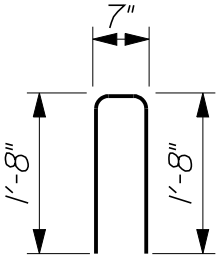

~ FA653 ~

PERMANENT CONCRETE BARRIER

526(19)

BARRIER TYPE IIIB REINFORCING STEEL				
Mark	With Normal End		With Cantilevered End	
	Quantity	Length	Quantity	Length
FB600	10	2'-10"	10	2'-10"
FB601	2	5'-5"	2	4'-9"
FB650	As req'd	6'-7"	As req'd	6'-7"
FB651	--	--	1	7'-0"
FB652	--	--	2	6'-3"
FB653	--	--	4	4'-1"
FB700	As req'd	60'-0" max.	As req'd	60'-0" max.
FB701	16	5'-4"	16	4'-8"
FB702	--	--	4	3'-4"
FB750	1	5'-5"	1	4'-10"
FB751	1	5'-5"	1	4'-10"

(X) denotes cantilevered end dimension

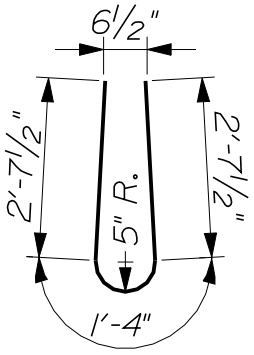

~ FB650 ~

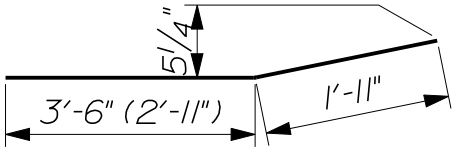

~ FB750 ~

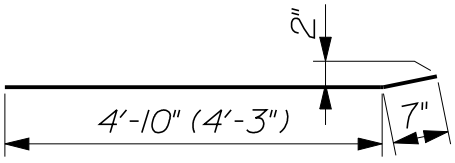

~ FB751 ~

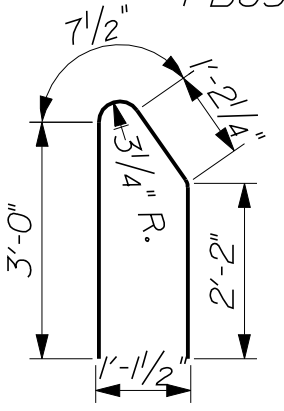

~ FB651 ~

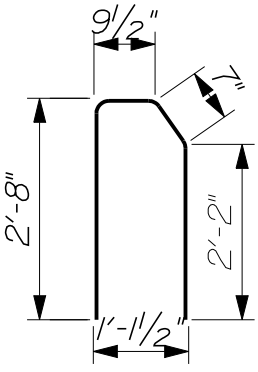

~ FB652 --

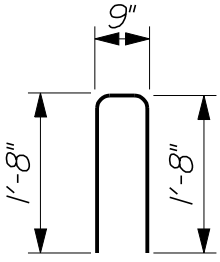

~ FB653 --

PERMANENT CONCRETE BARRIER

526((20)

NOTES:

1. All work and materials shall conform to the provisions of Standard Specifications Section 526 - Concrete Barrier.

2. Reinforcing bar designations Type "S" and "CB" refer to type - bending diagrams as shown on the main Reinforcing Steel Schedule. These bars are detailed on the Design Drawings and are included for payment in the Reinforcing Steel pay items.

3. Reinforcing steel shall have a minimum concrete cover of 1½ inches, except that stirrups Type "S" and "CB" shall have a minimum concrete cover of 2 inches. .

4. The first digit following the letters of the mark indicates the size of the reinforcing bar. (FA600 = #6 bar.) All dimensions are out - to - out of bar.

5. Minimum lap splice lengths are 2'-0" for FA500 and 3'-2" for FB700.

6. The quantities of reinforcing bars shown are for one barrier end only.

7. Bolt holes in concrete shall be formed by a method approved by the Resident.

8. Payment for threaded rods and bearing plates will be considered incidental to the concrete barrier pay item.

9. Permanent Concrete Barrier is designed for attachment of Bridge Transition Type "1" unless otherwise indicated on the Design Drawings. Refer to Section 606 for details.

10. After installation of the guardrail is complete, upset the threads on the threaded rods in 3 places around each rod, at the junction of the nut and the exposed thread, with a center punch or similar tool.

11. If there is a conflict between these Standard Details and the Design Drawings, the requirements of the Design Drawings shall be followed.

MATERIALS:

Concrete	Class "LP"
Reinforcing Steel	AASHTO M 31M/M 31, Grade 60
Bearing Plate	AASHTO M 270M/M 270, Grade 36 (Galvanized)
Threaded rods	AASHTO M 314, Grade 105 (Galvanized)

PERMANENT CONCRETE BARRIER

526(21)

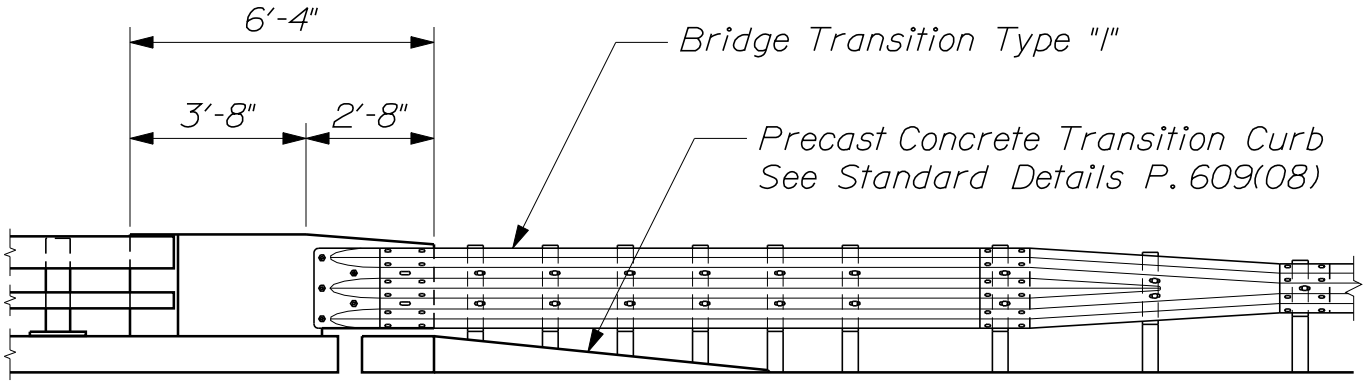

~ CONCRETE TRANSITION BARRIER ~
(2 - Bar Traffic Railing)

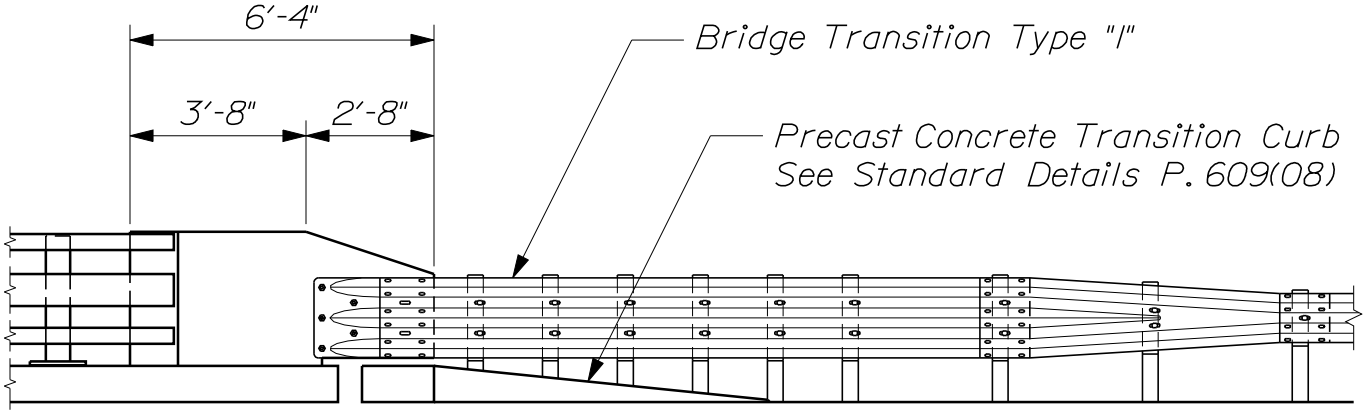

~ CONCRETE TRANSITION BARRIER ~
(3 - Bar Traffic / Bicycle Railing)
(4 - Bar Traffic / Bicycle Railing similar)

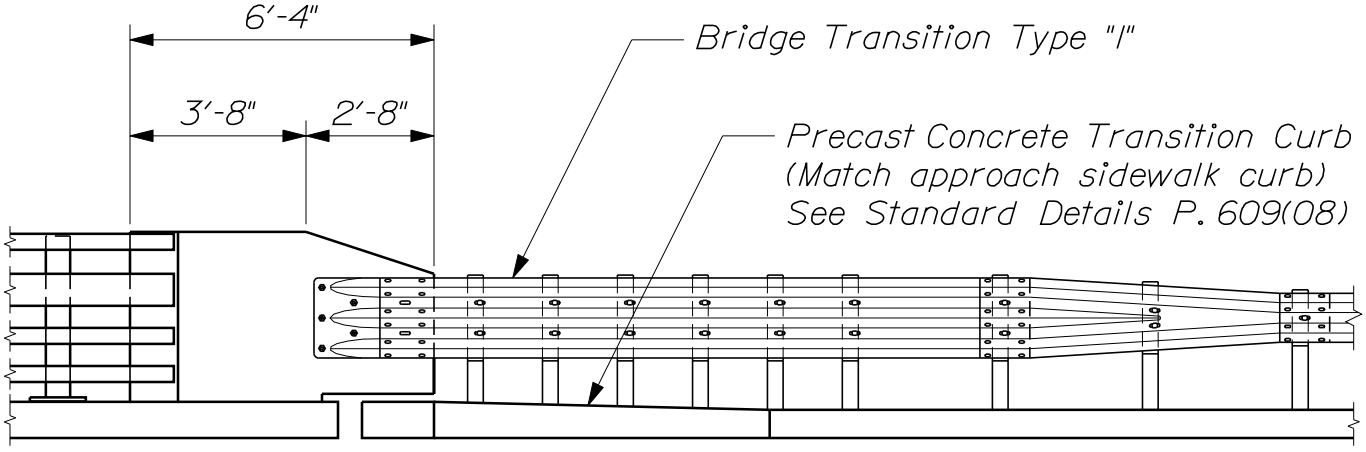

~ CONCRETE TRANSITION BARRIER ~
(4 - Bar Traffic / Pedestrian Railing)

CONCRETE TRANSITION BARRIER

526(22)

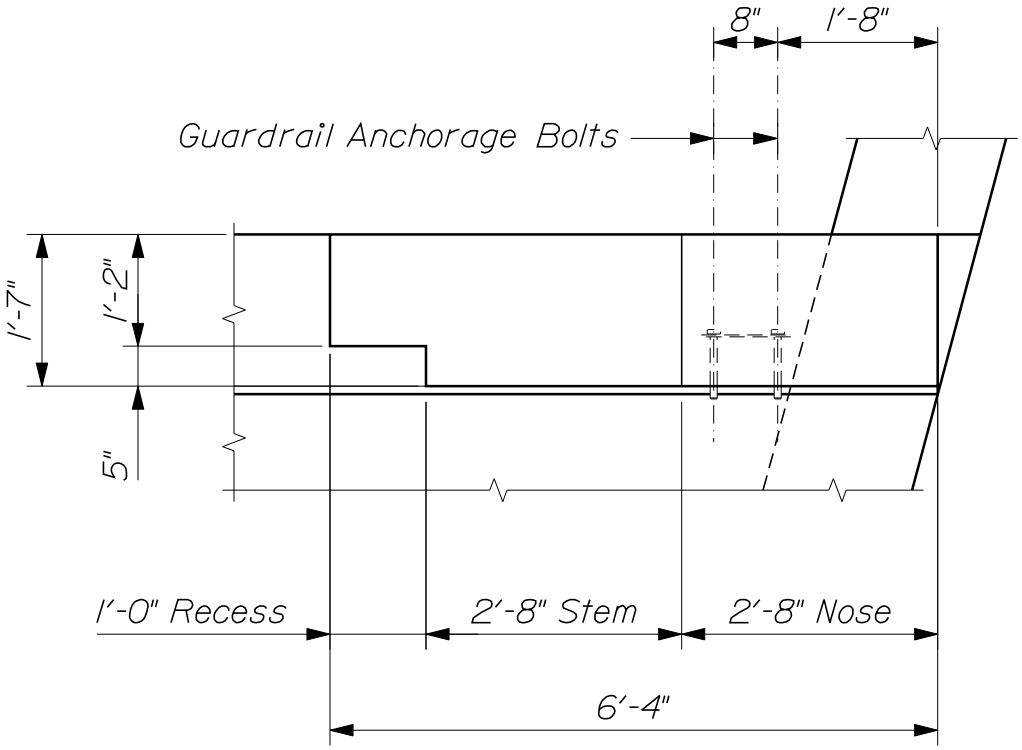

~ TRANSITION BARRIER PLAN ~

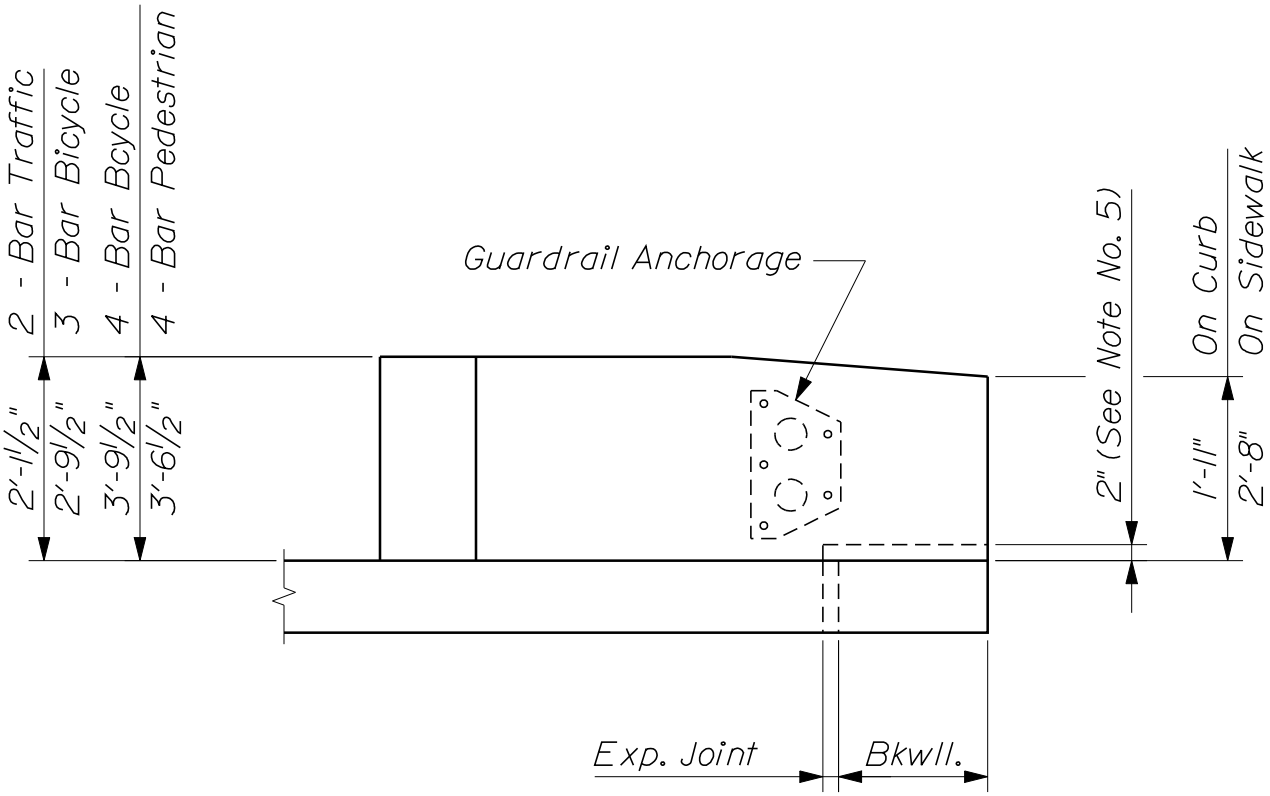

~ TRANSITION BARRIER ELEVATION ~

CONCRETE TRANSITION BARRIER

526(23)

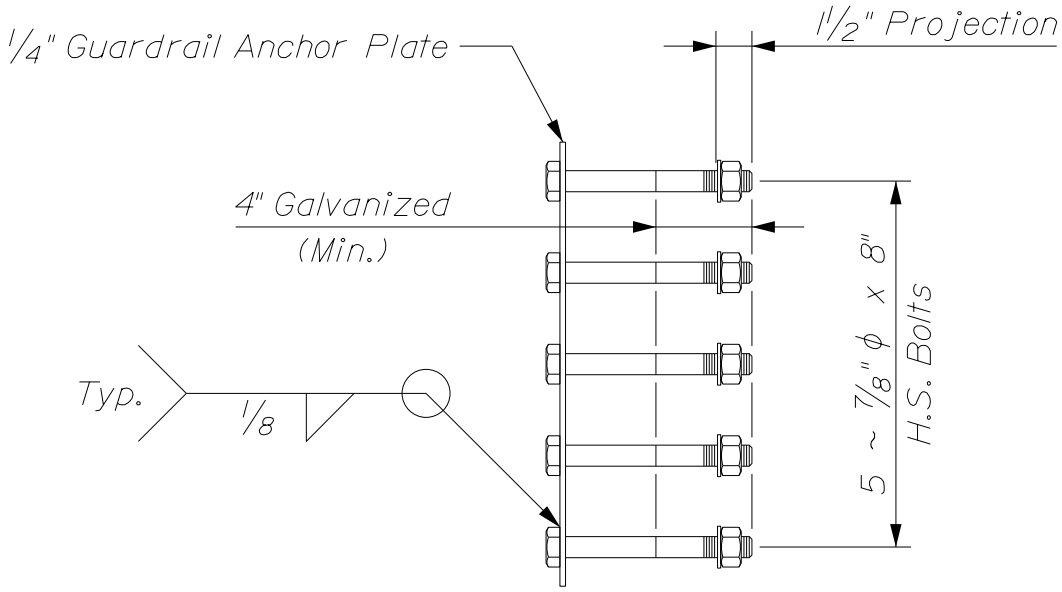

~ GUARDRAIL ANCHORAGE SECTION ~

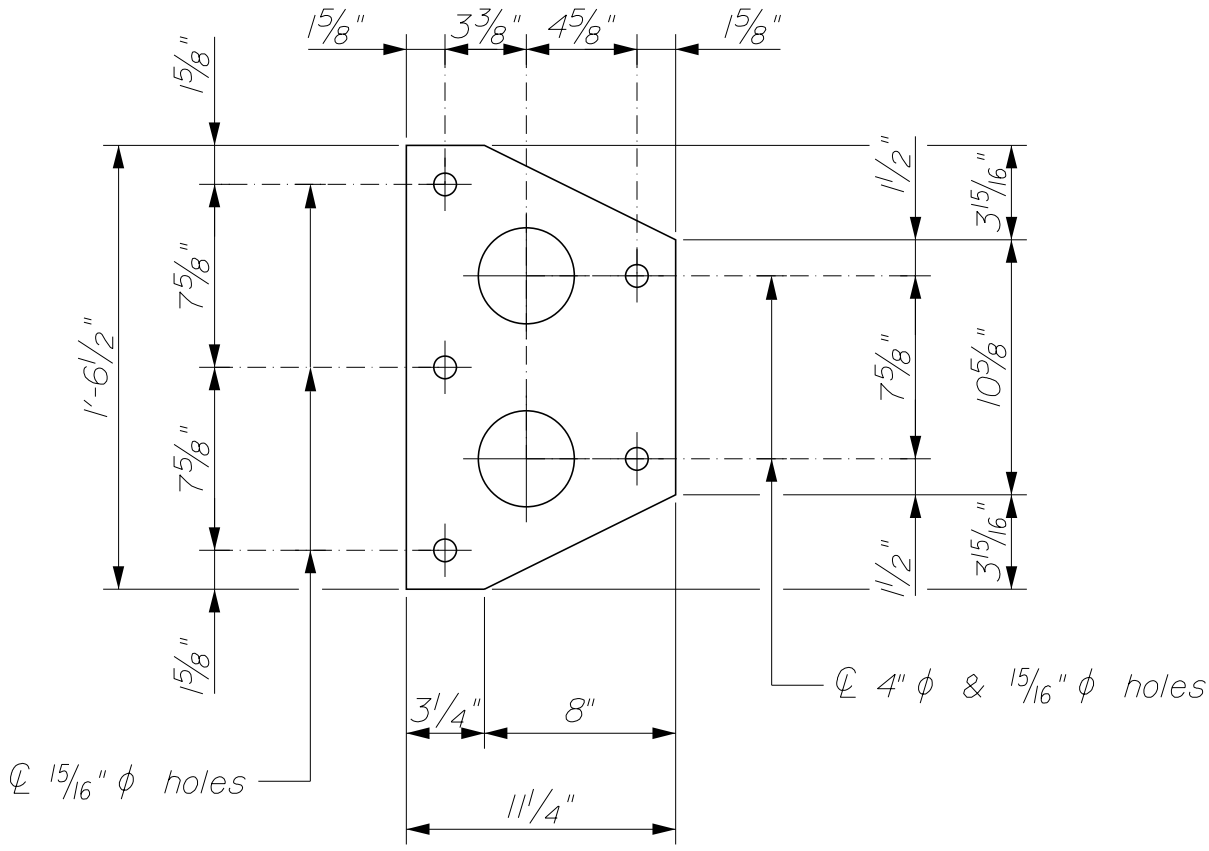

~ GUARDRAIL ANCHOR PLATE ~

CONCRETE TRANSITION BARRIER

526(24)

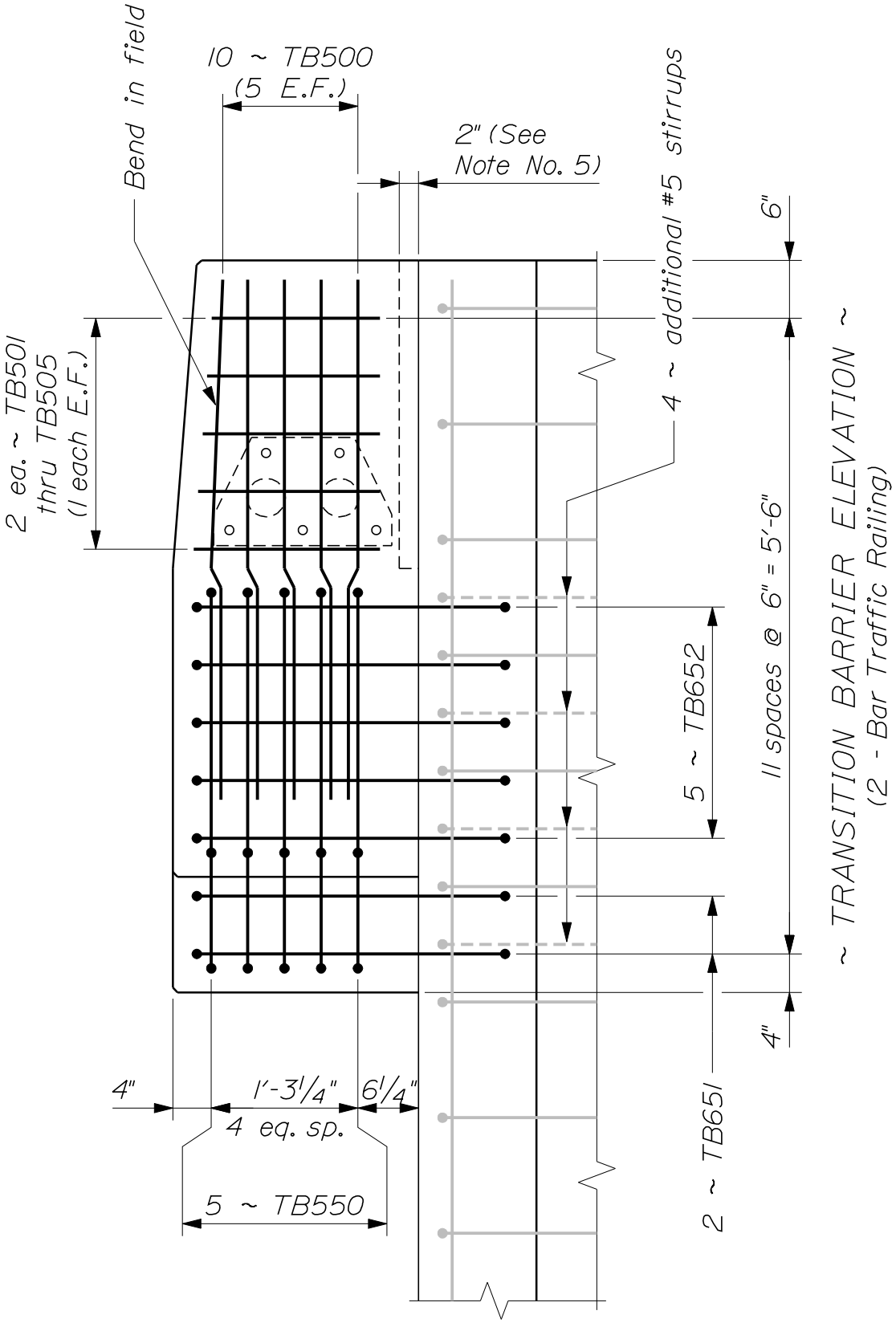

CONCRETE TRANSITION BARRIER

526(25)

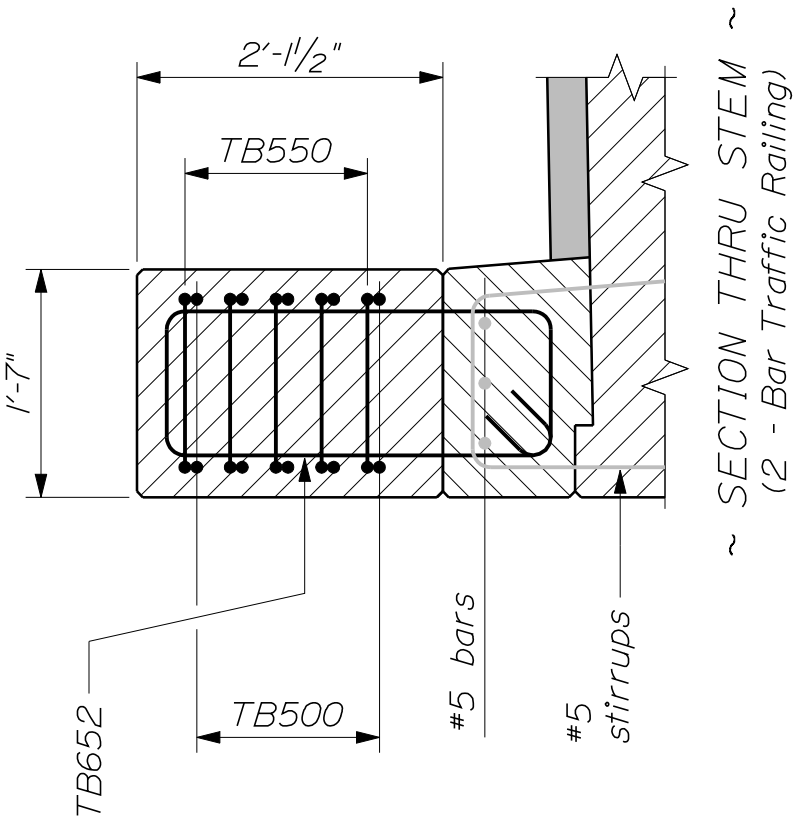

~ SECTION THRU STEM ~
(2 - Bar Traffic Railing)

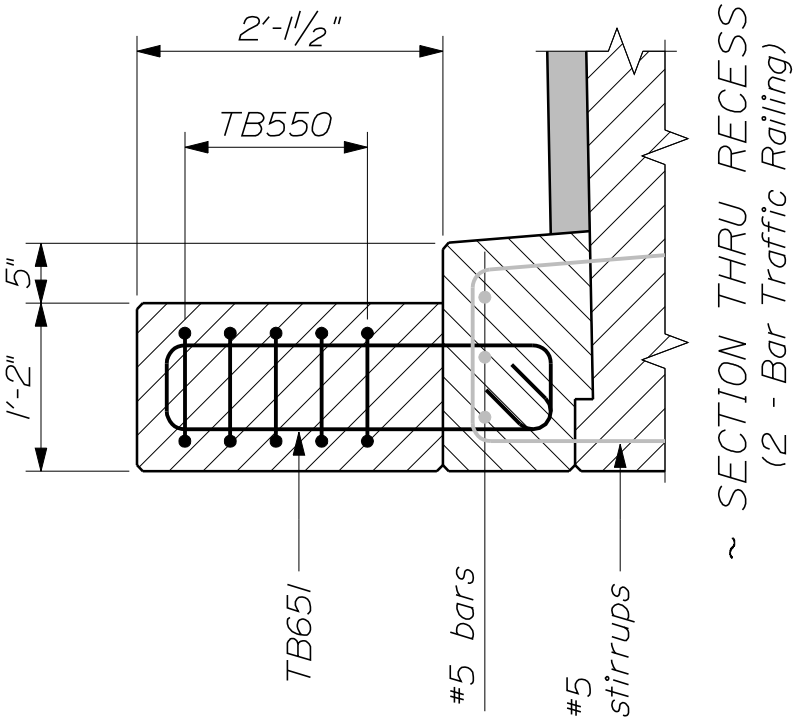

~ SECTION THRU RECESS ~
(2 - Bar Traffic Railing)

CONCRETE TRANSITION BARRIER

526(26)

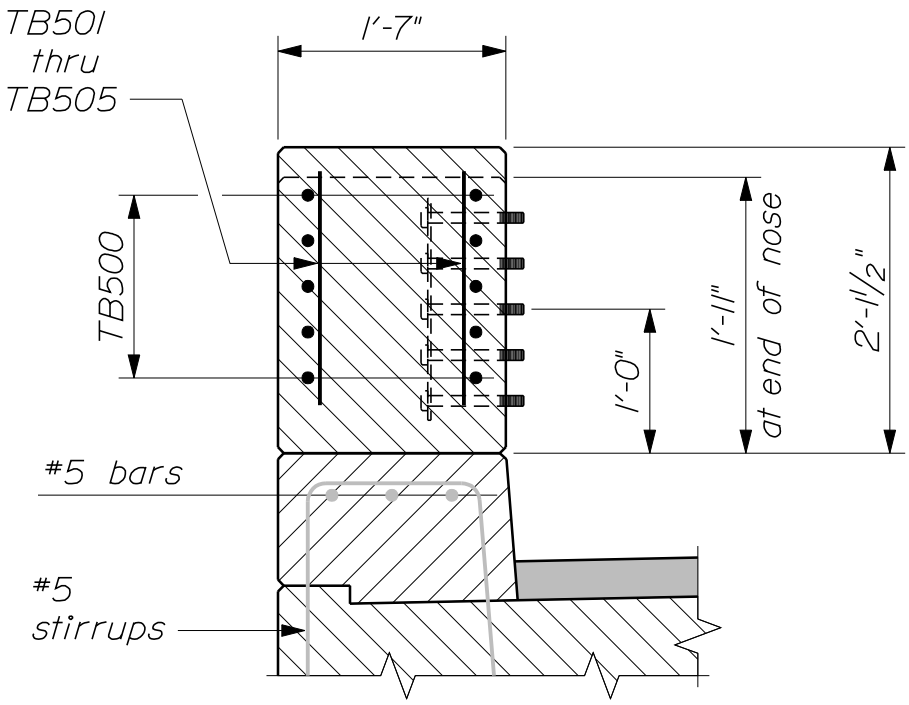

~ SECTION THRU NOSE ~
(2 - Bar Traffic Railing)

CONCRETE TRANSITION BARRIER

526(27)

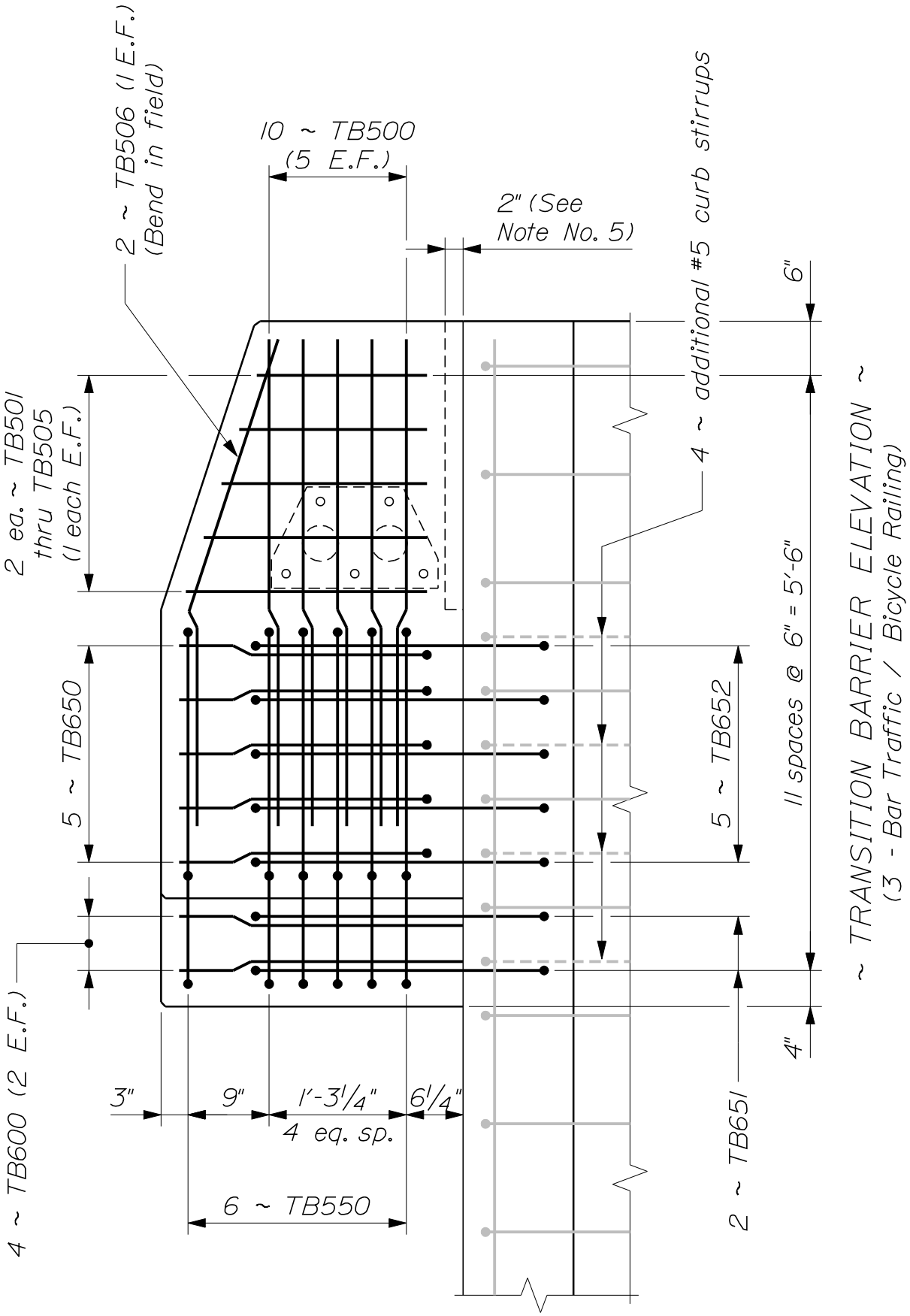

CONCRETE TRANSITION BARRIER

526(28)

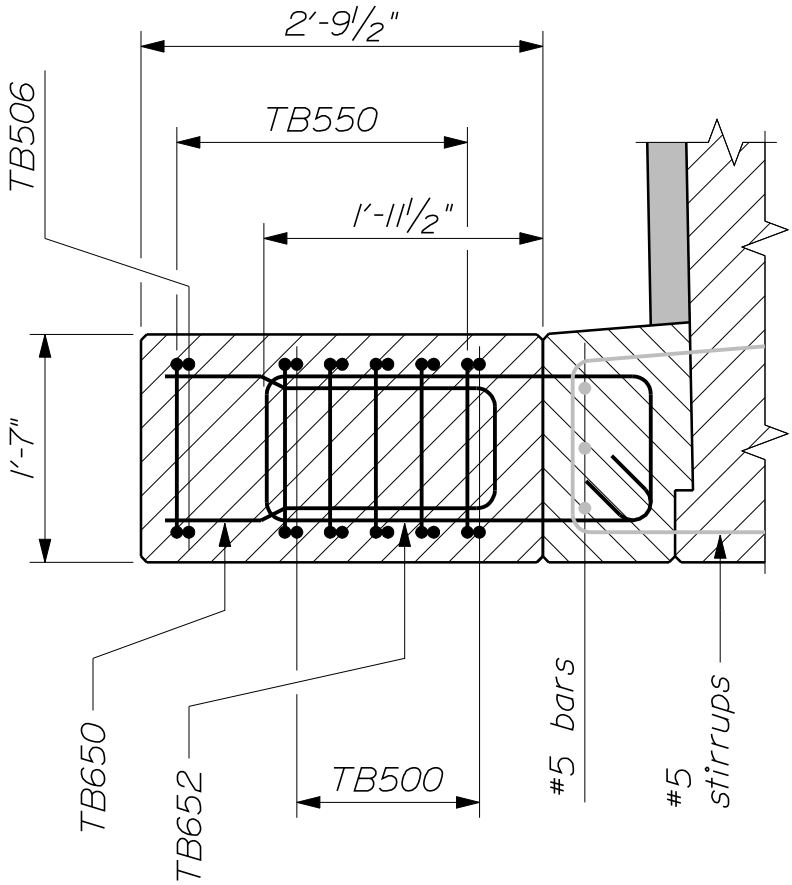

~ SECTION THRU STEM ~
(3 - Bar Traffic / Bicycle Railing)

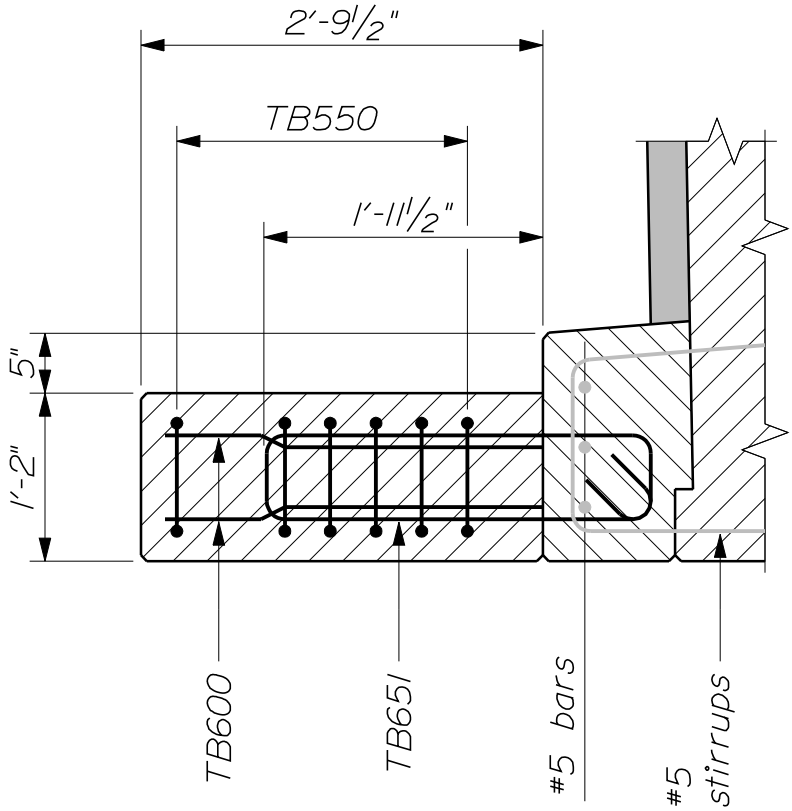

~ SECTION THRU RECESS ~
(3 - Bar Traffic / Bicycle Railing)

CONCRETE TRANSITION BARRIER

526(29)

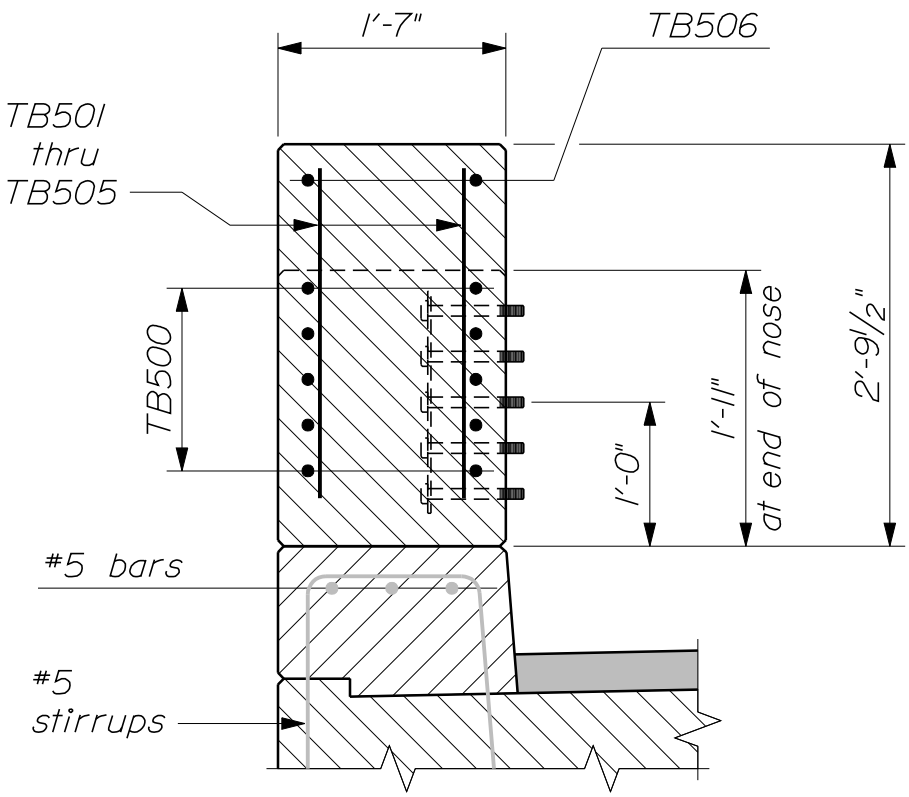

~ SECTION THRU NOSE ~
(3 - Bar Traffic / Bicycle Railing)

CONCRETE TRANSITION BARRIER

526(30)

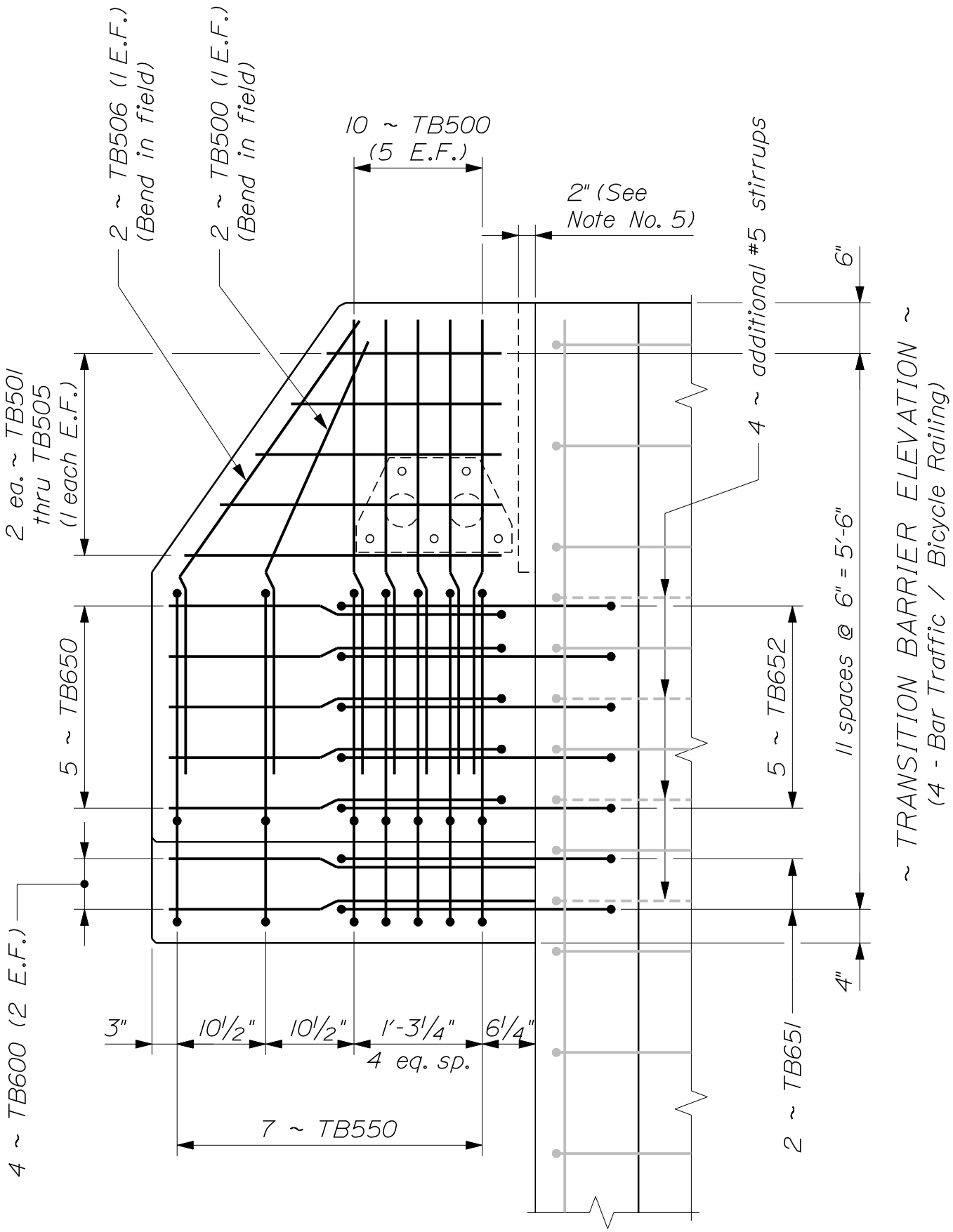

CONCRETE TRANSITION BARRIER

526(31)

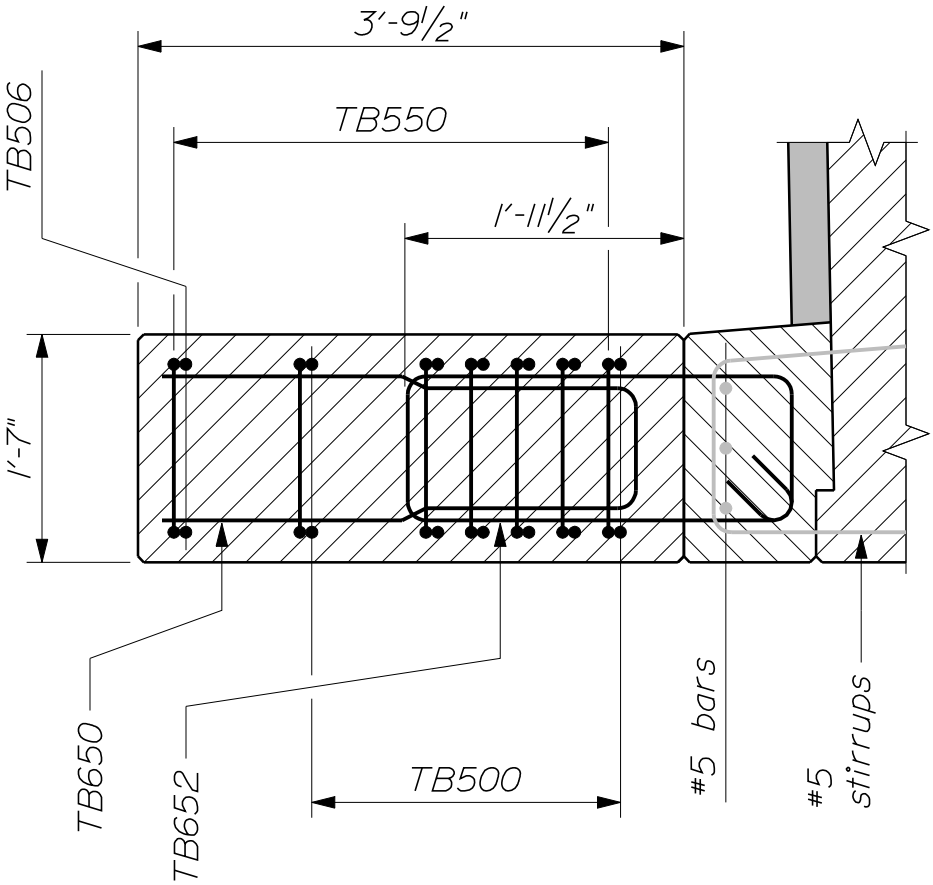

~ SECTION THRU STEM ~
(4 - Bar Traffic / Bicycle Railing)

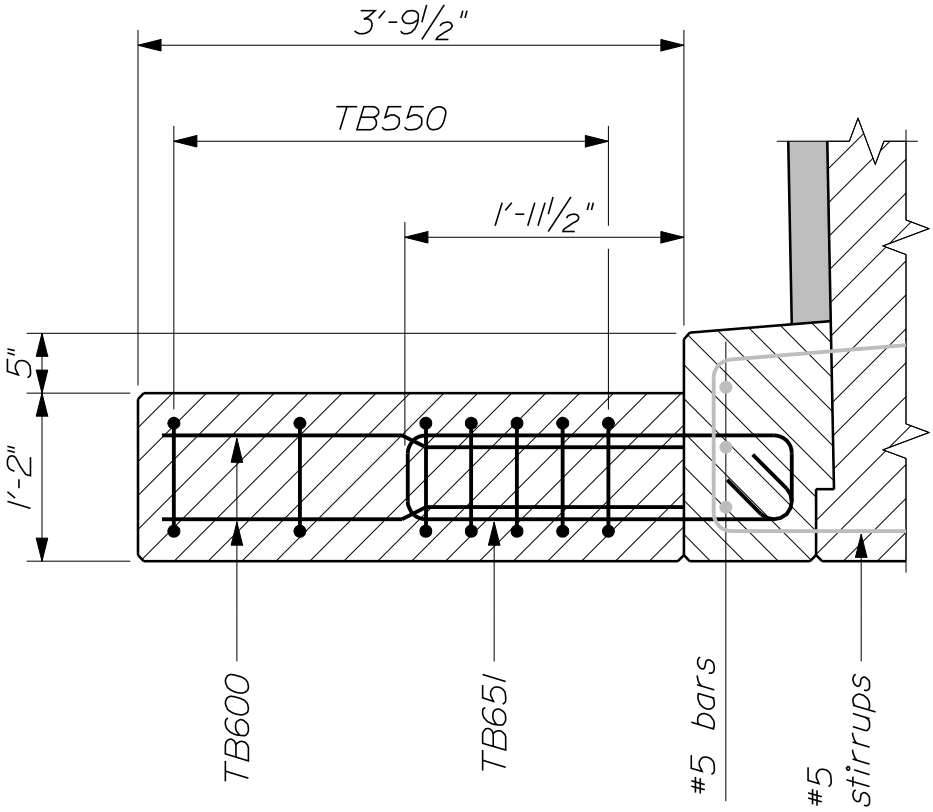

~ SECTION THRU RECESS ~
(4 - Bar Traffic / Bicycle Railing)

CONCRETE TRANSITION BARRIER

526(32)

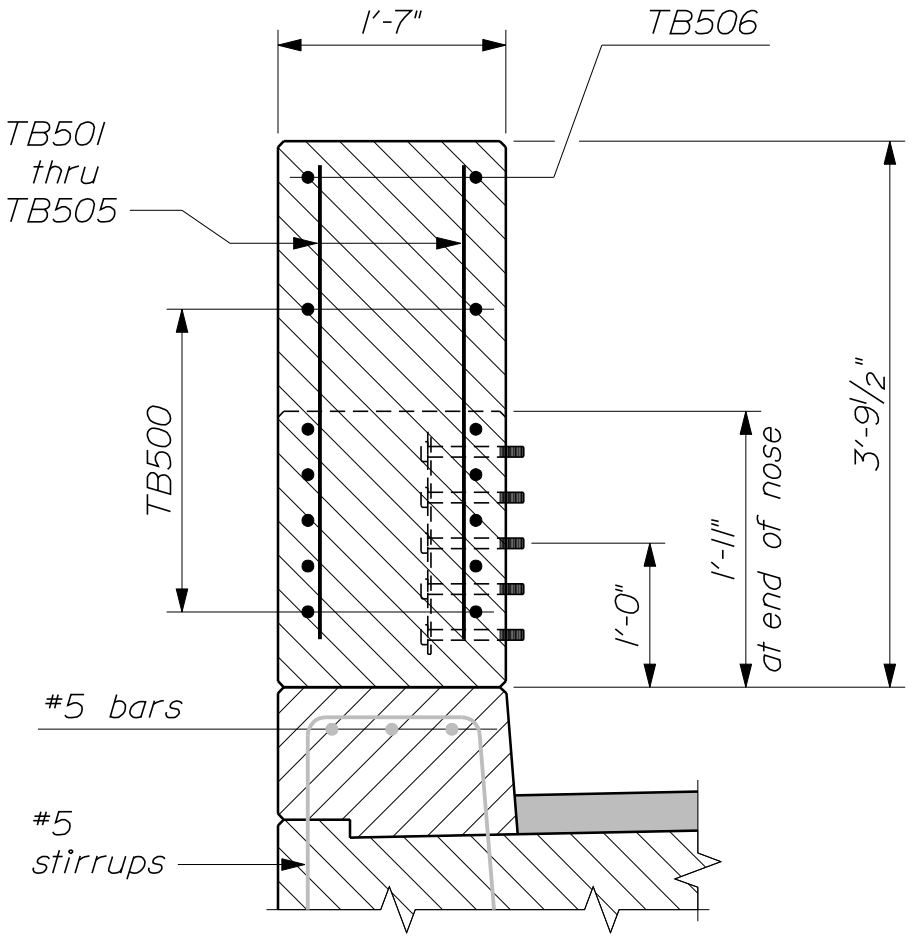

~ SECTION THRU NOSE ~
(4 - Bar Traffic / Bicycle Railing)

CONCRETE TRANSITION BARRIER

526(33)

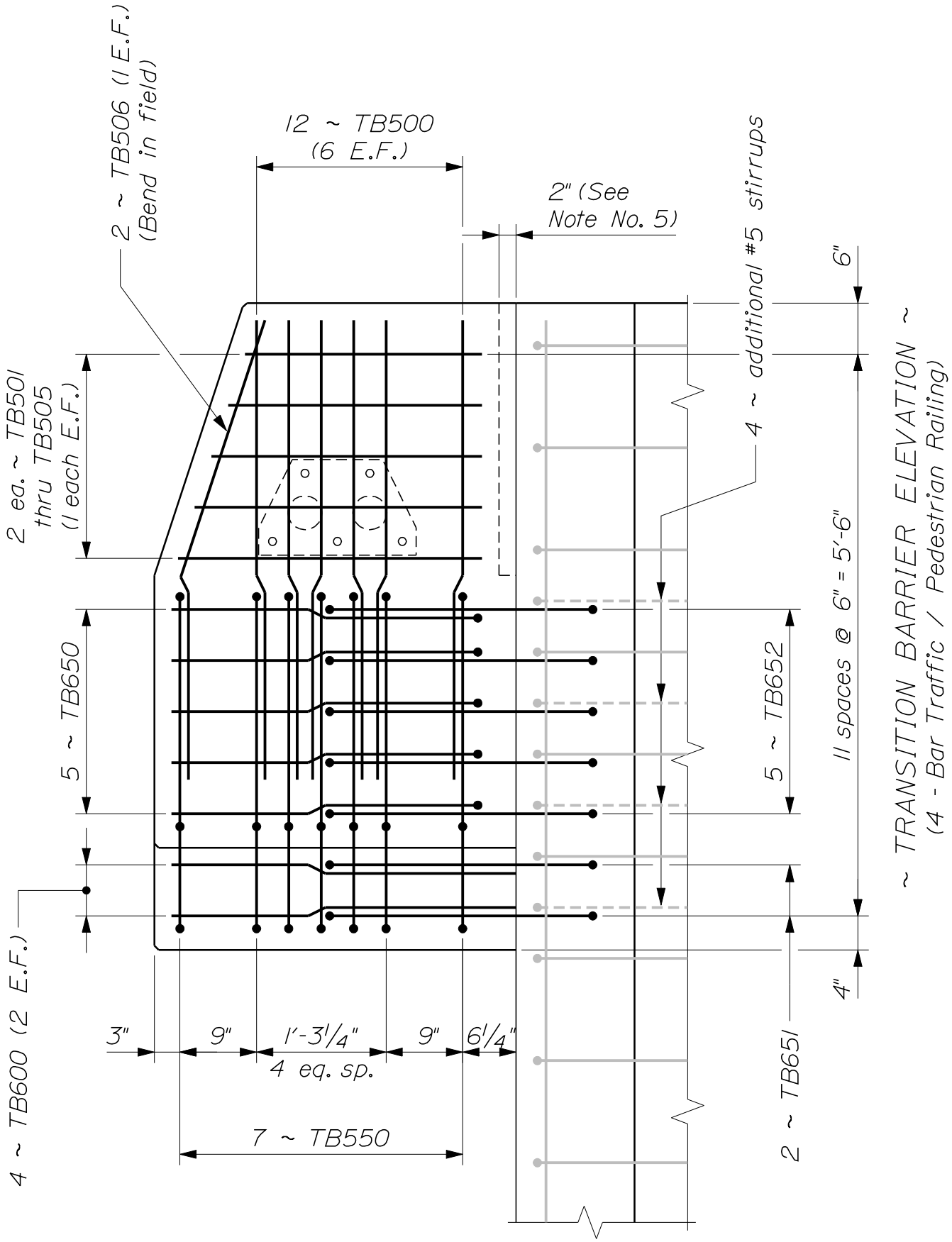

CONCRETE TRANSITION BARRIER

526(34)

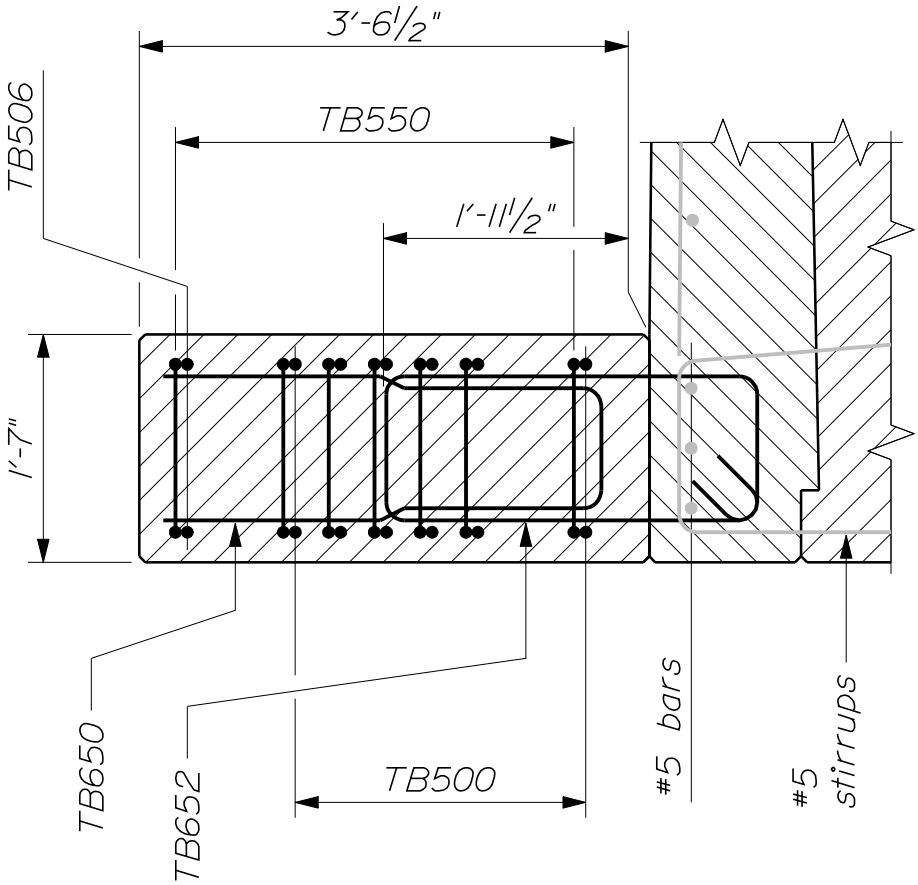

~ SECTION THRU STEM ~
(4 - Bar Traffic / Pedestrian Railing)

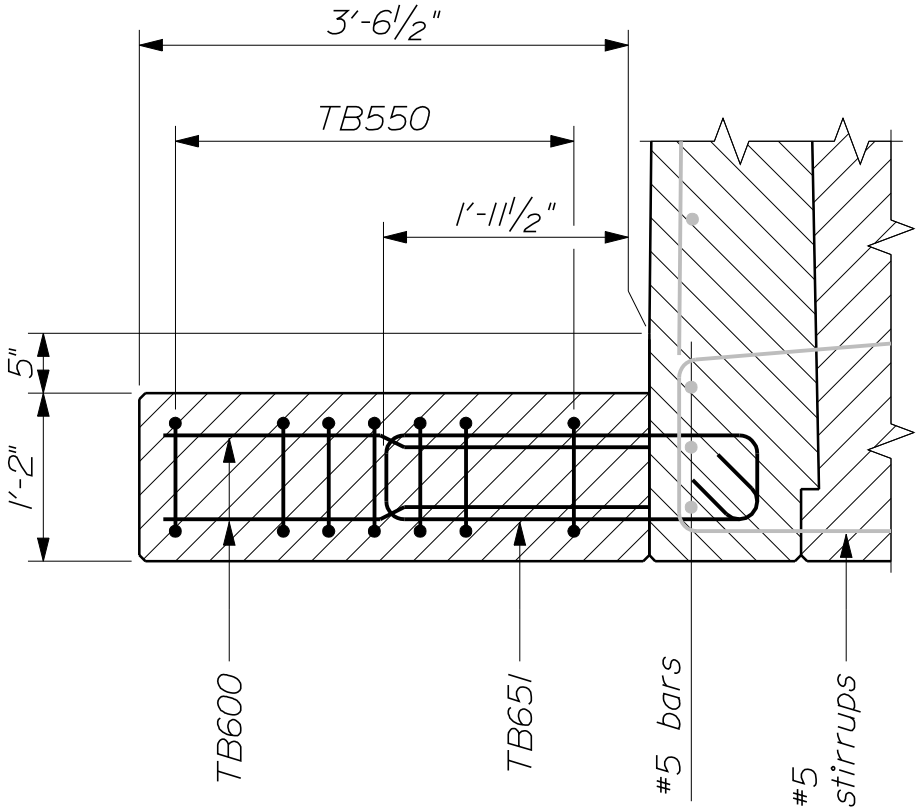

~ SECTION THRU RECESS ~
(4 - Bar Traffic / Pedestrian Railing)

CONCRETE TRANSITION BARRIER

526(35)

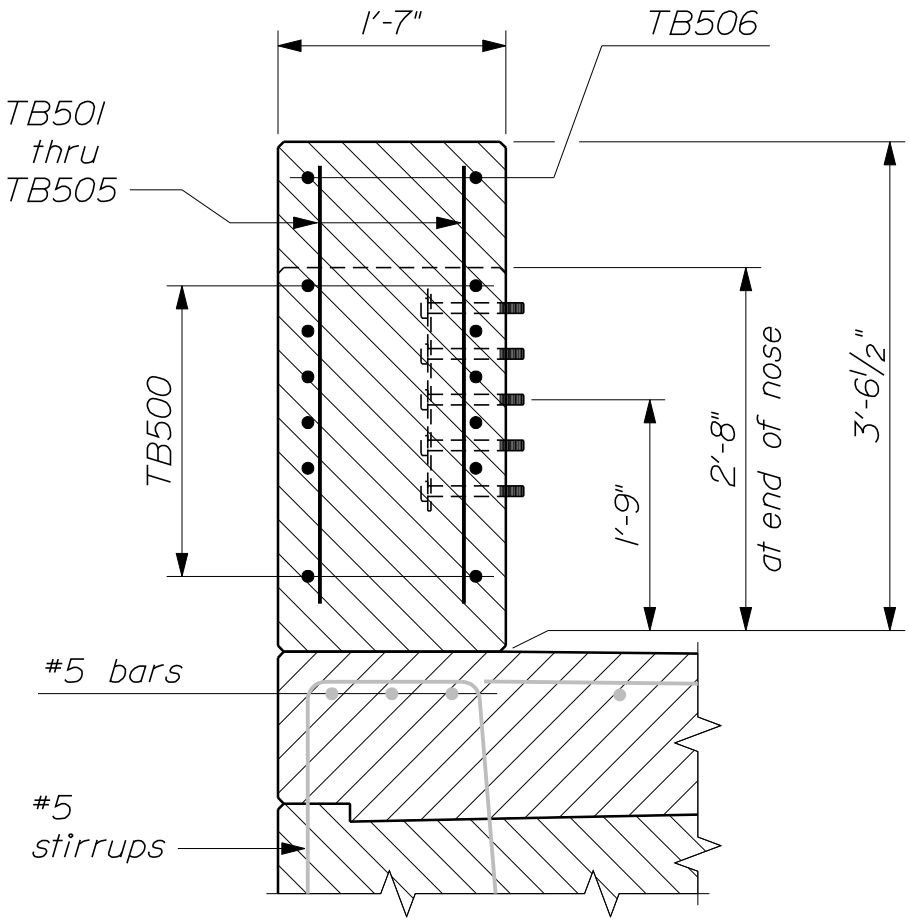

~ SECTION THRU NOSE ~
(4 - Bar Traffic / Pedestrian Railing)

CONCRETE TRANSITION BARRIER

526(36)

REINFORCING STEEL SCHEDULE								
	2 - Bar Traffic		3 - Bar Bike		4 - Bar Bike		4 - Bar Ped.	
	Qty.	Length	Qty.	Length	Qty.	Length	Qty.	Length
TB500	10	4'-6"	10	4'-6"	12	4'-6"	12	4'-6"
TB501	2	1'-8"	2	2'-2"	2	3'-2"	2	2'-11"
TB502	2	1'-7"	2	2'-0"	2	2'-10"	2	2'-9"
TB503	2	1'-7"	2	1'-10"	2	2'-6"	2	2'-7"
TB504	2	1'-6"	2	1'-8"	2	2'-2"	2	2'-5"
TB505	2	1'-6"	2	1'-6"	2	1'-10"	2	2'-3"
TB506	--	--	2	4'-8"	2	5'-1"	2	4'-8"
TB550	5	10'-2"	6	10'-2"	7	10'-2"	7	10'-2"
TB600	--	--	4	2'-7"	4	3'-7"	4	3'-4"
TB650	--	--	5	5'-10"	5	7'-10"	5	7'-4"
TB651-A*	2	7'-11"	2	7'-11"	2	7'-11"	2	7'-11"
TB651-C*	2	7'-5"	2	7'-5"	2	7'-5"	2	7'-5"
TB652-A*	5	8'-9"	5	8'-9"	5	8'-9"	5	8'-9"
TB652-C*	5	8'-3"	5	8'-3"	5	8'-3"	5	8'-3"

Notes:
The first digit following the letters of the mark indicate the size of the reinforcing bar. (TB500 = bar size #5.)
All dimensions are out - to - out of bar.

Quantities given are for one Transition Barrier.

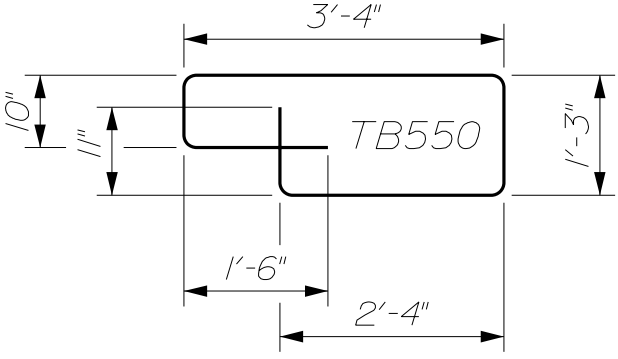

*TB65x-A is used with Asphalt Wearing Surface.
*TB65x-C with Integral Concrete Wearing Surface.

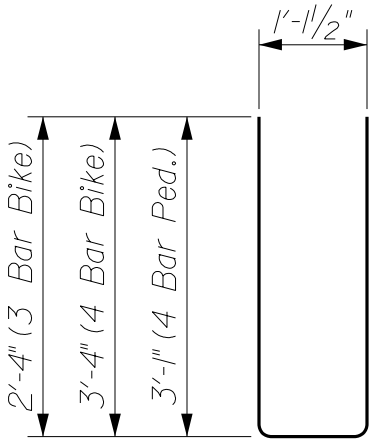

TB650

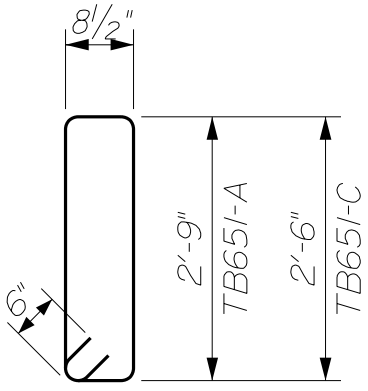

TB651

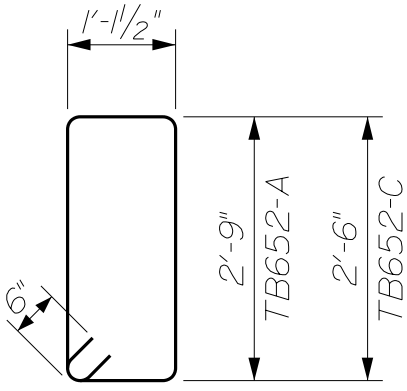

TB652

CONCRETE TRANSITION BARRIER

526(37)

NOTES:

1. All work and materials shall conform to the provisions of Standard Specifications Section 526 - Concrete Barrier.

2. The Contractor is responsible for ensuring that vertical reinforcing bars TB651 and TB652 are installed prior to placement of the curb or sidewalk concrete. Payment for these bars will be considered incicdental to Item No. 526.34, Permanent Concrete Transition Barrier.

3. Reinforcing steel shall have a minimum concrete cover of 2 inches.

4. Quantities of reinforcing bars shown are for one transition barrier only.

5. When the Concrete Transition Barrier is cantilevered over an expansion joint, the nose shall be blocked out as shown.

6. Payment for guardrail anchorage will be considered incidental to the transition barrier pay item.

7. Precast Concrete Transition Curb shall meet the requirements of Standard Specifications Section 609 - Curb. The bridge end of the curb shall be saw cut in the field to fit flush against the backwall, as dictated by the bridge skew angle and the profile grade. Where curbing is specified on the adjacent highway, the transition shall be modified accordingly. Payment for transition curb will be considered incidental to the Concrete Transition Barrier pay item.

8. Concrete Transition Barrier is designed for attachment of Bridge Transition Type "1" unless otherwise indicated on the Design Drawings. Refer to Section 606 for details.

9. After installation of the guardrail is complete, upset the threads on the anchor bolts in three (3) places around each bolt, at the junction of the nut and the exposed thread, with a center punch or similar tool.

10. If there is a conflict between these Standard Details and the Design Drawings, the requirements of the Design Drawings shall be followed.

MATERIALS:

Concrete	Class "LP"
Reinforcing Steel	AASHTO M 31M/M 31, Grade 60
Spacer Plate	AASHTO M 270M/M 270, Grade 36 (Galvanized)
Bolts	AASHTO M 314, Grade 105 (Galvanized)

CONCRETE TRANSITION BARRIER

526(38)

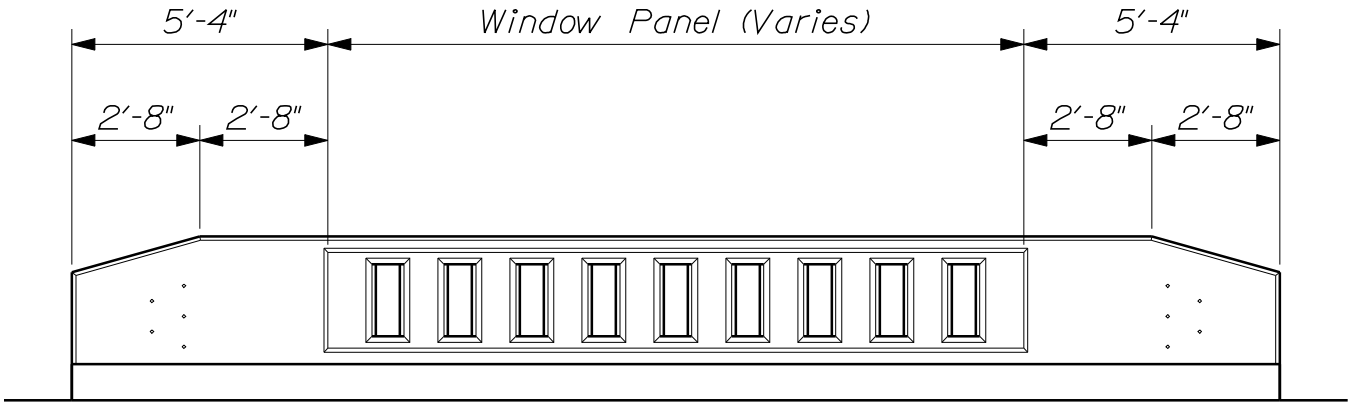

~ RAIL ELEVATION ~
(Traffic Rail shown; Sidewalk Rail similar)

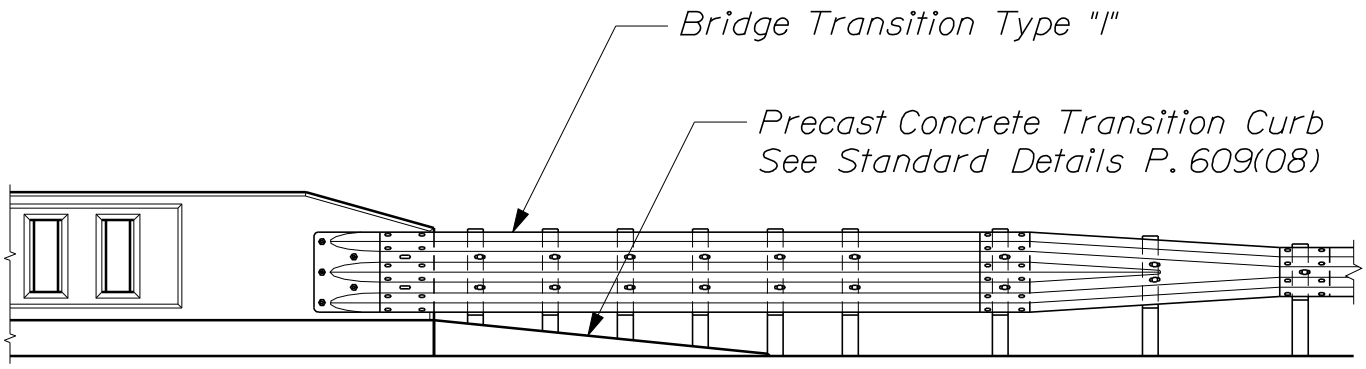

~ GUARDRAIL CONNECTION ~
(Traffic Rail)

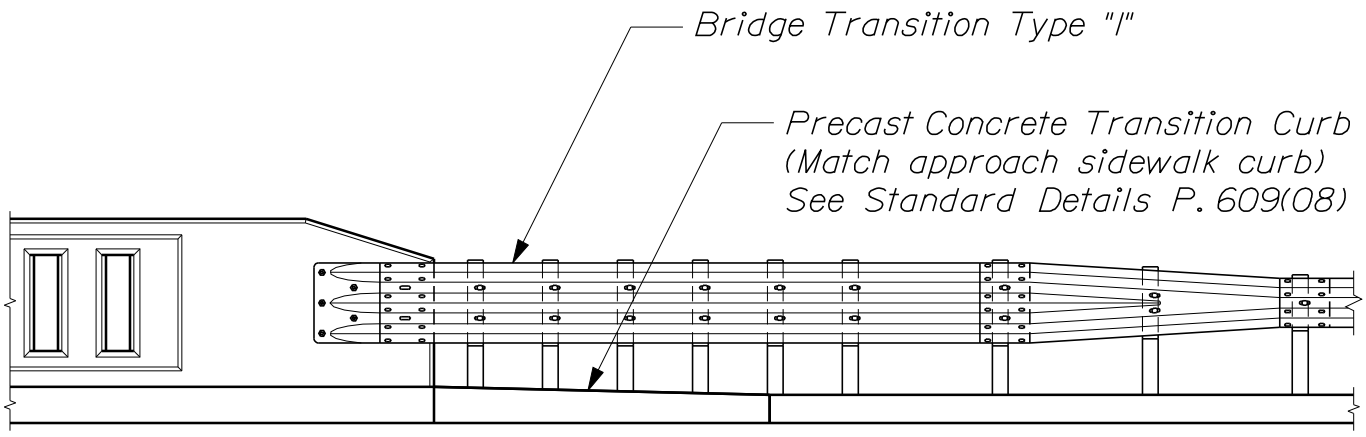

~ GUARDRAIL CONNECTION ~
(Sidewalk Rail)

TEXAS CLASSIC RAIL

526(39)

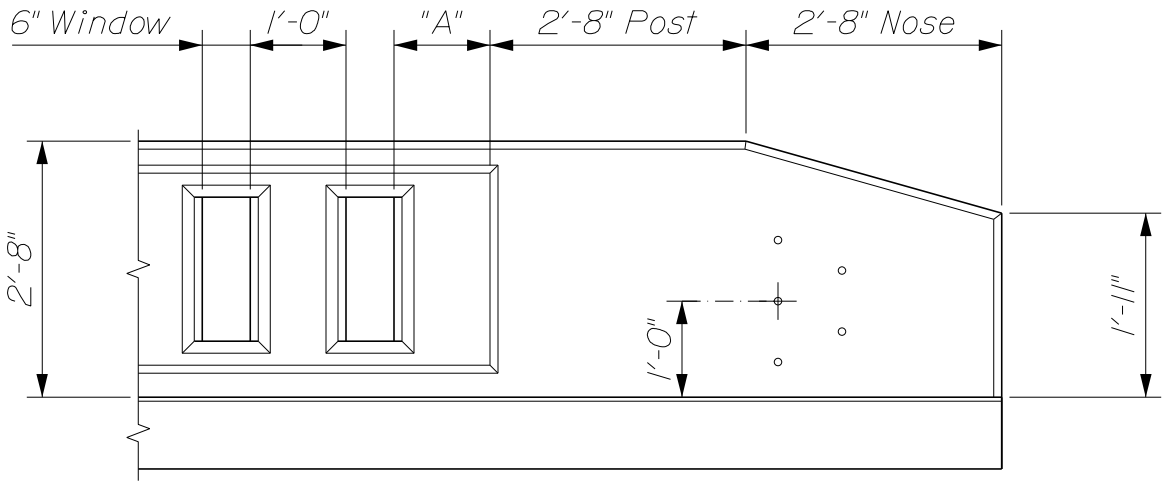

~ TRAFFIC RAIL END ELEVATION ~
(Non - cantilevered)

Dim. "A" shall be 6" min., 15" max. and approximately equal at all locations in any length of railing.

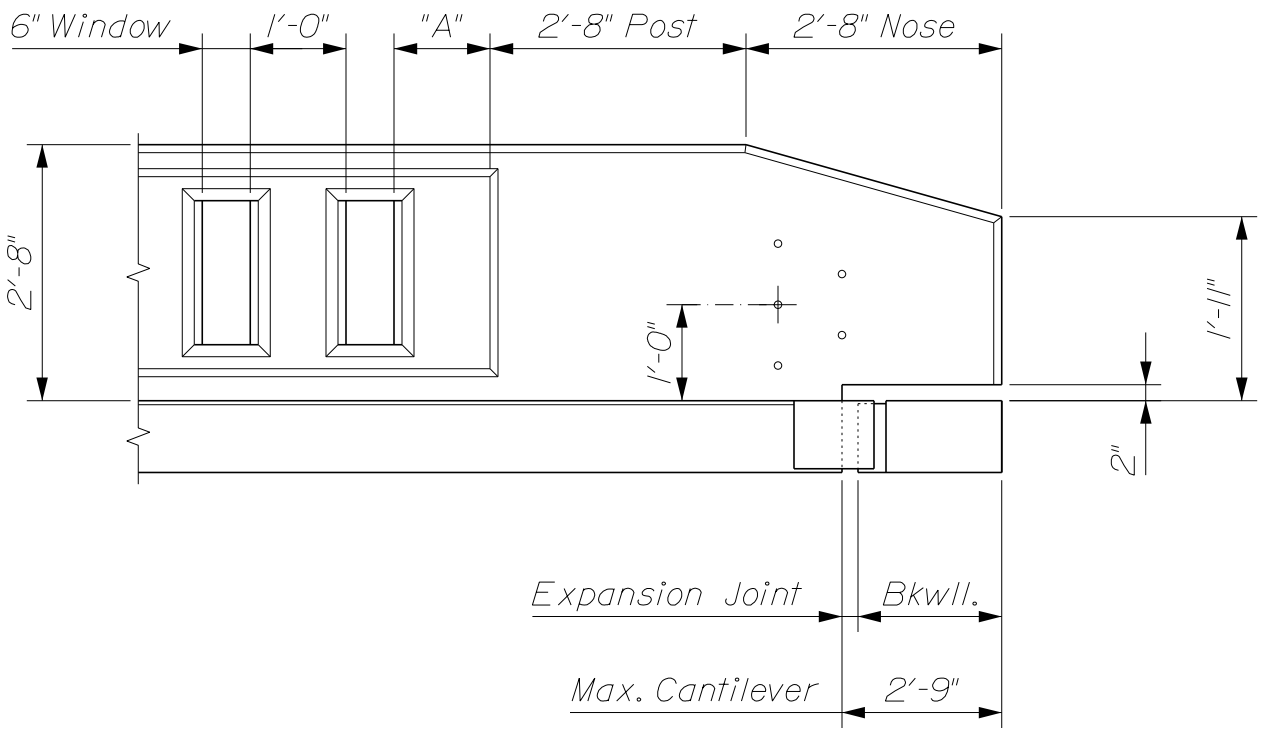

~ TRAFFIC RAIL END ELEVATION ~
(Cantilevered)

TEXAS CLASSIC RAIL

526(40)

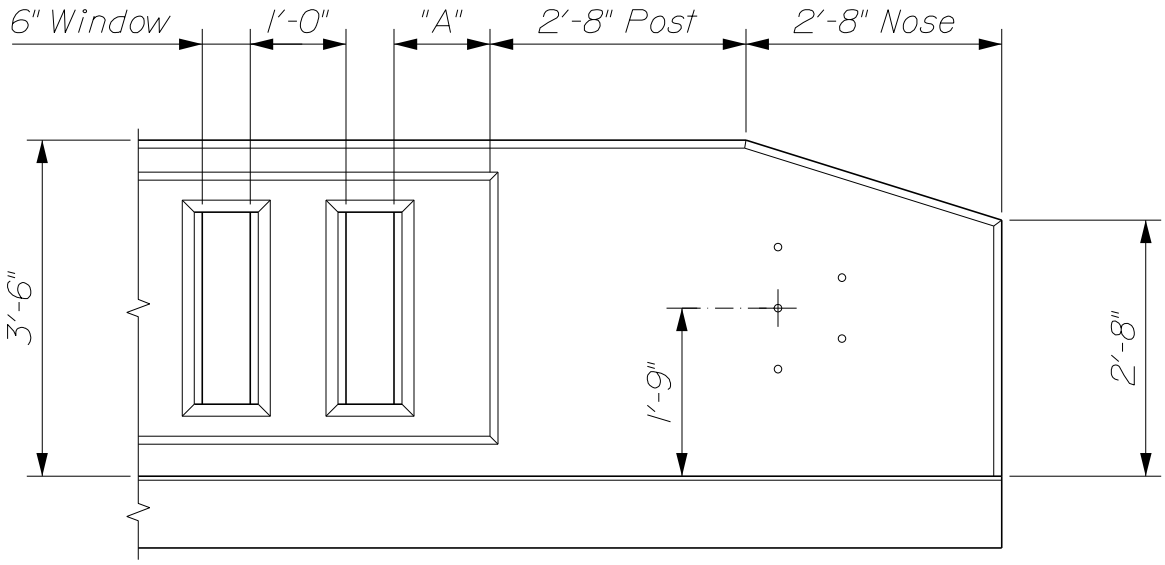

~ SIDEWALK RAIL END ELEVATION ~
(Non - cantilevered)

Dim. "A" shall be 6" min., 15" max. and approximately equal at all locations in any length of railing.

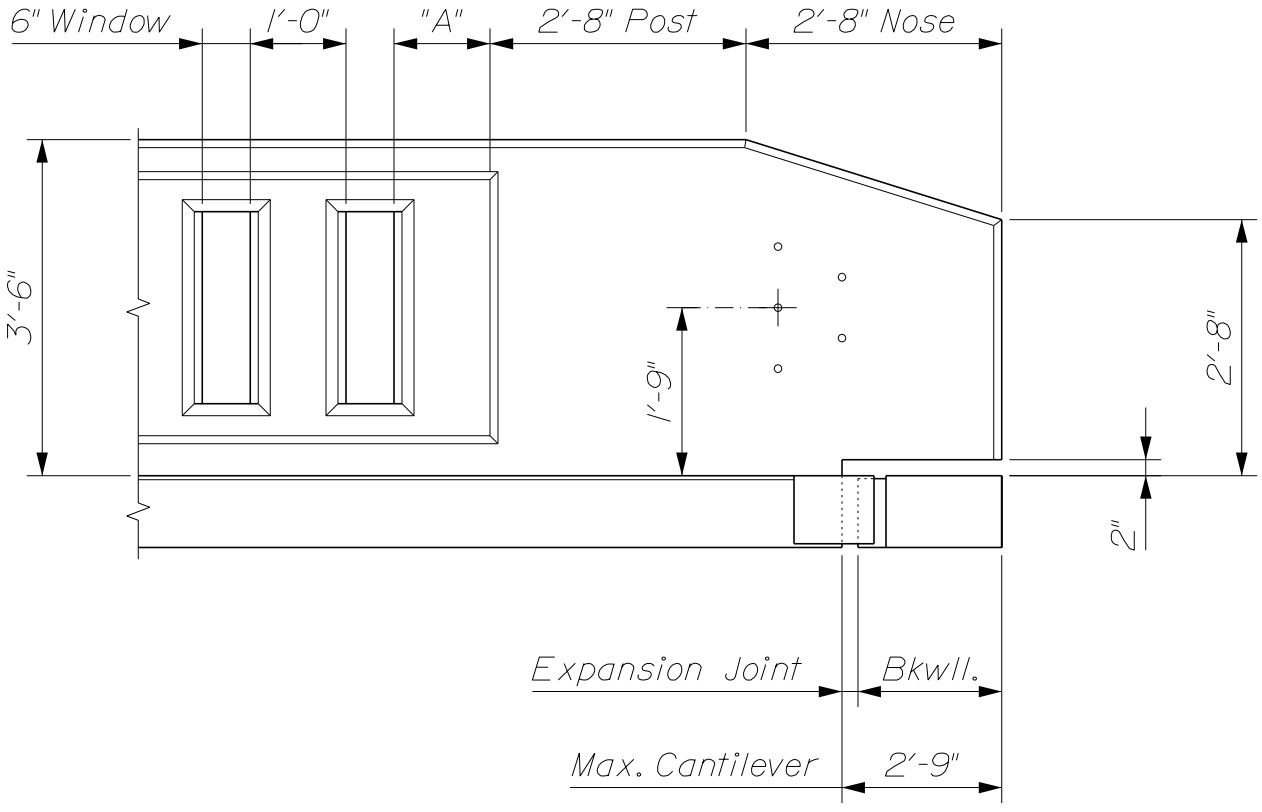

~ SIDEWALK RAIL END ELEVATION ~
(Cantilevered)

TEXAS CLASSIC RAIL

526(41)

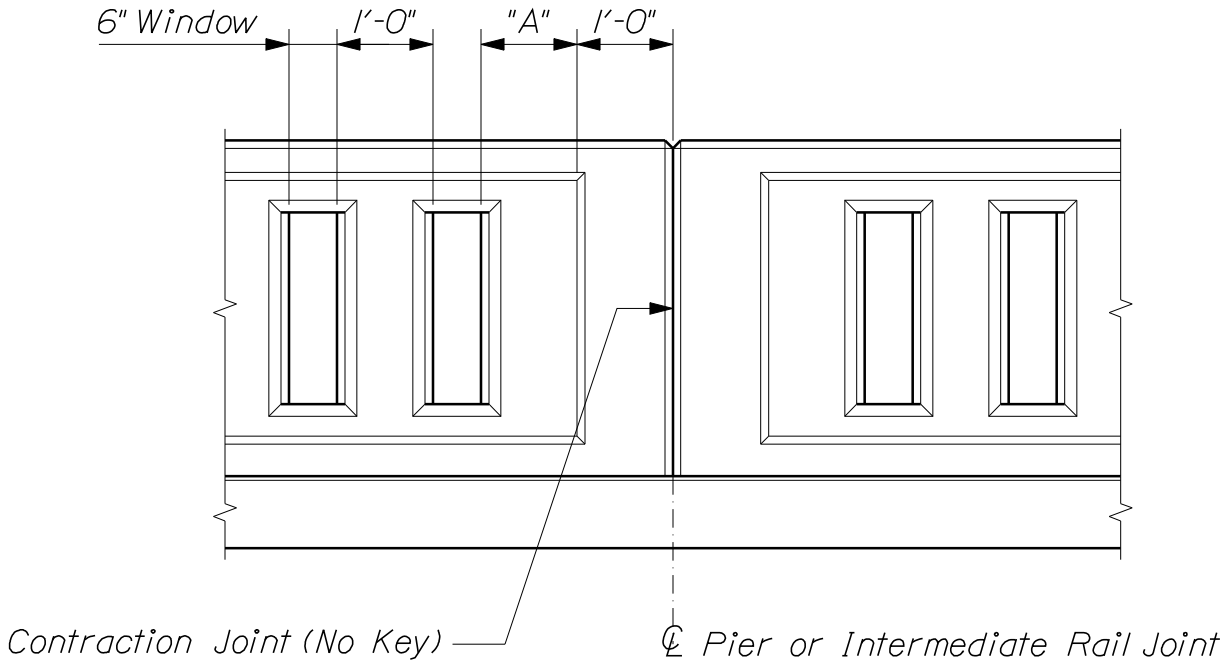

~ CONTRACTION JOINT ELEVATION ~
(Sidewalk Rail shown)

Dim. "A" = 6" min., 15" max.

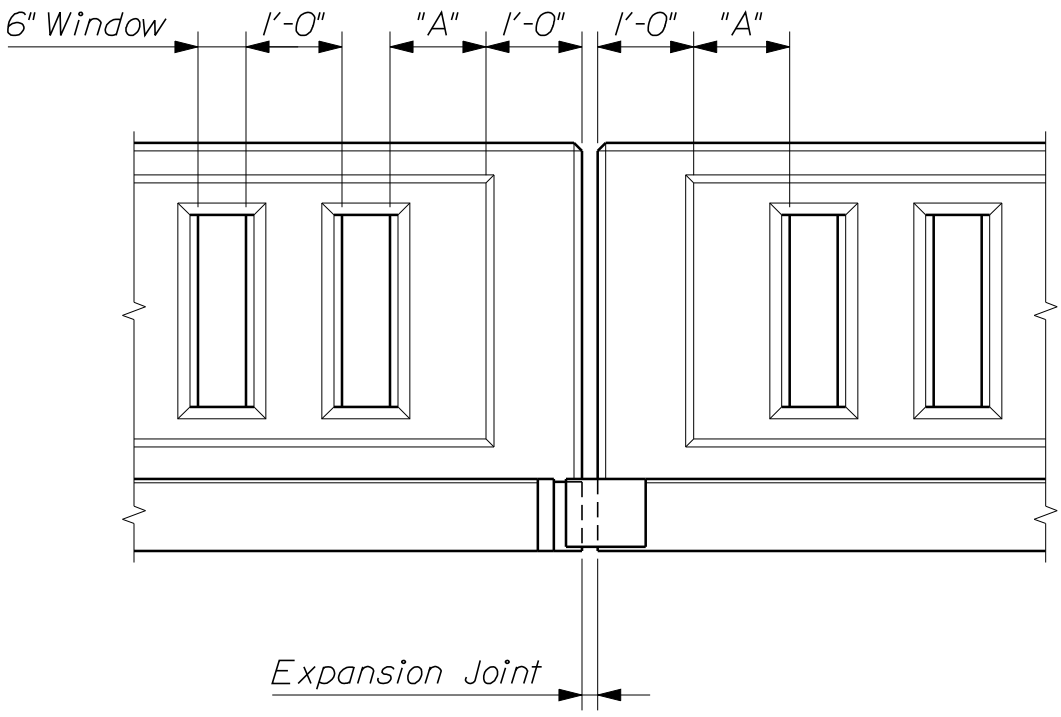

~ EXPANSION JOINT ELEVATION ~
(Sidewalk Rail shown)

TEXAS CLASSIC RAIL

526(42)

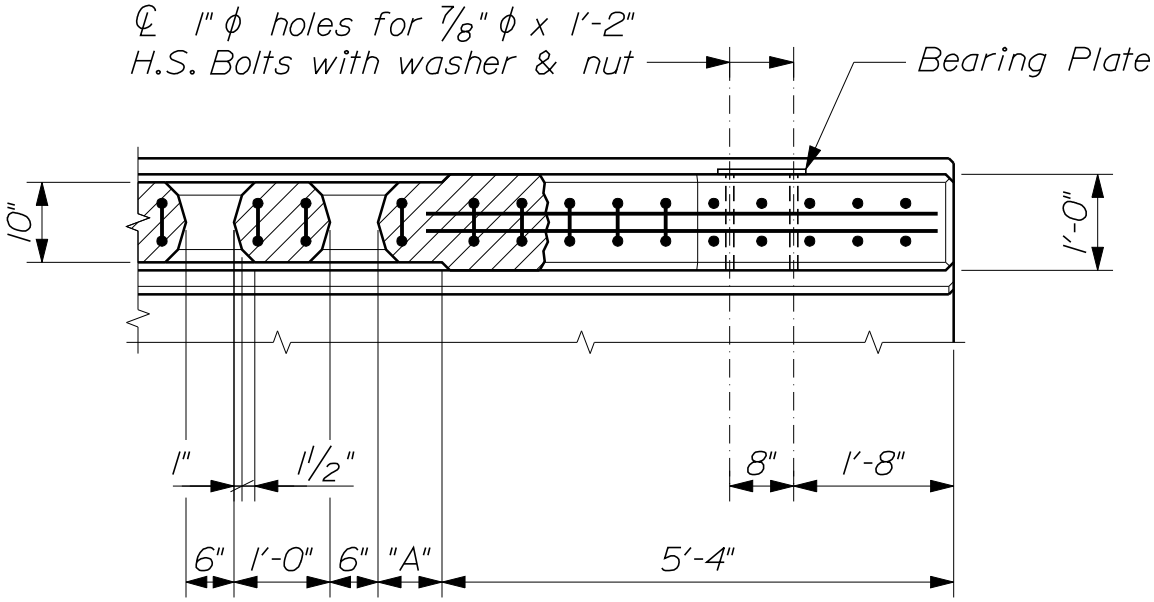

~ TRAFFIC RAIL PLAN ~

E.F. = Each Face

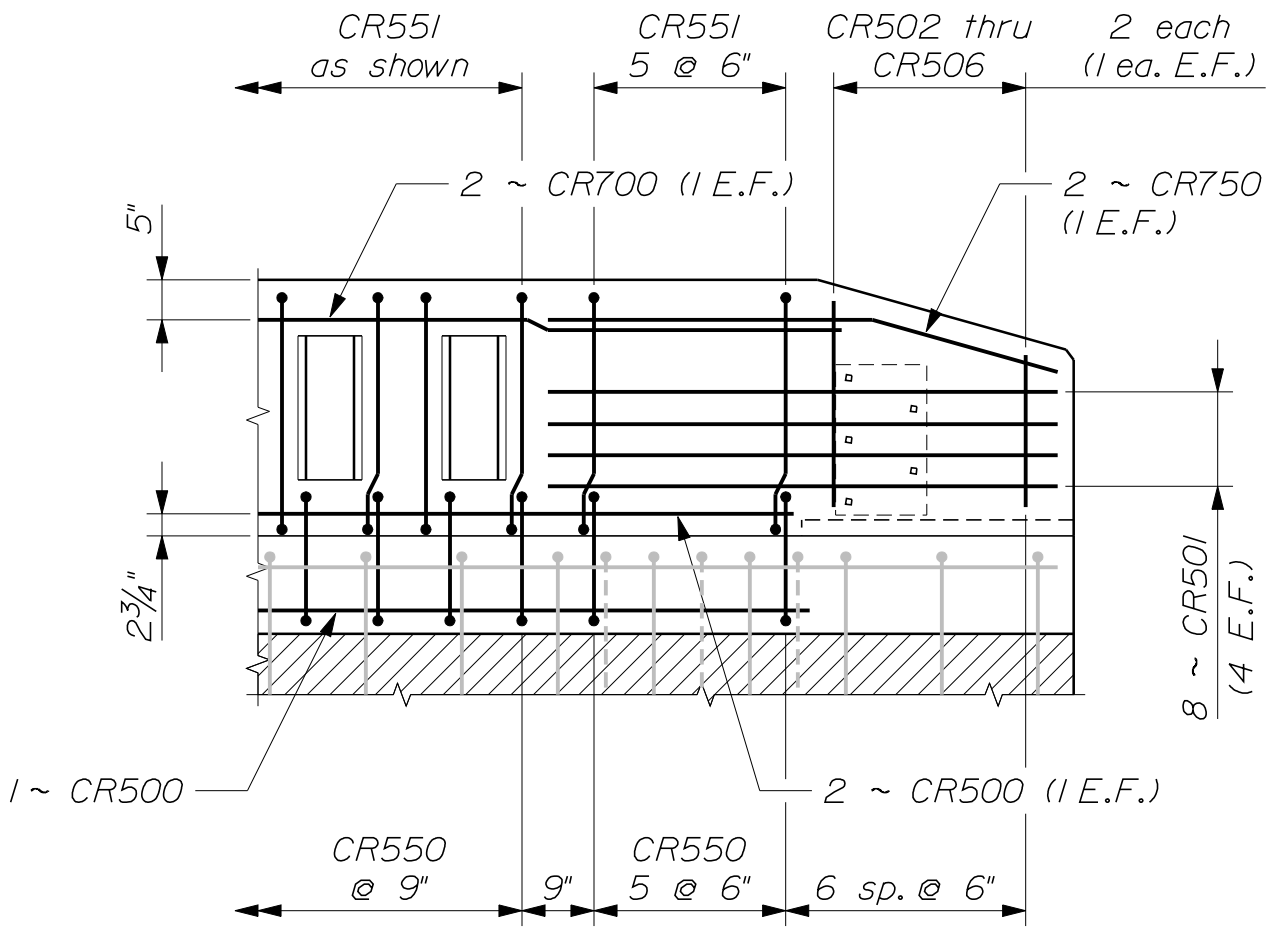

~ TRAFFIC RAIL ELEVATION ~

TEXAS CLASSIC RAIL

526(43)

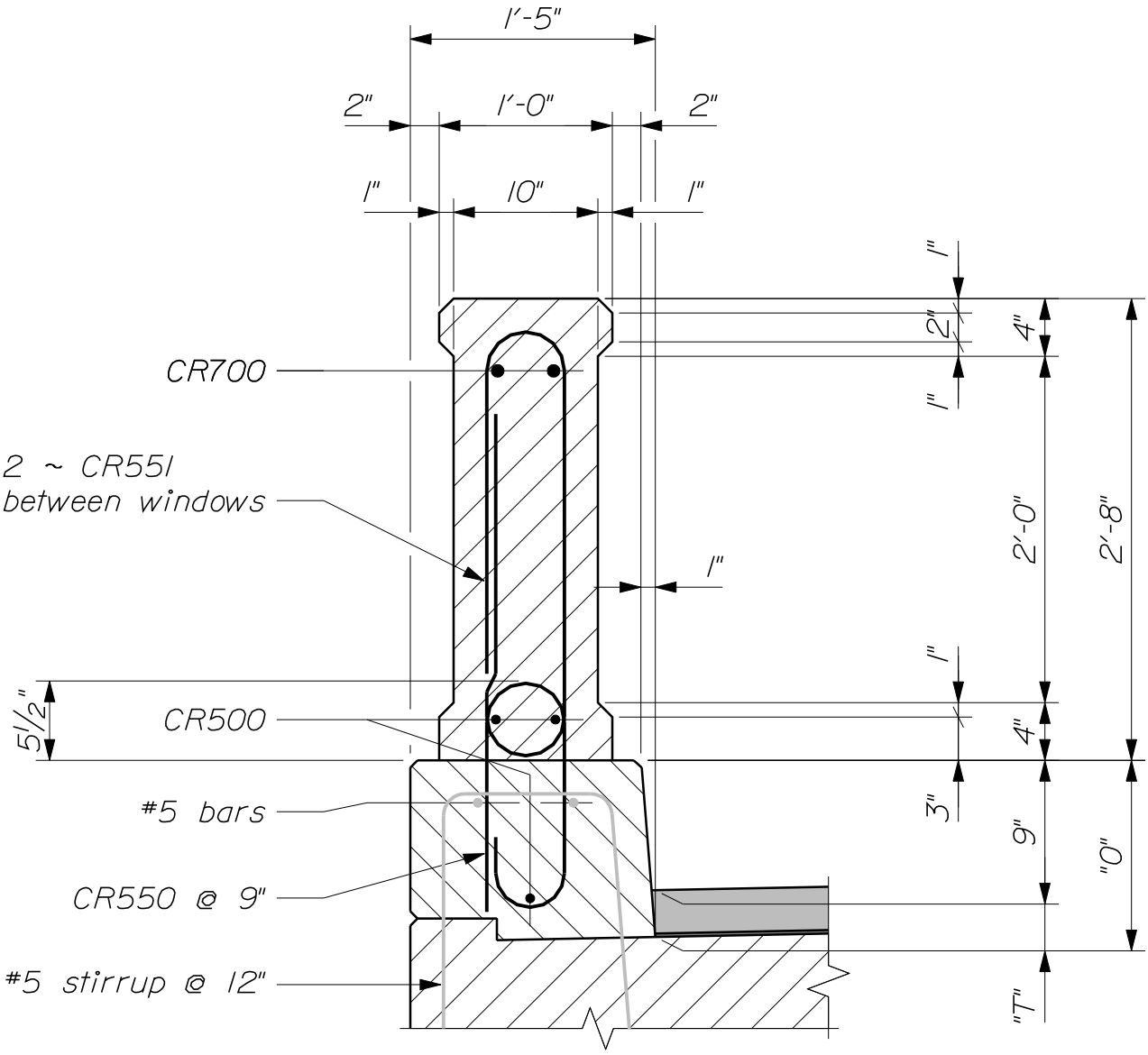

~ SECTION BETWEEN WINDOWS ~

(Traffic Rail)

For Wearing Surface ("T") details, refer to Section 502 - Concrete Curb

TABLE OF DIMENSIONS 1		
Wearing Surface Type	"T"	"O"
Bituminous	3 1/4"	1'-0 1/4"
Unreinforced Concrete	2"	11"
Integral	0"	9"

TEXAS CLASSIC RAIL

526(44)

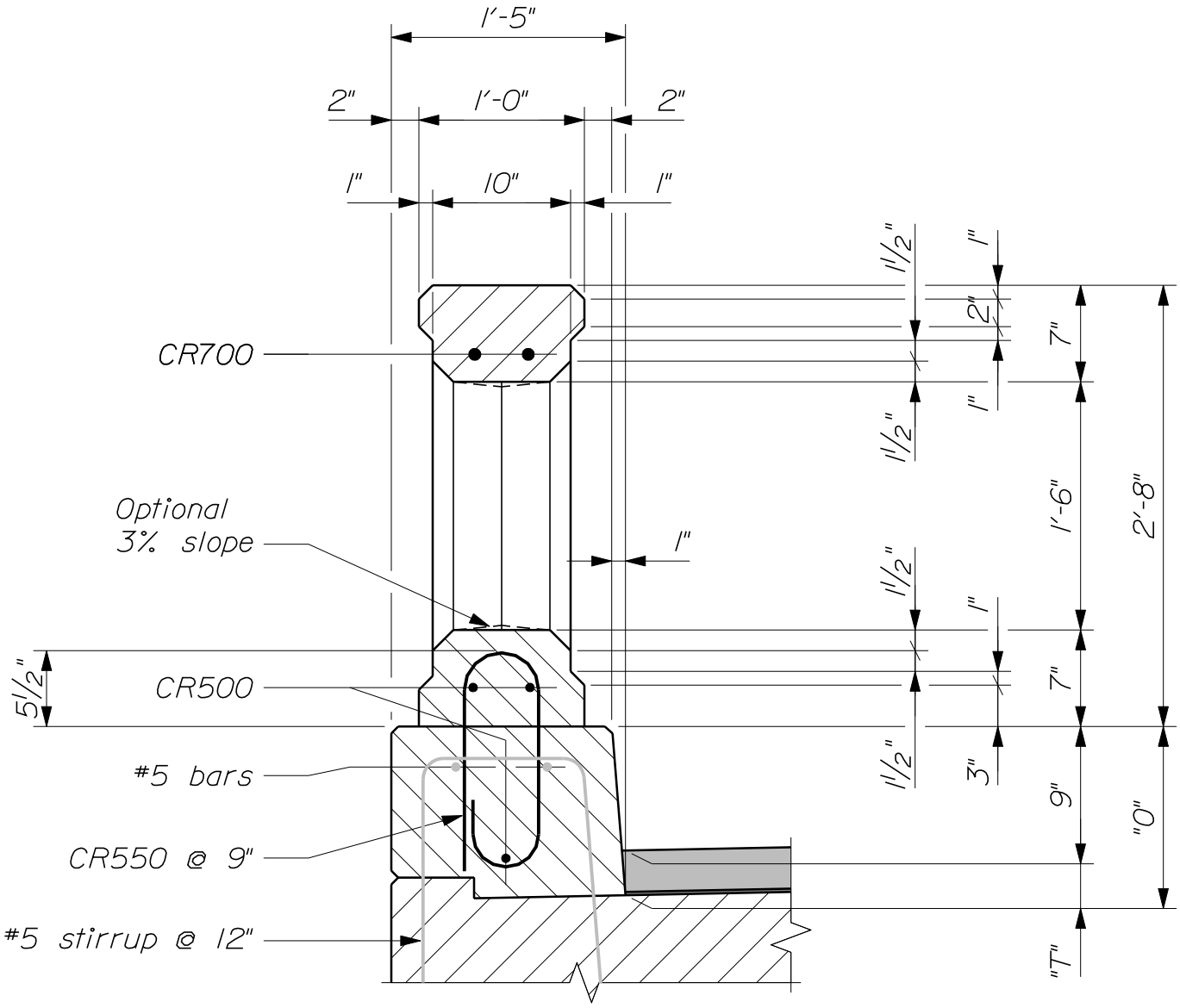

~ SECTION THROUGH WINDOW ~

(Traffic Rail)

For Wearing Surface ("T") details, refer to Section 502 - Concrete Curb

TEXAS CLASSIC RAIL

526(45)

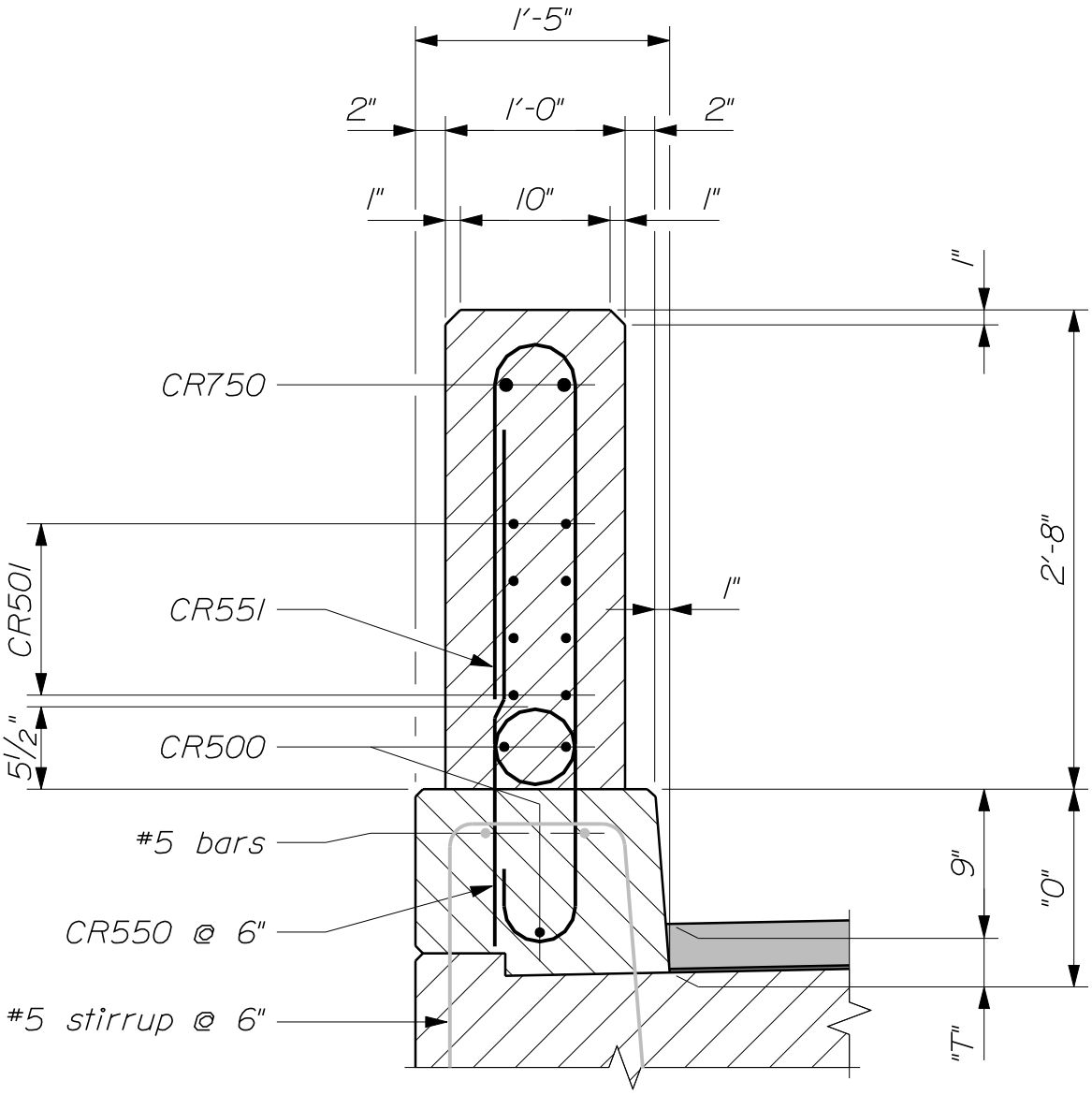

~ SECTION THROUGH POST ~

(Traffic Rail)

For Wearing Surface ("T") details, refer to Section 502 - Concrete Curb

TEXAS CLASSIC RAIL

526(46)

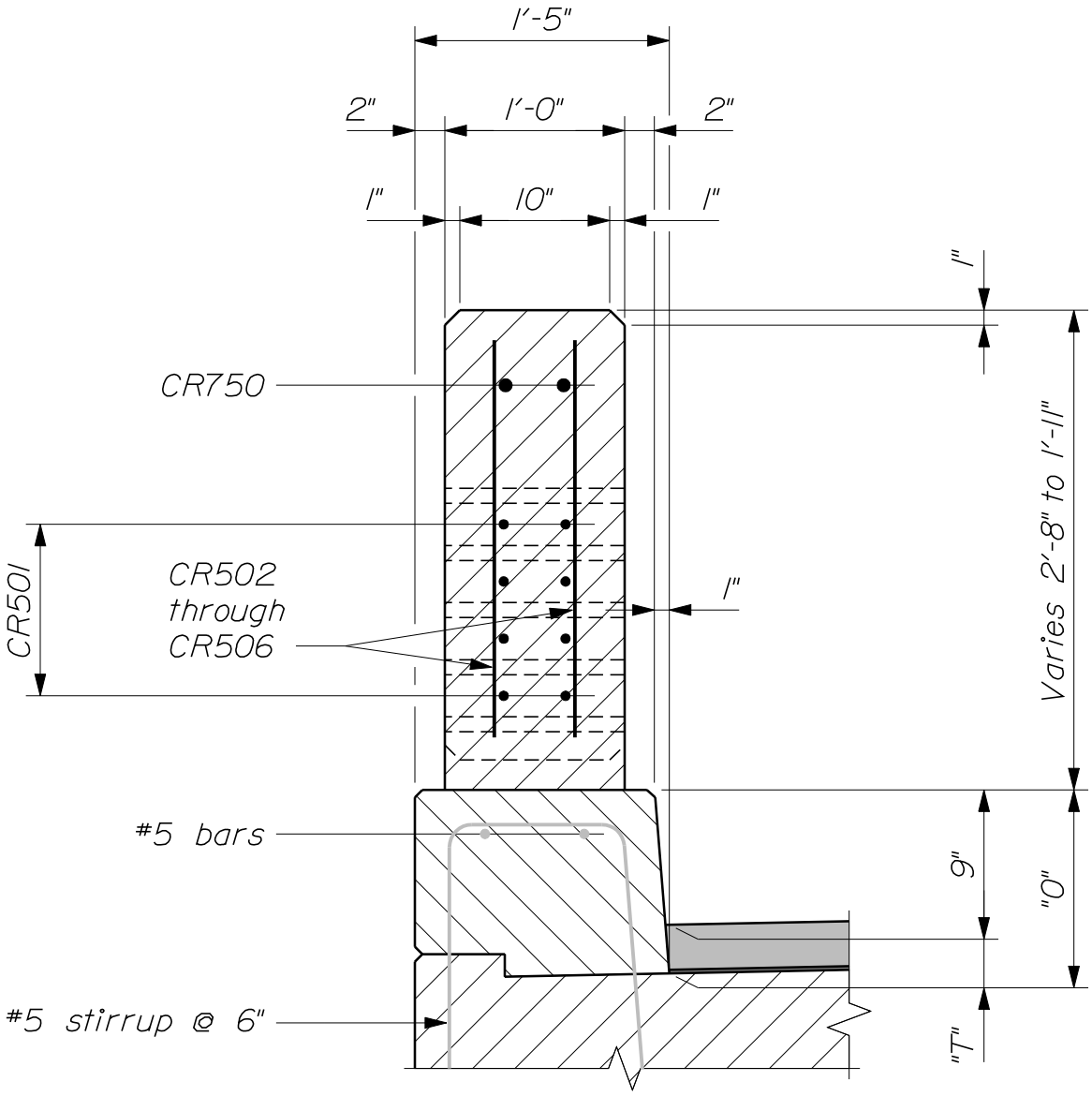

~ SECTION THROUGH NOSE ~

(Traffic Rail)

For Wearing Surface ("T") details, refer to Section 502 - Concrete Curb

TEXAS CLASSIC RAIL

526(47)

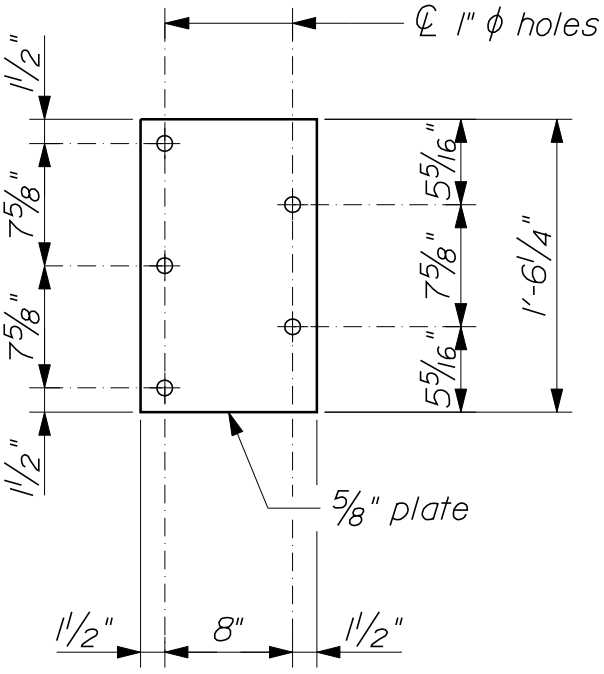

~ BEARING PLATE ~

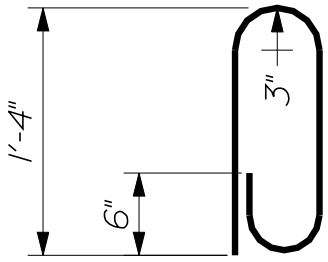

~ CR550 ~

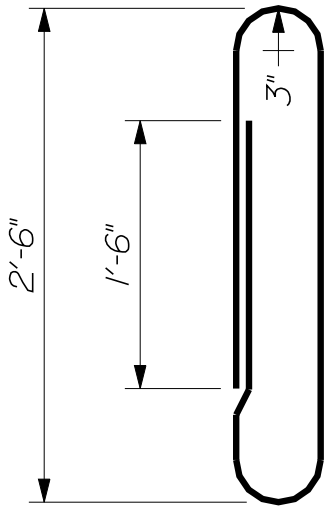

~ CR551 ~

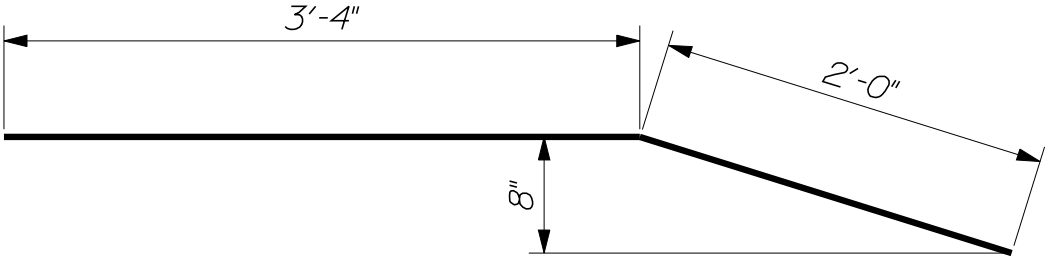

~ CR750 ~

TRAFFIC RAIL REINFORCING STEEL SCHEDULE					
Horizontal			Vertical		
Mark	Length	Location	Mark	Length	Location
CR500	30' max.	Rail Bot. & Curb	CR502	2'-2"	Nose
CR501	5'-3"	Nose/Post	CR503	2'-0"	Nose
			CR504	1'-10"	Nose
CR700	30' max.	Rail Top	CR505	1'-8"	Nose
CR750	5'-4"	Nose	CR506	1'-6"	Nose
			CR550	3'-9"	Rail & Post
			CR551	7'-1"	Rail & Post

TEXAS CLASSIC RAIL

526(48)

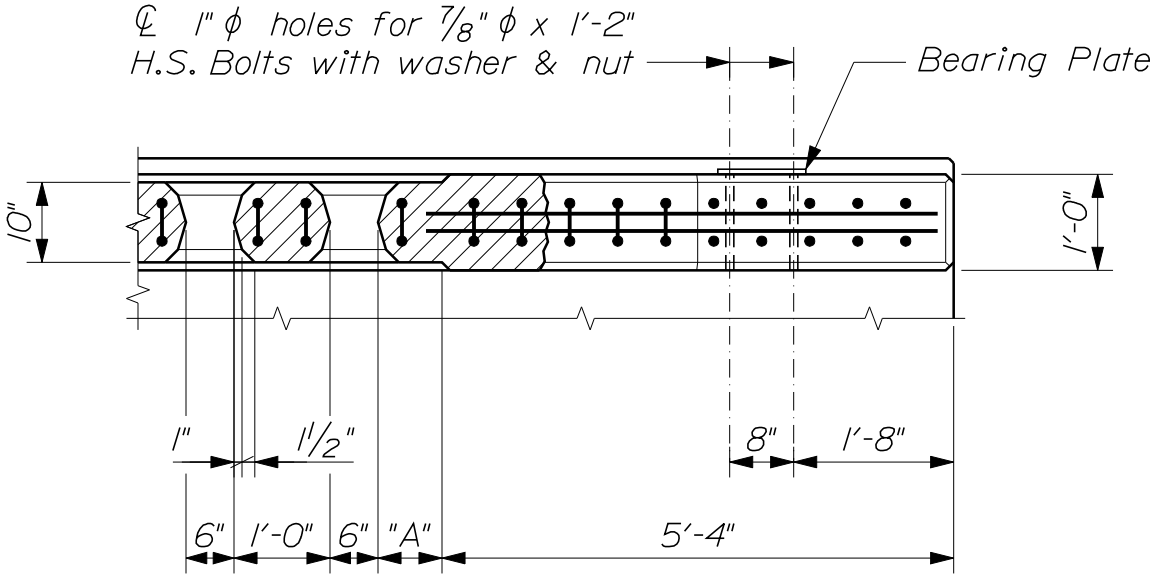

~ SIDEWALK RAIL PLAN ~

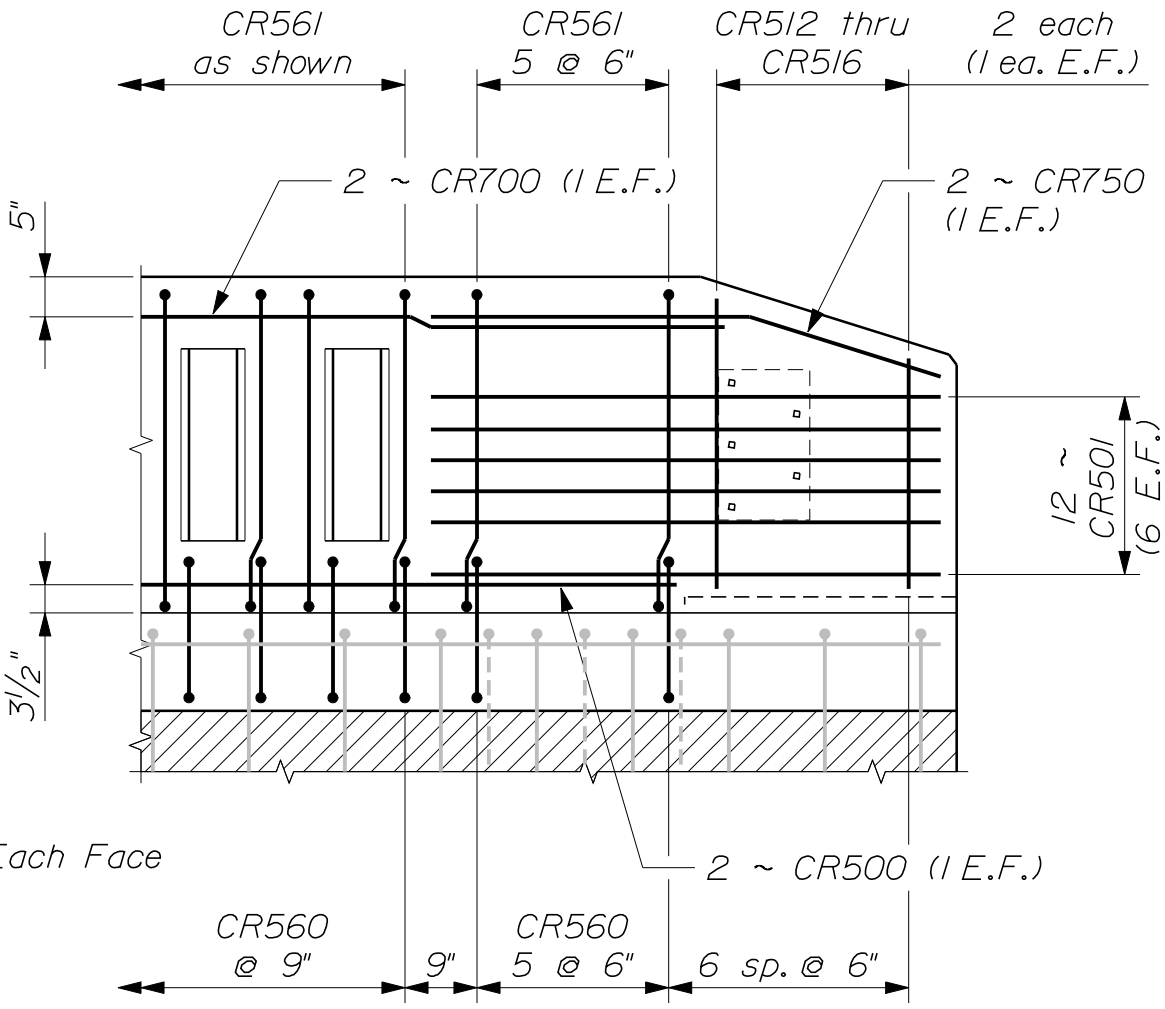

~ SIDEWALK RAIL ELEVATION ~

TEXAS CLASSIC RAIL

526(49)

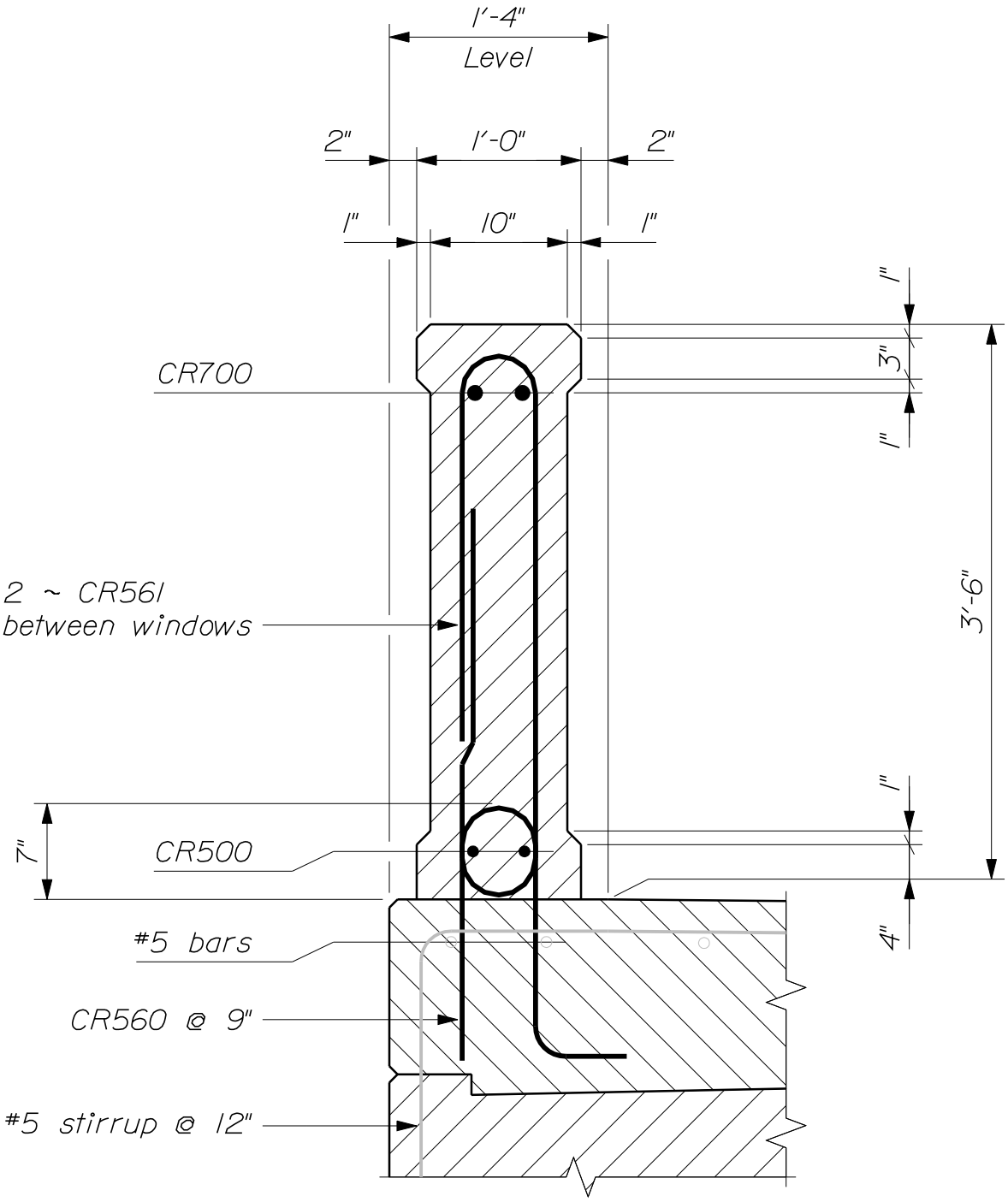

~ SECTION BETWEEN WINDOWS ~
(Sidewalk Rail)

TEXAS CLASSIC RAIL

526(50)

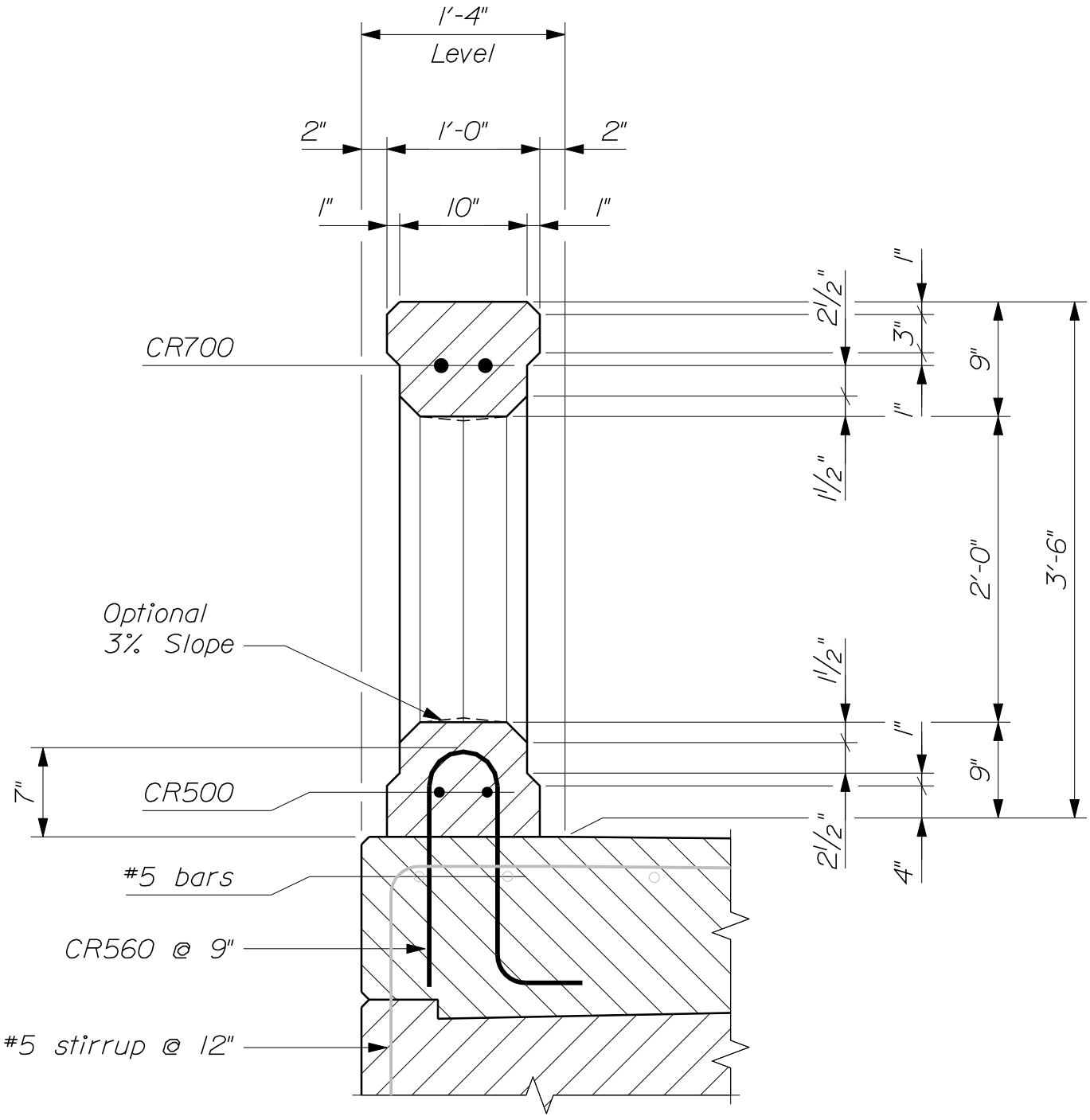

~ SECTION THROUGH WINDOW ~
(Sidewalk Rail)

TEXAS CLASSIC RAIL

526(51)

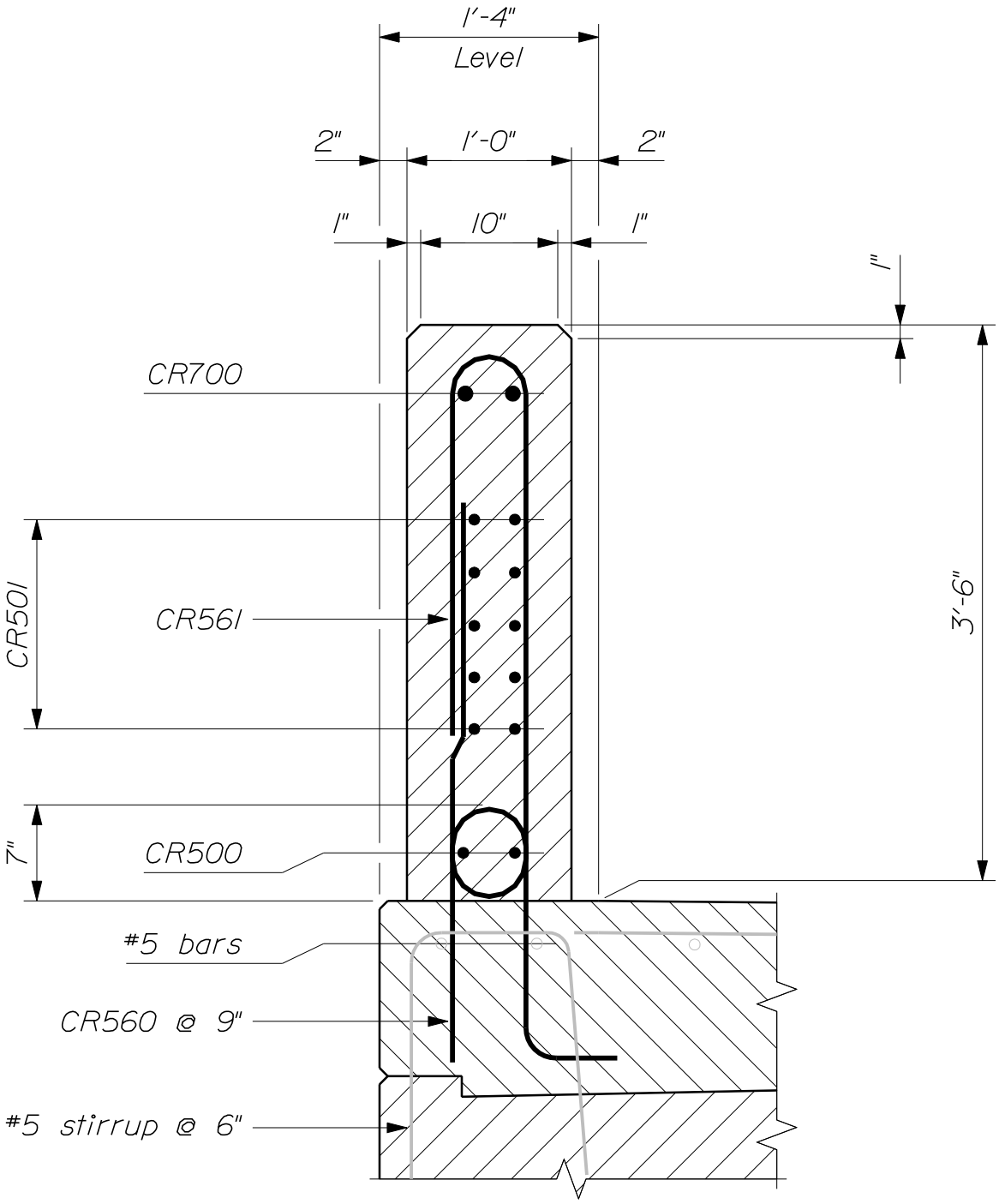

~ SECTION THROUGH POST ~
(Sidewalk Rail)

TEXAS CLASSIC RAIL

526(52)

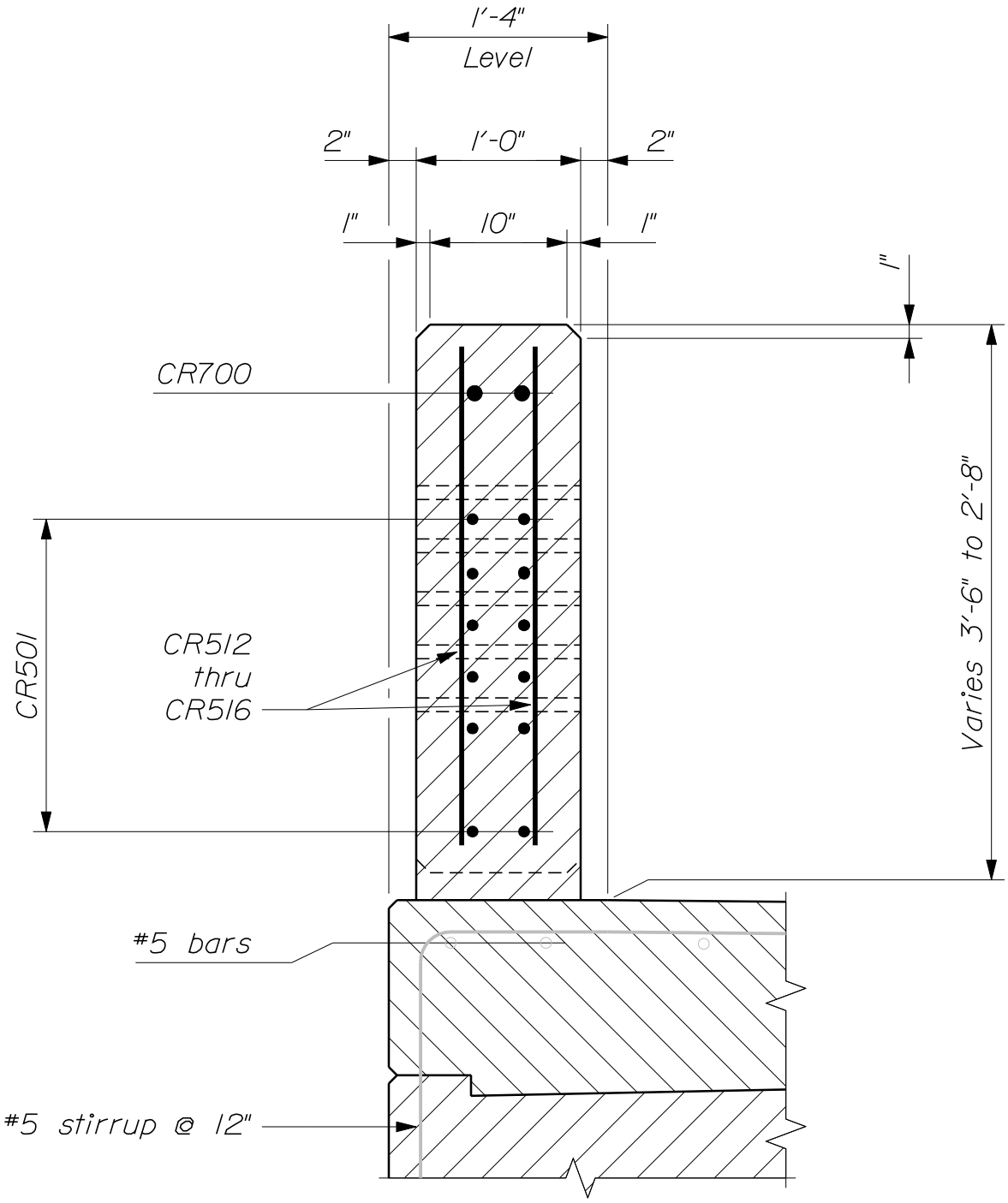

~ SECTION THROUGH NOSE ~
(Sidewalk Rail)

TEXAS CLASSIC RAIL

526(53)

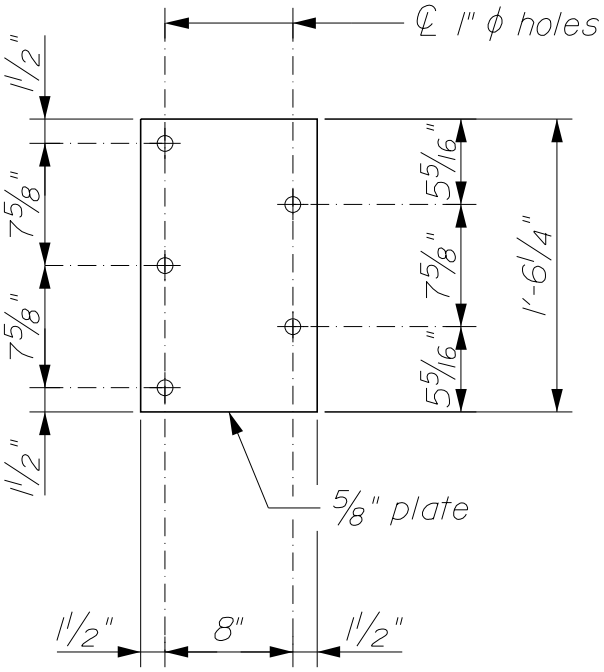

~ BEARING PLATE ~

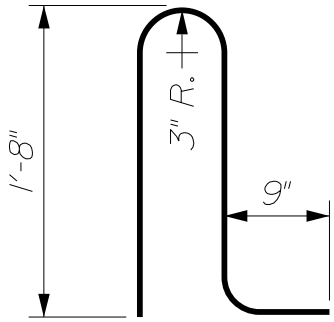

~ CR560 ~

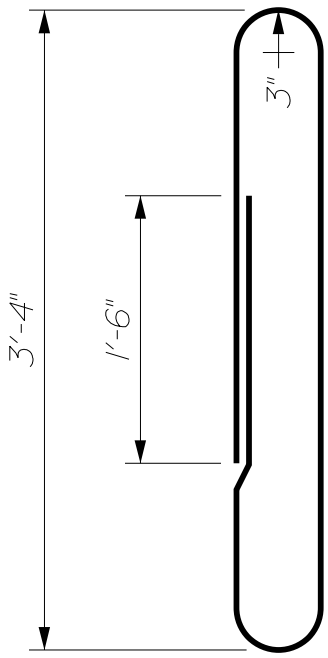

~ CR561 ~

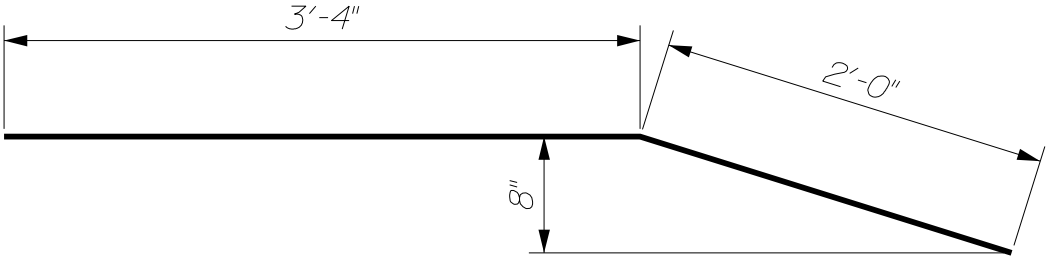

~ CR750 ~

SIDEWALK RAIL REINFORCING STEEL SCHEDULE					
Horizontal			Vertical		
Mark	Length	Location	Mark	Length	Location
CR500	30' max.	Rail Bot. & Curb	CR512	2'-11"	Nose
CR501	5'-3"	Nose/Post	CR513	2'-9"	Nose
			CR514	2'-7"	Nose
CR700	30' max.	Rail Top	CR515	2'-5"	Nose
CR750	5'-4"	Nose	CR516	2'-3"	Nose
			CR560	4'-0"	Rail & Post
			CR561	8'-9"	Rail & Post

TEXAS CLASSIC RAIL

526(54)

NOTES:

1. All work and materials shall conform to the provisions of Standard Specifications Section 526 - Concrete Barrier.

2. Vertical surfaces and recesses shall be plumb. Tops and bottoms of window openings may be level or parallel to the grade of the rail.

3. Contraction joints shall be located over piers on continuous structures and at 30-ft ± intervals along the length of all bridges. Do not extend reinforcing steel through the contraction joints.

4. Reinforcing steel shall have a minimum concrete cover of 2 inches.

5. The first digit following the letters of the bar mark indicates the size of the reinforcing bar. (CR500 = #5 bar.) All dimensions are out - to - out of bar.

6. Minimum lap splice lengths are 2'-0" for CR500 and 3'-2" for CR700.

7. When the end post is cantilevered over an expansion joint, provide a block - out as shown.

8. For details of curb / sidewalk expansion dams where necessary, refer to the Standard Detail for the appropriate Expansion Device.

9. Bolt holes in concrete shall be formed by a method approved by the Resident.

10. Payment for threaded rods, nuts, washers and bearing plates will be considered incidental to the Texas Classic Rail pay item.

11. For details of the Concrete Transition Curb, refer to Standard Details Section 609, Precast Concrete Transition Curb. Payment for the transition curb will be considered incidental to the Texas Classic Rail pay item.

12. If there is a conflict between these Standard Details and the Design Drawings, the requirements of the Design Drawings shall be followed.

MATERIALS:

Concrete	Class "LP"
Reinforcing Steel	AASHTO M 31M/M 31, Grade 60
Bearing Plate	AASHTO M 270M/M 270, Grade 36 (Galvanized)
Threaded rods	AASHTO M 314, Grade 105 (Galvanized)

TEXAS CLASSIC RAIL

526(55)

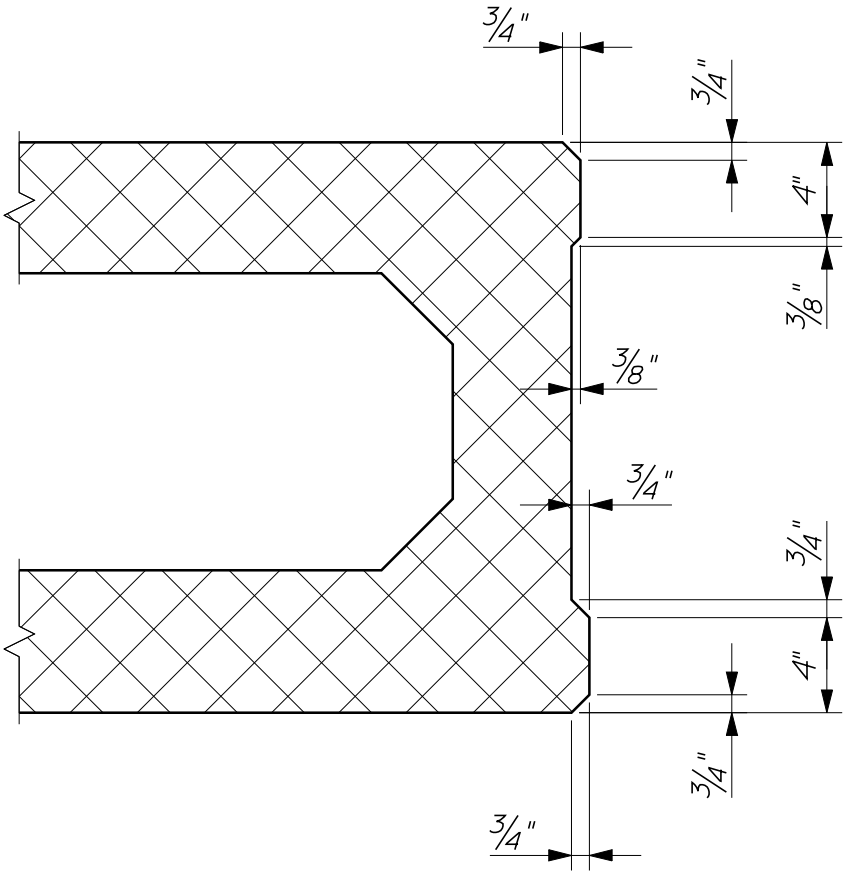

~ SHEAR KEY DIMENSIONS ~
(Typical for all precast slabs and box beams)

PRECAST SUPERSTRUCTURE

535(01)

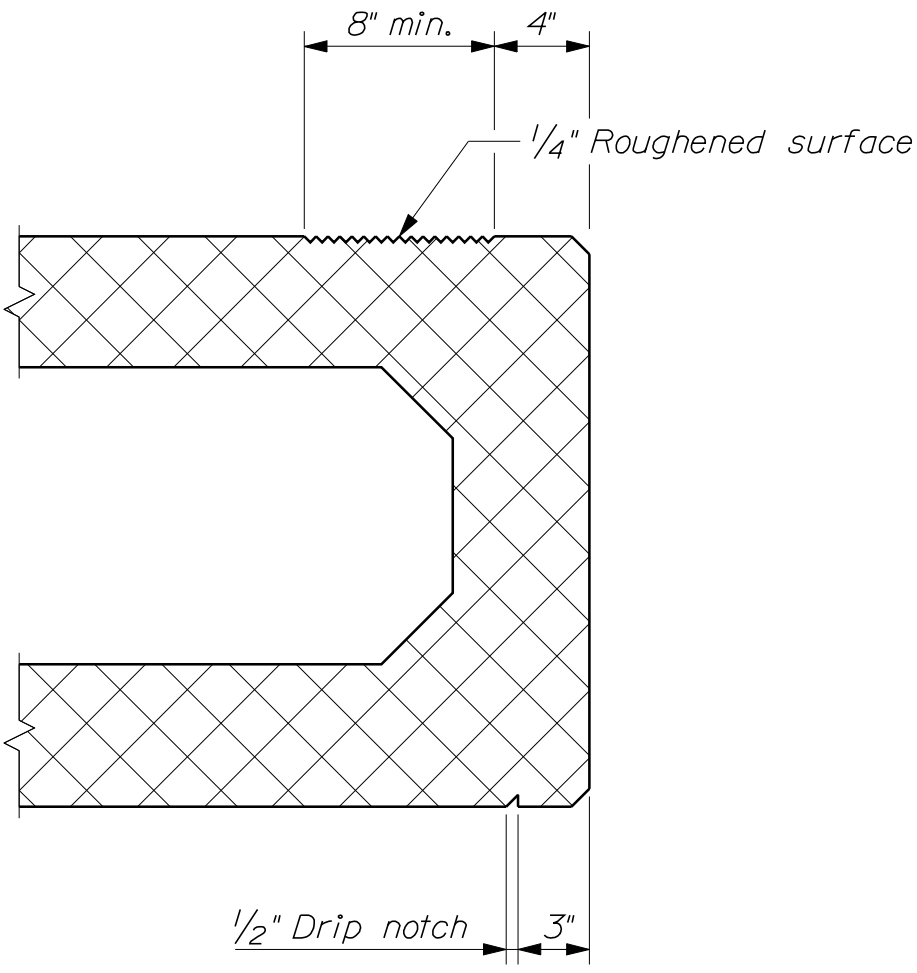

~ FASCIA DETAILS ~

(Exterior units only)

(Entire top surface is roughened with reinforced C.I.P. slab)

PRECAST SUPERSTRUCTURE

535(02)

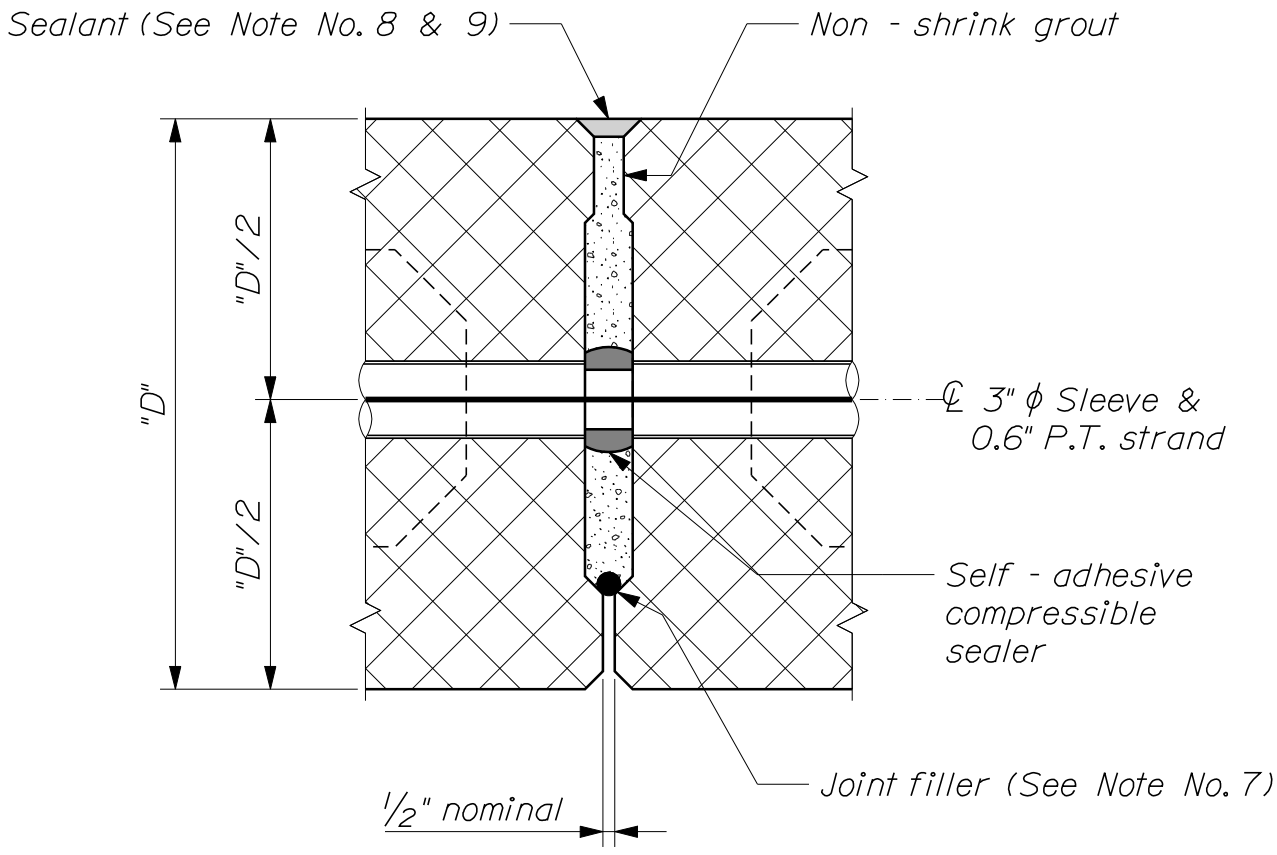

~ SHEAR KEY DETAIL ~

(For precast slabs and box beams where "D" ≤ 24")

PRECAST SUPERSTRUCTURE

535(03)

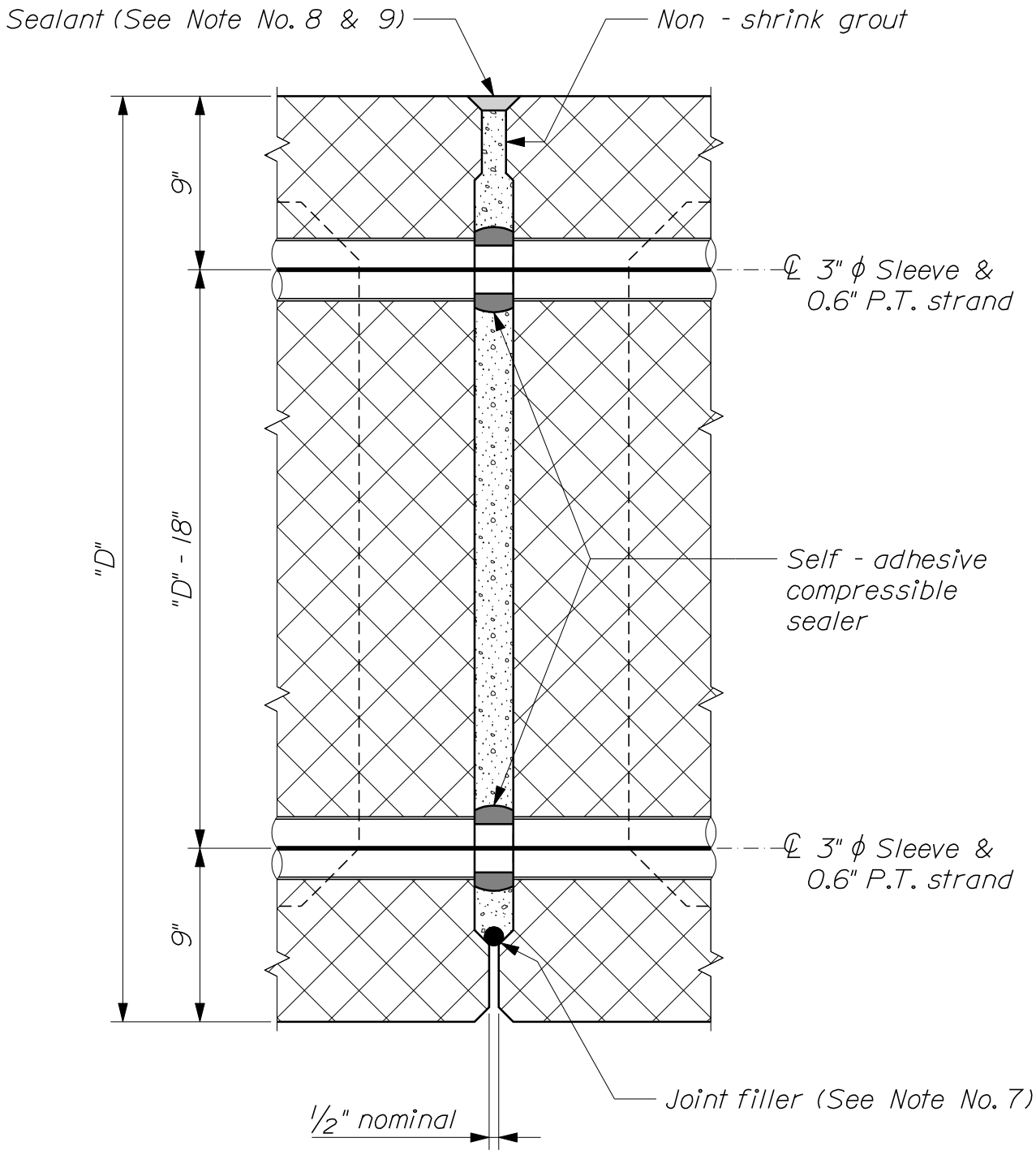

~ SHEAR KEY DETAIL ~
(For precast box beams where "D" ≥ 27")

PRECAST SUPERSTRUCTURE

535(04)

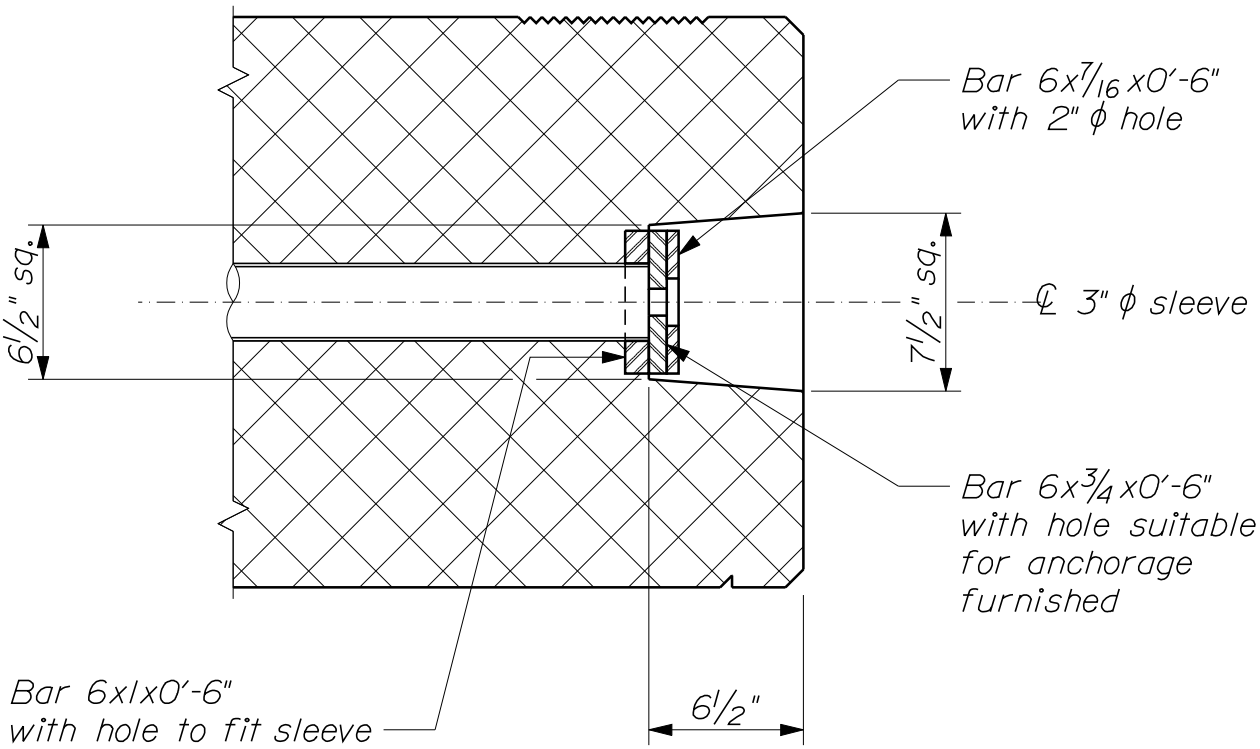

-- POST - TENSIONING BLOCK - OUT DETAIL --

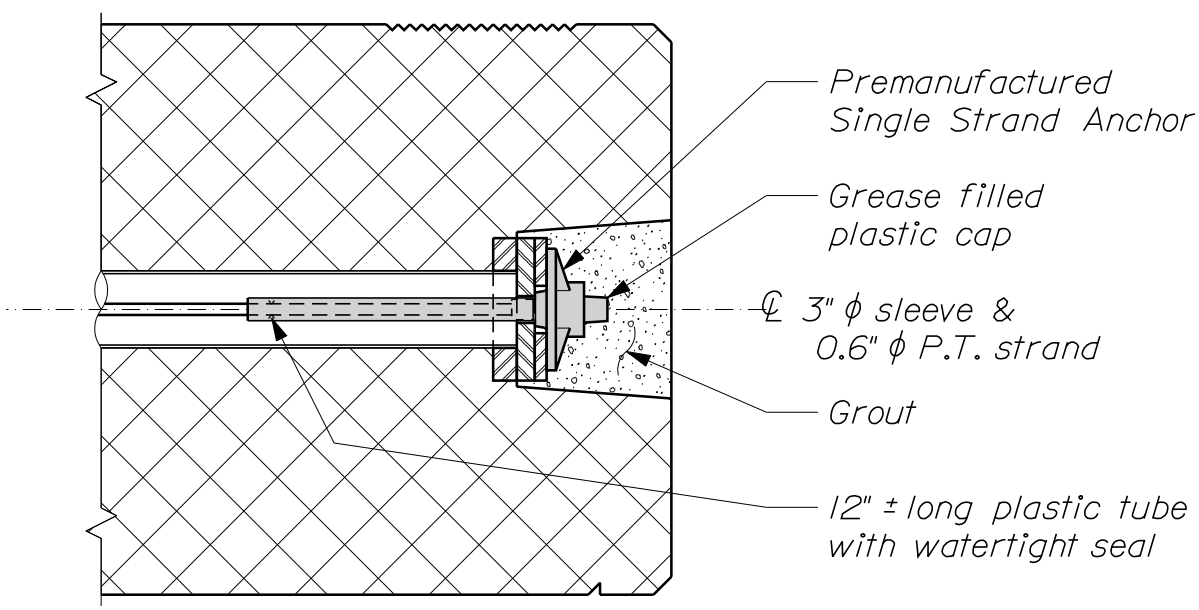

-- POST - TENSIONING ANCHORAGE DETAIL --

PRECAST SUPERSTRUCTURE

535(05)

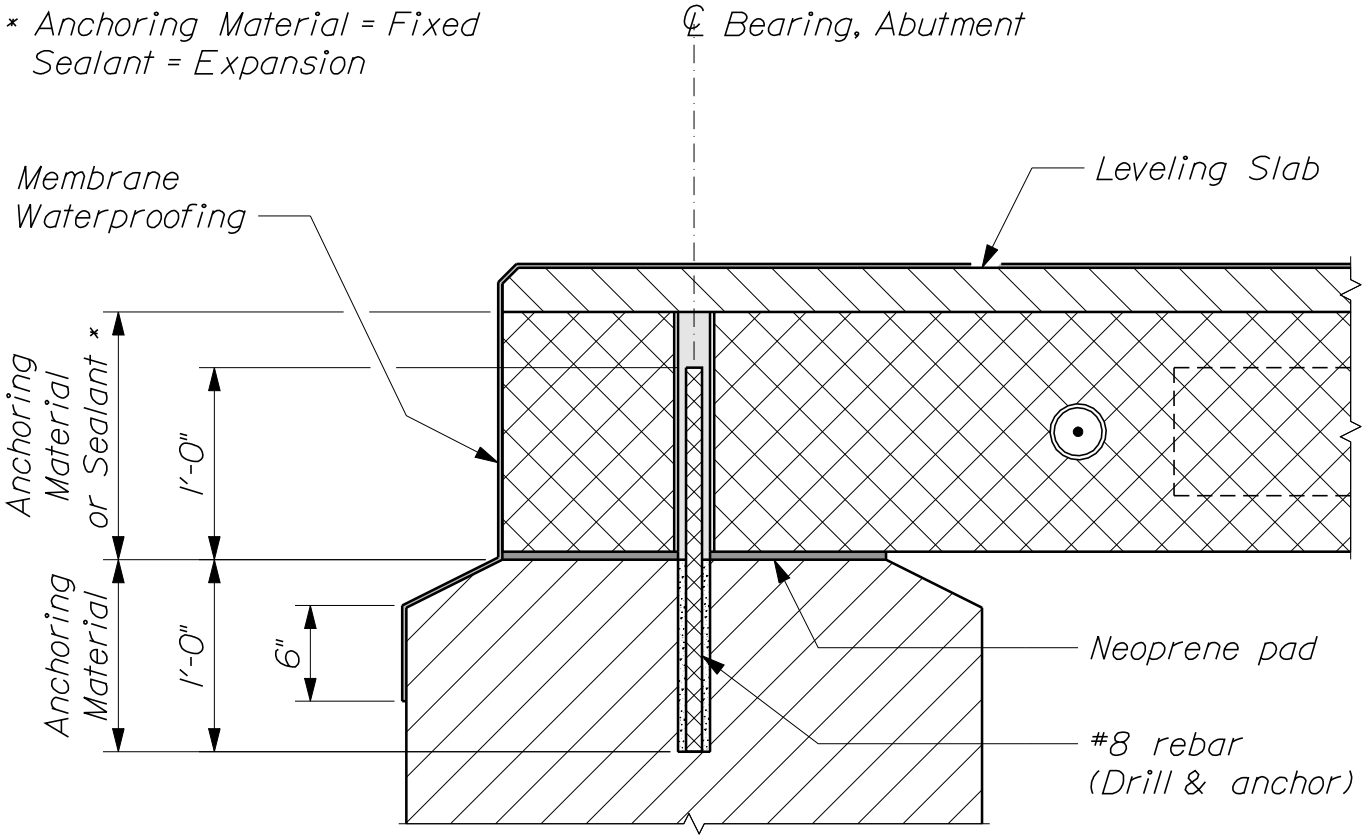

~ LONGITUDINAL SECTION ~

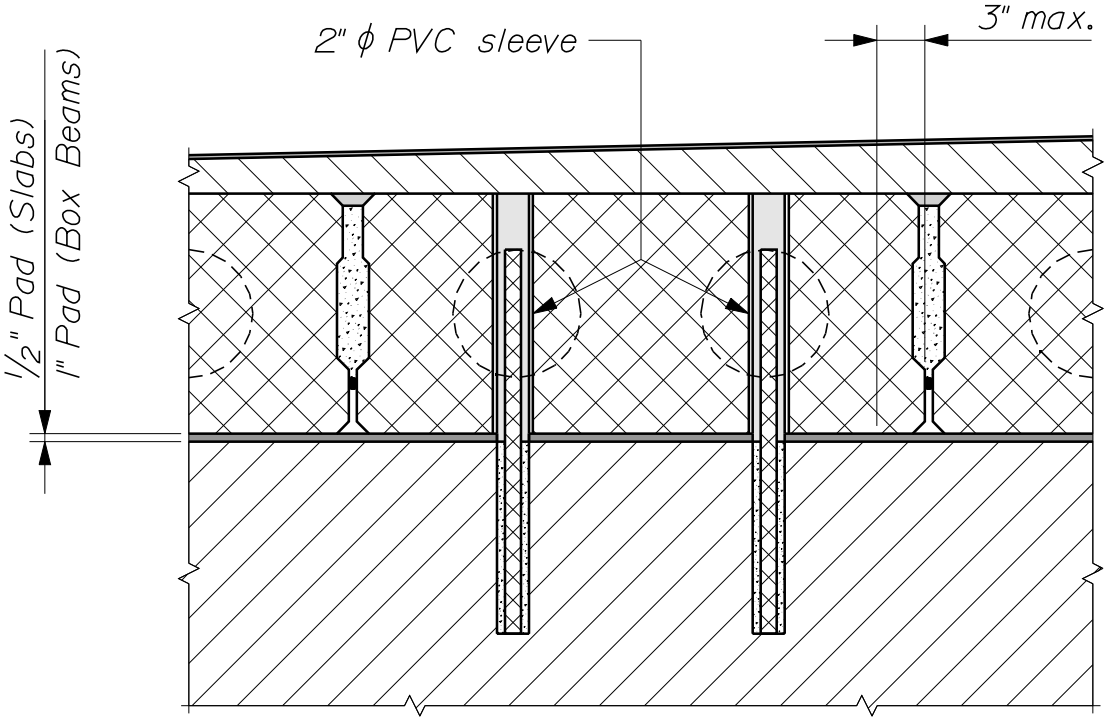

~ TRANSVERSE SECTION ~

PRECAST SUPERSTRUCTURE

535(06)

PRECAST SLABS						
Slab Type	Nom. Width	Depth "D"	Void "ϕ_1"	Void "ϕ_2"	Spacing "X_1"	Spacing "X_2"
S36-12	36"	12"	--	--	--	--
S36-15	36"	15"	8"	--	10"	15 1/2"
S36-18	36"	18"	10"	--	10"	15 1/2"
S36-21	36"	21"	12"	--	10"	15 1/2"
S48-12	48"	12"	--	--	--	--
S48-15	48"	15"	8"	8"	10"	13 3/4"
S48-18	48"	18"	10"	10"	9 1/2"	14 1/4"
S48-21	48"	21"	12"	10"	9 1/2"	14 1/4"

PRECAST BOX BEAMS					
Box Type	Nom. Width	Depth "D"	Box Type	Nom. Width	Depth "D"
B36-24	36"	24"	B48-24	48"	24"
B36-27	36"	27"	B48-27	48"	27"
B36-30	36"	30"	B48-30	48"	30"
B36-33	36"	33"	B48-33	48"	33"
B36-36	36"	36"	B48-36	48"	36"
B36-39	36"	39"	B48-39	48"	39"
B36-42	36"	42"	B48-42	48"	42"
B36-45	36"	45"	B48-45	48"	45"
B36-48	36"	48"	B48-48	48"	48"

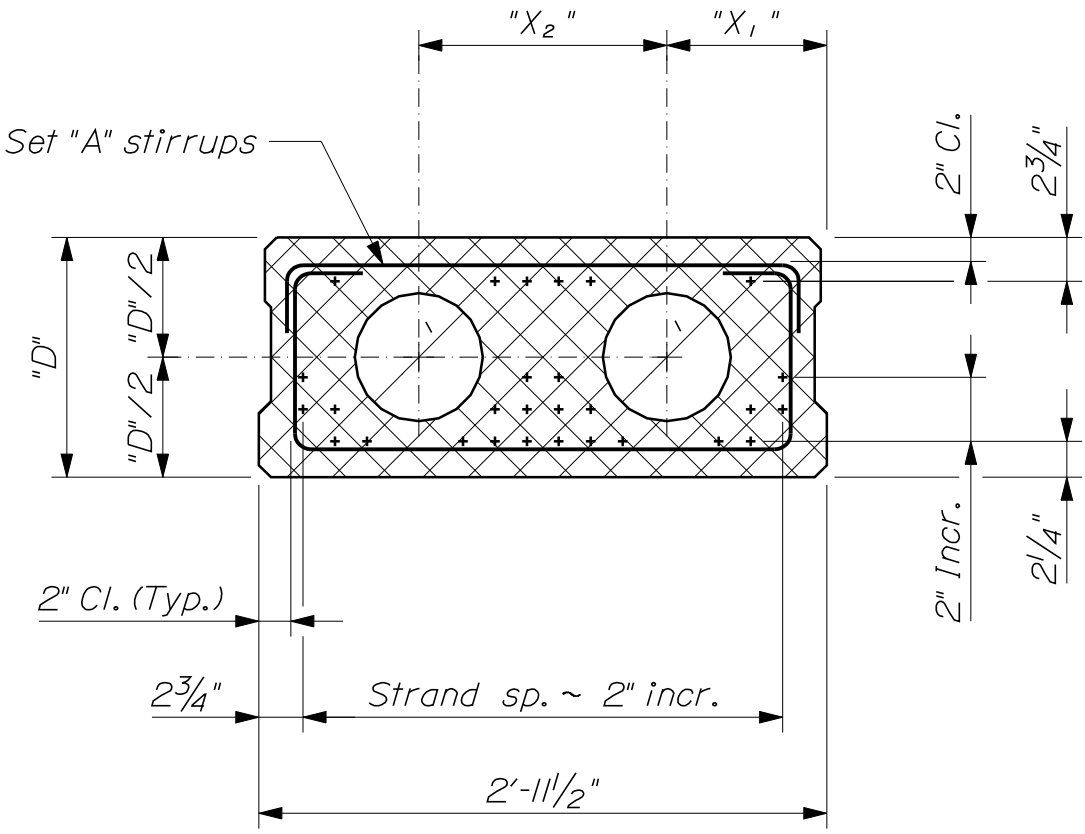

~ TYPICAL SECTION ~
(36" Wide Precast Slab)

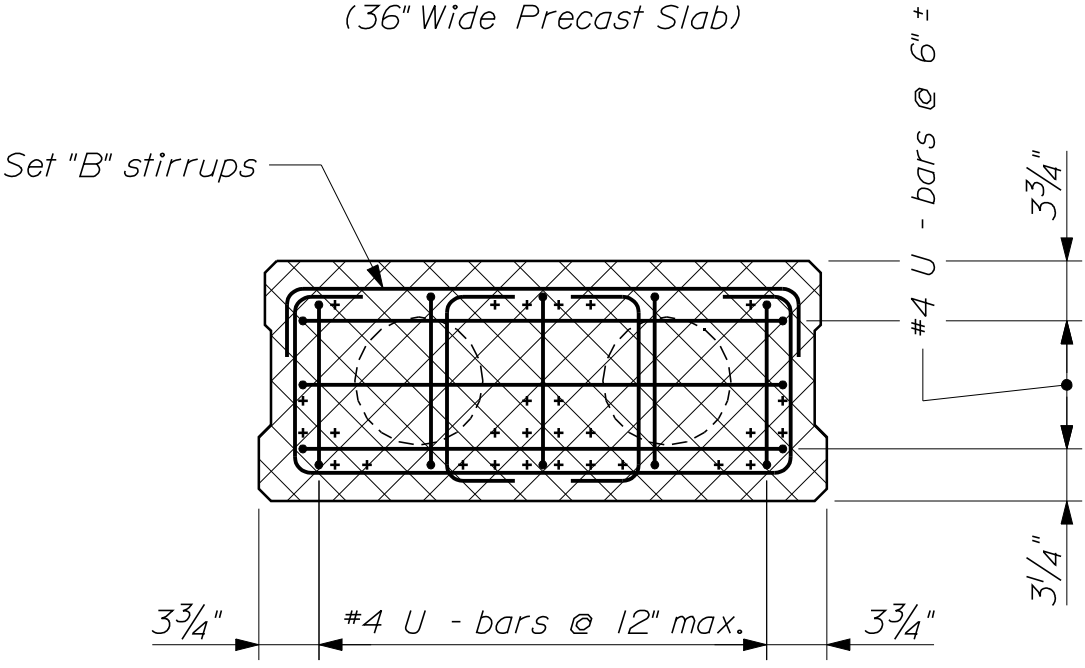

~ END BLOCK SECTION ~
(36" Wide Precast Slab)

PRECAST SUPERSTRUCTURE

535(08)

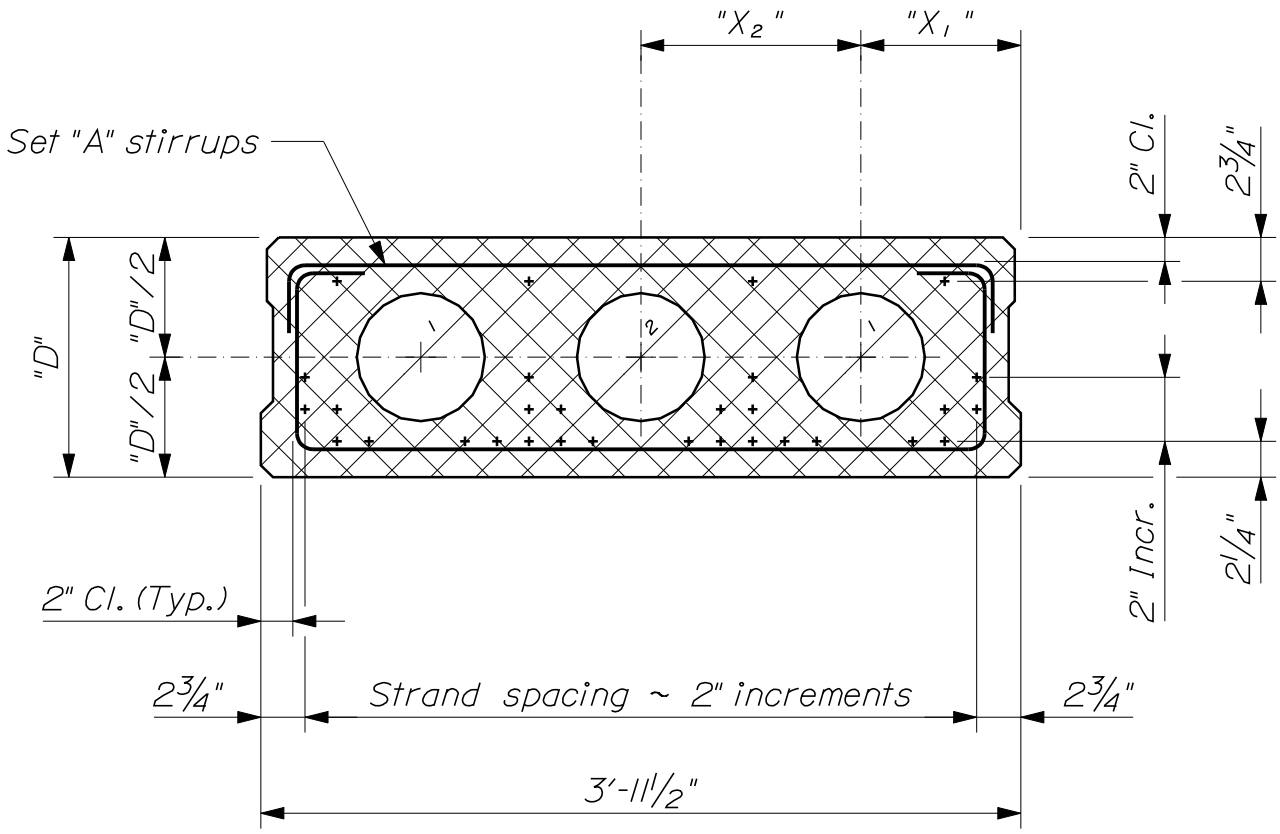

~ TYPICAL SECTION ~
(48" Wide Precast Slab)

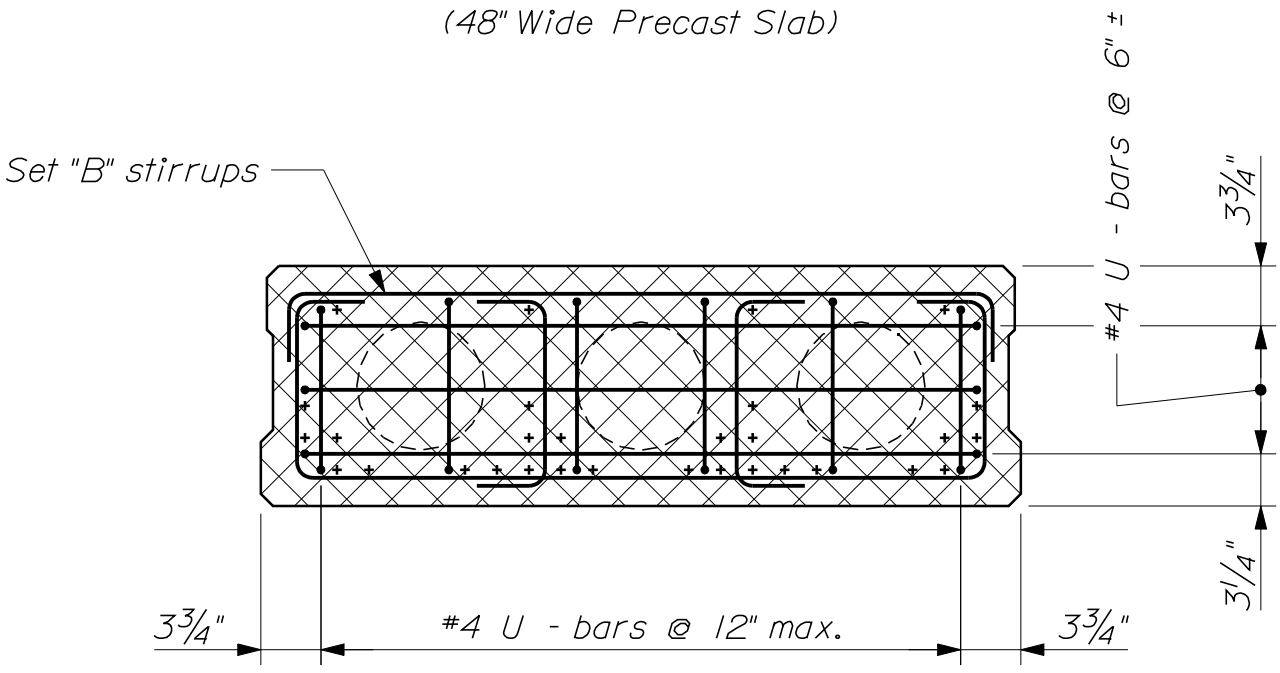

~ END BLOCK SECTION ~
(48" Wide Precast Slab)

PRECAST SUPERSTRUCTURE

535(09)

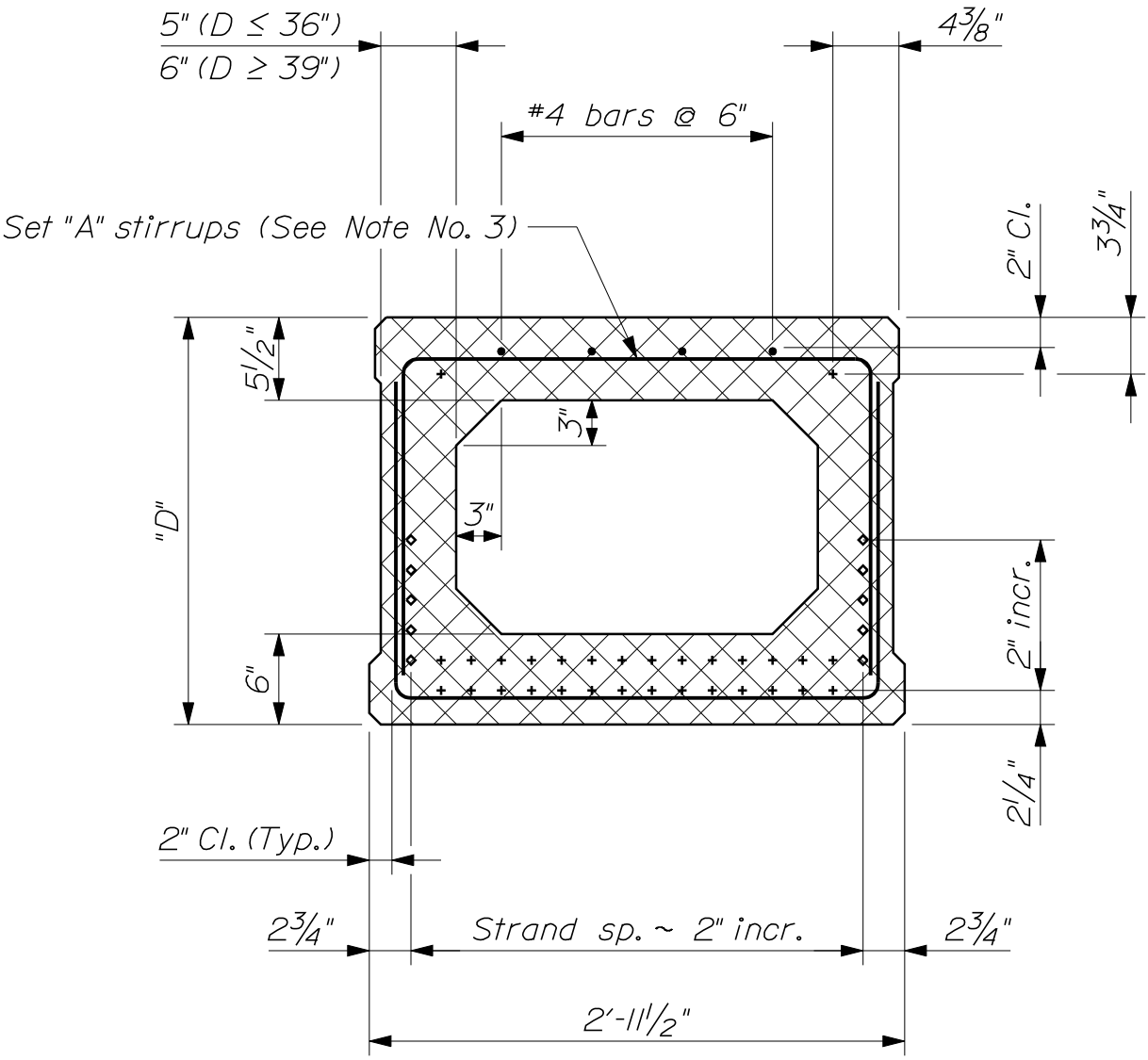

~ TYPICAL SECTION ~
(36" Wide Precast Box Beam)

+ Straight Strands
◇ Draped Strands

PRECAST SUPERSTRUCTURE

535(10)

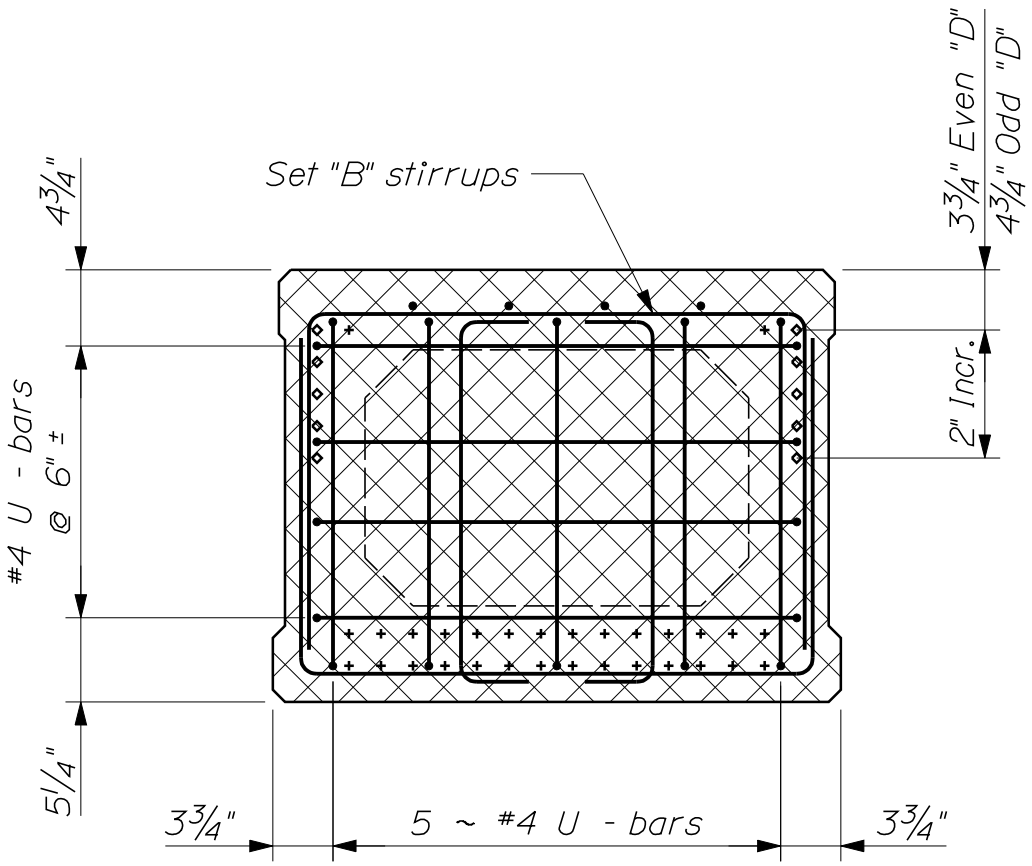

~ END BLOCK SECTION ~
(36" Wide Precast Box Beam)

+ Straight Strands
◇ Draped Strands

PRECAST SUPERSTRUCTURE

535(11)

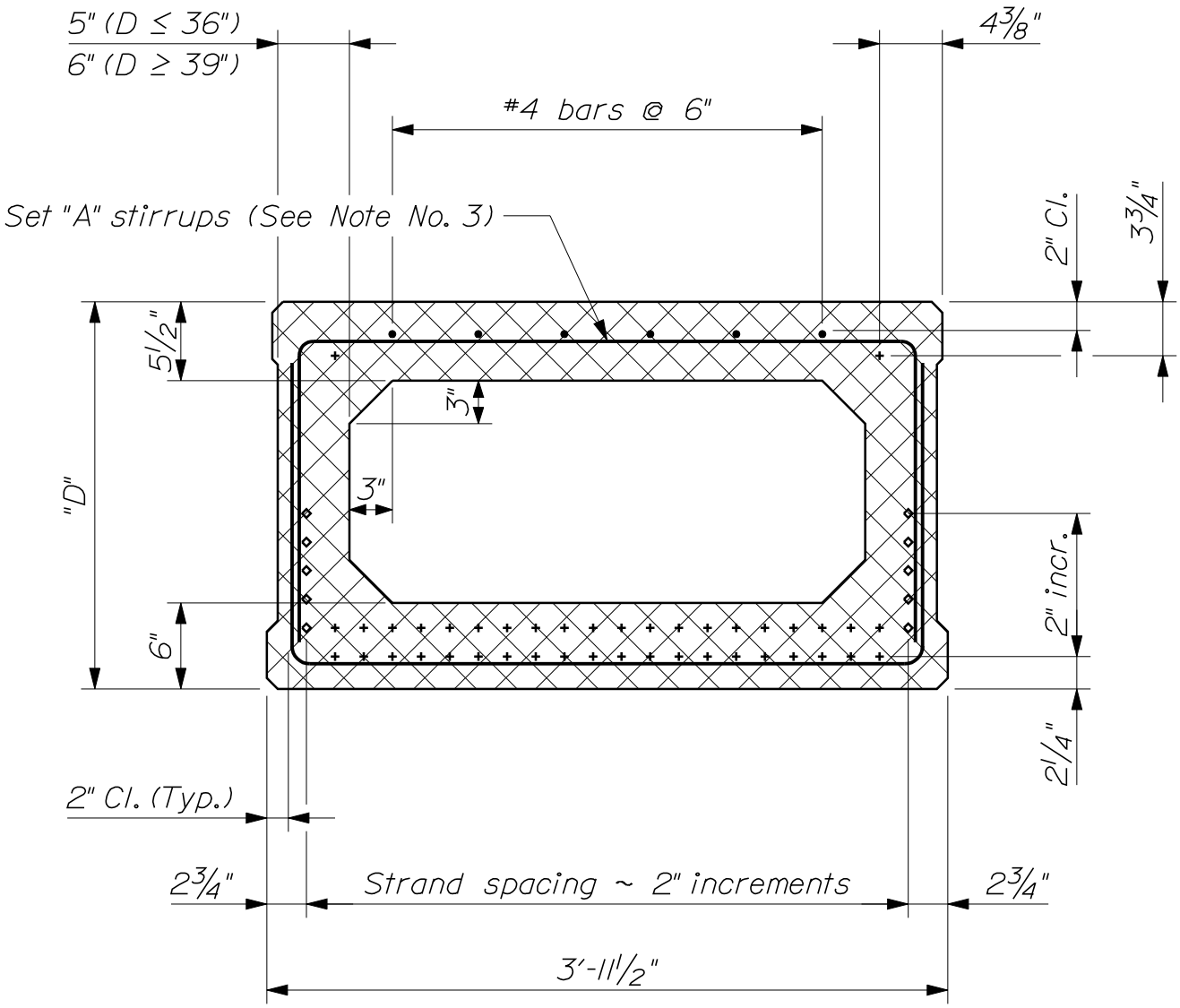

~ TYPICAL SECTION ~
(48" Wide Precast Box Beam)

+ Straight Strands
◇ Draped Strands

PRECAST SUPERSTRUCTURE

535(12)

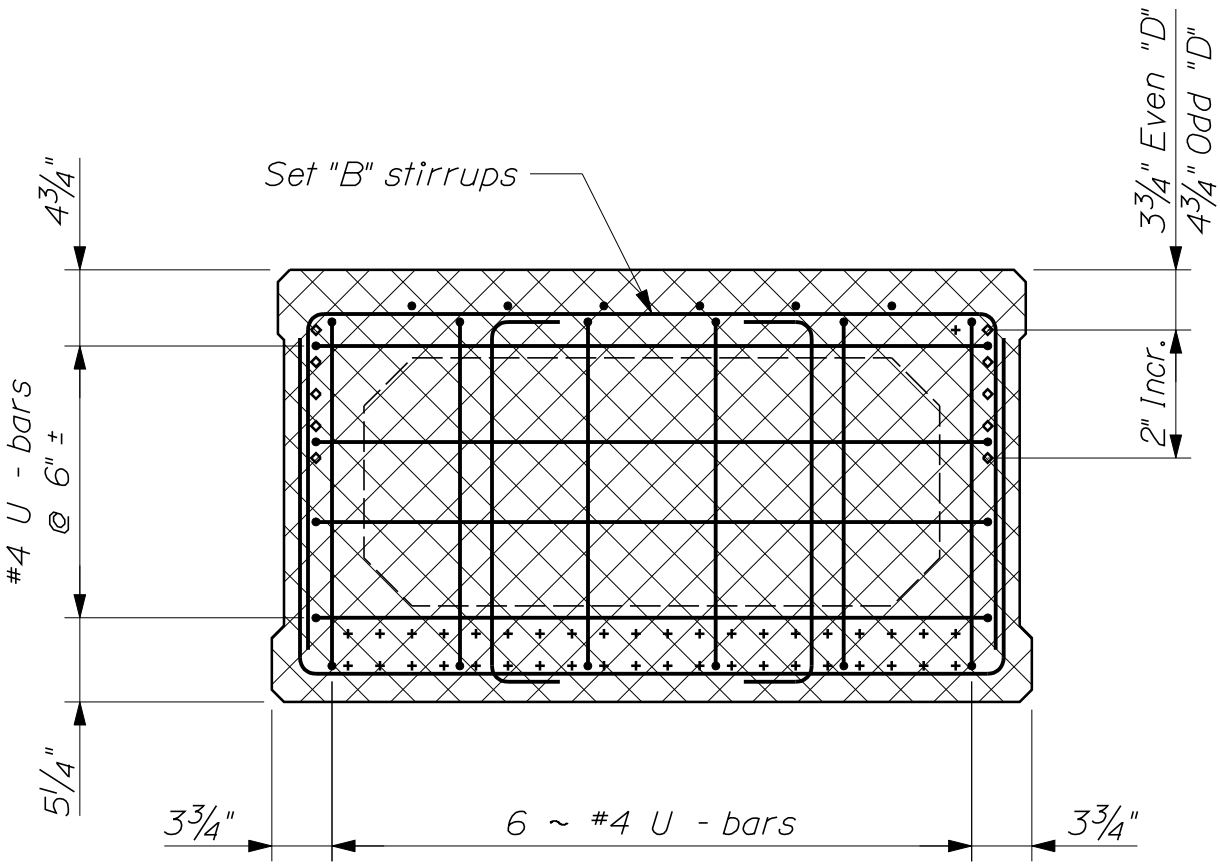

~ END BLOCK SECTION ~
(48" Wide Precast Box Beam)

+ Straight Strands
◇ Draped Strands

PRECAST SUPERSTRUCTURE

535(13)

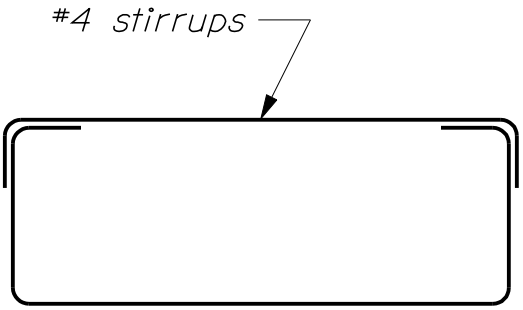

~ SET "A" STIRRUPS ~
(Precast Slab)

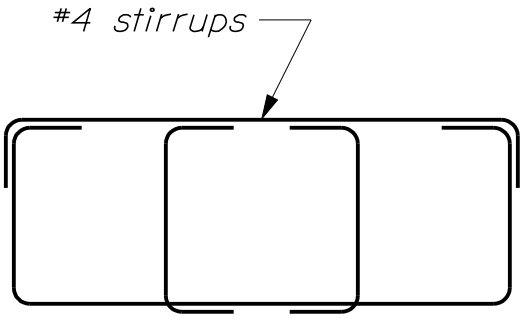

~ SET "B" STIRRUPS ~
(Precast Slab)

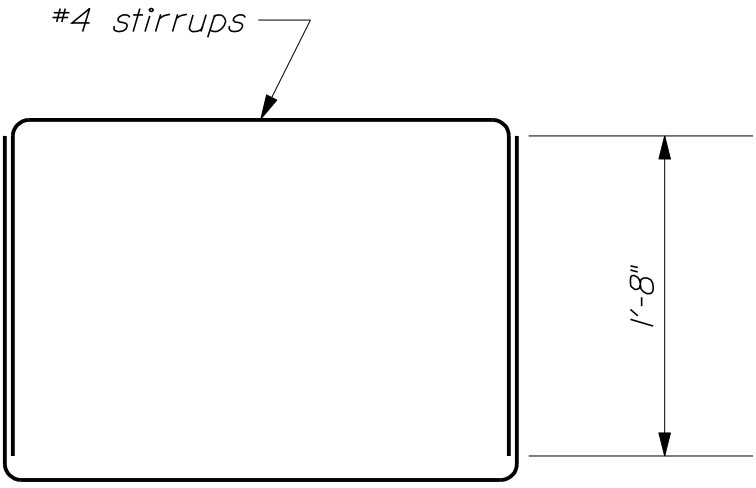

~ SET "A" STIRRUPS ~
(Precast Box Beam)

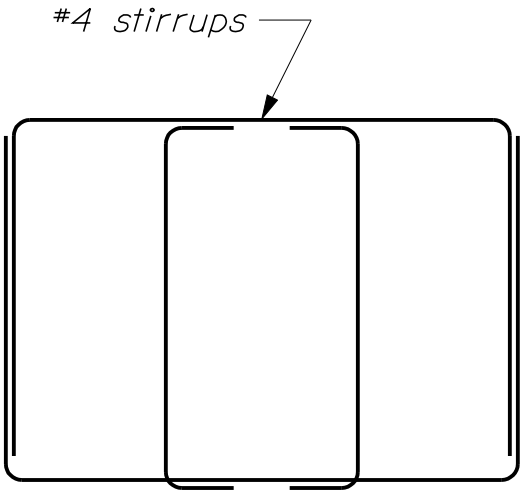

~ SET "B" STIRRUPS ~
(Precast Box Beam)

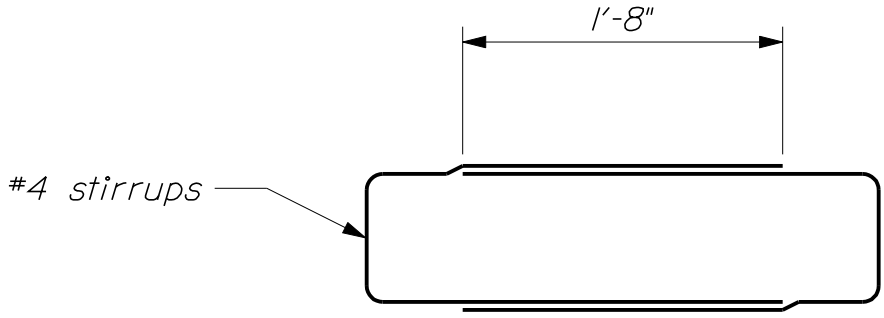

~ ALTERNATE STIRRUP CONFIGURATION ~
(Always use for S36-12 and S48-12 slabs)

PRECAST SUPERSTRUCTURE

535(14)

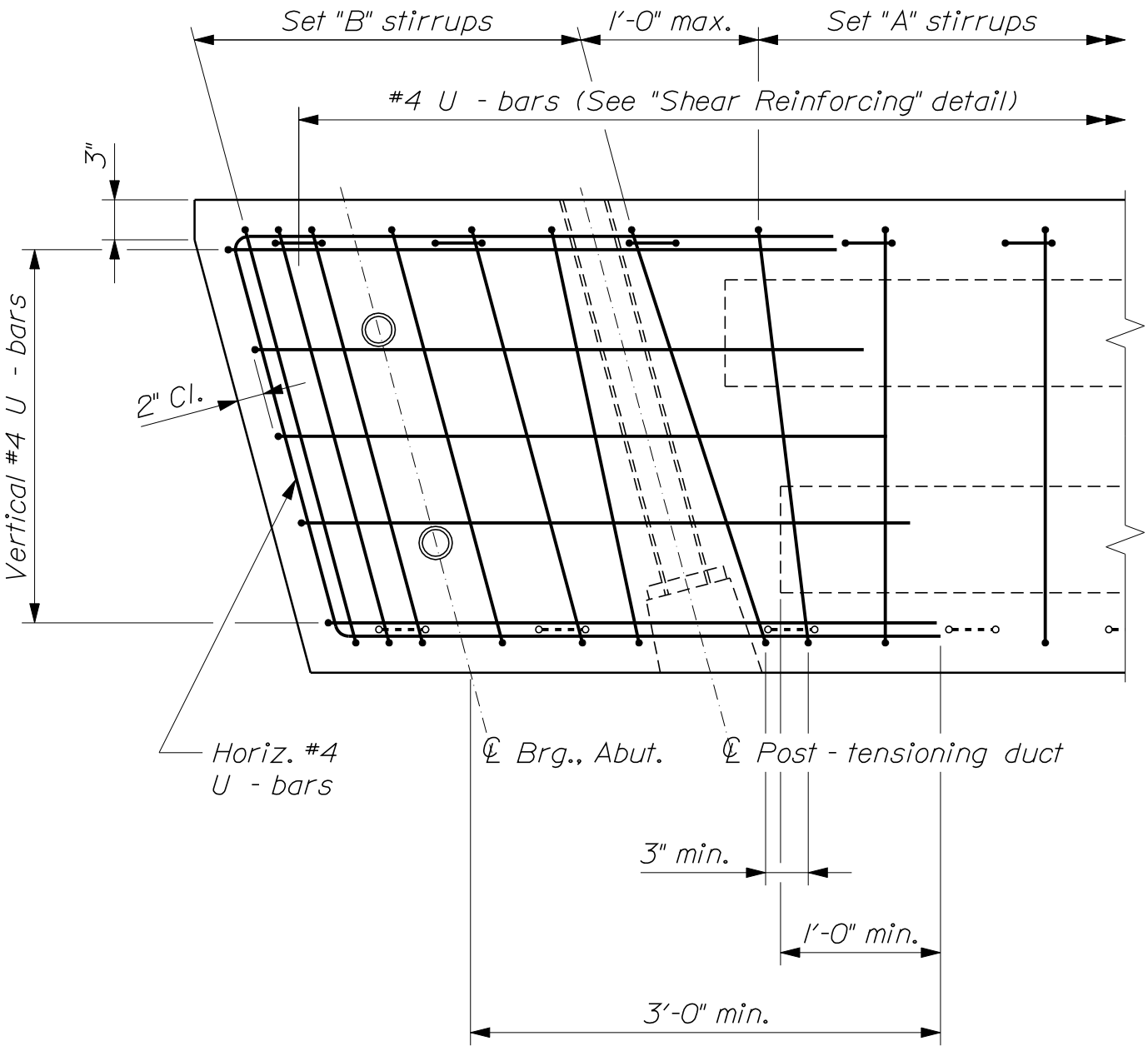

~ TYPICAL PRECAST UNIT PLAN ~
(Voided Slab shown; Box Beam similar)

PRECAST SUPERSTRUCTURE

535(15)

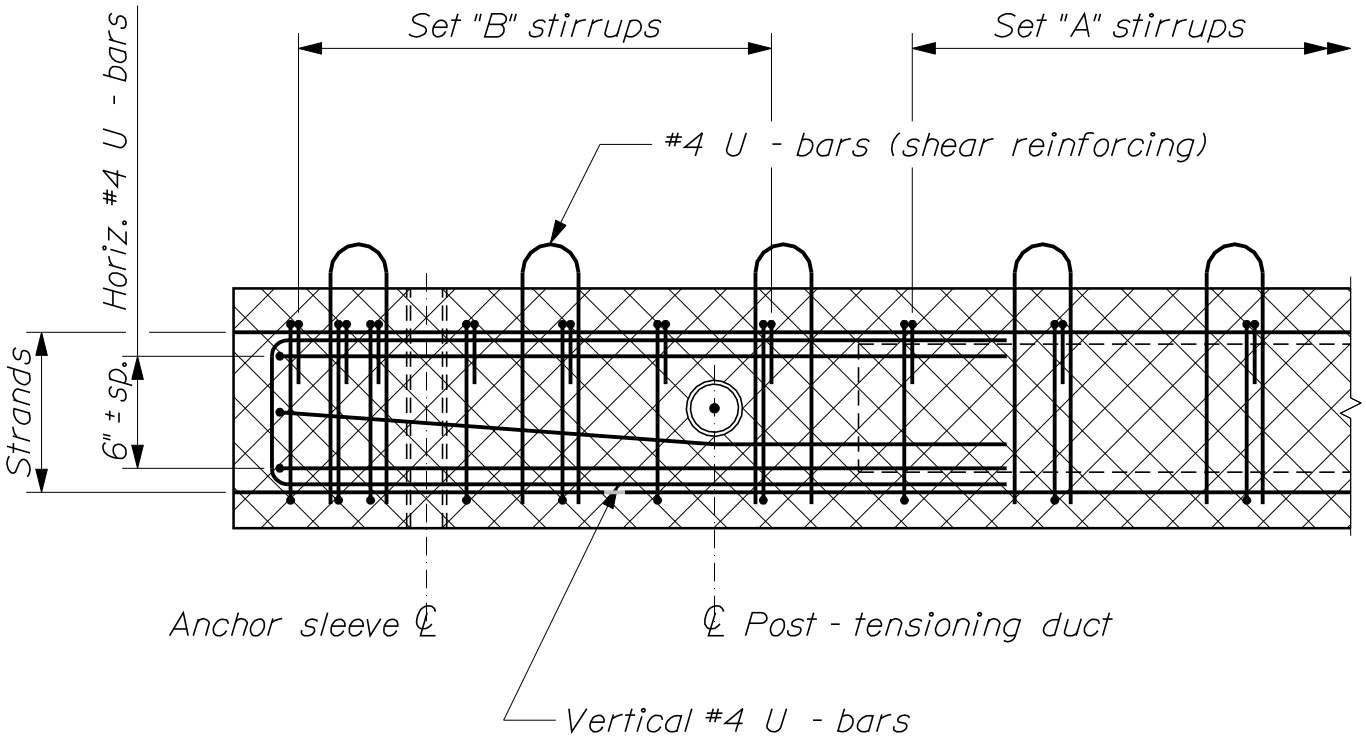

~ TYPICAL LONGITUDINAL SECTION ~

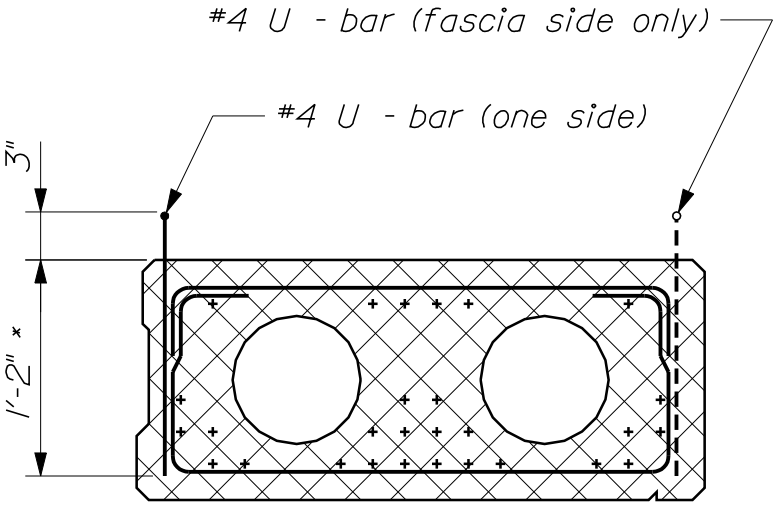

~ SHEAR REINFORCING ~
(For use with reinforced C.I.P. slab)

* 10" for S12 slabs
12" for S15 slabs

PRECAST SUPERSTRUCTURE

535(16)

NOTES:

1. Prestressing strands shown in the various details are schematic in nature and do not represent any specific design requirements.

2. Reinforcing steel shown is the required minimum. Individual designs may vary. Bending details and hooks shall conform to the recommendations of the current revision of ACI Standards 315 and 318.

3. For box beams, unless the design drawings specify a separate reinforced concrete slab to be constructed over the box beams, additional upper #4 stirrups shall be provided such that the maximim spacing of the upper stirrups over the voided areas is 12 inches.

4. All plates in the post - tensioning block - out detail shall be galvanized in accordance with ASTM A 123.

5. Concrete around lifting devices shall be recessed a minimum of one inch below the surface. The recess shall be patched with an approved grout after removal of the lifting device.

6. For bridge skew angles up to 15°, the neoprene pad at the bearing area shall cover the entire bridge seat. Seams perpendicular to the centerline of bearing will be allowed provided that the seam occurs near the center of a precast unit with the unit bearing approximately equally on both pad pieces. For bridge skew angles greater than 15°, other bearing area treatment may be shown on the design drawings.

7. The Contractor will be responsible for providing a joint filler system adequate to contain the keyway grout during placement. No extra payment will be made for such system or for necessary repairs or other extra work if the joint filler system fails.

8. The shear key sealant shall be one of the polyurethane - based products listed on the MaineDOT Qualified Products List of Pour - In - Place Joint Sealant.

9. When a high - performance waterproofing membrane is to be applied directly to the top of the precast units, eliminate the shear key sealant and fill the shear key to the top of the unit with non - shrink grout.

10. If there is a conflict between these Standard Details and the Design Drawings, the requirements of the Design Drawings shall be followed.