MAINE DEPARTMENT OF TRANSPORTATION
BRIDGE PROGRAM
GEOTECHNICAL SECTION
AUGUSTA, MAINE

GEOTECHNICAL DESIGN REPORT

For the Replacement of:

HANCOCK BRIDGE
EMBDEN POND ROAD OVER HANCOCK BROOK
EMBDEN, MAINE

Prepared by:
Brandon Slaven
Assistant Geotechnical Engineer

Reviewed by:
Laura Krusinski, P.E.
Senior Geotechnical Engineer

Somerset County
WIN 21689.00

Soils Report No. 2018-44
Bridge No. 3372

November 19, 2018
STP-2168(900)

Table of Contents

1.0 INTRODUCTION 1

2.0 GEOLOGIC SETTING 1

3.0 SUBSURFACE INVESTIGATION 2

4.0 LABORATORY TESTING 2

5.0 SUBSURFACE CONDITIONS 2

5.1 FILL MATERIAL 3
5.2 GLACIAL TILL 3
5.3 BEDROCK 3
5.4 GROUNDWATER 4

6.0 FOUNDATION ALTERNATIVES 4

7.0 GEOTECHNICAL DESIGN RECOMMENDATIONS 5

7.1 PRECAST CONCRETE BOX CULVERT DESIGN AND CONSTRUCTION 5
7.1.1 PRECAST CONCRETE BOX CULVERT HEADWALLS 5
7.1.2 PRECAST CONCRETE OUTLET WALLS 6
7.1.3 PRECAST CONCRETE INLET AND OUTLET TOE WALLS 6
7.1.4 BEARING RESISTANCE 6
7.2 PRECAST CONCRETE MODULAR GRAVITY WALL 7
7.3 SETTLEMENT 7
7.4 FROST PROTECTION 8
7.5 SCOUR AND RIPRAP 8
7.6 SEISMIC DESIGN CONSIDERATIONS 8
7.7 CONSTRUCTION CONSIDERATIONS 9

8.0 CLOSURE 9

Tables

Table 1 – Summary of Approximate Bedrock Core Depths, Elevations, and RQD

Figures

Figure 1 - Factored Bearing Resistance for PCMG Walls

Sheets

Sheet 1 – Location Map
Sheet 2 – Boring Location Plan
Sheet 3 – Interpretive Subsurface Profile
Sheet 4 – Boring Logs

Appendices

Appendix A – Boring Logs
Appendix B – Laboratory Test Results
Appendix C – Calculations

1.0 INTRODUCTION

The purpose of this Geotechnical Design Report is to present subsurface information and provide geotechnical design recommendations for the replacement of Hancock Bridge which carries Embden Pond Road over Hancock Brook in Embden, Maine. This report presents the subsurface information obtained at the site during the subsurface investigation, geotechnical recommendations for the new box culvert construction, and geotechnical design parameters.

The existing structure consists of a concrete slab bridge supported by mass concrete abutments founded on spread footings on soil. The bridge has a span of approximately 20 feet and a 39-degree skew. According to the 2016 Maine Department of Transportation (MaineDOT) Bridge Inspection Report, the abutments are in fair condition with notable rotation evidenced by horizontal and vertical cracking. The deck and superstructure are in poor condition with advanced deterioration evidenced by cracking and active efflorescence leakage.

The proposed replacement structure will be a 26-foot span by 9-foot rise, 74-foot long, precast concrete box culvert. The box culvert shall have precast headwalls retaining slopes over the culvert and toe walls extending one foot below calculated scour depth. The upstream end of the culvert shall attach to precast retaining walls supporting the roadway. The downstream end of the culvert shall have slope-tapered outlet walls to match the sideslopes. The box culvert invert will be embedded 2 feet into the streambed and 2 feet of special fill will be placed inside the bottom of the culvert to create a natural streambed. The box shall be placed on a 1-foot-thick leveling layer of Granular Borrow – Material for Underwater Backfill bearing on compacted native soils.

The new box culvert will be located on nearly the same horizontal alignment as the existing bridge. The finished grade over the proposed precast box culvert will closely match the existing. Staged construction techniques and a 10-foot wide lane on a special detour will allow alternating one-way traffic through the project during construction.

2.0 GEOLOGIC SETTING

The existing structure carries Embden Pond Road over Hancock Stream as shown on Sheet 1 – Location Map.

The Maine Geological Survey (MGS) Surficial Geology Map of the Anson Quadrangle, Maine, Open-file No. 86-28 (1986), indicates the surficial soils in the vicinity of the bridge project consist of glacial till deposits. Glacial till is a heterogeneous mixture of sand, silt, clay and stones. Glacial till includes two varieties; basil till and ablation till. Basal till is typically fine grained and very compact with low permeability and poor drainage. Ablation till is typically loose, sandy, and stony with moderate permeability and fair to good drainage. These soils generally overly bedrock, but may overlie, or include, sand and gravel.

The MGS Bedrock Geologic Map of the Anson Quadrangle, Maine, Map Series GM-7 (1979), cites the bedrock at the project site as layered metasandstone, metapelite, and metasiltstone of the Madrid Formation.

3.0 SUBSURFACE INVESTIGATION

Two test borings explored subsurface conditions at the project location. Boring BB-EHB-101 was drilled south of the existing structure. Boring BB-EHB-102 was drilled north of the existing structure. The boring locations are shown on Sheet 2 – Boring Location Plan.

The MaineDOT Drill Crew drilled the test borings on August 7 and 8, 2017. Details and sampling methods used, field data obtained, and soil and groundwater conditions encountered are presented in the boring logs provided in Appendix A – Boring Logs and on Sheet 4 – Boring Logs.

Borings were performed by using a combination of solid stem auger, cased wash boring, and rock coring techniques. Soil samples were typically obtained in at 5-foot intervals using Standard Penetration Test (SPT) methods. During SPT sampling, the sampler is driven 24 inches and the hammer blows for each 6-inch interval of penetration are recorded. The sum of the blows for the second and third intervals is the N-value, or standard penetration resistance. The MaineDOT dill rig is equipped with an automatic hammer to drive the split spoon. The hammer was calibrated per ASTM D4633 "Standard Test Method for Energy Measurement for Dynamic Penetrometers" in April 2017. All N-values discussed in this report are corrected values computed by applying an average energy transfer of 0.854 to the raw field N-values. This hammer efficiency factor (0.854) and both the raw field N-value and corrected N-value (N_{60}) are shown on the boring logs.

Bedrock was cored in test boring BB-EHB-102 using an NQ-2" core barrel and the Rock Quality Designation (RQD) of the core calculated. The MaineDOT geotechnical engineer logged the subsurface conditions, selected the boring location and drilling methods, designated type and depth of sampling techniques, reviewed boring logs and identified field-testing requirements. The borings were located in the field using taped measurements at the completion of the drilling program.

4.0 LABORATORY TESTING

A laboratory testing program was conducted on selected soil samples recovered from the test borings to assist in soil classification, evaluation of engineering properties of the soils, and geologic assessment of the project site. Laboratory testing consisted of five standard grain size analyses with natural water content and one grain size analysis with hydrometer and natural moisture content. The results of soil tests are included as Appendix B – Laboratory Test Results. Moisture content information and other soil test results are also shown on the boring logs provided in Appendix A – Boring Logs and on Sheet 4 – Boring Logs.

5.0 SUBSURFACE CONDITIONS

Subsurface conditions encountered in the test borings generally consisted of Fill and Glacial Till underlain by metasedimentary bedrock. The boring logs are provided in Appendix A – Boring Logs and on Sheet 4 – Boring Logs. A generalized subsurface profile is shown on Sheet 3 – Interpretive Subsurface Profile. The following paragraphs summarize the subsurface conditions

encountered:

5.1 Fill Material

A fill unit was encountered in the test borings. The thickness of the fill unit encountered was approximately 14.7 to 16.1 feet. The unit generally consisted of:

- brown, moist, gravelly sand, little silt;
- brown, moist, sand, little silt, trace gravel;
- brown, moist to wet, medium to fine sand, little silt, little to trace gravel;
- brown-grey, wet, coarse sand, some gravel, some silt, trace clay; and
- cobbles.

Corrected SPT N-values in the fill unit ranged from 4 to 60 blows per foot (bpf), indicating the fill is very loose to very dense in consistency. Three grain size analyses of the fill material resulted in the soil being classified as A-1-b and A-2-4 under the AASHTO Soil Classification System and SW-SM, SP-SM, and SC-SM under the Unified Soil Classification System (USCS). The natural water content of the samples tested ranged from approximately 5 to 21 percent.

5.2 Glacial Till

Glacial till was encountered beneath the fill material in borings BB-EHB-101 and BB-EHB-102. The thickness of the layer encountered in BB-EHB-102 was approximately 27.1 feet. Boring BB-EHB-101 was terminated within the glacial till layer at approximately 20.5 feet into the till deposit. The deposit generally consisted of:

- grey, wet, fine sand, some silt, some to little gravel;
- grey, wet, fine to coarse sand, some silt, some gravel;
- grey, wet, silt, some gravel, little sand;
- grey, wet, silty sand, some to trace gravel;
- boulders; and
- cobbles.

Corrected SPT N-values in the glacial till deposit ranged from 34 to practical refusal indicating the glacial till is dense to very dense or hard in consistency. Three grain size analyses conducted on samples from the glacial till deposit resulted in the samples being classified as A-2-4 and A-4 under the AASHTO Soil Classification System and SM under the USCS. The moisture content of the tested samples ranged from approximately 7 to 11 percent.

5.3 Bedrock

Bedrock was encountered and cored in boring BB-EHB-102. Table 1 summarizes approximate depths to the bedrock core, corresponding approximate top of the bedrock core run, and RQD.

Boring	Station	Offset (feet)	Approximate Depth to Core (feet bgs)	Approximate Elevation of Top of Core (feet)	RQD (Core Run, %)
BB-EHB-102	10+73.3	7.5 Lt	43.6	382.8	R3, 24

Table 1 – Summary of Approximate Bedrock Core Depths, Elevations, and RQD

The bedrock recovered from BB-EHB-102 is identified as grey, fine grained, metasandstone, hard, very slight weathering, low to steep angle joints, very close to close, open to healed with calcite. The RQD of the bedrock core was 24 percent correlating to a rock mass quality of very poor. A detailed bedrock description and the RQD are provided on the boring logs in Appendix A – Boring Logs and on Sheet 4 – Boring Logs.

5.4 Groundwater

A groundwater measurement performed at the completion of boring BB-EHB-101 indicated the groundwater was approximately 7.0 feet below the roadway surface (brs). The groundwater observation is provided on the boring log in Appendix A – Boring Logs and on Sheet 4 – Boring Logs. Note that because water was introduced into the borehole during drilling operations, the groundwater measurements may not represent stabilized groundwater conditions. Groundwater levels will fluctuate with seasonal changes, precipitation, runoff, river levels, and construction activities.

6.0 FOUNDATION ALTERNATIVES

Because bridge rehabilitation would not effectively correct the deficiencies of the existing structure, only replacement alternatives were evaluated. The alternatives were;

- a rigid concrete frame supported by piles,
- voided concrete slabs supported by spread footings,
- a steel superstructure with integral abutments,
- precast concrete next beams with integral abutments, and
- a precast concrete box culvert.

All alternatives achieved the project environmental goals and hydraulic analyses found all alternatives to perform similarly; therefore, cost and ease of construction were the critical selection criteria. The precast concrete box culvert is the preferred alternative because the alternative has a lower design cost, projected lower maintenance cost, and structures of this type typically have a longer service life. The replacement box culvert will be 74 feet long and have a 26-foot span with a 9-foot rise. The box culvert shall have precast headwalls retaining slopes over the culvert and toe walls extending one foot below calculated scour depth. The upstream end of the culvert shall attach to precast retaining walls supporting the roadway. The downstream end of the culvert shall have outlet walls sloped to match the sideslopes. The box culvert invert will be embedded 2 feet into the streambed and 2 feet of special fill will be placed

inside the bottom of the culvert to create a natural streambed.

7.0 GEOTECHNICAL DESIGN RECOMMENDATIONS

7.1 Precast Concrete Box Culvert Design and Construction

The proposed replacement structure will consist of a 74-foot-long precast concrete box culvert with slope tapered outlet walls and precast concrete walls at the inlet. The box culvert will have precast headwalls that are sloped to meet the roadway grade. To prevent undermining, the box culvert will have inlet and outlet toe walls and riprap aprons. The bottom slab of the box culvert will be embedded approximately 2 feet into the streambed and 2 feet of engineered streambed material will be placed inside the culvert to create a natural streambed. The riprap apron should be embedded 6 inches into the streambed and covered with the engineered streambed material to provide continuity of the natural streambed.

Precast concrete box culverts are typically supplier-designed and are detailed on the contract plans with only basic layout and required hydraulic opening. The manufacturer selected by the Contractor is responsible for the design of the structure including determination of wall thickness, haunch thickness, and reinforcement. The box culvert shall be designed in accordance with MaineDOT Standard Specification 534 – Precast Structural Concrete, MaineDOT Bridge Design Guide (BDG) Section 8 – Buried Structures, and American Association of State Highway and Transportation Officials (AASHTO) Load Resistance and Factor Design Bridge Design Specifications, 8th Edition, 2017 with up to 2018 interims (LRFD).

The loading specified for the structure should be Modified HL-93 Strength I in which the HS-20 design truck wheel loads are increased by a factor of 1.25. The precast concrete box culvert shall be designed for all relevant strength and service limit states and load combinations specified in LRFD Article 3.4.1 and LRFD Section 12. The design should use Soil Type 4 as presented in the MaineDOT BDG Section 3.6 to design earth loads from the soil envelope. The backfill properties are as follows: ϕ=32°, γ = 125 pcf. For vertical earth pressure, the maximum load factor for at rest earth pressure from LRFD Table 3.4.1-2 shall apply and wheel loads should be distributed through earth fills according to the provisions of LRFD Article 3.6.1.2.6.

The box culvert will be bedded on a 1-foot-thick leveling layer of Granular Borrow – Material for Underwater Backfill conforming to Standard Specification 703.19. The soil envelope and backfill shall consist of Standard Specification 703.19 – Granular Borrow Material for Underwater Backfill with a maximum particle size of 4 inches. The granular borrow backfill should be placed in lifts of 6 to 8 inches thick loose measure and compacted to the manufacturer's specifications. In no case shall the backfill soil be compacted less than 92 percent of the AASHTO T-180 maximum dry density. The precast concrete box culvert shall be installed in conformance with MaineDOT BDG Section 8 and MaineDOT Standard Specification Section 534.

7.1.1 Precast Concrete Box Culvert Headwalls

Concrete headwalls will be included in the culvert design to retain crushed stone slope protection and prevent stones from dropping or eroding into the waterway. The headwalls will

be slope-tapered to meet the sideslopes. The headwalls are essentially retaining walls and shall be designed for all relevant strength and service limit states and load combinations specified in LRFD Articles 3.4.1, 11.5.5, and 11.6. The headwalls shall be designed to resist lateral earth pressures, vehicular loads, and force effects resulting from creep, temperature, and shrinkage deformations of the concrete box culvert. The headwalls shall be designed considering a live load surcharge equal to a uniform horizontal earth pressure due to an equivalent height of soil (h_{eq}) of 2.0 feet per BDG Article 3.6.8 where traffic is parallel to the wall and located 1 foot back or more.

Headwalls should be designed using the Rankine active earth pressure coefficient, K_a, of 0.46 assuming a 2H:1V backslope. The active earth pressure coefficient will change if the backslope conditions are different. See Appendix C – Calculations for supporting documentation.

7.1.2 Precast Concrete Outlet Walls

The precast concrete box culvert's outlet walls will be slope-tapered to match the sideslopes. The left and right outlet walls will share the same precast base slab. The sloped outlet walls are essentially retaining walls and shall be designed for all relevant strength and service limit states and load combinations specified in LRFD Articles 3.4.1, 11.5.5 and 11.6. The outlet walls shall be designed to resist lateral earth pressures, vehicular loads, and force effects resulting from creep, temperature, and shrinkage deformations of the concrete box culvert. The outlet walls shall be designed considering a live load surcharge equal to a uniform horizontal earth pressure due to an equivalent height of soil (h_{eq}) of 2.0 feet per LRFD Article 3.11.6.4.

Outlet walls that are fixed to the box culvert should be designed to resist movement using an at-rest earth pressure coefficient, K_o, of 0.47. Wingwalls sections that are independent of the box culvert should be designed using the Rankine active earth pressure coefficient, K_a, of 0.46 assuming a 2H:1V backslope. The active earth pressure coefficient will change if the backslope conditions are different. See Appendix C – Calculations for supporting documentation.

7.1.3 Precast Concrete Inlet and Outlet Toe Walls

Toe walls shall extend below the bottom slab connecting the left and right walls at the inlet and outlet of the box culvert to prevent undermining per MaineDOT BDG Section 8.3.1. The inlet and outlet toe walls should extend a minimum of 1 foot below the maximum depth of scour.

7.1.4 Bearing Resistance

The precast concrete box culvert will be bedded on a 1-foot-thick layer of Granular Borrow – Material for Underwater Backfill with a bottom elevation ranging of approximately 413 feet. The coarse-grained fill soils at this elevation are expected to be medium to very dense in consistency. These soils are characterized as having adequate bearing resistance.

For a precast concrete box culvert with a base width of 28 feet, the factored bearing stress at the strength limit state shall not exceed the calculated factored bearing resistance of 22 kips per square foot (ksf). To control settlement, the factored bearing stress at the service limit state shall not exceed a bearing resistance of 5 ksf. The service limit state bearing resistance may

govern the design. In no instance shall bearing stress exceed the nominal structural resistance of the structural concrete which may be taken as 0.3*f'c*. See Appendix C – Calculations for supporting calculations.

7.2 Precast Concrete Modular Gravity Wall

The upstream inlet walls shall be Precast Concrete Modular Gravity (PCMG) walls. The bearing elevation of approximately 413.0 feet is below the Q1.1 elevation; therefore, the wall base units shall be constructed no less than 2 feet below the maximum anticipated scour depth. In general, PCMG wingwalls should only be used in streams where the flow velocities are low, and the potential for scour is low. The PCMG walls shall be designed by a Professional Engineer subcontracted by the Contractor as a design-build item.

The bearing resistance for PCMG walls founded on a 6 by 12-inch leveling slab and embedded for frost and scour shall be investigated at the strength limit state using factored loads and a factored bearing resistance of 9.4 ksf. Based on presumptive bearing resistance values, a factored bearing resistance of 5 ksf may be used to control settlement when analyzing the service limit state (see Appendix C – Calculations for supporting calculations). The vertical stress may be calculated assuming a uniform distribution over the effective footing base as shown in LRFD Figure 11.6.3.2-1.

The PCMG walls shall be designed considering a live load surcharge equal to a uniform horizontal earth pressure due to an equivalent height of soil (h_{eq}) of 2 feet, per LRFD Article 3.11.6.4.

For the lowest PCMG unit on soil the location of the resultant of the reaction forces at the strength limit state should be within the middle one-half (1/2) of the footing width.
Failure by sliding shall be investigated by the wall designer-supplier. A sliding resistance factor, φ_τ, of 0.90 shall be applied to the nominal sliding resistance of precast concrete wall segments founded on soil. A sliding resistance factor of 0.90 shall be applied to the nominal sliding resistance of soil within the precast concrete units on granular bedding soils. Sliding computations for resistance to lateral loads shall assume a maximum frictional coefficient of 0.46 = 0.80 x tan 30° at the foundation soil to concrete unit interfaces and a maximum frictional coefficient of 0.58 = tan 30° at foundation soil to soil-infill interfaces. Recommended values of sliding frictional coefficients are based on LRFD Articles 11.11.4.2 and 10.6.3.4 and Table 10.5.5.2.2-1.

7.3 Settlement

The approximately 15 to 16-foot-thick fill unit encountered at the site is very loose to very dense in consistency. The fill unit at the bearing elevation is medium dense to very dense in consistency. These coarse-grained materials are cohesionless and undergo elastic, immediate, compression in response to an increase of vertical overburden pressure. The proposed vertical alignment will remain the same as the existing vertical alignment. As a result, little to no increase in vertical overburden pressure is expected. Any settlement is anticipated to be small and will occur relatively quickly.

Any soft soils encountered at the foundation elevation for the precast box culvert should be excavated in its entirety and replaced with Granular Borrow – Material for Underwater Backfill. Any cobbles or boulders encountered at the foundation elevation for the precast box culvert should be excavated to 1 foot below the box bearing elevation and replaced with Granular Borrow – Material for Underwater Backfill.With these provisions, post-construction settlement at the location of the replacement structure is anticipated to be minimal.

7.4 Frost Protection

Foundations placed on the native soils should be designed with an appropriate embedment for frost protection. According to MaineDOT BDG Figure 5-1, Maine Design Freezing Index Map, Embden has a design freezing index (DFI) of approximately 1900 F-degree days. A water content of 10% was used for coarse-grained soils. These components correlate to a frost depth of 7.7 feet. A similar analysis was performed using Modberg software by the US Army Cold Regions Research and Engineering Laboratory (CRREL). For the Modberg analysis, Farmington, Maine was used because Farmington lies near the 1900 F-degree isoline of Embden and the Modberg database does not contain Embden. Farmington has an air DFI from the Modberg database of approximately 2023 F-degree days. A water content of 10% was used. These components correlate to a frost depth of approximately 7.7 feet.

Based on the MaineDOT BDG methodology it is recommended that foundations bearing on coarse-grained soils be designed with an embedment of approximately 7.7 feet for frost protection. See Appendix C – Calculations for supporting calculations.

Riprap is not to be considered as contributing to the overall thickness of soils required for frost protection.

7.5 Scour and Riprap

The box culvert shall be constructed with integral concrete headwalls and wingwalls to retain stone slopes and prevent stone slope protection from dropping or eroding into the waterway. Inlet and outlet toe walls shall be provided that extend a minimum of 1-foot below the maximum depth of scour. Inlet and outlet toe walls shall also be protected with riprap aprons.

Where required, slopes shall be armored with a 3-foot thick layer of riprap conforming to MaineDOT Standard Specification 703.26 - Plain and Hand Laid Riprap. The riprap shall be underlain by a Class 1 erosion control geotextile and a 1-foot layer of bedding material conforming to MaineDOT Standard Specification 703.19 Granular Borrow Material for Underwater Backfill. The toe of the riprap sections shall be constructed 1-foot below the streambed elevation. The riprap slopes shall be constructed no steeper than a maximum 1.75H:1V extending from the edge of the roadway down to the existing ground surface. Riprap aprons will be installed at both ends of the culvert.

7.6 Seismic Design Considerations

In conformance with LRFD Article 3.10.1, seismic analysis is not required for buried structures, except where they cross active faults. There are no known active faults in Maine;

therefore, seismic analysis is not required.

7.7 Construction Considerations

The soil envelope and backfill for the box culvert shall consist of Standard Specification 703.19 – Granular Borrow Material for Underwater Backfill with a maximum particle size of 4 inches. The granular borrow backfill should be placed in lifts of 6- to 8-inches-thick loose measure and compacted to the manufacturer's specifications. To minimize future settlements, the envelope and backfill soil shall be compacted to no less than 92 percent of the AASHTO T-180 maximum dry density.

The proposed box culvert will be bedded on a 1-foot-thick layer of Granular Borrow – Material for Underwater Backfill, conforming to Standard Specification 703.19. Based on the soils encountered in the borings, medium dense to very dense, coarse-grained material will be present at the bearing elevations.

The Contractor shall minimize disturbance to the subgrade surface and protect the subgrade surface from any unnecessary construction traffic. Any cobbles or boulders encountered at the bearing elevation shall be removed and replaced with compacted Granular Borrow – Material for Underwater Backfill.

Earthwork and excavations may result in the exposure of silt or other soft soils. These soils may be susceptible to disturbance and rutting as a result of exposure to water or construction traffic. If disturbance and rutting occur, the Contractor shall remove and replace the disturbed materials with compacted Granular Borrow – Material for Underwater Backfill.

Soils may become saturated and water seepage may be encountered during construction and in excavations. There may be localized sloughing and instability in some excavations and cut slopes. The Contractor should control groundwater and surface water infiltration using temporary ditches, sump pumps, granular drainage blankets, stone ditch protection, or hand-laid riprap with geotextile underlayment to divert groundwater and surface water.

8.0 CLOSURE

This report has been prepared for the use of the MaineDOT Bridge Program for specific application to the proposed replacement of Hancock Bridge on Embden Pond Road in Embden, Maine in accordance with generally accepted geotechnical and foundation engineering practices. No other intended use or warranty is expressed or implied.

In the event that any changes in the nature, design, or location of the proposed project are planned, this report should be reviewed by a geotechnical engineer to assess the appropriateness of the conclusions and recommendations and to modify the recommendations as appropriate to reflect the changes in design. Further, the analyses and recommendations are based in part upon limited soil explorations at discrete locations completed at the site. If variations from the conditions encountered during the investigation appear evident during construction, it may also become necessary to re-evaluate the recommendations made in this report.

It is also recommended that the geotechnical engineer be provided the opportunity for a general review of the final design and specifications so that the earthwork and foundation recommendations may be properly interpreted and implemented in the design.

Sheets

Date:1/22/2018

Division: GEOTECH

Username: Terry.White

EMBDEN, MAINE

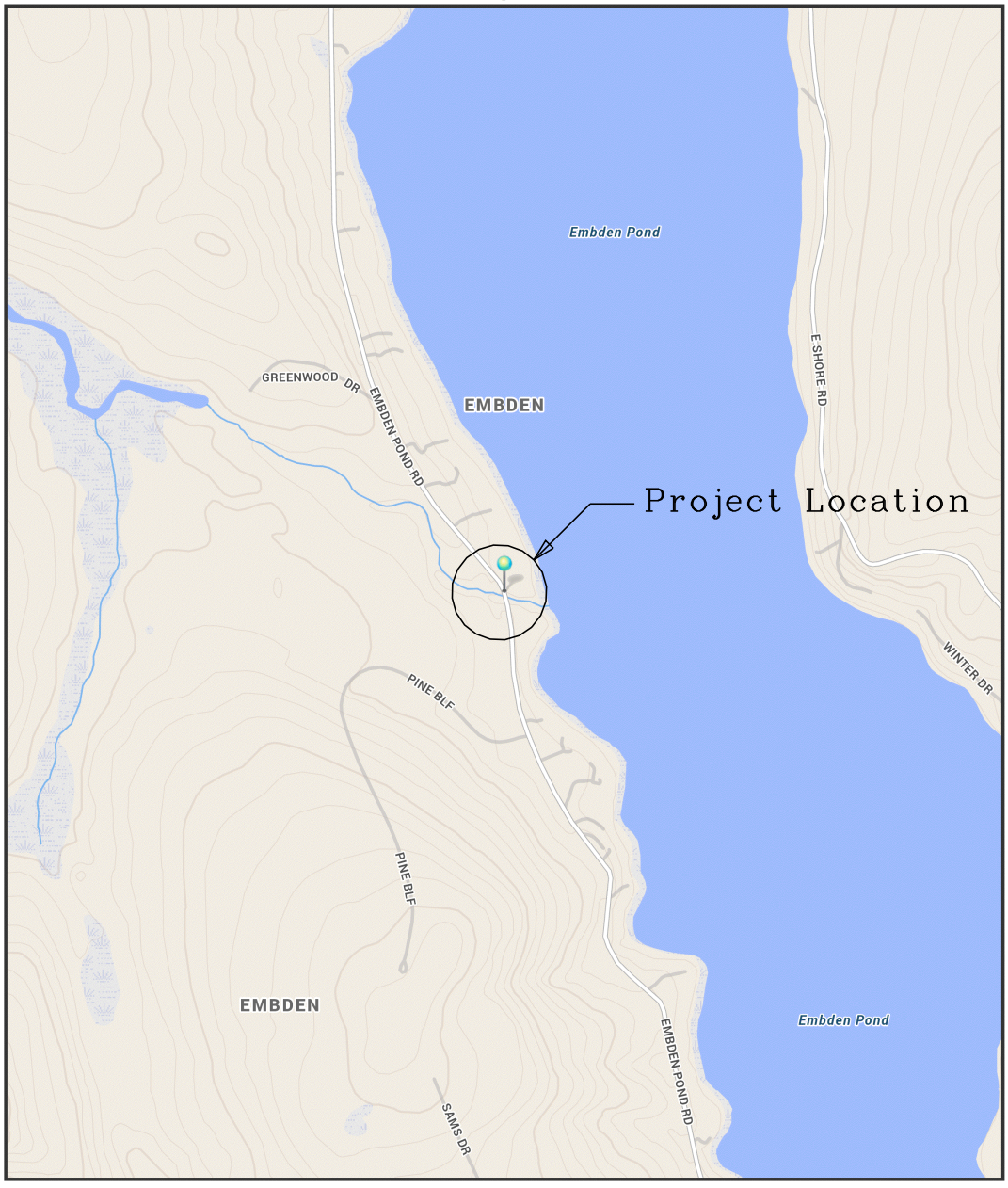

The Maine Department of Transportation provides this publication for information only. Reliance upon this information is at user risk. It is subject to revision and may be incomplete depending upon changing conditions. The Department assumes no liability if injuries or damages result from this information. This map is not intended to support emergency dispatch.

0.25 Miles

1 inch = 0.28 miles

Date: 1/22/2018
Time: 7:06:15 AM

SHEET NUMBER		
1	HANCOCK BRIDGE HANCOCK BROOK	STATE OF MAINE DEPARTMENT OF TRANSPORTATION
	EMBDEN SOMERSET COUNTY	STP-2168(900)
OF 4	LOCATION MAP	WIN BRIDGE NO. 3372 21689.00 BRIDGE PLANS

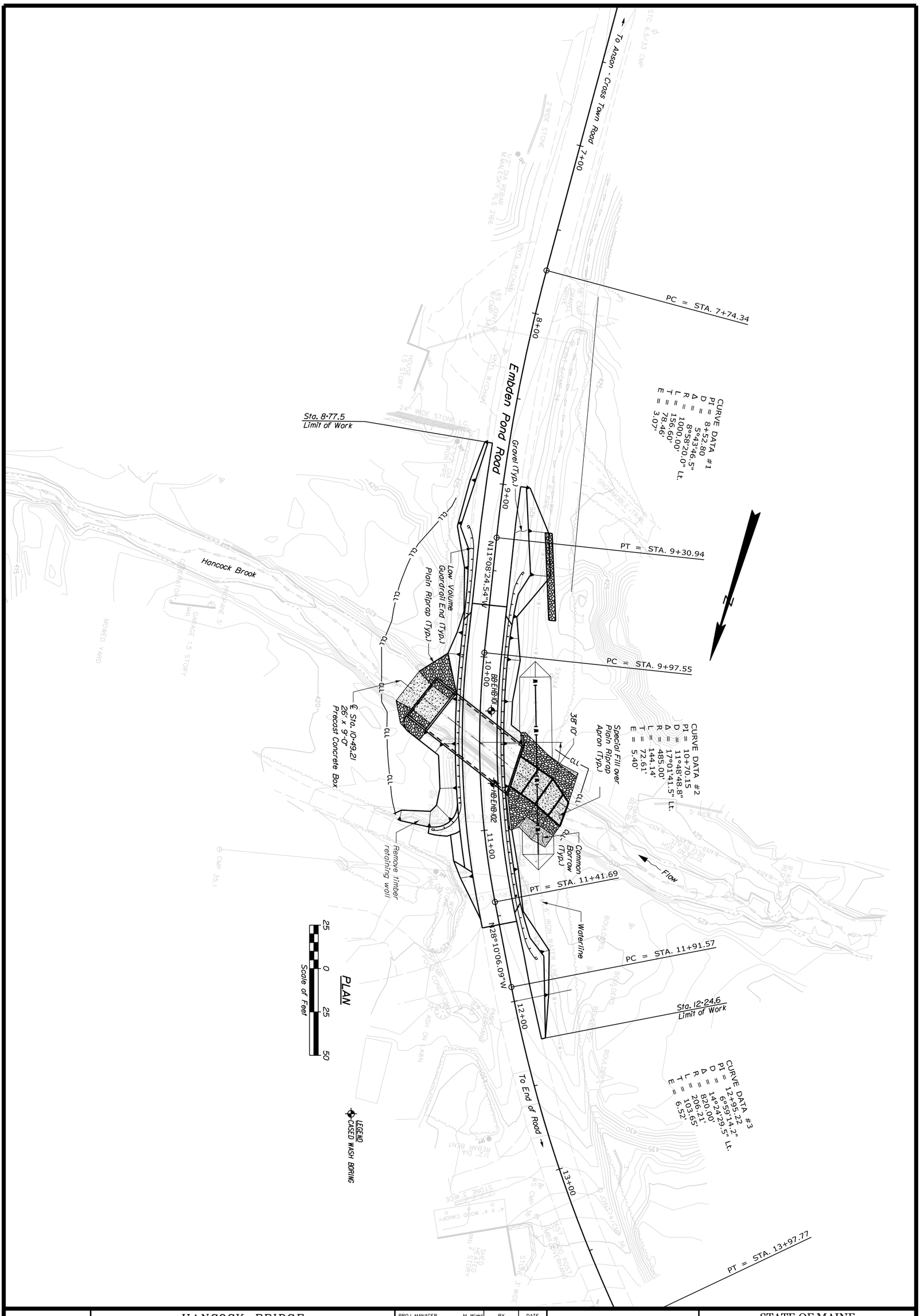

PROJ. MANAGER	M. Wight	BY	DATE	
DESIGN-DETAILED	J. Hasbrouck	A. Paradis		
CHECKED-REVIEWED	-----	-----	-----	SIGNATURE
DESIGN2-DETAILED2	B.SLAVEN	T.WHITE	AUG. 2017	
DESIGN3-DETAILED3	------	------	------	P.E. NUMBER
REVISIONS 1	------		------	
REVISIONS 2	------		------	
REVISIONS 3	------		------	DATE
REVISIONS 4	------		------	
FIELD CHANGES	------		------	

HANCOCK BRIDGE
HANCOCK BROOK
EMBDEN SOMERSET COUNTY

BORING LOCATION PLAN

SHEET NUMBER 2 OF 4

STATE OF MAINE
DEPARTMENT OF TRANSPORTATION

STP-2168(900)

BRIDGE NO. 3372 WIN 21689.00 BRIDGE PLANS

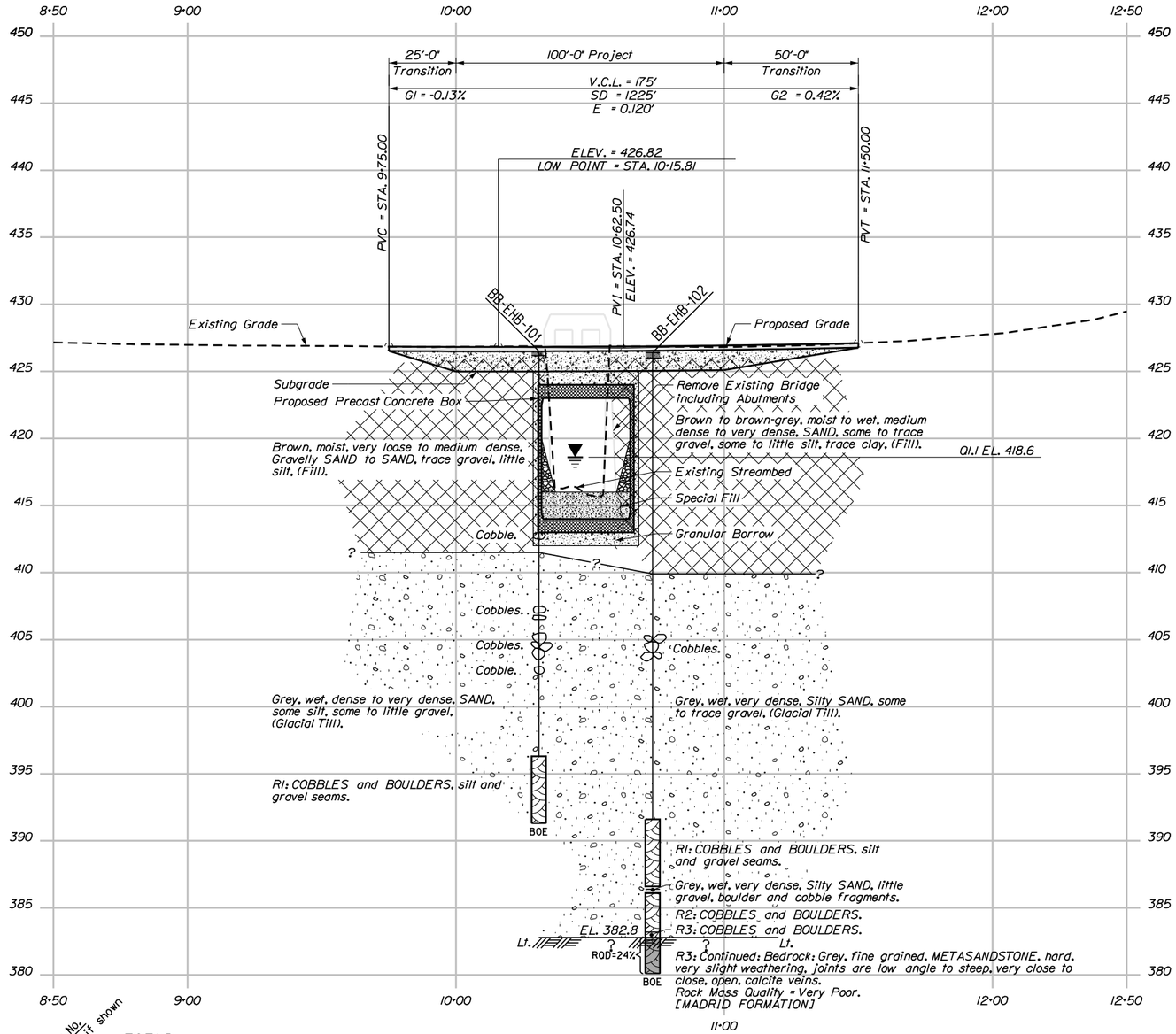

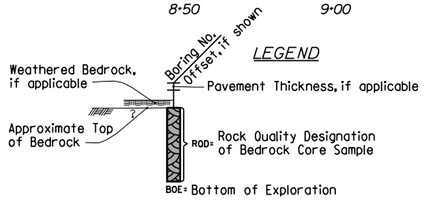

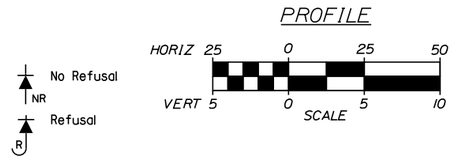

Note: This generalized interpretive soil profile is intended to convey trends in subsurface conditions. The boundaries between strata are approximate and idealized, and have been developed by interpretations of widely spaced explorations and samples. Actual soil and bedrock transitions may vary and are probably more erratic. For more specific information refer to the exploration logs.

STATE OF MAINE
DEPARTMENT OF TRANSPORTATION

STP-2168(900)

WIN 21689.00

BRIDGE NO. 3372

BRIDGE PLANS

PROJ. MANAGER	M. Wigel	BY	DATE
DESIGN-DETAILED	J. Hasbrouck	A. Paradis	
CHECKED-REVIEWED	----	----	----
DESIGN2-DETAILED2	B.SLAVEN	T. WHITE	AUG. 2017
DESIGN3-DETAILED3	----	----	----
REVISIONS 1	----	----	----
REVISIONS 2	----	----	----
REVISIONS 3	----	----	----
REVISIONS 4	----	----	----
FIELD CHANGES	----	----	----

SIGNATURE

P.E. NUMBER

DATE

HANCOCK BRIDGE
HANCOCK BROOK
EMBDEN SOMERSET COUNTY

INTERPRETIVE SUBSURFACE PROFILE

SHEET NUMBER

3

OF 4

Filename: ...\00\GEOTECH\MSTA\006_ISP1.dgn Division: GEOTECH Username: Brandon.Slaven Date:11/19/2018

Filename: ...\msta\007_BORING LOGS1.dgn Division: GEOTECH Username: Terry.White Date:11/20/2018

Maine Department of Transportation

Soil/Rock Exploration Log

US CUSTOMARY UNITS

Project: Hancock Bridge #3372 carries Embden Pond Road over Hancock
Location: Embden, Maine

Boring No.: BB-EHB-101

WIN: 21689.00

Driller:	MaineDOT	Elevation (ft.)	426.5	Auger ID/OD:	5" Solid Stem
Operator:	Daggett/Maynard	Datum:	NAVD88	Sampler:	Standard Split Spoon
Logged By:	B. Slaven	Rig Type:	CME 45C	Hammer Wt./Fall:	140#/30"
Date Start/Finish:	8/7/2017; 08:30-12:30	Drilling Method:	Cased Wash Boring	Core Barrel:	NQ-2"
Boring Location:	10+30.9, 6.4 ft Lt.	Casing ID/OD:	NW-3"	Water Level*:	7.0 ft bgs.
Hammer Efficiency Factor: 0.854		Hammer Type:	Automatic ☒ Hydraulic ☐ Rope & Cathead ☐		

Definitions:
D = Split Spoon Sample
MD = Unsuccessful Split Spoon Sample Attempt
U = Thin Wall Tube Sample
MU = Unsuccessful Thin Wall Tube Sample Attempt
V = Field Vane Shear Test, PP = Pocket Penetrometer
WOR/C = Weight of Rods or Casing
WH = Weight of Hammer
R = Rock Core Sample
SSA = Solid Stem Auger
HSA = Hollow Stem Auger
RC = Roller Cone
WOH = Weight of 140lb. Hammer
S_u = Peak/Remolded Field Vane Undrained Shear Strength (psf)
S_u(lab) = Lab Vane Undrained Shear Strength (psf)
q_p = Unconfined Compressive Strength (ksf)
N-uncorrected = Raw Field SPT N-value
Hammer Efficiency Factor = Rig Specific Annual Calibration Value
N_{60} = SPT N-uncorrected Corrected for Hammer Efficiency
N_{60} = (Hammer Efficiency Factor/60%)*N-uncorrected
T_v = Pocket Torvane Shear Strength (psf)
WC = Water Content, percent
LL = Liquid Limit
PL = Plastic Limit
PI = Plasticity Index
G = Grain Size Analysis
C = Consolidation Test

Depth (ft.)	Sample No.	Pen./Rec. (in.)	Sample Depth (ft.)	Blows (/6 in.) Shear Strength (psf) or RQD (%)	N-uncorrected	N_{60}	Casing Blows	Elevation (ft.)	Visual Description and Remarks	Laboratory Testing Results/ AASHTO and Unified Class
0							SSA	426.2	4" HMA. (0.3)	
5	1D	24/8	5.00 - 7.00	4/6/9/7	15	21			Brown, moist, medium dense, Gravelly SAND, little silt, (Fill).	G#270335 A-1-b, SW-SM WC=5.4%
10	2D	24/1	10.00 - 12.00	1/1/2/2	3	4	SPLIT CASE		Brown, moist, very loose, SAND, little silt, trace gravel, (Fill).	
									Cobble from 13.5-14.0 ft bgs.	
15	3D	24/8	15.00 - 17.00	16/11/13/9	24	34		411.5	Grey, wet, dense, fine SAND, some silt, some gravel. (15.0)	G#270336 A-2-4, SM WC=11.2%
									Cobble from 19.0-19.5 ft bgs.	
									Cobble from 19.7-20.0 ft bgs.	
20	4D	16.8/3	20.00 - 21.40	19/32/50(4.8")	---				Grey, wet, very dense, fine SAND, some silt, little gravel. Cobbles from 21.0-23.0 ft bgs.	
									Cobble from 23.5-24.0 ft bgs.	
25	5D	24/13	25.00 - 27.00	10/15/16/21	31	44			Grey, wet, dense, fine to coarse SAND, some silt, some gravel, (Glacial Till).	G#270337 A-2-4, SM WC=7.4%
30	6D	2.4/1	30.00 - 30.20	50(2.4")	---		NQ-2	396.3	Grey, wet, SILT, some gravel, little sand, (Glacial Till). (30.2)	
	R1	60/29	30.20 - 35.20						R1: Cobbles and Boulders, silt and gravel seams. R1: Core Times (min:sec) 30.2-31.2 ft (1:12) 31.2-32.2 ft (0:38) 32.2-33.2 ft (1:29) 33.2-34.2 ft (1:15) 34.2-35.2 ft (1:10) 33% Recovery Slight Artesian Pressure after coring. Core Barrel would not reset, shoe broke, hole abandoned. (35.2)	
35								391.3	Bottom of Exploration at 35.2 feet below ground surface.	
40										
45										
50										

Remarks:

Stratification lines represent approximate boundaries between soil types; transitions may be gradual.

* Water level readings have been made at times and under conditions stated. Groundwater fluctuations may occur due to conditions other than those present at the time measurements were made.

Page 1 of 1

Boring No.: BB-EHB-101

Maine Department of Transportation

Soil/Rock Exploration Log

US CUSTOMARY UNITS

Project: Hancock Bridge #3372 carries Embden Pond Road over Hancock
Location: Embden, Maine

Boring No.: BB-EHB-102

WIN: 21689.00

Driller:	MaineDOT	Elevation (ft.)	426.4	Auger ID/OD:	5" Solid Stem
Operator:	Daggett/Maynard	Datum:	NAVD88	Sampler:	Standard Split Spoon
Logged By:	B. Slaven	Rig Type:	CME 45C	Hammer Wt./Fall:	140#/30"
Date Start/Finish:	8/7/2017-8/8/2017	Drilling Method:	Cased Wash Boring	Core Barrel:	NQ-2"
Boring Location:	10+73.3, 7.5 ft Lt.	Casing ID/OD:	NW-3"	Water Level*:	None Observed
Hammer Efficiency Factor: 0.854		Hammer Type:	Automatic ☒ Hydraulic ☐ Rope & Cathead ☐		

Definitions:
D = Split Spoon Sample
MD = Unsuccessful Split Spoon Sample Attempt
U = Thin Wall Tube Sample
MU = Unsuccessful Thin Wall Tube Sample Attempt
V = Field Vane Shear Test, PP = Pocket Penetrometer
WOR/C = Weight of Rods or Casing
WH = Weight of Hammer
R = Rock Core Sample
SSA = Solid Stem Auger
HSA = Hollow Stem Auger
RC = Roller Cone
WOH = Weight of 140lb. Hammer
S_u = Peak/Remolded Field Vane Undrained Shear Strength (psf)
S_u(lab) = Lab Vane Undrained Shear Strength (psf)
q_p = Unconfined Compressive Strength (ksf)
N-uncorrected = Raw Field SPT N-value
Hammer Efficiency Factor = Rig Specific Annual Calibration Value
N_{60} = SPT N-uncorrected Corrected for Hammer Efficiency
N_{60} = (Hammer Efficiency Factor/60%)*N-uncorrected
T_v = Pocket Torvane Shear Strength (psf)
WC = Water Content, percent
LL = Liquid Limit
PL = Plastic Limit
PI = Plasticity Index
G = Grain Size Analysis
C = Consolidation Test

Depth (ft.)	Sample No.	Pen./Rec. (in.)	Sample Depth (ft.)	Blows (/6 in.) Shear Strength (psf) or RQD (%)	N-uncorrected	N_{60}	Casing Blows	Elevation (ft.)	Visual Description and Remarks	Laboratory Testing Results/ AASHTO and Unified Class
0							SSA	426.0	5" HMA, void under pavement. (0.4)	
5	1D	24/8	5.00 - 7.00	8/10/6/9	16	23	SPLIT CASE		Brown, moist, medium dense, medium to fine SAND, little gravel, little silt, (Fill).	
10	2D	24/1	10.00 - 12.00	5/7/6/6	13	19			Brown, wet, medium dense, medium to fine SAND, little silt, trace gravel, (Fill).	G#270338 A-2-4, SP-SM WC=21.1%
15	3D	24/7	15.00 - 17.00	23/27/15/11	42	60			Brown-grey, wet, very dense, coarse SAND, some gravel, some silt, trace clay, (Fill). (16.5)	G#270339 A-2-4, SC-SM WC=9.0%
								409.9	SILT in Spoon Tip.	
20	4D	4.8/1	20.00 - 20.40	50(4.8")	---				Grey, wet, very dense, coarse GRAVEL in Spoon Tip. Cobbles from 21.0-23.0 ft bgs.	
25	5D	3.6/1	25.00 - 25.30	30(3.6")	---				Grey, wet, very dense, Silty SAND, trace gravel, (Glacial Till).	G#270340 A-4, SM WC=7.9%
30	6D	4.8/1	30.00 - 30.40	50(4.8")	---				Grey, wet, very dense, Silty SAND, some gravel, (Glacial Till).	
	R1	60/20	34.80 - 39.80				NQ-2	391.6	(34.8) R1: Cobbles and Boulders, seams of silt and rounded gravel. R1: Core Times (min:sec) 34.8-35.8 ft (0:35) 35.8-36.8 ft (0:19) 36.8-37.8 ft (0:37) 37.8-38.8 ft (0:48) 38.8-39.8 ft (1:04) 33% Recovery	
40	7D R2	3.6/1 34.8/17	40.00 - 40.30 40.30 - 43.20	50(3.6")	---		NQ-2	386.4 386.1	(40.0) Grey, wet, very dense, Silty SAND, little gravel, boulder and cobble fragments. (40.3) R2: Cobbles and Boulders. R2: Core Times (min:sec) 40.3-41.3 ft (0:32) 41.3-42.3 ft (1:17) 42.3-43.2 ft (3:50) 48% Recovery R3: Cobbles and Boulders to 43.6 ft bgs. R3: Core Times (min:sec) 43.2-44.2 ft (3:30)	
	R3	37.2/37.2	43.20 - 46.30	RQD = 24%				382.8	(43.6) Top of Bedrock at Elev. 382.8 ft. R3:Continued: Bedrock: Grey, fine grained, METASANDSTONE, hard, very slight weathering, joints are low angle to steep, very close to close, open, calcite veins. Rock Mass Quality = Very Poor. [NADRID FORMATION] 44.2-45.2 ft (1:16) 45.2-46.3 ft (1:20) 100% Recovery	
45								380.1	(46.3) Bottom of Exploration at 46.3 feet below ground surface.	
50										

Remarks:

-Overhead trees dictated Boring location-

Stratification lines represent approximate boundaries between soil types; transitions may be gradual.

* Water level readings have been made at times and under conditions stated. Groundwater fluctuations may occur due to conditions other than those present at the time measurements were made.

Page 1 of 1

Boring No.: BB-EHB-102

STATE OF MAINE
DEPARTMENT OF TRANSPORTATION

STP-2168(900)

WIN 21689.00

BRIDGE NO. 3372

BRIDGE PLANS

PROJ. MANAGER	M. Wagner	BY	DATE
DESIGN-DETAILED	J. Hasbrouck	A. Paradis	
CHECKED-REVIEWED			SIGNATURE
DESIGN2-DETAILED2	B.SLAVEN	T.WHITE	NOV 2018
DESIGN3-DETAILED3			P.E. NUMBER
REVISIONS 1			
REVISIONS 2			DATE
REVISIONS 3			
REVISIONS 4			
FIELD CHANGES			

HANCOCK BRIDGE
HANCOCK BROOK
EMBDEN SOMERSET COUNTY

BORING LOGS

SHEET NUMBER

4

OF 4

Appendix A

Boring Logs

UNIFIED SOIL CLASSIFICATION SYSTEM

MAJOR DIVISIONS			GROUP SYMBOLS	TYPICAL NAMES
COARSE-GRAINED SOILS (more than half of material is larger than No. 200 sieve size)	GRAVELS (more than half of coarse fraction is larger than No. 4 sieve size)	CLEAN GRAVELS (little or no fines)	GW	Well-graded gravels, gravel-sand mixtures, little or no fines.
			GP	Poorly-graded gravels, gravel sand mixtures, little or no fines.
		GRAVEL WITH FINES (Appreciable amount of fines)	GM	Silty gravels, gravel-sand-silt mixtures.
			GC	Clayey gravels, gravel-sand-clay mixtures.
	SANDS (more than half of coarse fraction is smaller than No. 4 sieve size)	CLEAN SANDS (little or no fines)	SW	Well-graded sands, gravelly sands, little or no fines
			SP	Poorly-graded sands, gravelly sand, little or no fines.
		SANDS WITH FINES (Appreciable amount of fines)	SM	Silty sands, sand-silt mixtures
			SC	Clayey sands, sand-clay mixtures.
FINE-GRAINED SOILS (more than half of material is smaller than No. 200 sieve size)	SILTS AND CLAYS (liquid limit less than 50)		ML	Inorganic silts and very fine sands, rock flour, silty or clayey fine sands, or clayey silts with slight plasticity.
			CL	Inorganic clays of low to medium plasticity, gravelly clays, sandy clays, silty clays, lean clays.
			OL	Organic silts and organic silty clays of low plasticity.
	SILTS AND CLAYS (liquid limit greater than 50)		MH	Inorganic silts, micaceous or diatomaceous fine sandy or silty soils, elastic silts.
			CH	Inorganic clays of high plasticity, fat clays.
			OH	Organic clays of medium to high plasticity, organic silts.
	HIGHLY ORGANIC SOILS		Pt	Peat and other highly organic soils.

Desired Soil Observations (in this order, if applicable):

Color (Munsell color chart)
Moisture (dry, damp, moist, wet)
Density/Consistency (from above right hand side)
Texture (fine, medium, coarse, etc.)
Name (sand, silty sand, clay, etc., including portions - trace, little, etc.)
Gradation (well-graded, poorly-graded, uniform, etc.)
Plasticity (non-plastic, slightly plastic, moderately plastic, highly plastic)
Structure (layering, fractures, cracks, etc.)
Bonding (well, moderately, loosely, etc.,)
Cementation (weak, moderate, or strong)
Geologic Origin (till, marine clay, alluvium, etc.)
Groundwater level

MODIFIED BURMISTER SYSTEM

Descriptive Term	Portion of Total (%)
trace	0 - 10
little	11 - 20
some	21 - 35
adjective (e.g. sandy, clayey)	36 - 50

TERMS DESCRIBING DENSITY/CONSISTENCY

Coarse-grained soils (more than half of material is larger than No. 200 sieve): Includes (1) clean gravels; (2) silty or clayey gravels; and (3) silty, clayey or gravelly sands. Density is rated according to standard penetration resistance (N-value).

Density of Cohesionless Soils	Standard Penetration Resistance N-Value (blows per foot)
Very loose	0 - 4
Loose	5 - 10
Medium Dense	11 - 30
Dense	31 - 50
Very Dense	> 50

Fine-grained soils (more than half of material is smaller than No. 200 sieve): Includes (1) inorganic and organic silts and clays; (2) gravelly, sandy or silty clays; and (3) clayey silts. Consistency is rated according to undrained shear strength as indicated.

Consistency of Cohesive soils	SPT N-Value (blows per foot)	Approximate Undrained Shear Strength (psf)	Field Guidelines
Very Soft	WOH, WOR, WOP, <2	0 - 250	Fist easily penetrates
Soft	2 - 4	250 - 500	Thumb easily penetrates
Medium Stiff	5 - 8	500 - 1000	Thumb penetrates with moderate effort
Stiff	9 - 15	1000 - 2000	Indented by thumb with great effort
Very Stiff	16 - 30	2000 - 4000	Indented by thumbnail
Hard	>30	over 4000	Indented by thumbnail with difficulty

Rock Quality Designation (RQD):

$$\text{RQD (\%)} = \frac{\text{sum of the lengths of intact pieces of core* > 4 inches}}{\text{length of core advance}}$$

*Minimum NQ rock core (1.88 in. OD of core)

Correlation of RQD to Rock Mass Quality

Rock Mass Quality	RQD (%)
Very Poor	≤25
Poor	26 - 50
Fair	51 - 75
Good	76 - 90
Excellent	91 - 100

Desired Rock Observations (in this order, if applicable):

Color (Munsell color chart)
Texture (aphanitic, fine-grained, etc.)
Rock Type (granite, schist, sandstone, etc.)
Hardness (very hard, hard, mod. hard, etc.)
Weathering (fresh, very slight, slight, moderate, mod. severe, severe, etc.)
Geologic discontinuities/jointing:
- -dip (horiz - 0-5 deg., low angle - 5-35 deg., mod. dipping - 35-55 deg., steep - 55-85 deg., vertical - 85-90 deg.)
- -spacing (very close - <2 inch, close - 2-12 inch, mod. close - 1-3 feet, wide - 3-10 feet, very wide >10 feet)
- -tightness (tight, open, or healed)
- -infilling (grain size, color, etc.)

Formation (Waterville, Ellsworth, Cape Elizabeth, etc.)
RQD and correlation to rock mass quality (very poor, poor, etc.)
ref: ASTM D6032 and AASHTO Standard Specification for Highway Bridges, 17th Ed. Table 4.4.8.1.2A
Recovery (inch/inch and percentage)
Rock Core Rate (X.X ft - Y.Y ft (min:sec))

Maine Department of Transportation
Geotechnical Section
Key to Soil and Rock Descriptions and Terms
Field Identification Information

Sample Container Labeling Requirements:

WIN	Blow Counts
Bridge Name / Town	Sample Recovery
Boring Number	Date
Sample Number	Personnel Initials
Sample Depth	

Maine Department of Transportation

Soil/Rock Exploration Log
US CUSTOMARY UNITS

Project: Hancock Bridge #3372 carries Embden Pond Road over Hancock Brook.
Location: Embden, Maine

Boring No.: BB-EHB-101
WIN: 21689.00

Driller:	MaineDOT	**Elevation (ft.)**	426.5	**Auger ID/OD:**	5" Solid Stem
Operator:	Daggett/Maynard	**Datum:**	NAVD88	**Sampler:**	Standard Split Spoon
Logged By:	B. Slaven	**Rig Type:**	CME 45C	**Hammer Wt./Fall:**	140#/30"
Date Start/Finish:	8/7/2017; 08:30-12:30	**Drilling Method:**	Cased Wash Boring	**Core Barrel:**	NQ-2"
Boring Location:	10+30.9, 6.4 ft Lt.	**Casing ID/OD:**	NW-3"	**Water Level*:**	7.0 ft bgs.
Hammer Efficiency Factor:	0.854	**Hammer Type:**	Automatic ☒ Hydraulic ☐ Rope & Cathead ☐		

Definitions:
D = Split Spoon Sample
MD = Unsuccessful Split Spoon Sample Attempt
U = Thin Wall Tube Sample
MU = Unsuccessful Thin Wall Tube Sample Attempt
V = Field Vane Shear Test, PP = Pocket Penetrometer
MV = Unsuccessful Field Vane Shear Test Attempt
R = Rock Core Sample
SSA = Solid Stem Auger
HSA = Hollow Stem Auger
RC = Roller Cone
WOH = Weight of 140lb. Hammer
WOR/C = Weight of Rods or Casing
WO1P = Weight of One Person
S_u = Peak/Remolded Field Vane Undrained Shear Strength (psf)
$S_{u(lab)}$ = Lab Vane Undrained Shear Strength (psf)
q_p = Unconfined Compressive Strength (ksf)
N-uncorrected = Raw Field SPT N-value
Hammer Efficiency Factor = Rig Specific Annual Calibration Value
N_{60} = SPT N-uncorrected Corrected for Hammer Efficiency
N_{60} = (Hammer Efficiency Factor/60%)*N-uncorrected
T_v = Pocket Torvane Shear Strength (psf)
WC = Water Content, percent
LL = Liquid Limit
PL = Plastic Limit
PI = Plasticity Index
G = Grain Size Analysis
C = Consolidation Test

Sample Information

Depth (ft.)	Sample No.	Pen./Rec. (in.)	Sample Depth (ft.)	Blows (/6 in.) Shear Strength (psf) or RQD (%)	N-uncorrected	N_{60}	Casing Blows	Elevation (ft.)	Graphic Log	Visual Description and Remarks	Laboratory Testing Results/ AASHTO and Unified Class.
0							SSA	426.2		4" HMA. 0.3	
5	1D	24/8	5.00 - 7.00	4/6/9/7	15	21				Brown, moist, medium dense, Gravelly SAND, little silt, (Fill).	G#270335 A-1-b, SW-SM WC=5.4%
10	2D	24/1	10.00 - 12.00	1/1/2/2	3	4	SPUN CASE			Brown, moist, very loose, SAND, little silt, trace gravel, (Fill).	
										Cobble from 13.5-14.0 ft bgs.	
15	3D	24/8	15.00 - 17.00	16/11/13/9	24	34		411.5		15.0 Grey, wet, dense, fine SAND, some silt, some gravel.	G#270336 A-2-4, SM WC=11.2%
										Cobble from 19.0-19.5 ft bgs.	
20	4D	16.8/3	20.00 - 21.40	19/32/50(4.8")	---					Cobble from 19.7-20.0 ft bgs. Grey, wet, very dense, fine SAND, some silt, little gravel.	
										Cobbles from 21.0-23.0 ft bgs.	
										Cobble from 23.5-24.0 ft bgs.	
25	5D	24/13	25.00 - 27.00	10/15/16/21	31	44				Grey, wet, dense, fine to coarse SAND, some silt, some gravel, (Glacial Till).	G#270337 A-2-4, SM WC=7.4%
30											

Remarks:

Stratification lines represent approximate boundaries between soil types; transitions may be gradual.

* Water level readings have been made at times and under conditions stated. Groundwater fluctuations may occur due to conditions other than those present at the time measurements were made.

Boring No.: BB-EHB-101

Maine Department of Transportation

Soil/Rock Exploration Log
US CUSTOMARY UNITS

Project: Hancock Bridge #3372 carries Embden Pond Road over Hancock Brook.
Location: Embden, Maine

Boring No.: BB-EHB-101
WIN: 21689.00

Driller:	MaineDOT	**Elevation (ft.)**	426.5	**Auger ID/OD:**	5" Solid Stem
Operator:	Daggett/Maynard	**Datum:**	NAVD88	**Sampler:**	Standard Split Spoon
Logged By:	B. Slaven	**Rig Type:**	CME 45C	**Hammer Wt./Fall:**	140#/30"
Date Start/Finish:	8/7/2017; 08:30-12:30	**Drilling Method:**	Cased Wash Boring	**Core Barrel:**	NQ-2"
Boring Location:	10+30.9, 6.4 ft Lt.	**Casing ID/OD:**	NW-3"	**Water Level*:**	7.0 ft bgs.
Hammer Efficiency Factor:	0.854	**Hammer Type:**	Automatic ☒ Hydraulic ☐ Rope & Cathead ☐		

Definitions:
D = Split Spoon Sample
MD = Unsuccessful Split Spoon Sample Attempt
U = Thin Wall Tube Sample
MU = Unsuccessful Thin Wall Tube Sample Attempt
V = Field Vane Shear Test, PP = Pocket Penetrometer
MV = Unsuccessful Field Vane Shear Test Attempt
R = Rock Core Sample
SSA = Solid Stem Auger
HSA = Hollow Stem Auger
RC = Roller Cone
WOH = Weight of 140 lb. Hammer
WOR/C = Weight of Rods or Casing
WO1P = Weight of One Person
S_u = Peak/Remolded Field Vane Undrained Shear Strength (psf)
$S_{u(lab)}$ = Lab Vane Undrained Shear Strength (psf)
q_p = Unconfined Compressive Strength (ksf)
N-uncorrected = Raw Field SPT N-value
Hammer Efficiency Factor = Rig Specific Annual Calibration Value
N_{60} = SPT N-uncorrected Corrected for Hammer Efficiency
N_{60} = (Hammer Efficiency Factor/60%)*N-uncorrected
T_v = Pocket Torvane Shear Strength (psf)
WC = Water Content, percent
LL = Liquid Limit
PL = Plastic Limit
PI = Plasticity Index
G = Grain Size Analysis
C = Consolidation Test

Depth (ft.)	Sample No.	Pen./Rec. (in.)	Sample Depth (ft.)	Blows (/6 in.) Shear Strength (psf) or RQD (%)	N-uncorrected	N_{60}	Casing Blows	Elevation (ft.)	Graphic Log	Visual Description and Remarks	Laboratory Testing Results/ AASHTO and Unified Class.
30	6D	2.4/1	30.00 - 30.20	50(2.4")	---		NQ-2	396.3		Grey, wet, SILT, some gravel, little sand, (Glacial Till). 30.2	
	R1	60/29	30.20 - 35.20							R1: Cobbles and Boulders, silt and gravel seams. R1: Core Times (min:sec) 30.2-31.2 ft (1:12) 31.2-32.2 ft (0:38) 32.2-33.2 ft (1:29) 33.2-34.2 ft (1:15) 34.2-35.2 ft (1:10) 33% Recovery Slight Artesian Pressure after coring. Core Barrel would not reset, shoe broke, hole abandoned. 35.2	
35								391.3		**Bottom of Exploration at 35.2 feet below ground surface.**	
40											
45											
50											
55											
60											

Remarks:

Stratification lines represent approximate boundaries between soil types; transitions may be gradual.

* Water level readings have been made at times and under conditions stated. Groundwater fluctuations may occur due to conditions other than those present at the time measurements were made.

Maine Department of Transportation

Soil/Rock Exploration Log
US CUSTOMARY UNITS

Project: Hancock Bridge #3372 carries Embden Pond Road over Hancock Brook.
Location: Embden, Maine

Boring No.: BB-EHB-102
WIN: 21689.00

Driller:	MaineDOT	**Elevation (ft.)**	426.4	**Auger ID/OD:**	5" Solid Stem
Operator:	Daggett/Maynard	**Datum:**	NAVD88	**Sampler:**	Standard Split Spoon
Logged By:	B. Slaven	**Rig Type:**	CME 45C	**Hammer Wt./Fall:**	140#/30"
Date Start/Finish:	8/7/2017-8/8/2017	**Drilling Method:**	Cased Wash Boring	**Core Barrel:**	NQ-2"
Boring Location:	10+73.3, 7.5 ft Lt.	**Casing ID/OD:**	NW-3"	**Water Level*:**	None Observed
Hammer Efficiency Factor:	0.854	**Hammer Type:**	Automatic ☒ Hydraulic ☐ Rope & Cathead ☐		

Definitions:
D = Split Spoon Sample
MD = Unsuccessful Split Spoon Sample Attempt
U = Thin Wall Tube Sample
MU = Unsuccessful Thin Wall Tube Sample Attempt
V = Field Vane Shear Test, PP = Pocket Penetrometer
MV = Unsuccessful Field Vane Shear Test Attempt
R = Rock Core Sample
SSA = Solid Stem Auger
HSA = Hollow Stem Auger
RC = Roller Cone
WOH = Weight of 140lb. Hammer
WOR/C = Weight of Rods or Casing
WO1P = Weight of One Person
S_u = Peak/Remolded Field Vane Undrained Shear Strength (psf)
$S_{u(lab)}$ = Lab Vane Undrained Shear Strength (psf)
q_p = Unconfined Compressive Strength (ksf)
N-uncorrected = Raw Field SPT N-value
Hammer Efficiency Factor = Rig Specific Annual Calibration Value
N_{60} = SPT N-uncorrected Corrected for Hammer Efficiency
N_{60} = (Hammer Efficiency Factor/60%)*N-uncorrected
T_v = Pocket Torvane Shear Strength (psf)
WC = Water Content, percent
LL = Liquid Limit
PL = Plastic Limit
PI = Plasticity Index
G = Grain Size Analysis
C = Consolidation Test

Sample Information

Depth (ft.)	Sample No.	Pen./Rec. (in.)	Sample Depth (ft.)	Blows (/6 in.) Shear Strength (psf) or RQD (%)	N-uncorrected	N_{60}	Casing Blows	Elevation (ft.)	Visual Description and Remarks	Laboratory Testing Results/ AASHTO and Unified Class.
0							SSA	426.0	5" HMA, void under pavement. 0.4	
5	1D	24/8	5.00 - 7.00	8/10/6/9	16	23	SPUN CASE		Brown, moist, medium dense, medium to fine SAND, little gravel, little silt, (Fill).	
10	2D	24/1	10.00 - 12.00	5/7/6/6	13	19			Brown, wet, medium dense, medium to fine SAND, little silt, trace gravel, (Fill).	G#270338 A-2-4, SP-SM WC=21.1%
15	3D	24/7	15.00 - 17.00	23/27/15/11	42	60			Brown-grey, wet, very dense, coarse SAND, some gravel, some silt, trace clay, (Fill).	G#270339 A-2-4, SC-SM WC=9.0%
								409.9	16.5 SILT in Spoon Tip.	
20	4D	4.8/1	20.00 - 20.40	50(4.8")	---				Grey, wet, very dense, coarse GRAVEL in Spoon Tip. Cobbles from 21.0-23.0 ft bgs.	
25	5D	3.6/1	25.00 - 25.30	30(3.6")	---				Grey, wet, very dense, Silty SAND, trace gravel, (Glacial Till).	G#270340 A-4, SM WC=7.9%
30										

Remarks:

-Overhead trees dictated Boring location-

Stratification lines represent approximate boundaries between soil types; transitions may be gradual.

* Water level readings have been made at times and under conditions stated. Groundwater fluctuations may occur due to conditions other than those present at the time measurements were made.

Maine Department of Transportation

Soil/Rock Exploration Log
US CUSTOMARY UNITS

Project: Hancock Bridge #3372 carries Embden Pond Road over Hancock Brook.
Location: Embden, Maine

Boring No.: BB-EHB-102
WIN: 21689.00

Driller:	MaineDOT	**Elevation (ft.)**	426.4	**Auger ID/OD:**	5" Solid Stem
Operator:	Daggett/Maynard	**Datum:**	NAVD88	**Sampler:**	Standard Split Spoon
Logged By:	B. Slaven	**Rig Type:**	CME 45C	**Hammer Wt./Fall:**	140#/30"
Date Start/Finish:	8/7/2017-8/8/2017	**Drilling Method:**	Cased Wash Boring	**Core Barrel:**	NQ-2"
Boring Location:	10+73.3, 7.5 ft Lt.	**Casing ID/OD:**	NW-3"	**Water Level*:**	None Observed
Hammer Efficiency Factor:	0.854	**Hammer Type:**	Automatic ☒ Hydraulic ☐ Rope & Cathead ☐		

Definitions:
D = Split Spoon Sample
MD = Unsuccessful Split Spoon Sample Attempt
U = Thin Wall Tube Sample
MU = Unsuccessful Thin Wall Tube Sample Attempt
V = Field Vane Shear Test, PP = Pocket Penetrometer
MV = Unsuccessful Field Vane Shear Test Attempt
R = Rock Core Sample
SSA = Solid Stem Auger
HSA = Hollow Stem Auger
RC = Roller Cone
WOH = Weight of 140 lb. Hammer
WOR/C = Weight of Rods or Casing
WO1P = Weight of One Person
S_u = Peak/Remolded Field Vane Undrained Shear Strength (psf)
$S_{u(lab)}$ = Lab Vane Undrained Shear Strength (psf)
q_p = Unconfined Compressive Strength (ksf)
N-uncorrected = Raw Field SPT N-value
Hammer Efficiency Factor = Rig Specific Annual Calibration Value
N_{60} = SPT N-uncorrected Corrected for Hammer Efficiency
N_{60} = (Hammer Efficiency Factor/60%)*N-uncorrected
T_v = Pocket Torvane Shear Strength (psf)
WC = Water Content, percent
LL = Liquid Limit
PL = Plastic Limit
PI = Plasticity Index
G = Grain Size Analysis
C = Consolidation Test

Sample Information

Depth (ft.)	Sample No.	Pen./Rec. (in.)	Sample Depth (ft.)	Blows (/6 in.) Shear Strength (psf) or RQD (%)	N-uncorrected	N_{60}	Casing Blows	Elevation (ft.)	Visual Description and Remarks	Laboratory Testing Results/ AASHTO and Unified Class.
30	6D	4.8/1	30.00 - 30.40	50(4.8")	---				Grey, wet, very dense, Silty SAND, some gravel, (Glacial Till).	
	R1	60/20	34.80 - 39.80				NQ-2	391.6	34.8 — R1: Cobbles and Boulders, seams of silt and rounded gravel. R1: Core Times (min:sec) 34.8-35.8 ft (0:35) 35.8-36.8 ft (0:19) 36.8-37.8 ft (0:37) 37.8-38.8 ft (0:48) 38.8-39.8 ft (1:04) 33% Recovery	
35										
40								386.4	40.0	
	7D	3.6/1	40.00 - 40.30	50(3.6")	---		NQ-2	386.1	Grey, wet, very dense, Silty SAND, little gravel, boulder and cobble fragments. 40.3 — R2: Cobbles and Boulders. R2: Core Times (min:sec) 40.3-41.3 ft (0:32) 41.3-42.3 ft (1:17) 42.3-43.2 ft (3:50) 48% Recovery R3: Cobbles and Boulders to 43.6 ft bgs. R3: Core Times (min:sec) 43.2-44.2 ft (3:30)	
	R2	34.8/17	40.30 - 43.20							
	R3	37.2/37.2	43.20 - 46.30	RQD = 24%				382.8		
45								380.1	43.6 — Top of Bedrock at Elev. 382.8 ft. R3:Continued: Bedrock: Grey, fine grained, METASANDSTONE, hard, very slight weathering, joints are low angle to steep, very close to close, open, calcite veins. Rock Mass Quality = Very Poor. [MADRID FORMATION] 44.2-45.2 ft (1:16) 45.2-46.3 ft (1:20) 100% Recovery	
50									46.3 — **Bottom of Exploration at 46.3 feet below ground surface.**	
55										
60										

Remarks:

-Overhead trees dictated Boring location-

Stratification lines represent approximate boundaries between soil types; transitions may be gradual.

* Water level readings have been made at times and under conditions stated. Groundwater fluctuations may occur due to conditions other than those present at the time measurements were made.

Appendix B

Laboratory Test Results

State of Maine - Department of Transportation

Laboratory Testing Summary Sheet

Town(s): Embden Work Number: 21689.00

Boring & Sample Identification Number	Station (Feet)	Offset (Feet)	Depth (Feet)	Reference Number	G.S.D.C. Sheet	W.C. %	L.L.	P.I.	Classification		
									Unified	AASHTO	Frost
BB-EHB-101, 1D	10+30.9	6.4 Lt.	5.0-7.0	270335	1	5.4			SW-SM	A-1-b	0
BB-EHB-101, 3D	10+30.9	6.4 Lt.	15.0-17.0	270336	1	11.2			SM	A-2-4	II
BB-EHB-101, 5D	10+30.9	6.4 Lt.	25.0-27.0	270337	1	7.4			SM	A-2-4	II
BB-EHB-102, 2D	10+73.3	7.5 Lt.	10.0-12.0	270338	1	21.1			SP-SM	A-2-4	0
BB-EHB-102, 3D	10+73.3	7.5 Lt.	15.0-16.5	270339	1	9.0			SC-SM	A-2-4	II
BB-EHB-102, 5D	10+73.3	7.5 Lt.	25.0-25.3	270340	1	7.9			SM	A-4	III

Classification of these soil samples is in accordance with AASHTO Classification System M-145-40. This classification is followed by the "Frost Susceptibility Rating" from zero (non-frost susceptible) to Class IV (highly frost susceptible). The "Frost Susceptibility Rating" is based upon the MaineDOT and Corps of Engineers Classification Systems.

GSDC = Grain Size Distribution Curve as determined by AASHTO T 88-93 (1996) and/or ASTM D 422-63 (Reapproved 1998)

WC = water content as determined by AASHTO T 265-93 and/or ASTM D 2216-98

LL = Liquid limit as determined by AASHTO T 89-96 and/or ASTM D 4318-98 NP = Non Plastic

PI = Plasticity Index as determined by AASHTO 90-96 and/or ASTM D4318-98

State of Maine Department of Transportation
GRAIN SIZE DISTRIBUTION CURVE

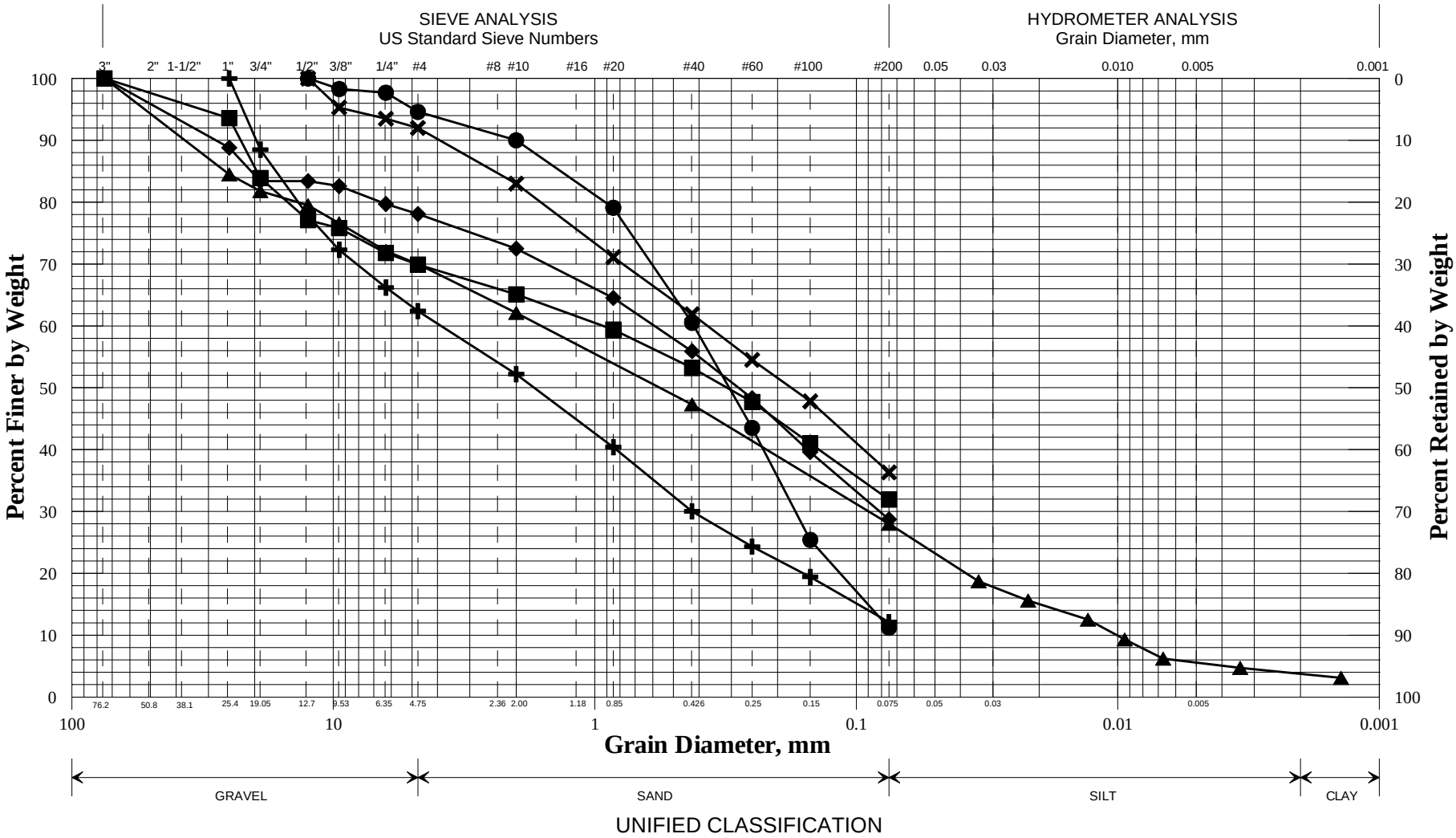

UNIFIED CLASSIFICATION

	Boring/Sample No.	Station	Offset, ft	Depth, ft	Description	W, %	LL	PL	PI
✚	BB-EHB-101/1D	10+30.9	6.4 LT	5.0-7.0	Gravelly SAND, little silt.	5.4			
◆	BB-EHB-101/3D	10+30.9	6.4 LT	15.0-17.0	SAND, some silt, some gravel.	11.2			
■	BB-EHB-101/5D	10+30.9	6.4 LT	25.0-27.0	SAND, some silt, some gravel.	7.4			
●	BB-EHB-102/2D	10+73.3	7.5 LT	10.0-12.0	SAND, little silt, trace gravel.	21.1			
▲	BB-EHB-102/3D	10+73.3	7.5 LT	15.0-16.5	SAND, some gravel, some silt, trace clay.	9.0			
✖	BB-EHB-102/5D	10+73.3	7.5 LT	25.0-25.3	Silty SAND, trace gravel.	7.9			

WIN
021689.00
Town
Embden
Reported by/Date
WHITE, TERRY A 8/26/2017

SHEET 1

Appendix C

Calculations

Earth Pressure

Earth Pressure

Soil Parameters:
Assume existing material removed and replaced with material with properties similar to Soil Type 4, MaineDOT BDG Section 3.6.1.

Unit weight	$\gamma := 125 \cdot pcf$
Internal friction angle	$\phi := 32 \cdot deg$
Cohesion	$c := 0 \cdot psf$

Outlet walls fixed to box - At-Rest Earth Pressure - Rankine Theory

Reference: Fang, Foundation Engineering Handbook 2nd ed. Pg. 224, Eq. 6.2

$$K_o := 1 - \sin(\phi)$$

$$K_o = 0.47$$

Recommend: At-Rest Earth Pressure Coefficient, K_o= 0.47

Outlet walls and headwalls free to rotate - Active Earth Pressure - Rankine Theory

The earth pressure is applied to a plane extending vertically up from the heel of the wall base, and the weight of the soil on the inside of the vertical plane is considered as part of the wall weight. The failure sliding surface is not restricted by the top of the wall or back face of wall.

For cantilver walls with horizontal backslope:

$$K_{ar} := \tan\left(45 \cdot deg - \frac{\phi}{2}\right)^2$$

$$K_{ar} = 0.31$$

For a sloped 2H:1V backfill

β = Angle of fill slope to the horizontal $\qquad \beta := 26.6 \cdot deg$

$$K_{ar_slope} := \cos(\beta) \cdot \frac{\cos(\beta) - \sqrt{\cos(\beta)^2 - \cos(\phi)^2}}{\cos(\beta) + \sqrt{\cos(\beta)^2 - \cos(\phi)^2}} \qquad K_{ar_slope} = 0.46$$

P_a is oriented at an angle of β to the vertical plane - See MaineDOT Bridge Design Guide Figure 3-3 attached.

Recommend: Active Earth Pressure Coefficient, Ka= 0.46

Fang, Foundation Engineering Handbook 2nd ed. p. 224

6.1 AT-REST LATERAL PRESSURES

At-rest pressures exist in level ground, and develop under long-term conditions as the soil is deposited and acted upon by changes in the loading environment as caused by erosion, glaciers, and physicochemical processes. At-rest pressures rigorously only apply for walls that are placed into the ground with a minimum of disturbance and that remain unmoved during loading, or for unmoving, frictionless walls with a backfill placed with a minimum of compactive effort. In practice such conditions are rarely achieved. However, at-rest pressures are still useful in design as either a baseline against which other pressure states can be judged or as an assumed conservative choice for the design loading.

At-rest effective lateral pressures are often assumed to follow a linear distribution (Fig. 6.2), with the effective lateral pressure σ'_x taken as a simple multiple of the vertical effective pressure σ'_z:

$$\sigma'_x = K_0(\sigma'_z) \tag{6.1}$$

In homogeneous, dry soil with a constant K_0 and unit weight, both the vertical and lateral pressures are linearly distributed. With the presence of a water table, the at-rest pressure distribution exhibits a break in slope at the water table, reflecting the use of submerged unit weights to determine vertical effective stresses (Fig. 6.2).

Our early concepts of the parameter K_0 were formed on the basis of normally consolidated soils. Jaky (1944) proposed a relationship between K_0 and the drained friction angle ϕ' for normally consolidated soils:

$$\boxed{K_0 = 1 - \sin\phi'} \tag{6.2}$$

Numerous studies have confirmed the general validity of this empirical equation (Brooker and Ireland, 1965; Mayne and Kulhawy, 1982). However, results from laboratory experiments and in-situ tests have shown that the K_0 value also varies as a function of overconsolidation ratio (OCR) and stress history. For the case of a soil that has been subjected to one or more cycles of unloading, Schmidt (1966) proposed that K_0 can be determined as a function of its value in the normally consolidated state using the relationship

$$K_{0u} = K_{0nc}(\mathrm{OCR})^{\alpha} \tag{6.3}$$

in which K_{0u} is the coefficient for unloading, K_{0nc} is the coefficient for the normally consolidated soil, and α is a dimensionless coefficient. Experimental data have confirmed this relationship, and Mayne and Kulhawy (1982) showed that, for most soils, α can be taken as $\sin\phi'$.

Soils that are overconsolidated and are in the process of being reloaded pose a difficulty in that Equation 6.3 does not apply. For this condition, a more complex equation is needed as well as a full knowledge of the stress history of the soil (Mayne and Kulhawy, 1982). For practical purposes, it may be enough to know that the K_0 during reloading falls about halfway between that for unloading and normally consolidated conditions. Also, K_0 might be directly determined through in-situ testing methods.

TABLE 6.1 TYPICAL COEFFICIENTS OF LATERAL EARTH PRESSURE AT REST.

	Coefficient of Lateral Earth Pressure			
Soil type	*OCR = 1*	*OCR = 2*[a]	*OCR = 5*[a]	*OCR = 10*[a]
Loose sand	0.45	0.65	1.10	1.50
Medium sand	0.40	0.60	1.05	1.55
Dense sand	0.35	0.55	1.00	1.50
Silt	0.50	0.70	1.10	1.60
Lean clay, CL	0.60	0.80	1.20	1.65
Highly plastic clay, CH	0.65	0.80	1.10	1.40

[a] Unloading cycle.

Table 6.1 presents typical values for K_0 for a subset of soils. For other conditions, K_0 values can be determined directly from Equations 6.2 and 6.3, and/or using in-situ testing techniques.

Because the K_0 value in a given soil often varies with depth, and the soil types themselves may change with depth, the at-rest lateral pressure distribution is typically not linear as shown in Figure 6.2. Self-boring pressuremeter tests in clays with overconsolidated profiles induced by desiccation have demonstrated that the K_0 under such conditions decreases with depth in the soil deposit and reaches a steady state where the desiccation effects are no longer present (Clough and Denby, 1980).

6.2 ACTIVE AND PASSIVE LATERAL EARTH PRESSURES

Most walls move, either by global shifting or by local deformations. These movements cause adjustments to occur in the earth loads and the pressure distributions. Conventional means for assessing the effects of system movements are to set them into the context of extreme conditions. These are referred to as the active and passive earth pressure loadings.

6.2.1 Active Pressure

Assuming that a gravity wall with no friction on its face is translated away from a soil mass that is initially at the at-rest condition, then the soil mass adjacent to the wall will pass into a failure state as shown in Figure 6.3. At this stage, the

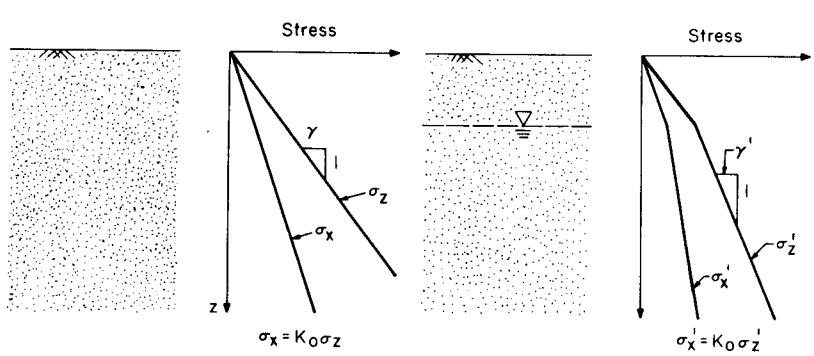

Fig. 6.2 At-rest earth pressure distribution—homogeneous soil.

Figure 3-2 Calculating β with Broken Backfill Surface

Rankine theory, as described in Section 3.6.5.2, may also be used for the design of yielding walls, for a simplified analysis (at the Structural Designer's option). The use of Rankine theory will result in a slightly more conservative design.

3.6.5.2 Rankine Theory

Rankine theory should be used for long-heeled cantilever walls. Refer to AASHTO LRFD Figure C3.11.5.3-1 (a) for the definition of a long heeled cantilever wall. For simplicity (at the Structural Designer's option), Rankine theory may also be used to compute lateral earth pressures on any yielding wall listed in 3.6.5.1 Coulomb Theory, although its use will result in a slightly more conservative design.

For these cases, interface friction between the wall backface and the backfill is not considered. Rankine earth pressure is applied to a plane extending vertically from the heel of the wall base, as shown in Figure 3-3.

For a horizontal backfill surface where $\beta = 0°$, the value of the coefficient of active earth pressure (Rankine), K_a, may be taken as:

$$K_a = \tan^2\left(45° - \frac{\phi}{2}\right)$$

where:

ϕ = angle of internal soil friction (degrees), taken from Table 3-3.

β= angle of backfill to the horizontal (degrees), as shown in Figure 3-3.

For a sloped backfill surface where $\beta > 0°$, the coefficient of active earth pressure (Rankine), K_a, may be taken as:

$$K_a = \cos\beta \cdot \frac{\cos\beta - \sqrt{\cos^2\beta - \cos^2\phi}}{\cos\beta + \sqrt{\cos^2\beta - \cos^2\phi}}$$

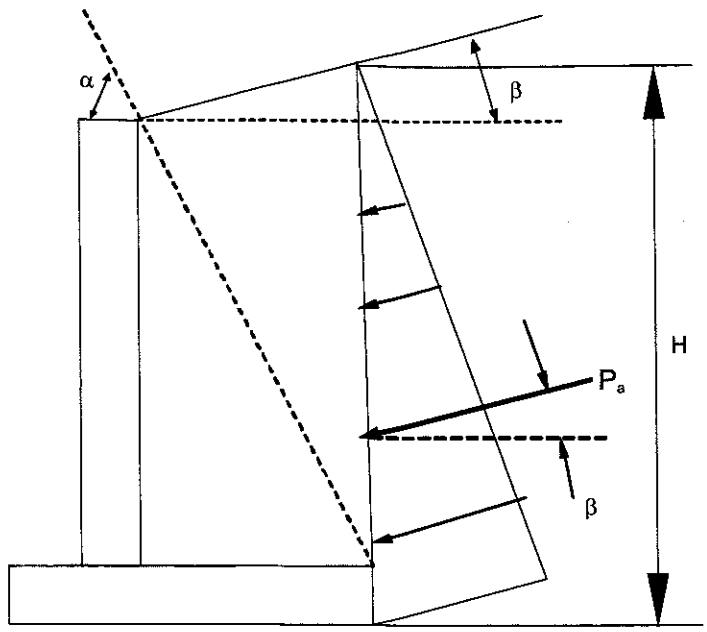

Figure 3-3 Rankine Theory

The resultant earth pressure force, P_a, is oriented at an angle, β, as shown if Figure 3-3. The resultant acts at a distance, H/3, from the base of the footing.

For situations with a broken backfill surface, the active earth pressure coefficient, Ka, may be determined using a β value adjusted per AASHTO LRFD Figures 3.11.5.8 -1 through 3, or substituted with β*, as shown in Figure 3-2.

3.6.6 Coulomb Passive Lateral Earth Pressure Coefficient

Values of the coefficient of passive lateral earth pressure, K_p, may be taken from Figures 3.11.5.4-1 and 2 in AASHTO LRFD or using Coulomb theory, as shown below:

$$K_p = \frac{\sin(\alpha - \phi)^2}{\sin\alpha^2 \cdot \sin(\alpha + \delta) \cdot \left(1 - \sqrt{\frac{\sin(\phi + \delta) \cdot \sin(\phi + \beta)}{\sin(\alpha + \delta) \cdot \sin(\alpha + \beta)}}\right)^2}$$

where:

α = angle (degrees) of back of wall to the horizontal as shown in Figure 3-1.

ϕ = angle of internal soil friction (degrees), taken from Table 3-3.

Bearing Resistance

Objective:
Estimate the factored bearing resistance for a box culvert bearing on soil at the Service Limit State and Strength Limit State.

Given:
1. Limited lab data
2. Soil engineering properties based on correlations to SPT N-values

Assumptions:
1. The box culvert's embedment into the streambed is conservatively assumed as 1 foot, which accounts for the possible scouring away of 1 foot of special fill.
2. The one foot thick layer of proposed Granular Borrow bedding material is ignored.
3. The proposed bearing elevation is approximately 413.0 feet.
4. Proposed finish roadway grade elevation is approximately the same as existing.
5. Proposed precast concrete box base is 28 feet wide.
6. Proposed precast concrete box is approximately 50 feet long.
7. The subsurface conditions present at the proposed bearing elevation in the borings are representative of the conditions for the entire site. Use design N-value of 34 bpf for the consistency of the soils encountered at the box bearing elevation, based on BB-EHB-101; 3D.
8. The bottom of the box culvert will be submerged for the structure's design life.

1. Estimate the factored bearing resistance at the Service Limit State:

The use of presumptive values may be used when sufficient knowledge of geological conditions at or near the structure site exists. AASHTO LRFD Table C10.6.2.6.1-1 provides presumptive bearing resistances for spread footings when a settlement limited bearing resistance is appropriate. For more information see *NavFac DM 7.2*, *May 1983*, *Foundations and Earth Structures*, Table 1, p. 7.2-142.

Type of Bearing Material	Consistency in Place	Bearing Resistance (ksf)	
		Ordinary Range	Recommended Value of Use
Fine to medium sand, silty or clayey medium to coarse sand (SW, SM, SC)	Medium dense to dense	4-8	5

The glacial till deposit is medium dense. Recommend 5 ksf to limit settlement to 1.0 inch for Service Limit State Loads

2. Estimate the factored bearing resistance at the Strength Limit State:

Assumed Foundation Width, Depth, and Water Surface

$B := 28ft$

$D_f := 1.0 \cdot ft$

$D_w := 0 \cdot ft$

$\gamma_w := 62.4 \cdot pcf$

Total unit weight of the soil above the base slab/soil envelope

$\gamma_{above} := 125 \cdot pcf$ MainDOT Bridge Design Guide p. 3-3
Soil Type 4

Foundation soils:

$\gamma 1_d := 134 \cdot pcf$ — Das, Principles of Geotechnical Eng. 7th Ed. p. 59: Table 3.2 Dry, dense angular sand - dry unit weight

$w_{sat} := .11$ — Lab results from BB-EHB-101; 3D

$\gamma 1_{sat} := \gamma 1_d \cdot (1 + w_{sat})$ — Das, Principles of Geotechnical Eng. 7th Ed. p. 59: Table 3.1 Unit weight relationships

$\gamma 1_{sat} = 148.74 \cdot pcf$

$N_{design} := 34$

$\phi := 36 \cdot deg$ — Lambe and Whitman, Soil Mechanics Fig. 11.14

Cohesion $c := 0$

Nominal Bearing Resistance for Strength Limit States: Terzaghi Method - ϕ and c soil.

Shape Factors for square footing (Bowles 5th Ed., pg 220)

$s_\gamma := 0.8$ $\quad s_c := 1.3$

Meyerhof Bearing Capacity Factors - (Ref: Bowles Table 4-4, 5th Ed. pg 223), ϕ = 36 degrees.

$N_c := 50.55$ $\quad N_q := 37.7$ $\quad N_\gamma := 44.4$

Nominal Bearing Resistance per Terzaghi equation

$q := D_f \cdot (\gamma_{above} - \gamma_w)$ $\quad q = 0.063 \cdot ksf$ — Das Principles of Foundation Engineering 7th Ed. p. 142: Eq. 3.16 Water table modification

$q_n := c \cdot N_c \cdot s_c + q \cdot N_q + 0.5 \cdot (\gamma 1_{sat} - \gamma_w) \cdot B \cdot N_\gamma \cdot s_\gamma$ — Bowles Foundation Analysis and Design 5th Ed. p. 220: Table 4-1 Bearing-capacity Equations

$q_n = 45.3 \cdot ksf$

Factored Bearing Resistance for strength limit states

Use a resistance factor per AASHTO LRFD Table 10.5.5.2.2-1

$\varphi_b := 0.45$

$q_r := q_n \cdot \varphi_b$

$\boxed{q_r = 20.4 \cdot ksf}$ for $B = 28 \cdot ft$

Nominal Bearing Resistance for Strength Limit States

Reference: Munfakh, et al (2001) LRFD Article 10.6.3.1.2a

Bearing Capacity Factors (Ref: LRFD Table 10.6.3.1.2a-1)

$$N_c := 50.6$$

$$N_q := 37.8$$

$$N_\gamma := 56.3$$

Shape Factors - per LRFD Table 10.6.3.1.2a-3

$$L := 50 \cdot ft \qquad B := 28 \cdot ft$$

$$s_\gamma := 1 - 0.4 \cdot \left(\frac{B}{L}\right)$$

$$s_q := 1 + \frac{B}{L} \cdot \tan(\phi)$$

$$s_\gamma = 0.78 \qquad s_q = 1.41$$

Groundwater Coefficients - LRFD Table 10.6.3.1.2a-2

The highest anticipated groundwater level should be used in design.

Assume groundwater, or stream elevation, will be above the invert of the structure for the entire design life.

Where the depth of water is less than the depth of the footing, all water coefficients 0.5.

$$C_{wq} := 0.5 \qquad C_{w\gamma} := 0.5$$

Load Inclination factors

No knowledge of vertical and horizontal loads at this time. Use 1.0

$$i_c := 1.0 \qquad i_\gamma := 1.0 \qquad i_q := 1.0$$

Depth correction factors - only used when soils above the footing bearing elevation are as competent as the soils beneath the footing level. Otherwise 1.0

LRFD Table 10.6.3.1.2a-4

$$\frac{D_f}{B} = 0.036$$

Therefore : $d_q := 1.0$

Terms

$N_{cm} := N_c \cdot s_c \cdot i_c$

$N_{qm} := N_q \cdot s_q \cdot d_q \cdot i_q$

$N_{\gamma m} := N_\gamma \cdot s_\gamma \cdot i_\gamma$

$N_{cm} = 65.78$ $N_{\gamma m} = 43.689$ $N_{qm} = 53.179$

Nominal Bearing Resistance (LRFD Eq 10.6.3.1.2a-1)

$$q_n := \left[c \cdot N_{cm} + \gamma_{above} \cdot D_f \cdot N_{qm} \cdot C_{wq} + 0.5 \cdot \gamma 1_{sat} \cdot \overrightarrow{\left(B \cdot N_{\gamma m}\right)} \cdot C_{w\gamma}\right]$$

$q_n = 48.8 \cdot ksf$

Factored Bearing Resistance

$\phi_b := 0.45$

$q_r := q_n \cdot \phi_b$ $\boxed{q_r = 22 \cdot ksf}$

Recommend 22 ksf for the factored bearing resistance at the strength limit state for precast concrete box culverts 28 ft wide or greater.

Objective:
Estimate the factored bearing resistance for precast concrete modular gravity wall bearing on soil at the Service Limit State, Strength Limit State, and Extreme Limit State.

Given:
1. Limited lab data
2. Soil engineering properties based on correlations to SPT N-values

Assumptions:
1. The proposed bearing elevation is approximately 413.0 feet.
2. Proposed finish roadway grade elevation is approximately the same as existing.
3. Proposed precast concrete modular wall stem length is 8 feet.
4. The subsurface conditions present at the proposed bearing elevation in the borings are representative of the conditions for the entire site. Use design N-value of 34 bpf for the consistency of the soils encountered at the box bearing elevation, based on BB-EHB-101; 3D.
5. The bottom of the wall will be submerged for the structure's design life.

1. Estimate the factored bearing resistance at the Service Limit State:

The use of presumptive values may be used when sufficient knowledge of geological conditions at or near the structure site exists. AASHTO LRFD Table C10.6.2.6.1-1 provides presumptive bearing resistances for spread footings when a settlement limited bearing resistance is appropriate. For more information see *NavFac DM 7.2*, *May 1983*, *Foundations and Earth Structures*, Table 1, p. 7.2-142.

Type of Bearing Material	Consistency in Place	Bearing Resistance (ksf)	
		Ordinary Range	Recommended Value of Use
Fine to medium sand, silty or clayey medium to coarse sand (SW, SM, SC)	Medium dense to dense	4-8	5

Recommend 5 ksf to limit settlement to 1.0 inch for Service Limit State Loads

2. Estimate the factored bearing resistance at the Strength Limit State:

Assumed Foundation Width, Depth, and Water Surface

$$B' := \begin{pmatrix} 8 \\ 10 \\ 12 \\ 14 \end{pmatrix} ft$$

B` = Stem Length

$$D_f := 4.0 \cdot ft$$

$$D_w := 0 \cdot ft$$

$$\gamma_w := 62.4 \cdot pcf$$

Total unit weight of the soil above the base slab/soil envelope

$$\gamma_{above} := 125 \cdot pcf$$

MaineDOT Bridge Design Guide p. 3-3
Soil Type 4

Foundation soils:

$\gamma 1_d := 134 \cdot pcf$ — MaineDOT Bridge Design Guide p. 3-3 Soil Type 2

$w_{sat} := .11$ — Lab results from BB-EHB-101; 3D

$\gamma 1_{sat} := \gamma 1_d \cdot (1 + w_{sat})$ — Das, Principles of Geotechnical Eng. 7th Ed. p. 59: Table 3.1 Unit weight relationships

$\gamma 1_{sat} = 148.74 \cdot pcf$

$N_{design} := 34$

$\phi := 36 \cdot deg$ — Lambe and Whitman, Soil Mechanics Fig. 11.14

Cohesion $c := 0$

Nominal Bearing Resistance for Strength Limit States: Terzaghi Method - ϕ and c soil.

Shape Factors for square footing (Bowles 5th Ed., pg 220)

$s_\gamma := 0.8$ $\quad s_c := 1.3$

Meyerhof Bearing Capacity Factors - (Ref: Bowles Table 4-4, 5th Ed. pg 223) for ϕ = 36 degrees.

$N_c := 50.55$ $\quad N_q := 37.7$ $\quad N_\gamma := 44.4$

Nominal Bearing Resistance per Terzaghi equation

$q := D_f \cdot (\gamma_{above} - \gamma_w)$ $\quad q = 0.25 \cdot ksf$ — Das Principles of Foundation Engineering 7th Ed. p. 142: Eq. 3.16 Water table modification

$q_n := c \cdot N_c \cdot s_c + q \cdot N_q + 0.5 \cdot (\gamma 1_{sat} - \gamma_w) \cdot B' \cdot N_\gamma \cdot s_\gamma$ — Bowles Foundation Analysis and Design 5th Ed. p. 220: Table 4-1 Bearing-capacity Equations

$$q_n = \begin{pmatrix} 21.7 \\ 24.8 \\ 27.8 \\ 30.9 \end{pmatrix} \cdot ksf$$

Factored Bearing Resistance for strength limit states

Use a resistance factor per AASHTO LRFD Table 10.5.5.2.2-1

$\varphi_b := 0.45$

$q_r := q_n \cdot \varphi_b$

$$\boxed{q_r = \begin{pmatrix} 9.8 \\ 11.1 \\ 12.5 \\ 13.9 \end{pmatrix} \cdot ksf} \quad \text{for} \quad B' = \begin{pmatrix} 8 \\ 10 \\ 12 \\ 14 \end{pmatrix} \cdot ft$$

Nominal Bearing Resistance for Strength Limit States

Reference: Munfakh, et al (2001) LRFD Article 10.6.3.1.2a

Bearing Capacity Factors (Ref: LRFD Table 10.6.3.1.2a-1)

$$N_c := 50.6$$

$$N_q := 37.8$$

$$N_\gamma := 56.3$$

Shape Factors - per LRFD Table 10.6.3.1.2a-3

$$L := \begin{pmatrix} 8 \\ 10 \\ 12 \\ 14 \end{pmatrix} \cdot ft \qquad B := 5 \cdot ft$$

$$s_\gamma := 1 - 0.4 \cdot \left(\frac{B}{L}\right)$$

$$s_q := 1 + \frac{B}{L} \cdot \tan(\phi)$$

$$s_\gamma = \begin{pmatrix} 0.75 \\ 0.8 \\ 0.83 \\ 0.86 \end{pmatrix} \qquad s_q = \begin{pmatrix} 1.45 \\ 1.36 \\ 1.3 \\ 1.26 \end{pmatrix}$$

Groundwater Coefficients - LRFD Table 10.6.3.1.2a-2

The highest anticipated groundwater level should be used in design.

Assume groundwater, or stream elevation, will be above the invert of the structure for the entire design life.

Where the depth of water is less than the depth of the footing, all water coefficients 0.5.

$$C_{wq} := 0.5 \qquad C_{w\gamma} := 0.5$$

Load Inclination factors

No knowledge of vertical and horizontal loads at this time. Use 1.0

$$i_c := 1.0 \qquad i_\gamma := 1.0 \qquad i_q := 1.0$$

Depth correction factors - only used when soils above the footing bearing elevation are as competent as the soils beneath the footing level. Otherwise 1.0

LRFD Table 10.6.3.1.2a-4

$$\frac{D_f}{B} = 0.8$$

Therefore : $d_q := 1.0$

Terms

$N_{cm} := N_c \cdot s_c \cdot i_c$

$N_{qm} := N_q \cdot s_q \cdot d_q \cdot i_q$

$N_{\gamma m} := N_\gamma \cdot s_\gamma \cdot i_\gamma$

$N_{cm} = 65.78$ $\quad N_{\gamma m} = \begin{pmatrix} 42.225 \\ 45.04 \\ 46.917 \\ 48.257 \end{pmatrix}$ $\quad N_{qm} = \begin{pmatrix} 54.965 \\ 51.532 \\ 49.243 \\ 47.608 \end{pmatrix}$

Nominal Bearing Resistance (LRFD Eq 10.6.3.1.2a-1)

$$q_n := \left[c \cdot N_{cm} + \gamma_{above} \cdot D_f \cdot N_{qm} \cdot C_{wq} + 0.5 \cdot \gamma 1_{sat} \cdot \overrightarrow{\left(B \cdot N_{\gamma m}\right)} \cdot C_{w\gamma} \right]$$

$$q_n = \begin{pmatrix} 21.6 \\ 21.3 \\ 21 \\ 20.9 \end{pmatrix} \cdot ksf$$

Factored Bearing Resistance

$\phi_b := 0.45$

$q_r := q_n \cdot \phi_b$ $\quad \boxed{q_r = \begin{pmatrix} 9.7 \\ 9.6 \\ 9.5 \\ 9.4 \end{pmatrix} \cdot ksf}$

Recommend 9.4 ksf for the factored bearing resistance for precast concrete modular wall units 5 ft wide by 8 feet long or greater at the Strength Limit State.

3. Bearing Resistance for Extreme Limit States

Nominal Bearing Resistance (LRFD Eq 10.6.3.1.2a-1) from above:

$$q_n = \begin{pmatrix} 21.6 \\ 21.3 \\ 21 \\ 20.9 \end{pmatrix} \cdot ksf$$

Factored Bearing Resistance

$$\phi_e := 1.0$$

LRFD Article 10.5.5.3.3

$$q_r := q_n \cdot \phi_e$$

$$q_r = \begin{pmatrix} 21.6 \\ 21.3 \\ 21 \\ 20.9 \end{pmatrix} \cdot ksf$$

Recommend a factored bearing resistance of 21 ksf for precast concrete modular wall units 5 ft wide by 8 feet long or greater at the Extreme Limit State.

3.4 Construction Loads

The construction live load to be used for constructibility checks is 50 psf applied over the entire deck area. Consideration should be given to slab placement sequence for calculation of maximum force effects.

3.5 Railroad Loads

Railroad bridges should be designed according to the latest American Railroad Engineering and Maintenance-of-Way Association specifications (AREMA, 2002), with the Cooper live loading as determined by the railroad company.

3.6 Earth Loads

3.6.1 General

Earth pressures considered for wall and substructure design must use the appropriate soil weight shown in Table 3-3.

Table 3-3 Material Classification

Soil Type	Soil Description	Internal Angle of Friction of Soil, ϕ	Soil Total Unit Weight (pcf)	Coeff. of Friction, tan δ, Concrete to Soil	Interface Friction, Angle, Concrete to Soil δ
1	Very loose to loose silty sand and gravel Very loose to loose sand Very loose to medium density sandy silt Stiff to very stiff clay or clayey silt	29° *	100	0.35	19°
2	Medium density silty sand and gravel Medium density to dense sand Dense to very dense sandy silt	33°	120	0.40	22°
3	Dense to very dense silty sand and gravel Very dense sand	36°	130	0.45	24°
4	Granular underwater backfill Granular borrow	32°	125	0.45	24°
5	Gravel Borrow	36°	135	0.50	27°

* The value given for the internal angle of friction (ϕ) for stiff to very stiff silty clay or clayey silt should be used with caution due to the large possible variation with different moisture contents.

3.4 Various Unit-Weight Relationships

In Sections 3.2 and 3.3, we derived the fundamental relationships for the moist unit weight, dry unit weight, and saturated unit weight of soil. Several other forms of relationships that can be obtained for γ, γ_d, and γ_{sat} are given in Table 3.1. Some typical values of void ratio, moisture content in a saturated condition, and dry unit weight for soils in a natural state are given in Table 3.2.

Table 3.1 Various Forms of Relationships for γ, γ_d, and γ_{sat}

Moist unit weight (γ)		Dry unit weight (γ_d)		Saturated unit weight (γ_{sat})	
Given	Relationship	Given	Relationship	Given	Relationship
w, G_s, e	$\frac{(1+w)G_s\gamma_w}{1+e}$	γ, w	$\frac{\gamma}{1+w}$	G_s, e	$\frac{(G_s+e)\gamma_w}{1+e}$
S, G_s, e	$\frac{(G_s+Se)\gamma_w}{1+e}$	G_s, e	$\frac{G_s\gamma_w}{1+e}$	G_s, n	$[(1-n)G_s+n]\gamma_w$
w, G_s, S	$\frac{(1+w)G_s\gamma_w}{1+\frac{wG_s}{S}}$	G_s, n	$G_s\gamma_w(1-n)$	G_s, w_{sat}	$\left(\frac{1+w_{sat}}{1+w_{sat}G_s}\right)G_s\gamma_w$
w, G_s, n	$G_s\gamma_w(1-n)(1+w)$	G_s, w, S	$\frac{G_s\gamma_w}{1+\left(\frac{wG_s}{S}\right)}$	e, w_{sat}	$\left(\frac{e}{w_{sat}}\right)\left(\frac{1+w_{sat}}{1+e}\right)\gamma_w$
S, G_s, n	$G_s\gamma_w(1-n)+nS\gamma_w$	e, w, S	$\frac{eS\gamma_w}{(1+e)w}$	n, w_{sat}	$n\left(\frac{1+w_{sat}}{w_{sat}}\right)\gamma_w$
		γ_{sat}, e	$\gamma_{sat}-\frac{e\gamma_w}{1+e}$	γ_d, e	$\gamma_d+\left(\frac{e}{1+e}\right)\gamma_w$
		γ_{sat}, n	$\gamma_{sat}-n\gamma_w$	γ_d, n	$\gamma_d+n\gamma_w$
		γ_{sat}, G_s	$\frac{(\gamma_{sat}-\gamma_w)G_s}{(G_s-1)}$	γ_d, S	$\left(1-\frac{1}{G_s}\right)\gamma_d+\gamma_w$
				γ_d, w_{sat}	$\gamma_d(1+w_{sat})$

Table 3.2 Void Ratio, Moisture Content, and Dry Unit Weight for Some Typical Soils in a Natural State

Type of soil	Void ratio, e	Natural moisture content in a saturated state (%)	Dry unit weight, γ_d	
			lb/ft^3	kN/m^3
Loose uniform sand	0.8	30	92	14.5
Dense uniform sand	0.45	16	115	18
Loose angular-grained silty sand	0.65	25	102	16
Dense angular-grained silty sand	0.4	15	121	19
Stiff clay	0.6	21	108	17
Soft clay	0.9–1.4	30–50	73–93	11.5–14.5
Loess	0.9	25	86	13.5
Soft organic clay	2.5–3.2	90–120	38–51	6–8
Glacial till	0.3	10	134	21

Lambe and Whitman, Soil Mechanics, 1969

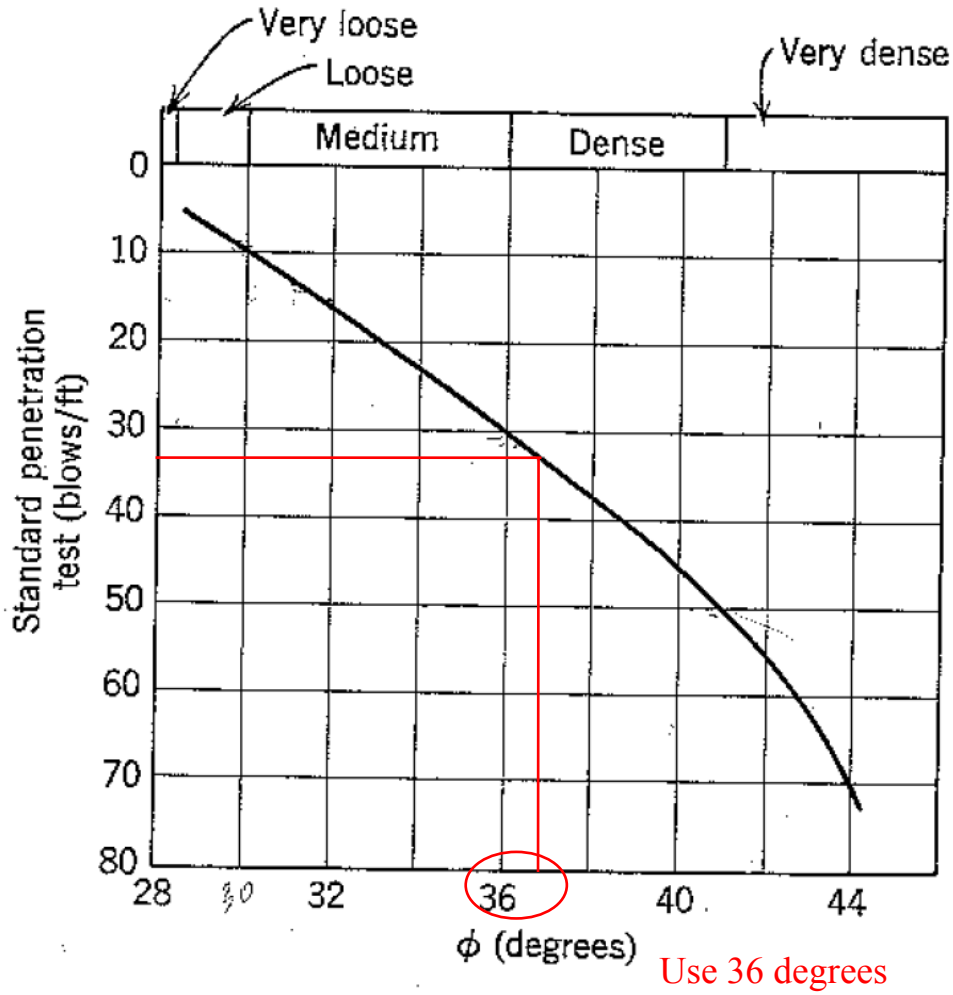

Use 36 degrees

Fig. 11.14 Correlation between friction angle and penetration resistance (From Peck, Hanson, and Thornburn, 1953).

Bowles Foundation Analysis and Design 5th ed.

The Terzaghi Bearing-Capacity Equation

One of the early sets of bearing-capacity equations was proposed by Terzaghi (1943) as shown in Table 4-1. These equations are similar to Eq. (k) derived in the previous section, but Terzaghi used shape factors noted when the limitations of the equation were discussed. Terzaghi's equations were produced from a slightly modified bearing-capacity theory devel-

TABLE 4-1
Bearing-capacity equations by the several authors indicated

Terzaghi (1943). See Table 4-2 for typical values and for $K_{p\gamma}$ values.

$$q_{ult} = cN_c s_c + \bar{q}N_q + 0.5\gamma B N_\gamma s_\gamma \qquad N_q = \frac{a^2}{a\cos^2(45 + \phi/2)}$$

$$a = e^{(0.75\pi - \phi/2)\tan\phi}$$

$$N_c = (N_q - 1)\cot\phi$$

$$N_\gamma = \frac{\tan\phi}{2}\left(\frac{K_{p\gamma}}{\cos^2\phi} - 1\right)$$

For:	strip	round	square
$s_c =$	1.0	1.3	1.3
$s_\gamma =$	1.0	0.6	0.8

Meyerhof (1963).* See Table 4-3 for shape, depth, and inclination factors.

Vertical load: $q_{ult} = cN_c s_c d_c + \bar{q}N_q s_q d_q + 0.5\gamma B' N_\gamma s_\gamma d_\gamma$

Inclined load: $q_{ult} = cN_c d_c i_c + \bar{q}N_q d_q i_q + 0.5\gamma B' N_\gamma d_\gamma i_\gamma$

$$N_q = e^{\pi\tan\phi}\tan^2\left(45 + \frac{\phi}{2}\right)$$

$$N_c = (N_q - 1)\cot\phi$$

$$N_\gamma = (N_q - 1)\tan(1.4\phi)$$

Hansen (1970).* See Table 4-5 for shape, depth, and other factors.

General:† $q_{ult} = cN_c s_c d_c i_c g_c b_c + \bar{q}N_q s_q d_q i_q g_q b_q + 0.5\gamma B' N_\gamma s_\gamma d_\gamma i_\gamma g_\gamma b_\gamma$

when $\phi = 0$

use $q_{ult} = 5.14 s_u(1 + s'_c + d'_c - i'_c - b'_c - g'_c) + \bar{q}$

N_q = same as Meyerhof above

N_c = same as Meyerhof above

$N_\gamma = 1.5(N_q - 1)\tan\phi$

Vesić (1973, 1975).* See Table 4-5 for shape, depth, and other factors. Use Hansen's equations above.

N_q = same as Meyerhof above

N_c = same as Meyerhof above

$N_\gamma = 2(N_q + 1)\tan\phi$

*These methods require a trial process to obtain design base dimensions since width B and length L are needed to compute shape, depth, and influence factors.

†See Sec. 4-6 when $i_i < 1$.

Bowles Foundation Analysis and Design 5th ed.

N_γ values shows the following:

ϕ	Terzaghi* (1943)	Bolton and Lau (1993)	Kumbhojkar (1993)	Table 4-2 (this text)
34°	36	43.5	32	36
48	780	638	650.7	780.1

*See Terzaghi (1943), Fig. 38 and page 128.

Fortunately the N_γ term does not make a significant contribution to the computed bearing capacity, so any of the values from Tables 4-2 or 4-4 can be used (or perhaps an average).

Bolton and Lau (1993) produced new N_q and N_γ values for strip and circular footings for both smooth and rough ground interfacings. Their N_q values for either smooth or rough strips are little different from the Hansen values for rough strips. The N_q values for circular footings range to more than two times the strip values. The N_γ values for rough footings compare well with the Vesić values in Table 4-4. Since the Table 4-4 values have shape s_i and depth d_i factors to be applied, it appears that these "new" values offer little advantage and are certainly more difficult to compute (see comparison with Terzaghi values in preceding table).

Meyerhof's Bearing-Capacity Equation

Meyerhof (1951, 1963) proposed a bearing-capacity equation similar to that of Terzaghi but included a shape factor s_q with the depth term N_q. He also included depth factors d_i and

TABLE 4-4
Bearing-capacity factors for the Meyerhof, Hansen, and Vesić bearing-capacity equations

Note that N_c and N_q are the same for all three methods; subscripts identify author for N_γ

ϕ	N_c	N_q	$N_{\gamma(H)}$	$N_{\gamma(M)}$	$N_{\gamma(V)}$	N_q/N_c	$2\tan\phi(1-\sin\phi)^2$
0	5.14*	1.0	0.0	0.0	0.0	0.195	0.000
5	6.49	1.6	0.1	0.1	0.4	0.242	0.146
10	8.34	2.5	0.4	0.4	1.2	0.296	0.241
15	10.97	3.9	1.2	1.1	2.6	0.359	0.294
20	14.83	6.4	2.9	2.9	5.4	0.431	0.315
25	20.71	10.7	6.8	6.8	10.9	0.514	0.311
26	22.25	11.8	7.9	8.0	12.5	0.533	0.308
28	25.79	14.7	10.9	11.2	16.7	0.570	0.299
30	30.13	18.4	15.1	15.7	22.4	0.610	0.289
32	35.47	23.2	20.8	22.0	30.2	0.653	0.276
34	42.14	29.4	28.7	31.1	41.0	0.698	0.262
36	50.55	37.7	40.0	44.4	56.2	0.746	0.247
38	61.31	48.9	56.1	64.0	77.9	0.797	0.231
40	75.25	64.1	79.4	93.6	109.3	0.852	0.214
45	133.73	134.7	200.5	262.3	271.3	1.007	0.172
50	266.50	318.5	567.4	871.7	761.3	1.195	0.131

* $= \pi + 2$ as limit when $\phi \to 0°$.

Slight differences in above table can be obtained using program BEARING.EXE on diskette depending on computer used and whether or not it has floating point.

AASHTO LRFD Bridge Design Specification, 7th ed. 2014

The foundation resistance after scour due to the design flood shall provide adequate foundation resistance using the resistance factors given in this Article.

10.5.5.2.2—Spread Footings

The resistance factors provided in Table 10.5.5.2.2-1 shall be used for strength limit state design of spread footings, with the exception of the deviations allowed for local practices and site specific considerations in Article 10.5.5.2.

Note that not all of the resistance factors provided in this Article have been derived using statistical data from which a specific β value can be estimated, since such data were not always available. In those cases, where data were not available, resistance factors were estimated through calibration by fitting to past allowable stress design safety factors, e.g., the AASHTO *Standard Specifications for Highway Bridges* (2002).

Additional discussion regarding the basis for the resistance factors for each foundation type and limit state is provided in Articles 10.5.5.2.2, 10.5.5.2.3, 10.5.5.2.4, and 10.5.5.2.5. Additional, more detailed information on the development of the resistance factors for foundations provided in this Article, and a comparison of those resistance factors to previous Allowable Stress Design practice, e.g., AASHTO (2002), is provided in Allen (2005).

Scour design for the design flood must satisfy the requirement that the factored foundation resistance after scour is greater than the factored load determined with the scoured soil removed. The resistance factors will be those used in the Strength Limit State, without scour.

C10.5.5.2.2

Table 10.5.5.2.2-1—Resistance Factors for Geotechnical Resistance of Shallow Foundations at the Strength Limit State

Method/Soil/Condition			Resistance Factor
Bearing Resistance	φ_b	Theoretical method (Munfakh et al., 2001), in clay	0.50
		Theoretical method (Munfakh et al., 2001), in sand, using *CPT*	0.50
		Theoretical method (Munfakh et al., 2001), in sand, using *SPT*	0.45
		Semi-empirical methods (Meyerhof, 1957), all soils	0.45
		Footings on rock	0.45
		Plate Load Test	0.55
Sliding	φ_τ	Precast concrete placed on sand	0.90
		Cast-in-Place Concrete on sand	0.80
		Cast-in-Place or precast Concrete on Clay	0.85
		Soil on soil	0.90
	φ_{ep}	Passive earth pressure component of sliding resistance	0.50

The resistance factors in Table 10.5.5.2.2-1 were developed using both reliability theory and calibration by fitting to Allowable Stress Design (ASD). In general, ASD safety factors for footing bearing capacity range from 2.5 to 3.0, corresponding to a resistance factor of approximately 0.55 to 0.45, respectively, and for sliding, an ASD safety factor of 1.5, corresponding to a resistance factor of approximately 0.9. Calibration by fitting to ASD controlled the selection of the resistance factor in cases where statistical data were limited in quality or quantity.

AASHTO LRFD Bridge Design Specification, 8th ed. 2017

where:

B = footing width (ft)
L = footing length (ft)
H = unfactored horizontal load (kips)
V = unfactored vertical load (kips)
θ = projected direction of load in the plane of the footing, measured from the side of length L (degrees)

In practice, therefore, for footings with modest embedment, consideration may be given to omission of the load inclination factors.

Figure C10.6.3.1.2a-1 shows the convention for determining the θ angle in Eq. 10.6.3.1.2a-9.

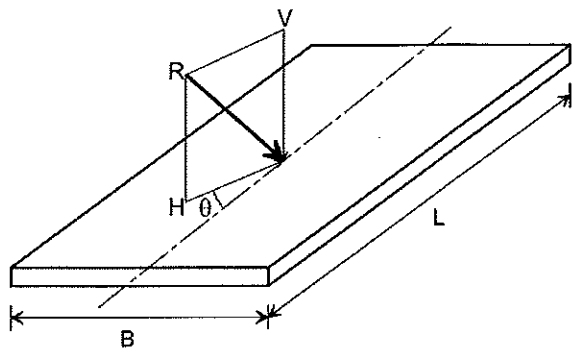

Figure C10.6.3.1.2a-1—Inclined Loading Conventions

Table 10.6.3.1.2a-1—Bearing Capacity Factors N_c (Prandtl, 1921), N_q (Reissner, 1924), and N_γ (Vesic, 1975)

ϕ_f	N_c	N_q	N_γ	ϕ_f	N_c	N_q	N_γ
0	5.14	1.0	0.0	23	18.1	8.7	8.2
1	5.4	1.1	0.1	24	19.3	9.6	9.4
2	5.6	1.2	0.2	25	20.7	10.7	10.9
3	5.9	1.3	0.2	26	22.3	11.9	12.5
4	6.2	1.4	0.3	27	23.9	13.2	14.5
5	6.5	1.6	0.5	28	25.8	14.7	16.7
6	6.8	1.7	0.6	29	27.9	16.4	19.3
7	7.2	1.9	0.7	30	30.1	18.4	22.4
8	7.5	2.1	0.9	31	32.7	20.6	26.0
9	7.9	2.3	1.0	32	35.5	23.2	30.2
10	8.4	2.5	1.2	33	38.6	26.1	35.2
11	8.8	2.7	1.4	34	42.2	29.4	41.1
12	9.3	3.0	1.7	35	46.1	33.3	48.0
13	9.8	3.3	2.0	36	50.6	37.8	56.3
14	10.4	3.6	2.3	37	55.6	42.9	66.2
15	11.0	3.9	2.7	38	61.4	48.9	78.0
16	11.6	4.3	3.1	39	67.9	56.0	92.3
17	12.3	4.8	3.5	40	75.3	64.2	109.4
18	13.1	5.3	4.1	41	83.9	73.9	130.2
19	13.9	5.8	4.7	42	93.7	85.4	155.6
20	14.8	6.4	5.4	43	105.1	99.0	186.5
21	15.8	7.1	6.2	44	118.4	115.3	224.6
22	16.9	7.8	7.1	45	133.9	134.9	271.8

Table 10.6.3.1.2a-2—Coefficients C_{wq} and $C_{w\gamma}$ for Various Groundwater Depths

D_w	C_{wq}	$C_{w\gamma}$
0.0	0.5	0.5
D_f	1.0	0.5
$>1.5B + D_f$	1.0	1.0

Where the position of groundwater is at a depth less than 1.5 times the footing width below the footing base, the bearing resistance is affected. The highest anticipated groundwater level should be used in design.

© 2017 by the American Association of State Highway and Transportation Officials.
All rights reserved. Duplication is a violation of applicable law.

Table 10.6.3.1.2a-3—Shape Correction Factors s_c, s_γ, s_q

Factor	Friction Angle	Cohesion Term (s_c)	Unit Weight Term (s_γ)	Surcharge Term (s_q)
Shape Factors s_c, s_γ, s_q	$\phi_f = 0$	$1+\left(\frac{B}{5L}\right)$	1.0	1.0
	$\phi_f > 0$	$1+\left(\frac{B}{L}\right)\left(\frac{N_q}{N_c}\right)$	$1-0.4\left(\frac{B}{L}\right)$	$1+\left(\frac{B}{L}\tan\phi_f\right)$

Table 10.6.3.1.2a-4—Depth Correction Factor d_q

Friction Angle, ϕ_f (degrees)	D_f/B	d_q
32	1	1.20
	2	1.30
	4	1.35
	8	1.40
37	1	1.20
	2	1.25
	4	1.30
	8	1.35
42	1	1.15
	2	1.20
	4	1.25
	8	1.30

The depth correction factor should be used only when the soils above the footing bearing elevation are as competent as the soils beneath the footing level; otherwise, the depth correction factor should be taken as 1.0.

Linear interpolations may be made for friction angles in between those values shown in Table 10.6.3.1.2a-4.

The parent information from which Table 10.6.3.1.2a-4 was developed covered the indicated range of friction angle, ϕ_f. Information beyond the range indicated is not available at this time.

10.6.3.1.2b—Considerations for Punching Shear

If local or punching shear failure is possible, the nominal bearing resistance shall be estimated using reduced shear strength parameters c^* and ϕ^* in Eqs. 10.6.3.1.2b-1 and 10.6.3.1.2b-2. The reduced shear parameters may be taken as:

$$c^* = 0.67c \qquad (10.6.3.1.2b\text{-}1)$$

$$\phi^* = \tan^{-1}(0.67\tan\phi_f) \qquad (10.6.3.1.2b\text{-}2)$$

where:

c^* = reduced effective stress soil cohesion for punching shear (ksf)

ϕ^* = reduced effective stress soil friction angle for punching shear (degrees)

C10.6.3.1.2b

Local shear failure is characterized by a failure surface that is similar to that of a general shear failure but that does not extend to the ground surface, ending somewhere in the soil below the footing. Local shear failure is accompanied by vertical compression of soil below the footing and visible bulging of soil adjacent to the footing but not by sudden rotation or tilting of the footing. Local shear failure is a transitional condition between general and punching shear failure. Punching shear failure is characterized by vertical shear around the perimeter of the footing and is accompanied by a vertical movement of the footing and compression of the soil immediately below the footing but does not affect the soil outside the loaded area. Punching shear failure occurs in loose or compressible soils, in weak soils under slow (drained) loading, and in dense sands for deep footings subjected to high loads.

© 2017 by the American Association of State Highway and Transportation Officials.
All rights reserved. Duplication is a violation of applicable law.

Frost

Method 1 - MaineDOT Design Freezing Index (DFI) Map and Depth of Frost Penetration Table, BDG Section 5.2.1.

From Design Freezing Index Map: **Embden, Maine**
DFI = 1900 degree-days.
Case 1 - coarse grained granular fill soils W=10% (assumed).

For DFI = 1900

$d := 92.6 \cdot in$

Depth of Frost Penetration $d := 92.6\,in$ $d = 7.7 \cdot ft$

Method 2 - ModBerg Software

Examine foundations placed on coarse grained fill soils

Gardiner lies along the same Maine Design Freezing Index contour - use Augusta FAA Airport data from Modberg's freezing index database.

--- ModBerg Results ---

Project Location: Farmington, Maine
Air Design Freezing Index = 2023 F-days
N-Factor = 0.80
Surface Design Freezing Index = 1618 F-days
Mean Annual Temperature = 41.2 deg F
Design Length of Freezing Season = 145 days

Layer #:Type	t	w%	d	Cf	Cu	Kf	Ku	L
1-Coarse	92.8	10.0	125.0	28	34	2.0	1.6	1,800

t = Layer thickness, in inches.
w% = Moisture content, in percentage of dry density.
d = Dry density, in lbs/cubic ft.
Cf = Heat Capacity of frozen phase, in BTU/(cubic ft degree F).
Cu = Heat Capacity of thawed phase, in BTU/(cubic ft degree F).
Kf = Thermal conductivity in frozen phase, in BTU/(ft hr degree).
Ku = Thermal conductivity in thawed phase, in BTU/(ft hr degree).
L = Latent heat of fusion, in BTU / cubic ft.

Total Depth of Frost Penetration = 7.73 ft = 92.8 in.

Recommendation: 7.7 feet for design of foundations constructed on coarse grained soils

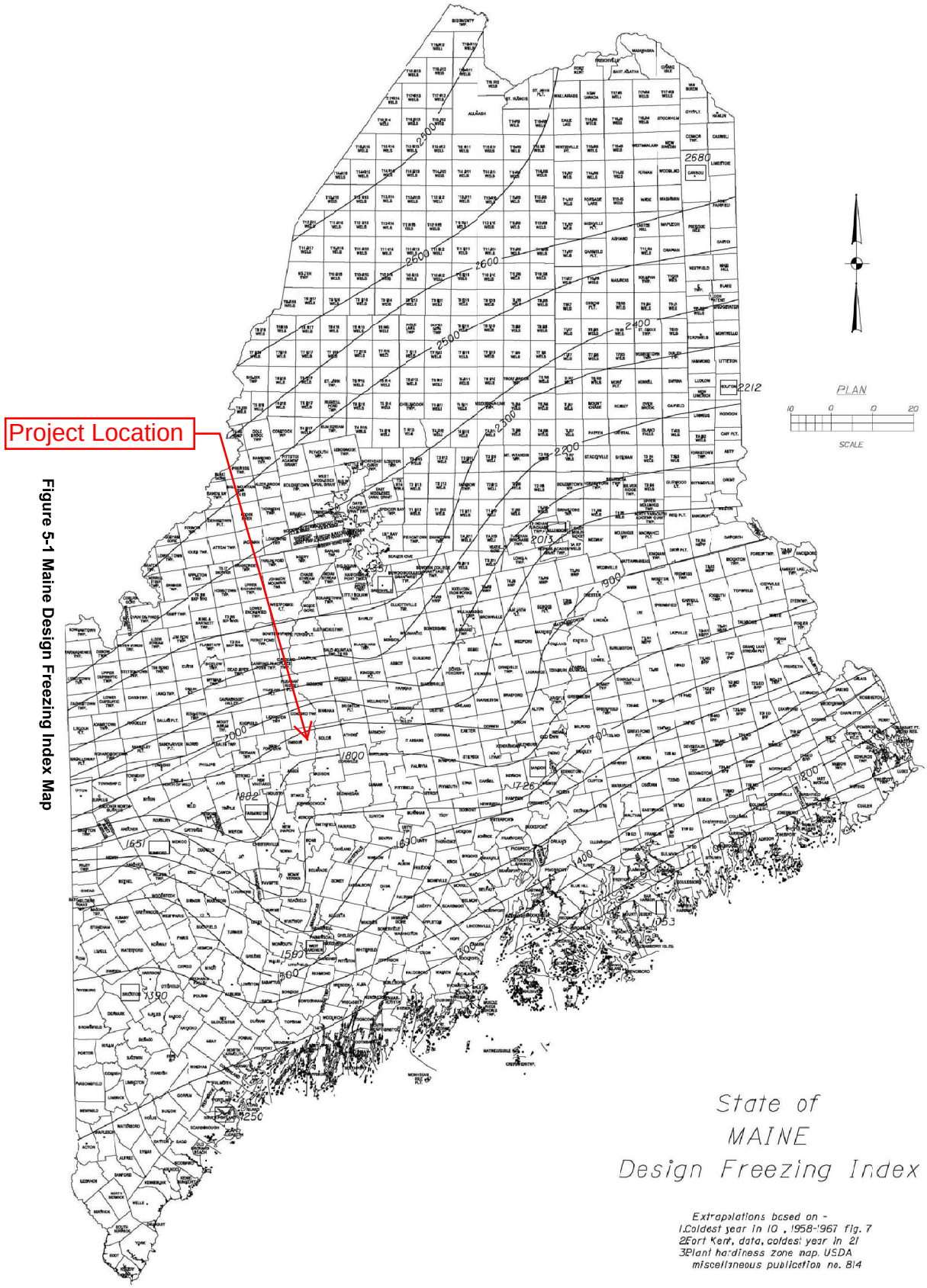

Figure 5-1 Maine Design Freezing Index Map

5.2 General

5.2.1 Frost

Any foundation placed on seasonally frozen soils must be embedded below the depth of frost penetration to provide adequate frost protection and to minimize the potential for freeze/thaw movements. Fine-grained soils with low cohesion tend to be most frost susceptible. Soils containing a high percentage of particles smaller than the No. 200 sieve also tend to promote frost penetration.

In order to estimate the depth of frost penetration at a site, Table 5-1 has been developed using the Modified Berggren equation and Figure 5-1 Maine Design Freezing Index Map. The use of Table 5-1 assumes site specific, uniform soil conditions where the Geotechnical Designer has evaluated subsurface conditions. Coarse-grained soils are defined as soils with sand as the major constituent. Fine-grained soils are those having silt and/or clay as the major constituent. If the make-up of the soil is not easily discerned, consult the Geotechnical Designer for assistance. In the event that specific site soil conditions vary, the depth of frost penetration should be calculated by the Geotechnical Designer.

Table 5-1 Depth of Frost Penetration

Design Freezing Index	Frost Penetration (in)					
	Coarse Grained			Fine Grained		
	w=10%	w=20%	w=30%	w=10%	w=20%	w=30%
1000	66.3	55.0	47.5	47.1	40.7	36.9
1100	69.8	57.8	49.8	49.6	42.7	38.7
1200	73.1	60.4	52.0	51.9	44.7	40.5
1300	76.3	63.0	54.3	54.2	46.6	42.2
1400	79.2	65.5	56.4	56.3	48.5	43.9
1500	82.1	67.9	58.4	58.3	50.2	45.4
1600	84.8	70.2	60.3	60.2	51.9	46.9
1700	87.5	72.4	62.2	62.2	53.5	48.4
1800	90.1	74.5	64.0	64.0	55.1	49.8
1900	92.6	76.6	65.7	65.8	56.7	51.1
2000	95.1	78.7	67.5	67.6	58.2	52.5
2100	97.6	80.7	69.2	69.3	59.7	53.8
2200	100.0	82.6	70.8	71.0	61.1	55.1
2300	102.3	84.5	72.4	72.7	62.5	56.4
2400	104.6	86.4	74.0	74.3	63.9	57.6
2500	106.9	88.2	75.6	75.9	65.2	58.8
2600	109.1	89.9	77.1	77.5	66.5	60.0