STATE OF MAINE
DEPARTMENT OF TRANSPORTATION

PORTLAND

CUMBERLAND

PORTLAND TRANSPORTATION CENTER

FEDERAL PROJECT NO. CM-1749(410)X

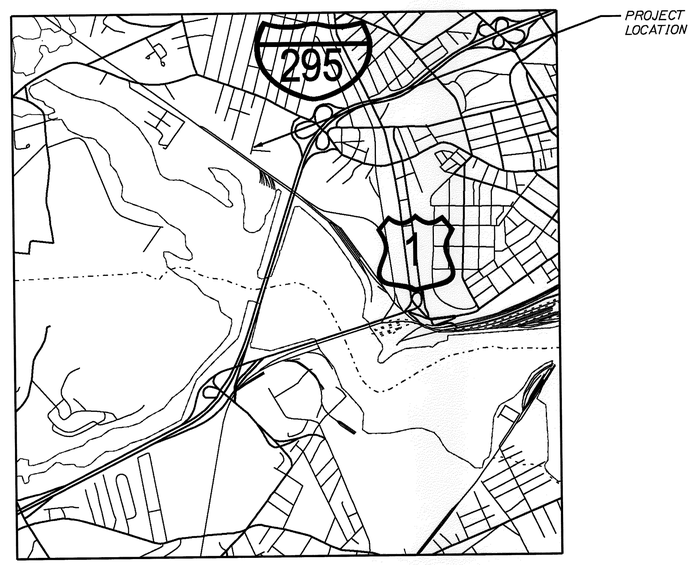

PROJECT LOCATION:	PORTLAND TRANSPORTATION CENTER
PROGRAM AREA:	MULTIMODAL PROGRAM
SCOPE OF WORK:	PURCHASE AND INSTALLATION OF AUTOMATED TICKETING EQUIPMENT AND SOFTWARE

STATE OF MAINE
DEPARTMENT OF TRANSPORTATION

APPROVED	DATE
COMMISSIONER:	10/11/12
CHIEF ENGINEER:	10/10/12

STATE OF MAINE JEFFREY TWEEDIE No. 9544 LICENSED PROFESSIONAL ENGINEER 10/9/12

PROJECT INFORMATION	
PROGRAM	MULTIMODAL PROGRAM
PROJECT MANAGER	JOEL KITTREDGE
DESIGNER	
CONSULTANT	
PROJECT RESIDENT	
CONTRACTOR	
PROJECT COMPLETION DATE	

SIGNATURE	
P.E. NUMBER	9544
DATE	October 9, 2012

PORTLAND TRANSPORTATION CENTER

TITLE SHEET

WIN 17494.10 CM-1749(410)X

SHEET NUMBER 1 OF 1

Filename: ...\001_Title_17494.10 PORTLAND MM.dgnDivision: HIGHWAY Username: Natasha.M.Collins Date:10/9/2012

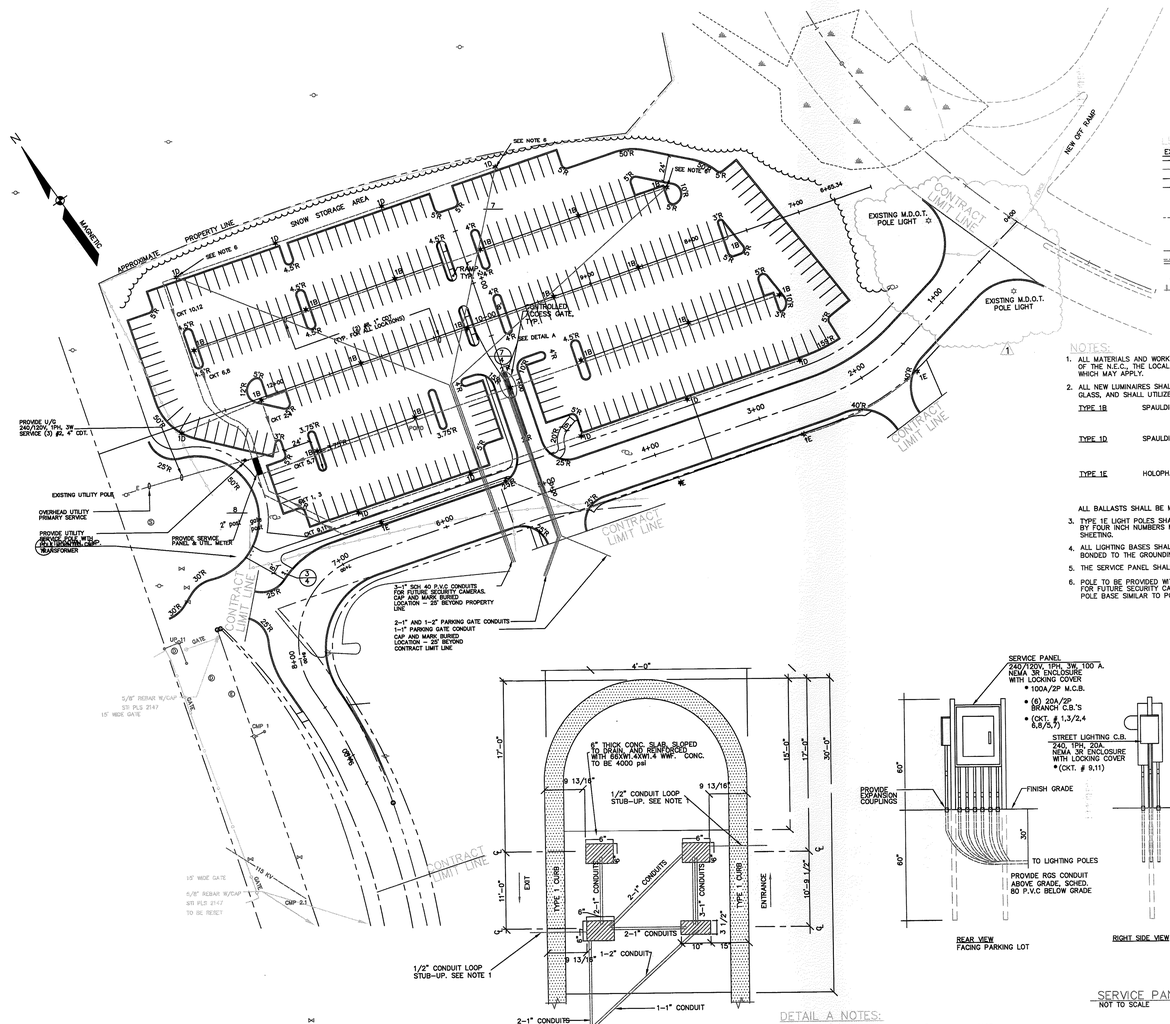

DETAIL A
GATE CONTROLS
NOT TO SCALE

DETAIL A NOTES:

1. LOOP STUB-UP IS TO PRETRUDE 3-4" FROM CURB FACE AND 2-3" BELOW GRADE.
2. ALL CONDUITS SHALL BE SCHEDULE 80 P.V.C. BURIED 30" BELOW FINISH GRADE.
3. CONFINE CONDUIT STUBS TO THE SHADED AREAS AND LIMIT STUB HEIGHT TO 2" ABOVE FINISHED SLAB GRADE.
4. MARK OR CODE CONDUIT RUNS FOR FUTURE EQUIPMENT WIRING INSTALLATION.

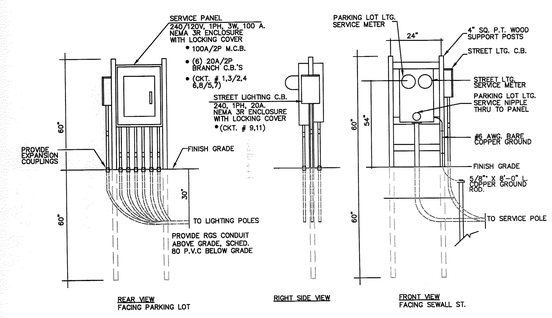

SERVICE PANEL DETAIL
NOT TO SCALE

LEGEND

EXISTING	DESCRIPTION	PROPOSED
	PROPERTY/ROW	
	CENTERLINE	
	MONUMENT	
	IRON PIPE/ROD	
	BUILDING	
	WETLANDS	
	EDGE WETLAND	
	SIGN	
	EDGE PAVEMENT	
	GRAVEL ROAD	
	CURBLINE	
	EDGE WATER	
	TREELINE	
	FENCE	
	RAILROAD	

NOTES:

1. ALL MATERIALS AND WORKMANSHIP SHALL CONFORM TO THE LASTEST VERSION OF THE N.E.C., THE LOCAL ELECTRICAL UTILITY AND ALL LOCAL ORDINANCES, WHICH MAY APPLY.
2. ALL NEW LUMINAIRES SHALL BE IESNA FULL CUT-OFF WITH TEMPERED FLAT GLASS, AND SHALL UTILIZE 150 WATT HPS LAMPS.

TYPE 1B	SPAULDING	# CE1-S150-HPS-VS WITH 20 FT SQUARE STRAIGHT ALUMINUM POLE ANODIZED BLACK
TYPE 1D	SPAULDING	# CE1-S150-HPS-III WITH 20 FT SQUARE STRAIGHT ALUMINUM POLE ANODIZED BLACK
TYPE 1E	HOLOPHANE	# MC 150HP MTMF-GPBGA WITH 30 FT ROUND TAPERED ALUMINUM POLE ANODIZED BLACK

ALL BALLASTS SHALL BE MULTI-TAP.

3. TYPE 1E LIGHT POLES SHALL BE IDENTIFIED (BY DESIGNATIONS TO BE IDENTIFIED) BY FOUR INCH NUMBERS MOUNTED VERTICALLY ON THE POLE WITH REFLECTIVE SHEETING.
4. ALL LIGHTING BASES SHALL HAVE A 5/8" DIA. BY 8 FT. GROUND ROD THAT IS BONDED TO THE GROUNDING CONDUCTOR AND IS LOCATED IN THE FOUNDATION.
5. THE SERVICE PANEL SHALL BE SQUARE D TYPE NQOD, OR EQUAL.
6. POLE TO BE PROVIDED WITH HAND HOLE WITH WATERPROOF COVER AT 16 FEET FOR FUTURE SECURITY CAMERAS INSTALLATION. STUB SECURITY CONDUIT INTO POLE BASE SIMILAR TO POWER CONDUIT.

MaineDOT WIN 17494.10
Portland Transportation Center---Parking System Upgrade
PARKING LOT A
FOR INFORMATION ONLY---NOT FOR CONSTRUCTION
9-21-12

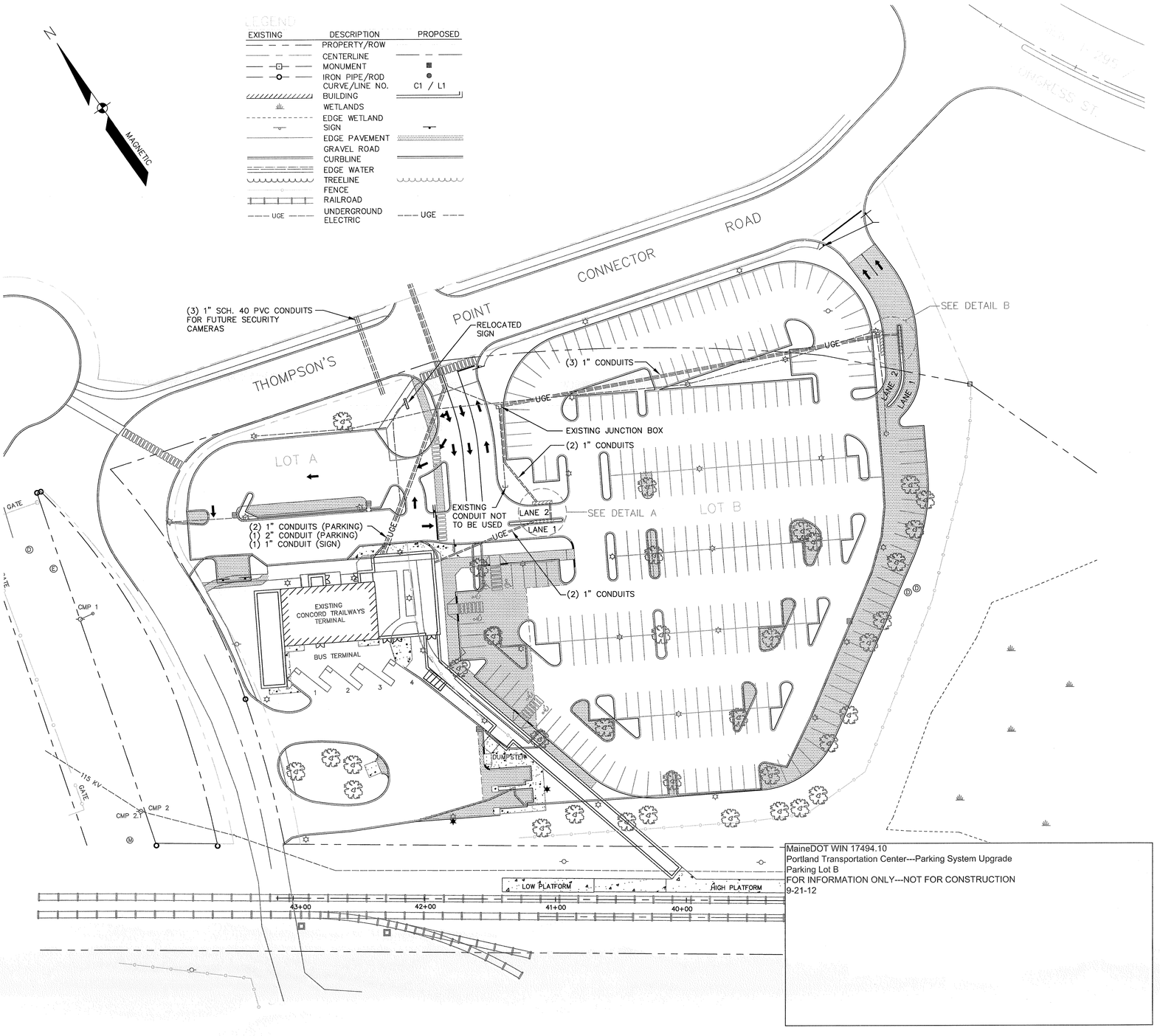
LEGEND
EXISTING
DESCRIPTION
PROPOSED
PROPERTY/ROW
CENTERLINE
MONUMENT
IRON PIPE/ROD
CURVE/LINE NO.
C1 / L1
BUILDING
WETLANDS
EDGE WETLAND
SIGN
EDGE PAVEMENT
GRAVEL ROAD
CURBLINE
EDGE WATER
TREELINE
FENCE
RAILROAD
UGE
UNDERGROUND ELECTRIC
UGE
N
MAGNETIC
CONNECTOR ROAD
POINT
THOMPSON'S
(3) 1" SCH. 40 PVC CONDUITS FOR FUTURE SECURITY CAMERAS
RELOCATED SIGN
(3) 1" CONDUITS
UGE
EXISTING JUNCTION BOX
(2) 1" CONDUITS
LOT A
LOT B
LANE 2
LANE 1
SEE DETAIL A
SEE DETAIL B
EXISTING CONDUIT NOT TO BE USED
(2) 1" CONDUITS (PARKING)
(1) 2" CONDUIT (PARKING)
(1) 1" CONDUIT (SIGN)
(2) 1" CONDUITS
EXISTING CONCORD TRAILWAYS TERMINAL
BUS TERMINAL
DUMPSTER
GATE
CMP 1
CMP 2
CMP 2.1
115 KV
LOW PLATFORM
HIGH PLATFORM
43+00
42+00
41+00
40+00
MaineDOT WIN 17494.10
Portland Transportation Center---Parking System Upgrade
Parking Lot B
FOR INFORMATION ONLY---NOT FOR CONSTRUCTION
9-21-12
GRAPHIC SCALE
40
0
20
40
80
160
(IN FEET)
1 inch = 40 ft.