STATE OF MAINE
DEPARTMENT OF TRANSPORTATION

PERRY
WASHINGTON COUNTY
SMELT BROOK BRIDGE
OVER
SMELT BROOK

FEDERAL AID PROJECT NO. 02663007
BRIDGE NO. 2774
PROJECT LENGTH 0.13 MILES

SPECIFICATIONS

Design: Load and Resistance Factor Design per AASHTO LRFD Bridge Design Specifications, Tenth Edition 2024.

DESIGN LOADING

Live Load ..... HL - 93 Modified for Strength I

HYDROLOGIC DATA

Drainage Area	1.22 sq mi
Discharge (Q10)	135 cfs
Design Discharge (Q50)	210 cfs
Check Discharge (Q100)	240 cfs
Headwater Elevation (Q10) at MHHW	9.34 ft
Headwater Elevation (Q50) at MHHW	9.34 ft
Headwater Elevation (Q100) at MHHW	9.37 ft
Mean Lower Low Water (MLLW)	-9.93 ft
Mean Low Water (MLW)	-9.49 ft
Mean Tide Level (MTL)	-0.31 ft
Mean High Water (MHW)	8.86 ft
Mean Higher High Water (MHHW)	9.34 ft
Highest Astronomical Tide (HAT)	12.83 ft

MATERIALS

Concrete:	
Precast	Class "P"
All Other	Class "A"
Reinforcing:	
Plain Reinforcing Steel	ASTM A615, Grade 60
Glass Fiber Reinforcing Polymer (GFRP)	ASTM D7957
Low-Carbon Chromium Steel:	ASTM A1035, Type CS, Grade 100
Prestressing Strands	AASHTO M 203 (ASTM A416), Grade 270, Low Relaxation

BASIC DESIGN STRESSES

Concrete:	
Class "A"	f 'c = 4,000 psi
Class "P"	f 'c = 8,000psi
	f 'ci = 6,000 psi
Reinforcing:	
Plain Reinforcing Steel	f y = 60,000 psi
Glass Fiber Reinforced Polymer	
Minimum Tensile Strength	f fu = 100,000 psi
Minimum Elastic Modulus	E f = 8,700,000 psi
Minimum Nominal Design Tensile Strain	e fu = 1.1%
Low-Carbon Chromium Steel:	f y = 100,000 psi
Prestressing Strand	F µ = 270,000 psi

LIST OF DRAWINGS

Title Sheet	1
Estimated Quantities and General Notes	2
General Plan	3
Profile	4
Boring Location Plan	5
Interpretive Subsurface Profile	6
Boring Logs	7-8
Typical Sections	9
Cross Sections	10-19
Temporary Detour Plan	20-21
Abutment No. 1 Plan and Elevation	22
Abutment Reinforcement	23
Abutment No. 1 Wingwalls	24
Abutment No. 2 Plan and Elevation	25
Abutment No. 2 Wingwalls	26
Rock Socket Details	27
Framing Plan	28
Girder Details	29-30
Superstructure Plan and Transverse Section	31
Superstructure Reinforcement	32
Right of Way Maps	33-35

UTILITIES

Versant Power	Consolidated Communications
FirstLight	Charter Communications

TRAFFIC DATA

Current (2024) AADT	1720
Future (2036) AADT	1820
DHV - % of AADT	13%
Design Hour Volume	237
Heavy Trucks (% of AADT)	11%
Heavy Trucks (% of DHV)	8%
Directional Distribution (% of DHV)	52%
18 kip Equivalent P 2.0	84
18 kip Equivalent P 2.5	80
Design Speed (mph)	45

MAINTENANCE OF TRAFFIC

Maintain one lane of alternating one - way traffic on temporary bridge upstream of existing bridge controlled by temporary traffic signals.
Maintain two lanes of traffic on approaches to the temporary detour.

Lat./Long. 44°57'16.06" N 67°06'02.33" W

PROJECT LOCATION	Smelt Brook Bridge (#2774) over Smelt Brook. Located 0.10 of a mile west of Thompson Store Road. FHWA INFRA Grant recipient.
OUTLINE OF WORK	Bridge Replacement

Thornton Tomasetti

STATE OF MAINE
DEPARTMENT OF TRANSPORTATION
APPROVED
DATE
ACTING COMMISSIONER: 8-25-25
CHIEF ENGINEER: 8-20-2025

STATE OF MAINE ELIZABETH S. BROWNELL No. 14337 LICENSED PROFESSIONAL ENGINEER

PROJ. MANAGER	MARK PARLIN	BY	DATE
DESIGN-DETAILED	EBROWNELL	DBURGESS	7/11/2025
CHECKED-REVIEWED	EBROWNELL	JBURGESS	7/11/2025
DESIGN2-DETAILED2			
DESIGN3-DETAILED3			
REVISIONS 1			
REVISIONS 2			
REVISIONS 3			
REVISIONS 4			
FIELD CHANGES			

SIGNATURE
14337
P.E. NUMBER
8/12/2025
DATE

BRIDGE NO. 2774
CROSSING SMELT BROOK
PERRY

TITLE SHEET

SHEET NUMBER
1
OF 35

Date: 8/12/2025
Username: EBrownell

Filename: P:\ME1\Projects\P24769.00 - SmeltBrook\CADD Drawings\ORD\BRIDGE\TitleSheet.dgn

ESTIMATED QUANTITIES			
ITEM NO.	DESCRIPTION	QUANTITY	UNIT
201.11	CLEARING	1.5	AC
202.19	REMOVING EXISTING BRIDGE (575 CY)	1	LS
202.202	REMOVING PAVEMENT SURFACE	4300	SY
203.20	COMMON EXCAVATION	9750	CY
203.21	ROCK EXCAVATION	195	CY
203.25	GRANULAR BORROW	680	CY
206.082	STRUCTURAL EARTH EXCAVATION - MAJOR STRUCTURES	565	CY
304.10	AGGREGATE SUBBASE COURSE - GRAVEL	3425	CY
403.2081	HOT MIX ASPHALT, 12.5 MM NOMINAL MAX SIZE (POLYMER MODIFIED)	230	T
403.211	HOT MIX ASPHALT, 9.5 MM NOMINAL MAXIMUM SIZE (SHIMMING)	25	T
403.2131	HOT MIX ASPHALT, 12.5 MM NOM MAX SIZE (BASE AND INTERMEDIATE COURSE POLYMER MODIFIED)	555	T
409.15	BITUMINOUS TACK COAT, APPLIED	170	G
461.131	TEMPORARY PAVEMENT	880	T
501.502	ROCK-SOCKETED H-PILES 117 LB/FT, IN PLACE	300	LF
501.54	STEEL H-BEAM PILES 117 LB/FT, DELIVERED	300	LF
501.804	DRILLING EQUIPMENT MOBILIZATION, ROCK SOCKETED H-PILE	1	LS
502.219	STRUCTURAL CONCRETE, ABUTMENTS & RETAINING WALLS (80 CY)	1	LS
502.261	STRUCTURAL CONCRETE ROADWAY AND SIDEWALK SLAB ON CONCRETE BRIDGE (220 CY)	1	LS
502.31	STRUCTURAL CONCRETE APPROACH SLABS (24 CY)	1	LS
502.49	STRUCTURAL CONCRETE CURBS AND SIDEWALKS (16 CY)	1	LS
503.12	REINFORCING STEEL, FABRICATED AND DELIVERED	18000	LB
503.13	REINFORCING STEEL, PLACING	18000	LB
503.19	LOW-CARBON CHROMIUM REINFORCEMENT, FABRICATED AND DELIVERED	17000	LB
503.20	LOW-CARBON CHROMIUM REINFORCEMENT, PLACING	17000	LB
507.0821	STEEL BRIDGE RAILING, 3 BAR (275 LF)	1	LS
507.0822	STEEL APPROACH RAILING, 3 BAR	4	EA
508.14	HIGH PERFORMANCE WATERPROOFING MEMBRANE (430 SY)	1	LS
510.10	SPECIAL DETOUR, VEHICULAR AND PEDESTRIAN TRAFFIC NOT SEPARATED	1	LS
511.07	COFFERDAM	1	LS
512.081	FRENCH DRAINS (113 LF)	1	LS
515.21	PROTECTIVE COATING FOR CONCRETE SURFACES (140 SY)	1	LS
526.301	TEMPORARY CONCRETE BARRIER TYPE 1 (50 LF)	1	LS
527.34	WORK ZONE CRASH CUSHION	10	UN
530.30	GFRP, REINFORCEMENT BARS, FABRICATED & DELIVERED	25000	LF
530.31	GFRP, REINFORCEMENT BARS, PLACED	25000	LF
535.61	PRESTRESSED STRUCTURAL CONCRETE I-GIRDERS (558 LF)	1	LS
606.1301	31" W-BEAM GUARDRAIL - MID-WAY SPLICE - SINGLE FACED	413	LF
606.1305	31" W-BEAM GUARDRAIL - MID-WAY SPLICE, FLARED TERMINAL	4	EA
606.1721	BRIDGE TRANSITION - TYPE 1	4	EA
606.353	REFLECTORIZED FLEXIBLE GUARDRAIL MARKER	8	EA
610.08	PLAIN RIPRAP	8	CY
610.16	HEAVY RIPRAP	3500	CY
610.18	STONE DITCH PROTECTION	41	CY
613.319	EROSION CONTROL BLANKET	25	SY
615.07	LOAM	90	CY
618.14	SEEDING METHOD NUMBER 2	60	UN
619.12	MULCH	60	UN
619.14	EROSION CONTROL MIX	610	CY
620.58	EROSION CONTROL GEOTEXTILE	2610	SY
627.733	4" WHITE OR YELLOW PAINTED PAVEMENT MARKING LINE	2600	LF
627.77	REMOVING EXISTING PAVEMENT MARKINGS	2000	SF
627.78	TEMPORARY 4" PAVEMENT MARKING LINE, WHITE OR YELLOW	6400	LF
629.05	HAND LABOR, STRAIGHT TIME	20	HR
631.12	ALL PURPOSE EXCAVATOR (INCLUDING OPERATOR)	10	HR
631.14	GRADER (INCLUDING OPERATOR)	10	HR
631.15	ROLLER, EARTH, AND BASE COURSE (INCLUDING OPERATOR)	10	HR
631.172	TRUCK - LARGE (INCLUDING OPERATOR)	10	HR
631.18	CHAIN SAW RENTAL (INCLUDING OPERATOR)	10	HR
631.20	STUMP CHIPPER RENTAL (INCLUDING OPERATOR)	10	HR
631.22	FRONT END LOADER (INCLUDING OPERATOR)	10	HR
631.32	CULVERT CLEANER (INCLUDING OPERATOR)	10	HR
639.19	FIELD OFFICE TYPE B	1	EA
643.72	TEMPORARY TRAFFIC SIGNAL	1	EA
645.292	REGULATORY, WARNING, CONFIRMATION, AND ROUTE MARKER ASSEMBLY SIGNS TYPE II	36	SF
652.312	TYPE III BARRICADE	10	EA
652.33	DRUM	50	EA
652.34	CONE	25	EA
652.35	CONSTRUCTION SIGNS	300	SF
652.361	MAINTENANCE OF TRAFFIC CONTROL DEVICES	1	LS
652.38	FLAGGERS	600	HR
652.41	PORTABLE CHANGEABLE MESSAGE SIGN	2	EA
656.75	TEMPORARY SOIL EROSION AND WATER POLLUTION CONTROL	1	LS
659.10	MOBILIZATION	1	LS

GENERAL CONSTRUCTION NOTES

1. For easements, construction limits, and right of way lines, refer to the Right of Way Map.

2. The clearing limits as shown on the plans are approximate. The actual clearing limits for payment will be established in the field by the Resident.

3. All utility facilities shall be adjusted by the respective utilities unless otherwise noted.

4. Existing signs within the Project limits shall be removed and reset as directed by the Resident. Payment for removal and reinstallation of existing signs will be considered incidental to the Contract. No separate payment will be made.

5. Do not excavate for Aggregate Subbase Course where existing material is suitable as determined by the Resident.

6. In areas where the Resident directs the Contractor not to excavate to the subgrade line shown on the plans, payment for removing existing pavement, grubbing, shaping, ditching, and compacting the existing subbase and layers of new subbase 6 inches or less thick will be made under appropriate equipment rental items.

7. All embankment material, except as otherwise shown, placed below EL. 18.0 shall be Granular Borrow meeting the requirements of Standard Specifications Subsection 703.19, Granular Borrow, for Material for Underwater Backfill.

8. Place riprap on sideslopes up to EL. 18.0

9. Construct the riprap shelf at EL. 21.00 at Abutment No. 1 and at Abutment No. 2.

10. Place loam 2 inches deep on all new or reconstructed sideslopes or as directed by the Resident.

11. Seeding Method No. 2 is anticipated on all undisturbed slope areas.

12. Erosion Control Mix may be substituted in those areas normally receiving loam and seed as directed by the Resident. Placement shall be in accordance with Standard Specifications Section 619, Mulch. Payment will be made under Pay Item 619.14, Erosion Control Mix.

13. Place a 24 inch wide strip of Erosion Control Blanket on the sideslopes along the top of the riprap and behind the wingwalls.

14. A MASH compliant guardrail end treatment shall be installed concurrently with the placement of each section of beam guardrail.

15. Where it is apparent that runoff will cause continual erosion, Erosion Control Blanket, seeded gutters, riprap downspouts, and other gutters lined with Stone Ditch Protection shall be constructed after paving and shoulder work is completed. Payment will be made under the appropriate Contract Items.

16. Where called for on the plans, where new pavement joins existing pavement, the existing pavement shall be sawcut along a smooth line to a neat, even, vertical joint as directed by the Resident. Broken or raveled edges will not be permitted. All work necessary for the preparation of this joint will be considered incidental to the related Contract Items.

17. Inlets and outlets of all culverts shall be riprapped unless otherwise noted on the plans or directed by the Resident.

18. No existing drainage shall be removed, abandoned, or plugged without prior approval of the Resident.

19. Existing culverts and catch basins will be cleaned as directed by the Resident under the appropriate Contract Items.

20. Sign posts and any associated breakaway devices necessary will be considered incidental to Item 645.292, Regulatory, Warning, Confirmation, and Route Marker Assembly Signs Type II.

21. Two relfectorized guardrail markers shall be installed at each guardrail end.

22. Protective Coating for Concrete Surfaces shall be applied to the following areas:

All exposed surfaces of concrete curbs,
Fascias down to the drip notch,
Top of abutment backwalls and wingwalls, and
To one foot below the ground on vertical walls against earth.

23. Project information referred to below may be accessed at the following MaineDOT web address: https://www.maine.gov/dot/doing-business/bid-opportunities

24. The existing bridge plans may be accessed at the MaineDOT web address. The plans are reproductions of the original drawings as prepared for the construction of the bridge. It is very unlikely that the plans will show any construction field changes or any alterations which may have been made to the bridge during its life span.

25. Reports on hydrology and/or hydraulics applicable to the bridge site may be accessed at the MaineDOT web address. The reports are based on MaineDOT's interpretation of the information obtained for the subject site. No assurance is given that the information or the conclusions of the report will be representative of actual conditions at the time of construction.

26. The project geotechnical report titled: Geotechnical Design Report, Smelt Brook Bridge, Soils Report, 2025-08-13 may be accessed at the MaineDOT web address.

27. Geotechnical information furnished or referred to in this plan set is for the use of the Bidders and the Contractor. No assurance is given that the information or interpretations will be representative of actual subsurface conditions at the construction site. MaineDOT will not be responsible for the Bidders' or Contractor's interpretations of, or conclusions drawn from, the geotechnical information. The boring logs contained in the plan set present factual and interpretive subsurface information collected at discrete locations. Data provided may not be representative of the subsurface conditions between the boring locations.

28. Quantities included for pay items measured and paid for by Lump Sum are estimated quantities and are provided by MaineDOT for informational purposes only. Lump Sum pay items will be paid for at the Contract Bid amount, with no addition or reduction in payment to the Contractor if the actual final quantities are different from the MaineDOT provided estimated quantities, except as follows:

a. If a Lump Sum pay item is eliminated, the requirements of Standard Specifications Section 109.2, Elimination of Items, will take precedence.

b. If other Contract Documents specifically allow a change in payment for a Lump Sum pay item, those requirements will be followed.

c. If a design change results in changes to estimated quantities for Lump Sum pay items, price adjustments will be made in accordance with Standard Specifications Section 109.7, Equitable Adjustments to Compensation and Time.

29. This site lends itself to different cofferdam configurations, depending on the Contractor's means and methods. Rather than speculate on how the bidders will configure the cofferdams, the Department has provided a single pay item to be used to cover all cofferdams on the project, regardless of how many are actually used.

30. Payment for equipment, labor and materials to access the work, as well as to re-establish original ground, will be considered incidental to related Contract Items.

31. The Contractor will be responsible for maintaining all existing mailboxes to ensure that the mail will be deliverable. Payment for this work will be considered incidental to the Contract.

Thornton Tomasetti

STATE OF MAINE
DEPARTMENT OF TRANSPORTATION

Federal Project No. 02663007

WIN 026630.07

SIGNATURE

P.E. NUMBER

DATE

		BY	DATE
PROJ MANAGER	MARK PARLIN		
DESIGN-DETAILED	E.BROWNELL	D.BURGESS	7/11/2025
CHECKED-REVIEWED	E.BROWNELL	J.BURGESS	7/11/2025
DESIGN2-DETAILED2			
DESIGN3-DETAILED3			
REVISIONS 1			
REVISIONS 2			
REVISIONS 3			
REVISIONS 4			
FIELD CHANGES			

BRIDGE NO. 2774
CROSSING SMELT BROOK
PERRY

ESTIMATED QUANTITIES
AND GENERAL NOTES

SHEET NUMBER

2

OF 35

Date: 8/12/2025

Username: EBrownell

Filename: P:\ME1\Projects\P24769.00 - SmeltBrook\CADD Drawings\ORD\BRIDGE\Quantities.dgn

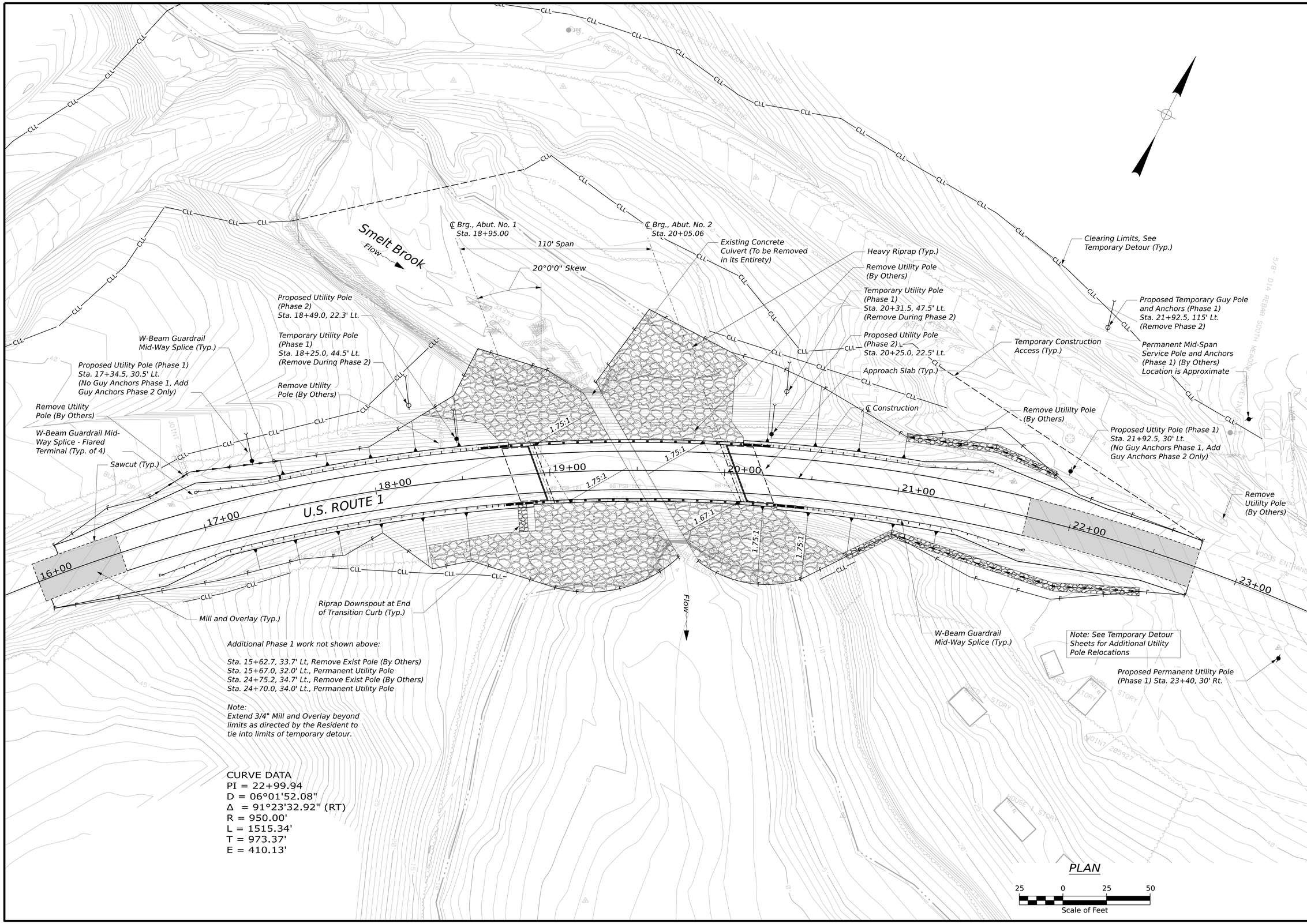

Additional Phase 1 work not shown above:

Sta. 15+62.7, 33.7' Lt, Remove Exist Pole (By Others)
Sta. 15+67.0, 32.0' Lt., Permanent Utility Pole
Sta. 24+75.2, 34.7' Lt., Remove Exist Pole (By Others)
Sta. 24+70.0, 34.0' Lt., Permanent Utility Pole

Note:
Extend 3/4" Mill and Overlay beyond limits as directed by the Resident to tie into limits of temporary detour.

CURVE DATA
PI = 22+99.94
D = 06°01'52.08"
Δ = 91°23'32.92" (RT)
R = 950.00'
L = 1515.34'
T = 973.37'
E = 410.13'

STATE OF MAINE
DEPARTMENT OF TRANSPORTATION

Federal Project No. 02663007

WIN 026630.07

	NAME	BY	DATE
PROJ MANAGER	MARK PARLIN		
DESIGN-DETAILED	E.BROWNELL	D.BURGESS	8/6/2025
CHECKED-REVIEWED	E.BROWNELL	J.BURGESS	8/6/2025
DESIGN2-DETAILED2			
DESIGN3-DETAILED3			
REVISIONS 1			
REVISIONS 2			
REVISIONS 3			
REVISIONS 4			
FIELD CHANGES			

SIGNATURE

P.E. NUMBER

DATE

BRIDGE NO. 2774
CROSSING SMELT BROOK
PERRY

GENERAL PLAN

SHEET NUMBER

3

OF 35

Date: 8/12/2025

Username: diana

Filename: C:\Users\diana\Dropbox\DCS-Projects\Thornton Tomasetti\26630_07\BRIDGE\Plan_Route 1.dgn

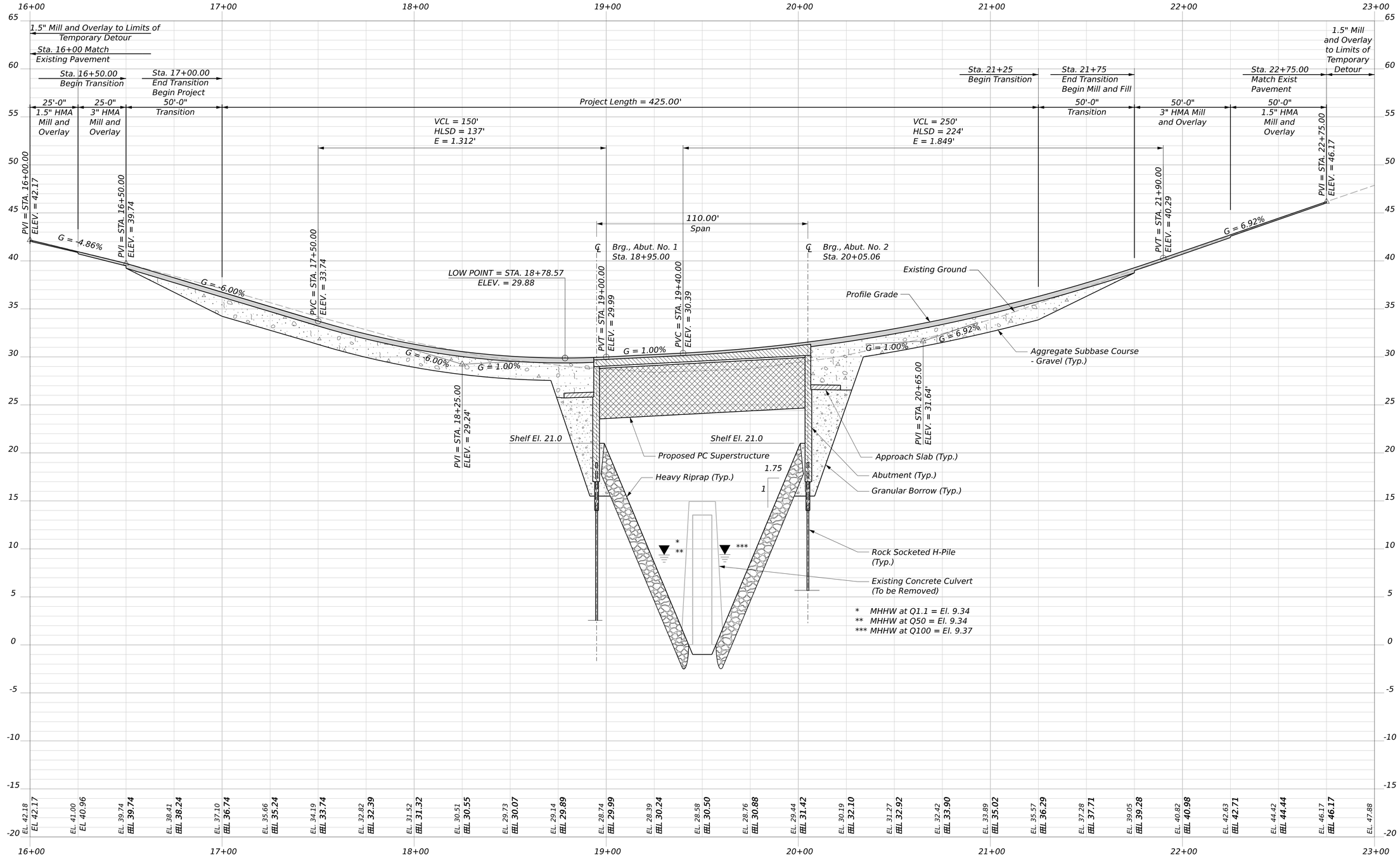

PROFILE

Horiz. 25 0 25 50
Vert. 5 0 5 10
Scale of Feet

STATE OF MAINE
DEPARTMENT OF TRANSPORTATION

Federal Project No. 02663007

WIN 026630.07

SIGNATURE

P.E. NUMBER

DATE

PROJ MANAGER	MARK PARLIN		
DESIGN-DETAILED	E.BROWNELL	D.BURGESS	8/6/2025
CHECKED-REVIEWED	E.BROWNELL	J.BURGESS	8/6/2025
DESIGN2-DETAILED2			
DESIGN3-DETAILED3			
REVISIONS 1			
REVISIONS 2			
REVISIONS 3			
REVISIONS 4			
FIELD CHANGES			

BRIDGE NO. 2774
CROSSING SMELT BROOK
PERRY

PROFILE

SHEET NUMBER

4

OF 35

Date: 8/12/2025

Username: diana

Filename: C:\Users\diana\Dropbox\DCS-Projects\Thornton Tomasetti\26630_07\BRIDGE\Profile_Route 1.dgn

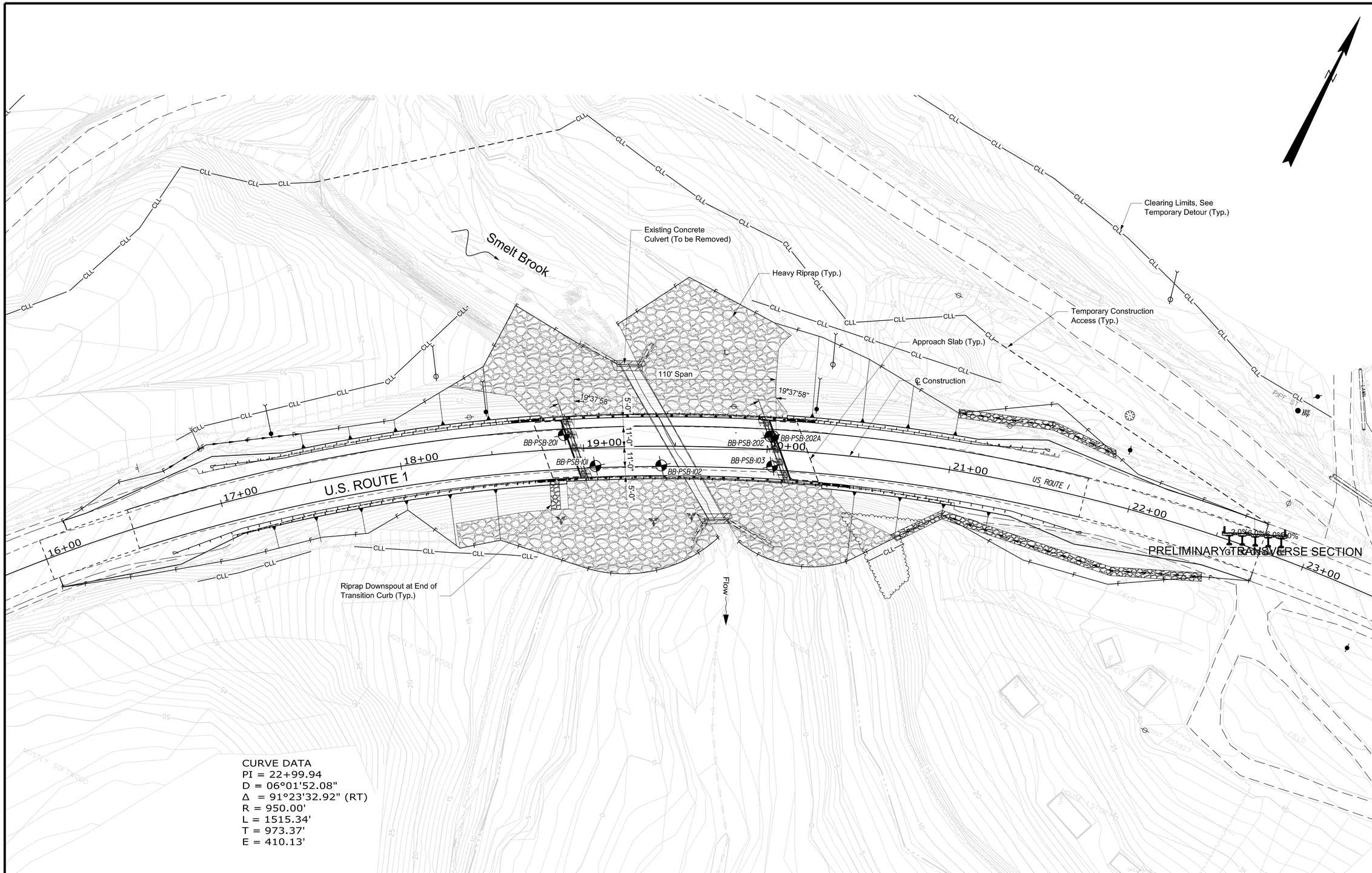

CURVE DATA
PI = 22+99.94
D = 06°01'52.08"
Δ = 91°23'32.92" (RT)
R = 950.00'
L = 1515.34'
T = 973.37'
E = 410.13'

LEGEND

CASED WASHED BORINGS

SOURCE

Base plan is developed from electronic files (Contours.dgn, Text.dgn, Topo.dgn) provided to GEI by Thornton Tomasetti on April 26, 2024, electronic files (Alignment_Route 1.dgn, and Plan_Route 1.dgn) provided to GEI by Thornton Tomasetti on May 22, 2025 and electronic files (Corridor_Route 1_Linework.dgn and Corridor_Route 1.dgn) provided to GEI by Thornton Tomasetti on June 31, 2025.

NOTES

1. Borings BB-PSB-101 through BB-PSB-103 were drilled by New England Boring Contractors of Hermon, Maine between April 12 and April 18, 2024 and were observed by GEI personnel.
2. Borings BB-PSB-201 through BB-PSB-202A were drilled by New England Boring Contractors of Hermon, Maine between May 14 and May 15, 2025 and were observed by GEI personnel.
3. As-drilled boring locations for borings BB-PSB-101 through BB-PSB-103 were surveyed by MaineDOT and provided to GEI.
4. As-drilled boring locations for borings BB-PSB-201 through BB-PSB-202A were located using tape ties and should be considered accurate to the degree implied.

PLAN

25 0 25 50
Scale of Feet

STATE OF MAINE
DEPARTMENT OF TRANSPORTATION

APPROVED | DATE

COMMISSIONER:

CHIEF ENGINEER:

PROJ. MANAGER	M. JOHNESCU		
DESIGN-DETAILED	M. JOHNESCU	BY: Y. SOJO	DATE: 7/17/2025
CHECKED-REVIEWED	M. JOHNESCU	N. BETANCUR	8/15/2025
DESIGN2-DETAILED2			
DESIGN3-DETAILED3			
REVISIONS 1			
REVISIONS 2			
REVISIONS 3			
REVISIONS 4			
FIELD CHANGES			

SIGNATURE

P.E. NUMBER

DATE

BRIDGE NO. 2774
CROSSING SMELT BROOK
PERRY

BORING LOCATION PLAN

SHEET NUMBER

5

OF 35

Filename: ...\SHT\002_GeoPlan-Perry.dgn Division: Username: SOJO YONATHAN Date:8/5/2025

Filename: B:\Working\THORNTON TOMASETTI\2502334 MaineDOT Downeast Bridges Phase II\00__CAD\DGN\02__Perry\SHT\002__GeoPlan-Perry.dgn

NOTES
1) Profile developed from electronic files (Profile.dgn) provided to GEI by Thornton Tomasetti on May 22, 2025 and electronic files (Profile_Route 1.dgn) provided to GEI by Thornton Tomasetti on June 31, 2025.
2) As-drilled boring locations for borings BB-PSB-101 through BB-PSB-103 were surveyed by MaineDOT and provided to GEI.
3) As-drilled boring locations for borings BB-PSB-201 through BB-PSB-202A were located using tape ties and should be considered accurate to the degree implied.
4) Boring BB-PSB-202 is not shown since offset boring BB-PSB-202A was drilled approximately 2 feet away. Boring BB-PSB-202A shown in the profile contains the blow counts from boring BB-PSB-202 since boring BB-PSB-202A was drilled straight down to bedrock without performing SPTs.
5) This generalized interpretive soil profile is intended to convey trends in subsurface conditions. The boundaries between strata are approximate and idealized, and have been developed by interpretations of widely spaced explorations and samples. Actual soil transitions may vary and are probably more erratic. For more information refer to the boring logs.

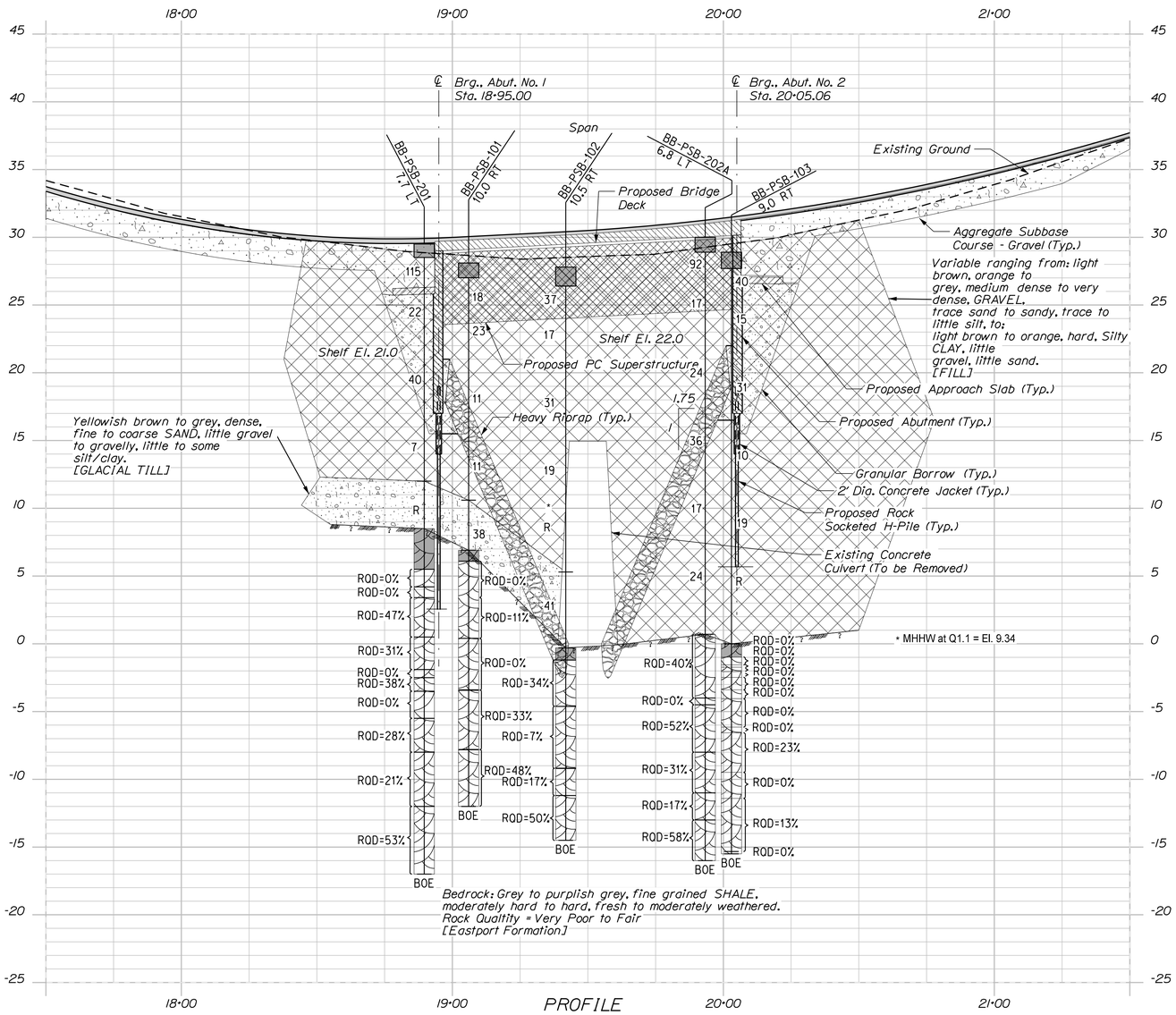

ELEVATION (NAVD88)

LEGEND

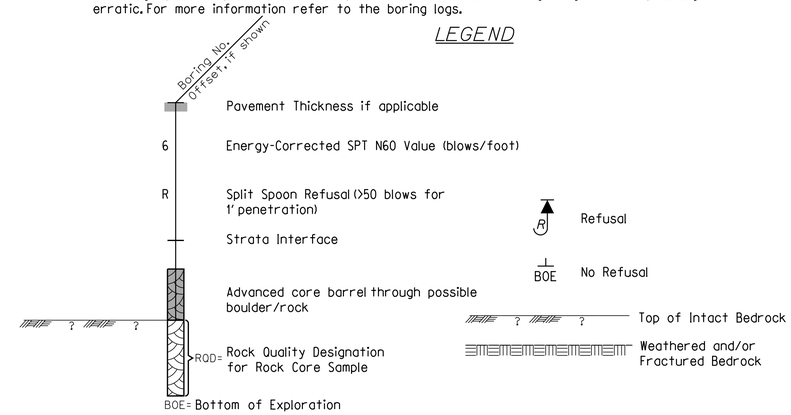

PROFILE

HORIZ 25 0 25 50
VERT 5 0 5 10
SCALE

STATE OF MAINE
DEPARTMENT OF TRANSPORTATION

APPROVED	DATE
COMMISSIONER:	
CHIEF ENGINEER:	

	BY	DATE
PROJ MANAGER	M. JOHNESCU	
DESIGN-DETAILED	M. JOHNESCU	Y. SOJO	7/17/2025
CHECKED-REVIEWED	M. JOHNESCU	N. BETANCUR	8/15/2025
DESIGN2-DETAILED2		
DESIGN3-DETAILED3		
REVISIONS 1		
REVISIONS 2		
REVISIONS 3		
REVISIONS 4		
FIELD CHANGES		

SIGNATURE
P.E. NUMBER
DATE

BRIDGE NO. 2774
CROSSING SMELT BROOK
PERRY

INTERPRETIVE SUBSURFACE PROFILE

SHEET NUMBER
6
OF 35

Filename: ...\SHT\003_GeoProfile-Perry.dgn Division: Username: SOJO YONATHAN Date:8/5/2025

Filename: B:\Working\THORNTON TOMASETTI\2502334 MaineDOT Downeast Bridges Phase II\00__CAD\DGN\02__Perry\SHT\003__GeoProfile-Perry.dgn

Filename: ...\SHT\007_BoringsLog.dgn Division: Username: common Date:8/5/2025

Maine Department of Transportation — Soil/Rock Exploration Log — US CUSTOMARY UNITS

Project: Smelt Brook Bridge (#2774) carrying Route 1 over Smelt Brook
Location: Perry, Maine
Boring No.: BB-PSB-101
WIN: 026630.07

Driller:	New England Boring Contractors	Elevation (ft.)	28.1	Auger ID/OD	5" Solid Stem Auger
Operator:	G. McDougal	Datum	NAVD88	Sampler	Standard 2" and 3" Split Spoon
Logged By:	M. Schoaff	Rig Type	Mobile B-53	Hammer Wt./Fall:	140 lbs/30"
Date Start/Finish:	4/17/2024 - 4/18/2024	Drilling Method	Drive & Wash	Core Barrel:	NQ-2"
Boring Location:	N 409615.8, E 2496331.3	Casing ID/OD:	HW-4" & NW-3"	Water Level*:	18.7 ft bgs
Hammer Efficiency Factor: 0.765		Hammer Type:	Automatic ☒ Hydraulic ☐ Rope & Cathead ☐		

Definitions:
D = Split Spoon Sample
MD = Unsuccessful Split Spoon Sample Attempt
U = Thin Wall Tube Sample
MU = Unsuccessful Thin Wall Tube Sample Attempt
V = Field Vane Shear Test, PP = Pocket Penetrometer
MV = Unsuccessful Field Vane Shear Test Attempt
R = Rock Core Sample
SSA = Solid Stem Auger
HSA = Hollow Stem Auger
RC = Roller Cone
WOH = Weight of 140lb. Hammer
WOR/C = Weight of Rods or Casing
WO1P = Weight of One Person
S_u = Peak/Remolded Field Vane Undrained Shear Strength (psf)
$S_{u(lab)}$ = Lab Vane Shear Strength (psf)
q_p = Unconfined Compressive Strength (ksf)
N-uncorrected = Raw Field SPT N-value
Hammer Efficiency Factor = Rig Specific Annual Calibration Value
N_{60} = SPT N-uncorrected Corrected for Hammer Efficiency
$N_{60(1)}$ = N_{60} Corrected for Overburden Pressure
T_v = Pocket Torvane Shear Strength (psf)
WC = Water Content, percent
LL = Liquid Limit
PL = Plastic Limit
PI = Plasticity Index
G = Grain Size Analysis
C = Consolidation Test

Depth (ft.)	Sample No.	Pen./Rec. (in.)	Sample Depth (ft.)	Blows (/6 in.) Shear Strength (psf) q_p RQD (%)	N-uncorrected	N_{60}	Casing Blows	Elevation (ft.)	Visual Description and Remarks	Laboratory Testing Results/ AASHTO and Unified Class
0							SSA	27.0	12" ASPHALT (1.1)	
	1D	24/11	1.5 - 3.5	9/9/5/7	14	18			Brown and grey, damp, very stiff, SILT, some sand, some gravel, (Fill).	A-4(0), ML WC=12.6%
5	2D	24/5	4.0 - 6.0	6/10/8/16	18	23	14		Brown and grey, damp, medium dense, fine to coarse SAND, some gravel, little silt, (Fill). 112 blows for 0.4 ft.	
							88			
							84			
							57			
							57			
10	3D	24/2	9.0 - 11.0	6/4/5/3	9	11	19		Brown and grey, moist, medium dense, GRAVEL, little sand, trace silt, (Fill). Poor recovery with 2-inch spoon. Ran a 3-inch spoon at the same interval and recovered a 2.5-inch rock in tip of 3-inch spoon.	
							24			
							42			
							97			
							103			
15	4D	24/1	14.0 - 16.0	12/5/4/4	9	11	19		Brown and grey, moist, medium dense, GRAVEL, some sand, trace silt, (Fill). Poor recovery with 2-inch spoon. Ran a 3-inch spoon at the same interval and recovered a 11-inch of material.	A-1-a, GW WC=13.0%
							34			
							31			
							101			
							117			
20	5D	24/11	19.0 - 21.0	20/12/18/26	30	38	60		Yellowish brown and grey, wet, dense, Gravelly SAND, little silt, (Glacial Till).	A-1-b, GM WC=12.6%
							108			
							RC			
	R1	32/32	22.0 - 24.7	RQD = 0%			ND			
25	R2	36/36	24.7 - 27.7	RQD = 11%						
	R3	46/46	27.7 - 31.5	RQD = 0%						
30	R4	53/52	31.5 - 35.9	RQD = 33%						
35	R5	50/50	35.9 - 40.1	RQD = 48%						
40										
45										
50										

Approximate Top of Bedrock at Elev. 6.9 ft.
Roller Cone ahead to 22 ft bgs.
R1: Bedrock: Grey, fine grained SHALE, mod. hard to hard, fresh to slightly weathered, low angle to vertical, very close to close, tight to open joints with silt infilling.
[Eastport Formation]
Rock Quality: Very Poor
100% Recovery
R1: Core Times (min sec)
22.0-23.0 ft (3:43)
23.0-24.0 ft (4:16)
R2: 0-24.7 ft (4:59)
24.7-25.7 ft: Grey, fine grained SHALE, mod. hard to hard, slightly weathered, low angle to steep, very close to close, tight to open joints with silt infilling.
[Eastport Formation]
Rock Quality: Very Poor
100% Recovery
R2: Core Times (min sec)
24.7-25.7 ft (6:06)
25.7-26.7 ft (5:45)
26.7-27.7 ft (9:08)
R3: Bedrock: Grey, fine grained SHALE, mod. hard to hard, fresh to slightly weathered, low angle to steep, very close to close, tight to open joints with silt infilling. Granite intrusion at 38'.
[Eastport Formation]
Rock Quality: Very Poor
100% Recovery
R3: Core Times (min sec)
27.7-28.7 ft (3:30)
28.7-29.7 ft (3:50)
29.7-30.7 ft (2:16)
30.7-31.7 ft (2:50)
R4: Bedrock: Grey, fine grained SHALE, mod. hard to hard, fresh to slightly weathered, low angle to vertical, very close to close, tight to open joints with silt infilling.
[Eastport Formation]
Rock Quality: Poor
98% Recovery
R4: Core Times (min sec)
31.5-32.5 ft (4:08)
32.5-33.5 ft (3:20)
33.5-34.5 ft (2:43)
34.5-35.5 ft (2:44)
35.5-35.9 ft (2:12)
R5: Bedrock: Grey, fine grained SHALE, mod. hard to hard, fresh to slightly weathered, low angle to vertical, very close to close, tight to open joints with silt infilling.
[Eastport Formation]
Rock Quality: Poor
100% Recovery
R5: Core Times (min sec)
35.9-36.9 ft (2:01)
36.9-37.9 ft (2:20)
37.9-38.9 ft (2:02)
38.9-39.9 ft (1:47)
39.9-40.1 ft (1:30)
Bottom of Exploration at 40.1 feet below ground surface.

q_p = 936 ksf
q_p = 1386 ksf

Remarks:
1. Automatic hammer NEBC D-28. Energy Transfer Ratio = 0.765
2. Water level measured at beginning of shift on 4/18 at 7:42.
3. Borehole backfilled with bentonite chips, soil, and gravel. Patched with cold patch asphalt.

Stratification lines represent approximate boundaries between soil types; transitions may be gradual.
* Water level readings have been made at times and under conditions stated. Groundwater fluctuations may occur due to conditions other than those present at the time measurements were made.

Page 1 of 1
Boring No.: BB-PSB-101

Maine Department of Transportation — Soil/Rock Exploration Log — US CUSTOMARY UNITS

Project: Smelt Brook Bridge (#2774) carrying Route 1 over Smelt Brook
Location: Perry, Maine
Boring No.: BB-PSB-102
WIN: 026630.07

Driller:	New England Boring Contractors	Elevation (ft.)	27.0	Auger ID/OD	5" Solid Stem Auger
Operator:	G. McDougal	Datum	NAVD88	Sampler	Standard 2" and 3" Split Spoon
Logged By:	M. Schoaff	Rig Type	Mobile B-53	Hammer Wt./Fall:	140 lbs/30"
Date Start/Finish:	4/16/2024 - 4/17/2024	Drilling Method	Drive & Wash	Core Barrel:	NQ-2"
Boring Location:	N 409632.5, E 2496363.1	Casing ID/OD:	4.00"/4.50" (HW-4")	Water Level*:	Not Encountered
Hammer Efficiency Factor: 0.765		Hammer Type:	Automatic ☒ Hydraulic ☐ Rope & Cathead ☐		

Definitions:
D = Split Spoon Sample
MD = Unsuccessful Split Spoon Sample Attempt
U = Thin Wall Tube Sample
MU = Unsuccessful Thin Wall Tube Sample Attempt
V = Field Vane Shear Test, PP = Pocket Penetrometer
MV = Unsuccessful Field Vane Shear Test Attempt
R = Rock Core Sample
SSA = Solid Stem Auger
HSA = Hollow Stem Auger
RC = Roller Cone
WOH = Weight of 140lb. Hammer
WOR/C = Weight of Rods or Casing
WO1P = Weight of One Person
S_u = Peak/Remolded Field Vane Undrained Shear Strength (psf)
$S_{u(lab)}$ = Lab Vane Shear Strength (psf)
q_p = Unconfined Compressive Strength (ksf)
N-uncorrected = Raw Field SPT N-value
Hammer Efficiency Factor = Rig Specific Annual Calibration Value
N_{60} = SPT N-uncorrected Corrected for Hammer Efficiency
$N_{60(1)}$ = N_{60} Corrected for Overburden Pressure
T_v = Pocket Torvane Shear Strength (psf)
WC = Water Content, percent
LL = Liquid Limit
PL = Plastic Limit
PI = Plasticity Index
G = Grain Size Analysis
C = Consolidation Test

Depth (ft.)	Sample No.	Pen./Rec. (in.)	Sample Depth (ft.)	Blows (/6 in.) Shear Strength (psf) q_p RQD (%)	N-uncorrected	N_{60}	Casing Blows	Elevation (ft.)	Visual Description and Remarks	Laboratory Testing Results/ AASHTO and Unified Class
0							SSA	26.4	17" ASPHALT (1.4)	
	1D	24/8	1.4 - 3.4	11/16/13/12	29	37			Brown and grey, damp, dense, fine to coarse SAND, some gravel, trace silt, (Fill).	
5	2D	24/10	4.0 - 6.0	7/6/7/8	13	17	25		Yellowish brown and grey, moist, very stiff, Silty CLAY, little gravel, little sand, (FILL).	A-7-6, CL WC=21.5% LL=40.1 PL=22.9 PI=17.2
							31			
							98			
							126			
							82			
10	3D	24/5	9.0 - 11.0	15/9/15/13	24	31	46		Grey, wet, dense, GRAVEL, little coarse sand, trace silt, (Fill).	
							54			
							69			
							49			
							41			
15	4D	24/4	14.0 - 16.0	7/7/8/7	15	19	23		Grey and brown, wet, medium dense, GRAVEL, little sand, little silt, (Fill). Poor recovery with 2-inch spoon. Ran a 3-inch spoon at the same interval and recovered a 2-inch gravel in tip of 3-inch spoon.	
							35			
							57			
							122			
							162			
20	5D	5/4	19.0 - 19.4	50(5")/	--	--	162		Grey, wet, GRAVEL, little sand, (Fill). Poor recovery with 2-inch spoon. Ran a 3-inch spoon at the same interval and recovered a 2-inch gravel in tip of 3-inch spoon.	
							83			
							55			
							74			
							97			
25	6D	24/24	24.0 - 26.0	18/17/15/36	32	41	43		Yellowish brown and grey, wet, dense, Gravelly SAND, little silt, (Glacial Till). Poor recovery with 2-inch spoon. Ran a 3-inch spoon at the same interval and recovered a 12-inch of material.	A-1-b, GM WC=12.0%
							99			
							76			
							179			
							301		130 blows for 0.1 ft. Wall ahead to 29 ft bgs.	
30	R1	41/40	29.0 - 32.4	RQD = 34%			ND		Approximate Top of Bedrock at Elev. -0.3 ft. R1: Bedrock: Purplish grey, fine grained SHALE, hard, fresh to slightly weathered, low angle to steep, very close to close, tight to open joints with silt infilling. [Eastport Formation] Rock Quality: Poor 80% Recovery R1: Core Times (min sec) 29.0-30.0 ft (3:17) 30.0-31.0 ft (4:12) 31.0-32.0 ft (3:44) 32.0-32.4 ft (2:52) R2: Bedrock: Purplish grey, fine grained SHALE, hard, fresh to very slightly weathered, low angle to steep, very close to close, tight joints with silt infilling. [Eastport Formation] Rock Quality: Very Poor 100% Recovery R2: Core Times (min sec) 32.4-33.4 ft (5:01) 33.4-34.4 ft (3:28) 34.4-35.4 ft (3:09) 35.4-36.4 ft (2:57) 36.4-37.0 ft (2:21) R3: Bedrock: Purplish grey to grey, fine grained SHALE, hard, fresh to very slightly weathered, low angle to steep, very close to close, tight joints with silt infilling. [Eastport Formation] Rock Quality: Very Poor 92% Recovery R3: Core Times (min sec) 37.0-38.0 ft (3:18) 38.0-39.0 ft (2:35) R4: Bedrock: Purplish grey to grey, fine grained SHALE, hard, fresh to very slightly weathered, low angle to steep, very close to close, tight to open joints with silt infilling. [Eastport Formation] Rock Quality: Poor 95% Recovery R4: Core Times (min sec) 39.0-39.3 ft (2:07) 39.3-40.3 ft (5:12) 40.3-41.3 ft (5:06) 41.3-42.3 ft (4:59) Bottom of Exploration at 42.3 feet below ground surface.	
	R2	55/55	32.4 - 37.0	RQD = 7%						
35	R3	24/22	37.0 - 39.0	RQD = 17%						
40	R4	40/38	39.0 - 42.3	RQD = 50%						
45										
50										

q_p = 636 ksf

Remarks:
1. Automatic hammer NEBC D-28. Energy Transfer Ratio = 0.765
2. Borehole backfilled with gravel and patched with cold patch asphalt.

Stratification lines represent approximate boundaries between soil types; transitions may be gradual.
* Water level readings have been made at times and under conditions stated. Groundwater fluctuations may occur due to conditions other than those present at the time measurements were made.

Page 1 of 1
Boring No.: BB-PSB-102

Maine Department of Transportation — Soil/Rock Exploration Log — US CUSTOMARY UNITS

Project: Smelt Brook Bridge (#2774) carrying Route 1 over Smelt Brook
Location: Perry, Maine
Boring No.: BB-PSB-103
WIN: 026630.07

Driller:	New England Boring Contractors	Elevation (ft.)	28.9	Auger ID/OD	5" Solid Stem Auger
Operator:	G. McDougal	Datum	NAVD88	Sampler	Standard Split Spoon
Logged By:	M. Schoaff	Rig Type	Mobile B-53	Hammer Wt./Fall:	140 lbs/30"
Date Start/Finish:	4/12/2024 - 4/16/2024	Drilling Method	Drive & Wash	Core Barrel:	NQ-2"
Boring Location:	N 409659.8, E 2496416.9	Casing ID/OD:	HW-4" & NW-3"	Water Level*:	24.3 ft bgs
Hammer Efficiency Factor: 0.765		Hammer Type:	Automatic ☒ Hydraulic ☐ Rope & Cathead ☐		

Definitions:
D = Split Spoon Sample
MD = Unsuccessful Split Spoon Sample Attempt
U = Thin Wall Tube Sample
MU = Unsuccessful Thin Wall Tube Sample Attempt
V = Field Vane Shear Test, PP = Pocket Penetrometer
MV = Unsuccessful Field Vane Shear Test Attempt
R = Rock Core Sample
SSA = Solid Stem Auger
HSA = Hollow Stem Auger
RC = Roller Cone
WOH = Weight of 140lb. Hammer
WOR/C = Weight of Rods or Casing
WO1P = Weight of One Person
S_u = Peak/Remolded Field Vane Undrained Shear Strength (psf)
$S_{u(lab)}$ = Lab Vane Shear Strength (psf)
q_p = Unconfined Compressive Strength (ksf)
N-uncorrected = Raw Field SPT N-value
Hammer Efficiency Factor = Rig Specific Annual Calibration Value
N_{60} = SPT N-uncorrected Corrected for Hammer Efficiency
$N_{60(1)}$ = N_{60} Corrected for Overburden Pressure
T_v = Pocket Torvane Shear Strength (psf)
WC = Water Content, percent
LL = Liquid Limit
PL = Plastic Limit
PI = Plasticity Index
G = Grain Size Analysis
C = Consolidation Test

Depth (ft.)	Sample No.	Pen./Rec. (in.)	Sample Depth (ft.)	Blows (/6 in.) Shear Strength (psf) q_p RQD (%)	N-uncorrected	N_{60}	Casing Blows	Elevation (ft.)	Visual Description and Remarks	Laboratory Testing Results/ AASHTO and Unified Class
0							SSA	27.7	14" ASPHALT (1.2)	
	1D	24/9	1.2 - 3.2	17/20/11/20	31	40			Brown and grey, damp, dense, fine to coarse SAND, some gravel, little silt, (Fill).	
							54			
5	2D	24/4	4.0 - 6.0	7/7/5/5	12	15	33		Brown, wet, medium dense, Gravelly fine to coarse SAND, some silt, (Fill).	
							31			
							23			
							35			
							34			
10	3D	24/1	9.0 - 11.0	9/9/15/13	24	31	15		Grey and reddish brown, wet, dense, GRAVEL, (Fill).	A-1-a, GP WC=0.5%
							41			
							29			
							34			
							41			
15	4D	24/1	14.0 - 16.0	6/4/4/4	8	10	17		Gravel in tip.	
							30			
							61			
							44			
							52			
20	5D	24/1	19.0 - 21.0	11/7/8/8	15	19	15		Grey, wet, medium dense, GRAVEL, trace silt, (Fill).	
							60			
							52			
							48			
							103			
25	6D	7/0	24.0 - 24.6	46/50(2")/	--	--	39		No recovery. Roll ahead of casing 24 to 29.9 ft bgs. No returns from 24 to 29.0 ft bgs when rolling ahead. Probable boulder/cobble 24.7 to 25.1 ft bgs.	
							63			
							72		Probable boulder/cobble 27.0 to 27.7 ft bgs.	
							89			
							126		Wood chips in returns at 28.3 ft bgs when washing out casing.	
30	R0 R1	0/0 7/6	29.9 - 29.9	50(0")/ RQD = 0%			571		Approximate Top of Bedrock at Elev. 0.0 ft. Roll ahead to 29.9 ft bgs. R1: Bedrock: Grey,	
	R2 R3	2/0 4/4	29.9 - 30.5	RQD = 0% RQD = 0%			ND		R1: Bedrock: Purplish grey to grey, fine grained SHALE, mod. hard, slightly weathered, mod. dipping to steep, close, tight joints with silt infilling. [Eastport Formation] Rock Quality: Very Poor 86% Recovery R1: Core Times (min sec) 29.9-30.5 ft (10:31) R2: No recovery R2: Core Times (min sec) 30.5-30.7 ft (3:06) R3: Bedrock: Purplish grey to grey, fine grained SHALE, mod. hard, slightly weathered, mod. dipping to steep, very close, open joints with silt infilling. [Eastport Formation] Rock Quality: Very Poor 100% Recovery R3: Core Times (min sec) 30.7-31.0 ft (4:25) R4: Bedrock: Purplish grey to grey, fine grained SHALE, mod. hard, moderate weathered, low angle to vertical, very close, tight to open joints with clay infilling. [Eastport Formation] Rock Quality: Very Poor 100% Recovery R4: Core Times (min sec) 31.0-31.4 ft (3:03) R5: Bedrock: Purplish grey to grey, fine grained SHALE, hard, slightly weathered, horizontal to steep, very close to close, tight to open joints with silt infilling. [Eastport Formation] Rock Quality: Very Poor 75% Recovery R5: Core Times (min sec) 31.4-32.3 ft (11:55) R6: Bedrock: Purplish grey to grey, fine grained SHALE, hard, slightly weathered, horizontal to steep, very close to close, tight to open joints with silt infilling. [Eastport Formation] Rock Quality: Very Poor 100% Recovery R6: Core Times (min sec) 32.3-33.0 ft (7:28) R7: Bedrock: Purplish grey to grey, fine grained SHALE, mod. hard to hard, slightly weathered, horizontal to steep, very close, tight to open joints with silt infilling. [Eastport Formation] Rock Quality: Very Poor	
	R4 R5	5/5 (1/8)	30.7 - 31.0	RQD = 0% RQD = 0%						
	R6	8/8	31.0 - 31.4	RQD = 0%						
	R7	25/25	31.4 - 32.3	RQD = 0%						
35	R8 R9	5/4 35/35	32.3 - 33.0 35.1 - 35.5	RQD = 0% RQD = 23%						
	R10	23/23	38.4 - 40.3	RQD = 0%						
40	R11	47/46	40.3 - 44.2	RQD = 13%						
	R12	2/0	44.2 - 44.4	RQD = 0%						
45										
50										

Remarks:
1. Automatic hammer NEBC D-28. Energy Transfer Ratio = 0.765
2. Water level in boring measured before drilling activities on 4/16/24 at 8:00.
3. Borehole backfilled with gravel and patched with cold patch asphalt.

Stratification lines represent approximate boundaries between soil types; transitions may be gradual.
* Water level readings have been made at times and under conditions stated. Groundwater fluctuations may occur due to conditions other than those present at the time measurements were made.

Page 1 of 2
Boring No.: BB-PSB-103

Maine Department of Transportation — Soil/Rock Exploration Log — US CUSTOMARY UNITS

Project: Smelt Brook Bridge (#2774) carrying Route 1 over Smelt Brook
Location: Perry, Maine
Boring No.: BB-PSB-103
WIN: 026630.07

Driller:	New England Boring Contractors	Elevation (ft.)	28.9	Auger ID/OD	5" Solid Stem Auger
Operator:	G. McDougal	Datum	NAVD88	Sampler	Standard Split Spoon
Logged By:	M. Schoaff	Rig Type	Mobile B-53	Hammer Wt./Fall:	140 lbs/30"
Date Start/Finish:	4/12/2024 - 4/16/2024	Drilling Method	Drive & Wash	Core Barrel:	NQ-2"
Boring Location:	N 409659.8, E 2496416.9	Casing ID/OD:	HW-4" & NW-3"	Water Level*:	24.3 ft bgs
Hammer Efficiency Factor: 0.765		Hammer Type:	Automatic ☒ Hydraulic ☐ Rope & Cathead ☐		

Definitions:
D = Split Spoon Sample
MD = Unsuccessful Split Spoon Sample Attempt
U = Thin Wall Tube Sample
MU = Unsuccessful Thin Wall Tube Sample Attempt
V = Field Vane Shear Test, PP = Pocket Penetrometer
MV = Unsuccessful Field Vane Shear Test Attempt
R = Rock Core Sample
SSA = Solid Stem Auger
HSA = Hollow Stem Auger
RC = Roller Cone
WOH = Weight of 140lb. Hammer
WOR/C = Weight of Rods or Casing
WO1P = Weight of One Person
S_u = Peak/Remolded Field Vane Undrained Shear Strength (psf)
$S_{u(lab)}$ = Lab Vane Shear Strength (psf)
q_p = Unconfined Compressive Strength (ksf)
N-uncorrected = Raw Field SPT N-value
Hammer Efficiency Factor = Rig Specific Annual Calibration Value
N_{60} = SPT N-uncorrected Corrected for Hammer Efficiency
$N_{60(1)}$ = N_{60} Corrected for Overburden Pressure
T_v = Pocket Torvane Shear Strength (psf)
WC = Water Content, percent
LL = Liquid Limit
PL = Plastic Limit
PI = Plasticity Index
G = Grain Size Analysis
C = Consolidation Test

Depth (ft.)	Sample No.	Pen./Rec. (in.)	Sample Depth (ft.)	Blows (/6 in.) Shear Strength (psf) q_p RQD (%)	N-uncorrected	N_{60}	Casing Blows	Elevation (ft.)	Visual Description and Remarks	Laboratory Testing Results/ AASHTO and Unified Class
50									100% Recovery R2: Core Times (min sec) 33.0-34.0 ft (8:27) 34.0-35.0 ft (11:22) 35.0-35.1 ft (3:20) R3: Bedrock: Purplish grey to grey, fine grained SHALE, mod. hard to hard, slightly weathered, horizontal to steep, very close, tight to open joints with silt infilling. [Eastport Formation] Rock Quality: Very Poor 80% Recovery R3: Core Times (min sec) 35.1-35.5 ft (3:52) R4: Bedrock: Purplish grey to grey, fine grained SHALE, mod. hard to hard, slightly weathered, low angle to steep, very close to close, tight to open joints with silt infilling. [Eastport Formation] Rock Quality: Very Poor 100% Recovery R4: Core Times (min sec) 35.5-36.5 ft (8:04) 36.5-37.5 ft (9:55) 37.5-38.4 ft (6:57) R10: Bedrock: Purplish grey to grey, fine grained SHALE, mod. hard to hard, slightly weathered, low angle to steep, very close to close, tight joints with silt infilling. [Eastport Formation] Rock Quality: Very Poor 100% Recovery R10: Core Times (min sec) 38.4-38.5 ft (0:37) 38.5-39.5 ft (8:00) 39.5-40.3 ft (9:43) R11: Bedrock: Purplish grey to grey, fine grained SHALE, hard, slightly weathered, low angle to mod. dipping, very close to close, tight to open joints with silt infilling. [Eastport Formation] Rock Quality: Very Poor 100% Recovery R11: Core Times (min sec) 40.3-41.3 ft (7:52) 41.3-42.3 ft (2:43) 42.3-43.3 ft (2:18) 43.3-44.2 ft (2:48) R12: No Recovery R12: Core Times (min sec) 44.2-44.4 ft (1:49) Bottom of Exploration at 44.4 feet below ground surface.	
55										
60										
65										
70										
75										

Remarks:
1. Automatic hammer NEBC D-28. Energy Transfer Ratio = 0.765
2. Water level in boring measured before drilling activities on 4/16/24 at 8:00.
3. Borehole backfilled with gravel and patched with cold patch asphalt.

Stratification lines represent approximate boundaries between soil types; transitions may be gradual.
* Water level readings have been made at times and under conditions stated. Groundwater fluctuations may occur due to conditions other than those present at the time measurements were made.

Page 2 of 2
Boring No.: BB-PSB-103

STATE OF MAINE
DEPARTMENT OF TRANSPORTATION

		DATE
APPROVED		
COMMISSIONER:		
CHIEF ENGINEER:		

			DATE
PROJ. MANAGER	M. JOHNESCU	BY	
DESIGN-DETAILED	M. JOHNESCU	V. SOJO	7/17/2025
CHECKED-REVIEWED	M. JOHNESCU	N. BETANCUR	8/4/2025
DESIGN2-DETAILED2	M. JOHNESCU		
DESIGN3-DETAILED3			
REVISIONS 1			
REVISIONS 2			
REVISIONS 3			
REVISIONS 4			
FIELD CHANGES			

SIGNATURE
P.E. NUMBER
DATE

BRIDGE NO. 2774
CROSSING SMELT BROOK
PERRY

BORING LOGS (1 OF 2)

SHEET NUMBER
7
OF 35

Filename: B:\Working\THORNTON TOMASETTI\2502334 MaineDOT Downeast Bridges Phase II\00__CAD\DGN\02__Perry\SHT\007__BoringsLog.dgn

Maine Department of Transportation
Soil/Rock Exploration Log
US CUSTOMARY UNITS

Project: Smelt Brook Bridge (#2774) carrying Route 1 over Smelt Brook
Location: Perry, Maine
Boring No.: BB-PSB-201
WIN: 026630.07

Driller:	New England Boring Contractors	Elevation (ft.)	29.5	Auger ID/OD:	5'' Solid Stem Auger
Operator:	B. Enos	Datum:	NAVD88	Sampler:	Standard Split Spoon
Logged By:	S. Carvajal	Rig Type:	Mobile B-53	Hammer Wt./Fall:	140 lbs/30''
Date Start/Finish:	5/14/25 - 5/14/25	Drilling Method:	Drive & Wash	Core Barrel:	NQ-2''
Boring Location:	N: 409622.9, E: 2496308.3	Casing ID/OD:	HW-4'' & NW-3'	Water Level*:	NM
Hammer Efficiency Factor: 0.834		Hammer Type:	Automatic ☒ Hydraulic ☐ Rope & Cathead ☐		

Definitions:
D = Split Spoon Sample
MD = Unsuccessful Split Spoon Sample Attempt
U = Thin Wall Tube Sample
MU = Unsuccessful Thin Wall Tube Sample Attempt
V = Field Vane Shear Test, PP = Pocket Penetrometer
MV = Unsuccessful Field Vane Shear Test Attempt
R = Rock Core Sample
SSA = Solid Stem Auger
HSA = Hollow Stem Auger
RC = Roller Cone
WOH = weight of 140lb. hammer
WOR/C = Weight of Rods or Casing
WO1P = Weight of One Person
$S_{u/r}$ = Peak/Remolded Field Vane Undrained Shear Strength (psf)
$S_{u(lab)}$ = Lab Vane Shear Strength (psf)
q_p = Unconfined Compressive Strength (ksf)
N-uncorrected = Raw Field SPT N-value
Hammer Efficiency Factor = Rig Specific Annual Calibration Value
N_{60} = SPT N-uncorrected Corrected for Hammer Efficiency
N_{60} = (Hammer Efficiency Factor/60%)*N-uncorrected
T_v = Pocket Torvane Shear Strength (psf)
WC = Water Content, percent
LL = Liquid Limit
PL = Plastic Limit
PI = Plasticity Index
G = Grain Size Analysis
C = Consolidation Test

Sample Information

Sample No.	Pen./Rec. (in.)	Sample Depth (ft.)	Blows (/6 in.) Shear Strength (psf) or RQD (%)	N-uncorrected	N_{60}
1D	24/24	1.0 - 3.0	59/48/35/27	83	115
2D	24/6	4.0 - 6.0	7/7/9/22	16	22
3D	24/8	9.0 - 11.0	7/18/11/7	29	40
4D	24/3	14.0 - 16.0	2/2/3/4	5	7
5D	15/9	19.0 - 20.3	6/31/50(3'')	--	--
R1	16/14	24.0 - 25.3	RQD = 0%		
R2	10/10	25.3 - 26.1	RQD = 0%		
R3	35/32	26.1 - 29.0	RQD = 47%		
R4	29/27	29.0 - 31.4	RQD = 31%		
R5	7/7	31.4 - 32.0	RQD = 0%		
R6	12/11	32.0 - 33.0	RQD = 38%		
R7	24/7	33.0 - 35.0	RQD = 0%		
R8	30/30	35.0 - 37.5	RQD = 28%		
R9	48/44	37.5 - 41.5	RQD = 21%		
R10	60/58	41.5 - 46.5	RQD = 53%		

Casing Blows: SSA, SPIN, SPIN, 65, 83, 60*, 37, 36, 38, 20, 34, 34, 48, 61, 71, 57, 91, 146* RC, CORE

Elevation (ft.): 28.5, 12.0, 9.0, -17.0

Visual Description and Remarks / Laboratory Testing Results/ AASHTO and Unified Class:

12'' ASPHALT (1.0)

Dark to light brown to grey, dry, very dense, fine to coarse SAND, some gravel, trace silt, hydrocarbon odor, (Fill).

Light brown, grey, medium dense, Sandy GRAVEL, trace silt, hydrocarbon odor, (Fill). — A-1-a, GW-GM WC=2.3%

*60 blows for 0.9 ft.

Light brown to orange, wet, hard, Silty CLAY, little gravel, little sand, (Fill). Roll ahead of casing to 14 ft. — A-6, CL WC=20.1% LL=38.2 PL=23.5 PI=14.7

Grey, wet, medium stiff, SILT, little gravel, (Fill).

(17.5)

Grey, wet, fine to coarse SAND, some silt, little gravel, trace clay (Glacial Till). — A-2(0), SM WC=12.4%
*146 blows for 0.5 ft.

(20.5)

Approximate Top of Bedrock at Elev. 9.0 ft.
Roller Cone to 24 ft.
Rattling from 20.6 to 24 feet.

R1: Bedrock: Purplish grey to grey, fine grained, SHALE, mod. hard, fresh to slightly weathered. Joints are mod. dipping, very close to close, tight to open with brown silt infilling.
[Eastport Formation]
Rock Quality: Very Poor
88% Recovery
R1: Core Times (min:sec)
24.0 - 25.0 ft (3:02)
25.0 - 25.3 ft (4:08)
R2: Bedrock: Purplish grey to grey, fine grained, SHALE, mod. hard, fresh to slightly weathered. Joint is mod. dipping, very close to close, open. Conglomerate 25.9-26.1 ft.
[Eastport Formation]
Rock Quality: Very Poor
100% Recovery
R2: Core Times (min:sec)
25.3 - 26.1 ft (3:34)
R3: Bedrock: Purplish grey to grey, fine grained, SHALE, mod. hard to hard, fresh. Joints are low angle to steep, very close to close, tight to open. Conglomerate 26.1-26.4 ft.
[Eastport Formation]
Rock Quality: Poor
91% Recovery
R3: Core Times (min:sec)
26.1 - 27.1 ft (2:49)
27.1 - 27.1 ft (3:01)
28.1 - 29.0 ft (2:11)
R4: Bedrock: Purplish grey to greenish grey, fine grained, SHALE, mod. hard to hard, fresh. Joints are low angle to steep, very close to close, tight to open with sand and silt infilling.
[Eastport Formation]
Rock Quality: Poor
93% Recovery
R4: Core Times (min:sec)
29.0 - 30.0 ft (2:59)
30.0 - 31.0 ft (2:19)
31.0 - 31.4 ft (1:43)
R5: Bedrock: Greenish grey to grey, fine grained, SHALE, hard, fresh to slightly weathered. Crushed, calcite vein in bottom piece.
[Eastport Formation]
Rock Quality: Very Poor
100% Recovery
R5: Core Times (min:sec)
31.4 -32.0 ft (4:44)
R6: Bedrock: Greenish grey to grey, fine grained, SHALE, hard, fresh. Joints are low angle to mod dipping, very close to close, tight to open, slickensided.
[Eastport Formation]
Rock Quality: Poor
92% Recovery
R6: Core Times (min:sec)
32.0 - 33.0 ft (4:44)
R7: Bedrock: Grey, fine grained, SHALE, mod. hard to hard, fresh to slightly weathered. Rock is crushed, calcite intrusions.
[Eastport Formation]
Rock Quality: Very Poor
29% Recovery
R7: Core Times (min:sec)
33.0 - 34.0 ft (7:00)
34.0 - 35.0 ft (5:59)
R8: Bedrock: Light grey to dark grey, fine grained, SHALE, mod. hard to hard, fresh to mod. weathered. Joints are low angle to steep, very close to close, tight to open, grey sand infilling in bottom 1 foot, slickensided.
[Eastport Formation]
Rock Quality: Poor
100% Recovery
R8: Core Times (min:sec)
35.0 - 36.0 ft (3:52)
36.0 - 37.0 ft (1:09)
37.0 - 37.5 ft (1:29)
R9: Bedrock: Grey, fine grained, SHALE, mod. hard to hard, fresh to slightly weathered. Joints are low angle to steep, very close to close, tight to open, grey sand infilling in bottom 1 foot, slickensided. Calcite intrusions/ veins present.
[Eastport Formation]
Rock Quality: Very Poor
92% Recovery
R9: Core Times (min:sec)
37.5 - 38.5 ft (1:29)
38.5 - 39.5 ft (2:18)
39.5 - 40.5 ft (1:51)
40.5 - 41.5 ft (1:59)
R10: Bedrock: Grey, fine grained, SHALE, mod. hard to hard, fresh. Joints are horizontal to mod. dipping, very close to close, tight to open.
[Eastport Formation]
Rock Quality: Fair
97% Recovery
R10: Core Times (min:sec)
41.5 - 42.5 ft (2:44)
42.5 - 43.5 ft (2:03)
43.5 - 44.5 ft (2:44)
44.5 - 45.5 ft (2:22)
45.5 - 46.5 ft (2:21)
(46.5)
Bottom of Exploration at 46.5 feet below ground surface.

q_p=698

Remarks:
1. Automatic hammer NEBC D-23. Energy Transfer Ratio = 0.834.
2. Borehole backfilled with soil cuttings and gravel. Patched with cold patch asphalt.
3. The boring coordinates and elevation were estimated using tape ties and a topographic survey provided by MaineDOT, and should be considered accurate to the degree implied.

Stratification lines represent approximate boundaries between soil types; transitions may be gradual.
* Water level readings have been made at times and under conditions stated. Groundwater fluctuations may occur due to conditions other than those present at the time measurements were made.

Page 1 of 1
Boring No.: BB-PSB-201

Maine Department of Transportation
Soil/Rock Exploration Log
US CUSTOMARY UNITS

Project: Smelt Brook Bridge (#2774) carrying Route 1 over Smelt Brook
Location: Perry, Maine
Boring No.: BB-PSB-202
WIN: 026630.07

Driller:	New England Boring Contractors	Elevation (ft.)	30.0	Auger ID/OD:	5'' Solid Stem Auger
Operator:	B. Enos	Datum:	NAVD88	Sampler:	Standard Split Spoon
Logged By:	S. Carvajal	Rig Type:	Mobile B-53	Hammer Wt./Fall:	140 lbs/30''
Date Start/Finish:	5/15/25 - 5/15/25	Drilling Method:	Drive & Wash	Core Barrel:	NA
Boring Location:	N: 409673.9, E: 2496408.6	Casing ID/OD:	HW-4'' & NW-3'	Water Level*:	NM
Hammer Efficiency Factor: 0.834		Hammer Type:	Automatic ☒ Hydraulic ☐ Rope & Cathead ☐		

Definitions: D = Split Spoon Sample MD = Unsuccessful Split Spoon Sample Attempt U = Thin Wall Tube Sample MU = Unsuccessful Thin Wall Tube Sample Attempt V = Field Vane Shear Test, PP = Pocket Penetrometer MV = Unsuccessful Field Vane Shear Test Attempt R = Rock Core Sample SSA = Solid Stem Auger HSA = Hollow Stem Auger RC = Roller Cone WOH = weight of 140lb. hammer WOR/C = Weight of Rods or Casing WO1P = Weight of One Person $S_{u/r}$ = Peak/Remolded Field Vane Undrained Shear Strength (psf) $S_{u(lab)}$ = Lab Vane Shear Strength (psf) q_p = Unconfined Compressive Strength (ksf) N-uncorrected = Raw Field SPT N-value Hammer Efficiency Factor = Rig Specific Annual Calibration Value N_{60} = SPT N-uncorrected Corrected for Hammer Efficiency N_{60} = (Hammer Efficiency Factor/60%)*N-uncorrected T_v = Pocket Torvane Shear Strength (psf) WC = Water Content, percent LL = Liquid Limit PL = Plastic Limit PI = Plasticity Index G = Grain Size Analysis C = Consolidation Test

Sample Information

Sample No.	Pen./Rec. (in.)	Sample Depth (ft.)	Blows (/6 in.) Shear Strength (psf) or RQD (%)	N-uncorrected	N_{60}
1D	24/15	1.1 - 3.1	56/44/22/21	66	92
2D	24/9	4.0 - 6.0	11/8/4/7	12	17
3D	24/2	9.0 - 11.0	4/14/3/4	17	24
4D	24/5	14.0 - 16.0	8/17/9/9	26	36
5D	24/0	19.0 - 21.0	9/7/5/6	12	17
6D	24/5	24.0 - 26.0	7/10/7/6	17	24

Casing Blows: SSA, 34, 63, 78, 84, 61, 25, 53, 45, 19, 30, 11, 21, 26, 30, 26, 24, 60, 45, 173, 60*

Elevation (ft.): 28.9, 1.5

Visual Description and Remarks / Laboratory Testing Results/ AASHTO and Unified Class:

13'' ASPHALT (1.1)

Dark grey to light grey, dry, very dense, Sandy GRAVEL, trace silt, (Fill).

Brown, damp, medium dense, fine to coarse SAND, some gravel, little silt, (Fill).

Dark brown to black, wet, medium dense, GRAVEL, some sand, little silt, (Fill).

Dark brown to black, wet, dense, GRAVEL, trace sand, trace silt, (Fill). — A-1-a, GW WC=4.9%

No recovery.

Brown to black, wet, medium dense, GRAVEL, little sand, little silt, (Fill).

*60 blows for 0.5 ft.
No water return about 28.5 ft bgs.
(28.5)
Bottom of Exploration at 28.5 feet below ground surface.

Remarks:
1. Automatic hammer NEBC D-23. Energy Transfer Ratio = 0.834.
2. Augered with SSA to 9 feet. Switch to Drive & Wash. Drive 4-in casing to 14 feet. Telescope 3-in casing and drive to 28.5 feet.
3. Borehole was too out of plumb for core barrel. An offset boring was drilled for rock coring 1.5 feet north.
4. Borehole backfilled with soil cuttings and gravel. Patched with cold patch asphalt.
5. The boring coordinates and elevation were estimated using tape ties and a topographic survey provided by MaineDOT, and should be considered accurate to the degree implied.

Stratification lines represent approximate boundaries between soil types; transitions may be gradual.
* Water level readings have been made at times and under conditions stated. Groundwater fluctuations may occur due to conditions other than those present at the time measurements were made.

Page 1 of 1
Boring No.: BB-PSB-202

Maine Department of Transportation
Soil/Rock Exploration Log
US CUSTOMARY UNITS

Project: Smelt Brook Bridge (#2774) carrying Route 1 over Smelt Brook
Location: Perry, Maine
Boring No.: BB-PSB-202A
WIN: 026630.07

Driller:	New England Boring Contractors	Elevation (ft.)	30.0	Auger ID/OD:	5'' Solid Stem Auger
Operator:	B. Enos	Datum:	NAVD88	Sampler:	Standard Split Spoon
Logged By:	S. Carvajal	Rig Type:	Mobile B-53	Hammer Wt./Fall:	140 lbs/30''
Date Start/Finish:	5/15/25 - 5/15/25	Drilling Method:	Drive & Wash	Core Barrel:	NQ-2''
Boring Location:	N: 409674.5, E: 2496410.0	Casing ID/OD:		Water Level*:	24.3 ft bgs
Hammer Efficiency Factor: 0.834		Hammer Type:	Automatic ☒ Hydraulic ☐ Rope & Cathead ☐		

Definitions: D = Split Spoon Sample MD = Unsuccessful Split Spoon Sample Attempt U = Thin Wall Tube Sample MU = Unsuccessful Thin Wall Tube Sample Attempt V = Field Vane Shear Test, PP = Pocket Penetrometer MV = Unsuccessful Field Vane Shear Test Attempt R = Rock Core Sample SSA = Solid Stem Auger HSA = Hollow Stem Auger RC = Roller Cone WOH = weight of 140lb. hammer WOR/C = Weight of Rods or Casing WO1P = Weight of One Person $S_{u/r}$ = Peak/Remolded Field Vane Undrained Shear Strength (psf) $S_{u(lab)}$ = Lab Vane Shear Strength (psf) q_p = Unconfined Compressive Strength (ksf) N-uncorrected = Raw Field SPT N-value Hammer Efficiency Factor = Rig Specific Annual Calibration Value N_{60} = SPT N-uncorrected Corrected for Hammer Efficiency N_{60} = (Hammer Efficiency Factor/60%)*N-uncorrected T_v = Pocket Torvane Shear Strength (psf) WC = Water Content, percent LL = Liquid Limit PL = Plastic Limit PI = Plasticity Index G = Grain Size Analysis C = Consolidation Test

Sample Information

Sample No.	Pen./Rec. (in.)	Sample Depth (ft.)	Blows (/6 in.) Shear Strength (psf) or RQD (%)	N-uncorrected	N_{60}
1D R1	5/3 56/49	29.0 - 29.4 29.3 - 34.0	50(5'') RQD = 40%	--	--
R2 R3	6/6 42/42	34.0 - 34.5 34.5 - 38.0	RQD = 0% RQD = 52%		
R4	36/36	38.0 - 41.0	RQD = 31%		
R5	24/19	41.0 - 43.0	RQD = 17%		
R6	36/36	43.0 - 46.0	RQD = 58%		

Casing Blows: SSA, 27, 29, 18, 32, 82, 88, 153, 175, 108, 84, 78, 78, 71, 67, 68, 46, 47, 66, 148, 124, 110, 61, SPIN, SPIN

Elevation (ft.): 28.9, 7.0, 0.7, -16.0

Visual Description and Remarks / Laboratory Testing Results/ AASHTO and Unified Class:

13'' ASPHALT (1.1)

Rattling 20 feet.

(23.0)

Rattling 24 feet. No return.

Grey, wet, Gravelly SAND, little silt, (Glacial Till) (29.3)

Approximate Top of Bedrock at Elev. 0.7 ft.
R1: Bedrock: Greenish grey to purplish grey, fine grained, SHALE, mod. hard to hard, fresh to slightly weathered. Joints are low angle to steep, very close to close, tight to open, grey and purple sand and silt infilling, slickensided joint.
[Eastport Formation]
Rock Quality: Poor
88% Recovery
R1: Core Times (min:sec)
29.3 - 30.3 ft (3:23)
30.3 - 31.3 ft (2:42)
31.3 - 32.3 ft (1:49)
32.3 - 33.3 ft (2:51)
33.3 - 34.0 ft (1:43)
R2: Bedrock: Purplish grey, fine grained, SHALE, mod. hard, slightly weathered. Joints are mod. dipping to steep, very close, tight to open, rusting in joints, slickensided.
[Eastport Formation]
Rock Quality: Very Poor
100% Recovery
R2: Core Times (min:sec)
34.0 - 34.5 (1:50)
R3: Bedrock: Purplish grey to greenish grey, fine grained, SHALE, mod. hard to hard, fresh to slightly weathered. Joints are horizontal to steep, very close to close, tight to open, grey silt and sand infilling, rusting in joints, slickensided. Calcite instrusion/veins.
[Eastport Formation]
Rock Quality: Fair
100% Recovery
R3: Core Times (min:sec)
34.5 - 35.5 (2:30)
35.5 - 36.5 (2:04)
36.5 - 37.5 (1:48)
37.5 - 38.0 (1:28)
R4: Bedrock: Purplish grey to greenish grey, fine grained, SHALE, mod. hard to hard, fresh to slightly weathered. Joints are low angle to steep, very close to close, tight to open, grey silt and sand infilling, rusting in joints, slickensided. Calcite instrusion/veins in bottom 8''.
[Eastport Formation]
Rock Quality: Poor
100% Recovery
R4: Core Times (min:sec)
38.0 - 39.0 (2:25)
39.0 - 40.0 (2:40)
40.0 - 41.0 (1:48)
R5: Bedrock: Greenish grey to purplish grey, fine grained, SHALE, mod. hard to hard, fresh to slightly weathered. Joints are low angle to steep, very close to close, tight to open, grey silt and sand infilling, slickensided.
[Eastport Formation]
Rock Quality: Very Poor
79% Recovery
R5: Core Times (min:sec)
41.0 - 42.0 (2:18)
42.0 - 43.0 (3:33)
R6: Bedrock: Purplish grey, fine grained, SHALE, mod. hard to hard, fresh to slightly weathered. Joints are low angle to steep, very close to close, tight to open, grey silt and sand infilling.
[Eastport Formation]
Rock Quality: Fair
100% Recovery
R6: Core Times (min:sec)
43.0 - 44.0 (2:20)
44.0 - 45.0 (2:26)
45.0 - 46.0 (3:07)
(46.0)
Bottom of Exploration at 46.0 feet below ground surface.

q_p=960

Remarks:
1. Automatic hammer NEBC D-23. Energy Transfer Ratio = 0.834.
2. Boring drilled 1.5 ft north from BB-PSB-202
3. Augered with SSA to 5 feet. Switch to Drive & Wash. Drive 4-in casing to 27 feet. Telescope 3-in casing to core. No water in return during rock coring.
4. Borehole backfilled with soil cuttings and gravel. Patched with cold patch asphalt.
5. The boring coordinates and elevation were estimated using tape ties and a topographic survey provided by MaineDOT, and should be considered

Stratification lines represent approximate boundaries between soil types; transitions may be gradual.
* Water level readings have been made at times and under conditions stated. Groundwater fluctuations may occur due to conditions other than those present at the time measurements were made.

Page 1 of 1
Boring No.: BB-PSB-202A

STATE OF MAINE
DEPARTMENT OF TRANSPORTATION

APPROVED	DATE
COMMISSIONER:	
CHIEF ENGINEER:	

	BY	DATE
PROJ. MANAGER	M. JOHNESCU	
DESIGN-DETAILED	M. JOHNESCU Y. SOJO	7\17\2025
CHECKED-REVIEWED	M. JOHNESCU N. BETANCUR	8\4\2025
DESIGN2-DETAILED2		
DESIGN3-DETAILED3		
REVISIONS 1		
REVISIONS 2		
REVISIONS 3		
REVISIONS 4		
FIELD CHANGES		

SIGNATURE
P.E. NUMBER
DATE

BRIDGE NO. 2774
CROSSING SMELT BROOK
PERRY

BORING LOGS (2 OF 2)

SHEET NUMBER
8
OF 35

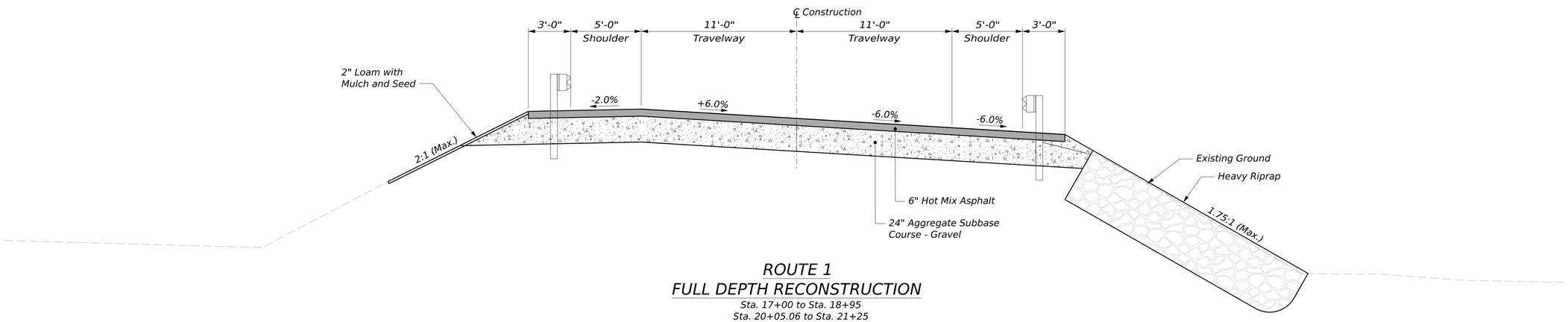

ROUTE 1
FULL DEPTH RECONSTRUCTION

Sta. 17+00 to Sta. 18+95
Sta. 20+05.06 to Sta. 21+25

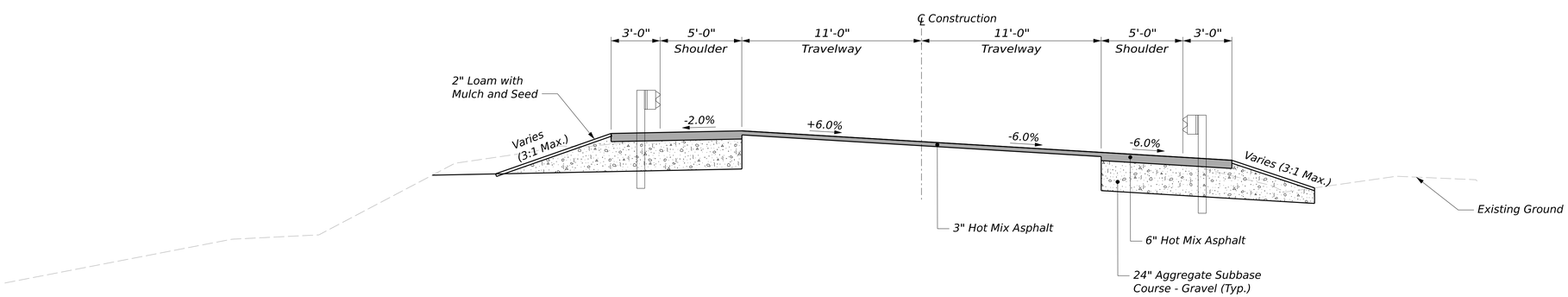

ROUTE 1
VARIABLE DEPTH MILL, SHIM & OVERLAY

Sta. 16+00 to Sta. 16+50
Sta. 21+75 to Sta. 22+75

Notes:
1. The pavement, base and subbase depths as shown on the plans are intended to be nominal.

2. When the superelevation exceeds 4%, the low side shoulder pavement shall have the same cross slope as the travelway.

3. Crowns for both normal and superelevation sections for all courses of subbase and pavement shall be straight.

4. The algebraic difference between the shoulder and travelway cross slopes "rollover" shall not exceed 8%.

5. The stationing on the typical sections and in the tables is approximate.

6. Embankment grading presented on the cross sections represents the final finished grade elevations (top of loeam to be placed).

STATE OF MAINE
DEPARTMENT OF TRANSPORTATION

Federal Project No. 02663007

WIN 026630.07

PROJ MANAGER	MARK PARLIN		
DESIGN-DETAILED	E.BROWNELL	D.BURGESS	8/6/2025
CHECKED-REVIEWED	E.BROWNELL	J.BURGESS	8/6/2025
DESIGN2-DETAILED2			
DESIGN3-DETAILED3			
REVISIONS 1			
REVISIONS 2			
REVISIONS 3			
REVISIONS 4			
FIELD CHANGES			

SIGNATURE

P.E. NUMBER

DATE

BRIDGE NO. 2774
CROSSING SMELT BROOK
PERRY

TYPICAL SECTIONS

SHEET NUMBER

9

OF 35

Date: 8/12/2025

Username: diana

Filename: C:\Users\diana\Dropbox\DCS-Projects\Thornton Tomasetti\26630_07\BRIDGE\Typical_Approach.dgn

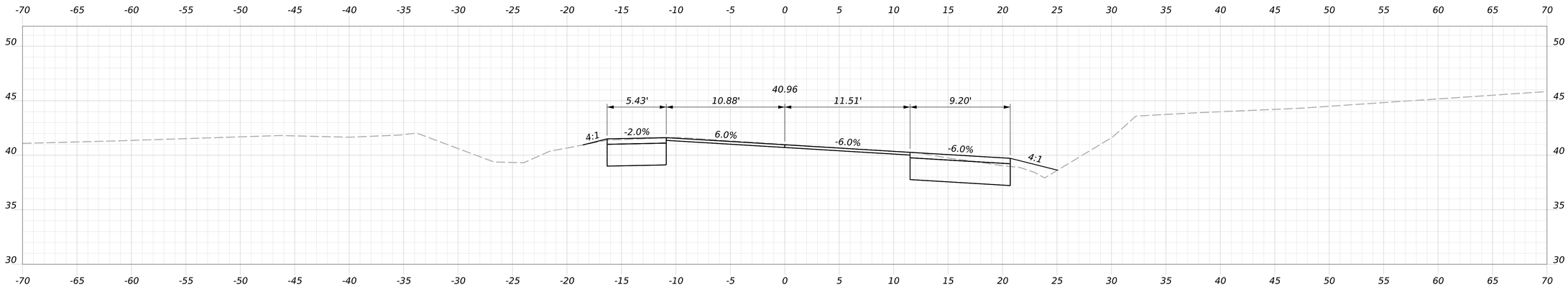

16+25.00

Sta. 16+00
Begin Pavement Mill and Overlay
Match Existing Pavement

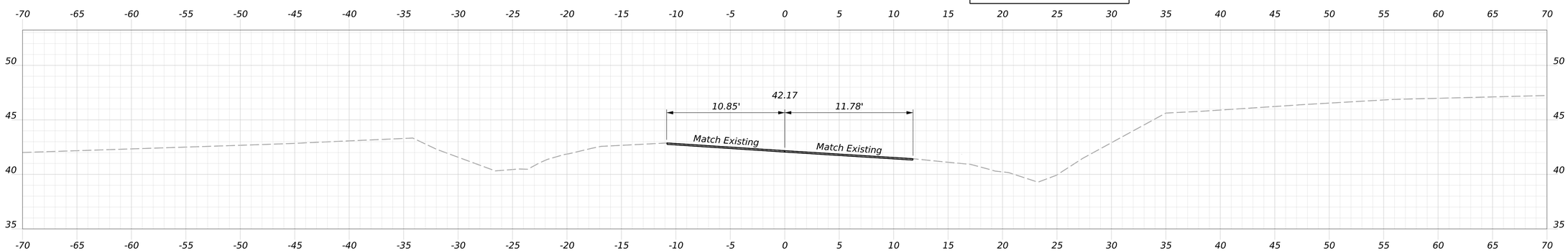

16+00.00

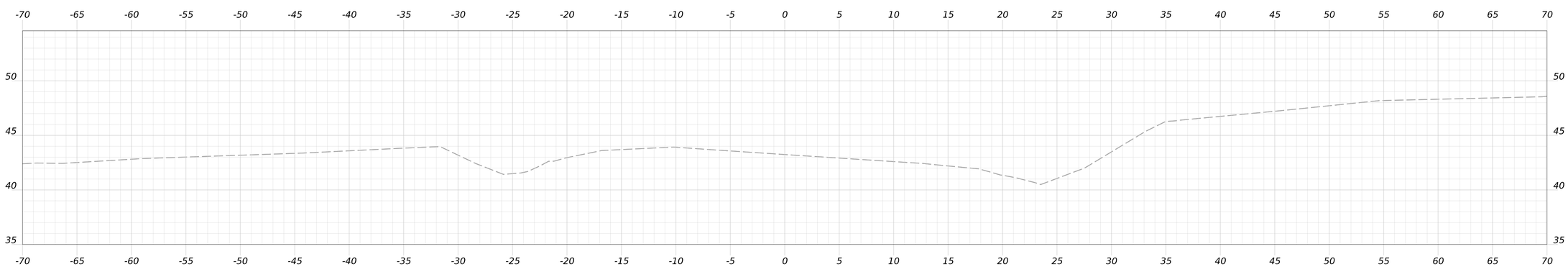

15+75.00

STATE OF MAINE
DEPARTMENT OF TRANSPORTATION

Federal Project No. 02663007

WIN 026630.07

SIGNATURE

P.E. NUMBER

DATE

PROJ MANAGER	MARK PARLIN	BY	DATE
DESIGN-DETAILED	E.BROWNELL	D.BURGESS	8/6/2025
CHECKED-REVIEWED	E.BROWNELL	J.BURGESS	8/6/2025
DESIGN2-DETAILED2			
DESIGN3-DETAILED3			
REVISIONS 1			
REVISIONS 2			
REVISIONS 3			
REVISIONS 4			
FIELD CHANGES			

BRIDGE NO. 2774
CROSSING SMELT BROOK
PERRY

CROSS SECTIONS

SHEET NUMBER

10

OF 35

Date: 8/12/2025

Username: diana

Filename: C:\Users\diana\Dropbox\DCS-Projects\Thornton Tomasetti\26630_07\BRIDGE\Cross_Sections_Route 1.dgn

Sta. 17+07.64, 16.00' Rt.
Install W-Beam Guardrail Mid-Way Splice, Flared Terminal

Sta. 17+07.64, 16.00' Rt. to Sta. 18+60.21, 16.00' Rt.
Install W-Beam Guardrail Mid-Way Splice

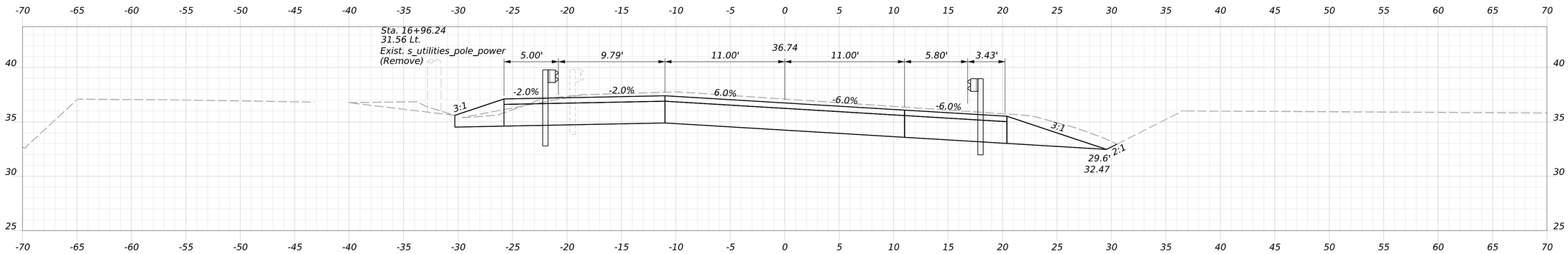

17+00.00

Sta. 17+38.35, 16.00' Lt.
Install W-Beam Guardrail Mid-Splice, Flared Terminal

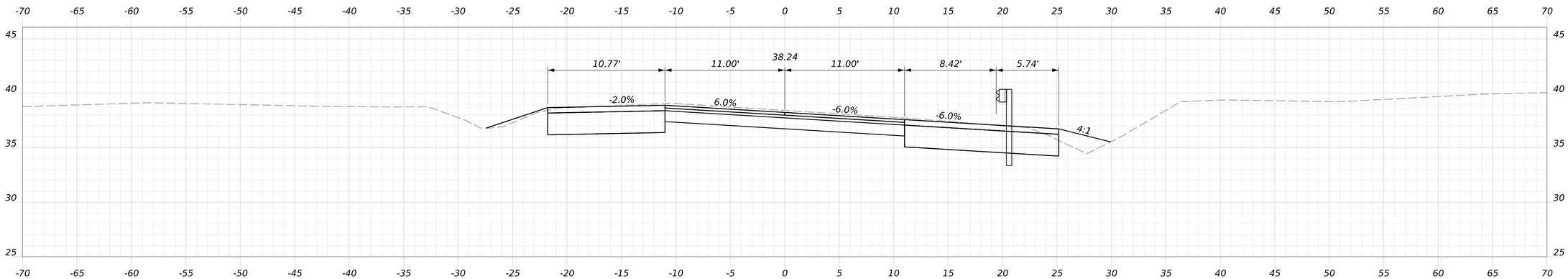

16+75.00

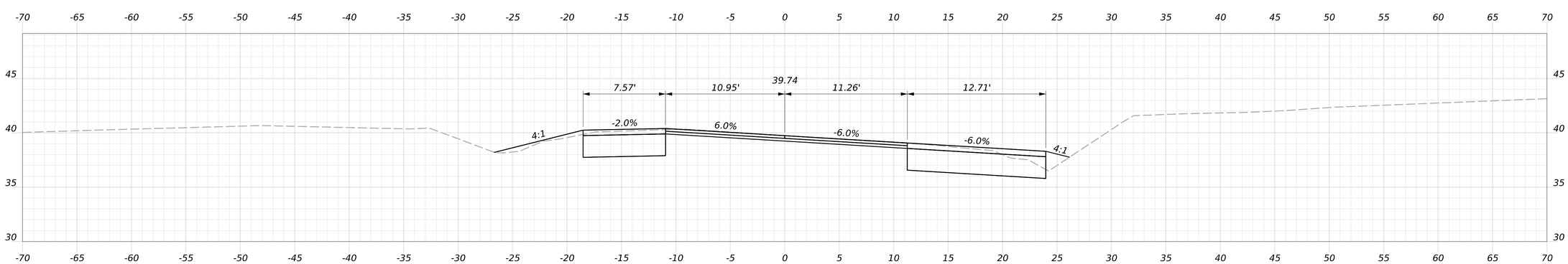

16+50.00

STATE OF MAINE
DEPARTMENT OF TRANSPORTATION

Federal Project No. 02663007

WIN 026630.07

SIGNATURE

P.E. NUMBER

DATE

PROJ. MANAGER	MARK PARLIN		
DESIGN-DETAILED	EBROWNELL	DBURGESS	8/6/2025
CHECKED-REVIEWED	EBROWNELL	JBURGESS	8/6/2025
DESIGN2-DETAILED2			
DESIGN3-DETAILED3			
REVISIONS 1			
REVISIONS 2			
REVISIONS 3			
REVISIONS 4			
FIELD CHANGES			

BRIDGE NO. 2774
CROSSING SMELT BROOK
PERRY

CROSS SECTIONS

SHEET NUMBER

11

OF 35

Date: 8/12/2025

Username: diana

Filename: C:\Users\diana\Dropbox\DCS-Projects\Thornton Tomasetti\26630_07\BRIDGE\Cross_Sections_Route 1.dgn

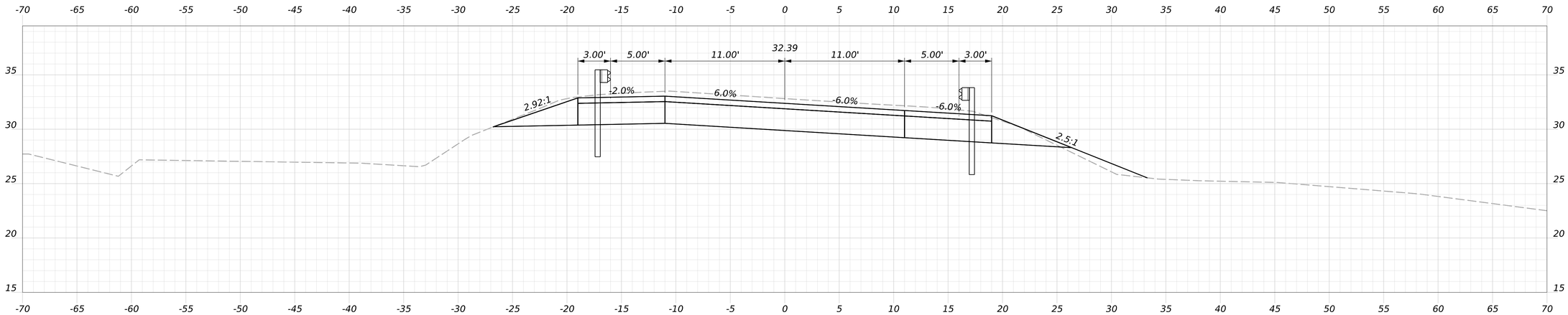

17+75.00

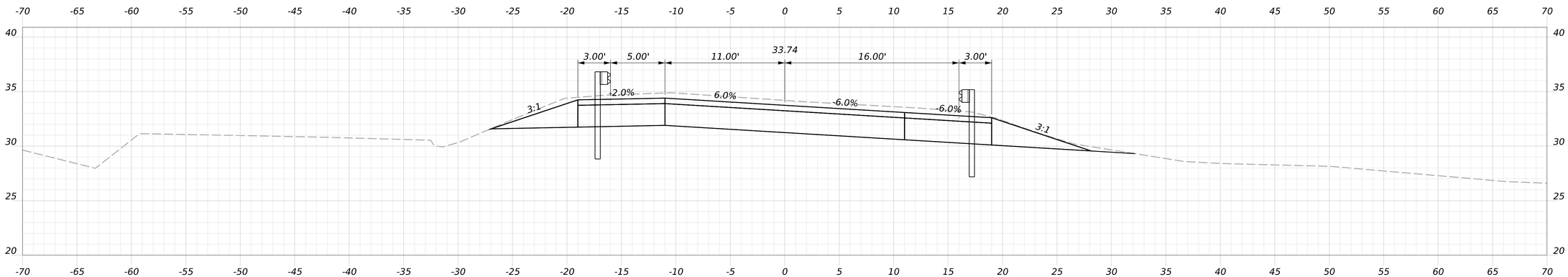

17+50.00

Sta. 17+38.35, 16.00' Lt. to Sta. 18+48.99, 16.00' Lt.
Install W-Beam Guardrail Mid-Way Splice

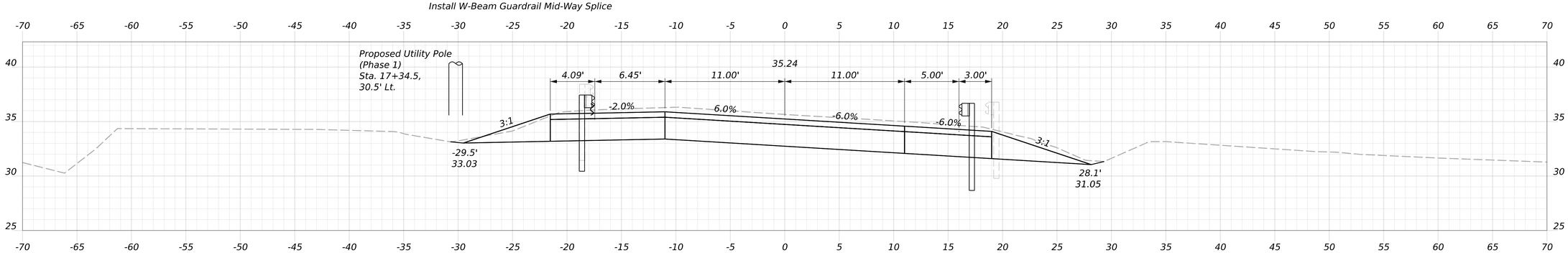

17+25.00

STATE OF MAINE
DEPARTMENT OF TRANSPORTATION

Federal Project No. 02663007

WIN 026630.07

PROJ MANAGER	MARK PARLIN		
DESIGN-DETAILED	E.BROWNELL	D.BURGESS	8/6/2025
CHECKED-REVIEWED	E.BROWNELL	J.BURGESS	8/6/2025
DESIGN2-DETAILED2			
DESIGN3-DETAILED3			
REVISIONS 1			
REVISIONS 2			
REVISIONS 3			
REVISIONS 4			
FIELD CHANGES			

SIGNATURE

P.E. NUMBER

DATE

BRIDGE NO. 2774
CROSSING SMELT BROOK
PERRY

CROSS SECTIONS

SHEET NUMBER

12

OF 35

Date: 8/12/2025

Username: diana

Filename: C:\Users\diana\Dropbox\DCS-Projects\Thornton Tomasetti\26630_07\BRIDGE\Cross_Sections_Route 1.dgn

Sta. 18+48.99, 16.00' Lt. to Sta. 18+69.13, 16.21' Lt.
Install Standard Bridge Transition Type 1

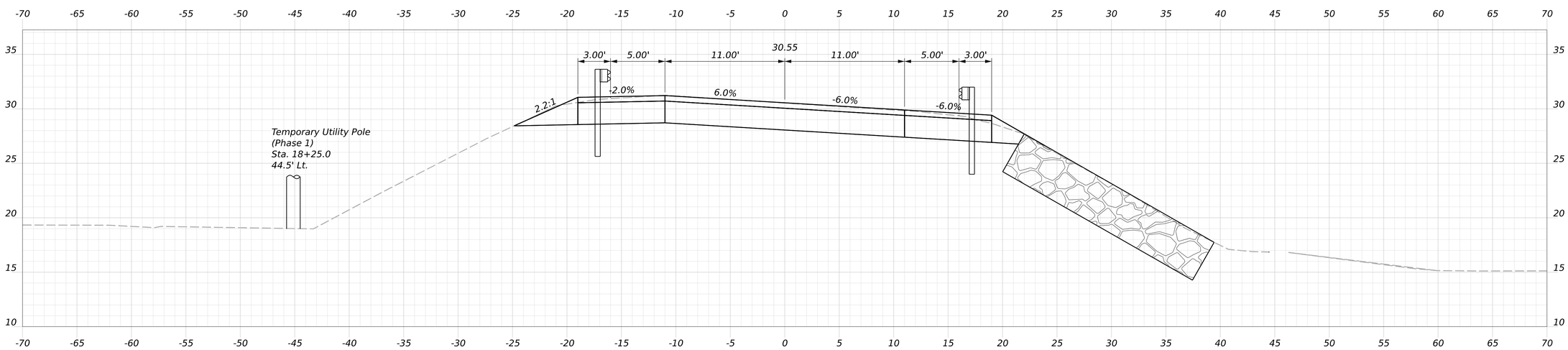

18+25.00

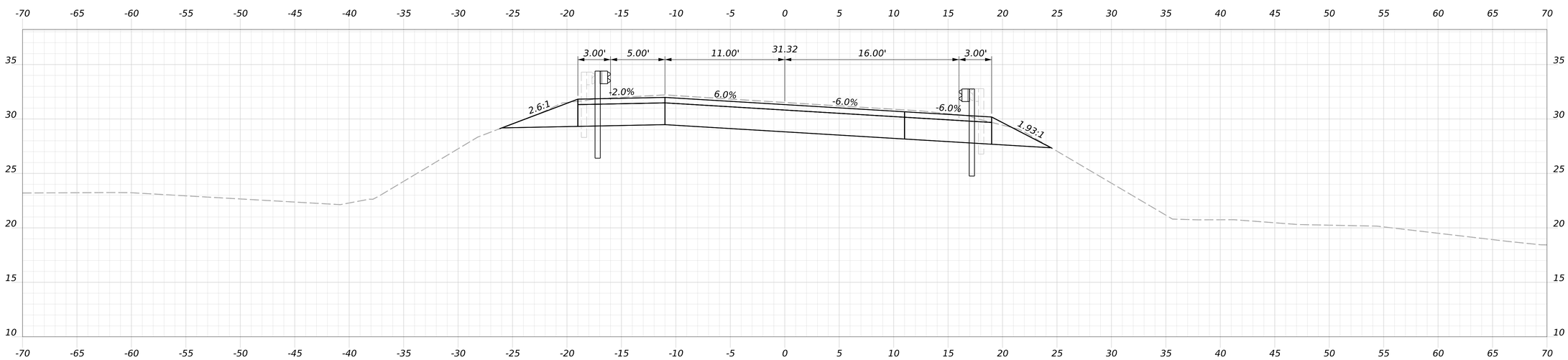

18+00.00

STATE OF MAINE
DEPARTMENT OF TRANSPORTATION

Federal Project No. 02663007

WIN 026630.07

SIGNATURE

P.E. NUMBER

DATE

PROJ MANAGER	MARK PARLIN		
DESIGN-DETAILED	E.BROWNELL	D.BURGESS	8/6/2025
CHECKED-REVIEWED	E.BROWNELL	J.BURGESS	8/6/2025
DESIGN2-DETAILED2			
DESIGN3-DETAILED3			
REVISION 1			
REVISION 2			
REVISION 3			
REVISION 4			
FIELD CHANGES			

BRIDGE NO. 2774
CROSSING SMELT BROOK
PERRY

CROSS SECTIONS

SHEET NUMBER

13

OF 35

Date: 8/12/2025

Username: diana

Filename: C:\Users\diana\Dropbox\DCS-Projects\Thornton Tomasetti\26630_07\BRIDGE\Cross_Sections_Route 1.dgn

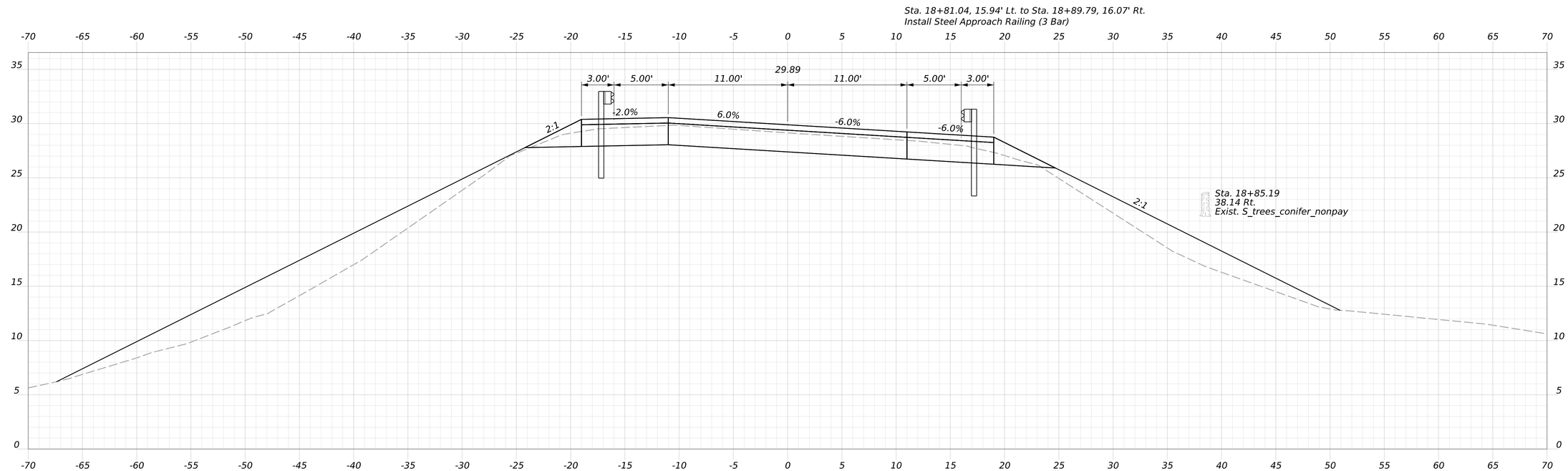

18+75.00

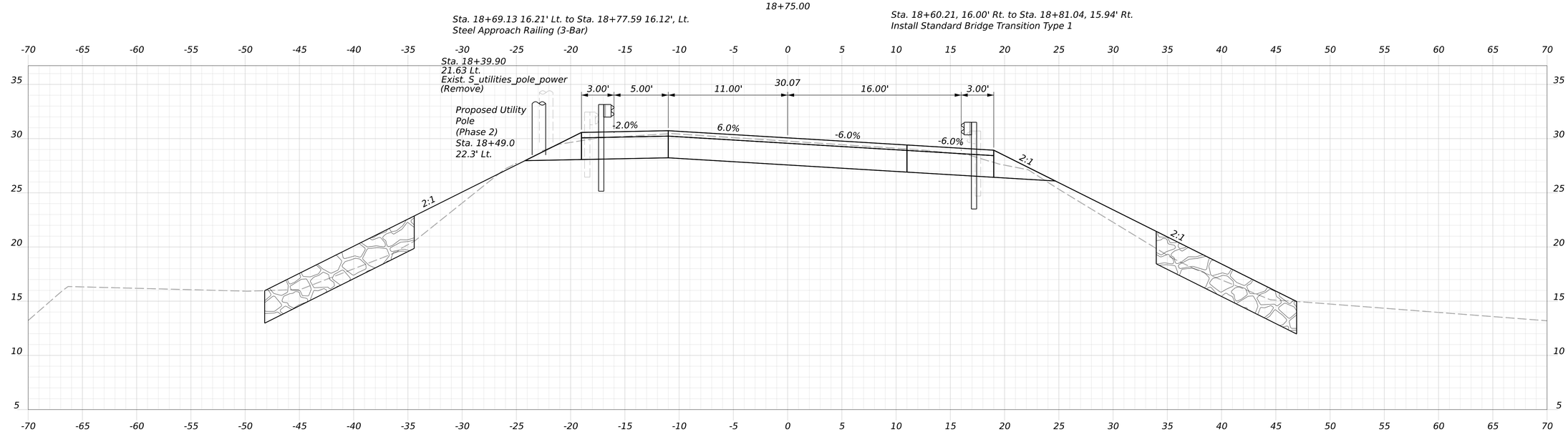

18+50.00

STATE OF MAINE
DEPARTMENT OF TRANSPORTATION

Federal Project No. 02663007

WIN 026630.07

PROJ MANAGER	MARK PARLIN		
DESIGN-DETAILED	E.BROWNELL	D.BURGESS	8/6/2025
CHECKED-REVIEWED	E.BROWNELL	J.BURGESS	8/6/2025
DESIGN2-DETAILED2			
DESIGN3-DETAILED3			
REVISIONS 1			
REVISIONS 2			
REVISIONS 3			
REVISIONS 4			
FIELD CHANGES			

SIGNATURE

P.E. NUMBER

DATE

BRIDGE NO. 2774
CROSSING SMELT BROOK
PERRY

CROSS SECTIONS

SHEET NUMBER

14

OF 35

Date: 8/12/2025

Username: diana

Filename: C:\Users\diana\Dropbox\DCS-Projects\Thornton Tomasetti\26630_07\BRIDGE\Cross_Sections_Route 1.dgn

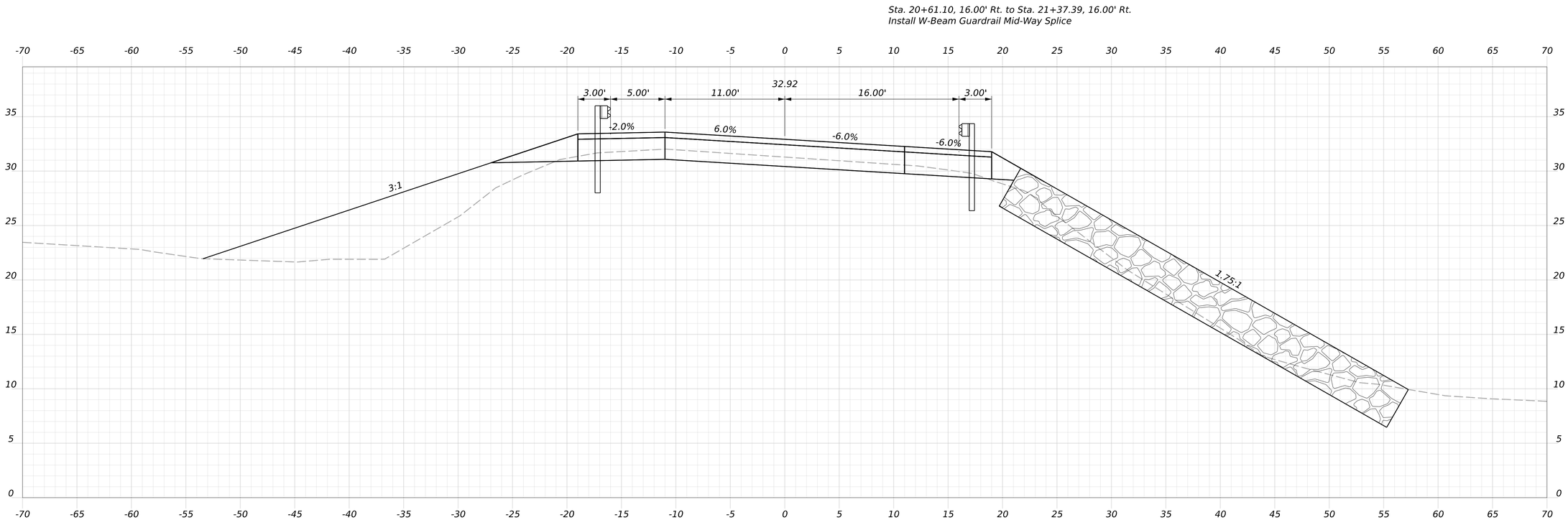

Sta. 21+12.12, 16.00' Lt.
Install W-Beam Guardrail Mid-Way Splice

Sta. 20+38.36, 16.00' Lt. to Sta. 21+12.12, 16.00' Lt.
Install W-Beam Guardrail Mid-Way Splice

20+50.00

Sta. 20+40+27, 15.85' Rt. to Sta. 20+61.10, 16.00' Rt.
Install Standard Bridge Transition Type 1

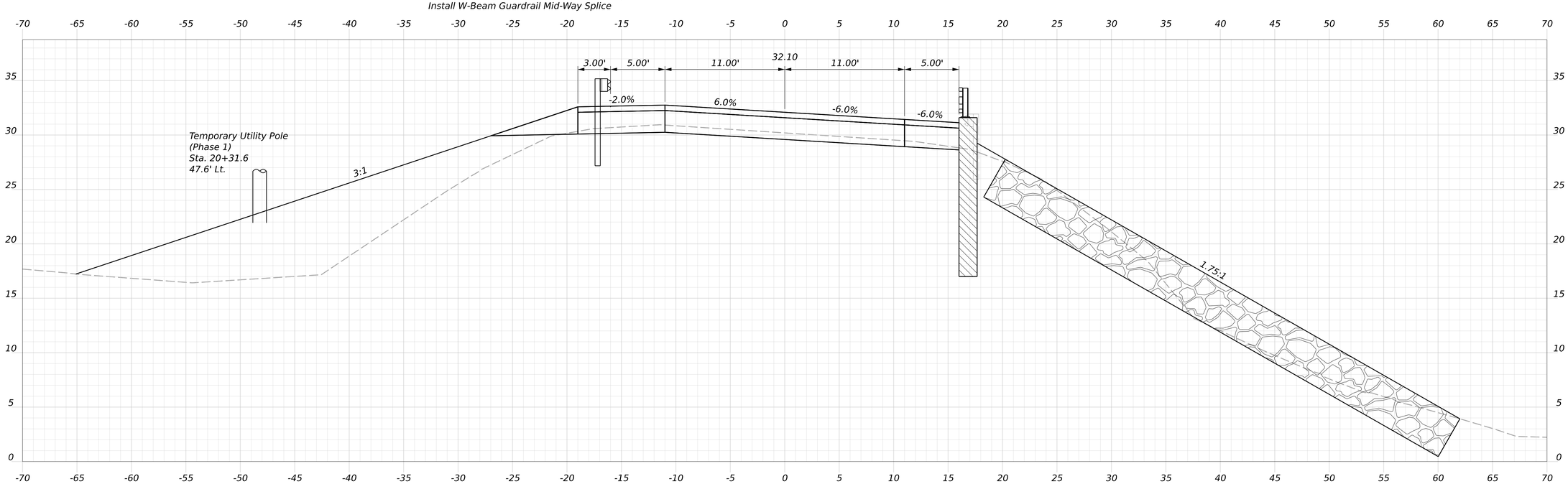

Sta. 20+18.22, 16.30' Lt. to Sta. 20+38.36, 16.00' Lt.
Install Standard Bridge Transition Type 1

20+25.00

STATE OF MAINE
DEPARTMENT OF TRANSPORTATION

Federal Project No. 02663007

WIN 026630.07

PROJ MANAGER	MARK PARLIN		
DESIGN-DETAILED	E.BROWNELL	D.BURGESS	8/6/2025
CHECKED-REVIEWED	E.BROWNELL	J.BURGESS	8/6/2025
DESIGN2-DETAILED2			
DESIGN3-DETAILED3			
REVISIONS 1			
REVISIONS 2			
REVISIONS 3			
REVISIONS 4			
FIELD CHANGES			

SIGNATURE

P.E. NUMBER

DATE

BRIDGE NO. 2774
CROSSING SMELT BROOK
PERRY

CROSS SECTIONS

SHEET NUMBER

15

OF 35

Date: 8/12/2025

Username: diana

Filename: C:\Users\diana\Dropbox\DCS-Projects\Thornton Tomasetti\26630_07\BRIDGE\Cross_Sections_Route 1.dgn

Sta. 21+21.12, Rt.
W-Beam Guardrail Mid-Way Splice - Flared Terminal

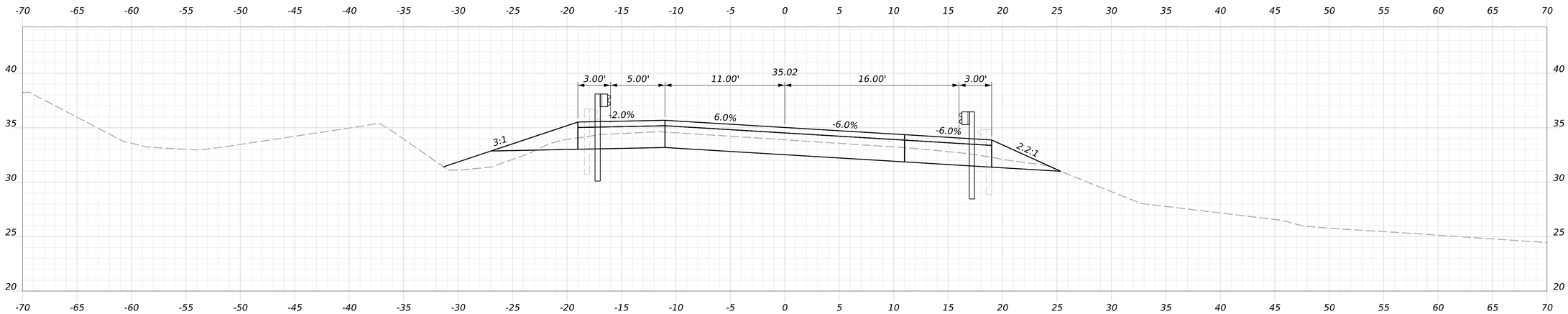

21+00.00

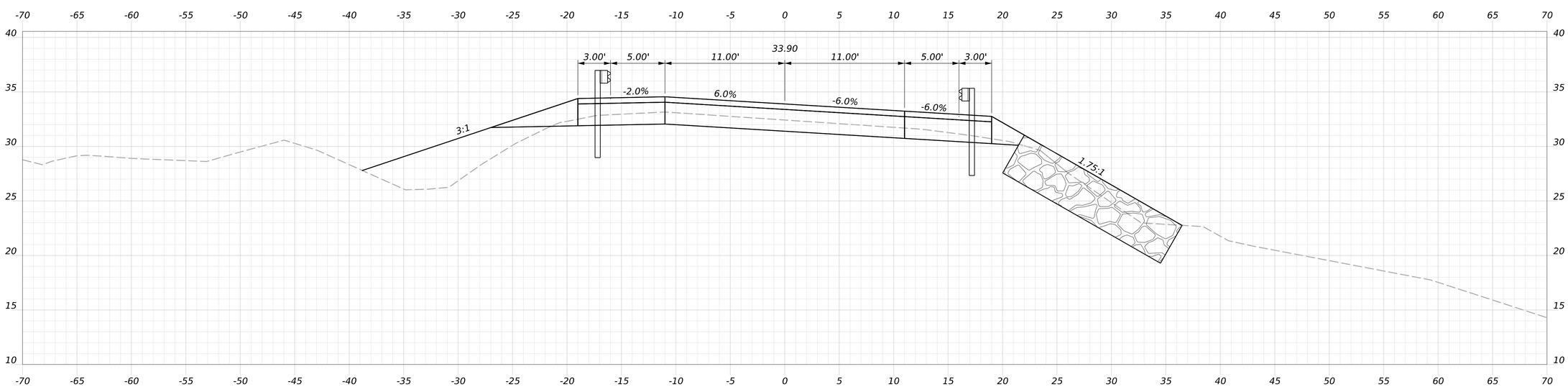

20+75.00

STATE OF MAINE
DEPARTMENT OF TRANSPORTATION

Federal Project No. 02663007

WIN 026630.07

PROJ. MANAGER	MARK PARLIN		
DESIGN-DETAILED	E.BROWNELL	D.BURGESS	8/6/2025
CHECKED-REVIEWED	E.BROWNELL	J.BURGESS	8/6/2025
DESIGN2-DETAILED2			
DESIGN3-DETAILED3			
REVISIONS 1			
REVISIONS 2			
REVISIONS 3			
REVISIONS 4			
FIELD CHANGES			

SIGNATURE

P.E. NUMBER

DATE

BRIDGE NO. 2774
CROSSING SMELT BROOK
PERRY

CROSS SECTIONS

SHEET NUMBER

16

OF 35

Date: 8/12/2025

Username: diana

Filename: C:\Users\diana\Dropbox\DCS-Projects\Thornton Tomasetti\26630_07\BRIDGE\Cross_Sections_Route 1.dgn

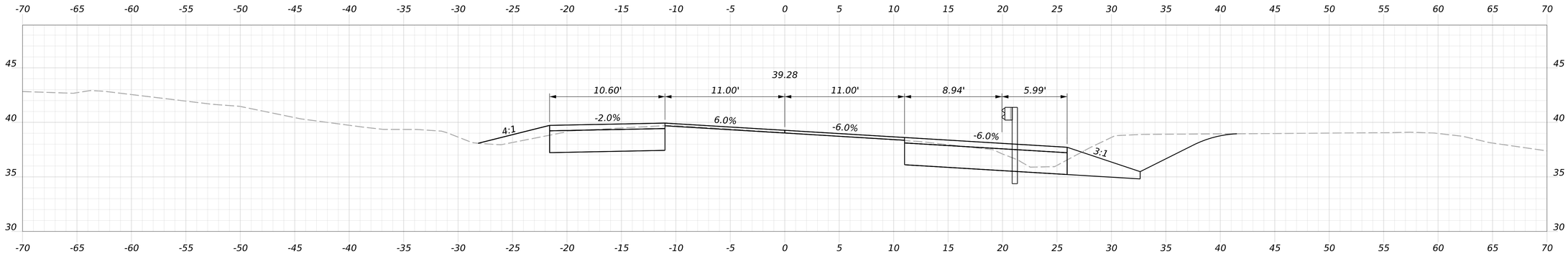

21+75.00

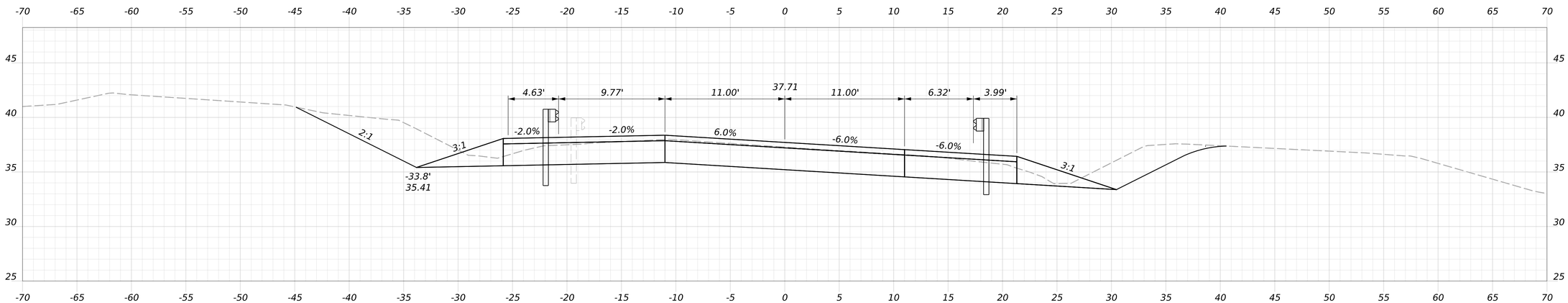

Sta. 21+37.39, Lt.
W-Beam Guardrail Mid-Way Splice - Flared Terminal

21+50.00

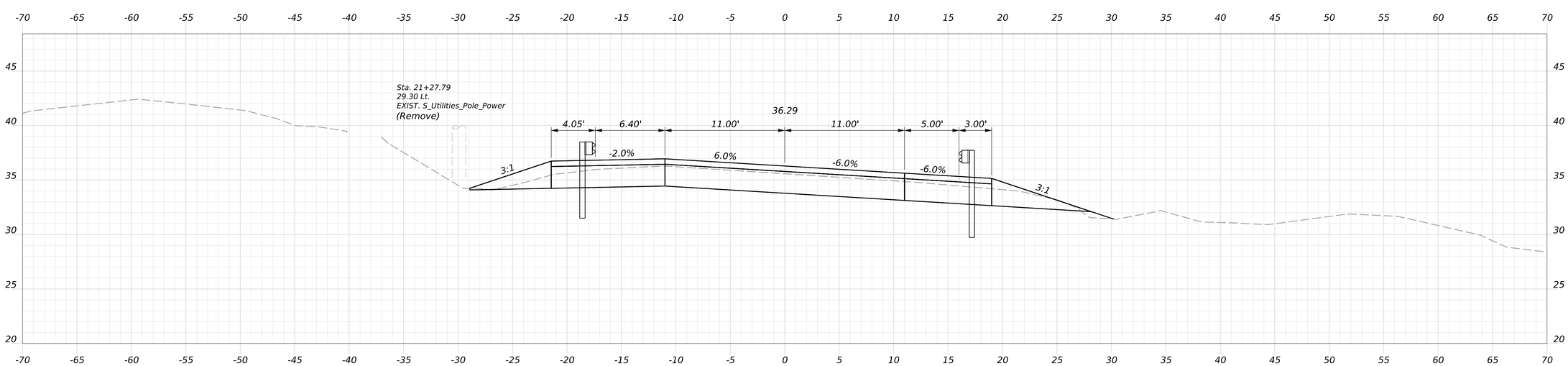

21+25.00

STATE OF MAINE
DEPARTMENT OF TRANSPORTATION

Federal Project No. 02663007

WIN 026630.07

PROJ. MANAGER	MARK PARLIN		
DESIGN-DETAILED	E.BROWNELL	D.BURGESS	8/6/2025
CHECKED-REVIEWED	E.BROWNELL	J.BURGESS	8/6/2025
DESIGN2-DETAILED2			
DESIGN3-DETAILED3			
REVISIONS 1			
REVISIONS 2			
REVISIONS 3			
REVISIONS 4			
FIELD CHANGES			

SIGNATURE

P.E. NUMBER

DATE

BRIDGE NO. 2774
CROSSING SMELT BROOK
PERRY

CROSS SECTIONS

SHEET NUMBER

17

OF 35

Date: 8/12/2025

Username: diana

Filename: C:\Users\diana\Dropbox\DCS-Projects\Thornton Tomasetti\26630_07\BRIDGE\Cross_Sections_Route 1.dgn

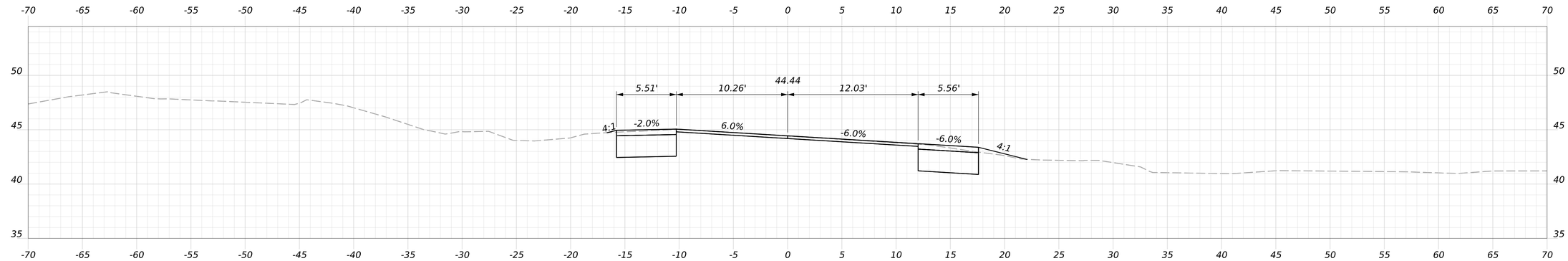

22+50.00

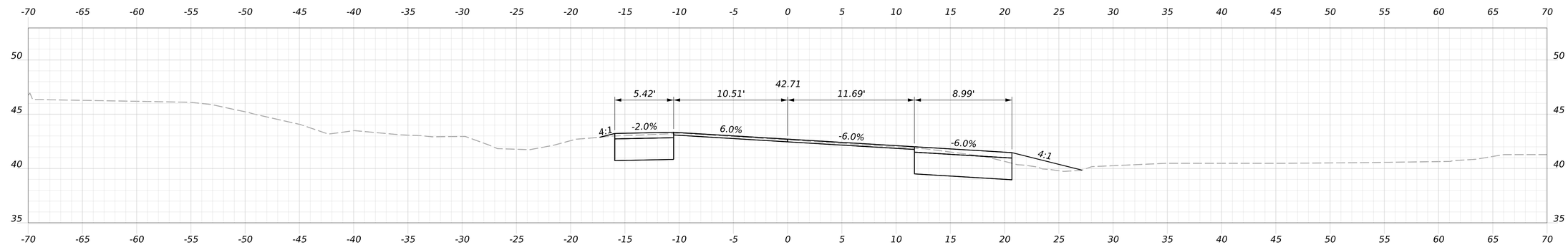

22+25.00

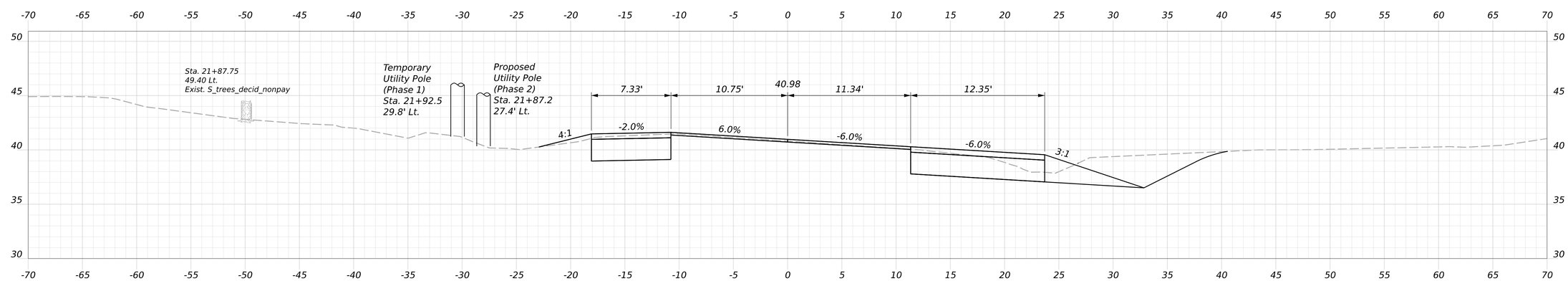

22+00.00

STATE OF MAINE
DEPARTMENT OF TRANSPORTATION

Federal Project No. 02663007

WIN 026630.07

SIGNATURE

P.E. NUMBER

DATE

PROJ MANAGER	MARK PARLIN		
DESIGN-DETAILED	E.BROWNELL	D.BURGESS	8/6/2025
CHECKED-REVIEWED	E.BROWNELL	J.BURGESS	8/6/2025
DESIGN2-DETAILED2			
DESIGN3-DETAILED3			
REVISIONS 1			
REVISIONS 2			
REVISIONS 3			
REVISIONS 4			
FIELD CHANGES			

BRIDGE NO. 2774
CROSSING SMELT BROOK
PERRY

CROSS SECTIONS

SHEET NUMBER

18

OF 35

Date: 8/12/2025

Username: diana

Filename: C:\Users\diana\Dropbox\DCS-Projects\Thornton Tomasetti\26630_07\BRIDGE\Cross_Sections_Route 1.dgn

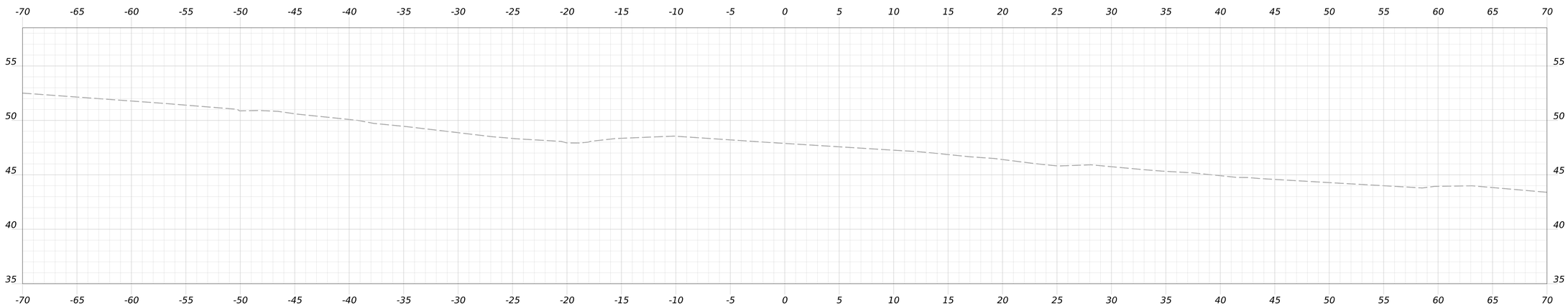

23+00.00

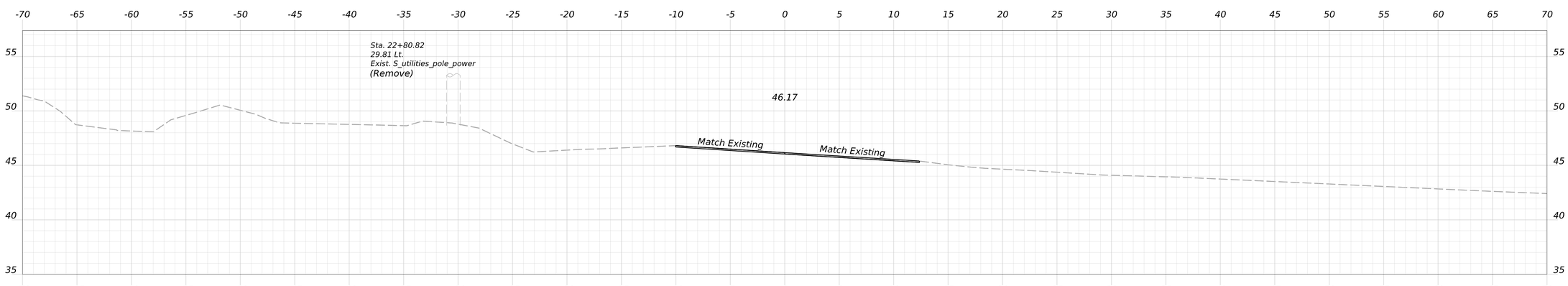

22+75.00

STATE OF MAINE
DEPARTMENT OF TRANSPORTATION

Federal Project No. 02663007

WIN 026630.07

SIGNATURE

P.E. NUMBER

DATE

PROJ MANAGER	MARK PARLIN	BY	DATE
DESIGN-DETAILED	E.BROWNELL	D.BURGESS	8/6/2025
CHECKED-REVIEWED	E.BROWNELL	J.BURGESS	8/6/2025
DESIGN2-DETAILED2			
DESIGN3-DETAILED3			
REVISIONS 1			
REVISIONS 2			
REVISIONS 3			
REVISIONS 4			
FIELD CHANGES			

BRIDGE NO. 2774
CROSSING SMELT BROOK
PERRY

CROSS SECTIONS

SHEET NUMBER

19

OF 35

Date: 8/12/2025

Username: diana

Filename: C:\Users\diana\Dropbox\DCS-Projects\Thornton Tomasetti\26630_07\BRIDGE\Cross_Sections_Route 1.dgn

CURVE DATA #1
PI = 51+53.59
D = 16°22'12.80"
Δ = 25°00'26.05" (LT)
R = 350.00'
L = 152.76'
T = 77.62'
E = 8.50'

CURVE DATA #2
PI = 54+22.87
D = 05°43'46.48"
Δ = 21°58'24.68" (RT)
R = 1000.00'
L = 383.51'
T = 194.14'
E = 18.67'

CURVE DATA #3
PI = 56+67.46
D = 28°38'52.40"
Δ = 30°52'11.80" (RT)
R = 200.00'
L = 107.76'
T = 55.22'
E = 7.48'

CURVE DATA #4
PI = 59+03.37
D = 22°55'05.92"
Δ = 41°13'17.95" (RT)
R = 250.00'
L = 179.86'
T = 94.02'
E = 17.10'

CURVE DATA #5
PI = 62+14.10
D = 01°54'35.49"
Δ = 08°34'27.66" (RT)
R = 3000.00'
L = 448.95'
T = 224.90'
E = 8.42'

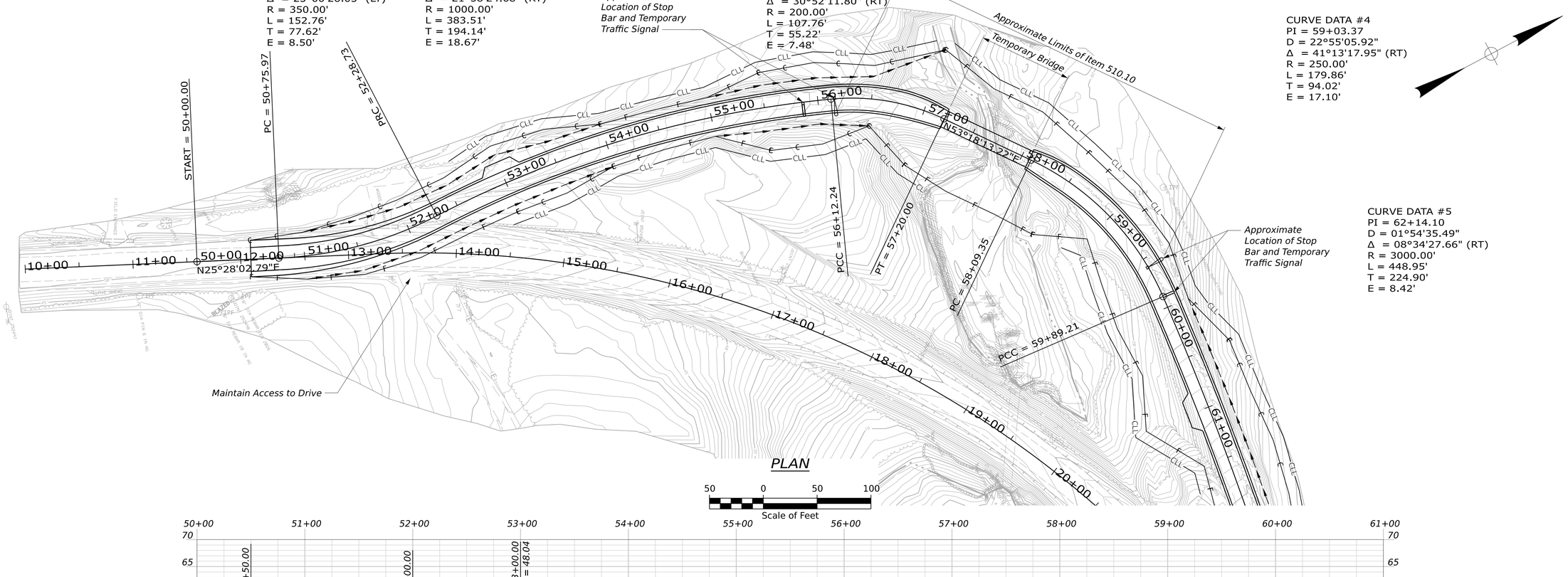

PLAN

Scale of Feet: 50 0 50 100

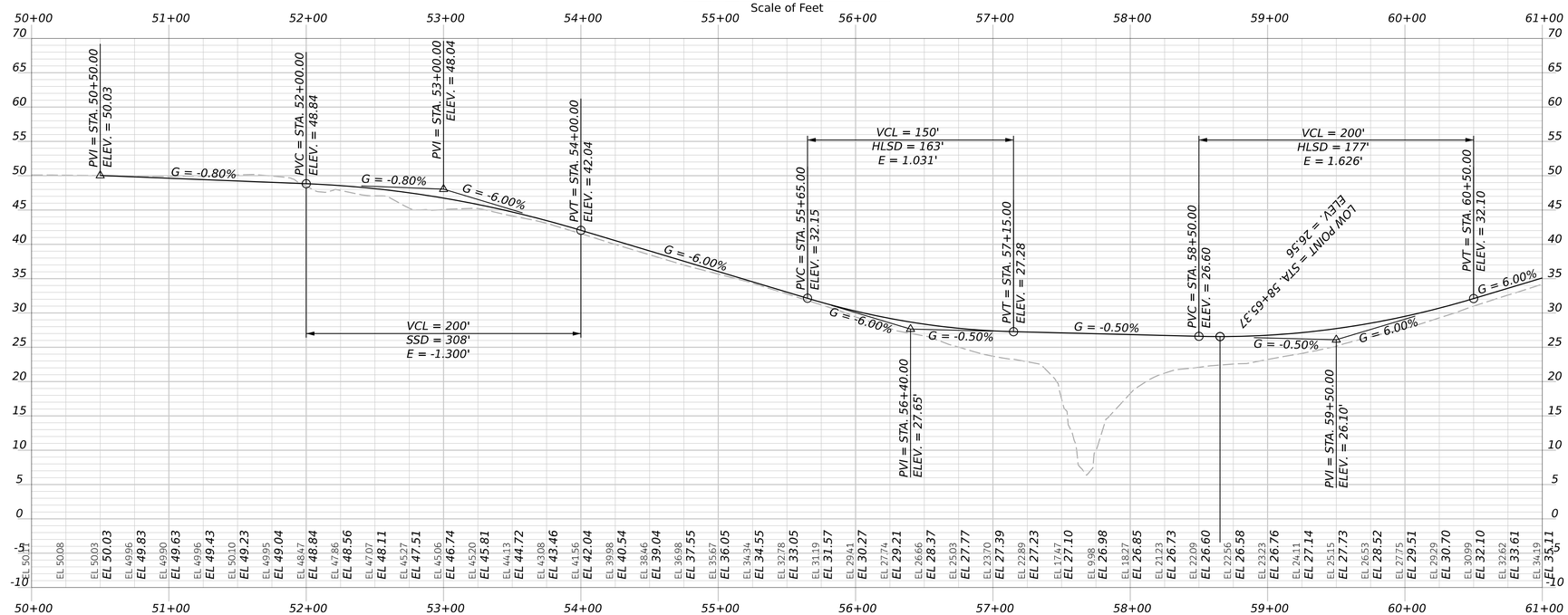

PROFILE

Horiz. 50 0 50 100
Vert. 5 0 5 10
Scale of Feet

STATE OF MAINE
DEPARTMENT OF TRANSPORTATION

Federal Project No. 02663007

WIN 026630.07

PROJ MANAGER	MARK PARLIN		
DESIGN-DETAILED	E.BROWNELL	D.BURGESS	8/6/2025
CHECKED-REVIEWED	E.BROWNELL	J.BURGESS	8/6/2025
DESIGN2-DETAILED2			
DESIGN3-DETAILED3			
REVISIONS 1			
REVISIONS 2			
REVISIONS 3			
REVISIONS 4			
FIELD CHANGES			

SIGNATURE

P.E. NUMBER

DATE

BRIDGE NO. 2774
CROSSING SMELT BROOK
PERRY

TEMPORARY DETOUR PLAN - 1

SHEET NUMBER

12

OF 35

Date: 8/12/2025

Username: diana

Filename: C:\Users\diana\Dropbox\DCS-Projects\Thornton Tomasetti\26630_07\BRIDGE\PlanProfile_Detour.dgn

CURVE DATA #5
PI = 62+14.10
D = 01°54'35.49"
Δ = 08°34'27.66" (RT)
R = 3000.00'
L = 448.95'
T = 224.90'
E = 8.42'

CURVE DATA #6
PI = 64+96.90
D = 07°09'43.10"
Δ = 08°23'56.67" (LT)
R = 800.00'
L = 117.27'
T = 58.74'
E = 2.15'

CURVE DATA #7
PI = 66+17.81
D = 06°01'52.08"
Δ = 07°30'45.96" (RT)
R = 950.00'
L = 124.57'
T = 62.37'
E = 2.05'

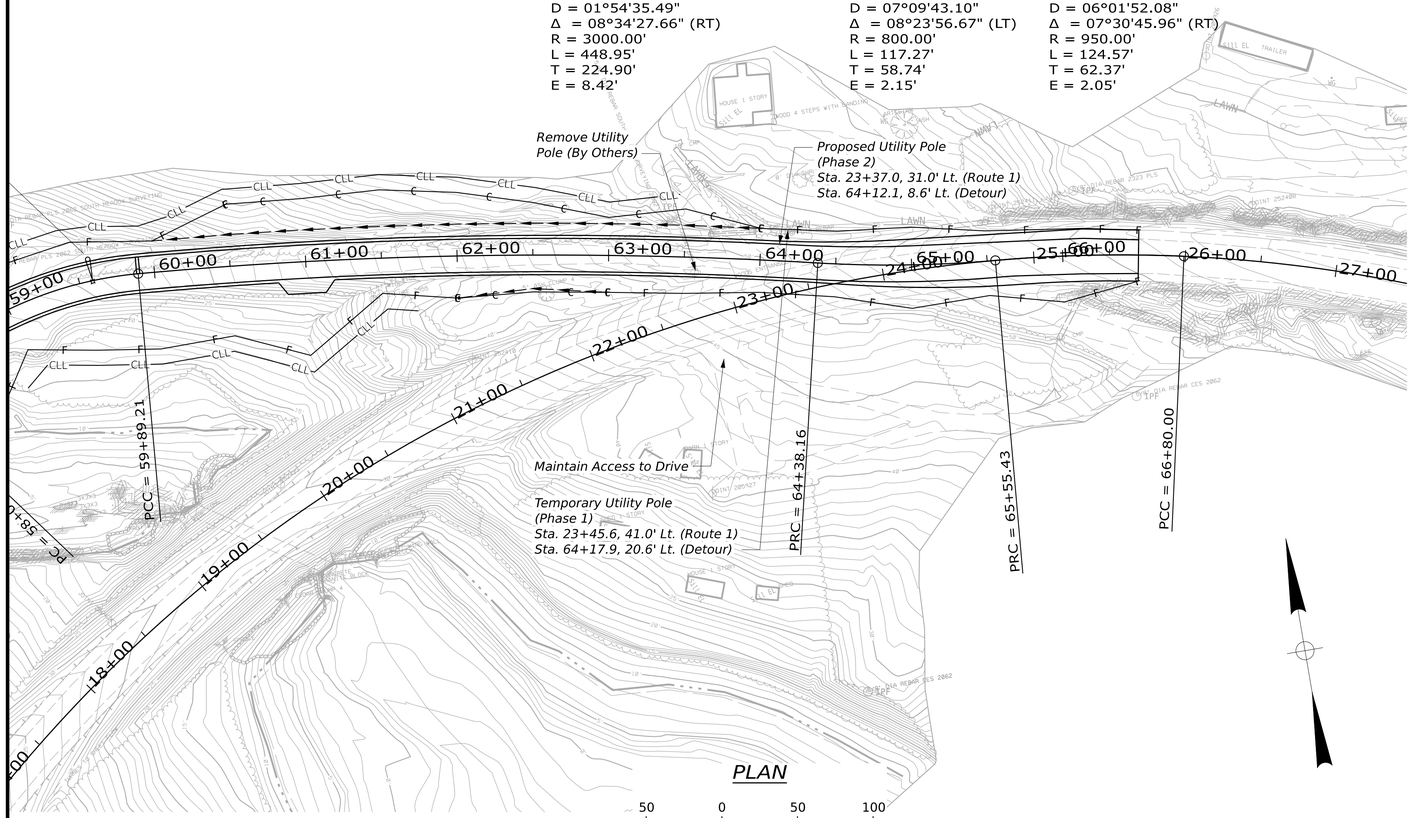

PLAN

Scale of Feet: 50 0 50 100

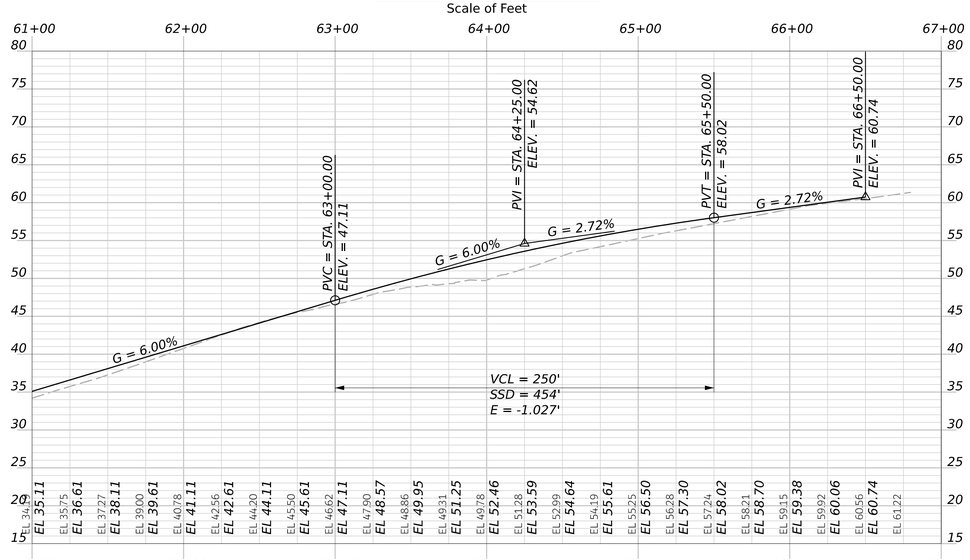

PROFILE

Horiz. 50 0 50 100
Vert. 5 0 5 10

Scale of Feet

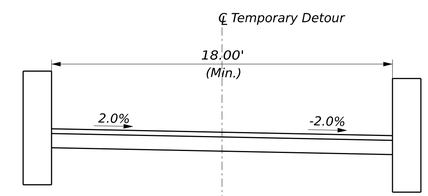

CONCEPTUAL TEMPORARY BRIDGE SECTION

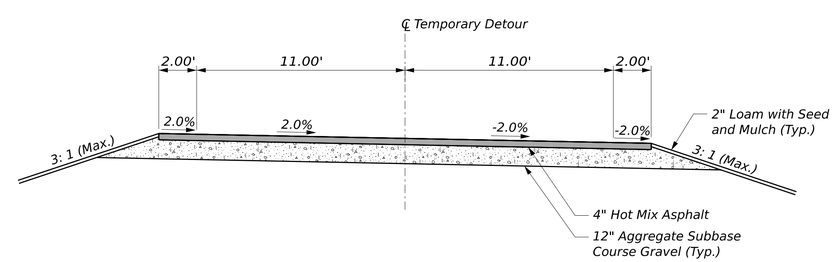

TYPICAL DETOUR APPROACH SECTION

STATE OF MAINE
DEPARTMENT OF TRANSPORTATION

Federal Project No. 02663007

WIN 026630.07

PROJ MANAGER	MARK PARLIN	BY	DATE
DESIGN-DETAILED	E.BROWNELL	D.BURGESS	8/6/2025
CHECKED-REVIEWED	E.BROWNELL	J.BURGESS	8/6/2025
DESIGN2-DETAILED2			
DESIGN3-DETAILED3			
REVISIONS 1			
REVISIONS 2			
REVISIONS 3			
REVISIONS 4			
FIELD CHANGES			

SIGNATURE

P.E. NUMBER

DATE

BRIDGE NO. 2774
CROSSING SMELT BROOK
PERRY

TEMPORARY
DETOUR PLAN - 2

SHEET NUMBER

13

OF 35

Date: 8/12/2025

Username: diana

Filename: C:\Users\diana\Dropbox\DCS-Projects\Thornton Tomasetti\26630_07\BRIDGE\PlanProfile_Detour.dgn

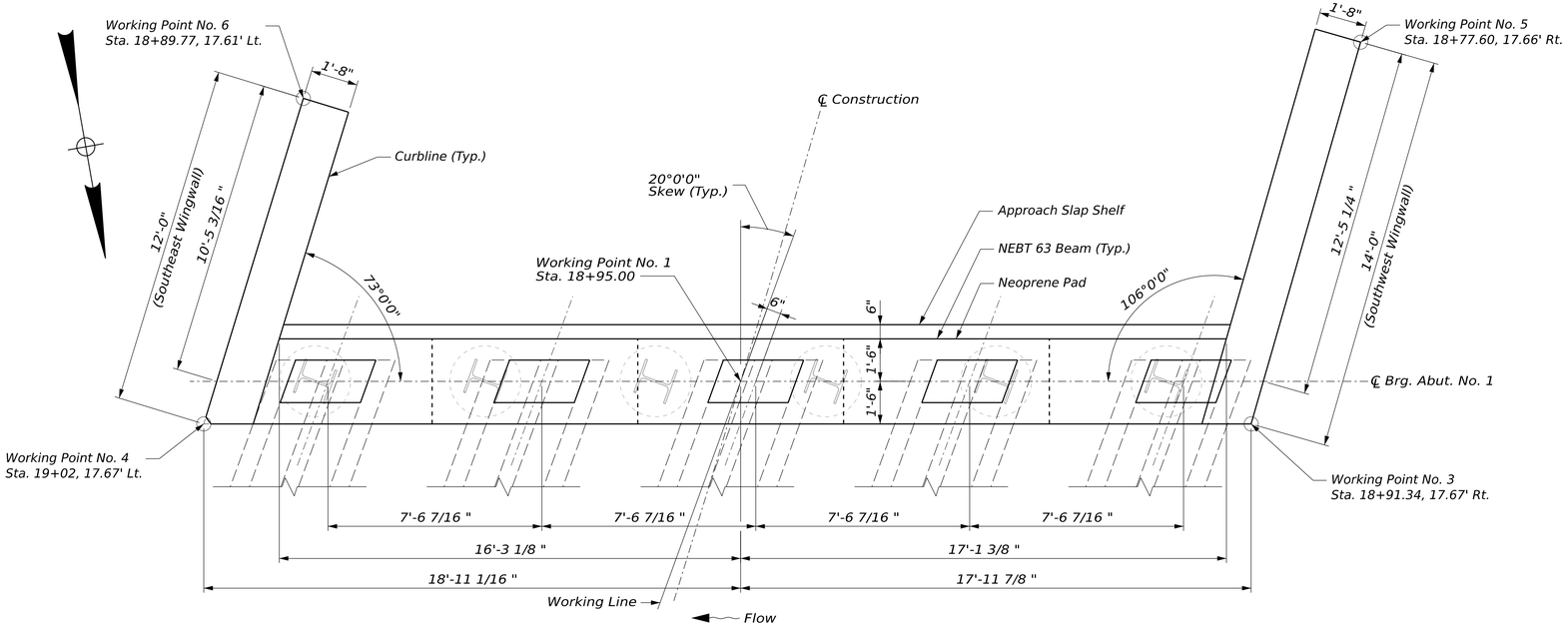

ABUTMENT NO. 1 - PLAN

BRIDGE SEAT ELEVATION - ABUTMENT NO. 1				
G5	G4	G3	G2	G1
22.52	22.92	23.32	23.73	23.84

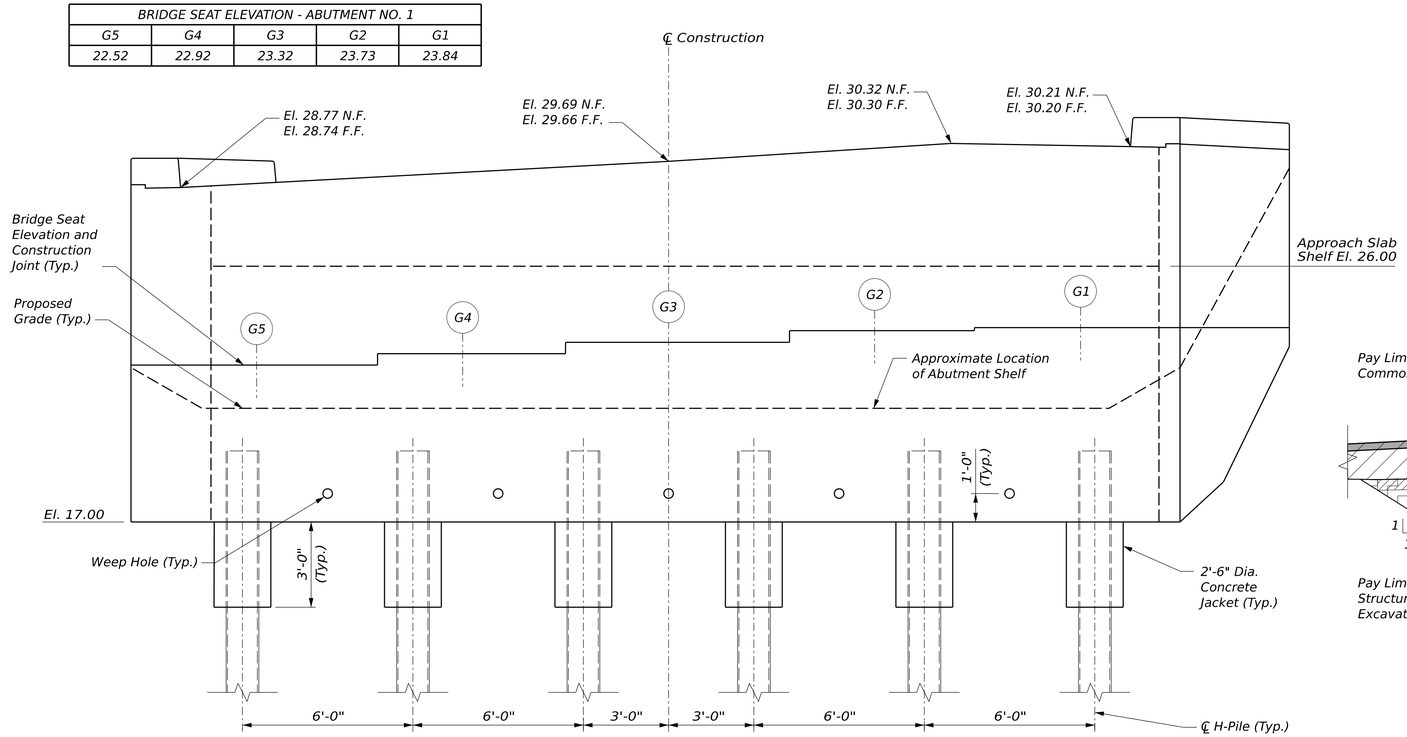

ABUTMENT NO. 1 - ELEVATION

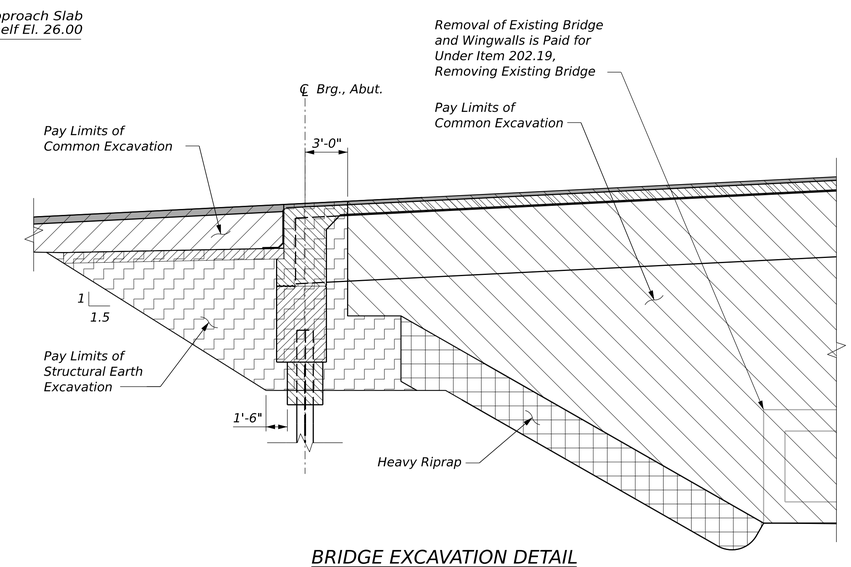

BRIDGE EXCAVATION DETAIL

ABUTMENT NOTES

1. Reinforcing steel shall have a minimum concrete cover of 2 inches.

2. Cover joints where waterstops are not required in accordance with Standard Details Section 502.

3. Place 4-inch diameter drains in the breastwall and wingwalls at 10 feet maximum spacing. The exact location will be determined by the Resident.

4. Payment for the concrete jackets around the tops of the H-piles will not be paid for directly but will be considered incidental to Pay Item 502.219 Structural Concrete Abutments and Retaining Walls. Fill Concrete may be used for the concrete jackets.

5. Abutments, wingwalls, and their footings shall be backfilled with Granular Borrow. Pay limits will be the structural excavation limits.

PILE NOTES

1. The maximum factored pile load is 355 kips at the Strength Limit State.

2. Estimate of piles required:

   Abutment No. 1: 6 ~HP 14x117 at 25 feet
   Abutment No. 2: 6 ~HP 14x117 at 25 feet

3. H-pile material shall be ASTM A572, Grade 50.

4. H-pile splices shall be in accordance with Standard Detail 501(03).

5. Piles shall be placed in accordance with Special Provision Section 501 (Rock-Socketed H-Pile Foundation) of the Contract Documents.

6. Piles shall not be out of position shown by more than 2 inches in any direction.

STATE OF MAINE
DEPARTMENT OF TRANSPORTATION

Federal Project No. 02663007

WIN 026630.07

PROJ MANAGER	MARK PARLIN		
DESIGN-DETAILED	E.BROWNELL	D.BURGESS	8/6/2025
CHECKED-REVIEWED	E.BROWNELL	J.BURGESS	8/6/2025
DESIGN2-DETAILED2			
DESIGN3-DETAILED3			
REVISIONS 1			
REVISIONS 2			
REVISIONS 3			
REVISIONS 4			
FIELD CHANGES			

SIGNATURE

P.E. NUMBER

DATE

BRIDGE NO. 2774
CROSSING SMELT BROOK
PERRY

ABUTMENT NO. 1
PLAN AND ELEVATION

SHEET NUMBER

22

OF 35

Date: 8/12/2025

Username: diana

Filename: C:\Users\diana\Dropbox\DCS-Projects\Thornton Tomasetti\26630_07\BRIDGE\Substructures.dgn

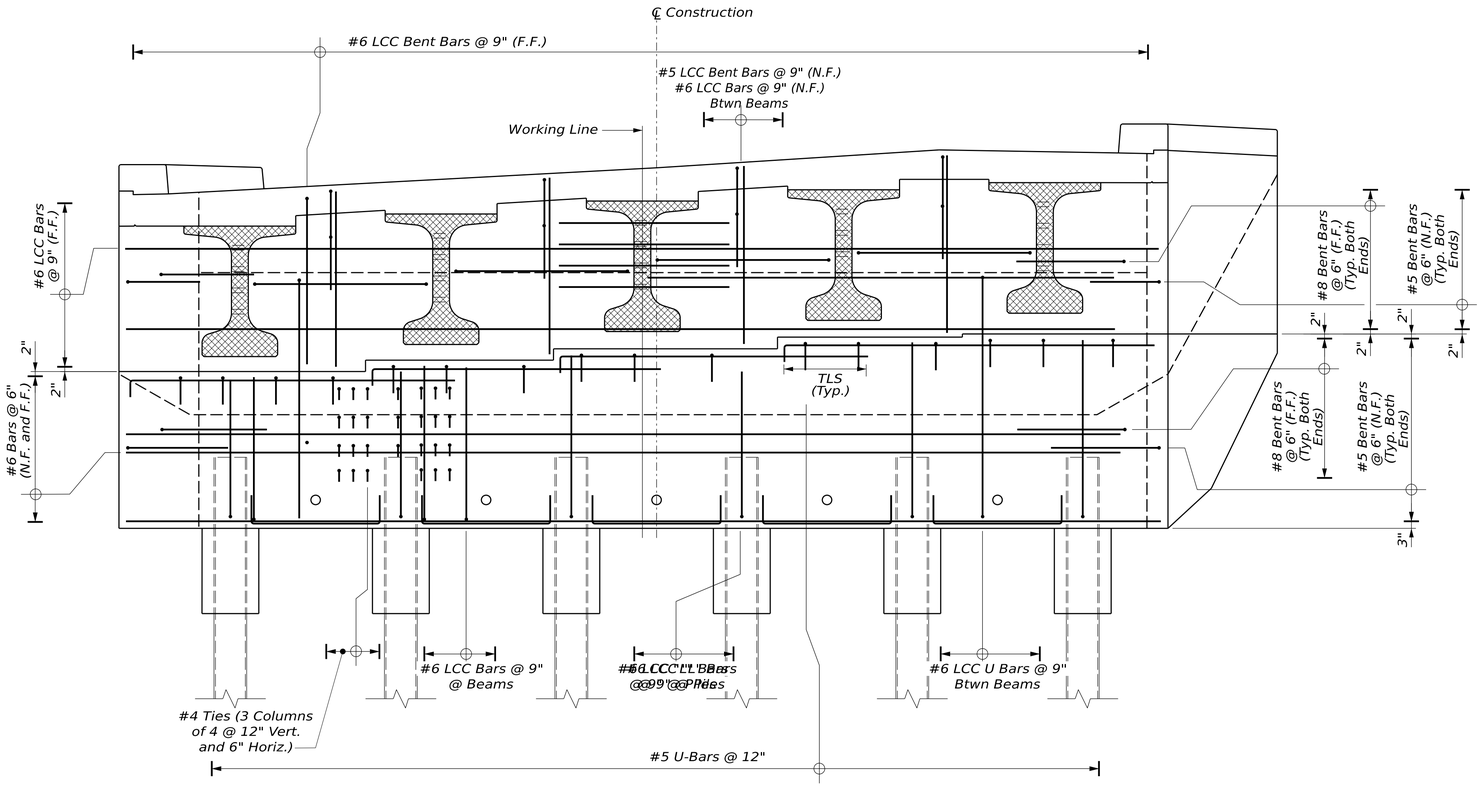

TYPICAL ABUTMENT REINFORCEMENT ELEVATION

Abutment No. 1 Shown, Abutment No. Similar

Notes:

1. Reinforcement shown is typical unless noted otherwise. Details are provided to show required size and spacing. Reinforcing schedule, bar layout, and bending diagrams have not been provided and are incidental to the related Contract Items.

2. All bars below construction joint (bridge seat) shall be plain reinforcing steel. All bars placed or extending above construction joint shall be low carbon chromium (LCC) reinforcing steel.

Legend:

LCC = Low Carbon Chromium
N.F. = Near Face
F.F. = Far Face
E.F. = Each Face
TLS = Tension Lap Splice

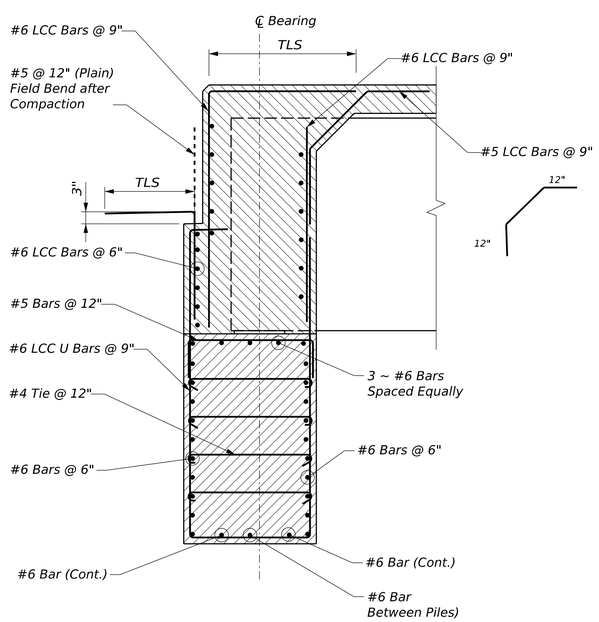

ABUTMENT SECTION BETWEEN PILES AND BEAMS

Abutment No. 1 Shown, Abutment No. 2 Similar

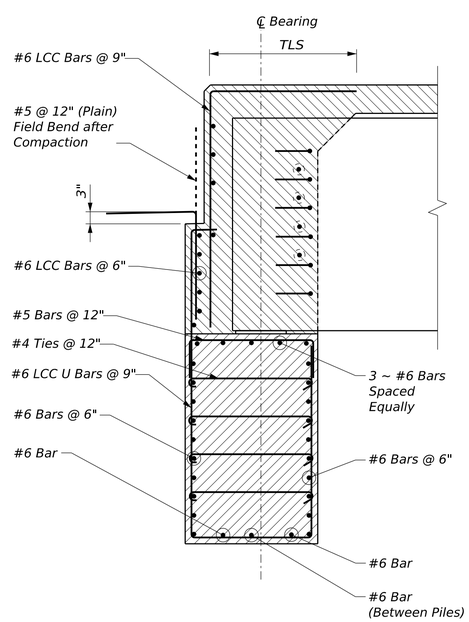

ABUTMENT SECTION AT BEAM

Abutment No. 1 Shown, Abutment No. 2 Similar

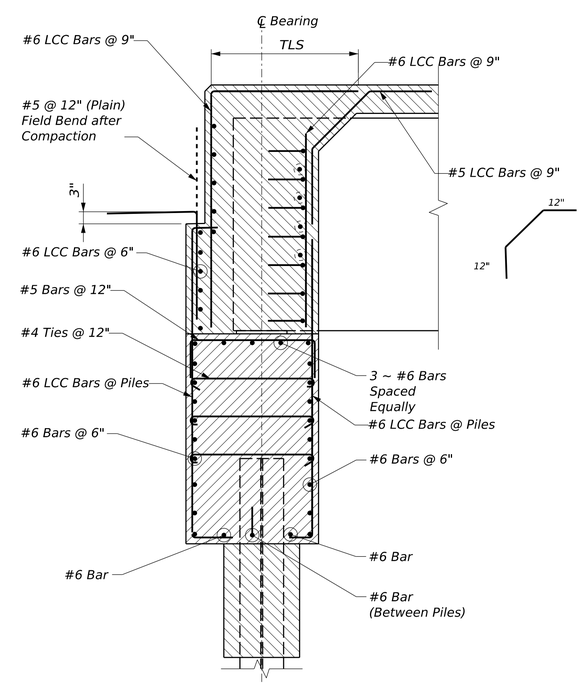

ABUTMENT SECTION AT PILES

Abutment No. 1 Shown, Abutment No. 2 Similar

STATE OF MAINE
DEPARTMENT OF TRANSPORTATION

Federal Project No. 02663007

WIN 026630.07

PROJ MANAGER	MARK PARLIN		
DESIGN-DETAILED	E.BROWNELL	D.BURGESS	8/6/2025
CHECKED-REVIEWED	E.BROWNELL	J.BURGESS	8/6/2025
DESIGN2-DETAILED2			
DESIGN3-DETAILED3			
REVISIONS 1			
REVISIONS 2			
REVISIONS 3			
REVISIONS 4			
FIELD CHANGES			

SIGNATURE

P.E. NUMBER

DATE

BRIDGE NO. 2774
CROSSING SMELT BROOK
PERRY

ABUTMENT REINFORCEMENT

SHEET NUMBER

23

OF 35

Date: 8/12/2025

Username: diana

Filename: C:\Users\diana\Dropbox\DCS-Projects\Thornton Tomasetti\26630_07\BRIDGE\Substructures.dgn

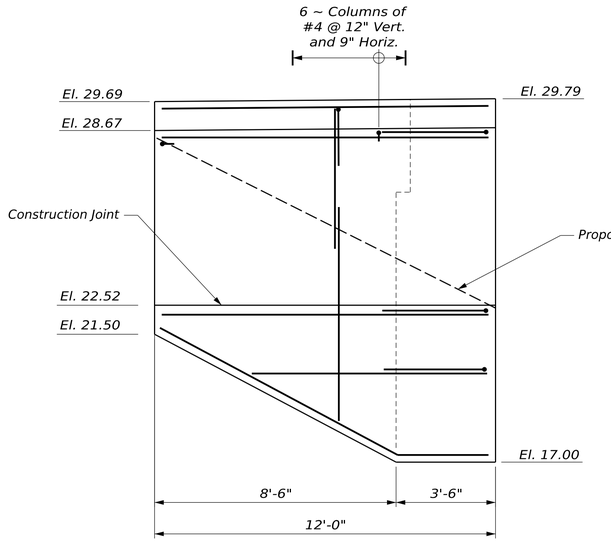

ABUTMENT NO. 1
SOUTHEAST WINGWALL ELEVATION

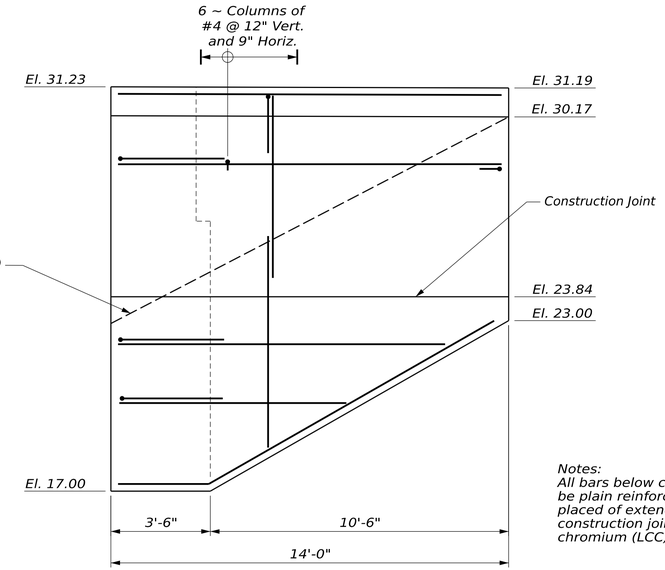

Notes:
All bars below construction joint to be plain reinforcing steel. All bars placed of extending above construction joint to be low carbon chromium (LCC) reinforcing steel.

ABUTMENT NO. 1
SOUTHWEST WINGWALL ELEVATION

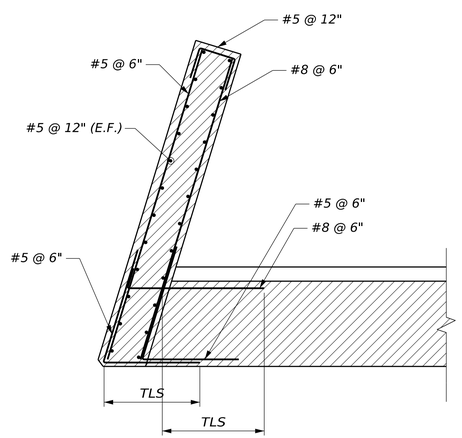

ABUTMENT NO. 1
SOUTHEAST WINGWALL PLAN

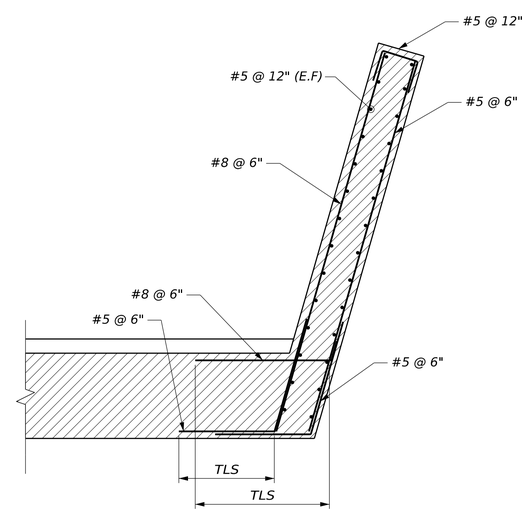

ABUTMENT NO. 1
SOUTHWEST WINGWALL ELEVATION

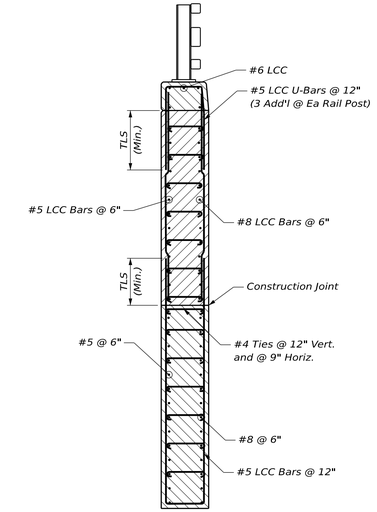

WINGWALL REINFORCEMENT SECTION

STATE OF MAINE
DEPARTMENT OF TRANSPORTATION

Federal Project No. 02663007

WIN 026630.07

PROJ MANAGER	MARK PARLIN		
DESIGN-DETAILED	E.BROWNELL	D.BURGESS	8/6/2025
CHECKED-REVIEWED	E.BROWNELL	J.BURGESS	8/6/2025
DESIGN2-DETAILED2			
DESIGN3-DETAILED3			
REVISIONS 1			
REVISIONS 2			
REVISIONS 3			
REVISIONS 4			
FIELD CHANGES			

SIGNATURE

P.E. NUMBER

DATE

BRIDGE NO. 2774
CROSSING SMELT BROOK
PERRY

ABUTMENT NO. 1
WINGWALLS

SHEET NUMBER

24

OF 35

Date: 8/12/2025

Username: diana

Filename: C:\Users\diana\Dropbox\DCS-Projects\Thornton Tomasetti\26630_07\BRIDGE\Substructures.dgn

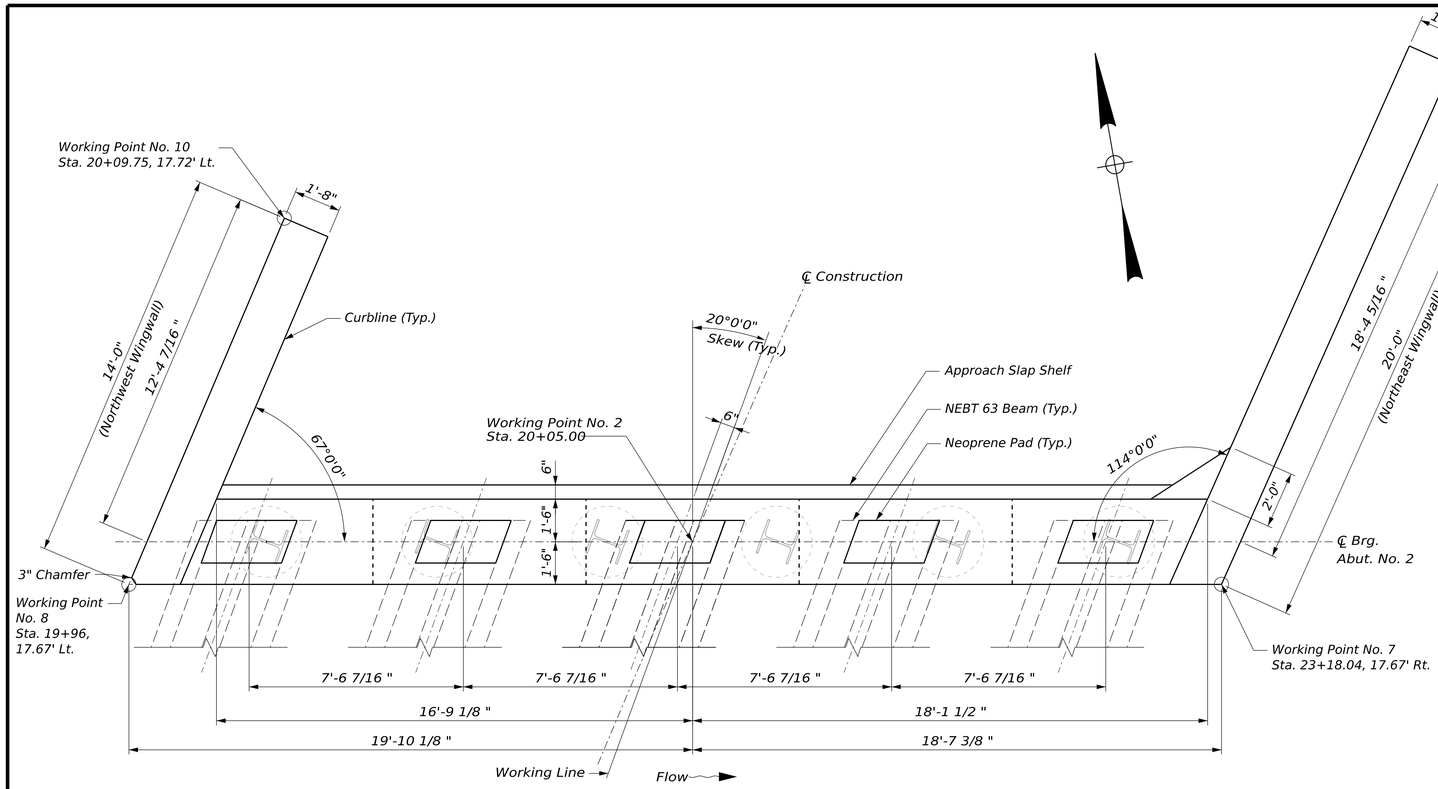

ABUTMENT NO. 2 - PLAN

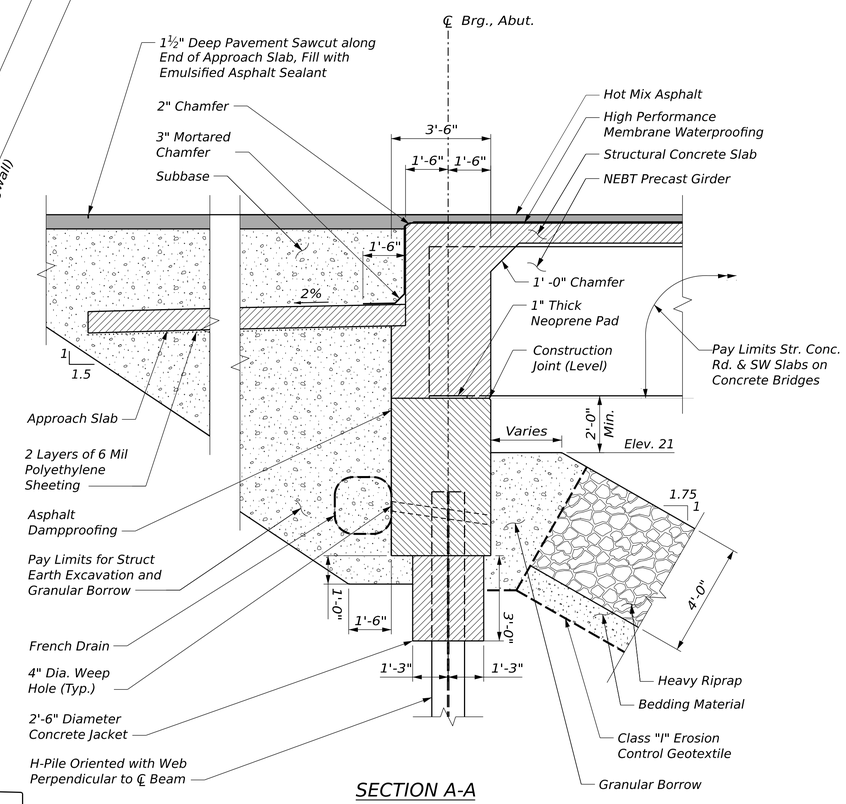

SECTION A-A

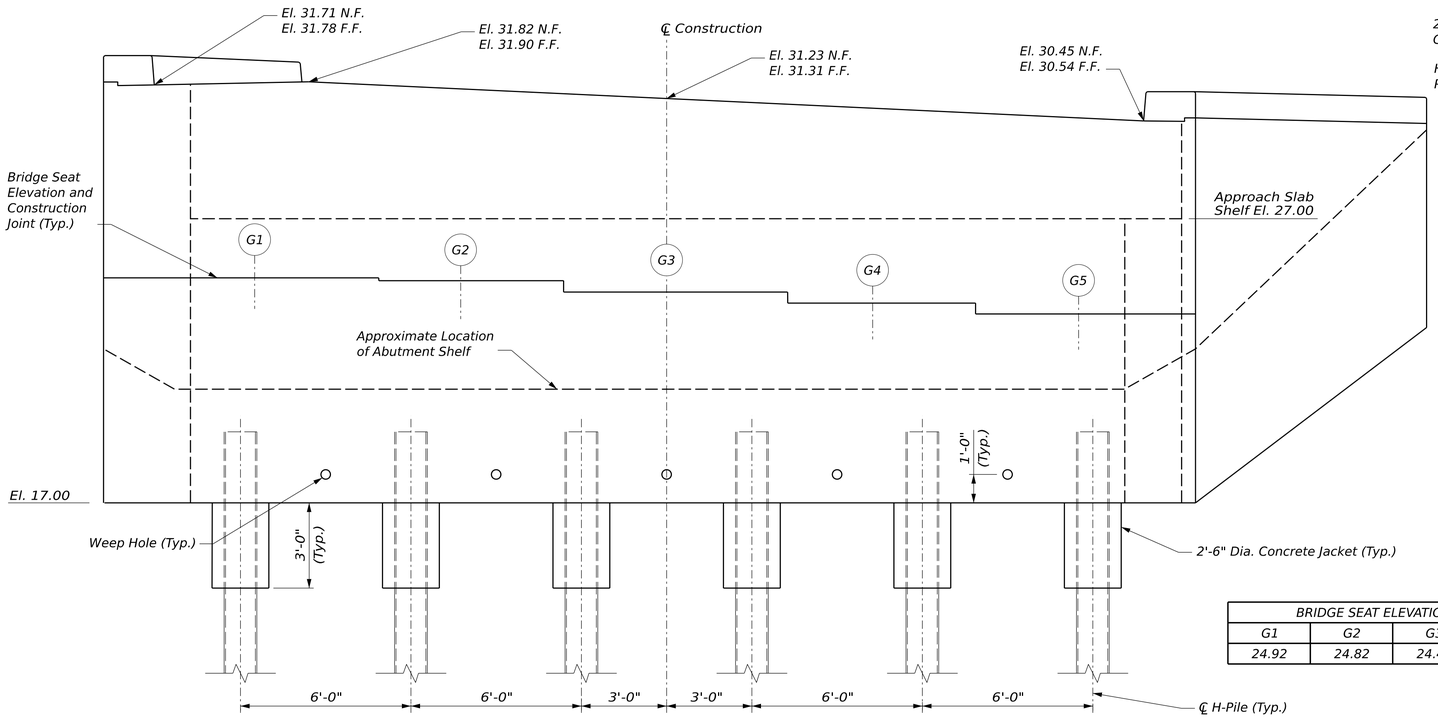

ABUTMENT NO. 2 - ELEVATION

Notes:

1. Transverse Sawcuts in the pavement at the ends of the approach slabs shall be sealed with emulsified asphalt sealing compound conforming to Specification 702.12. The sawcut and emulsified sealing shall not be paid for directly, but considered incidental to related Contract Items.

2. Payment for mortared chamfer at approach slabs shall not be paid for directly, but shall be considered incidental to related Contract Items.

3. Asphalt Dampproofing shall meet the requirements of either ASTM D449 Type II, ASTM D1227 Type II-Class, or ASTM D1227 Type III-Class I. The product shall be applied in accordance with the manufacturer's recommendations.

4. Asphalt Damproffing shall be applied to the backside of the wingwalls up to 1 foot below grade, in addition to the locations shown in Section A-A.

5. Payment for Asphalt Dampproofing will not be made directly, but qwill be considered incidental to related Contract Items.

BRIDGE SEAT ELEVATION - ABUTMENT NO. 2				
G1	G2	G3	G4	G5
24.92	24.82	24.42	24.03	23.65

STATE OF MAINE
DEPARTMENT OF TRANSPORTATION

Federal Project No. 02663007

WIN 026630.07

PROJ. MANAGER	MARK PARLIN		
DESIGN-DETAILED	E.BROWNELL	D.BURGESS	8/6/2025
CHECKED-REVIEWED	E.BROWNELL	J.BURGESS	8/6/2025
DESIGN2-DETAILED2			
DESIGN3-DETAILED3			
REVISIONS 1			
REVISIONS 2			
REVISIONS 3			
REVISIONS 4			
FIELD CHANGES			

SIGNATURE

P.E. NUMBER

DATE

BRIDGE NO. 2774
CROSSING SMELT BROOK
PERRY

ABUTMENT NO. 2
PLAN AND ELEVATION

SHEET NUMBER

25

OF 35

Date: 8/12/2025

Username: diana

Filename: C:\Users\diana\Dropbox\DCS-Projects\Thornton Tomasetti\26630_07\BRIDGE\Substructures.dgn

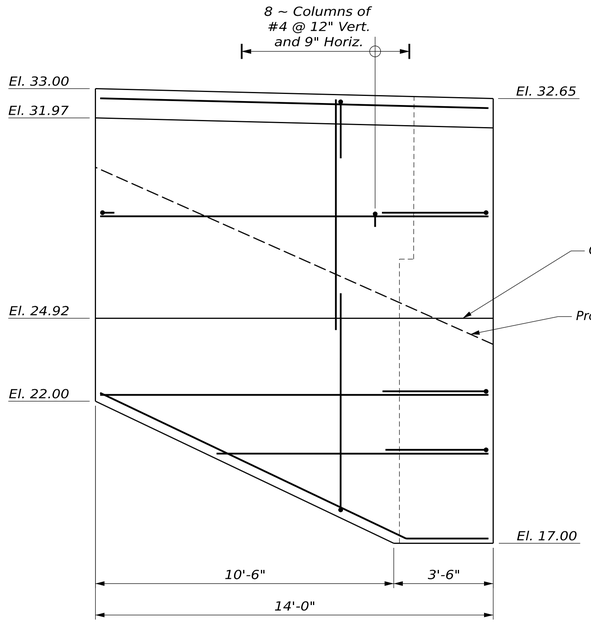

ABUTMENT NO. 2
NORTHWEST WINGWALL ELEVATION

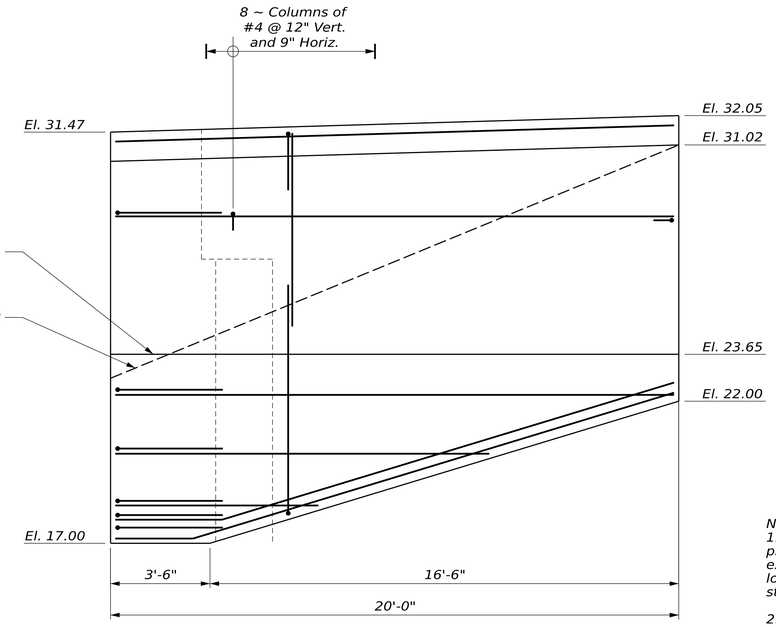

ABUTMENT NO. 2
NORTHEAST WINGWALL ELEVATION

Construction Joint

Proposed Grade (Typ.)

Notes:
1. All bars below construction joint to be plain reinforcing steel. All bars placed of extending above construction joint to be low carbon chromium (LCC) reinforcing steel.

2. See Abutment No. 1 Wingwalls and Reinforcement for additional reinforcement details.

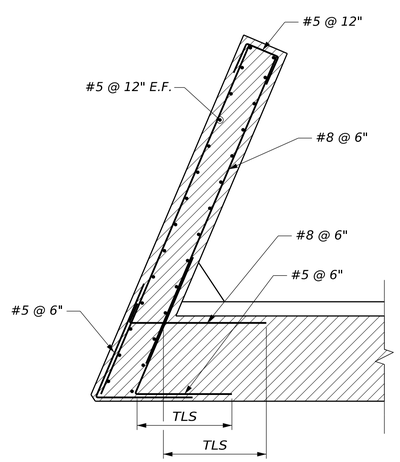

ABUTMENT NO. 2
SOUTHEAST WINGWALL PLAN SECTION

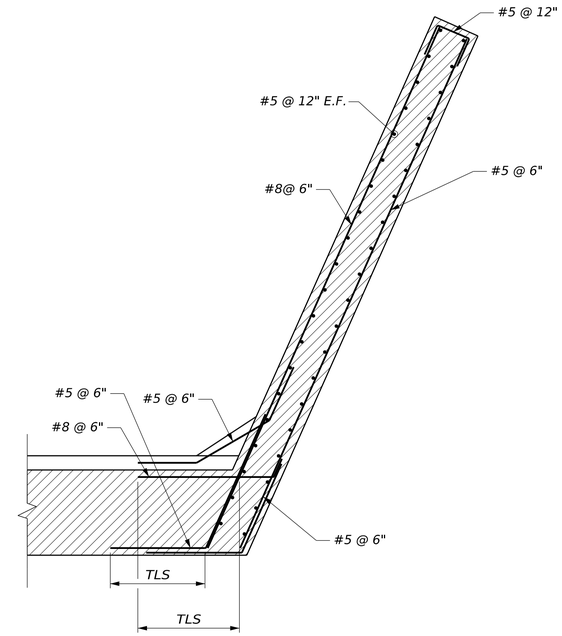

ABUTMENT NO. 2
NORTHEAST WINGWALL PLAN SECTION

STATE OF MAINE
DEPARTMENT OF TRANSPORTATION

Federal Project No. 02663007

WIN 026630.07

SIGNATURE

P.E. NUMBER

DATE

		BY	DATE
PROJ MANAGER	MARK PARLIN		
DESIGN-DETAILED	E.BROWNELL	D.BURGESS	8/6/2025
CHECKED-REVIEWED	E.BROWNELL	J.BURGESS	8/6/2025
DESIGN2-DETAILED2			
DESIGN3-DETAILED3			
REVISIONS 1			
REVISIONS 2			
REVISIONS 3			
REVISIONS 4			
FIELD CHANGES			

BRIDGE NO. 2774
CROSSING SMELT BROOK
PERRY

ABUTMENT NO. 2
WINGWALLS

SHEET NUMBER

26

OF 35

Date: 8/12/2025

Username: diana

Filename: C:\Users\diana\Dropbox\DCS-Projects\Thornton Tomasetti\26630_07\BRIDGE\Substructures.dgn

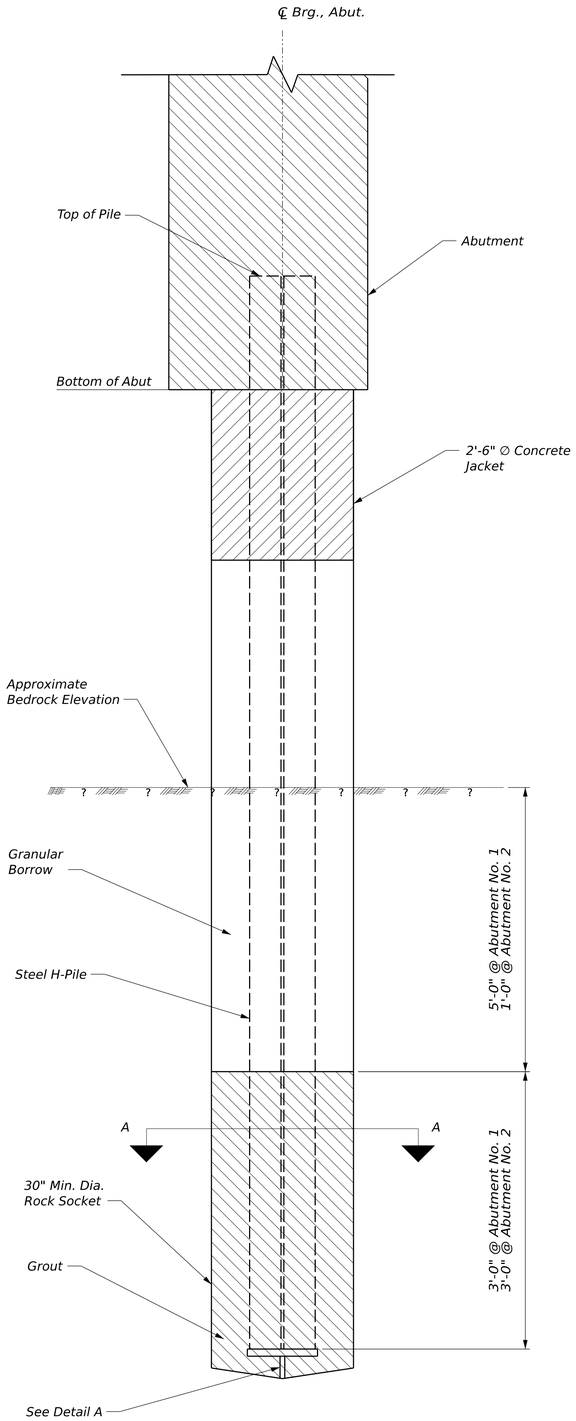

ROCK SOCKETED PILE DETAIL

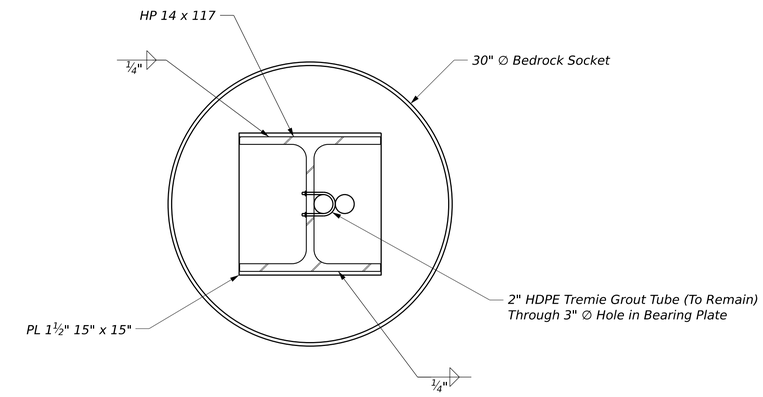

Section A-A
(Shown prior to grouting)

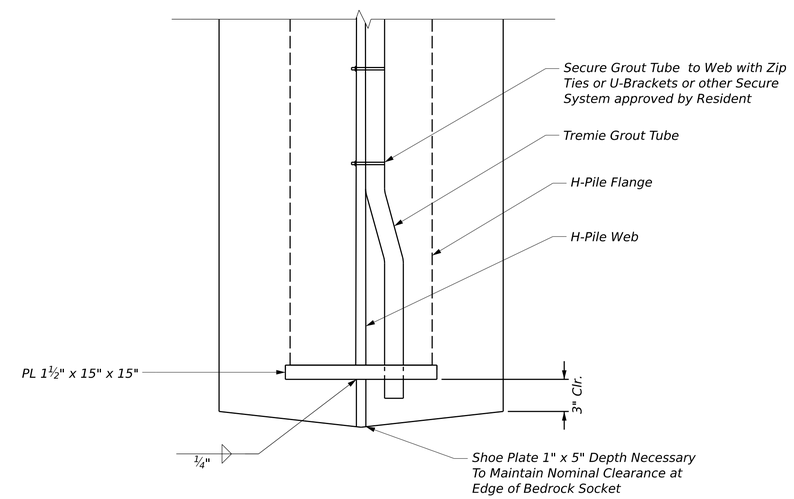

Detail A
(Shown prior to grouting)

Abutment	Offset	Bottom of Abutment (ft) Elevation	Approximate Top of Bedrock Elevation (ft)	Estimated Top of Grout Elevation (ft)	Estimated Bottom of Pile Elevation (ft)	Estimated Pile Length (ft)
1	LT	17.00	9.00	4.00	1.00	25.00
1	RT	17.00	7.00	2.00	-1.00	25.00
2	LT	17.00	0.00	-1.00	-4.00	25.00
2	RT	17.00	0.00	-1.00	-4.00	25.00

PILE NOTES

1. Approximate top of bedrock elevations are based on widely spaced explorations. Actual bedrock elevations may vary.

2. Top of Bedrock is defined as the elevation at which the full diameter of the rock excavation equipment is beneath the bedrock surface, as determined by the Resident.

3. Estimated top of grout elevation is a minimum of 5' below the bottom of abutment and a minimum of 1' below the top of bedrock.

4. Estimated pile lengths are based on approximate bedrock elevations. Required pile lengths may vary, depending on actual bedrock elevations.

STATE OF MAINE
DEPARTMENT OF TRANSPORTATION

Federal Project No. 02663007

WIN 026630.07

SIGNATURE

P.E. NUMBER

DATE

		BY	DATE
PROJ. MANAGER	MARK PARLIN		
DESIGN-DETAILED	E.BROWNELL	D.BURGESS	8/6/2025
CHECKED-REVIEWED	E.BROWNELL	J.BURGESS	8/6/2025
DESIGN2-DETAILED2		MJM	
DESIGN3-DETAILED3			
REVISIONS 1			
REVISIONS 2			
REVISIONS 3			
REVISIONS 4			
FIELD CHANGES			

BRIDGE NO. 2774
CROSSING SMELT BROOK
PERRY

ROCK SOCKET DETAILS

SHEET NUMBER

27

OF 35

Date: 8/12/2025

Username: diana

Filename: C:\Users\diana\Dropbox\DCS-Projects\Thornton Tomasetti\26630_07\BRIDGE\Substructures.dgn

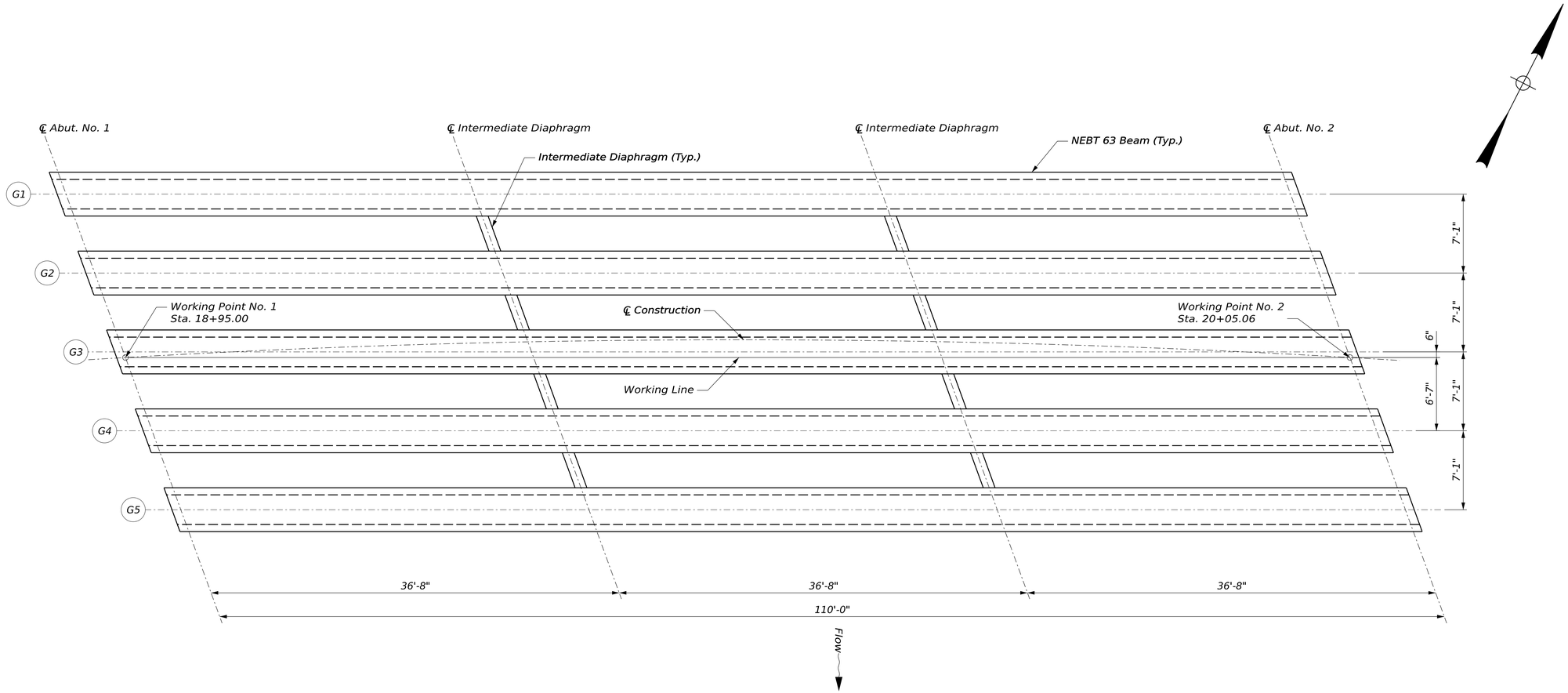

FRAMING PLAN

STATE OF MAINE
DEPARTMENT OF TRANSPORTATION

Federal Project No. 02663007

WIN 026630.07

PROJ. MANAGER	MARK PARLIN		
DESIGN-DETAILED	E.BROWNELL	D.BURGESS	8/6/2025
CHECKED-REVIEWED	E.BROWNELL	J.BURGESS	8/6/2025
DESIGN2-DETAILED2			
DESIGN3-DETAILED3			
REVISIONS 1			
REVISIONS 2			
REVISIONS 3			
REVISIONS 4			
FIELD CHANGES			

SIGNATURE

P.E. NUMBER

DATE

BRIDGE NO. 2774
CROSSING SMELT BROOK
PERRY

FRAMING PLAN

SHEET NUMBER

28

OF 35

Date: 8/12/2025

Username: diana

Filename: C:\Users\diana\Dropbox\DCS-Projects\Thornton Tomasetti\26630_07\BRIDGE\Superstructures Framing.dgn

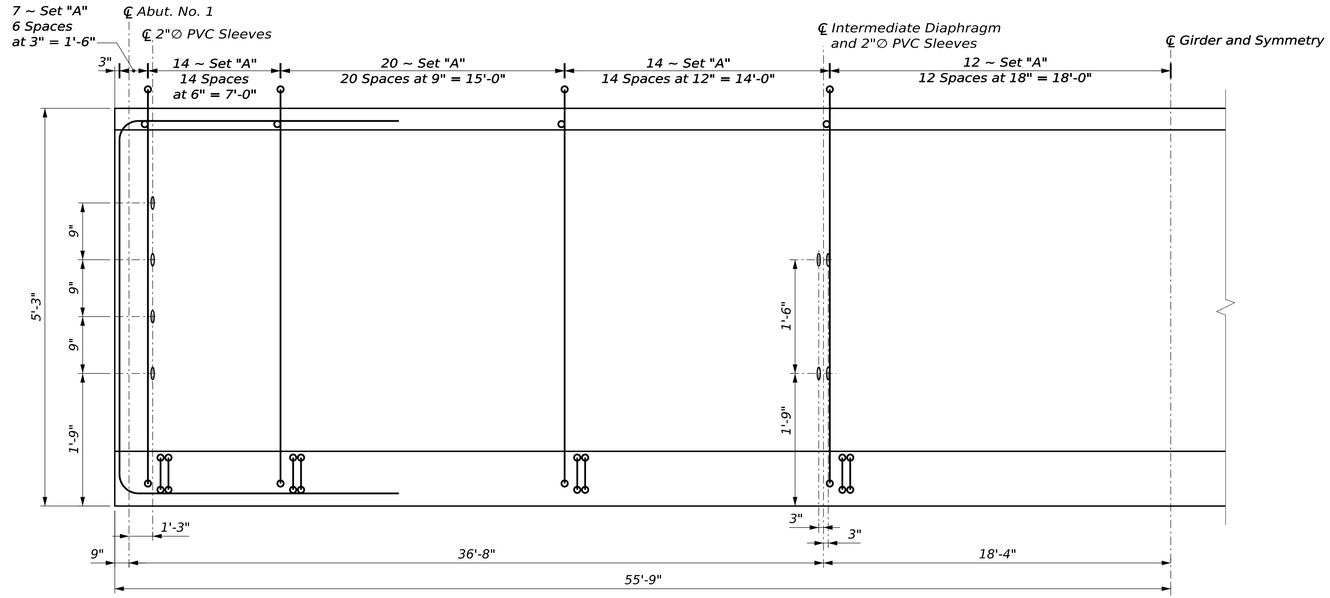

NEBT 63 PRECAST GIRDER ELEVATION

(Vertical Scale Exaggerated for Clarity)

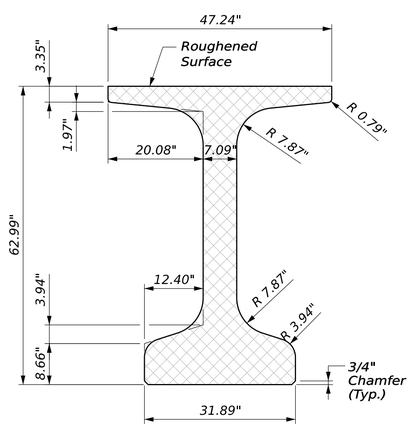

TYPICAL BEAM SECTION

NEBT 63

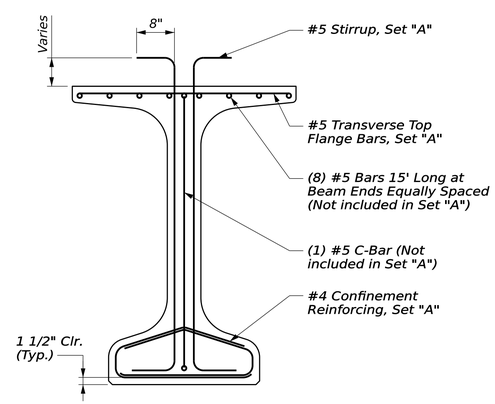

BEAM REINFORCING

Set "A"

(See Precast Girder Elevation for Spacing)

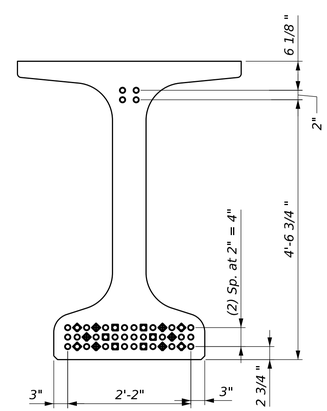

PRESTRESSING STRANDS

PRESTRESSING LEGEND

- (30) 0.6"∅ Strand
- (6) Strand Debonded 7'-4"
- (6) Strand Debonded 14'-8"
- (4) Strand Debonded 22'-0"

PRECAST CONCRETE SUPERSTRUCTURE NOTES

1. Prestressing strands shall be 0.6-in. diameter. The tensioning force is 44 kips per prestressing strand including the top strands.

2. Reinforcing steel shall have a minimum concrete cover of 2 inches unless otherwise noted.

3. Unless otherwise noted, rake the top surface of the upper flange of the prestressed beams to a surface roughness of +/- 1/4", except at locations corresponding to the blocking points. At these locations, finish a flattened area of sufficient size to facilitate taking elevations for setting the bottom of slab.

4. Do not drill or use powder actuated tools on the prestressed beams without the approval of the Fabrication Engineer.

5. The estimated camber at release is 1.78 inches and the estimated camber at erection is 3.14 inches. Beam seat elevations are set for a minimum of 1 inch haunch at mid-span. Refer to Special Provision 535, Precast, Prestressed Concrete Superstructure - Camber.

6. All mild reinforcing shall be LCC Reinforcing Steel, ASTM A615, Grade 60.

7. At girder diaphragm locations, 2 inch diameter PVC sleeves shall be provided. All sleeves and threaded inserts shall be placed perpendicular to the girder.

8. Suggested end zone reinforcement may be adjusted by Fabricator to reflect Fabricator's experience and to reduce the potential for cracking. All adjustments shall be clearly flagged on the girder shop drawings and will be subject to Engineer's approval.

9. Threaded inserts shall not interfere with the prestressing strands. Payment for fabrication and installation shall be incidental to Item 535.61. Prestressed Structural Concrete I-Girders.

10. Neoprene pads shall be either polycholorprene or natural polyisoprene of 50 +/- 5 Shore A durometer hardness, and shall conform to the requirements of Division 2, Section 18.2 of AASHTO Standard Specifications for Highway Bridges. Neoprene pads will not be paid for directly, but will be considered incidental to related Contract Items.

STATE OF MAINE
DEPARTMENT OF TRANSPORTATION

Federal Project No. 02663007

WIN 026630.07

SIGNATURE

P.E. NUMBER

DATE

PROJ MANAGER	MARK PARLIN	BY	DATE
DESIGN-DETAILED	E.BROWNELL	D.BURGESS	8/6/2025
CHECKED-REVIEWED	E.BROWNELL	J.BURGESS	8/6/2025
DESIGN2-DETAILED2			
DESIGN3-DETAILED3			
REVISIONS 1			
REVISIONS 2			
REVISIONS 3			
REVISIONS 4			
FIELD CHANGES			

BRIDGE NO. 2774
CROSSING SMELT BROOK
PERRY

GIRDER DETAILS (1 OF 2)

SHEET NUMBER

29

OF 35

Date: 8/12/2025

Username: diana

Filename: C:\Users\diana\Dropbox\DCS-Projects\Thornton Tomasetti\26630_06\BRIDGE\Superstructures Framing.dgn

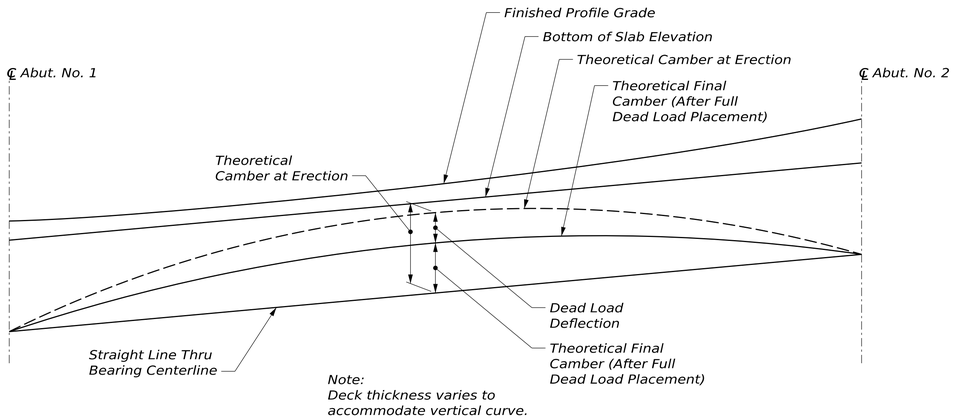

GIRDER CAMBER DIAGRAM

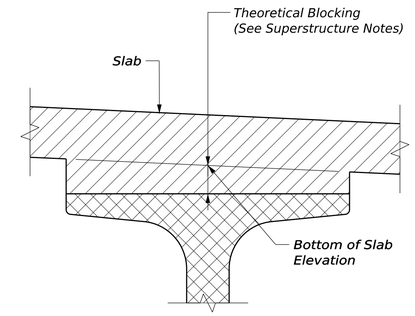

BLOCKING DETAIL

BOTTOM OF SLAB ELEVATIONS											
GIRDER	℄ BRG. ABUT. NO. 1	0.1xL	0.2xL	0.3xL	0.4xL	0.5xL	0.6xL	0.7xL	0.8xL	0.9xL	℄ BRG. ABUT. NO. 2
G1	29.55	29.70	29.85	29.99	29.99	30.12	30.24	30.43	30.50	30.57	30.63
G2	29.43	29.54	29.66	29.77	29.77	29.88	30.10	30.20	30.31	30.42	30.53
G3	29.03	29.14	29.25	29.37	29.37	29.48	29.70	29.81	29.91	30.02	30.13
G4	28.63	28.74	28.85	28.97	28.97	29.08	29.30	29.41	29.52	29.63	29.74
G5	28.22	28.33	28.44	28.56	28.56	28.67	28.90	29.01	29.12	29.24	29.36

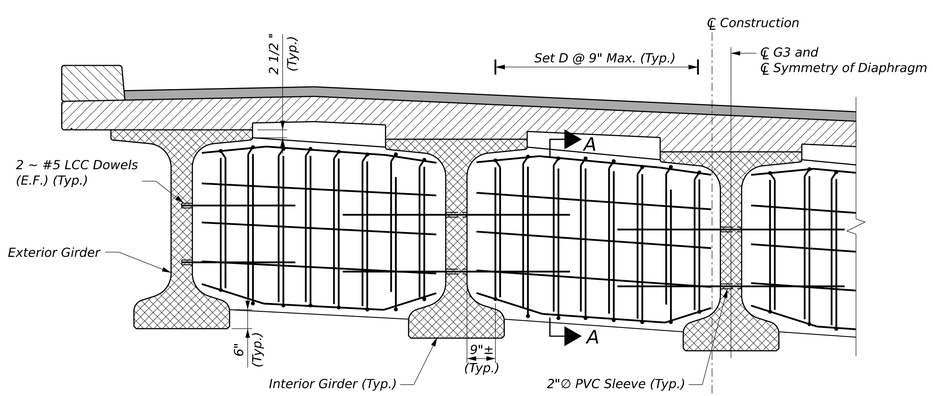

INTERMEDIATE DIAPHRAGM ELEVATION
(Bays 1 and 2 Shown, Bays 3 and 4 Similar)

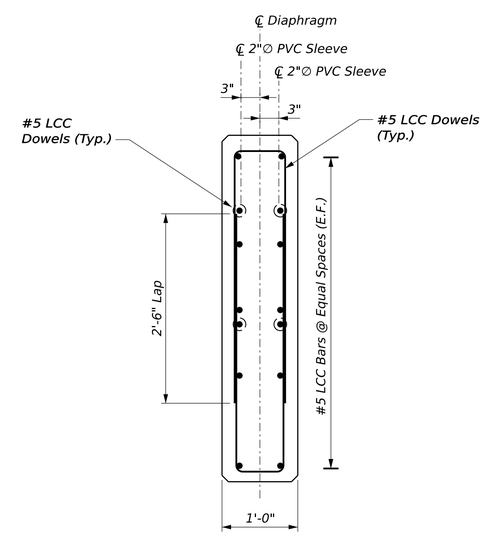

SECTION A-A

STATE OF MAINE
DEPARTMENT OF TRANSPORTATION

Federal Project No. 02663007

WIN 026630.07

PROJ MANAGER	MARK PARLIN		
DESIGN-DETAILED	E.BROWNELL	D.BURGESS	8/6/2025
CHECKED-REVIEWED	E.BROWNELL	J.BURGESS	8/6/2025
DESIGN2-DETAILED2			
DESIGN3-DETAILED3			
REVISIONS 1			
REVISIONS 2			
REVISIONS 3			
REVISIONS 4			
FIELD CHANGES			

SIGNATURE

P.E. NUMBER

DATE

BRIDGE NO. 2774
CROSSING SMELT BROOK
PERRY

GIRDER DETAILS (2 OF 2)

SHEET NUMBER
30
OF 35

Date: 8/12/2025

Username: diana

Filename: C:\Users\diana\Dropbox\DCS-Projects\Thornton Tomasetti\26630_06\BRIDGE\Superstructures Framing.dgn

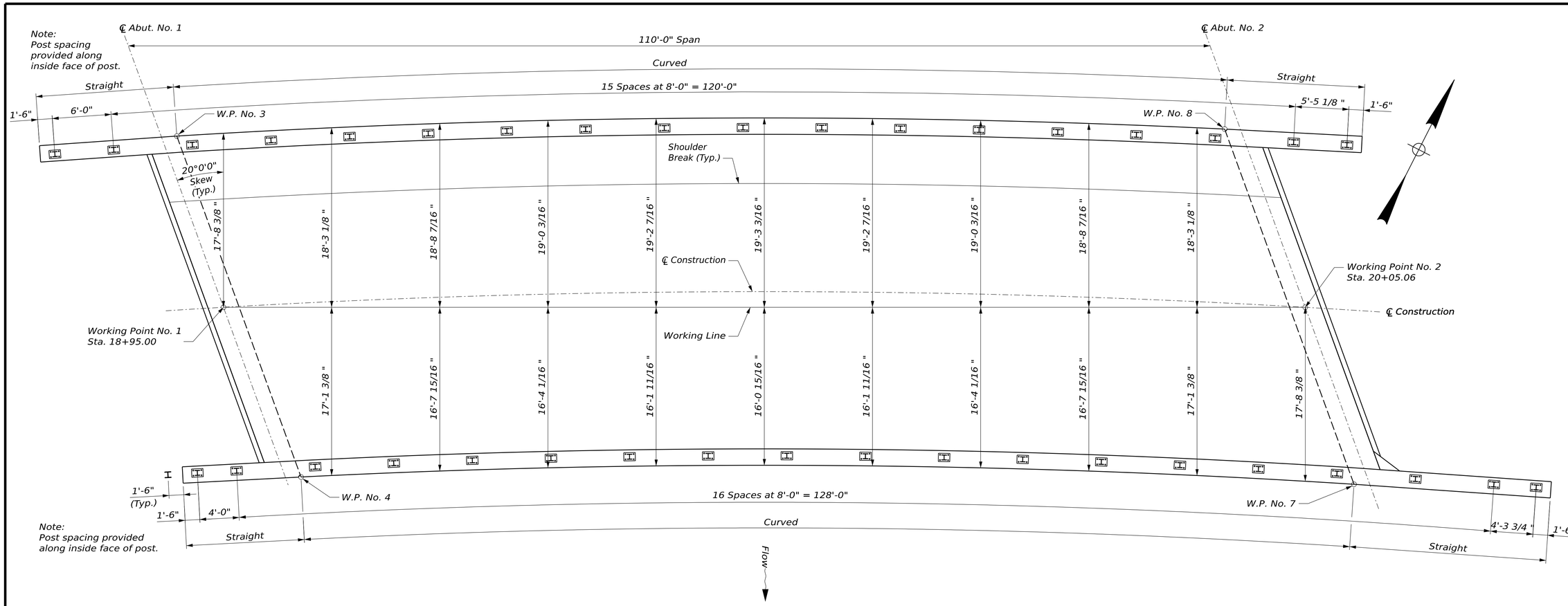

SUPERSTRUCTURE PLAN

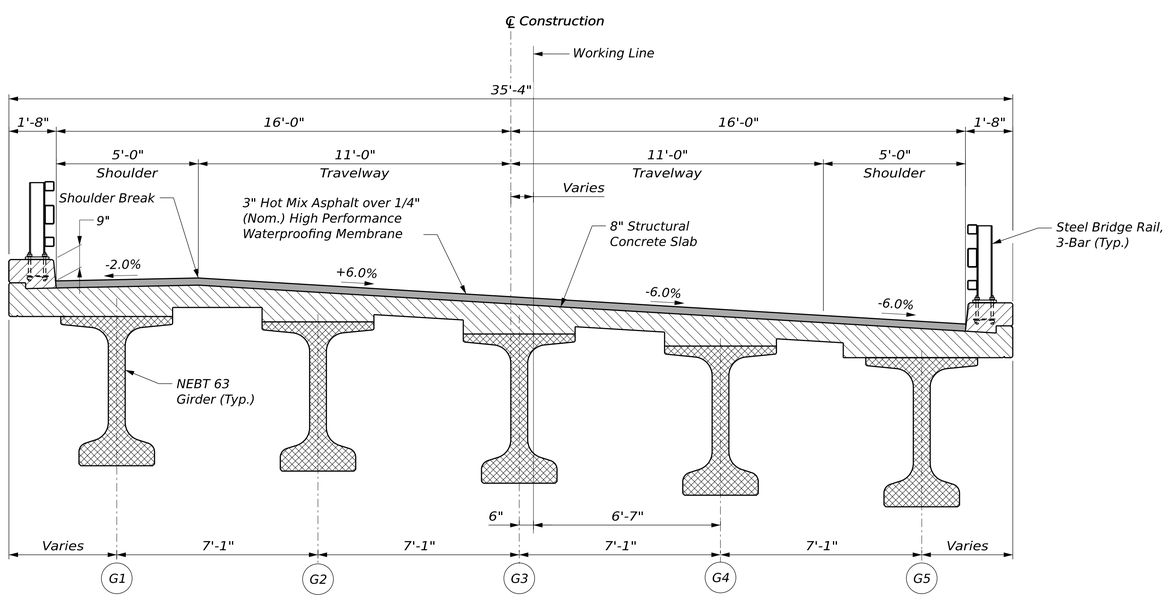

PRELIMINARY TRANSVERSE SECTION

SUPERSTRUCTURE NOTES

1. Reinforcing steel shall have a minimum concrete cover of 2 inches unless otherwise noted.

2. The superstructure slab and end diaphragm shall be placed in one continuous operation and the concrete shall be kept plastic until the entire placement has been made.

3. The theoretical blocking used for design of the structure is 4 1/2 inches at the centerline of bearing of the abutments. Refer to Girder Details for blocking details.

4. Form a one inch V-groove on the fascias at the horizontal joint between the curb and slab.

5. Bar supports for GFRP reinforcement shall be plastic, dielectric material, or other approved material. See Special Provision Subsection 530.05 for additional requirements.

6. Precast Concrete Deck Panels are not allowed on this project.

7. End diaphragm concrete will be paid for under Item No. 506.261, Structural Concrete Roadway and Sidewalk Slabs on Concrete Bridges and shall be placed with the deck.

STATE OF MAINE
DEPARTMENT OF TRANSPORTATION

Federal Project No. 02663007

WIN 026630.07

SIGNATURE

P.E. NUMBER

DATE

		BY	DATE
PROJ MANAGER	MARK PARLIN		
DESIGN-DETAILED	E.BROWNELL	D.BURGESS	8/6/2025
CHECKED-REVIEWED	E.BROWNELL	J.BURGESS	8/6/2025
DESIGN2-DETAILED2			
DESIGN3-DETAILED3			
REVISIONS 1			
REVISIONS 2			
REVISIONS 3			
REVISIONS 4			
FIELD CHANGES			

BRIDGE NO. 2774
CROSSING SMELT BROOK
PERRY

SUPERSTRUCTURE PLAN AND TRANSVERSE SECTION

SHEET NUMBER

31

OF 35

Date: 8/12/2025

Username: diana

Filename: C:\Users\diana\Dropbox\DCS-Projects\Thornton Tomasetti\26630_07\BRIDGE\Superstructures.dgn

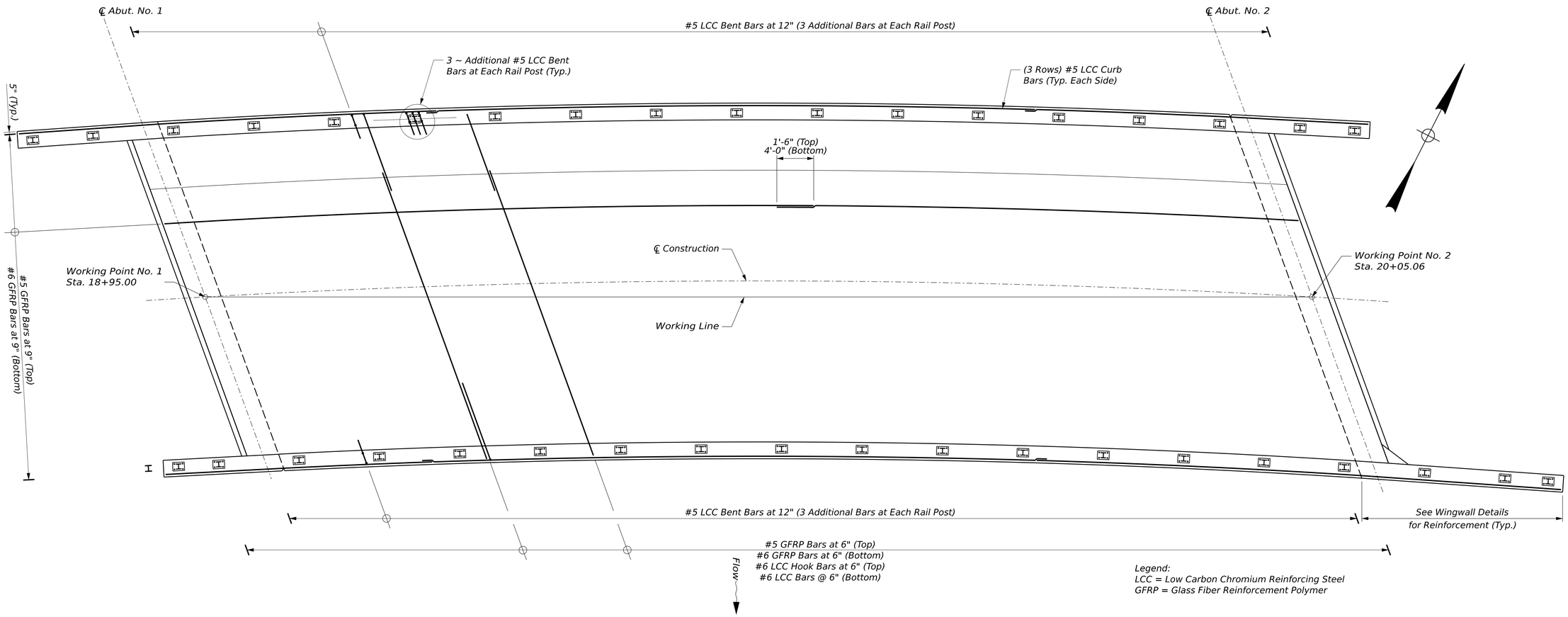

SUPERSTRUCTURE REINFORCEMENT PLAN

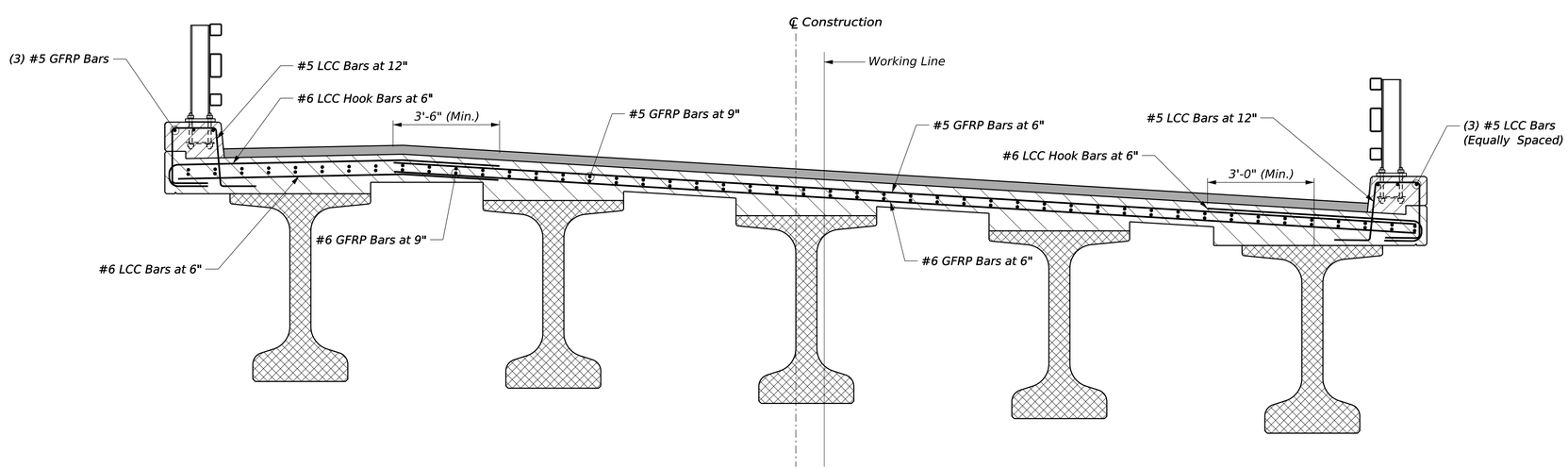

TRANSVERSE SECTION - REINFORCEMENT

STATE OF MAINE
DEPARTMENT OF TRANSPORTATION

Federal Project No. 02663007

WIN 026630.07

PROJ. MANAGER	MARK PARLIN		
DESIGN-DETAILED	E.BROWNELL	D.BURGESS	8/6/2025
CHECKED-REVIEWED	E.BROWNELL	J.BURGESS	8/6/2025
DESIGN2-DETAILED2			
DESIGN3-DETAILED3			
REVISIONS 1			
REVISIONS 2			
REVISIONS 3			
REVISIONS 4			
FIELD CHANGES			

SIGNATURE

P.E. NUMBER

DATE

BRIDGE NO. 2774
CROSSING SMELT BROOK
PERRY

SUPERSTRUCTURE REINFORCEMENT

SHEET NUMBER

32

OF 35

Date: 8/12/2025

Username: diana

Filename: C:\Users\diana\Dropbox\DCS-Projects\Thornton Tomasetti\26630_07\BRIDGE\Superstructures.dgn

PLAN LEGEND

Town, County, State
Approx. Property Lines
Existing Right of Way
Limits of Wrought Portion — LIMITS OF WROUGHT PORTION
Control Of Access
New Right of Way
New Easement
New Temporary Rights — TEMP. CONST. LIMITS
New R/W Within Existing R/W

New R/W Along Existing R/W
Building — Clearing Limit Line — CLL
Trees — Conifer — Deciduous
Tree Line — Bush Line
Water Edge
Ledge — Rock/Boulder — Flag Pole
Fence — CHAIN LINK — BARB WIRE — STOCKADE
Sign — Well — Mailbox

	Existing	Proposed
Sanitary Sewer		SA
Com. Line UG	COM	UG COMM
Electric Line	E	UG POW
Water Line	W	WL
Underdrain Line		
Gas Line	G	GAS
Guardrail		
Culvert		

	Existing	Proposed
Traveled Way		
Ditch		
Catch Basin		
Manhole		
Sewer Manhole		
Utlity Pole		
Fire Hydrant		
Curbing		

Cut Line — Fill Line
Stonewall — Retaining Wall
Baseline 10+00 11+00 12+00
Monument — Traverse Point
Iron Rod Set IRS — Pipe Found IPF

THIS PLAN WAS PREPARED IN CONNECTION WITH THE DEPARTMENT'S ACQUISITION OF REAL PROPERTY FOR TRANSPORTATION PURPOSES. IT CANNOT BE USED TO ESTABLISH LEGAL BOUNDARIES BETWEEN ABUTTING PROPERTY OWNERS.

25 0 25 50 75 100
Scale of Feet

STATE OF MAINE
REGISTRY OF DEEDS

COUNTY OF ____
RECEIVED ____ , 20____
AT ____ HRS. ____ MINS. ____ .M.
AND RECORDED IN
PLAN BOOK (OR FILE NO.) ____ , PAGE ____
ATTEST: ____
REGISTER

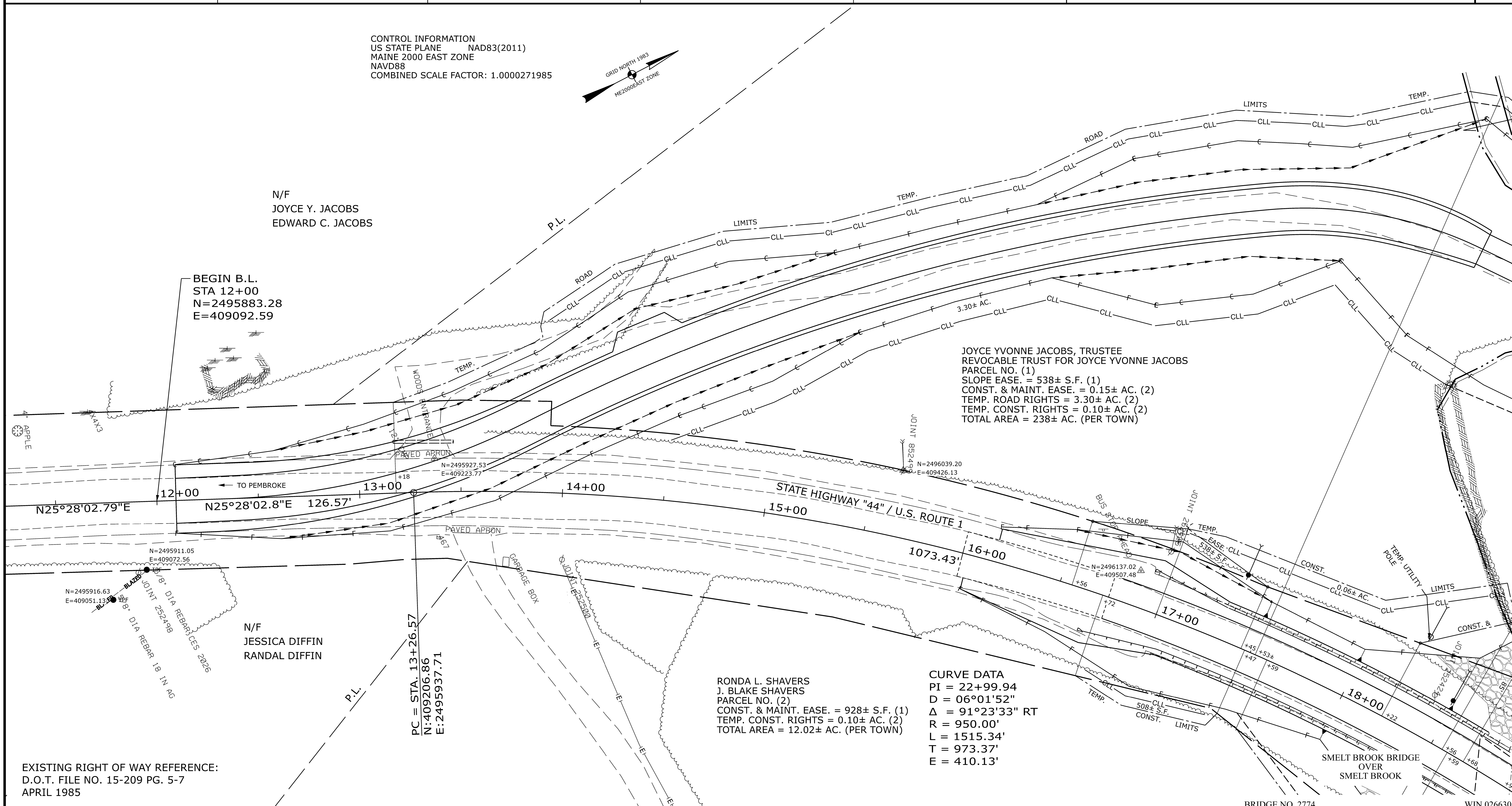

NO.	DATE	REVISIONS DESCRIPTION	BY

PLAN FILED IN PLAN BOOK NO.	GRANTOR	PAGE INSTRUMENT	COUNTY RECORD DATE	BOOK	PAGE

BRUCE A. VAN NOTE
COMMISSIONER
JOYCE NOEL TAYLOR
CHIEF ENGINEER
DATE

CHECKED	JDF	DSG	JDF
TECH	CDP	NSE	NSE
ITEM	EXISTING CONDITION PLAN	FINAL RIGHT OF WAY	AREAS

STATE OF MAINE
DEPARTMENT OF TRANSPORTATION
16 STATE HOUSE STATION - AUGUSTA, ME 04333-0016 - 207-624-3460
PERRY
RIGHT OF WAY MAP

STATE HIGHWAY "44"
U.S. ROUTE 1
PERRY WASHINGTON COUNTY
FEDERAL AID PROJECT NO. 2663000
JUNE 2025 | SCALE 1"= 25' | RIGHT-OF-WAY MAP SHEET 1 OF 3 | D.O.T. FILE NO. 15-354

SHEET NUMBER

Username: carlton.d.peabody Date: 8/12/2025
Filename: C:\Users\carlton.d.peabody\State of Maine\MaineDOT Work - WIN\26630_07\ROW\000_Right-of-Way_Plan.dgn

PLAN LEGEND

Town, County, State	New R/W Along Existing R/W	Existing / Proposed	Existing / Proposed	Cut Line	Fill Line
Approx. Property Lines	Building / Clearing Limit Line (CLL)	Sanitary Sewer — SA	Traveled Way	Stonewall	Retaining Wall
Existing Right of Way	Trees: Conifer / Deciduous	Com. Line UG — COM / UG COMM	Ditch	Baseline 10+00 11+00 12+00	
Limits of Wrought Portion — LIMITS OF WROUGHT PORTION	Tree Line / Bush Line	Electric Line — E / UG POW	Catch Basin	Monument	Traverse Point
Control Of Access	Water Edge	Water Line — W / WL	Manhole	Iron Rod Set (IRS)	Pipe Found (IPF)
New Right of Way	Ledge / Rock/Boulder / Flag Pole	Underdrain Line	Sewer Manhole		
New Easement	Fence: CHAIN LINK / BARB WIRE / STOCKADE	Gas Line — G / GAS	Utlity Pole		
New Temporary Rights — TEMP. CONST. LIMITS	Sign / Well / Mailbox	Guardrail	Fire Hydrant		
New R/W Within Existing R/W		Culvert	Curbing		

THIS PLAN WAS PREPARED IN CONNECTION WITH THE DEPARTMENT'S ACQUISITION OF REAL PROPERTY FOR TRANSPORTATION PURPOSES. IT CANNOT BE USED TO ESTABLISH LEGAL BOUNDARIES BETWEEN ABUTTING PROPERTY OWNERS.

25 0 25 50 75 100
Scale of Feet

STATE OF MAINE
REGISTRY OF DEEDS

COUNTY OF _____
RECEIVED _____, 20____
AT_____ HRS. _____ MINS. _____ .M.
AND RECORDED IN
PLAN BOOK (OR FILE NO.) _____, PAGE _____
ATTEST: _____
REGISTER

EXISTING RIGHT OF WAY REFERENCE:
D.O.T. FILE NO. 15-209 PG. 5-7
APRIL 1985

CONTROL INFORMATION
US STATE PLANE NAD83(2011)
MAINE 2000 EAST ZONE
NAVD88
COMBINED SCALE FACTOR: 1.0000271985

GRID NORTH 1983
NE2000EAST ZONE

CAROL LINCOLN COFFEE
PARCEL NO. (3)
TEMP. ROAD RIGHTS = 0.58± AC. (1)
TOTAL AREA = 5.00± AC. (DEED)

JOYCE YVONNE JACOBS, TRUSTEE
REVOCABLE TRUST FOR JOYCE YVONNE JACOBS
PARCEL NO. (1)
SLOPE EASE. = 538± S.F. (1)
CONST. & MAINT. EASE. = 0.15± AC. (2)
TEMP. ROAD RIGHTS = 3.30± AC. (2)
TEMP. CONST. RIGHTS = 0.10± AC. (2)
TOTAL AREA = 238± AC. (PER TOWN)

JOYCE YVONNE JACOBS, TRUSTEE
REVOCABLE TRUST FOR JOYCE YVONNE JACOBS
PARCEL NO. (1)
SLOPE EASE. = 538± S.F. (1)
CONST. & MAINT. EASE. = 0.15± AC. (2)
TEMP. ROAD RIGHTS = 3.30± AC. (2)
TEMP. CONST. RIGHTS = 0.10± AC. (2)
TOTAL AREA = 238± AC. (PER TOWN)

P.L. AT APPROX. LOW WATER LINE
SMELT BROOK
TIDAL
DIA REBAR PLS 2062 SOUTH MEADOW SURVEYING
N=2496224.84 E=409879.76
N=2496216.05 E=409852.09
N=2496130.31 E=409774.16
N=2496170.45 E=409796.50
N=2496227.92 E=409821.83
N=2496349.75 E=409825.37
N=2496508.66 E=409809.87
N=2496560.16 E=409737.23
N=2496137.02 E=409507.48
N=2496039.20 E=409426.13
3.30± AC.
0.58± AC.
0.15± AC.
0.06± AC.
538± S.F.
508± S.F.
1714± S.F.
1073.43'
16+00
17+00
18+00
19+00
20+00
21-
STATE HIGHWAY "44" / U.S. ROUTE 1
SMELT BROOK BRIDGE OVER SMELT BROOK
BRIDGE NO. 2774
WIN 026630.07
PARCEL NO. (2)
JOINT 252423
JOINT 252426
JOINT 252419
JOINT 852420
BRIDGE NO. 2955
GRANITE BLOCK
5" ASH CLUMP

ITEM	TECH	CHECKED
EXISTING CONDITION PLAN	CDP	JDF
FINAL RIGHT OF WAY	NSE	DSG
AREAS	NSE	JDF

STATE OF MAINE
DEPARTMENT OF TRANSPORTATION
16 STATE HOUSE STATION - AUGUSTA, ME 04333-0016 - 207-624-3460
PERRY
RIGHT OF WAY MAP

REVISIONS			
NO.	DATE	DESCRIPTION	BY

PLAN FILED IN PLAN BOOK	PAGE	COUNTY RECORD			
NO.	GRANTOR	INSTRUMENT	DATE	BOOK	PAGE

BRUCE A. VAN NOTE
COMMISSIONER
JOYCE NOEL TAYLOR
CHIEF ENGINEER

DATE

STATE HIGHWAY "44"
U.S. ROUTE 1
PERRY — WASHINGTON COUNTY
FEDERAL AID PROJECT NO. 2663000

JUNE 2025	RIGHT-OF-WAY MAP	D.O.T. FILE NO. 15-354
SCALE 1"= 25'	SHEET 2 OF 3	

SHEET NUMBER
34
OF 35

Date: 8/12/2025
Username: carlton.d.peabody

Filename: C:\Users\carlton.d.peabody\State of Maine\MaineDOT Work - WIN\26630_07\ROW\000_Right-of-Way_Plan.dgn

PLAN LEGEND

Town, County, State	New R/W Along Existing R/W	Existing / Proposed	Existing / Proposed	Cut Line / Fill Line
Approx. Property Lines	Building / Clearing Limit Line (CLL)	Sanitary Sewer — SA	Traveled Way	Stonewall / Retaining Wall
Existing Right of Way	Trees: Conifer / Deciduous	Com. Line UG — COM / UG COMM	Ditch	Baseline 10+00 11+00 12+00
Limits of Wrought Portion — LIMITS OF WROUGHT PORTION	Tree Line / Bush Line	Electric Line — E / UG POW	Catch Basin	Monument / Traverse Point
Control Of Access	Water Edge	Water Line — W / WL	Manhole	Iron Rod Set (IRS) / Pipe Found (IPF)
New Right of Way	Ledge / Rock/Boulder / Flag Pole	Underdrain Line	Sewer Manhole	
New Easement	Fence: CHAIN LINK / BARB WIRE / STOCKADE	Gas Line — G / GAS	Utility Pole	
New Temporary Rights — TEMP. CONST. LIMITS	Sign / Well / Mailbox	Guardrail	Fire Hydrant	
New R/W Within Existing R/W		Culvert	Curbing	

THIS PLAN WAS PREPARED IN CONNECTION WITH THE DEPARTMENT'S ACQUISITION OF REAL PROPERTY FOR TRANSPORTATION PURPOSES. IT CANNOT BE USED TO ESTABLISH LEGAL BOUNDARIES BETWEEN ABUTTING PROPERTY OWNERS.

25 0 25 50 75 100
Scale of Feet

STATE OF MAINE
REGISTRY OF DEEDS

COUNTY OF _____
RECEIVED _____, 20____
AT ____ HRS. ____ MINS. ____ .M.
AND RECORDED IN
PLAN BOOK (OR FILE NO.) _____, PAGE _____
ATTEST: _____
REGISTER

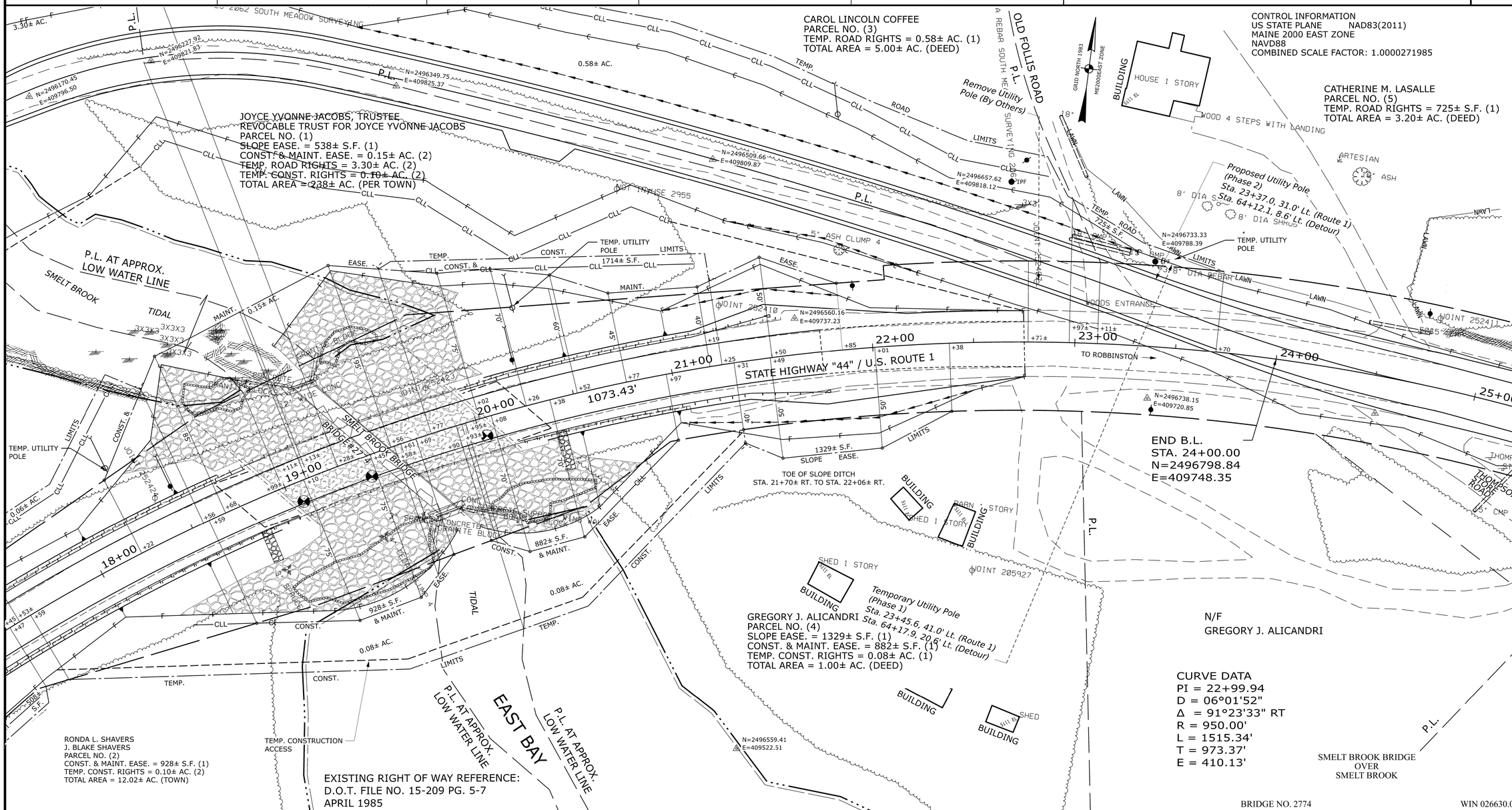

ITEM	TECH	CHECKED
EXISTING CONDITION PLAN	CDP	JDF
FINAL RIGHT OF WAY	NSE	DSG
AREAS	NSE	JDF

STATE OF MAINE
DEPARTMENT OF TRANSPORTATION
16 STATE HOUSE STATION - AUGUSTA, ME 04333-0016 - 207-624-3460
PERRY
RIGHT OF WAY MAP

REVISIONS			
NO.	DATE	DESCRIPTION	BY

PLAN FILED IN PLAN BOOK		PAGE	COUNTY RECORD			
NO.	GRANTOR		INSTRUMENT	DATE	BOOK	PAGE

BRUCE A. VAN NOTE
COMMISSIONER
JOYCE NOEL TAYLOR
CHIEF ENGINEER
DATE

STATE HIGHWAY "44"
U.S. ROUTE 1
PERRY — WASHINGTON COUNTY
FEDERAL AID PROJECT NO. 2663000
JUNE 2025 | RIGHT-OF-WAY MAP | SCALE 1"= 25' | SHEET 3 OF 3 | D.O.T. FILE NO. 15-354

SHEET NUMBER
35
OF 35

Date: 8/12/2025
Username: carlton.d.peabody

Filename: C:\Users\carlton.d.peabody\State of Maine\MaineDOT Work - WIN\26630_07\ROW\000_Right-of-Way_Plan.dgn