STATE OF MAINE
DEPARTMENT OF TRANSPORTATION

SPECIFICATIONS

Design: Load and Resistance Factor Design per AASHTO LRFD Bridge Design Specifications, Ninth Edition, 2020.

DESIGN LOADING

Live Load HL-93

TRAFFIC DATA

	I-95 Northbound	I-95 Southbound	Somerset Avenue	Webb Road
Current (2021) AADT	9550	9540	6290	370
Future (2041) AADT	10510	10490	6920	410
DHV - % of AADT	13%	11%	10%	12%
Design Hour Volume	1366	1154	692	49
Heavy Trucks (% of AADT)	18%	21%	5%	
Heavy Trucks (% of DHV)	11%	13%	3%	
Directional Distribution (% of DHV)	100%	100%	3%	
18 kip Equivalent P 2.0	3060	3702	174	
18 kip Equivalent P 2.5	2915	3531	166	
Design Speed (mph)	70 MPH	70 MPH	30 MPH	45 MPH

MATERIALS

Concrete:
- Curbs ..... Class "LP"
- All Other ..... Class "A"

Reinforcing Steel:
- Plain ..... ASTM A 615/A 615M, Grade 60
- Low-Carbon Chromium ..... ASTM A1035-CS, Grade 100

Structural Steel:
- All Material (except as noted) ..... ASTM A 709, Grade 50, Painted
- High Strength Bolts ..... ASTM F 3125, Grade A 325, Type 1

BASIC DESIGN STRESSES

Concrete
- Class A ..... f'c = 4000 psi
- Class LP ..... f'c = 5000 psi

Reinforcing Steel (Plain) ..... fy = 60,000 psi
Reinforcing steel (Low-Carbon Chromium) ..... fy = 100,000 psi

Structural Steel:
- ASTM A 709, Grade 50, Painted ..... Fy = 50,000 psi
- ASTM F 3125, Grade A 325, Type 1 ..... Fμ = 120,000 psi

UTILITIES

Central Maine Power Company
Charter Communication, Inc.
Consolidated Communications of Northern New England Company LLC

MAINTENANCE OF TRAFFIC

Interstate 95 - Two Phase Construction maintaining one lane of interstate traffic on bridge.
Somerset Avenue - Two Phase Construction utilizing alternating one-way traffic with temporary signals.
Webb Road - Constructed utilizing alternating one-way traffic using flaggers.

PITTSFIELD
SOMERSET COUNTY
INTERSTATE 95

I-95 SB / SOMERSET AVENUE #1447
FEDERAL AID PROJECT NO. 2563106 - PROJECT LENGTH 0.071 mi.

I-95 NB / SOMERSET AVENUE #5985
FEDERAL AID PROJECT NO. 2563106 - PROJECT LENGTH 0.067 mi.

I-95 SB / WEBB ROAD #1449
FEDERAL AID PROJECT NO. 2563106 - PROJECT LENGTH 0.071 mi.

I-95 NB / WEBB ROAD #5984
FEDERAL AID PROJECT NO. 2563106 - PROJECT LENGTH 0.062 mi.

I-95 SB / SOMERSET AVENUE #1447
FEDERAL AID PROJECT NO. 2875400 - PROJECT LENGTH 0.085 mi.

I-95 SB / WEBB ROAD #1449
FEDERAL AID PROJECT NO. 2875600 PROJECT LENGTH 0.085mi.

LIST OF DRAWINGS

PROJECT LOCATION	I-95 SB over Somerset Ave (#1447) - Lat./Long. 44° 47' 05.29" N 69° 24' 15.67" W I-95 SB over Webb Road (#1449) - Lat./Long. 44°46'10.32" N 69° 24' 40.27" W I-95 NB over Somerset Ave (#5985) - Lat./Long. 44° 47' 05.68" N 69° 24' 12.44" W I-95 NB over Webb Road (#5984) - Lat./Long. 44° 46' 11.01" N 69° 24' 35.86" W
OUTLINE OF WORK	Bridge Deck Replacements, Profile Adjustment on Somerset Ave and Webb Road

WIN 25631.06, 25631.07, 25631.08, 25631.09, 28754.00 & 28756.00

2563106, 2875400, & 2875600

STATE OF MAINE
DEPARTMENT OF TRANSPORTATION
APPROVED — DATE
COMMISSIONER: 6-25-24
CHIEF ENGINEER: 6-20-2024

STATE OF MAINE — THERESA D. McAULIFFE — No. 13046 — PROFESSIONAL ENGINEER

PROJECT INFORMATION		
PROGRAM	Bridge Program	
PROJECT MANAGER	Julie Brook	SIGNATURE 13046
DESIGNER		P.E. NUMBER
CONSULTANT	MCFARLAND JOHNSON, INC.	6/10/2024
PROJECT RESIDENT		
CONTRACTOR		DATE
PROJECT COMPLETION DATE		

PITTSFIELD
INTERSTATE 95 SB & NB OVER
SOMERSET AVENUE AND WEBB ROAD

TITLE SHEET

SHEET NUMBER
1
OF 110

Filename: ...\Sheet Files\001_Title.dgn Division: Username: jfitzpatrick Date:6/10/2024

ESTIMATED QUANTITIES

ITEM NO.	ITEM DESCRIPTION		BR # 1447 WIN 25631.06	BR # 5985 WIN 25631.07	BR # 1449 WIN 25631.08	BR # 5984 WIN 25631.09	BR # 1447 WIN 28754.00	BR # 1449 WIN 28756.00	TOTAL QUANTITY	UNIT
202.10	REMOVE EXISTING SUPERSTRUCTURE PROPERTY OF CONTRACTOR-BRIDGE #1447	(170 CY)	1	0	0	0	0	0	1	LS
202.10	REMOVE EXISTING SUPERSTRUCTURE PROPERTY OF CONTRACTOR-BRIDGE #5985	(170 CY)	0	1	0	0	0	0	1	LS
202.10	REMOVE EXISTING SUPERSTRUCTURE PROPERTY OF CONTRACTOR-BRIDGE #1449	(165 CY)	0	0	1	0	0	0	1	LS
202.10	REMOVE EXISTING SUPERSTRUCTURE PROPERTY OF CONTRACTOR-BRIDGE #5984	(165 CY)	0	0	0	1	0	0	1	LS
202.12	REMOVE EXISTING STRUCTURAL CONCRETE		45	45	50	50	0	0	190	CY
202.13	REMOVE EXISTING RAILINGS (RETAINED BY DEPARTMENT)		330	330	345	345	0	0	1350	LF
202.202	REMOVING PAVEMENT SURFACE		2737.5	2527.5	2737.5	2487.5	0	0	10490	SY
202.205	RUMBLE STRIP - SHOULDER		3965	3895	3965	3885	0	0	15710	LF
203.20	COMMON EXCAVATION		232.5	232.5	176.5	222.5	2200	580	3644	CY
203.24	COMMON BORROW		0	0	0	0	4	0	4	CY
203.25	GRANULAR BORROW		45	25	25	55	0	0	150	CY
206.082	STRUCTURAL EARTH EXCAVATION - MAJOR STRUCTURES, PLAN QUANTITY		55	35	40	80	0	0	210	CY
304.10	AGGREGATE SUBBASE COURSE - GRAVEL		127.5	128.5	73.5	108.5	1950	290	2678	CY
403.2081	HOT MIX ASPHALT - 12.5 MM (POLYMER MODIFIED)		302.5	282.5	302.5	282.5	190	91	1451	T
403.211	HOT MIX ASPHALT (SHIM)		6	6	6	6	0	0	24	T
403.2131	HOT MIX ASPHALT - 12.5 MM (BASE AND INTERMEDIATE BASE COURSE, POLYMER MODIFIED)		367.5	357.5	357.5	347.5	310	160	1900	T
409.15	BITUMINOUS TACK COAT, APPLIED		257.5	247.5	247.5	237.5	180	88	1258	G
461.131	TEMPORARY PAVEMENT		0	0	0	0	12	0	12	T
502.21	STRUCTURAL CONCRETE, ABUTMENTS AND RETAINING WALLS		26	22	18	20	0	0	86	CY
502.26	STRUCTURAL CONCRETE ROADWAY AND SIDEWALK SLAB ON STEEL BRIDGES-BRIDGE #1447	(170 CY)	1	0	0	0	0	0	1	LS
502.26	STRUCTURAL CONCRETE ROADWAY AND SIDEWALK SLAB ON STEEL BRIDGES-BRIDGE #5985	(170 CY)	0	1	0	0	0	0	1	LS
502.26	STRUCTURAL CONCRETE ROADWAY AND SIDEWALK SLAB ON STEEL BRIDGES-BRIDGE #1449	(160 CY)	0	0	1	0	0	0	1	LS
502.26	STRUCTURAL CONCRETE ROADWAY AND SIDEWALK SLAB ON STEEL BRIDGES-BRIDGE #5984	(160 CY)	0	0	0	1	0	0	1	LS
502.31	STRUCTURAL CONCRETE APPROACH SLAB-BRIDGE #1447	(15 CY)	1	0	0	0	0	0	1	LS
502.31	STRUCTURAL CONCRETE APPROACH SLAB-BRIDGE #5985	(9 CY)	0	1	0	0	0	0	1	LS
502.31	STRUCTURAL CONCRETE APPROACH SLAB-BRIDGE #1449	(9 CY)	0	0	1	0	0	0	1	LS
502.31	STRUCTURAL CONCRETE APPROACH SLAB-BRIDGE #5984	(20 CY)	0	0	0	1	0	0	1	LS
502.49	STRUCTURAL CONCRETE CURBS AND SIDEWALKS-BRIDGE #1447	(22 CY)	1	0	0	0	0	0	1	LS
502.49	STRUCTURAL CONCRETE CURBS AND SIDEWALKS-BRIDGE #5985	(22 CY)	0	1	0	0	0	0	1	LS
502.49	STRUCTURAL CONCRETE CURBS AND SIDEWALKS-BRIDGE #1449	(23 CY)	0	0	1	0	0	0	1	LS
502.49	STRUCTURAL CONCRETE CURBS AND SIDEWALKS-BRIDGE #5984	(23 CY)	0	0	0	1	0	0	1	LS
503.12	REINFORCING STEEL, FABRICATED AND DELIVERED		69000	67600	57300	59600	0	0	253500	LB
503.13	REINFORCING STEEL, PLACING		69000	67600	57300	59600	0	0	253500	LB
503.19	LOW-CARBON CHROMIUM REINFORCEMENT, FABRICATED AND DELIVERED		5400	5300	5700	5700	0	0	22100	LB
503.20	LOW-CARBON CHROMIUM REINFORCEMENT, PLACING		5400	5300	5700	5700	0	0	22100	LB
504.701	STRUCTURAL STEEL FABRICATED AND DELIVERED, ROLLED-BRIDGE #1447	(19500 LB)	0	0	0	0	1	0	1	LS
504.71	STRUCTURAL STEEL ERECTION-BRIDGE #1447	(19500 LB)	0	0	0	0	1	0	1	LS
505.08	SHEAR CONNECTORS-BRIDGE #1447	(4698 EA)	1	0	0	0	0	0	1	LS
505.08	SHEAR CONNECTORS-BRIDGE #5985	(4698 EA)	0	1	0	0	0	0	1	LS
505.08	SHEAR CONNECTORS-BRIDGE #1449	(3978 EA)	0	0	1	0	0	0	1	LS
505.08	SHEAR CONNECTORS-BRIDGE #5984	(3978 EA)	0	0	0	1	0	0	1	LS
506.1775	FIELD PAINTING, NEW AND EXISTING STEEL WITH ZINC RICH PAINT-BRIDGE #1447	(12 SF)	0	0	0	0	1	0	1	LS
506.9102	ZINC RICH COATING SYSTEM (SHOP APPLIED)-BRIDGE #1447	(19500 LB)	0	0	0	0	1	0	1	LS
507.0821	STEEL BRIDGE RAILING, 3 BAR-BRIDGE #1447	(350 LF)	1	0	0	0	0	0	1	LS
507.0821	STEEL BRIDGE RAILING, 3 BAR-BRIDGE #5985	(350 LF)	0	1	0	0	0	0	1	LS
507.0821	STEEL BRIDGE RAILING, 3 BAR-BRIDGE #1449	(370 LF)	0	0	1	0	0	0	1	LS
507.0821	STEEL BRIDGE RAILING, 3 BAR-BRIDGE #5984	(370 LF)	0	0	0	1	0	0	1	LS
507.0822	STEEL APPROACH RAILING: 3-BAR		4	4	4	4	0	0	16	EA
508.14	HIGH PERFORMANCE WATERPROOFING MEMBRANE-BRIDGE #1447	(650 SY)	1	0	0	0	0	0	1	LS
508.14	HIGH PERFORMANCE WATERPROOFING MEMBRANE-BRIDGE #5985	(650 SY)	0	1	0	0	0	0	1	LS
508.14	HIGH PERFORMANCE WATERPROOFING MEMBRANE-BRIDGE #1449	(610 SY)	0	0	1	0	0	0	1	LS
508.14	HIGH PERFORMANCE WATERPROOFING MEMBRANE-BRIDGE #5984	(610 SY)	0	0	0	1	0	0	1	LS
515.21	PROTECTIVE COATING FOR CONCRETE SURFACES-BRIDGE #1447	(620 SY)	1	0	0	0	0	0	1	LS
515.21	PROTECTIVE COATING FOR CONCRETE SURFACES-BRIDGE #5985	(610 SY)	0	1	0	0	0	0	1	LS
515.21	PROTECTIVE COATING FOR CONCRETE SURFACES-BRIDGE #1449	(750 SY)	0	0	1	0	0	0	1	LS
515.21	PROTECTIVE COATING FOR CONCRETE SURFACES-BRIDGE #5984	(720 SY)	0	0	0	1	0	0	1	LS
518.60	REPAIR OF VERTICAL SURFACES < 8 INCHES		40	10	50	65	0	0	165	SF
518.61	REPAIR OF VERTICAL SURFACES ≥ 8 INCHES		0	0	2	0	0	0	2	CY
519.60	EXPANSION DEVICE - ASPHALTIC PLUG JOINT		0	0	49	49	0	0	98	LF
520.21	EXPANSION DEVICE - GLAND SEAL		1	1	1	1	0	0	4	EA
520.233	EXPANSION DEVICE - SILICONE COATED PRECOMPRESSED FOAM		0	0	11	11	0	0	22	LF
523.52	BEARING INSTALLATION		5	0	13	13	0	0	31	EA
523.5302	STEEL BEARINGS, EXPANSION, SLIDING PLATE		0	0	1	1	0	0	2	EA
523.5303	STEEL BEARINGS, FIXED, ROCKER		1	0	0	0	0	0	1	EA
523.5304	STEEL BEARINGS, EXPANSION, ROCKER		4	0	0	0	0	0	4	EA

STATE OF MAINE
DEPARTMENT OF TRANSPORTATION

PROJECT NO. 2563106, 2875400, & 2875600

WIN 25631.06, 25631.07, 25631.08, 25631.09, 28754.00, & 28756.00

BRIDGE NO. 1447, 5985, 1449, 5984 BRIDGE PLANS

		BY	DATE
PROJ. MANAGER	J. BRASK		
DESIGN-DETAILED	S. LINDSLEY	E. MORRISON	06-24
CHECKED-REVIEWED	D. WHITE	B. COLBURN	06-24
DESIGN2-DETAILED2	N. EDMAN	J. FITZ	06-24
DESIGN3-DETAILED3			
REVISIONS 1			
REVISIONS 2			
REVISIONS 3			
REVISIONS 4			
FIELD CHANGES			

SIGNATURE

P.E. NUMBER

DATE

I-95 SB & NB OVER WEBB RD & SOMERSET AVE
SOMERSET AVE & WEBB ROAD LOWERING
PITTSFIELD SOMERSET COUNTY

ESTIMATED QUANTITIES

SHEET NUMBER

2

OF 110

ESTIMATED QUANTITIES

ITEM NO.	ITEM DESCRIPTION	BR # 1447 WIN 25631.06	BR # 5985 WIN 25631.07	BR # 1449 WIN 25631.08	BR # 5984 WIN 25631.09	BR # 1447 WIN 28754.00	BR # 1449 WIN 28756.00	TOTAL QUANTITY	UNIT
523.5402	LAMINATED ELASTOMERIC BEARINGS EXPANSION	0	0	12	12	0	0	24	EA
524.301	TEMPORARY STRUCTURAL SUPPORT (BEARING REPLACEMENT)-BRIDGE #1447	1	0	0	0	0	0	1	LS
524.301	TEMPORARY STRUCTURAL SUPPORT (BEARING REPLACEMENT)-BRIDGE #1449	0	0	1	0	0	0	1	LS
524.301	TEMPORARY STRUCTURAL SUPPORT (BEARING REPLACEMENT)-BRIDGE #5984	0	0	0	1	0	0	1	LS
524.301	TEMPORARY STRUCTURAL SUPPORT APPROACHES-BRIDGE #1447	1	0	0	0	0	0	1	LS
524.301	TEMPORARY STRUCTURAL SUPPORT APPROACHES-BRIDGE #5985	0	1	0	0	0	0	1	LS
524.301	TEMPORARY STRUCTURAL SUPPORT APPROACHES-BRIDGE #1449	0	0	1	0	0	0	1	LS
524.301	TEMPORARY STRUCTURAL SUPPORT APPROACHES-BRIDGE #5984	0	0	0	1	0	0	1	LS
524.40	PROTECTIVE SHIELD-BRIDGE #1447	1	0	0	0	0	0	1	LS
524.40	PROTECTIVE SHIELD-BRIDGE #5985	0	1	0	0	0	0	1	LS
524.40	PROTECTIVE SHIELD-BRIDGE #1449	0	0	1	0	0	0	1	LS
524.40	PROTECTIVE SHIELD-BRIDGE #5984	0	0	0	1	0	0	1	LS
526.301	PORTABLE CONCRETE BARRIER, TYPE I (3150 LF)	0.2	0.2	0.2	0.2	0.2	0	1	LS
526.304	TEMPORARY CONCRETE BARRIER, ANCHORED TYPE 1 (770 LF)	0.25	0.25	0.25	0.25	0	0	1	LS
526.305	TEMPORARY CONCRETE BARRIER, BRACED TYPE 1 (770 LF)	0.25	0.25	0.25	0.25	0	0	1	LS
527.33	TRUCK MOUNTED ATTENUATOR	1	1	1	1	0	0	4	EA
527.34	WORK ZONE CRASH CUSHION	1	1	1	1	2	0	6	UN
604.18	ADJUST MANHOLE OR CATCH BASIN TO GRADE	0	0	0	0	2	0	2	EA
606.1301	31" W-BEAM GR - MID WAY SPLICE -SINGLE FACED	487.5	300	400	250	525	437.5	2400	LF
606.1305	31" W-BEAM GR - MID-WAY SPLICE FLARED TERMINAL	1	1	0	0	4	2	8	EA
606.1721	BRIDGE TRANSITION -TYPE 1	4	4	4	4	0	0	16	EA
606.265	TERMINAL END TRAILING END- GALVANIZED	1	2	1	1	0	0	5	EA
606.353	REFLECTORIZED FLEXIBLE GUARDRAIL MARKER	10	12	9	9	16	4	60	EA
606.363	GR REMOVE AND DISPOSE	590	420	510	330	1050	480	3380	LF
606.63	THRIE BEAM RAIL BEAM	0	0	0	0	480	0	480	LF
606.70	TRANSITION SECTION THRIE BEAM	0	0	0	0	8	0	8	EA
607.183	CHAIN LINK SNOW FENCE 33 INCH-BRIDGE #1447 (130 LF)	1	0	0	0	0	0	1	LS
607.183	CHAIN LINK SNOW FENCE 33 INCH-BRIDGE #5985 (130 LF)	0	1	0	0	0	0	1	LS
607.183	CHAIN LINK SNOW FENCE 33 INCH-BRIDGE #1449 (130 LF)	0	0	1	0	0	0	1	LS
607.183	CHAIN LINK SNOW FENCE 33 INCH-BRIDGE #5984 (130 LF)	0	0	0	1	0	0	1	LS
609.11	VERT CURB TYPE 1	0	0	0	0	900	0	900	LF
609.26	CURB TRANSITION SECTION B TYPE 1	0	0	0	0	1	0	1	EA
609.40	RESET CURB TYPE 5	0	0	0	0	50	0	50	LF
610.08	PLAIN RIPRAP	14	14	14	14	0	0	56	CY
615.07	LOAM	0	0	0	0	46	46	92	CY
618.14	SEEDING METHOD NUMBER 2	0	0	0	0	8	8	16	UN
619.12	MULCH	0	0	0	0	8	8	16	UN
620.58	EROSION CONTROL GEOTEXTILE	64	64	64	64	0	0	256	SY
627.30	GROOVING FOR PAVEMENT MARKING	6100	6100	6100	6100	0	0	24400	SF
627.733	4" WHITE OR YELLOW PAINTED PAVEMENT MARKING LINE	0	0	0	0	4750	0	4750	LF
627.744	6" WHITE OR YELLOW PAINTED PAVEMENT MARKING LINE	6100	6100	6100	6100	0	0	24400	LF
627.77	REMOVE PAVEMENT MARKINGS	6100	6100	6100	6100	1400	0	25800	SF
627.78	TEMPORARY 4" PAINTED PAVEMENT MARKING LINE, WHITE OR YELLOW	0	0	0	0	400	0	400	LF
627.781	TEMPORARY 6" PAINTED PAVEMENT MARKING LINE, WHITE OR YELLOW	8300	8300	8300	8300	0	0	33200	LF
629.05	HAND LABOR, STRAIGHT TIME	25	25	25	25	0	0	100	HR
631.10	AIR COMPRESSOR (INCLUDING OPERATOR)	5	5	5	5	0	0	20	HR
631.11	AIR TOOL (INCLUDING OPERATOR)	5	5	5	5	0	0	20	HR
631.12	ALL-PURPOSE EXCAVATOR (INCLUDING OPERATOR)	25	25	25	25	25	0	125	HR
631.172	TRUCK-LARGE (INCLUDING OPERATOR)	25	25	25	25	25	0	125	HR
631.22	FRONT END LOADER (INCLUDING OPERATOR)	25	25	25	25	25	0	125	HR
639.18	FIELD OFFICE TYPE A	0.25	0.25	0.25	0.25	0	0	1	EA
643.72	TEMPORARY TRAFFIC SIGNAL	0	0	0	0	1	0	1	LS
652.30	FLASHING ARROW BOARD	0.5	0.5	0.5	0.5	0	0	2	EA
652.312	TYPE III BARRICADE	4	4	4	4	4	0	20	EA
652.33	DRUM	100	100	100	100	25	0	425	EA
652.34	CONE	0	0	0	0	25	0	25	EA
652.35	CONSTRUCTION SIGNS	120	120	120	120	90	70	640	SF
652.361	MAINTENANCE OF TRAFFIC CONTROL DEVICES	0.2	0.2	0.2	0.2	0.2	0	1	LS
652.38	FLAGGERS	0	0	0	0	320	320	640	HR
652.41	PORTABLE-CHANGEABLE MESSAGE SIGN	0.5	0.5	0.5	0.5	0	0	2	EA
652.45	AUTOMATED TRAILER MOUNTED SPEED LIMIT SIGN	0.5	0.5	0.5	0.5	0	0	2	EA
656.75	TEMPORARY SOIL EROSION AND WATER POLLUTION CONTROL	0.2	0.2	0.2	0.2	0.1	0.1	1	LS
659.10	MOBILIZATION	0.22	0.22	0.22	0.22	0.1	0.02	1	LS
910.301	SPECIAL WORK- DUCT BANK	0	0	0	0	1	0	1	LS
910.301	SPECIAL WORK- WEBB RD PROFILE LOWERING	0	0	0	0	0	1	1	LS

STATE OF MAINE
DEPARTMENT OF TRANSPORTATION

PROJECT NO. 2563106, 2875400, & 2875600

WIN 25631.06, 25631.07, 25631.08, 25631.09, 28754.00 & 28756.00

BRIDGE NO. 1447, 5985, 1449, 5984 BRIDGE PLANS

		BY	DATE
PROJ. MANAGER	J. BRASK		
DESIGN-DETAILED	S. LINDSLEY	E. MORRISON	06-24
CHECKED-REVIEWED	D. WHITE	B. COLBURN	06-24
DESIGN2-DETAILED2	N. EDMAN	J. FITZ	06-24
DESIGN3-DETAILED3			
REVISIONS 1			
REVISIONS 2			
REVISIONS 3			
REVISIONS 4			
FIELD CHANGES			

SIGNATURE

P.E. NUMBER

DATE

I-95 SB & NB OVER WEBB RD & SOMERSET AVE
SOMERSET AVE & WEBB ROAD LOWERING
PITTSFIELD SOMERSET COUNTY

ESTIMATED QUANTITIES

SHEET NUMBER
3
OF 110

Filename: ...\0xx_Pittsfield_Quantities_2.dgn Division: Username: jfitzpatrick Date:6/18/2024

GENERAL CONSTRUCTION NOTES

1. Approximate Right-Of-Way lines were developed from record plans and are shown on the plans. All work shall remain within the existing Right-Of-Way.

2. All clearing shall be considered incidental to the Contract and no separate payment will be made. The actual lines for clearing shall be established in the field by the Contractor as indicated on the Plans and approved by the Resident.

3. Approximate existing drainage and utility information locations were developed from record plans and are shown on the plans.

4. All utility facilities shall be adjusted by the respective utilities unless otherwise noted.

5. Existing signs within the Project limits shall be removed and reset as directed by the Resident. Payment for removal and reinstallation of existing signs will be considered incidental to the Contract. No separate payment will be made.

6. Do not excavate for Aggregate Subbase Course where existing material is suitable as determined by the Resident.

7. In areas where the Resident directs the Contractor not to excavate to the subgrade line shown on the plans, payment for removing existing pavement, grubbing, shaping, ditching, and compacting the existing subbase and layers of new subbase 6 inches or less thick will be made under appropriate equipment rental items.

8. Place loam 2 inches deep on all new or reconstructed sideslopes or as directed by Resident.

9. Erosion Control Mix may be substituted in those areas normally receiving loam and seed as directed by the Resident. Placement shall be in accordance with Standard Specifications Section 619, Mulch. Payment will be made under Pay Item 619.14, Erosion Control Mix.

10. A MASH compliant guardrail end treatment shall be installed concurrently with the placement of each leading end section of beam guardrail.

11. Where it is apparent that runoff will cause continual erosion, Erosion Control Blanket, seeded gutters, or riprap downspouts shall be constructed after paving and shoulder work is completed. Payment will be made under the appropriate Contract items.

12. Protective Coating for Concrete Surfaces shall be applied to the following areas:

    All exposed surfaces of concrete curbs,
    Fascias down to the drip notch,
    Top of abutment backwalls and wingwalls,
    All exposed surfaces of Pier caps and columns, and
    To one foot below the ground on vertical walls against earth.

13. Project information referred to below may be accessed at the following MaineDOT web address: http://www.maine.gov/mdot/contractors/

14. The existing bridge plans may be accessed at the MaineDOT web address. The plans are reproductions of the original drawings as prepared for the construction of the bridge. It is very unlikely that the plans will show any construction field changes or any alterations which may have been made to the bridge during its life span.

15. Quantities included for pay items measured and paid for by Lump Sum are estimated quantities and are provided by MaineDOT for informational purposes only. Lump Sum pay items will be paid for at the Contract Bid amount, with no addition or reduction in payment to the Contractor if the actual final quantities are different from the MaineDOT provided estimated quantities, except as follows:

    a. If a Lump Sum pay item is eliminated, the requirements of Standard Specification Section 109.2, Elimination of Items, will take precedence.

    b. If other Contract Documents specifically allow a change in payment for a Lump Sum pay item, those requirements will be followed.

    c. If a design change results in changes to estimated quantities for Lump Sum pay items, price adjustments will be made in accordance with Standard Specifications Section 109.7, Equitable Adjustments to Compensation and Time.

16. All costs for cofferdams, including pumping, maintenance, related temporary soil erosion and water pollution controls, and removal, will not be paid for directly, but will be considered incidental to related Contract items.

17. The Contractor shall submit Bridge Demolition Plans for each bridge to the Resident at least 10 business days prior to the start of demolition work. The plan shall outline the methods and equipment to be used to remove and dispose of all materials included in the existing bridge decks, portions of abutments and wingwalls, and identified beams, diaphragms, and bearings. No work related to the removal of the bridge decks shall be undertaken by the Contractor until MaineDOT has reviewed the Bridge Demolition Plans for appropriateness and completeness. Payment for all work necessary for developing, submitting and finalizing the Bridge Demolition Plans will be considered incidental to the appropriate bridge removal pay items.

18. The existing bridge components to be removed shall be removed by and become the property of the Contractor. The steel portions of the existing bridges may be coated with a lead-based paint system. The Contractor is responsible for the containment, proper management and disposal of hazardous waste generated by the process of demolishing the existing decks, modifications of structural steel, and installation of shear studs. The Contractor is responsible for implementing appropriate OSHA mandated personal protection standards related to these processes. Once the existing bridge components are removed, the Contractor is solely responsible for the care, custody, and control of the components of the existing bridges and any hazardous water generated as a result of the storage, recycling, or disposal of the bridge components, including lead-coated steel. The Contractor shall recycle or reuse the steel in accordance with the Maine Department of Environmental Protection's "Maine Hazardous Waste Management Regulations," Chapter 850. A copy of this regulation is available at MaineDOT's offices on Child Street in Augusta. Payment for all labor, materials, equipment, and other costs required to remove and dispose of the existing bridges will be considered incidental to the bridge removal pay items.

19. Inlets and outlets of all culverts shall be riprapped unless otherwise noted on the Plans or directed by the Resident.

20. Where a joint between new pavement and existing pavement is called for on the plans, the existing pavement shall be sawcut along a smooth line to a neat, even, vertical joint as directed by the Resident. Broken or raveled edges will not be permitted. All work necessary for the preparation of this joint will be considered incidental to the related contract items.

21. All existing delineators and mile marker posts on Interstate 95 which are impacted shall be removed and reset. Payment for removing and resetting delineators and mile marker posts shall be incidental to the Contract.

22. Relocating existing ground mounted signs during traffic control phasing will not be measured but shall be considered incidental to the various contract items. Signs temporarily relocated within 30' of an active travel way shall have breakaway devices or be protected with portable concrete barrier. Temporary sign supports shall meet the requirements of Specification Section 652.

23. Payment for connections of proposed guardrail to existing guardrail will be considered incidental to related Contract items.

24. Temporary pavement, if needed, over the utility trench on Somerset Avenue shall be considered incidental to maintenance of traffic items.

STATE OF MAINE
DEPARTMENT OF TRANSPORTATION
PROJECT NO. 2563106, 2875400, & 2875600
WIN 25631.06, 25631.07, 25631.08, 25631.09, 28754.00, & 28756.00
BRIDGE NO. 1447, 5985, 1449, 5984
BRIDGE PLANS

PROJ. MANAGER	J. BRASK	BY	DATE
DESIGN-DETAILED	S. LINDSLEY	E. MORRISON	06-24
CHECKED-REVIEWED	D. WHITE	B. COLBURN	06-24
DESIGN2-DETAILED2	N. EDMAN	J. FITZ	06-24
DESIGN3-DETAILED3			
REVISIONS 1			
REVISIONS 2			
REVISIONS 3			
REVISIONS 4			
FIELD CHANGES			

SIGNATURE
P.E. NUMBER
DATE

I-95 SB & NB OVER WEBB RD & SOMERSET AVE
SOMERSET AVE & WEBB ROAD LOWERING
PITTSFIELD SOMERSET COUNTY

GENERAL NOTES

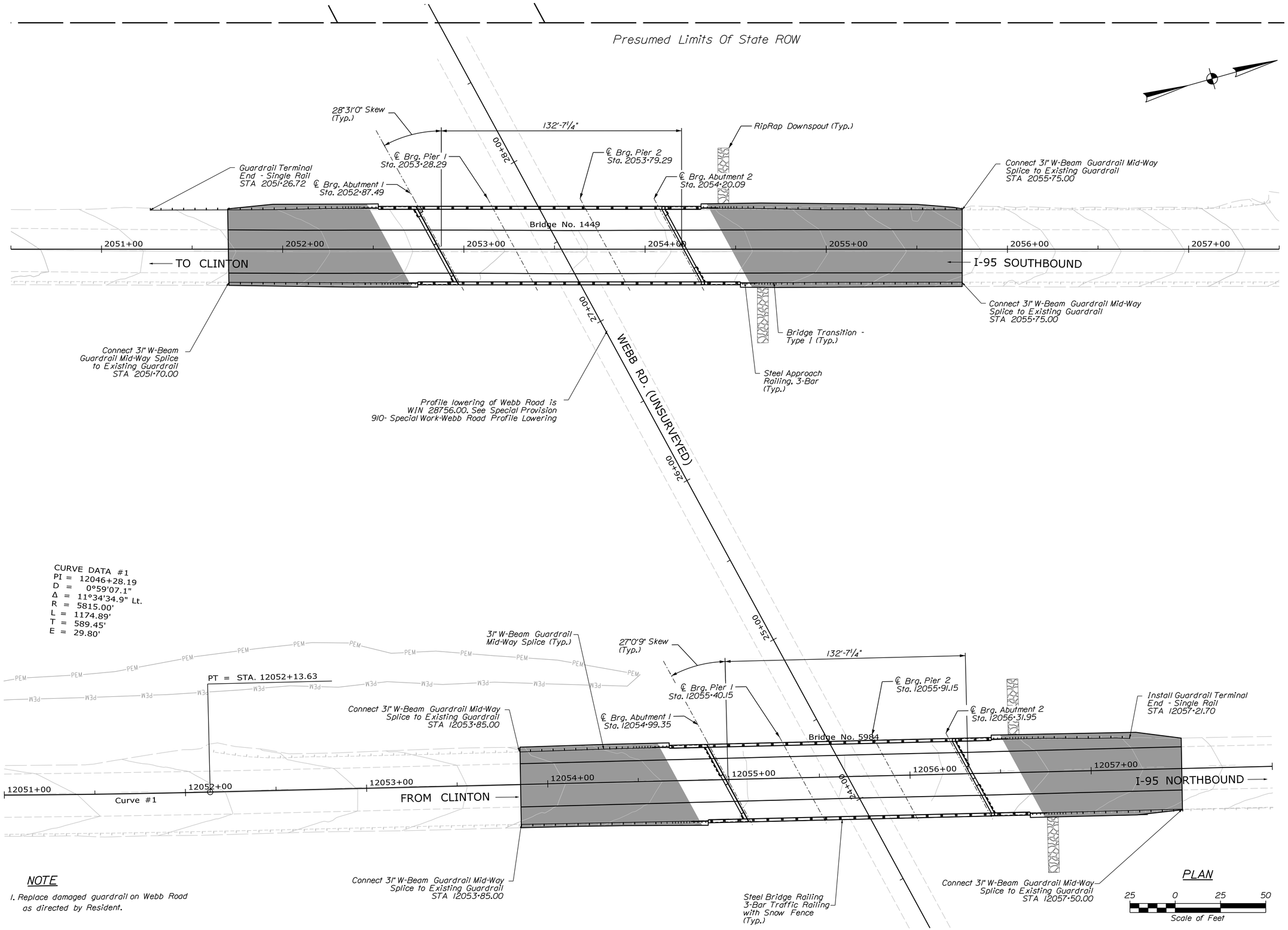

NOTE

1. Replace damaged guardrail on Webb Road as directed by Resident.

STATE OF MAINE
DEPARTMENT OF TRANSPORTATION

PROJECT NO. 2563106 & 2875600

WIN 25631.08, 25631.09, & 28756.00
BRIDGE NO. 1449 & 5984

BRIDGE PLANS

PROJ. MANAGER	J. BRASK	BY	DATE
DESIGN-DETAILED	S. LINDSLEY	E. MORRISON	06-24
CHECKED-REVIEWED	D. WHITE	B. COLBURN	06-24
DESIGN2-DETAILED2	N. EDMAN	J. FITZ	06-24
DESIGN3-DETAILED3			
REVISIONS 1			
REVISIONS 2			
REVISIONS 3			
REVISIONS 4			
FIELD CHANGES			

SIGNATURE

P.E. NUMBER

DATE

I-95 SB & NB OVER WEBB RD
BRIDGE NOS. 1449 & 5984
WEBB ROAD LOWERING
PITTSFIELD SOMERSET COUNTY

GENERAL PLANS

SHEET NUMBER

5

OF 110

Filename: ...\003_GenPlan_5984-1449.dgn Division: Username: jfitzpatrick Date:6/10/2024

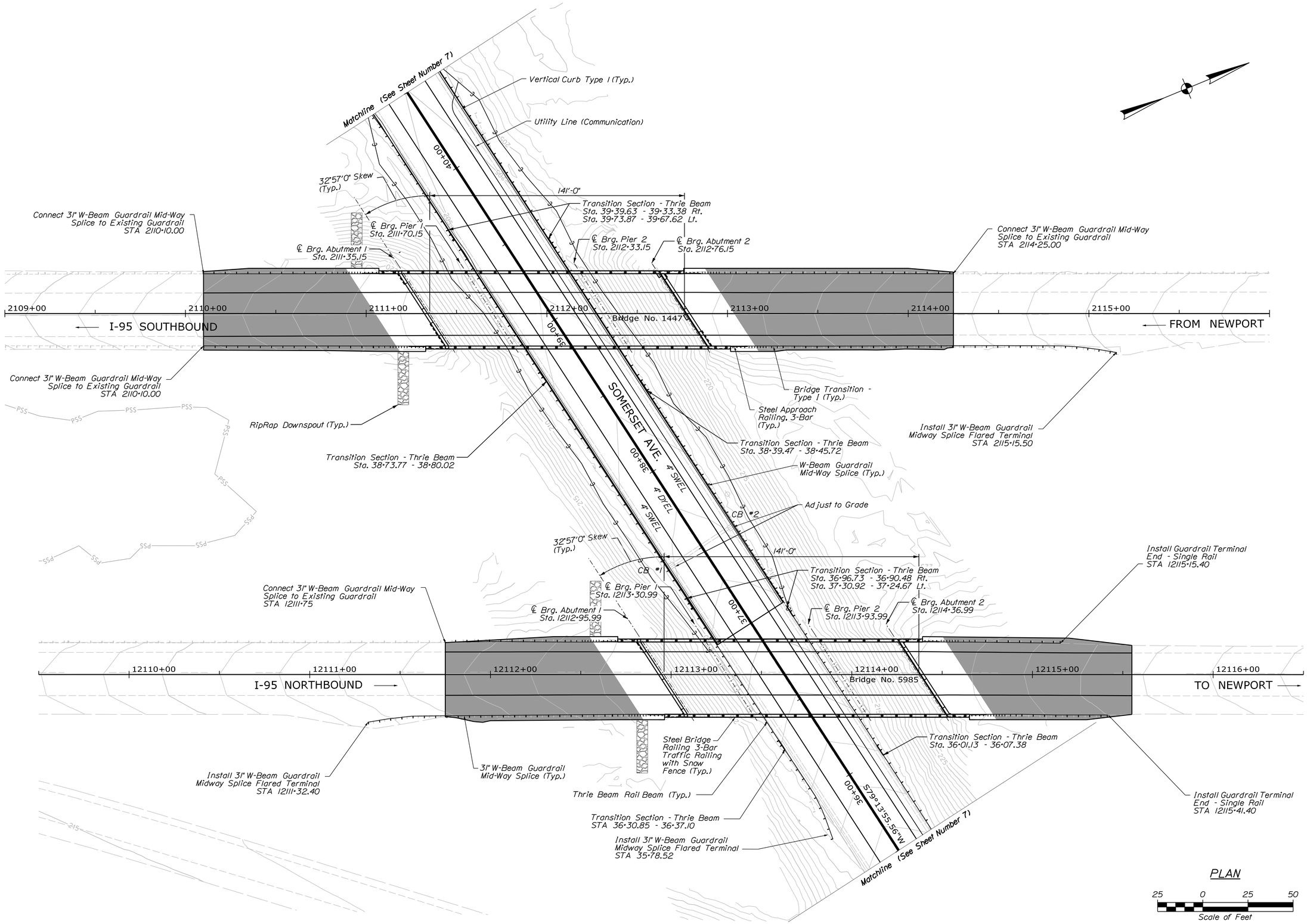

STATE OF MAINE
DEPARTMENT OF TRANSPORTATION

PROJECT NO. 2563106 & 2875400

WIN 25631.06, 25631.07, & 28754.00
BRIDGE NO. 1447 & 5985

BRIDGE PLANS

PROJ. MANAGER	J. BRASK	BY	DATE
DESIGN-DETAILED	S. LINDSLEY	E. MORRISON	06-24
CHECKED-REVIEWED	D. WHITE	B. COLBURN	06-24
DESIGN2-DETAILED2	N. EDMAN	J. FITZ	06-24
DESIGN3-DETAILED3			
REVISIONS 1			
REVISIONS 2			
REVISIONS 3			
REVISIONS 4			
FIELD CHANGES			

SIGNATURE

P.E. NUMBER

DATE

I-95 SB & NB OVER SOMERSET AVE
BRIDGE NOS. 1447 & 5985
SOMERSET AVENUE LOWERING
PITTSFIELD SOMERSET COUNTY

GENERAL PLANS

SHEET NUMBER
6
OF 110

Filename: ...\002_GenPlan_5985-1447.dgn Division: Username: jfitzpatrick Date:6/10/2024

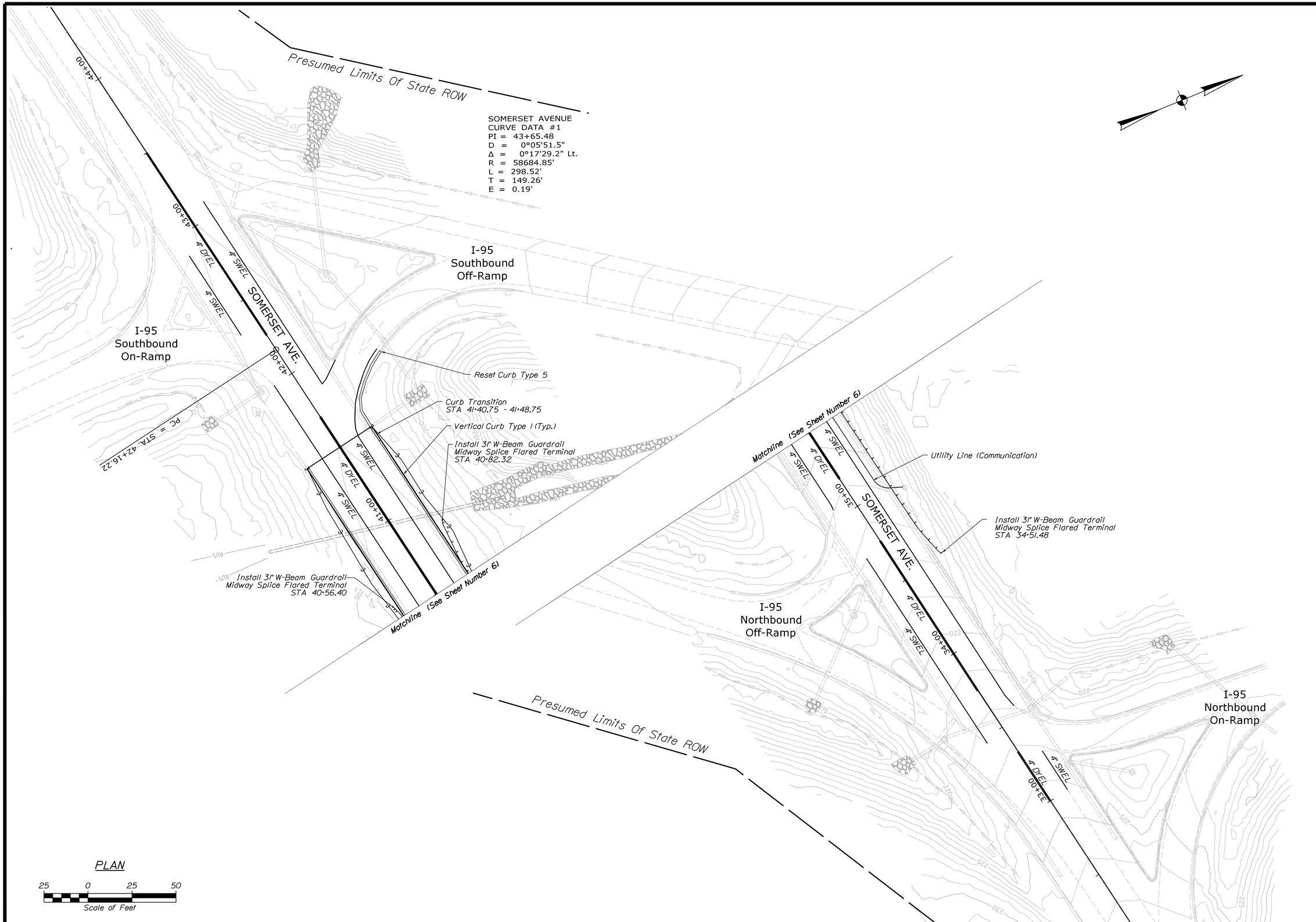

STATE OF MAINE
DEPARTMENT OF TRANSPORTATION

PROJECT NO. 2563106 & 2875400

WIN 25631.06, 25631.07, & 28754.00
BRIDGE NO. 1447 & 5985

BRIDGE PLANS

PROJ. MANAGER	J. BIRASK	BY	DATE
DESIGN-DETAILED	S. LINDSLEY	E. MORRISON	06-24
CHECKED-REVIEWED	D. WHITE	B. COLBURN	06-24
DESIGN2-DETAILED2	N. EDMAN	J. FITZ	06-24
DESIGN3-DETAILED3			
REVISIONS 1			
REVISIONS 2			
REVISIONS 3			
REVISIONS 4			
FIELD CHANGES			

SIGNATURE

P.E. NUMBER

DATE

I-95 SB & NB OVER SOMERSET AVE
BRIDGE NOS. 1447 & 5985
SOMERSET AVENUE LOWERING
PITTSFIELD SOMERSET COUNTY

GENERAL PLANS

SHEET NUMBER
7
OF 110

Filename: ...\002_GenPlan_5985-1447o.dgn Division: Username: jfitzpatrick Date:6/10/2024

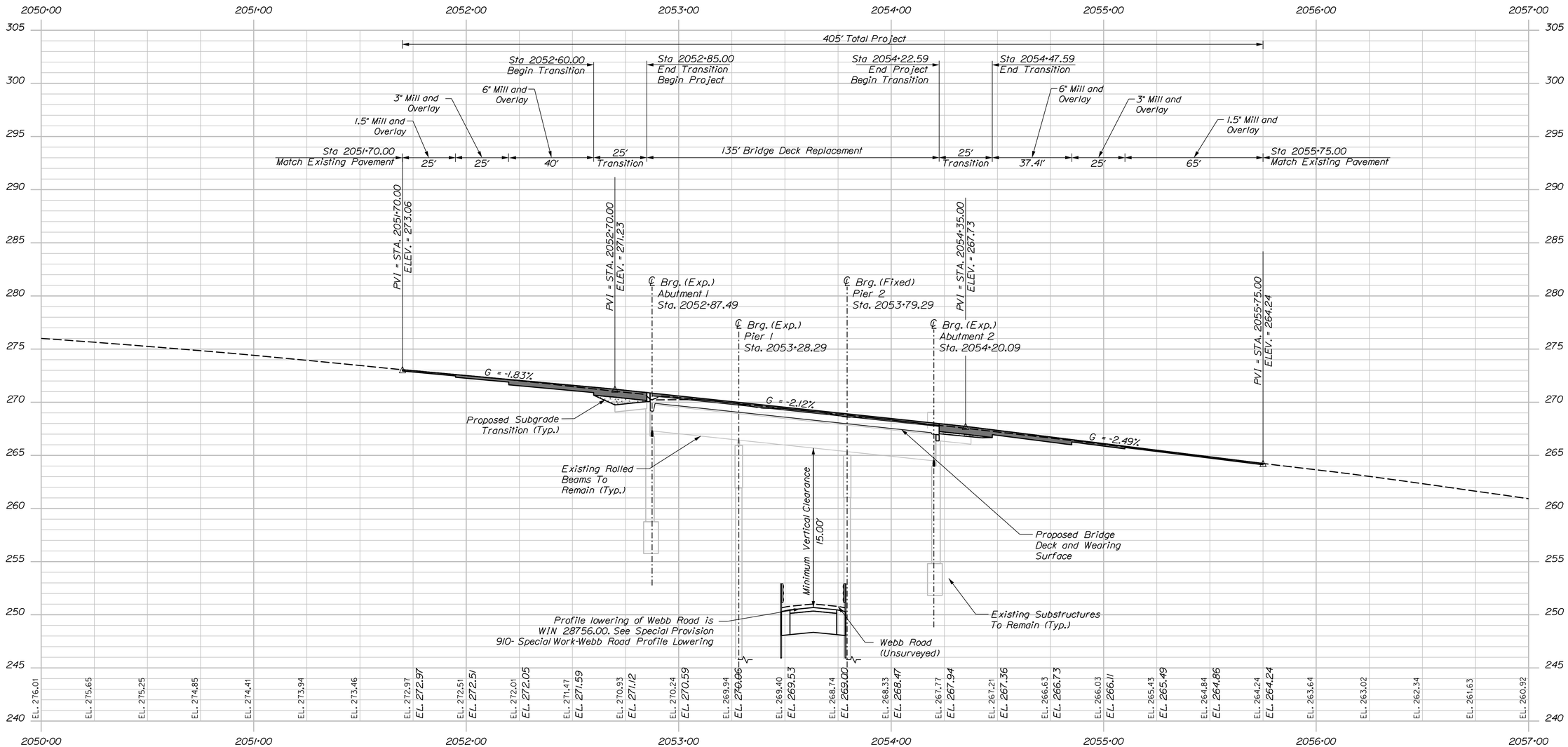

PROFILE
INTERSTATE 95 SOUTHBOUND OVER WEBB ROAD

PROFILE

Horiz. 25 0 25 50
Vert. 5 0 5 10
Scale of Feet

STATE OF MAINE
DEPARTMENT OF TRANSPORTATION

PROJECT NO. 2563106

WIN 25631.08

BRIDGE NO. 1449

BRIDGE PLANS

		BY	DATE
PROJ. MANAGER	J. BRASK		
DESIGN-DETAILED	S. LINDSLEY	E. MORRISON	06-24
CHECKED-REVIEWED	D. WHITE	B. COLBURN	06-24
DESIGN2-DETAILED2	N. EDMAN	J. FITZ	06-24
DESIGN3-DETAILED3			
REVISIONS 1			
REVISIONS 2			
REVISIONS 3			
REVISIONS 4			
FIELD CHANGES			

SIGNATURE

P.E. NUMBER

DATE

I-95 SB/ WEBB ROAD
BRIDGE NO. 1449
PITTSFIELD SOMERSET COUNTY

PROFILE

SHEET NUMBER
8
OF 110

Filename: ...\005_Profile-1449.dgn Division: Username: jfitzpatrick Date:6/10/2024

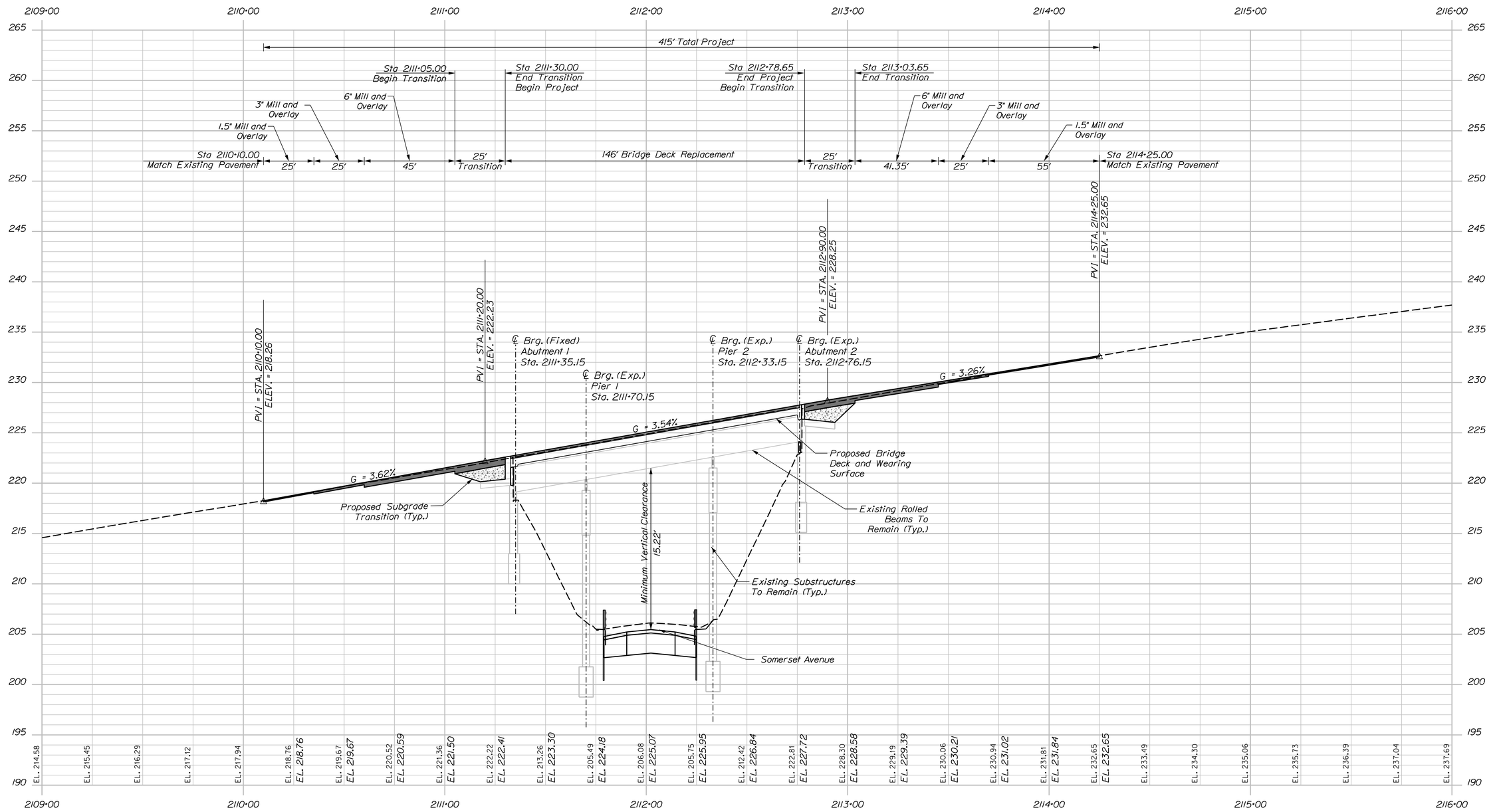

PROFILE
INTERSTATE 95 SOUTHBOUND OVER SOMERSET AVENUE

PROFILE

Horiz. 25 0 25 50
Vert. 5 0 5 10
Scale of Feet

STATE OF MAINE
DEPARTMENT OF TRANSPORTATION

PROJECT NO. 2563106

BRIDGE NO. 1447 WIN 25631.06 BRIDGE PLANS

PROJ. MANAGER	J. BRASK	BY	DATE
DESIGN-DETAILED	S. LINDSLEY	E. MORRISON	06-24
CHECKED-REVIEWED	D. WHITE	B. COLBURN	06-24
DESIGN2-DETAILED2	N. EDMAN	J. FITZ	06-24
DESIGN3-DETAILED3			
REVISIONS 1			
REVISIONS 2			
REVISIONS 3			
REVISIONS 4			
FIELD CHANGES			

SIGNATURE

P.E. NUMBER

DATE

I-95 SB/ SOMERSET AVE
BRIDGE NO. 1447
PITTSFIELD SOMERSET COUNTY

PROFILE

SHEET NUMBER
9
OF 110

Filename: ...\004_Profile-1447.dgn Division: Username: jfitzpatrick Date:6/10/2024

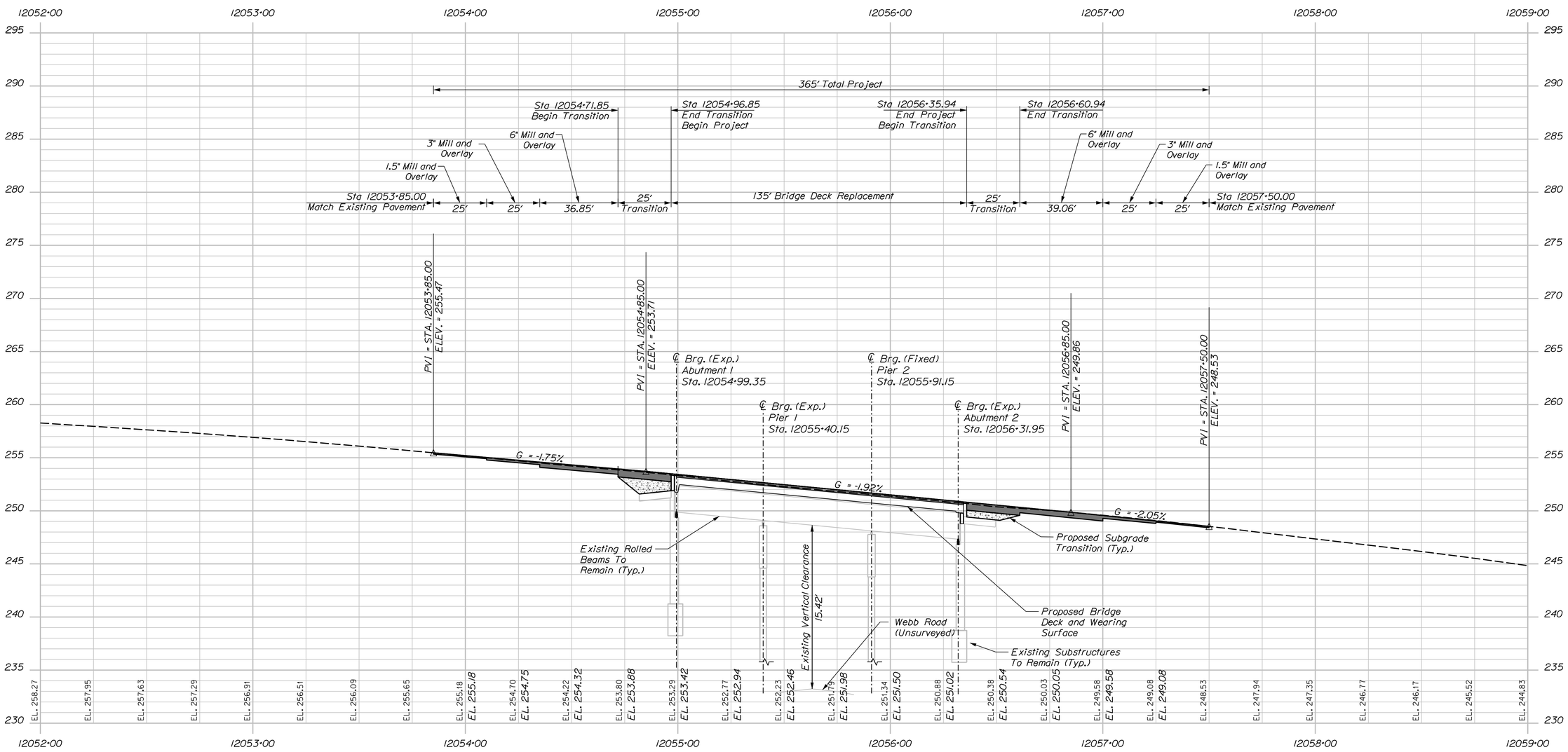

PROFILE
INTERSTATE 95 NORTHBOUND OVER WEBB ROAD

PROFILE

Horiz. 25 0 25 50

Vert. 5 0 5 10

Scale of Feet

STATE OF MAINE
DEPARTMENT OF TRANSPORTATION

PROJECT NO. 2563106

WIN 25631.09

BRIDGE NO. 5984

BRIDGE PLANS

PROJ. MANAGER	J. BRASK	BY	DATE
DESIGN-DETAILED	S. LINDSLEY	E. MORRISON	06-24
CHECKED-REVIEWED	D. WHITE	B. COLBURN	06-24
DESIGN2-DETAILED2	N. EDMAN	J. FITZ	06-24
DESIGN3-DETAILED3			
REVISIONS 1			
REVISIONS 2			
REVISIONS 3			
REVISIONS 4			
FIELD CHANGES			

SIGNATURE

P.E. NUMBER

DATE

I-95 NB/ WEBB ROAD
BRIDGE NO. 5984
PITTSFIELD SOMERSET COUNTY

PROFILE

SHEET NUMBER

10

OF 110

Filename: ...\006_Profile-5984.dgn Division: Username: jfitzpatrick Date:6/10/2024

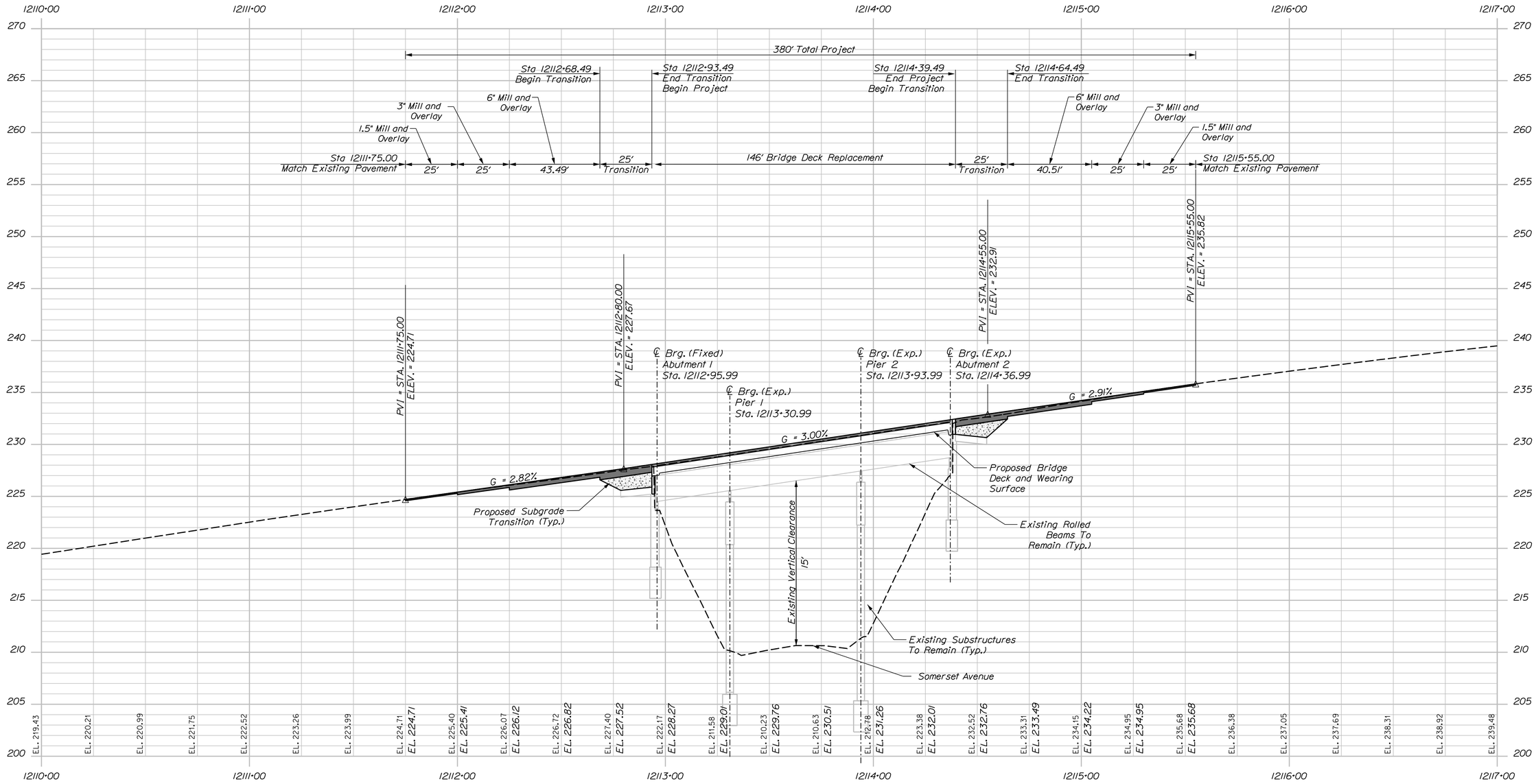

PROFILE
INTERSTATE 95 NORTHBOUND OVER SOMERSET AVENUE

PROFILE

Horiz. 25 0 25 50
Vert. 5 0 5 10
Scale of Feet

STATE OF MAINE
DEPARTMENT OF TRANSPORTATION

PROJECT NO. 2563106

WIN 25631.07

BRIDGE NO. 5985

BRIDGE PLANS

PROJ. MANAGER	J. BRASK	BY	DATE
DESIGN-DETAILED	S. LINDSLEY	E. MORRISON	06-24
CHECKED-REVIEWED	D. WHITE	B. COLBURN	06-24
DESIGN2-DETAILED2	N. EDMAN	J. FITZ	06-24
DESIGN3-DETAILED3			
REVISIONS 1			
REVISIONS 2			
REVISIONS 3			
REVISIONS 4			
FIELD CHANGES			

SIGNATURE

P.E. NUMBER

DATE

I-95 NB/ SOMERSET AVE
BRIDGE NO. 5985
PITTSFIELD SOMERSET COUNTY

PROFILE

SHEET NUMBER
11
OF 110

Filename: ...\007_Profile-5985.dgn Division: Username: jfitzpatrick Date:6/10/2024

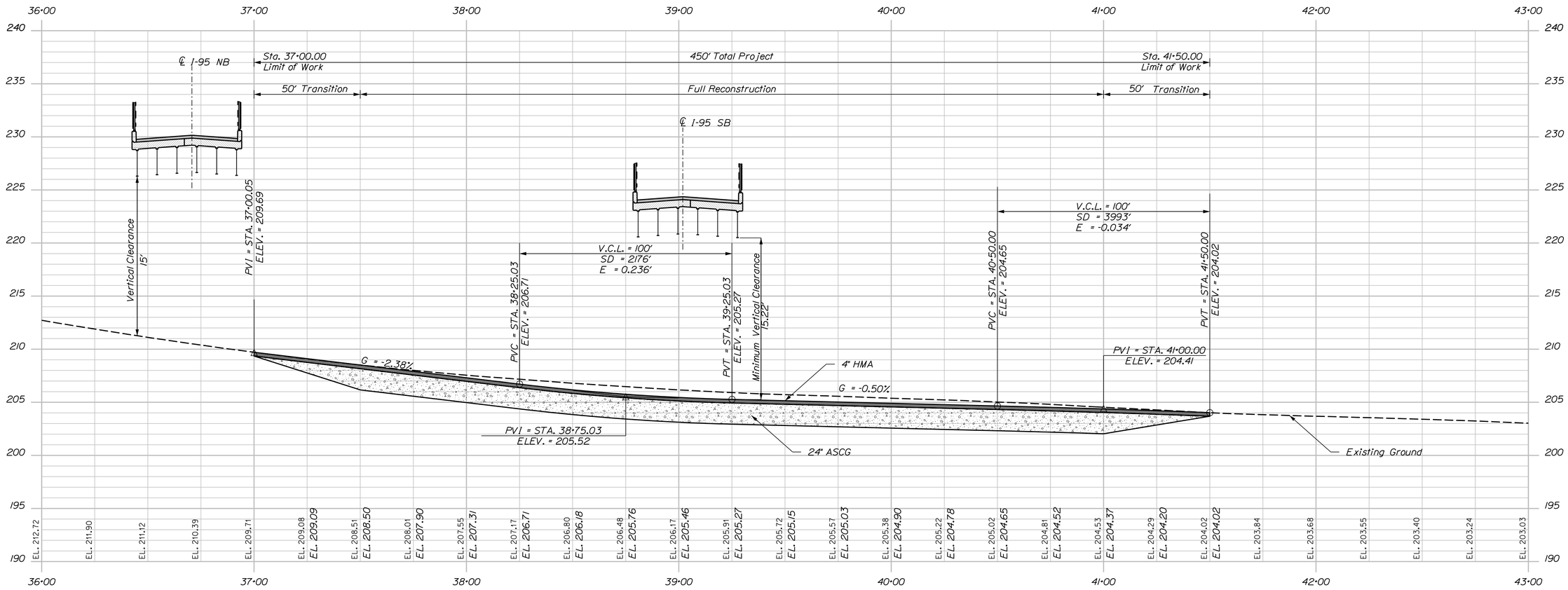

PROFILE
SOMERSET AVENUE

PROFILE

Horiz. 25 0 25 50

Vert. 5 0 5 10

Scale of Feet

STATE OF MAINE
DEPARTMENT OF TRANSPORTATION

PROJECT NO. 2875400

WIN 28754.00

BRIDGE NO. 1447

BRIDGE PLANS

PROJ. MANAGER	J. BRASK	BY	DATE
DESIGN-DETAILED	S. LINDSLEY	E. MORRISON	06-24
CHECKED-REVIEWED	D. WHITE	B. COLBURN	06-24
DESIGN2-DETAILED2	N. EDMAN	J. FITZ	06-24
DESIGN3-DETAILED3			
REVISIONS 1			
REVISIONS 2			
REVISIONS 3			
REVISIONS 4			
FIELD CHANGES			

SIGNATURE

P.E. NUMBER

DATE

SOMERSET AVENUE LOWERING

PITTSFIELD SOMERSET COUNTY

PROFILE

SHEET NUMBER

12

OF 110

Filename: ...\007a_Profile_Somerset Ave.dgn Division: Username: jfitzpatrick Date:6/10/2024

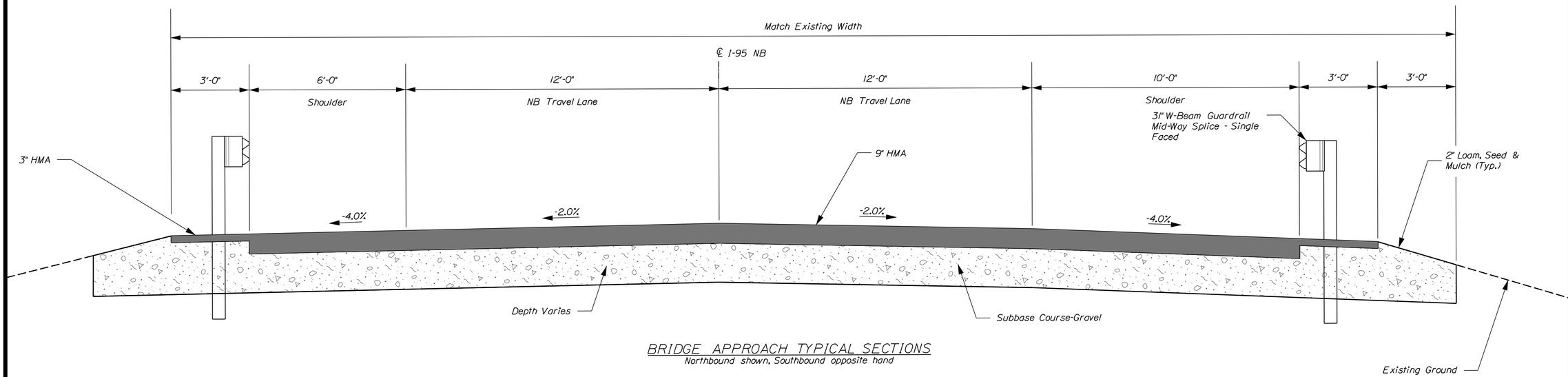

BRIDGE APPROACH TYPICAL SECTIONS

Northbound shown, Southbound opposite hand

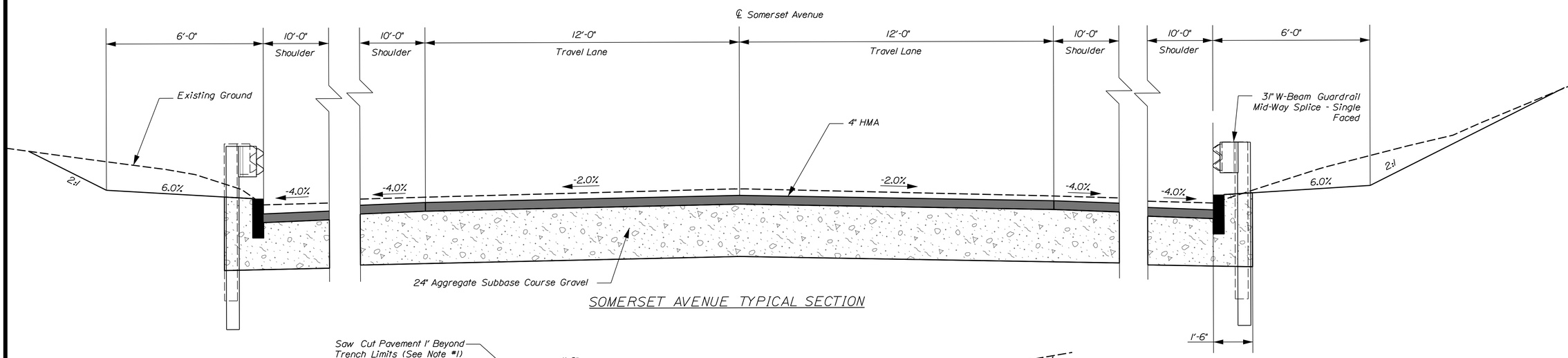

SOMERSET AVENUE TYPICAL SECTION

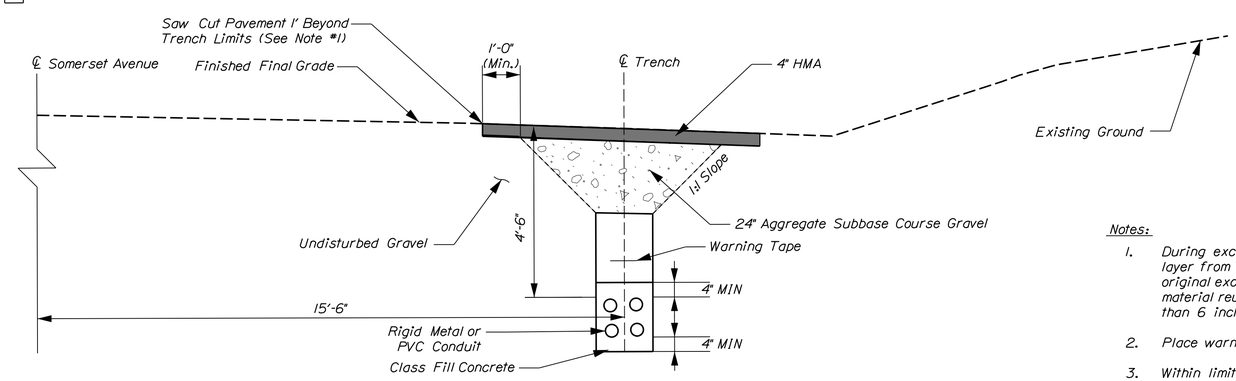

UTILITY TRENCH DETAIL

Notes:

1. During excavation, separate the existing subbase gravel layer from the common excavation below. Reuse the original excavated materials if suitable. Excavation material reused for backfill shall have all material larger than 6 inches removed.
2. Place warning tape 18" to 24" above top of conduit.
3. Within limits of full depth reconstruction, may use temporary pavement over utility trench.

STATE OF MAINE
DEPARTMENT OF TRANSPORTATION

PROJECT NO. 2563106, 2875400, & 2875600

WIN 25631.06, 25631.07, 25631.08, 25631.09, 28754.00, & 28756.00

BRIDGE NO. 1447, 1449, 5984, 5985

BRIDGE PLANS

PROJ. MANAGER	J. BRASK	BY	DATE
DESIGN-DETAILED	S. LINDSLEY	E. MORRISON	06-24
CHECKED-REVIEWED	D. WHITE	B. COLBURN	06-24
DESIGN2-DETAILED2	N. EDMAN	J. FITZ	06-24
DESIGN3-DETAILED3			
REVISIONS 1			
REVISIONS 2			
REVISIONS 3			
REVISIONS 4			
FIELD CHANGES			

SIGNATURE

P.E. NUMBER

DATE

I-95 SB & NB OVER WEBB RD & SOMERSET AVE
BRIDGE NO. 1447, 1449, 5984, 5985
PITTSFIELD SOMERSET COUNTY

TYPICAL SECTIONS

SHEET NUMBER

13

OF 110

Filename: ...\047_Typicals_bridge approach.dgn Division: Username: jfitzpatrick Date:6/10/2024

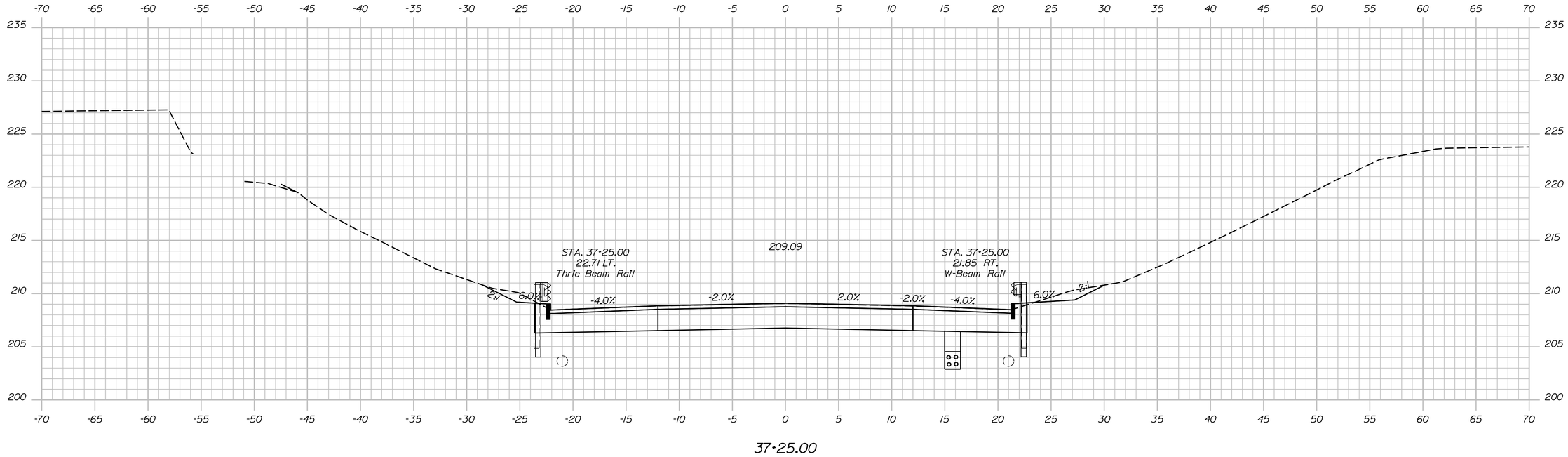

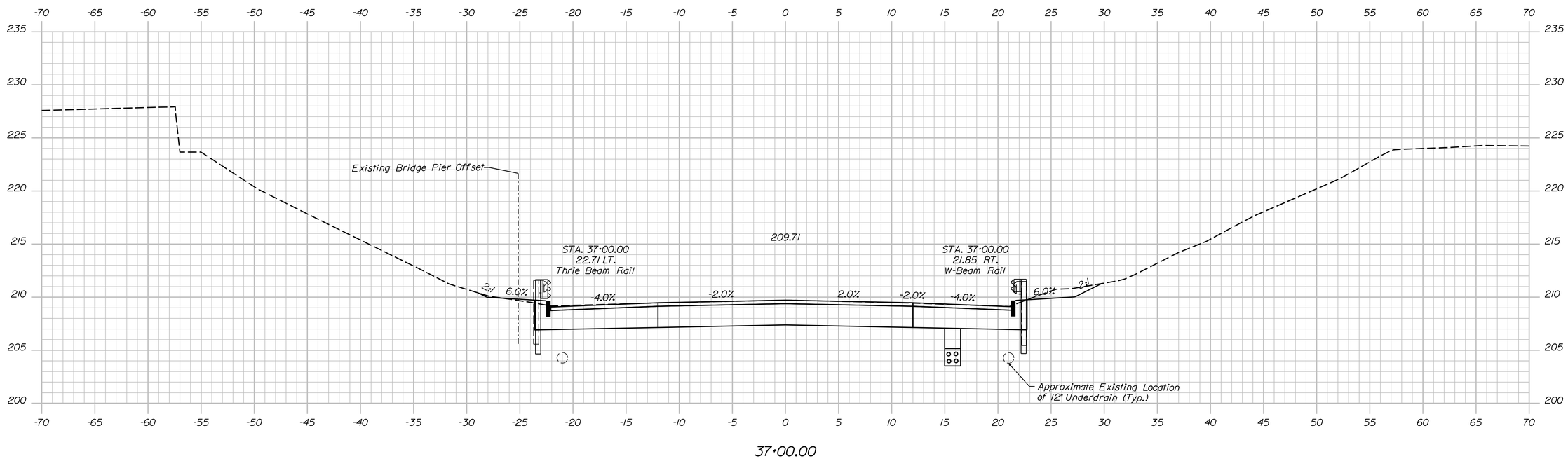

Sta. 37+00.00 to Sta. 37+25.00

STATE OF MAINE
DEPARTMENT OF TRANSPORTATION

PROJECT NO. 2875400

WIN 28754.00

BRIDGE NO. 1447

BRIDGE PLANS

SIGNATURE

P.E. NUMBER

DATE

		BY	DATE
PROJ. MANAGER	J. BRASK		
DESIGN-DETAILED	S. LINDSLEY	E. MORRISON	06-24
CHECKED-REVIEWED	D. WHITE	B. COLBURN	06-24
DESIGN2-DETAILED2	N. EDMAN	J. FITZ	06-24
DESIGN3-DETAILED3			
REVISIONS 1			
REVISIONS 2			
REVISIONS 3			
REVISIONS 4			
FIELD CHANGES			

SOMERSET AVENUE LOWERING

PITTSFIELD SOMERSET COUNTY

SOMERSET AVE CROSS SECTIONS

SHEET NUMBER

14

OF 110

Filename: ...\Xsects_Somerset Ave.dgn Division: Username: jfitzpatrick Date:6/10/2024

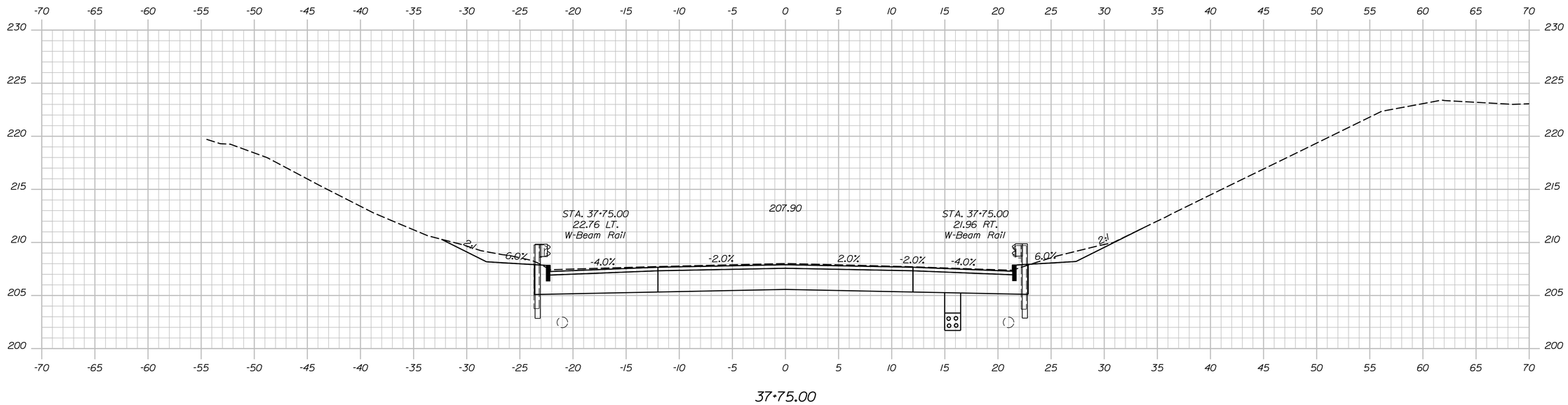

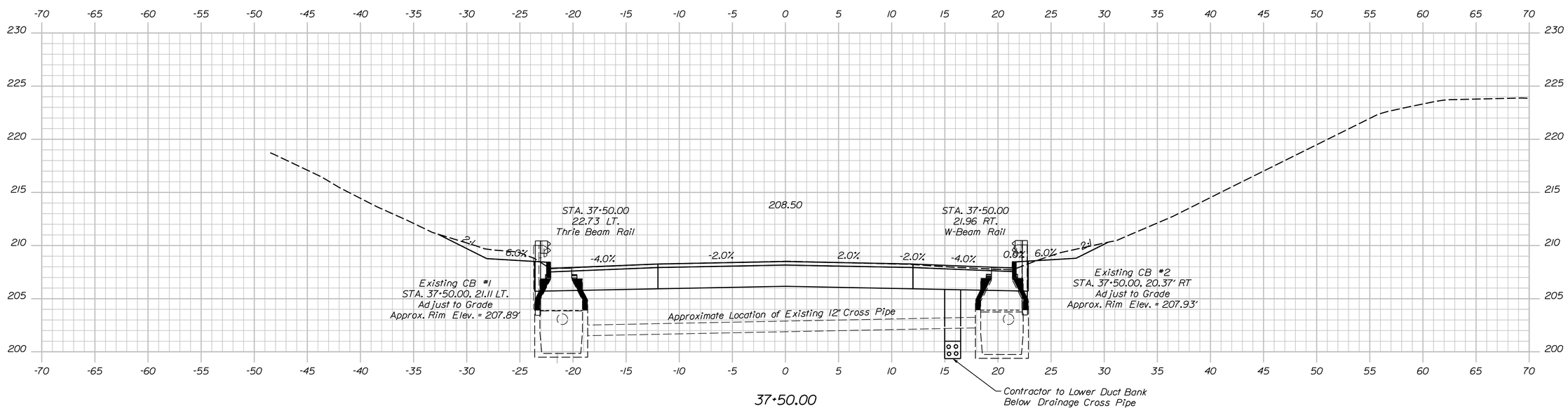

STATE OF MAINE
DEPARTMENT OF TRANSPORTATION

PROJECT NO. 2875400

WIN 28754.00

BRIDGE NO. 1447

BRIDGE PLANS

SIGNATURE

P.E. NUMBER

DATE

PROJ. MANAGER	J. BRASK	BY	DATE
DESIGN-DETAILED	S. LINDSLEY	E. MORRISON	06-24
CHECKED-REVIEWED	D. WHITE	B. COLBURN	06-24
DESIGN2-DETAILED2	N. EDMAN	J. FITZ	06-24
DESIGN3-DETAILED3			
REVISIONS 1			
REVISIONS 2			
REVISIONS 3			
REVISIONS 4			
FIELD CHANGES			

SOMERSET AVENUE LOWERING

PITTSFIELD SOMERSET COUNTY

SOMERSET AVE CROSS SECTIONS

SHEET NUMBER

15

OF 110

Sta. 37+50.00 to Sta. 37+75.00

Filename: ...\Xsects_Somerset Ave.dgn Division: Username: jfitzpatrick Date:6/10/2024

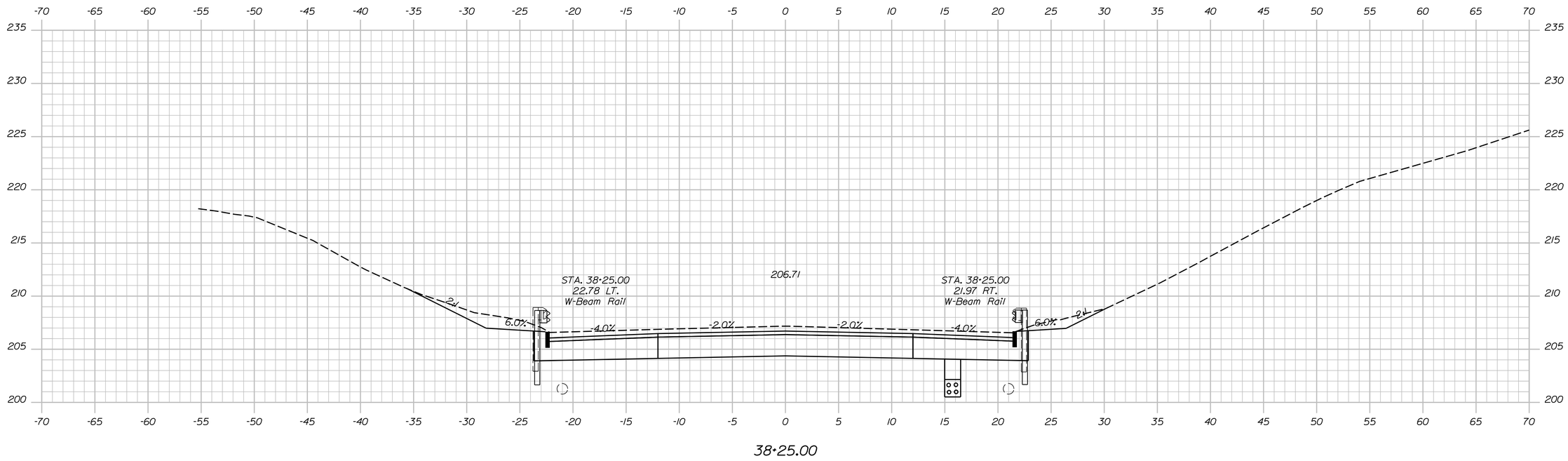

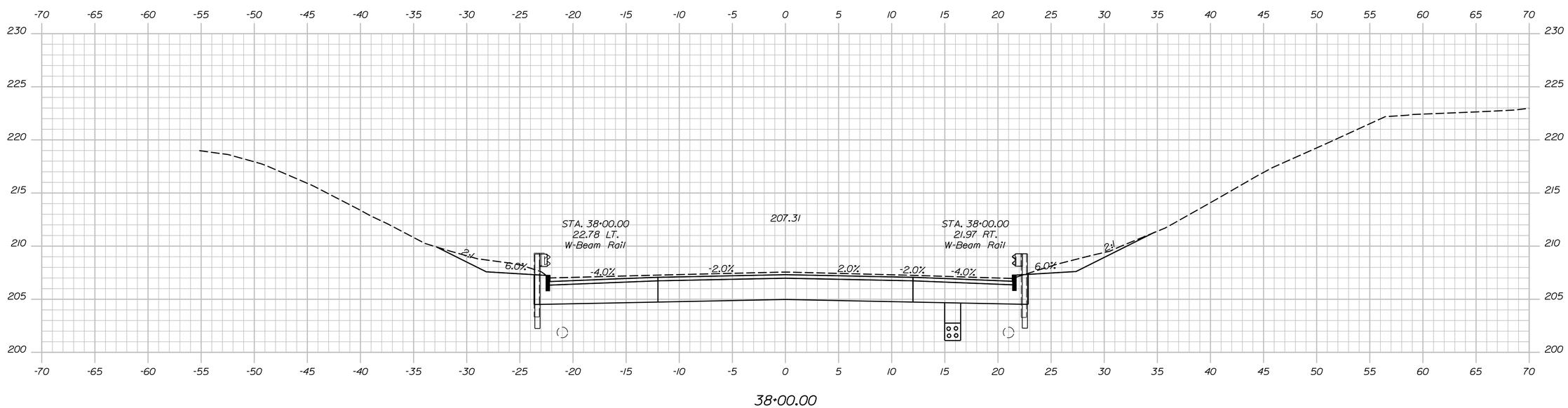

Sta. 38+00.00 to Sta. 38+25.00

STATE OF MAINE
DEPARTMENT OF TRANSPORTATION

PROJECT NO. 2875400

WIN 28754.00

BRIDGE NO. 1447

BRIDGE PLANS

SIGNATURE

P.E. NUMBER

DATE

		BY	DATE
PROJ. MANAGER	J. BRASK		
DESIGN-DETAILED	S. LINDSLEY	E. MORRISON	06-24
CHECKED-REVIEWED	D. WHITE	B. COLBURN	06-24
DESIGN2-DETAILED2	N. EDMAN	J. FITZ	06-24
DESIGN3-DETAILED3			
REVISIONS 1			
REVISIONS 2			
REVISIONS 3			
REVISIONS 4			
FIELD CHANGES			

SOMERSET AVENUE LOWERING

PITTSFIELD SOMERSET COUNTY

SOMERSET AVE CROSS SECTIONS

SHEET NUMBER

16

OF 110

Filename: ...\Xsects_Somerset Ave.dgn Division: Username: jfitzpatrick Date:6/10/2024

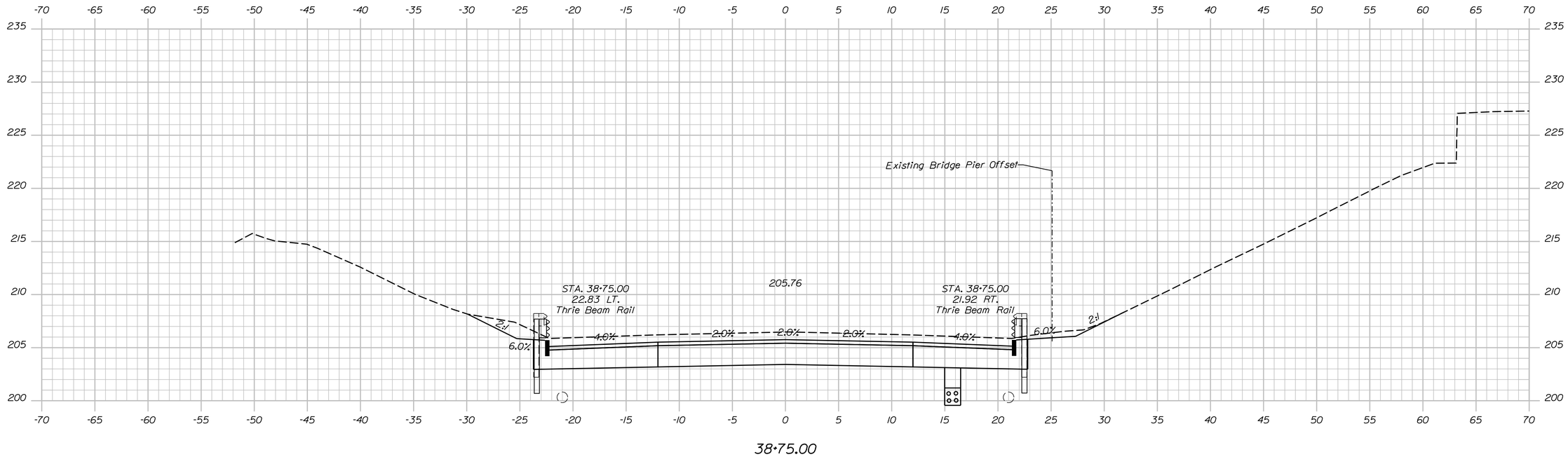

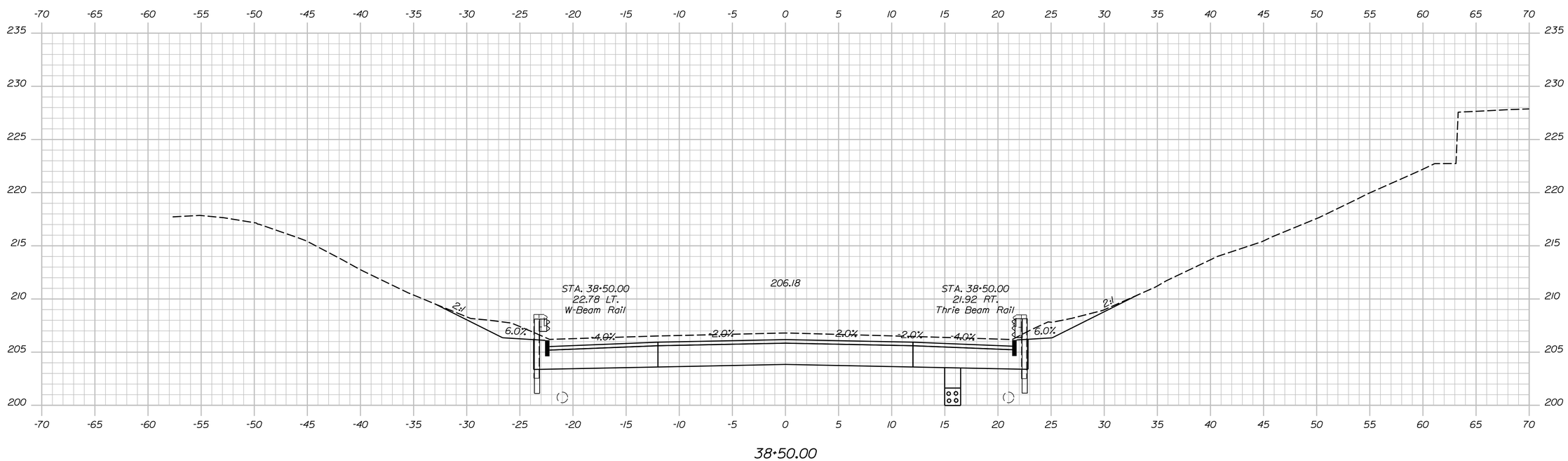

STATE OF MAINE
DEPARTMENT OF TRANSPORTATION

PROJECT NO. 2875400

WIN 28754.00

BRIDGE NO. 1447

BRIDGE PLANS

PROJ. MANAGER	J. BRASK		
DESIGN-DETAILED	S. LINDSLEY	E. MORRISON	06-24
CHECKED-REVIEWED	D. WHITE	B. COLBURN	06-24
DESIGN2-DETAILED2	N. EDMAN	J. FITZ	06-24
DESIGN3-DETAILED3			
REVISIONS 1			
REVISIONS 2			
REVISIONS 3			
REVISIONS 4			
FIELD CHANGES			

SIGNATURE

P.E. NUMBER

DATE

SOMERSET AVENUE LOWERING

PITTSFIELD SOMERSET COUNTY

SOMERSET AVE CROSS SECTIONS

SHEET NUMBER

17

OF 110

Sta. 38+50.00 to Sta. 38+75.00

Filename: ...\Xsects_Somerset Ave.dgn Division: Username: jfitzpatrick Date:6/10/2024

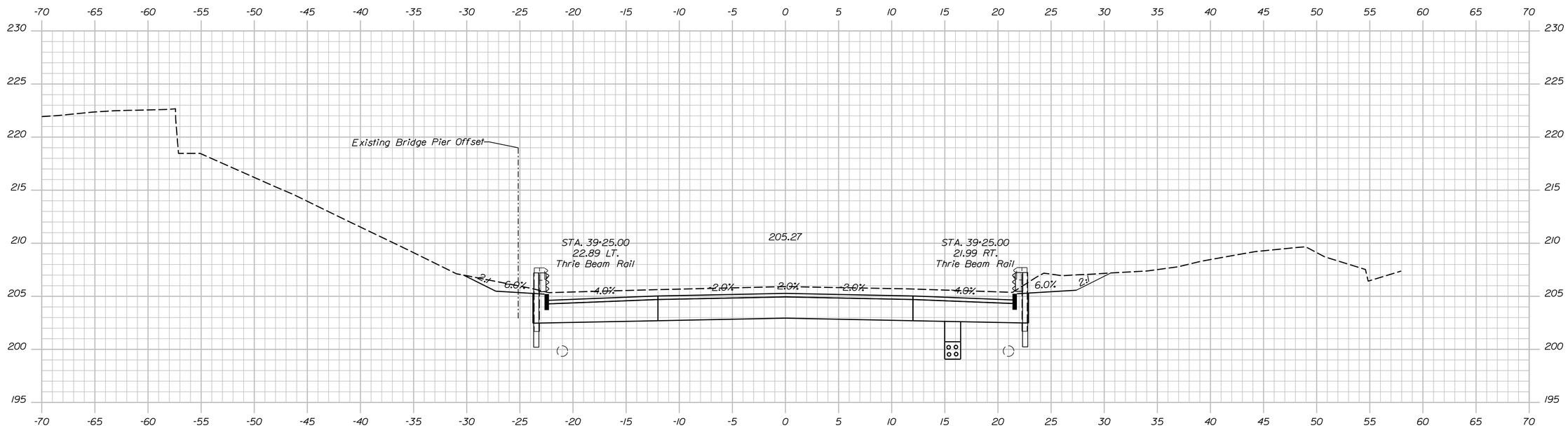

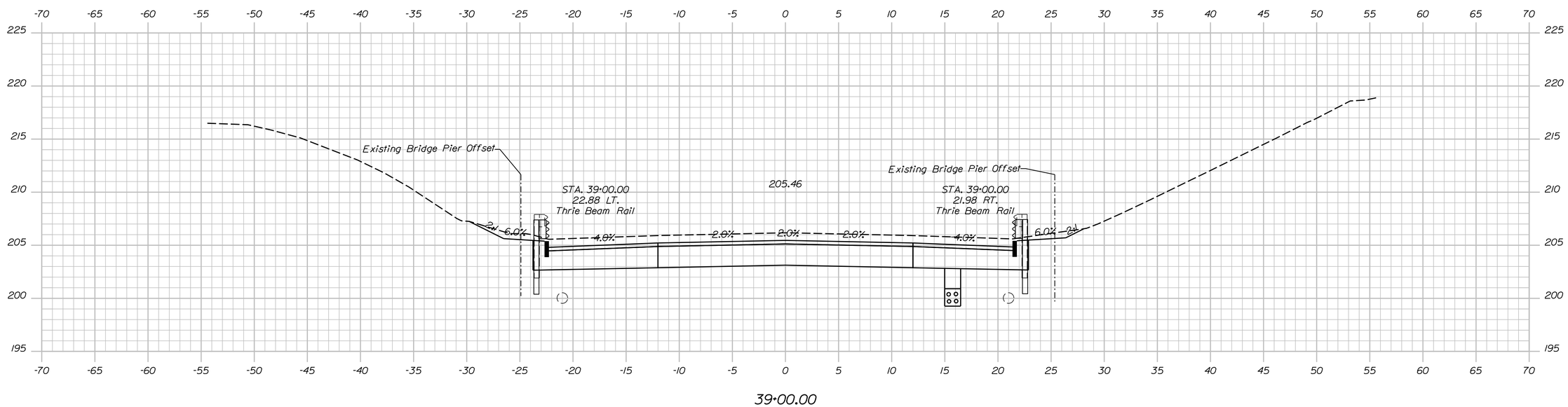

STATE OF MAINE
DEPARTMENT OF TRANSPORTATION

PROJECT NO. 2875400

WIN 28754.00

BRIDGE NO. 1447

BRIDGE PLANS

		BY	DATE
PROJ. MANAGER	J. BRASK		
DESIGN-DETAILED	S. LINDSLEY	E. MORRISON	06-24
CHECKED-REVIEWED	D. WHITE	B. COLBURN	06-24
DESIGN2-DETAILED2	N. EDMAN	J. FITZ	06-24
DESIGN3-DETAILED3			
REVISIONS 1			
REVISIONS 2			
REVISIONS 3			
REVISIONS 4			
FIELD CHANGES			

SIGNATURE

P.E. NUMBER

DATE

SOMERSET AVENUE LOWERING

PITTSFIELD SOMERSET COUNTY

SOMERSET AVE CROSS SECTIONS

SHEET NUMBER

18

OF 110

Sta. 39+00.00 to Sta. 39+25.00

Filename: ...\Xsects_Somerset Ave.dgn Division: Username: jfitzpatrick Date:6/10/2024

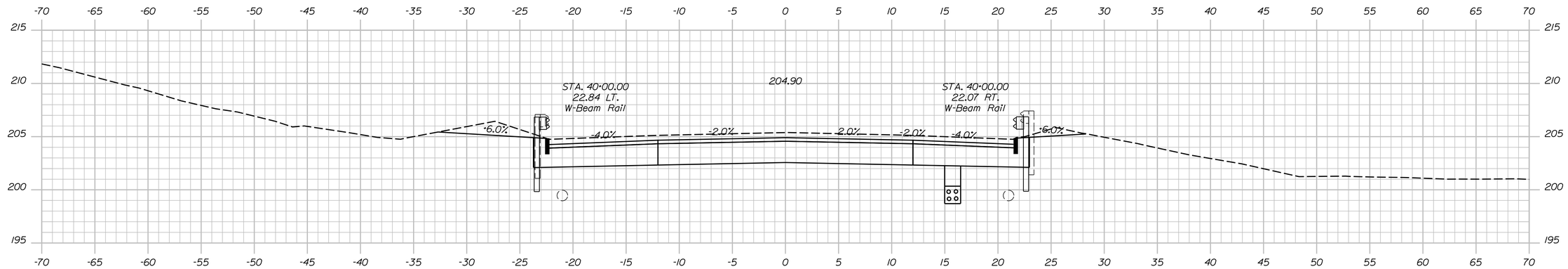

40+00.00

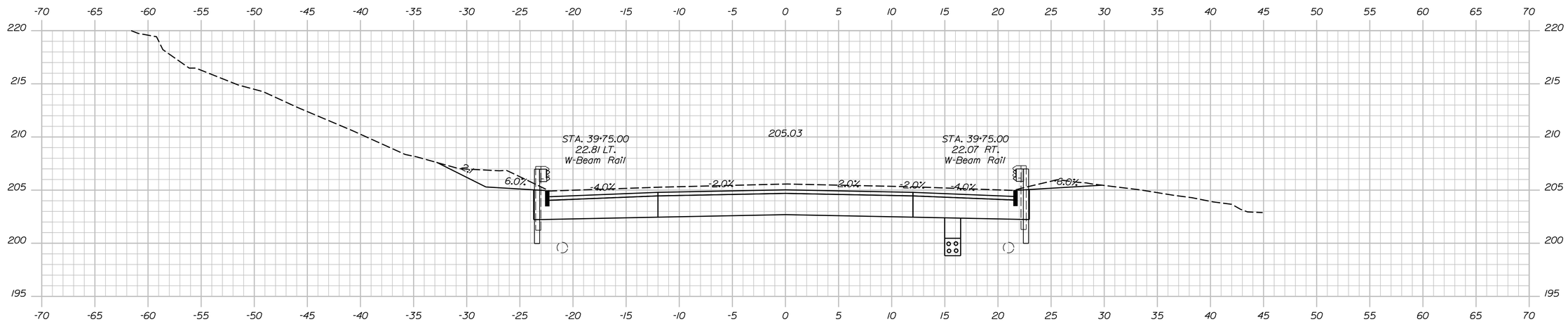

39+75.00

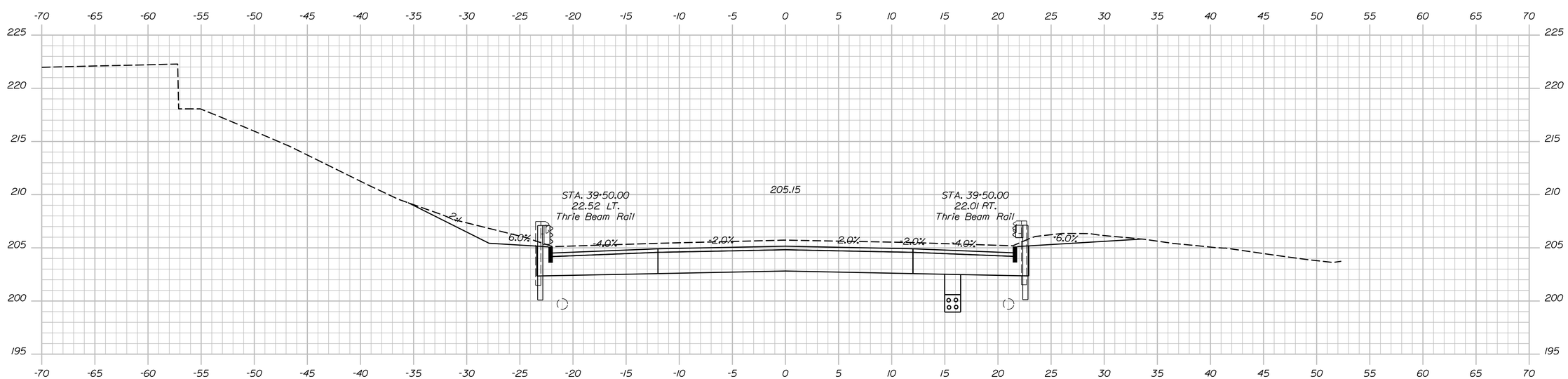

39+50.00

STATE OF MAINE
DEPARTMENT OF TRANSPORTATION

PROJECT NO. 2875400

WIN 28754.00

BRIDGE NO. 1447

BRIDGE PLANS

SIGNATURE

P.E. NUMBER

DATE

PROJ. MANAGER	J. BRASK	BY	DATE
DESIGN-DETAILED	S. LINDSLEY	E. MORRISON	06-24
CHECKED-REVIEWED	D. WHITE	B. COLBURN	06-24
DESIGN2-DETAILED2	N. EDMAN	J. FITZ	06-24
DESIGN3-DETAILED3			
REVISIONS 1			
REVISIONS 2			
REVISIONS 3			
REVISIONS 4			
FIELD CHANGES			

SOMERSET AVENUE LOWERING

PITTSFIELD SOMERSET COUNTY

SOMERSET AVE CROSS SECTIONS

SHEET NUMBER

19

OF 110

Sta. 39+50.00 to Sta. 40+00.00

Filename: ...\Xsects_Somerset Ave.dgn Division: Username: jfitzpatrick Date:6/10/2024

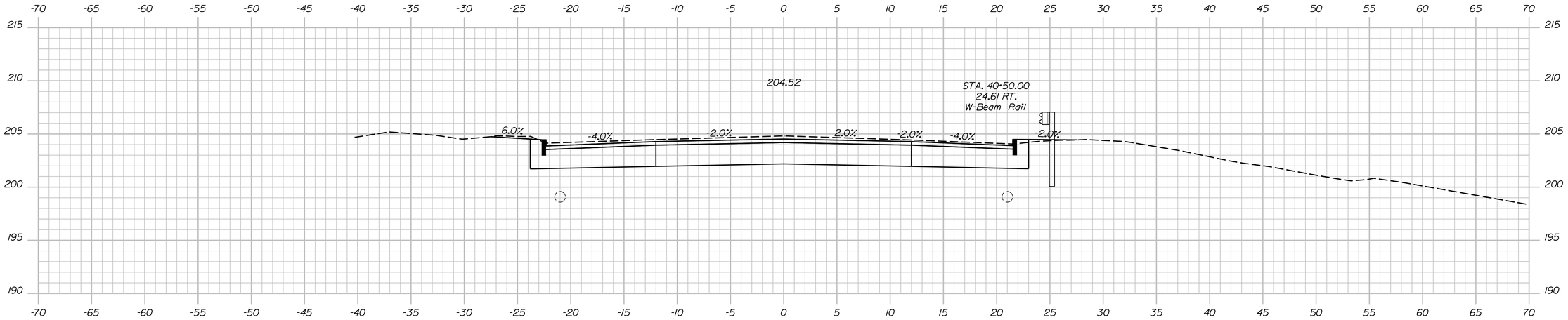

40+75.00

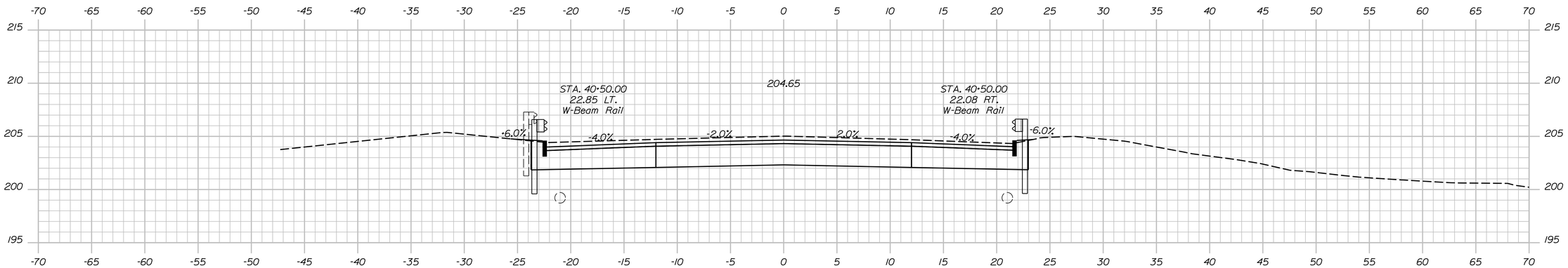

40+50.00

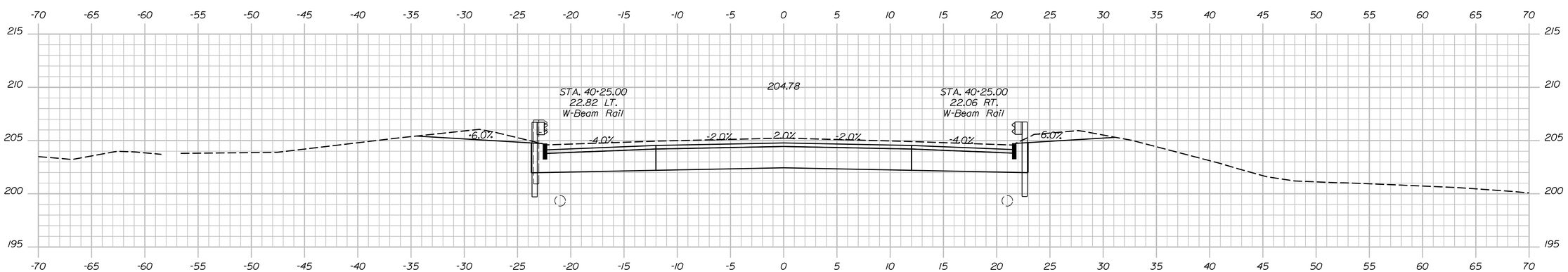

40+25.00

STATE OF MAINE
DEPARTMENT OF TRANSPORTATION

PROJECT NO. 2875400

WIN 28754.00

BRIDGE NO. 1447

BRIDGE PLANS

		BY	DATE
PROJ. MANAGER	J. BRASK		
DESIGN-DETAILED	S. LINDSLEY	E. MORRISON	06-24
CHECKED-REVIEWED	D. WHITE	B. COLBURN	06-24
DESIGN2-DETAILED2	N. EDMAN	J. FITZ	06-24
DESIGN3-DETAILED3			
REVISIONS 1			
REVISIONS 2			
REVISIONS 3			
REVISIONS 4			
FIELD CHANGES			

SIGNATURE

P.E. NUMBER

DATE

SOMERSET AVENUE LOWERING

PITTSFIELD SOMERSET COUNTY

SOMERSET AVE CROSS SECTIONS

SHEET NUMBER

20

OF 110

Sta. 40+25.00 to Sta. 40+75.00

Filename: ...\Xsects_Somerset Ave.dgn Division: Username: jfitzpatrick Date:6/10/2024

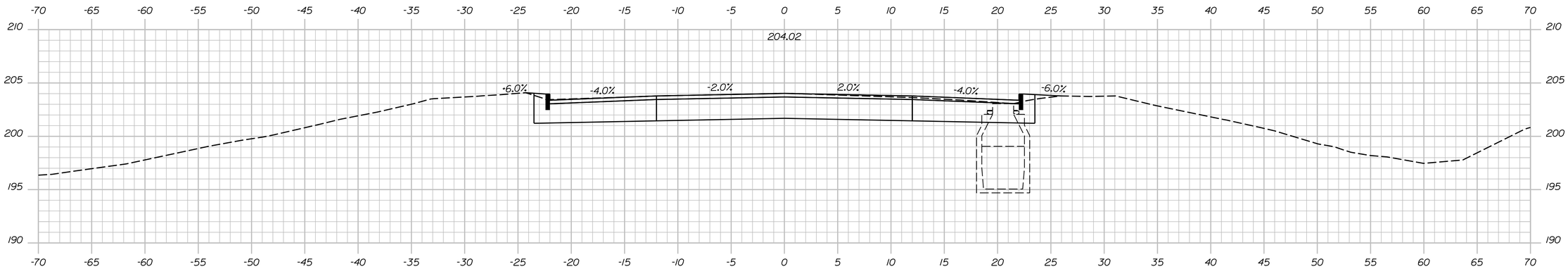

41+50.00

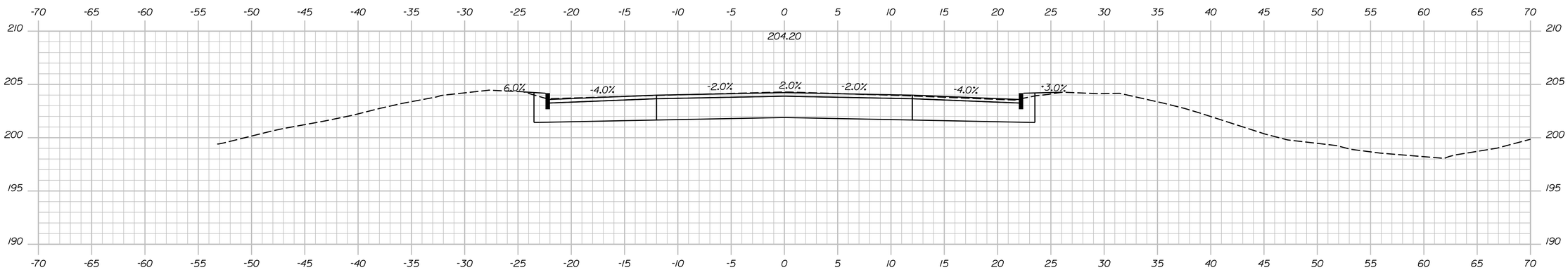

41+25.00

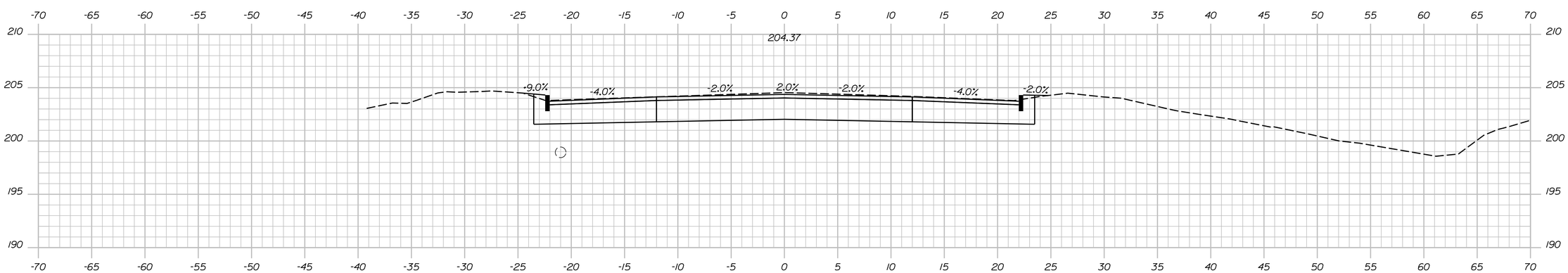

41+00.00

STATE OF MAINE
DEPARTMENT OF TRANSPORTATION

PROJECT NO. 2875400

WIN 28754.00

BRIDGE NO. 1447

BRIDGE PLANS

PROJ. MANAGER	J. BRASK	BY	DATE
DESIGN-DETAILED	S. LINDSLEY	E. MORRISON	06-24
CHECKED-REVIEWED	D. WHITE	B. COLBURN	06-24
DESIGN2-DETAILED2	N. EDMAN	J. FITZ	06-24
DESIGN3-DETAILED3			
REVISIONS: 1			
REVISIONS: 2			
REVISIONS: 3			
REVISIONS: 4			
FIELD CHANGES			

SIGNATURE

P.E. NUMBER

DATE

SOMERSET AVENUE LOWERING

PITTSFIELD SOMERSET COUNTY

SOMERSET AVE CROSS SECTIONS

SHEET NUMBER

21

OF 110

Sta. 41+00.00 to Sta. 41+50.00

Filename: ...\Xsects_Somerset Ave.dgn Division: Username: jfitzpatrick Date:6/10/2024

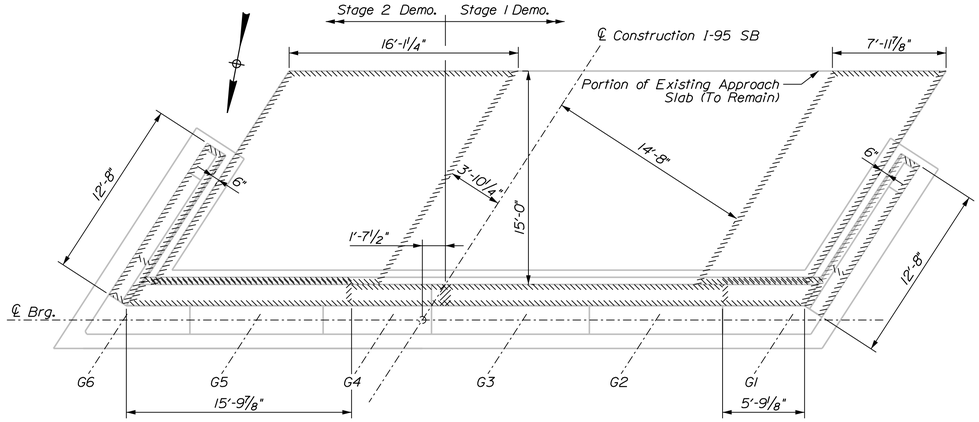

ABUTMENT 1 DEMOLITION PLAN

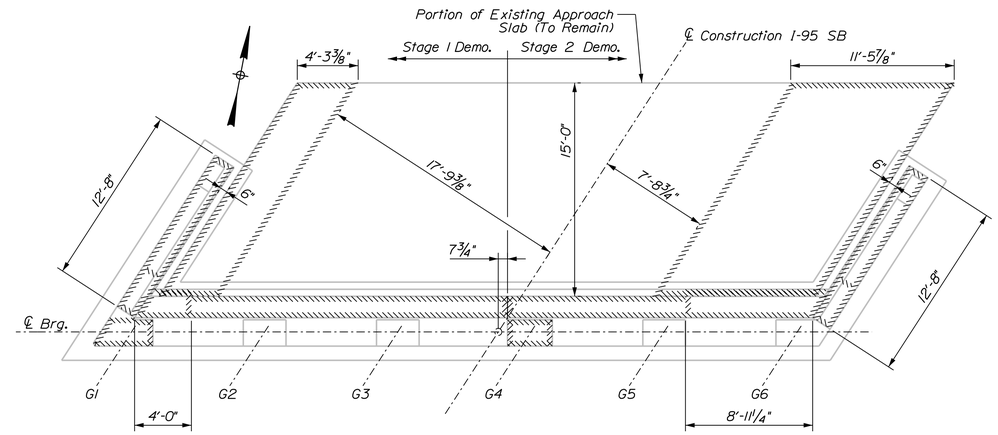

ABUTMENT 2 DEMOLITION PLAN

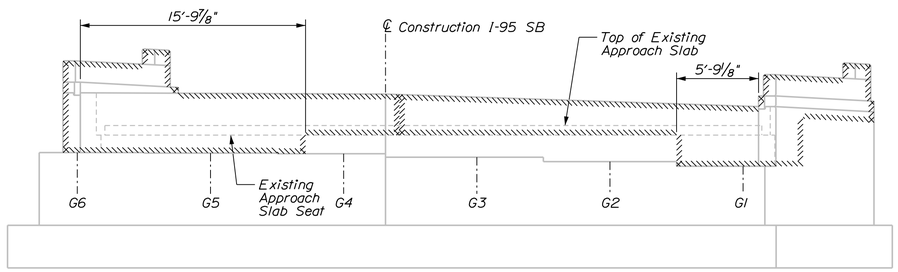

ABUTMENT 1 DEMOLITION ELEVATION

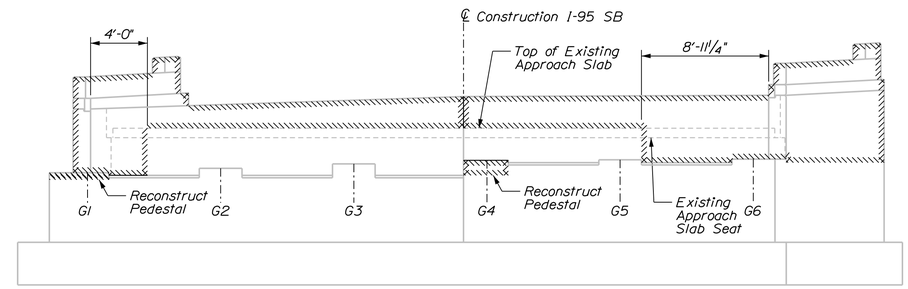

ABUTMENT 2 DEMOLITION ELEVATION

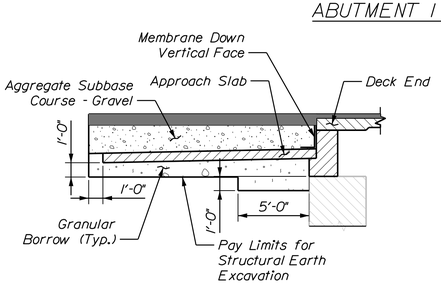

ABUTMENT 1
FULL HEIGHT BACKWALL REPLACMENT
BACKFILL DETAIL

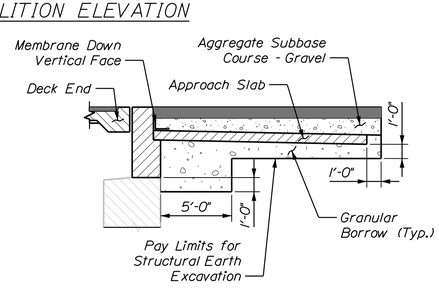

ABUTMENT 2
FULL HEIGHT BACKWALL REPLACMENT
BACKFILL DETAIL

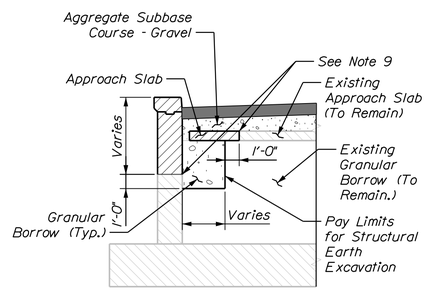

WINGWALL EARTHWORK DETAIL
Abutment 2 Shown, Abutment 1 Similar

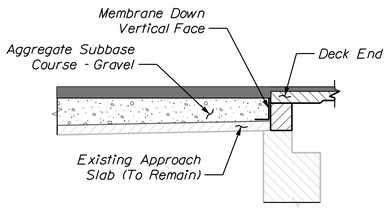

ABUTMENT 1
PARTIAL HEIGHT BACKWALL REPLACMENT
BACKFILL DETAIL

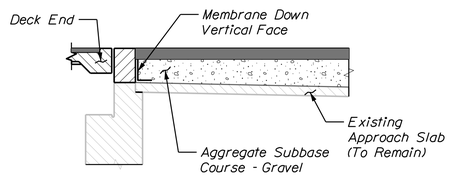

ABUTMENT 2
PARTIAL HEIGHT BACKWALL REPLACMENT
BACKFILL DETAIL

ABUTMENT AND WINGWALL MODIFICATION NOTES

1. The Contractor shall use care not to damage any existing reinforcing steel which is to remain. Any damaged reinforcing steel shall be replaced as directed by the Resident at no expense to the Department.
2. Before drilling and grouting new reinforcing steel, the Contractor shall locate reinforcing steel in existing concrete by non-destructive methods to avoid conflicts. All costs associated with this work shall be incidental to related Contract Items.
3. Reinforcing steel shall have 2 inches cover unless otherwise noted.
4. Existing abutment and wingwall concrete to be removed as shown on the plans shall be sawcut 1 inch deep prior to removal of existing concrete. All costs associated with this work shall be incidental to related Contract items.
5. Where drilling and anchoring of reinforcement is required, the Contractor shall use a material listed on the Maine Department of Transportation Qualified Products List of Concrete Adhesive Anchor Systems. The depth of embedment shall be sufficient to develop 125% of the yield strength of the bar per the manufacturer's recommendations or 12 inches, whichever is greater. Proposed anchoring material and embedment depth shall be submitted for approval. Payment for drilling and anchoring will be incidental to related Contract items.
6. Dimensions and layout shown are based on available as-built drawings. Contractor shall field verify all dimensions prior to any related work.
7. All surfaces to be rehabilitated shall be clean of all debris and foreign material and shall be roughened to the 1/2" amplitude prior to placement of the new concrete. Payment shall be incidental to related concrete items.
8. Projecting reinforcing that can be maintained, in addition to that shown in the details, may be left in place at Contractor's discretion.
9. Cover abutment backwall, wingwall, and approach slab joints where waterstops are not required in accordance with Standard Details Section 502.

STATE OF MAINE
DEPARTMENT OF TRANSPORTATION
PROJECT NO.
2563106
WIN 25631.06
BRIDGE NO. 1447
BRIDGE PLANS

		BY	DATE
PROJ. MANAGER	J. BRASCH		
DESIGN-DETAILED	S. LINDSLEY	E. MORRISON	06-24
CHECKED-REVIEWED	D. WHITE	B. COLBURN	06-24
DESIGN2-DETAILED2	N. EDMAN	J. FITZ	06-24
DESIGN3-DETAILED3			
REVISIONS 1			
REVISIONS 2			
REVISIONS 3			
REVISIONS 4			
FIELD CHANGES			

SIGNATURE
P.E. NUMBER
DATE

I-95 SB OVER SOMERSET AVE
BRIDGE NO. 1447
PITTSFIELD SOMERSET COUNTY

ABUTMENT DEMOLITION (BR. NO. 1447)

SHEET NUMBER
22
OF 110

Filename: ...\0xx_Somerset_Br 1447_Abut Demo.dgn Division: Username: jfitzpatrick Date:6/10/2024

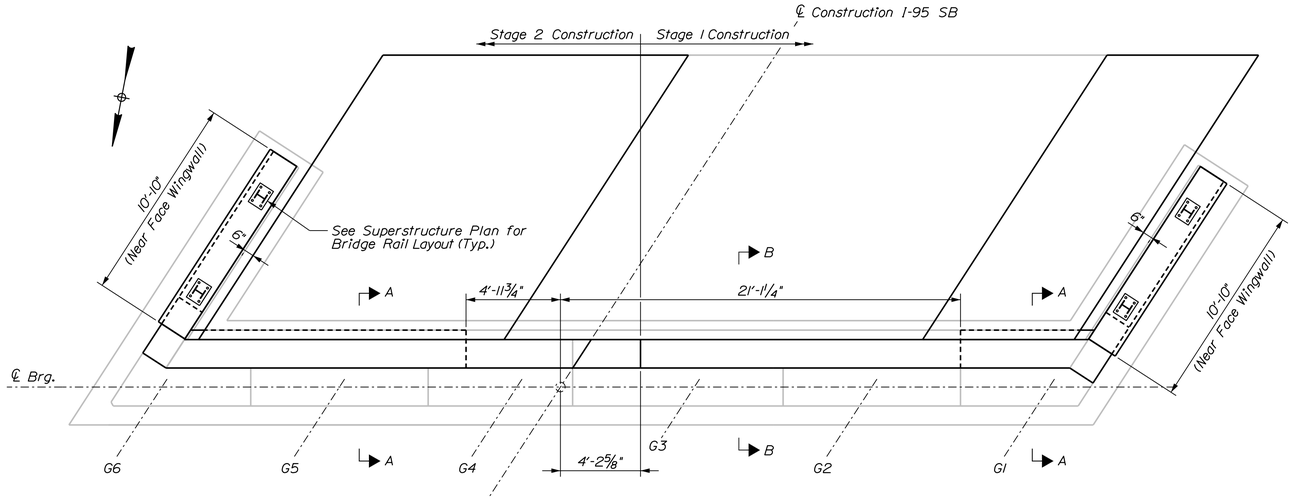

ABUTMENT 1 CONSTRUCTION PLAN

For Abutment Demo and Construction Sections, See Sheet 25

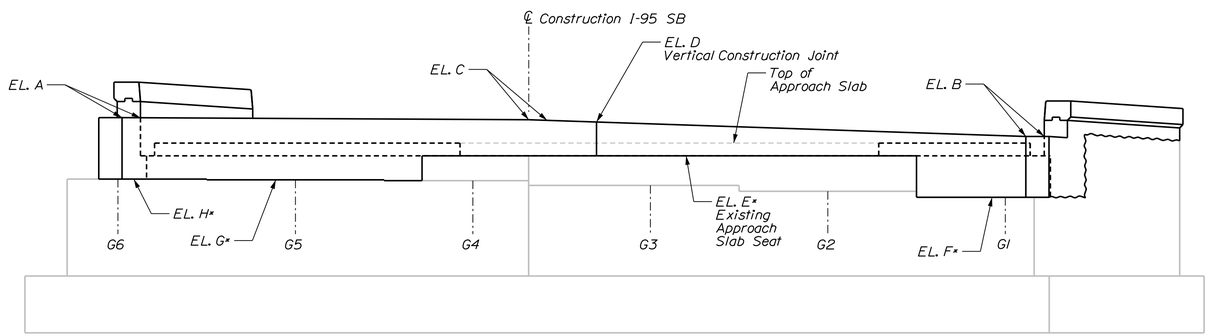

ABUTMENT 1 CONSTRUCTION ELEVATION

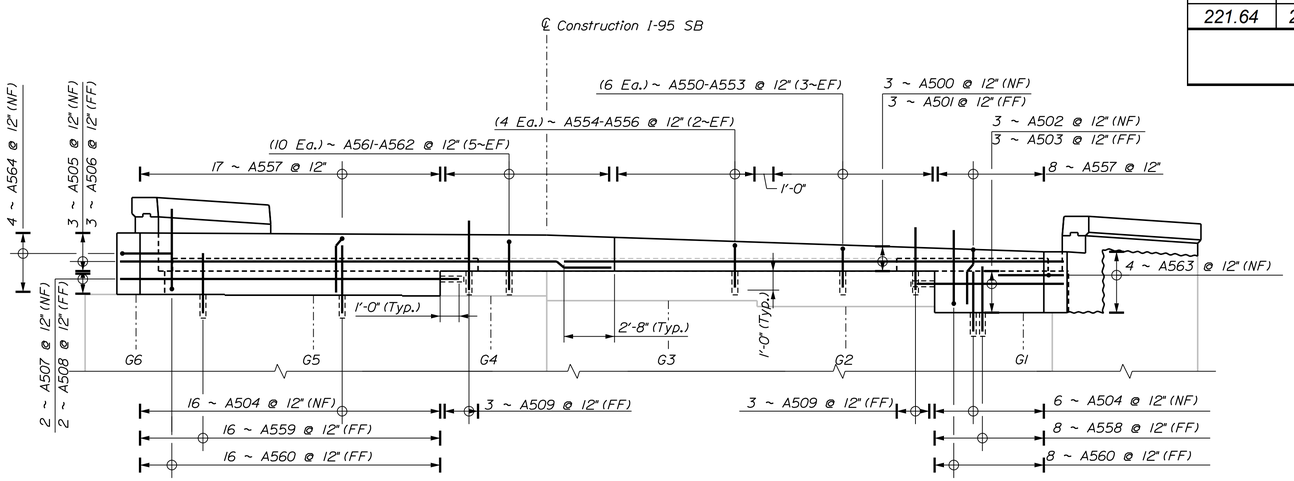

ABUTMENT 1 REINFORCEMENT ELEVATION

CONCRETE REPAIR NOTES

1. The quantity of concrete repairs and reinforcing layout on these drawings are based on visual inspection. The Contractor shall match those repair limits as closely as possible except with the approval of the Resident.
2. No repairs are anticipated for substructure units not shown. The Contractor and the Resident shall verify that no work is required.
3. The Department must approve changes in quantity beyond what is shown or assumed.
4. All broken or corroded reinforcing bars shall be supplemented in accordance with Standard Specification Section 518.04. Supplemental reinforcing shall maintain a clear cover of 2" minimum. Supplemental bars shall be paid for under Pay Items 503.19 and 503.20.

Bridge #1447 Abutment 1 Elevations											
EL. A		EL. B		EL. C		EL. D		EL. E*	EL. F*	EL. G*	EL. H*
NF	FF	NF	FF	NF	FF	NF	FF				
221.64	221.57	220.65	220.58	221.54	221.47	221.42	221.39	219.63	217.44	218.36	218.40

NF = Near Face FF= Far Face

* Elevations provided are approximated from the existing bridge plans. To be field verified.

STATE OF MAINE
DEPARTMENT OF TRANSPORTATION

PROJECT NO.
25631.06

WIN 25631.06

BRIDGE NO. 1447

BRIDGE PLANS

PROJ. MANAGER	J. BRASK	BY	DATE
DESIGN-DETAILED	S. LINDSLEY	E. MORRISON	06-24
CHECKED-REVIEWED	D. WHITE	B. COLBURN	06-24
DESIGN2-DETAILED2	N. EDMAN	J. FITZ	06-24
DESIGN3-DETAILED3			
REVISIONS 1			
REVISIONS 2			
REVISIONS 3			
REVISIONS 4			
FIELD CHANGES			

SIGNATURE

P.E. NUMBER

DATE

I-95 SB OVER SOMERSET AVE
BRIDGE NO. 1447
PITTSFIELD SOMERSET COUNTY

ABUTMENT 1 CONSTRUCTION
(BR. NO. 1447)

SHEET NUMBER
23
OF 110

Filename: ...\0xx_Somerset_Br 1447_Abut 1_Constr_Details.dgn
Division
Username: jfitzpatrick
Date:6/10/2024

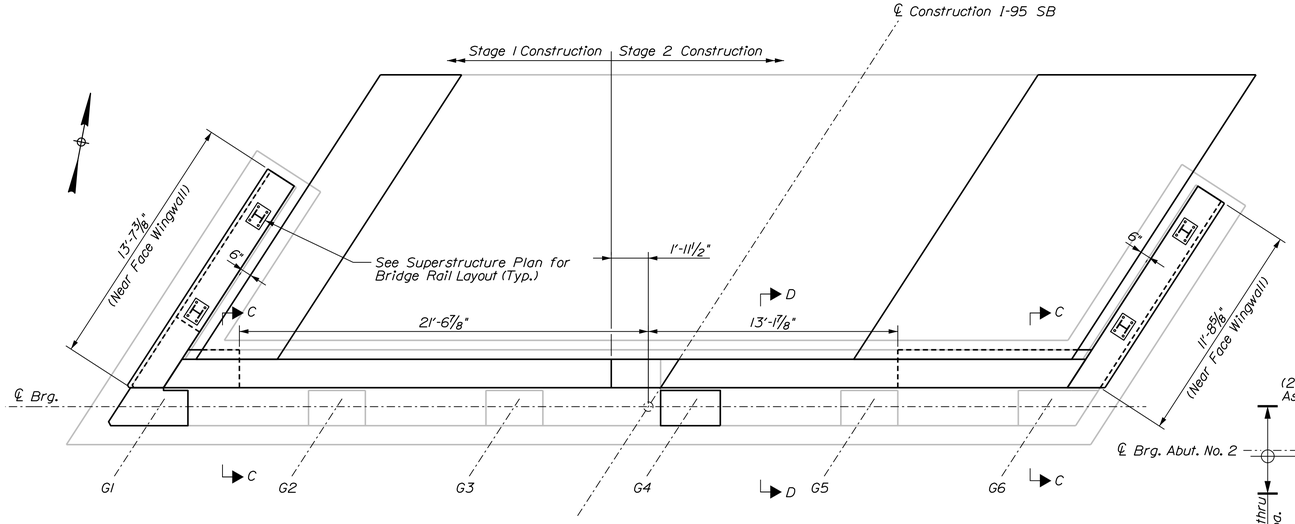

ABUTMENT 2 CONSTRUCTION PLAN

For Abutment Demo and Construction Sections, See Sheet 25

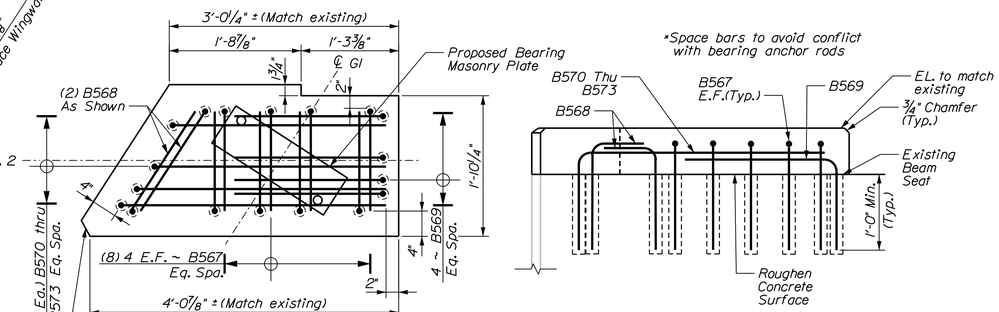

PEDESTAL G1 REINFORCING DETAIL

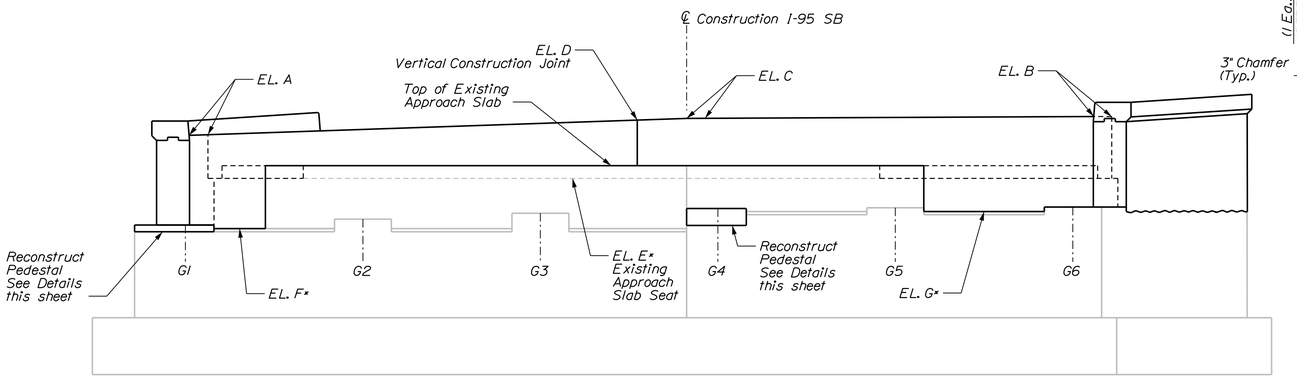

ABUTMENT 2 CONSTRUCTION ELEVATION

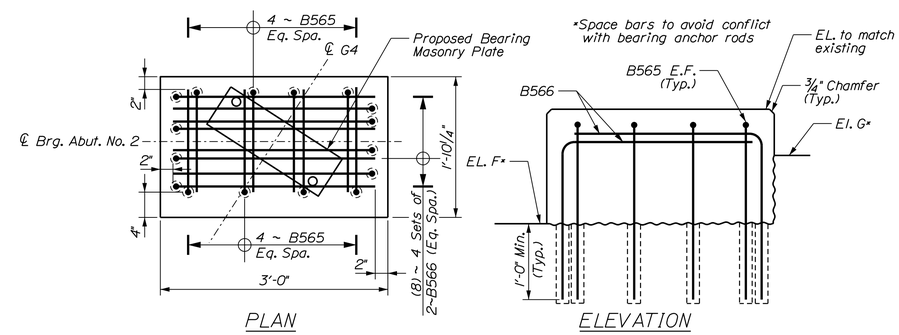

PEDESTAL G4 REINFORCING DETAIL

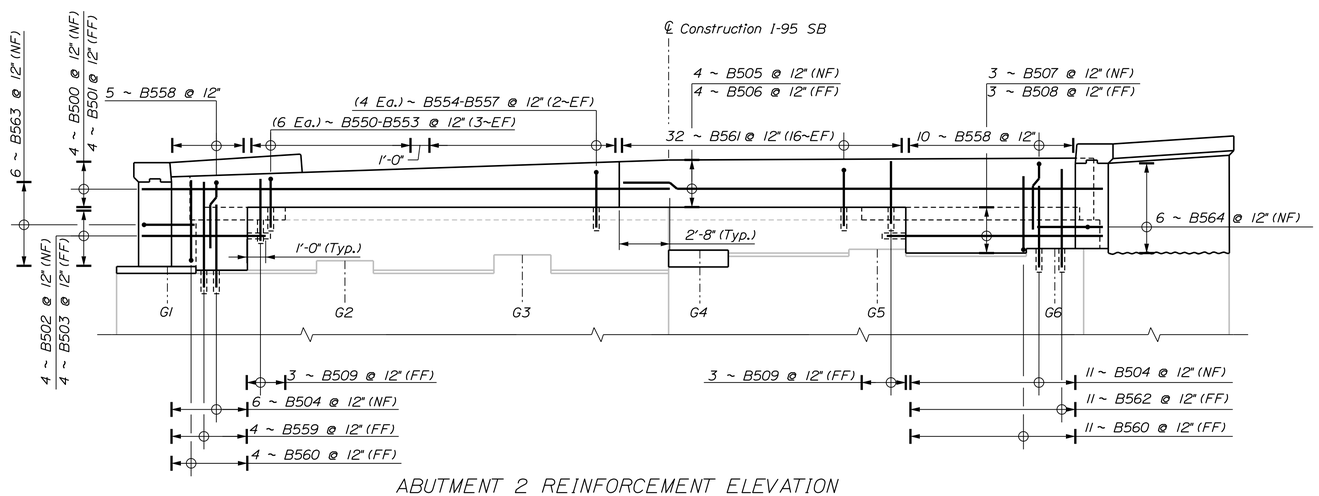

ABUTMENT 2 REINFORCEMENT ELEVATION

Bridge #1447 Abutment 2 Elevations										
EL. A		EL. B		EL. C		EL. D		EL. E*	EL. F*	EL. G*
NF	FF	NF	FF	NF	FF	NF	FF			
226.91	226.98	227.90	227.96	227.80	227.87	227.71	227.74	224.64	221.99	222.89

NF = Near Face FF= Far Face

* Elevations provided are approximated from the existing bridge plans. To be field verified.

STATE OF MAINE
DEPARTMENT OF TRANSPORTATION

PROJECT NO. 2563106

WIN 25631.06

BRIDGE NO. 1447

BRIDGE PLANS

		BY	DATE
PROJ. MANAGER	J. BRASK		
DESIGN-DETAILED	S. LINDSLEY	E. MORRISON	06-24
CHECKED-REVIEWED	D. WHITE	B. COLBURN	06-24
DESIGN2-DETAILED2	N. EDMAN	J. FITZ	06-24
DESIGN3-DETAILED3			
REVISIONS 1			
REVISIONS 2			
REVISIONS 3			
REVISIONS 4			
FIELD CHANGES			

SIGNATURE

P.E. NUMBER

DATE

I-95 SB OVER SOMERSET AVE
BRIDGE NO. 1447

PITTSFIELD SOMERSET COUNTY

ABUTMENT 2 CONSTRUCTION
(BR. NO. 1447)

SHEET NUMBER

24

OF 110

Filename: ...\0xx_Somerset_Br 1447_Abut 2_Construction.dgn Username: jfitzpatrick Date:6/10/2024

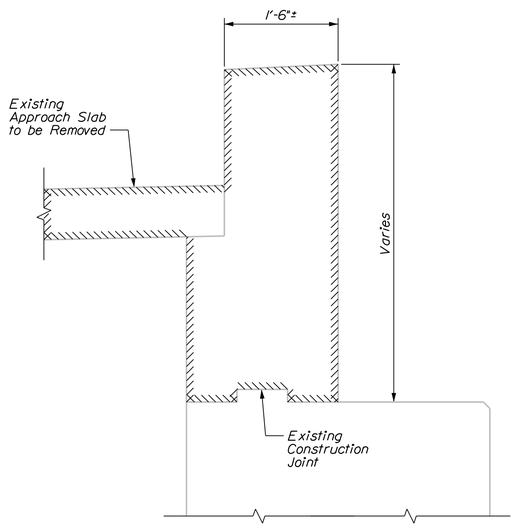

ABUTMENT 1 DEMOLITION SECTION
(SECTION A-A)

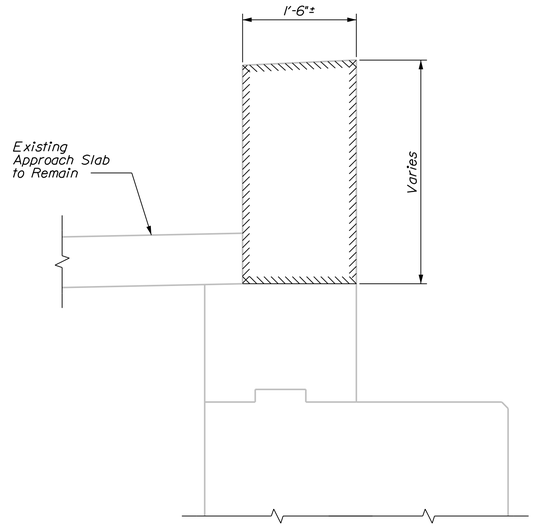

ABUTMENT 1 DEMOLITION SECTION
(SECTION B-B)

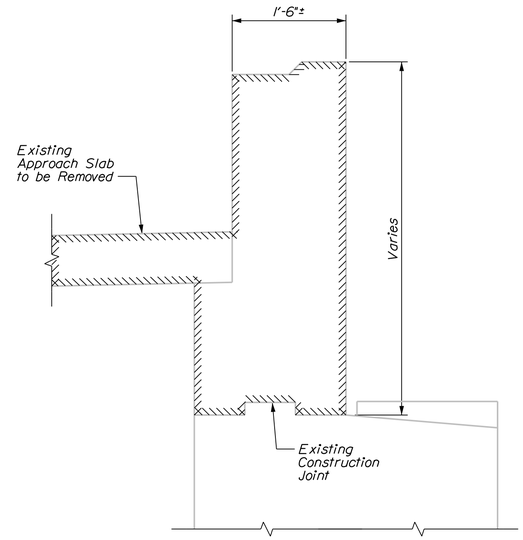

ABUTMENT 2 DEMOLITION SECTION
(SECTION C-C)

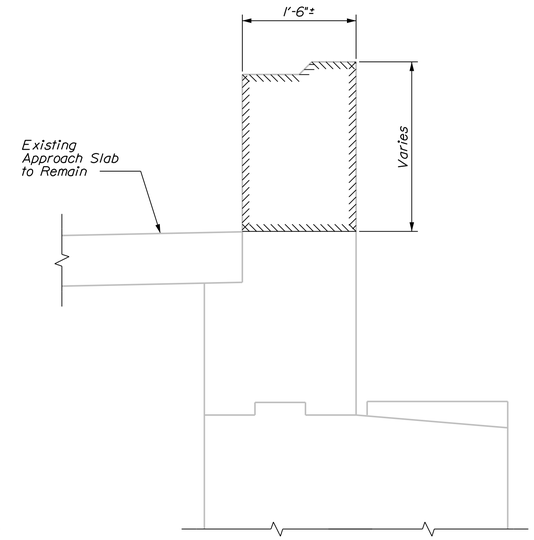

ABUTMENT 2 DEMOLITION SECTION
(SECTION D-D)

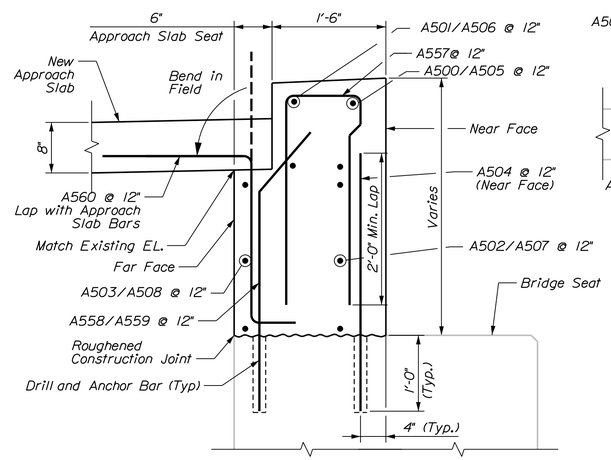

ABUTMENT 1 CONSTRUCTION SECTION
(SECTION A-A)

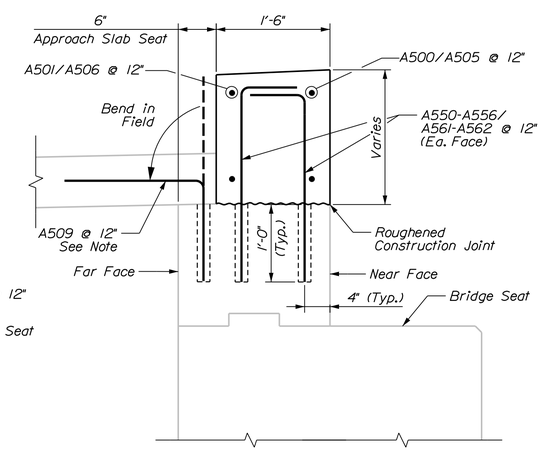

ABUTMENT 1 CONSTRUCTION SECTION
(SECTION B-B)

Note: Bar A509 shall be installed in existing approach slab seat at locations with partial height backwall replacement with new approach slabs. Lap with Approach Slab bars

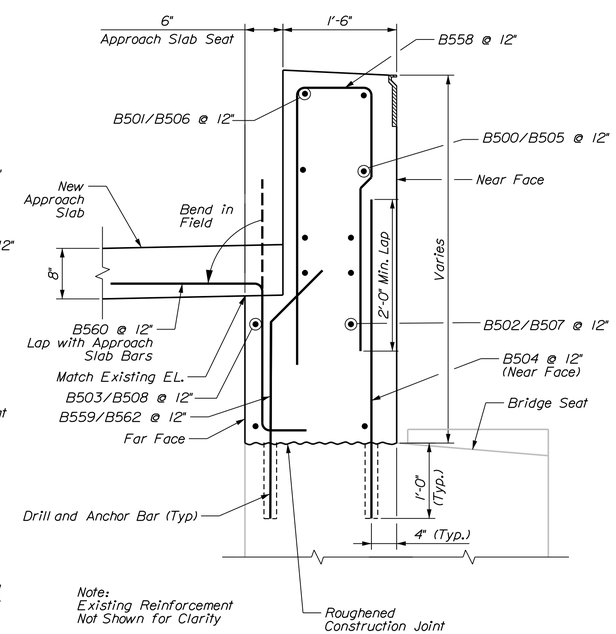

Note:
Existing Reinforcement Not Shown for Clarity

ABUTMENT 2 CONSTRUCTION SECTION
(SECTION C-C)

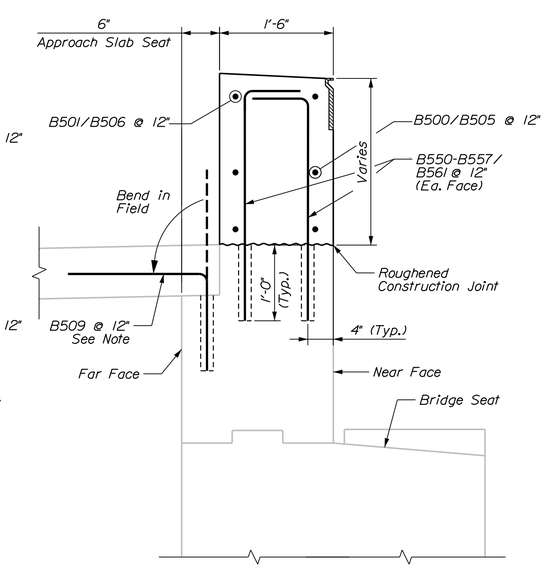

ABUTMENT 2 CONSTRUCTION SECTION
(SECTION D-D)

Note: Bar B509 shall be installed in existing approach slab seat at locations with partial height backwall replacement with new approach slabs. Lap with Approach Slab bars

STATE OF MAINE
DEPARTMENT OF TRANSPORTATION

PROJECT NO.
25631.06

WIN 25631.06

BRIDGE NO. 1447

BRIDGE PLANS

PROJ. MANAGER	J. BRASK	BY	DATE
DESIGN-DETAILED	S. LINDSLEY	E. MORRISON	06-24
CHECKED-REVIEWED	D. WHITE	B. COLBURN	06-24
DESIGN2-DETAILED2	N. EDMAN	J. FITZ	06-24
DESIGN3-DETAILED3			
REVISIONS 1			
REVISIONS 2			
REVISIONS 3			
REVISIONS 4			
FIELD CHANGES			

SIGNATURE

P.E. NUMBER

DATE

I-95 SB OVER SOMERSET AVE
BRIDGE NO. 1447

PITTSFIELD SOMERSET COUNTY

ABUTMENT SECTIONS
(BR. NO. 1447)

SHEET NUMBER
25
OF 110

Filename: ...\Oxx_Somerset_Br 1447_Abut_Sections.Dgn Division: Username: jfitzpatrick Date:6/10/2024

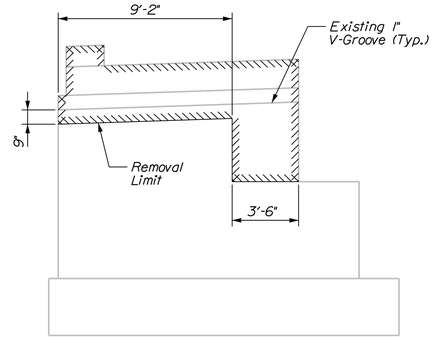

ABUTMENT 1 RIGHT WINGWALL DEMOLITION ELEVATION

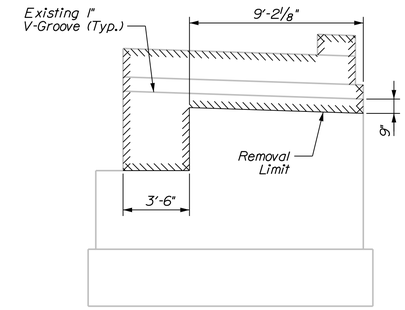

ABUTMENT 1 LEFT WINGWALL DEMOLITION ELEVATION

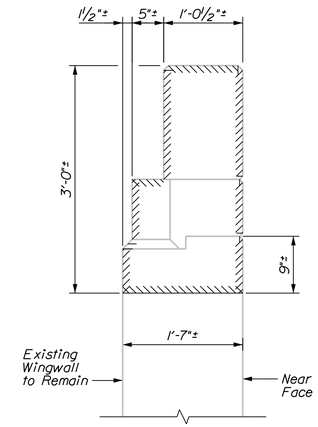

WINGWALL DEMOLITION SECTION

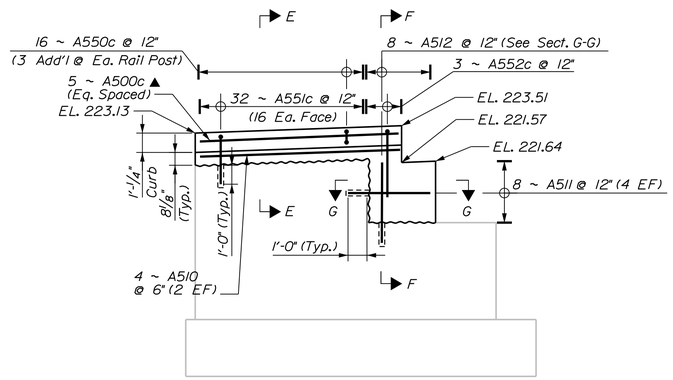

ABUTMENT 1 RIGHT WINGWALL CONSTRUCTION ELEVATION

(See Superstructure Plan for Bridge Rail Layout)
See Sheet 27 for Section F-F

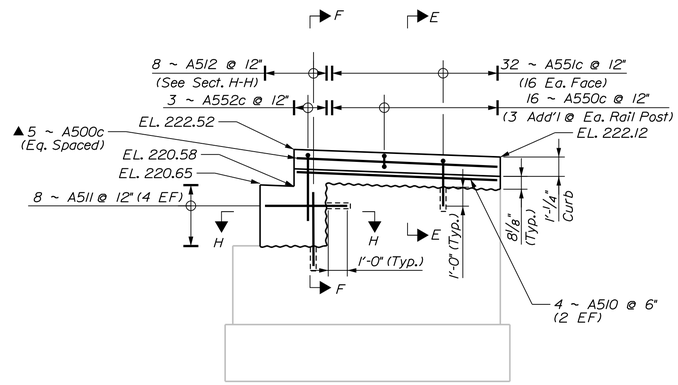

ABUTMENT 1 LEFT WINGWALL CONSTRUCTION ELEVATION

(See Superstructure Plan for Bridge Rail Layout)
See Sheet 27 for Section F-F

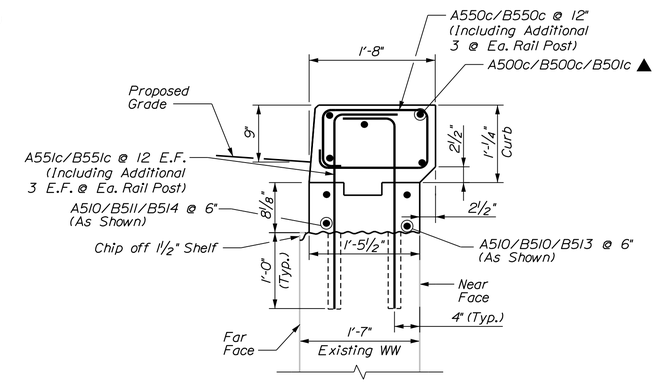

WINGWALL CONSTRUCTION SECTION
(SECTION E-E)

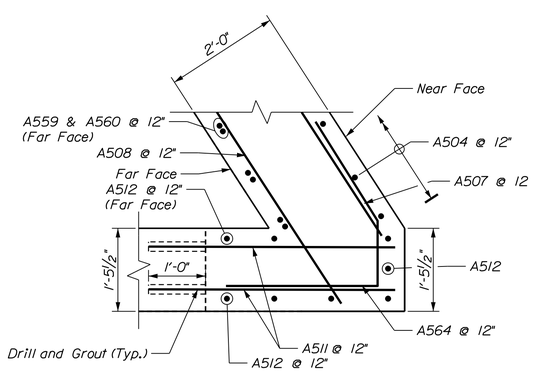

SECTION G-G

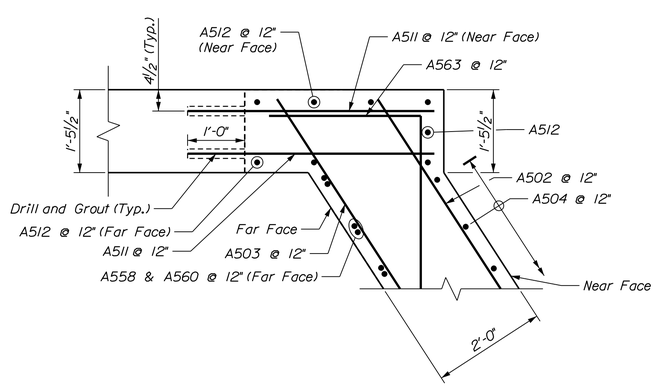

SECTION H-H

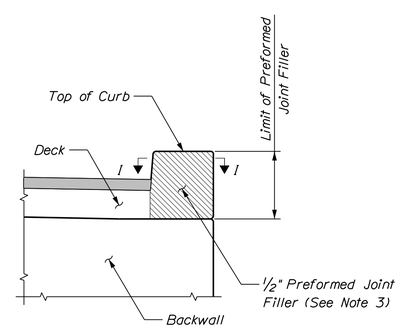

CURB JOINT DETAIL

At Abutment 1 Only.

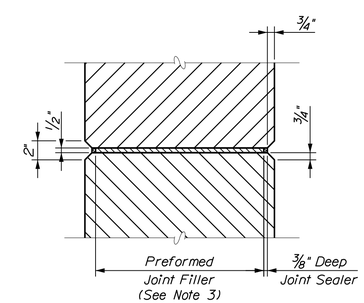

SECTION I-I

CURB JOINT NOTES

1. Construction of joints, including joint filler, shall be incidental to the related structural concrete pay item.
2. Preformed joint filler shall conform to ASTM designation D1752, Type 1 or ASTM D5249, Type 2. Preformed joint filler shall be a non staining, non bleeding type. Cork is not an acceptable joint filler material.
3. Joint sealer shall conform with subsection 714.04 of the specifications and shall be incidental to the related pay items.

LEGEND

▲ Bars to be Cut in Field

STATE OF MAINE
DEPARTMENT OF TRANSPORTATION
PROJECT NO. 25631.06
WIN 25631.06
BRIDGE NO. 1447
BRIDGE PLANS

PROJ. MANAGER	J. BRASK	BY	DATE
DESIGN-DETAILED	S. LINDSLEY	E. MORRISON	06-24
CHECKED-REVIEWED	D. WHITE	B. COLBURN	06-24
DESIGN2-DETAILED2	N. EDMAN	J. FITZ	06-24
DESIGN3-DETAILED3			
REVISIONS 1			
REVISIONS 2			
REVISIONS 3			
REVISIONS 4			
FIELD CHANGES			

SIGNATURE

P.E. NUMBER

DATE

I-95 SB OVER SOMERSET AVE
BRIDGE NO. 1447
PITTSFIELD SOMERSET COUNTY

WINGWALL MODIFICATIONS
(BR. NO. 1447)

SHEET NUMBER
26
OF 110

Filename: ...\0xx_Somerset_Br 1447_Wingwall_Modifications 1.dgn
Username: jfitzpatrick
Date:6/10/2024

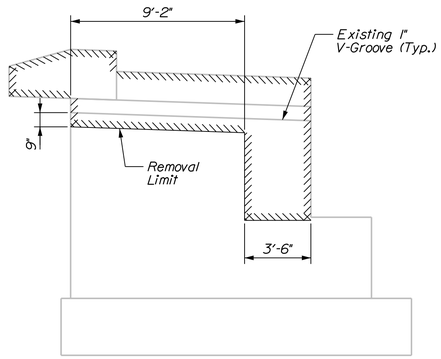

ABUTMENT 2 LEFT WINGWALL DEMOLITION ELEVATION

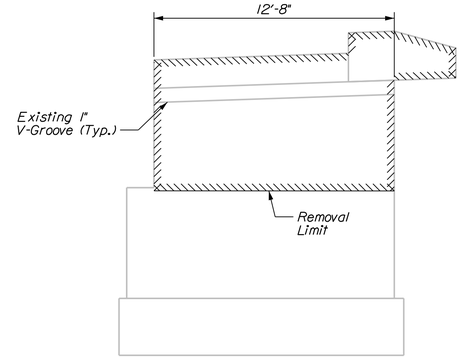

ABUTMENT 2 RIGHT WINGWALL DEMOLITION ELEVATION

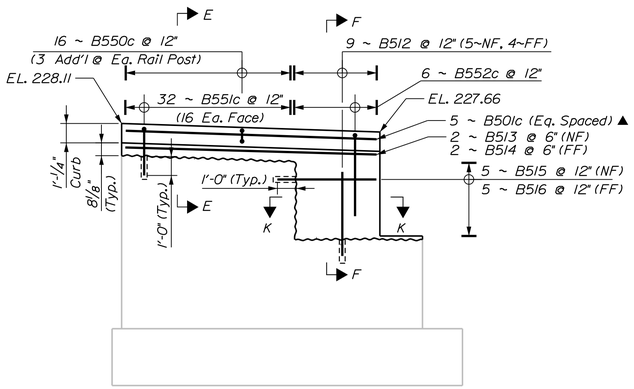

ABUTMENT 2 LEFT WINGWALL CONSTRUCTION ELEVATION

(See Superstructure Plan for Bridge Rail Layout)
See Sheet 26 for Section E-E

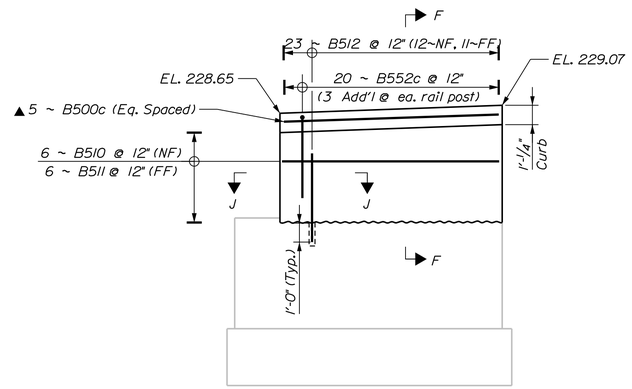

ABUTMENT 2 RIGHT WINGWALL CONSTRUCTION ELEVATION

(See Superstructure Plan for Bridge Rail Layout)

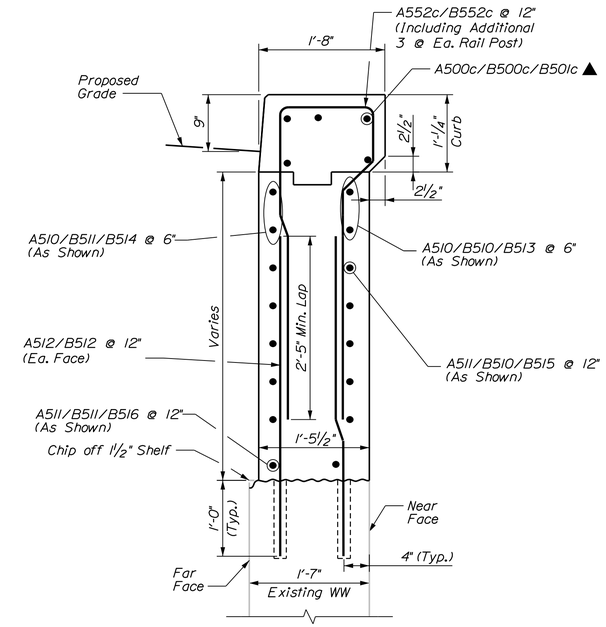

WINGWALL CONSTRUCTION SECTION
(SECTION F-F)

LEGEND

▲ Bars to be Cut in Field

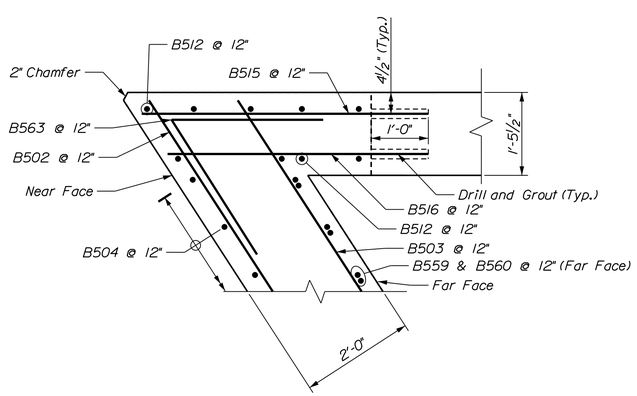

SECTION K-K

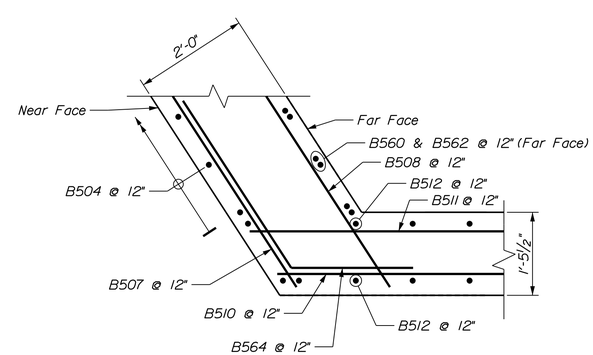

SECTION J-J

STATE OF MAINE
DEPARTMENT OF TRANSPORTATION

PROJECT NO.
25631.06
WIN 25631.06

BRIDGE NO. 1447

BRIDGE PLANS

PROJ. MANAGER	J. BRASK	BY	DATE
DESIGN-DETAILED	S. LINDSLEY	E. MORRISON	06-24
CHECKED-REVIEWED	D. WHITE	B. COLBURN	06-24
DESIGN2-DETAILED2	N. EDMAN	J. FITZ	06-24
DESIGN3-DETAILED3			
REVISIONS 1			
REVISIONS 2			
REVISIONS 3			
REVISIONS 4			
FIELD CHANGES			

SIGNATURE

P.E. NUMBER

DATE

I-95 SB OVER SOMERSET AVE
BRIDGE NO. 1447
PITTSFIELD SOMERSET COUNTY

WINGWALL MODIFICATIONS
(BR. NO. 1447)

SHEET NUMBER
27
OF 110

Filename: ...\0xx_Somerset_Br 1447_Wingwall_Modifications 2.dgn Username: jfitzpatrick Date:6/10/2024

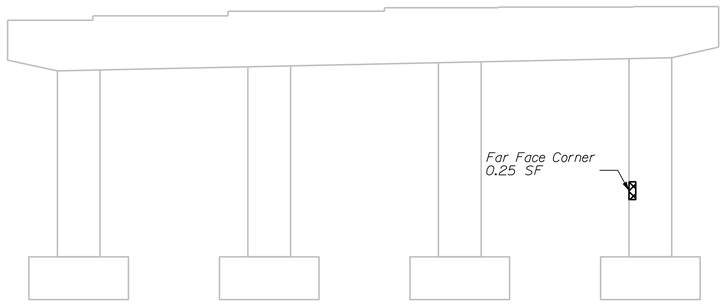

PIER 1

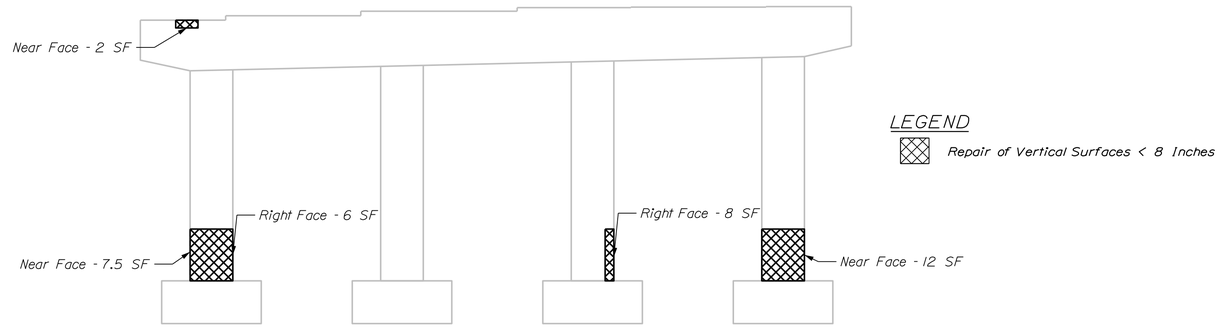

PIER 2

STATE OF MAINE
DEPARTMENT OF TRANSPORTATION

PROJECT NO.
2563106

WIN 25631.06

BRIDGE NO. 1447

BRIDGE PLANS

PROJ. MANAGER	J. BRASK	BY	DATE
DESIGN-DETAILED	S. LINDSLEY	E. MORRISON	06-24
CHECKED-REVIEWED	D. WHITE	B. COLBURN	06-24
DESIGN2-DETAILED2	N. EDMAN	J. FITZ	06-24
DESIGN3-DETAILED3			
REVISIONS 1			
REVISIONS 2			
REVISIONS 3			
REVISIONS 4			
FIELD CHANGES			

SIGNATURE

P.E. NUMBER

DATE

I-95 SB OVER SOMERSET AVENUE
BRIDGE NO. 1447

PITTSFIELD SOMERSET COUNTY

PIER REPAIRS
(BR. NO. 1447)

SHEET NUMBER
28
OF 110

Filename: ...\0xx_Somerset_Br 1447_Pier_Repairs.dgn Division: Username: jfitzpatrick Date:6/10/2024

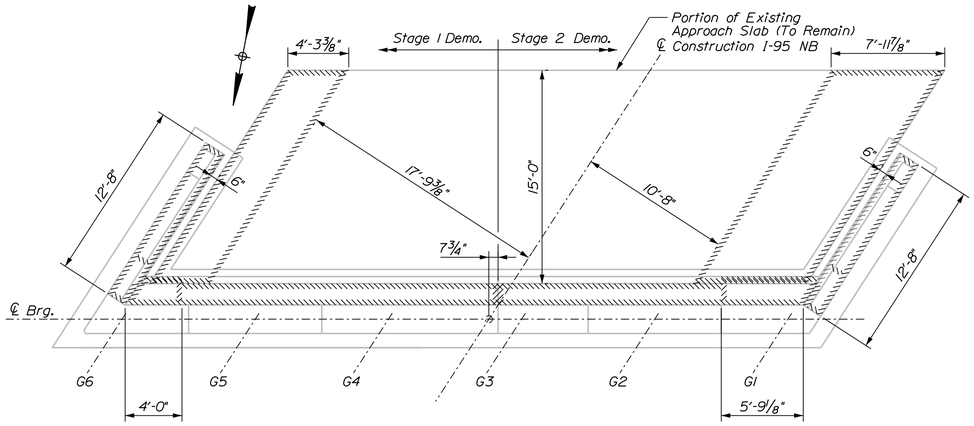

ABUTMENT 1 DEMOLITION PLAN

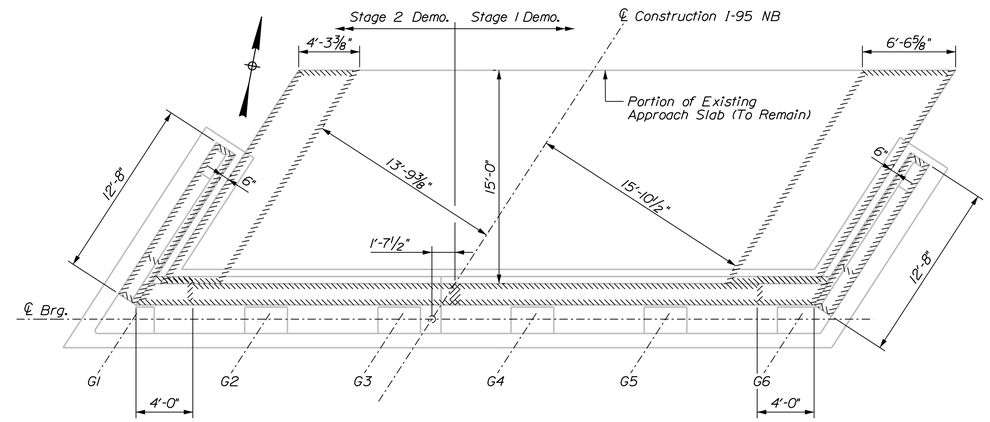

ABUTMENT 2 DEMOLITION PLAN

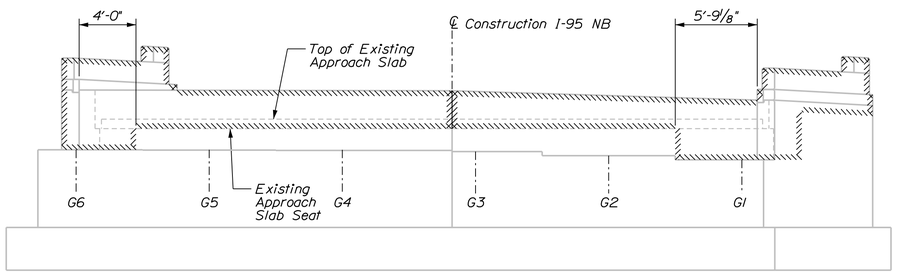

ABUTMENT 1 DEMOLITION ELEVATION

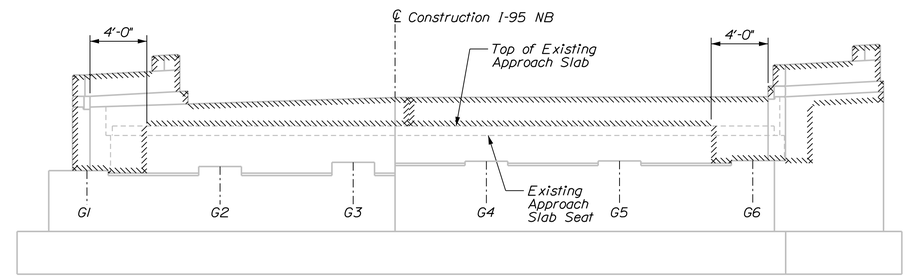

ABUTMENT 2 DEMOLITION ELEVATION

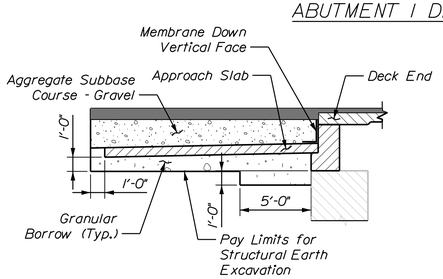

ABUTMENT 1
FULL HEIGHT BACKWALL REPLACMENT
BACKFILL DETAIL

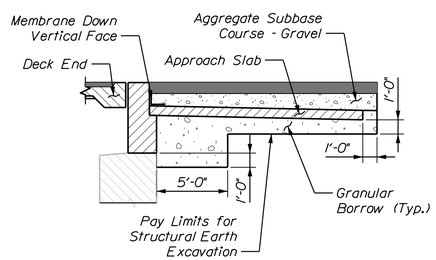

ABUTMENT 2
FULL HEIGHT BACKWALL REPLACMENT
BACKFILL DETAIL

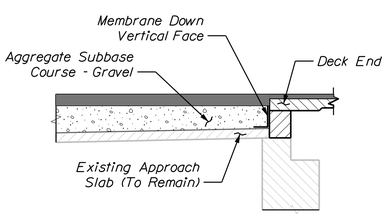

ABUTMENT 1
PARTIAL HEIGHT BACKWALL REPLACMENT
BACKFILL DETAIL

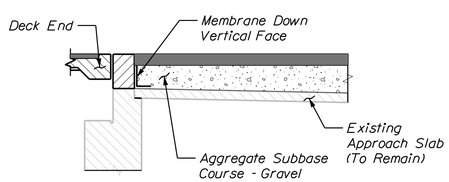

ABUTMENT 2
PARTIAL HEIGHT BACKWALL REPLACMENT
BACKFILL DETAIL

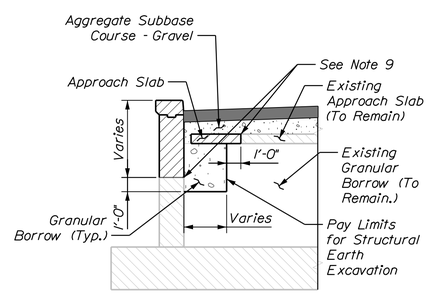

WINGWALL EARTHWORK DETAIL

Abutment 2 Shown, Abutment 1 Similar

ABUTMENT AND WINGWALL MODIFICATION NOTES

1. The Contractor shall use care not to damage any existing reinforcing steel which is to remain. Any damaged reinforcing steel shall be replaced as directed by the Resident at no expense to the Department.
2. Before drilling and grouting new reinforcing steel, the Contractor shall locate reinforcing steel in existing concrete by non-destructive methods to avoid conflicts. All costs associated with this work shall be incidental to related Contract Items.
3. Reinforcing steel shall have 2 inches cover unless otherwise noted.
4. Existing abutment and wingwall concrete to be removed as shown on the plans shall be sawcut 1 inch deep prior to removal of existing concrete. All costs associated with this work shall be incidental to related Contract items.
5. Where drilling and anchoring of reinforcement is required, the Contractor shall use a material listed on the Maine Department of Transportation Qualified Products List of Concrete Adhesive Anchor Systems. The depth of embedment shall be sufficient to develop 125% of the yield strength of the bar per the manufacturer's recommendations or 12 inches, whichever is greater. Proposed anchoring material and embedment depth shall be submitted for approval. Payment for drilling and anchoring will be incidental to related Contract items.
6. Dimensions and layout shown are based on available as-built drawings. Contractor shall field verify all dimensions prior to any related work.
7. All surfaces to be rehabilitated shall be clean of all debris and foreign material and shall be roughened to the 1/2" amplitude prior to placement of the new concrete. Payment shall be incidental to related concrete items.
8. Projecting reinforcing that can be maintained, in addition to that shown in the details, may be left in place at Contractor's discretion.
9. Cover abutment backwall, wingwall, and approach slab joints where waterstops are not required in accordance with Standard Details Section 502.

STATE OF MAINE
DEPARTMENT OF TRANSPORTATION
PROJECT NO.
2563106
WIN 25631.07
BRIDGE NO. 5985
BRIDGE PLANS

		BY	DATE
PROJ. MANAGER	J. BRASH		
DESIGN-DETAILED	S. LINDSLEY	E. MORRISON	06-24
CHECKED-REVIEWED	D. WHITE	B. COLBURN	06-24
DESIGN2-DETAILED2	N. EDMAN	J. FITZ	06-24
DESIGN3-DETAILED3			
REVISIONS 1			
REVISIONS 2			
REVISIONS 3			
REVISIONS 4			
FIELD CHANGES			

SIGNATURE

P.E. NUMBER

DATE

I-95 NB OVER SOMERSET AVE
BRIDGE NO. 5985
PITTSFIELD SOMERSET COUNTY

ABUTMENT DEMOLITION (BR. NO. 5985)

SHEET NUMBER
29
OF 110

Filename: ...\0xx_Somerset_Br 5985_Abut Demo.dgn Division: Username: jfitzpatrick Date:6/10/2024

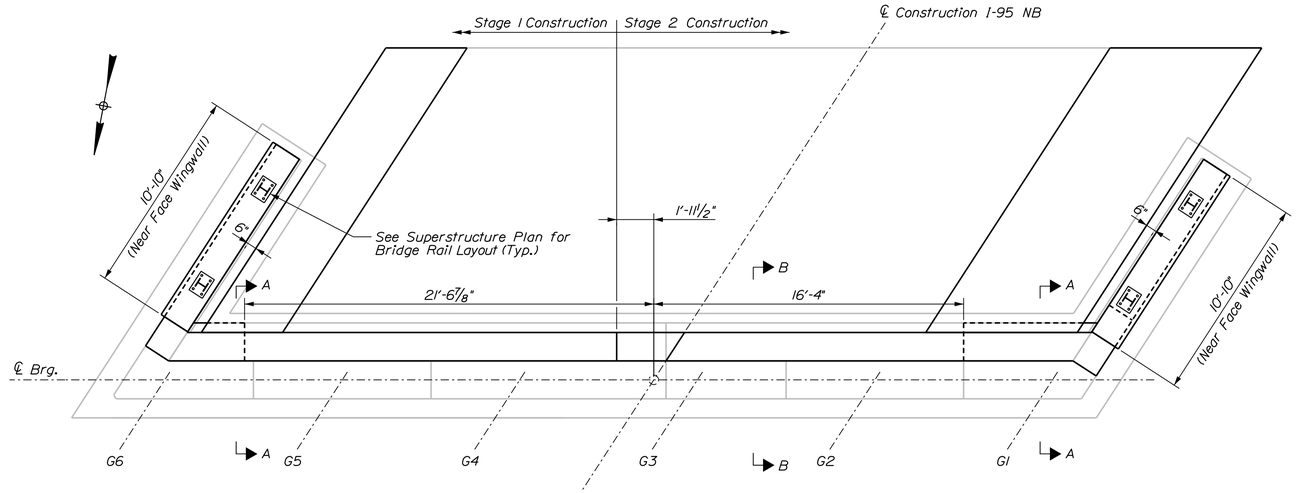

ABUTMENT 1 CONSTRUCTION PLAN

For Abutment Demo and Construction Sections, See Sheet 32

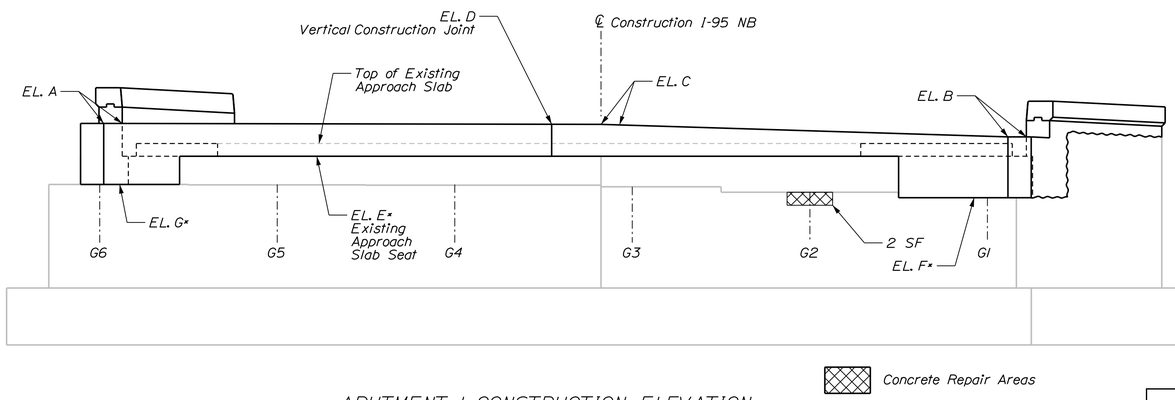

ABUTMENT 1 CONSTRUCTION ELEVATION

CONCRETE REPAIR NOTES

1. The quantity of concrete repairs and reinforcing layout on these drawings are based on visual inspection. The Contractor shall match those repair limits as closely as possible except with the approval of the Resident.
2. No repairs are anticipated for substructure units not shown. The Contractor and the Resident shall verify that no work is required.
3. The Department must approve changes in quantity beyond what is shown or assumed.
4. All broken or corroded reinforcing bars shall be supplemented in accordance with Standard Specification Section 518.04. Supplemental reinforcing shall maintain a clear cover of 2" minimum. Supplemental bars shall be paid for under Pay Items 503.19 and 503.20.

Bridge #5985 Abutment 1 Elevations										
EL. A		EL. B		EL. C		EL. D		EL. E*	EL. F*	EL. G*
NF	FF	NF	FF	NF	FF	NF	FF			
226.97	226.92	226.26	226.21	226.93	226.87	226.93	226.88	225.24	223.05	223.75

NF = Near Face FF= Far Face

* Elevations provided are approximated from the existing bridge plans. To be field verified.

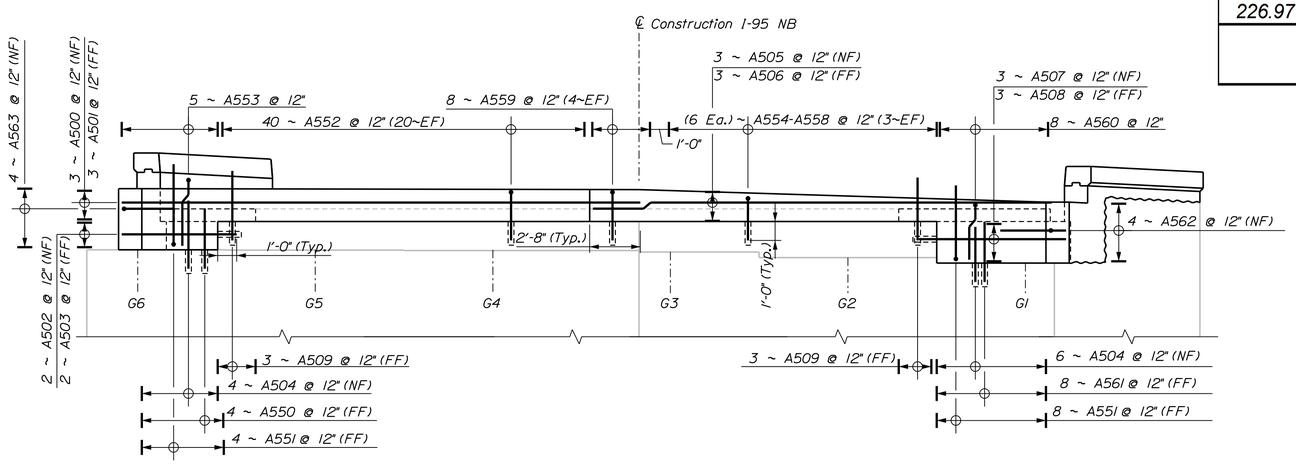

ABUTMENT 1 REINFORCEMENT ELEVATION

STATE OF MAINE
DEPARTMENT OF TRANSPORTATION

PROJECT NO. 25631.06

WIN 25631.07

BRIDGE NO. 5985

BRIDGE PLANS

PROJ. MANAGER	J. BRASK	BY	DATE
DESIGN-DETAILED	S. LINDSLEY	E. MORRISON	06-24
CHECKED-REVIEWED	D. WHITE	B. COLBURN	06-24
DESIGN2-DETAILED2	N. EDMAN	J. FITZ	06-24
DESIGN3-DETAILED3			
REVISIONS 1			
REVISIONS 2			
REVISIONS 3			
REVISIONS 4			
FIELD CHANGES			

SIGNATURE

P.E. NUMBER

DATE

I-95 NB OVER SOMERSET AVE
BRIDGE NO. 5985
PITTSFIELD SOMERSET COUNTY

ABUTMENT 1 CONSTRUCTION
(BR. NO. 5985)

SHEET NUMBER
30
OF 110

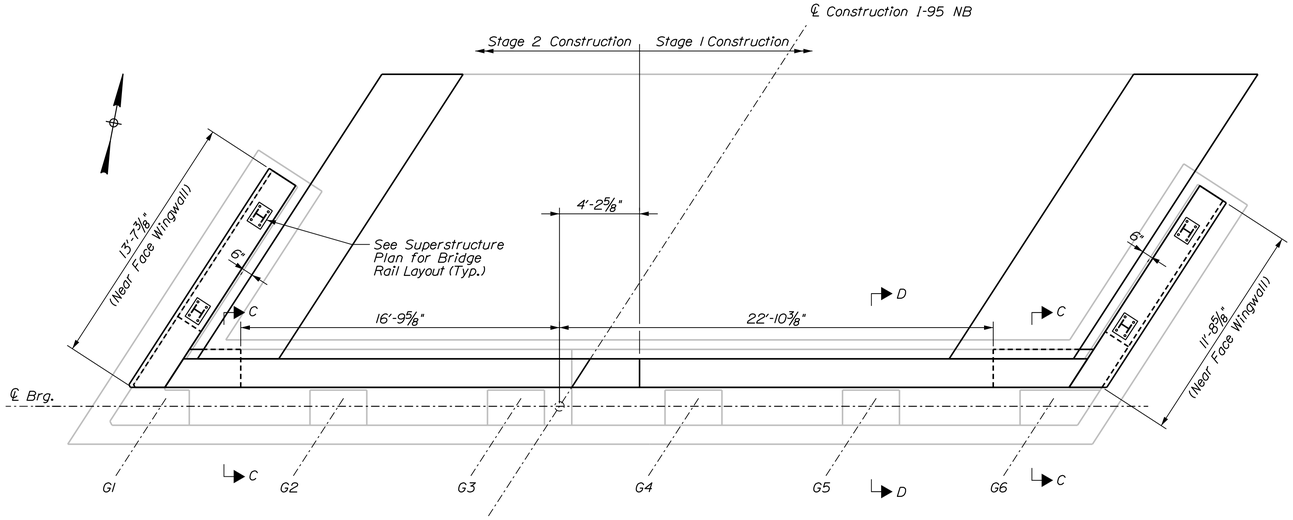

ABUTMENT 2 CONSTRUCTION PLAN

For Abutment Demo and Construction Sections, See Sheet 32

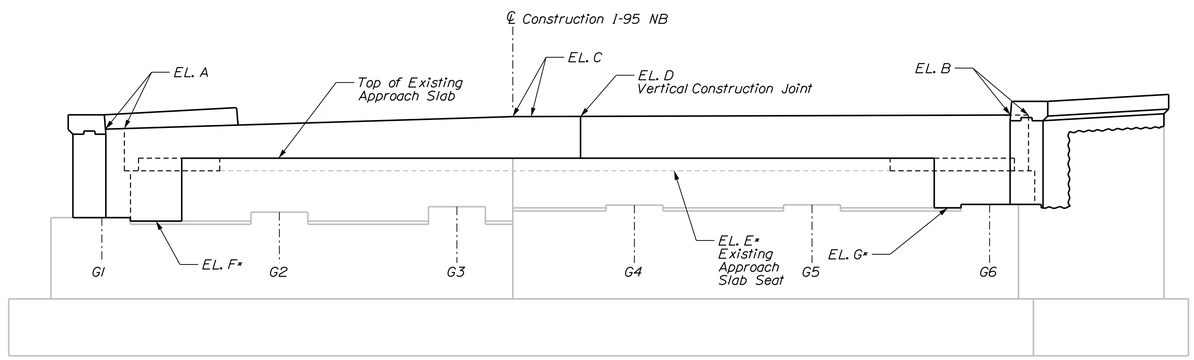

ABUTMENT 2 CONSTRUCTION ELEVATION

Bridge #5985 Abutment 2 Elevations										
EL. A		EL. B		EL. C		EL. D		EL. E*	EL. F*	EL. G*
NF	FF	NF	FF	NF	FF	NF	FF			
231.74	231.80	232.49	232.54	232.41	232.46	232.41	232.46	229.54	226.89	227.59

NF = Near Face FF= Far Face

* Elevations provided are approximated from the existing bridge plans. To be field verified.

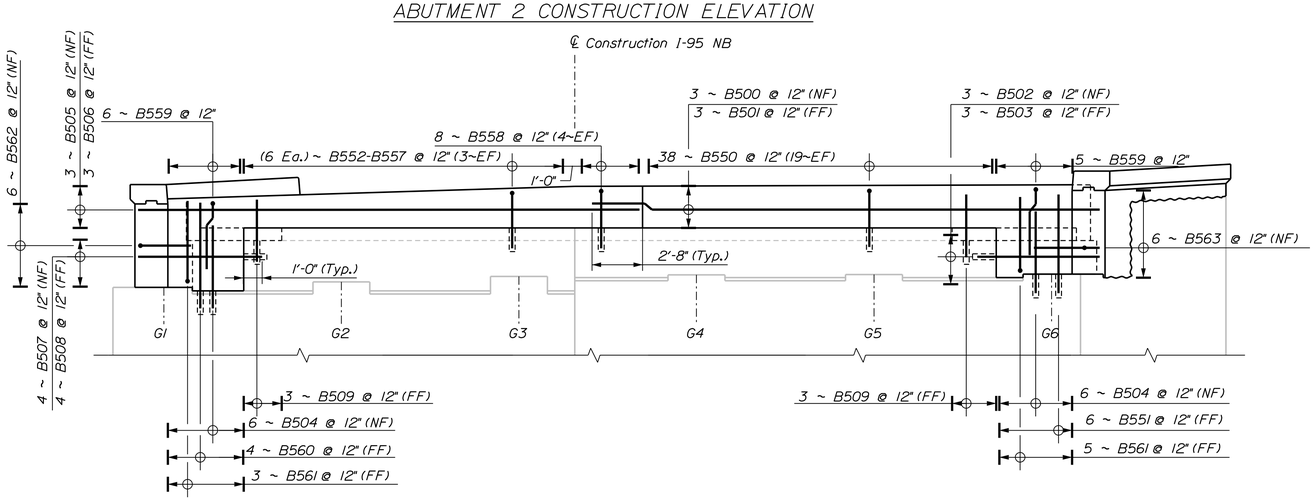

ABUTMENT 2 REINFORCEMENT ELEVATION

STATE OF MAINE
DEPARTMENT OF TRANSPORTATION

PROJECT NO.
25631.06

WIN 25631.07

BRIDGE NO. 5985

BRIDGE PLANS

PROJ. MANAGER	J. BRASCH	BY	DATE
DESIGN-DETAILED	S. LINDSLEY	E. MORRISON	06-24
CHECKED-REVIEWED	D. WHITE	B. COLBURN	06-24
DESIGN2-DETAILED2	N. EDMAN	J. FITZ	06-24
DESIGN3-DETAILED3			
REVISIONS 1			
REVISIONS 2			
REVISIONS 3			
REVISIONS 4			
FIELD CHANGES			

SIGNATURE

P.E. NUMBER

DATE

I-95 NB OVER SOMERSET AVE
BRIDGE NO. 5985

PITTSFIELD SOMERSET COUNTY

ABUTMENT 2 CONSTRUCTION
(BR. NO. 5985)

SHEET NUMBER

31

OF 110

Filename: ...\0xx_Somerset_Br 5985_Abut 2_Construction.dgn

Username: jfitzpatrick

Date:6/10/2024

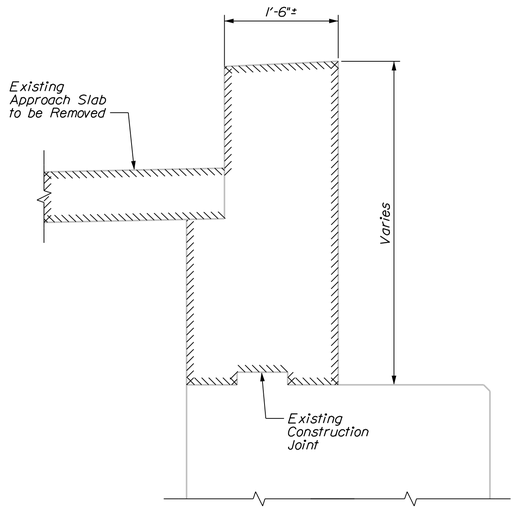

ABUTMENT 1 DEMOLITION SECTION
(SECTION A-A)

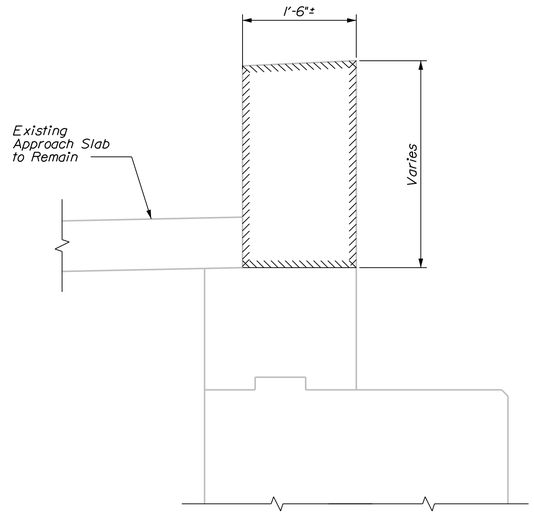

ABUTMENT 1 DEMOLITION SECTION
(SECTION B-B)

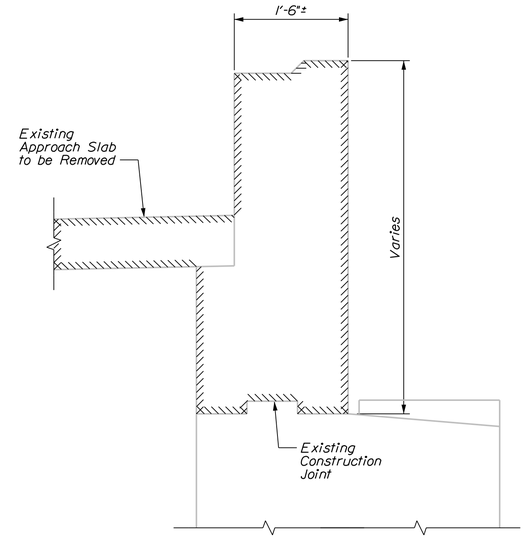

ABUTMENT 2 DEMOLITION SECTION
(SECTION C-C)

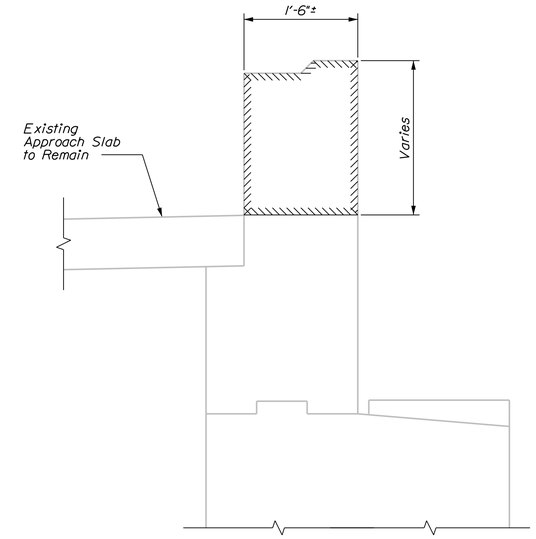

ABUTMENT 2 DEMOLITION SECTION
(SECTION D-D)

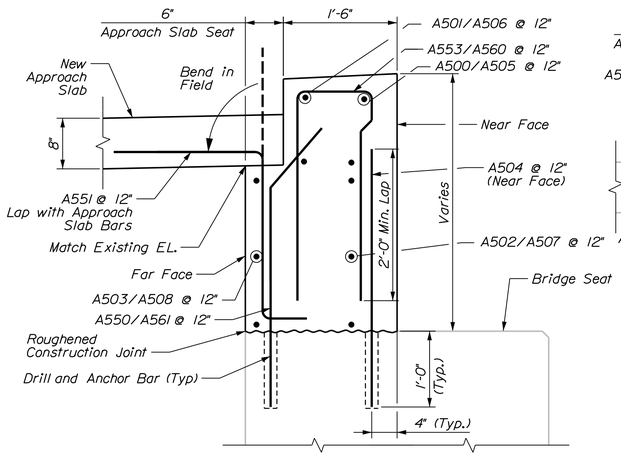

ABUTMENT 1 CONSTRUCTION SECTION
(SECTION A-A)

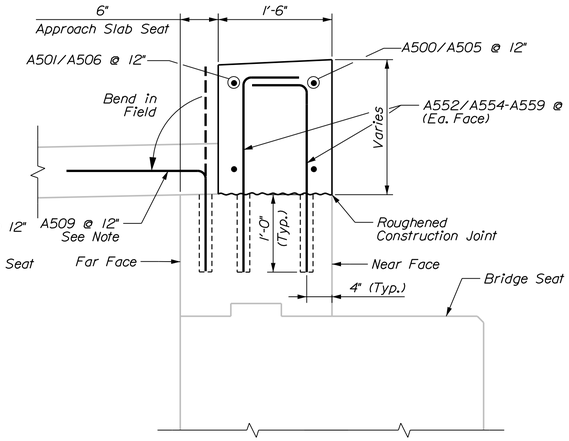

ABUTMENT 1 CONSTRUCTION SECTION
(SECTION B-B)

Note: Bar A509 shall be installed in existing approach slab seat at locations with partial height backwall replacement with new approach slabs. Lap with Approach Slab bars

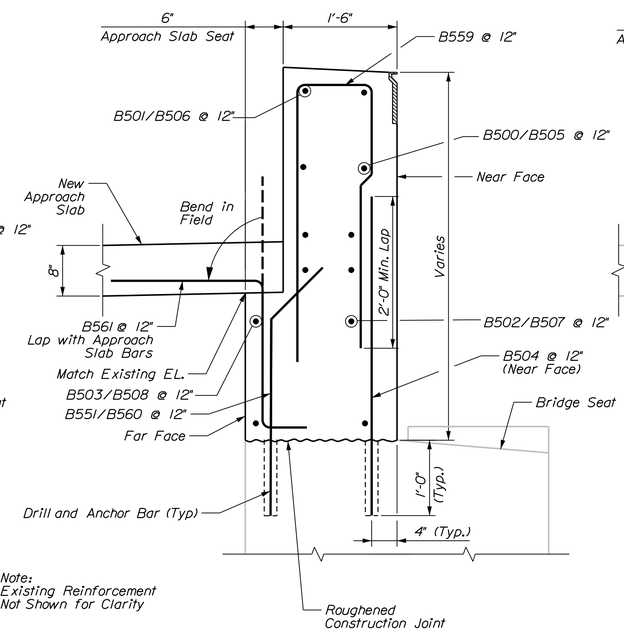

Note:
Existing Reinforcement Not Shown for Clarity

ABUTMENT 2 CONSTRUCTION SECTION
(SECTION C-C)

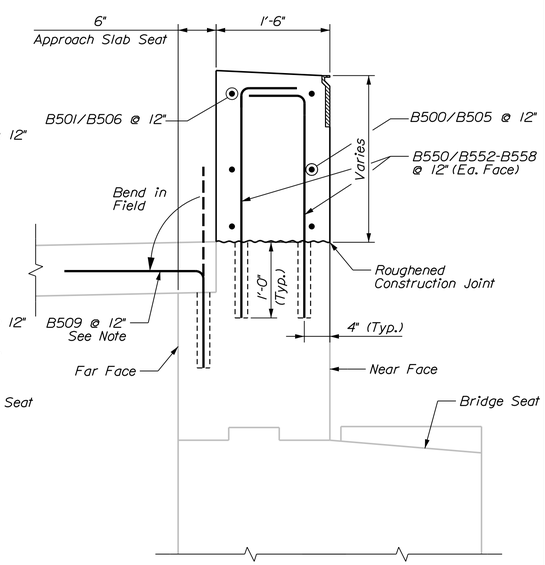

ABUTMENT 2 CONSTRUCTION SECTION
(SECTION D-D)

Note: Bar B509 shall be installed in existing approach slab seat at locations with partial height backwall replacement with new approach slabs. Lap with Approach Slab bars

STATE OF MAINE
DEPARTMENT OF TRANSPORTATION

PROJECT NO.
25631.06

WIN 25631.07

BRIDGE NO. 5985

BRIDGE PLANS

PROJ. MANAGER	J. BRASK	BY	DATE
DESIGN-DETAILED	S. LINDSLEY	E. MORRISON	06-24
CHECKED-REVIEWED	D. WHITE	B. COLBURN	06-24
DESIGN2-DETAILED2	N. EDMAN	J. FITZ	06-24
DESIGN3-DETAILED3			
REVISIONS 1			
REVISIONS 2			
REVISIONS 3			
REVISIONS 4			
FIELD CHANGES			

SIGNATURE

P.E. NUMBER

DATE

I-95 NB OVER SOMERSET AVE
BRIDGE NO. 5985

PITTSFIELD SOMERSET COUNTY

ABUTMENT SECTIONS
(BR. NO. 5985)

SHEET NUMBER
32
OF 110

Filename: ...\Oxx_Somerset_Br 5985_Abut_Section.dgn Division: Date:6/10/2024 Username: jfitzpatrick

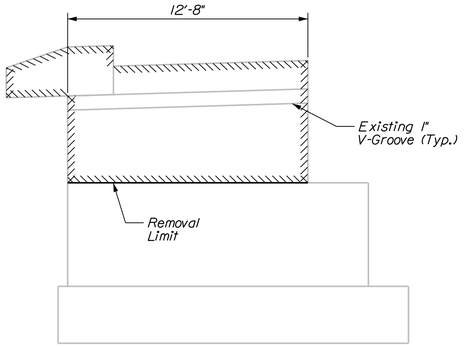

ABUTMENT 1 RIGHT WINGWALL DEMOLITION ELEVATION

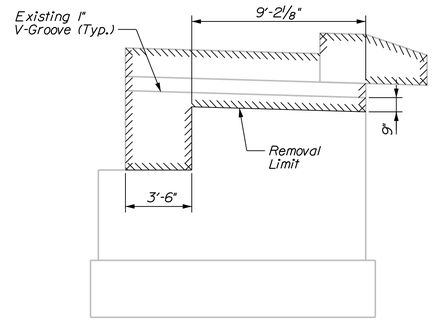

ABUTMENT 1 LEFT WINGWALL DEMOLITION ELEVATION

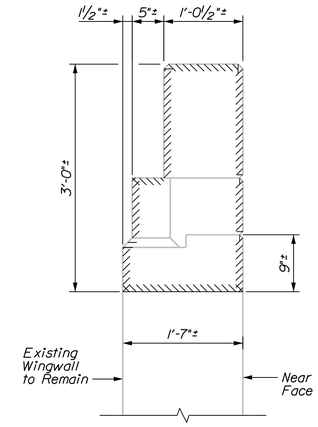

WINGWALL DEMOLITION SECTION

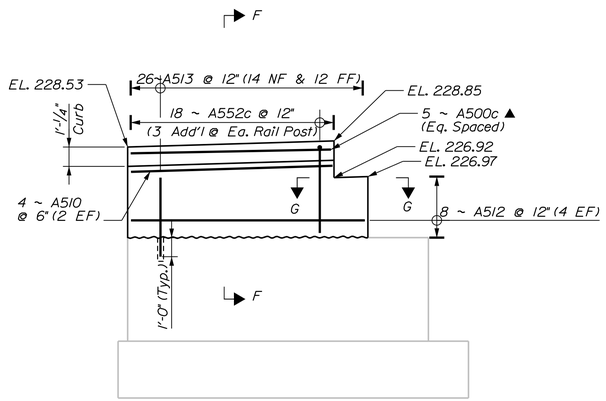

ABUTMENT 1 RIGHT WINGWALL CONSTRUCTION ELEVATION

(See Superstructure Plan for Bridge Rail Layout)
See Sheet 34 for Section F-F

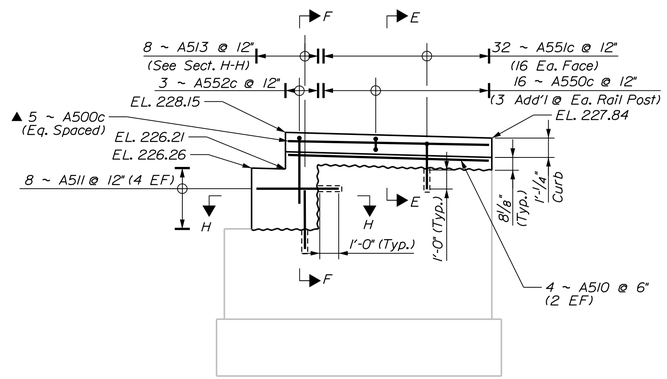

ABUTMENT 1 LEFT WINGWALL CONSTRUCTION ELEVATION

(See Superstructure Plan for Bridge Rail Layout)
See Sheet 34 for Section F-F

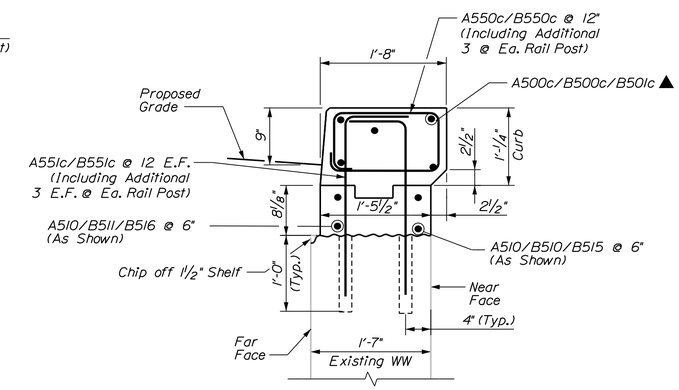

WINGWALL CONSTRUCTION SECTION
(SECTION E-E)

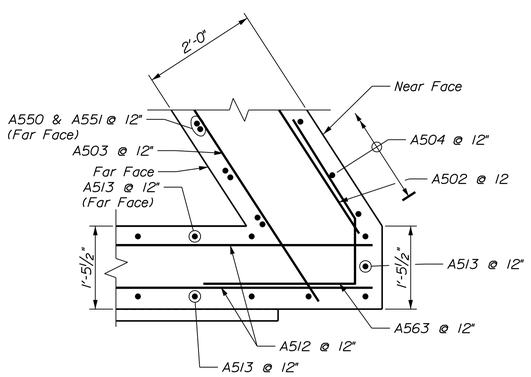

SECTION G-G

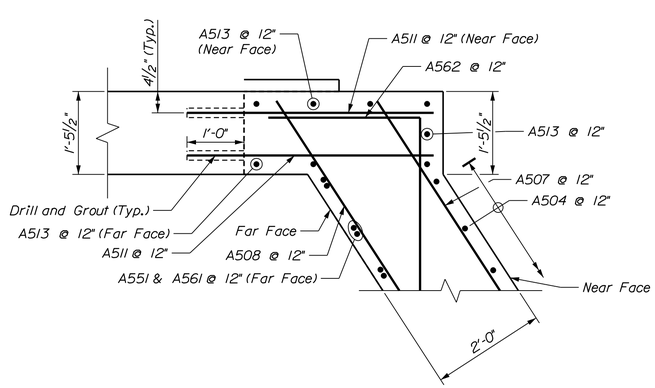

SECTION H-H

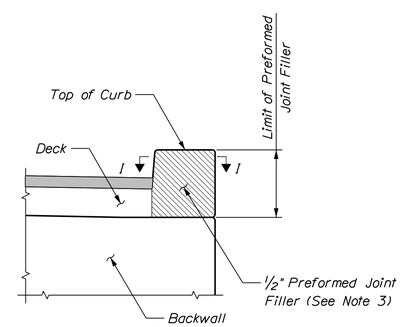

CURB JOINT DETAIL

At Abutment 1 Only.

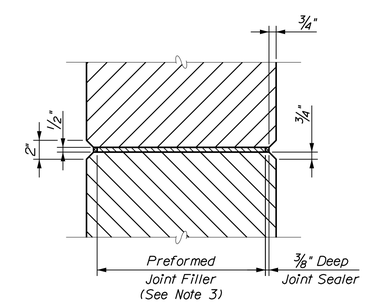

SECTION I-I

CURB JOINT NOTES

1. Construction of joints, including joint filler, shall be incidental to the related structural concrete pay item.
2. Preformed joint filler shall conform to ASTM designation D1752, Type 1 or ASTM D5249, Type 2. Preformed joint filler shall be a non staining, non bleeding type. Cork is not an acceptable joint filler material.
3. Joint sealer shall conform with subsection 714.04 of the specifications and shall be incidental to the related pay items.

LEGEND

▲ Bars to be Cut in Field

STATE OF MAINE
DEPARTMENT OF TRANSPORTATION
PROJECT NO. 2563106
WIN 25631.07
BRIDGE NO. 5985
BRIDGE PLANS

PROJ. MANAGER	J. BRASK		
DESIGN-DETAILED	S. LINDSLEY	E. MORRISON	06-24
CHECKED-REVIEWED	D. WHITE	B. COLBURN	06-24
DESIGN2-DETAILED2	N. EDMAN	J. FITZ	06-24
DESIGN3-DETAILED3			
REVISIONS 1			
REVISIONS 2			
REVISIONS 3			
REVISIONS 4			
FIELD CHANGES			

SIGNATURE
P.E. NUMBER
DATE

I-95 NB OVER SOMERSET AVE
BRIDGE NO. 5985
PITTSFIELD SOMERSET COUNTY

WINGWALL MODIFICATIONS
(BR. NO. 5985)

SHEET NUMBER
33
OF 110

Filename: ...\10xx_Somerset_Br 5985_Wingwall_Modifications 1.dgn
Username: jfitzpatrick
Date:6/10/2024

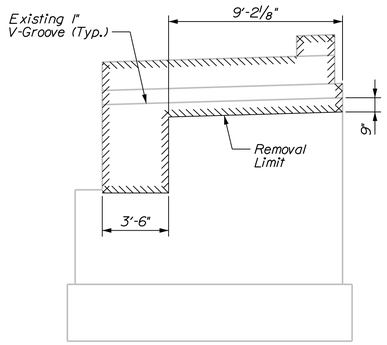

ABUTMENT 2 RIGHT WINGWALL DEMOLITION ELEVATION

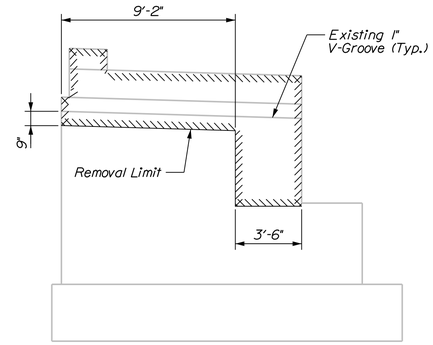

ABUTMENT 2 LEFT WINGWALL DEMOLITION ELEVATION

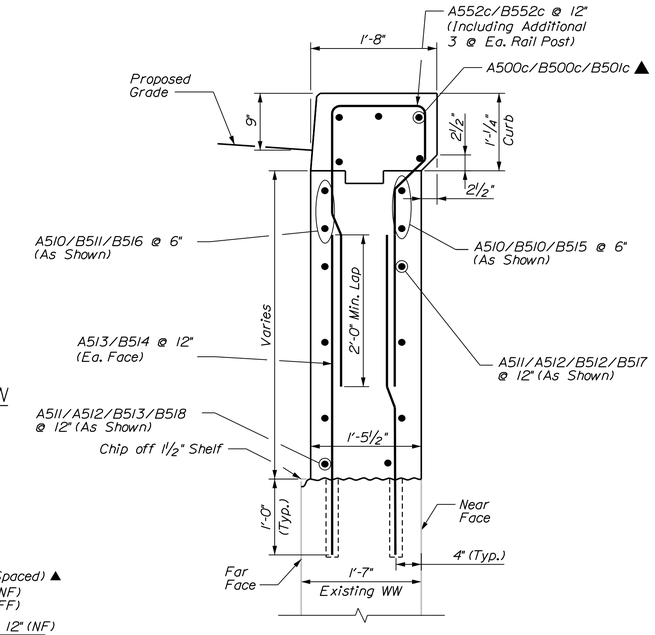

WINGWALL CONSTRUCTION SECTION (SECTION F-F)

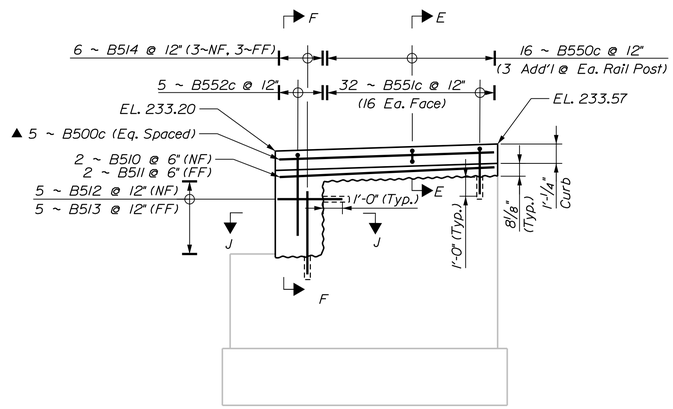

ABUTMENT 2 RIGHT WINGWALL CONSTRUCTION ELEVATION

(See Superstructure Plan for Bridge Rail Layout)
See Sheet 33 for Section E-E

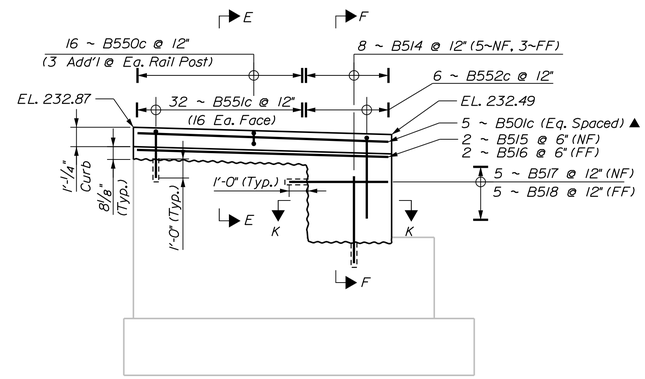

ABUTMENT 2 LEFT WINGWALL CONSTRUCTION ELEVATION

(See Superstructure Plan for Bridge Rail Layout)
See Sheet 33 for Section E-E

LEGEND

▲ Bars to be Cut in Field

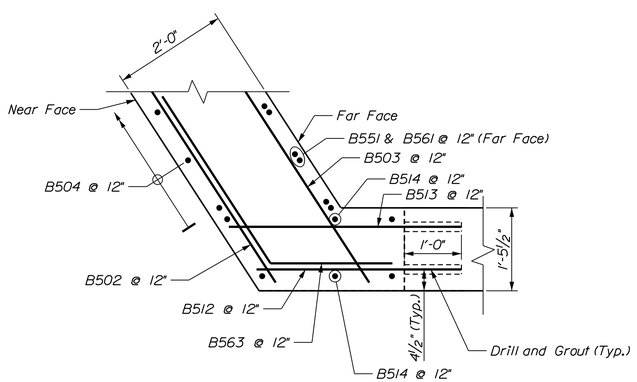

SECTION J-J

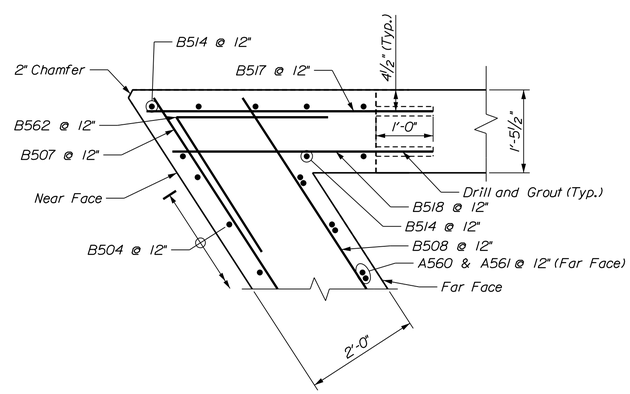

SECTION K-K

STATE OF MAINE
DEPARTMENT OF TRANSPORTATION
PROJECT NO. 25631.06
WIN 25631.07
BRIDGE NO. 5985
BRIDGE PLANS

PROJ. MANAGER	J. BRASK	BY	DATE
DESIGN-DETAILED	S. LINDSLEY	E. MORRISON	06-24
CHECKED-REVIEWED	D. WHITE	B. COLBURN	06-24
DESIGN2-DETAILED2	N. EDMAN	J. FITZ	06-24
DESIGN3-DETAILED3			
REVISIONS 1			
REVISIONS 2			
REVISIONS 3			
REVISIONS 4			
FIELD CHANGES			

SIGNATURE
P.E. NUMBER
DATE

I-95 NB OVER SOMERSET AVE
BRIDGE NO. 5985
PITTSFIELD SOMERSET COUNTY

WINGWALL MODIFICATIONS
(BR. NO. 5985)

SHEET NUMBER
34
OF 110

Filename: ...\0xx_Somerset_Br 5985_Wingwall_Modifications 2.dgn
Username: jfitzpatrick
Date:6/10/2024

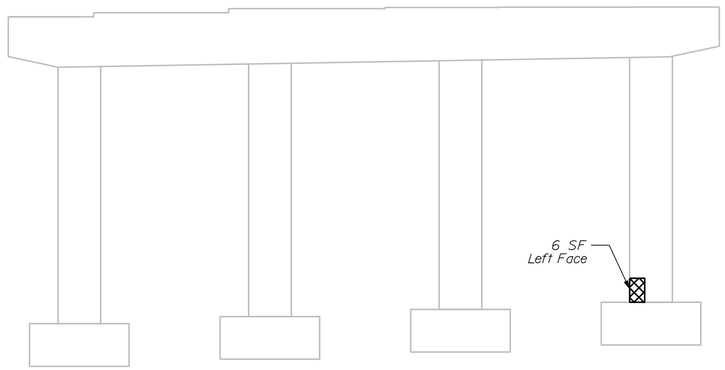

PIER 1

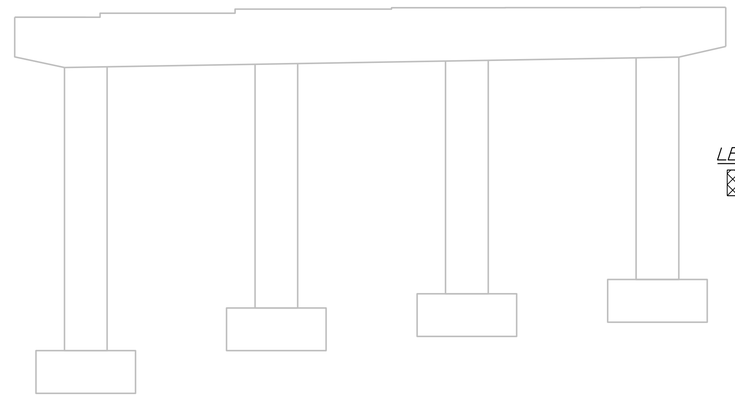

PIER 2

LEGEND

Repair of Vertical Surfaces < 8 Inches

STATE OF MAINE
DEPARTMENT OF TRANSPORTATION

PROJECT NO.
2563106

WIN 25631.07

BRIDGE NO. 5985

BRIDGE PLANS

PROJ. MANAGER	J. BRASK	BY	DATE
DESIGN-DETAILED	S. LINDSLEY	E. MORRISON	06-24
CHECKED-REVIEWED	D. WHITE	B. COLBURN	06-24
DESIGN2-DETAILED2	N. EDMAN	J. FITZ	06-24
DESIGN3-DETAILED3			
REVISIONS 1			
REVISIONS 2			
REVISIONS 3			
REVISIONS 4			
FIELD CHANGES			

SIGNATURE

P.E. NUMBER

DATE

I-95 NB OVER SOMERSET AVENUE
BRIDGE NO. 5985

PITTSFIELD SOMERSET COUNTY

PIER REPAIRS
(BR. NO. 5985)

SHEET NUMBER

35

OF 110

Filename: ...\0xx_Somerset_Br 5985_Pier_Repairs.dgn Division: Username: jfitzpatrick Date:6/10/2024

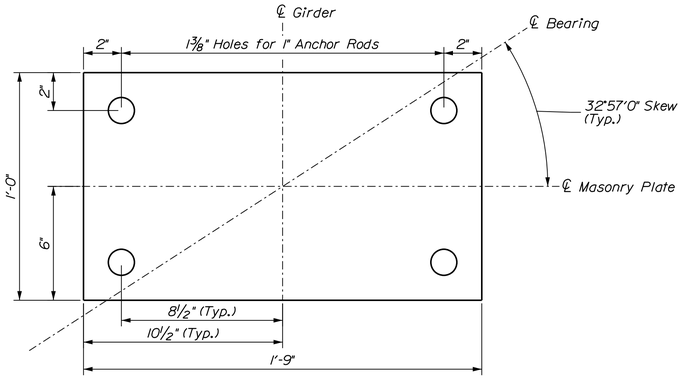

MASONRY PLATE

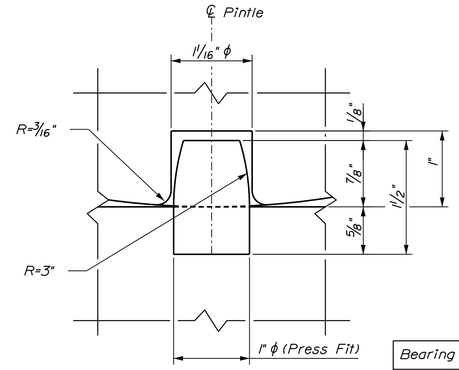

PINTLE DETAIL

Bearing	"T"	"H"
Pier 1	2 3/16"	1'-1 7/16"
Pier 2	2⅜"	1'-1 5/8"
Abutment 2	1¾"	1'-1"

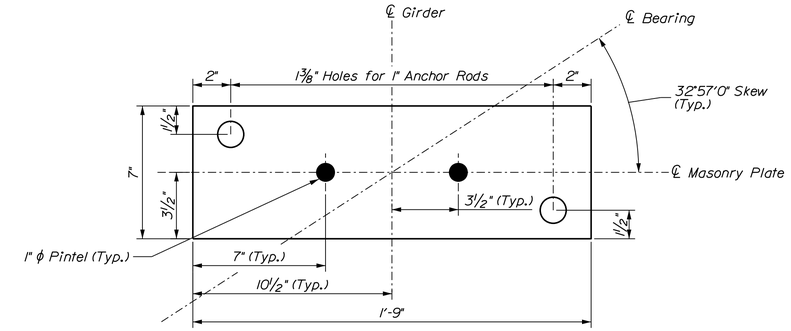

MASONRY PLATE

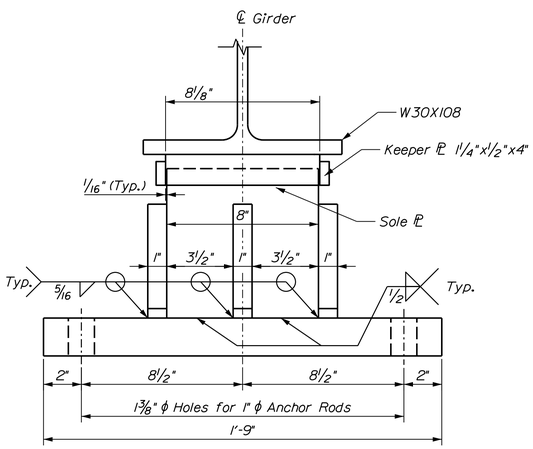

FRONT VIEW

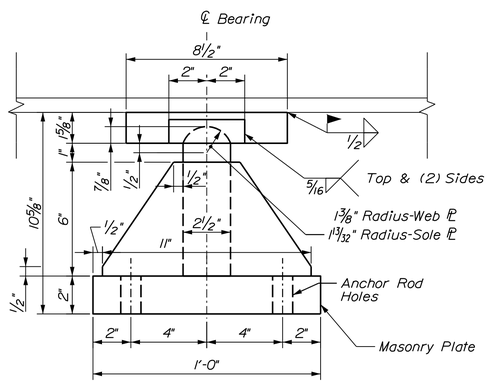

SIDE VIEW

FIXED BEARING ASSEMBLY

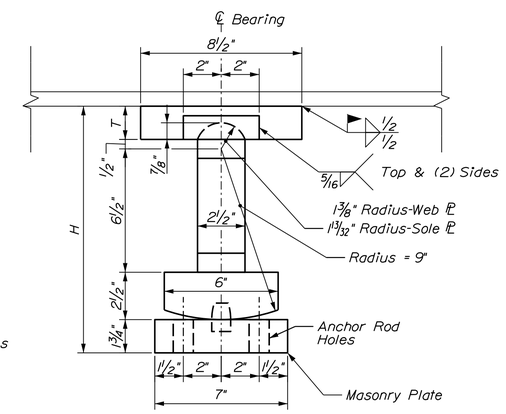

SIDE VIEW

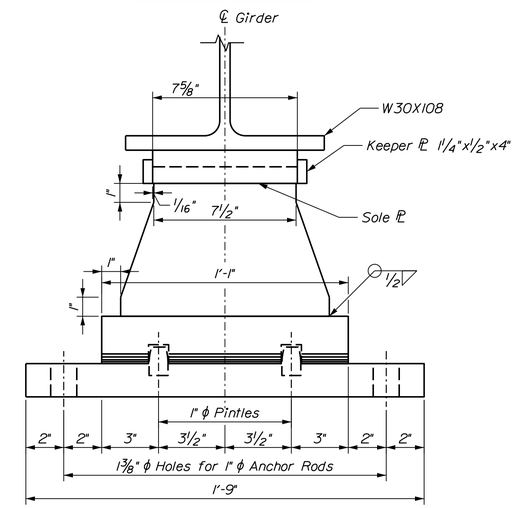

FRONT VIEW

EXPANSION BEARING ASSEMBLY

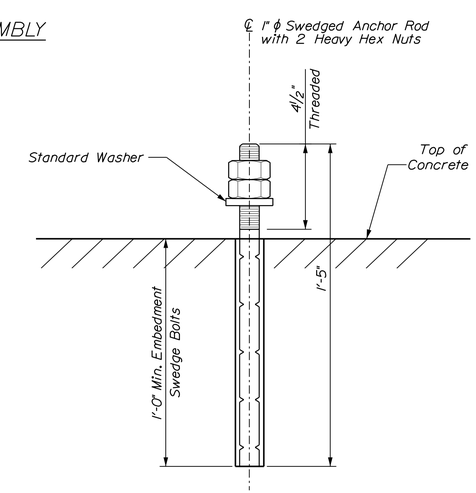

ANCHOR ROD DETAIL

TEMPORARY SUPPORT AND JACKING SYSTEM NOTES

1. The temporary support and jacking system shall be designed by the Contractor. The Contractor shall submit a complete set of design calculations and drawings for the temporary support, jacking system, and bearing replacement procedure. The calculations and drawings shall be stamped by a professional engineer licensed in Maine. See Special Provision for additional requirements.
2. Rigid vertical support of superstructure in the jacked position shall be provided by locking the jack rams or by furnishing and installing an independent support system. Except for during jacking operations, the superstructure shall not be hydraulically support.
3. See Special Provision for calculated unfactored jacking and temporary structural support loads.

BEARING NOTES

1. Bearing Assemblies, masonry plates, and pintles shall meet the requirements of ASTM A709, Grade 36 or Grade 50. Charpy V-notch tests are not required for steel used in bearing masonry plates.
2. Masonry plates and primary bearing structure shall be galvanized in accordance with Section 506 Structural Steel coatings. Sole plates, pintles, and top bearing radius shall not be galvanized and shall meet the surface roughness requirements in the Standard Specifications.
3. Anchor bolts shall be swedged or threaded on the embedded portion of the rod. Anchor rods shall meet the requirements of ASTM F1554, Grade 105, and be galvanized according to ASTM A 153.
4. Anchor rods shall be drilled and grouted in place using a material listed on the Maine Department of Transportation Qualified Products List.
5. Upset the threads of the anchor rods after assembly.
6. The existing anchor rods for the bearing assemblies and masonry plate being replaced shall be cut flush with the bridge seat at limits of concrete pedestal demolition. Payment for removal and installation of new anchor rods is incidental to the Bearing Installation Pay Item.

NOTES

1. This work includes removal and replacement of three expansion bearing assemblies, one masonry plate, and one fixed bearing assembly at locations shown on the Key Plan.
2. All existing dimensions and information shown on the plans are based on as-built drawings. The Contractor shall field verify all relevant dimensions prior to submission of shop drawings.
3. At the location of the new bearing assemblies and masonry plates, the concrete pedestal shall be dressed one inch larger all around than the size of the masonry plate to match the existing bottom of masonry plate elevation (prior to demolition) exactly.

STATE OF MAINE
DEPARTMENT OF TRANSPORTATION
PROJECT NO. 25631.06
WIN 25631.06
BRIDGE NO. 1447
BRIDGE PLANS

PROJ. MANAGER	J. BRASK	BY	DATE
DESIGN-DETAILED	S. LINDSLEY	E. MORRISON	06-24
CHECKED-REVIEWED	D. WHITE	B. COLBURN	06-24
DESIGN2-DETAILED2	N. EDMAN	J. FITZ	06-24
DESIGN3-DETAILED3			
REVISIONS 1			
REVISIONS 2			
REVISIONS 3			
REVISIONS 4			
FIELD CHANGES			

SIGNATURE
P.E. NUMBER
DATE

I-95 SB OVER SOMERSET AVE
BRIDGE NO. 1447
PITTSFIELD SOMERSET COUNTY

BEARING DETAILS

SHEET NUMBER
36
OF 110

Filename: ...\0xx_Somerset_Bearing_Details.dgn Division: Username: jfitzpatrick Date:6/10/2024

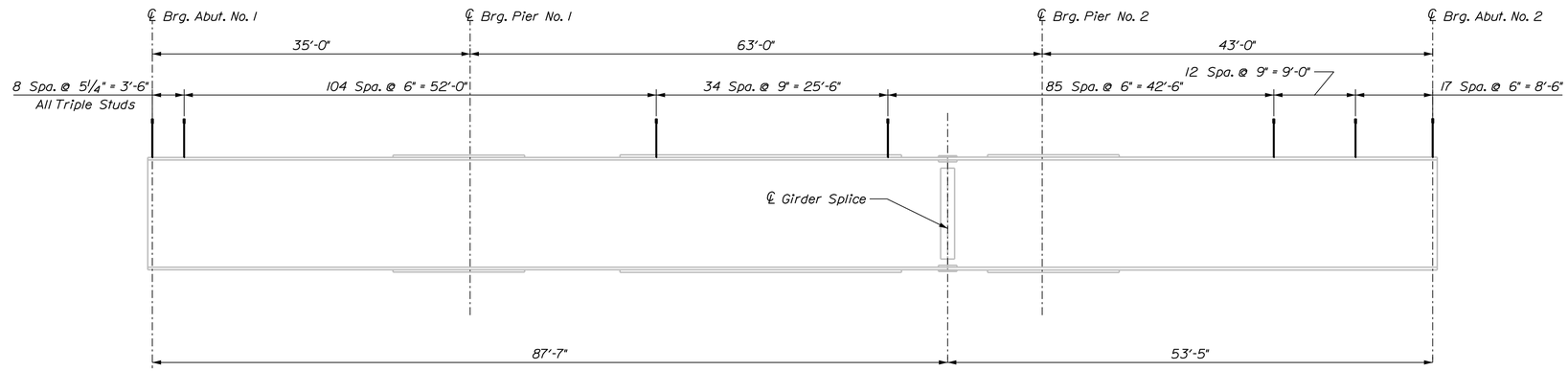

SHEAR CONNECTOR LAYOUT

783 (261 x 3 Rows) Studs Per Girder
(4698 Studs Total)

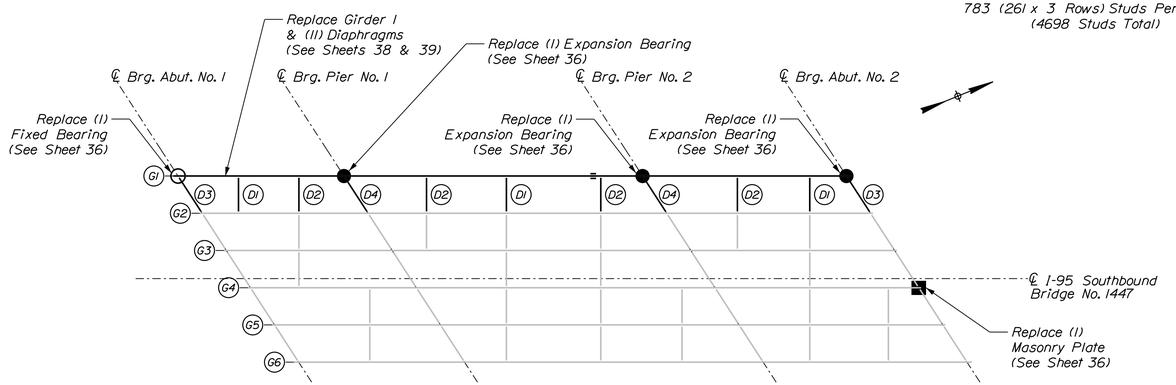

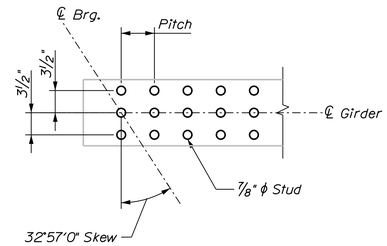

SHEAR CONNECTOR DETAIL

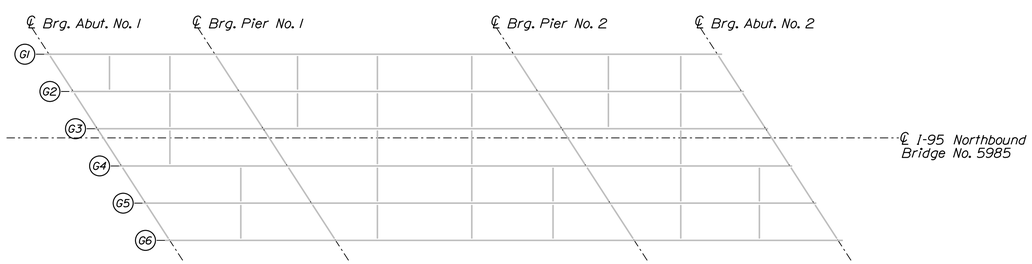

KEY PLAN

LEGEND

- ■ Proposed Masonry Plate Replacement
- ● Proposed Expansion Bearing Replacement
- ○ Proposed Fixed Bearing Replacement
- (Dx) Proposed Diaphragm Replacement

SHEAR CONNECTOR NOTES

1. Dimensions are measured along centerline of the girder.
2. Prior to installing the proposed shear studs, the Contractor shall clean the top flange so that it is free of debris, rust, scale, oil and other contaminates that would adversely affect the welding operation. Payment for cleaning the top flange for installation of proposed shear studs shall be incidental to Item 505.08, Shear Connectors. Existing steel may be coated with a lead-based paint system. See General Notes for more information.
3. The proposed shear studs shall be ⅞" diameter. Studs shall penetrate into the deck a minimum of 2" and maintain a clear cover of 2" to the top of the studs.
4. If existing shear connectors are present, they shall be removed such that they project 1 inch maximum above the top of the existing top flange unless they conflict with the installation of the new shear connectors or any other work. If the existing shear connectors interfere with installation of the new shear connectors or any other work, they shall be removed completely and ground flush with the top flange. All costs associated with this work shall be incidental to related Contract items.
5. Pitch spacing may be adjusted at bolted splices to avoid splice bolts.

STATE OF MAINE
DEPARTMENT OF TRANSPORTATION
PROJECT NO.
25631.06
WIN 25631.06 & 25631.07
BRIDGE NO. 1447 & 5985
BRIDGE PLANS

PROJ. MANAGER	J. BRASK	BY	DATE
DESIGN-DETAILED	S. LINDSLEY	E. MORRISON	06-24
CHECKED-REVIEWED	D. WHITE	B. COLBURN	06-24
DESIGN2-DETAILED2	N. EDMAN	J. FITZ	06-24
DESIGN3-DETAILED3			
REVISIONS 1			
REVISIONS 2			
REVISIONS 3			
REVISIONS 4			
FIELD CHANGES			

SIGNATURE
P.E. NUMBER
DATE

I-95 SB & NB OVER SOMERSET AVE
BRIDGE NO. 1447 & 5985
PITTSFIELD SOMERSET COUNTY

KEY PLAN &
SHEAR CONNECTOR LAYOUT

SHEET NUMBER
37
OF 110

Filename: ...\0xx_Somerset_Shear_Stud_Layout.dgnDivision: Username: jfitzpatrick Date:6/10/2024

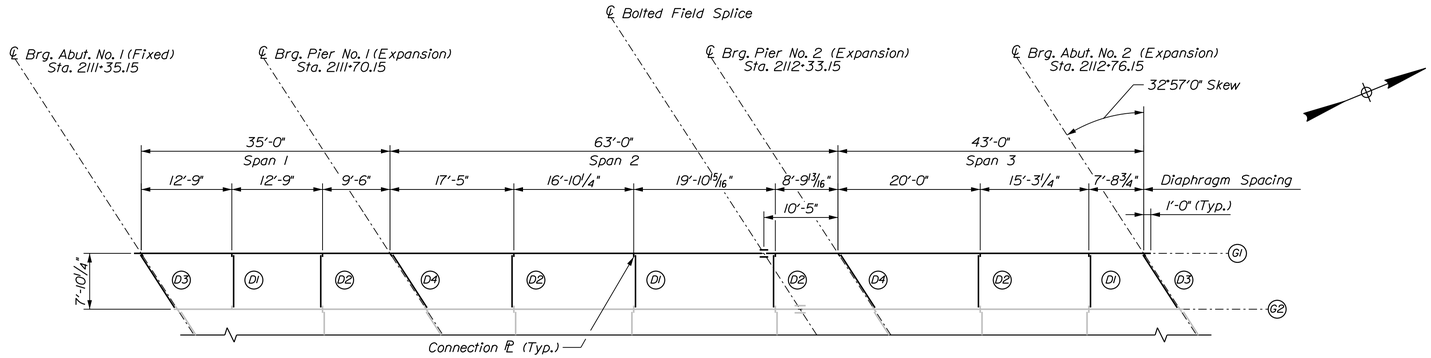

PARTIAL FRAMING PLAN - BRIDGE NO. 1447

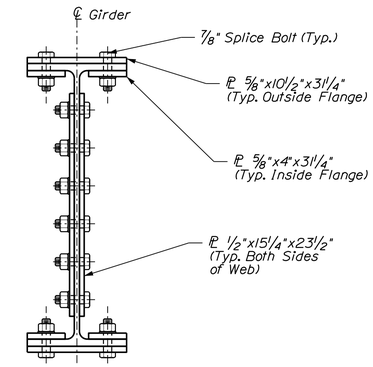

TYPICAL FIELD SPLICE SECTION

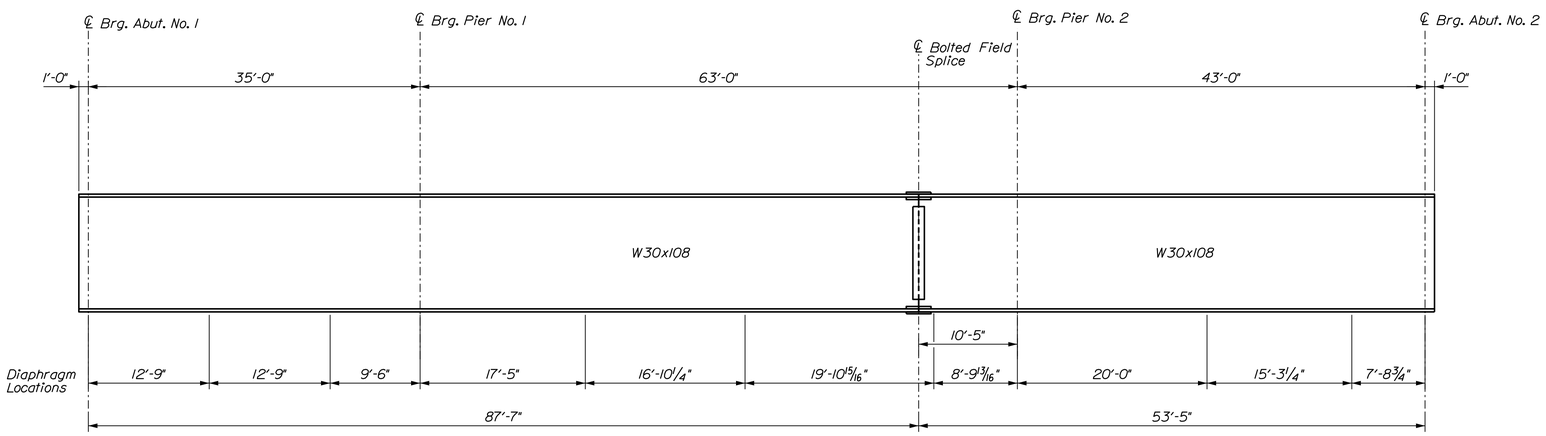

GIRDER 1 ELEVATION
BRIDGE NO. 1447 ONLY

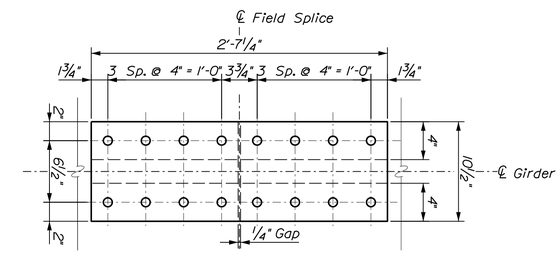

FIELD SPLICE PLAN

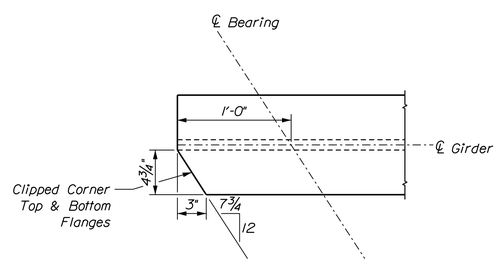

FLANGE CLIP DETAIL, PLAN VIEW
Abutment 1 Clip Shown, Abutment 2 Clip Similar

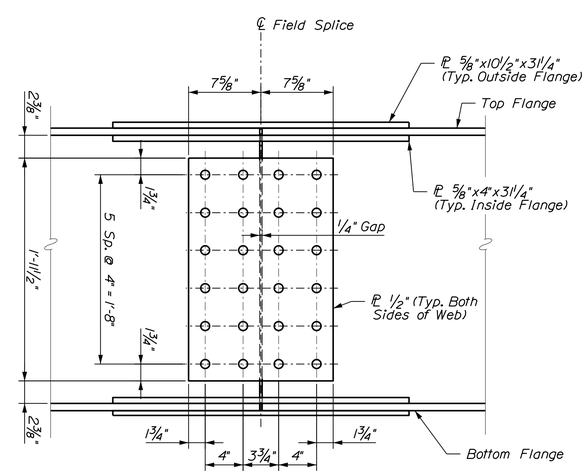

FIELD SPLICE ELEVATION

STATE OF MAINE
DEPARTMENT OF TRANSPORTATION
PROJECT NO. 25631.06
WIN 25631.06
BRIDGE NO. 1447
BRIDGE PLANS

PROJ. MANAGER	J. BRASK	BY	DATE
DESIGN-DETAILED	S. LINDSLEY	E. MORRISON	06-24
CHECKED-REVIEWED	D. WHITE	B. COLBURN	06-24
DESIGN2-DETAILED2	N. EDMAN	J. FITZ	06-24
DESIGN3-DETAILED3			
REVISIONS 1			
REVISIONS 2			
REVISIONS 3			
REVISIONS 4			
FIELD CHANGES			

SIGNATURE
P.E. NUMBER
DATE

I-95 SB OVER SOMERSET AVE
BRIDGE NO. 1447
PITTSFIELD SOMERSET COUNTY

FRAMING PLAN & DETAILS

SHEET NUMBER
38
OF 110

Filename: ...\0xx_Somerset_Structural_Steel_Details.dgn Division: Bridge Design Username: jfitzpatrick Date:6/10/2024

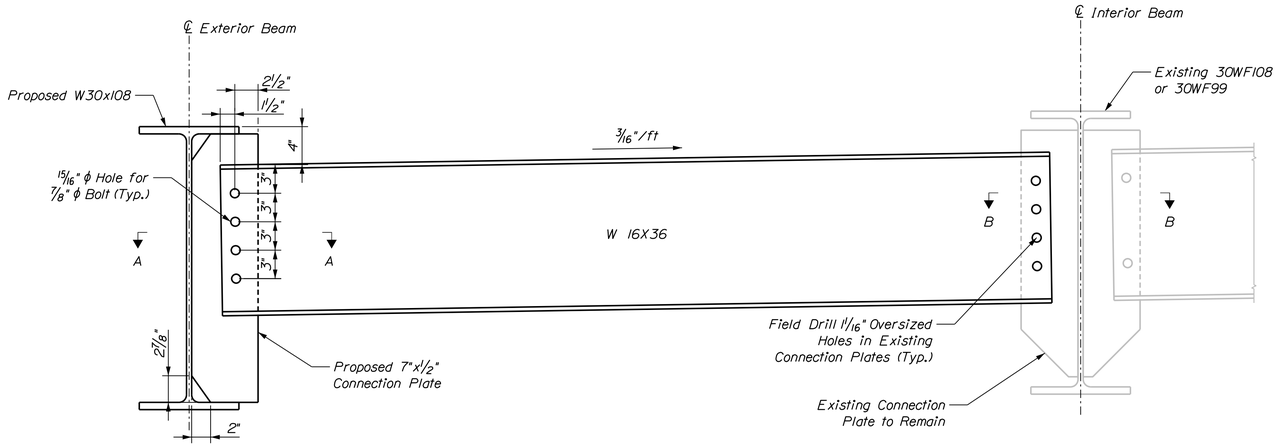

DIAPHRAGM D2 & D3 DETAIL

D2 Shown, D3 Similar

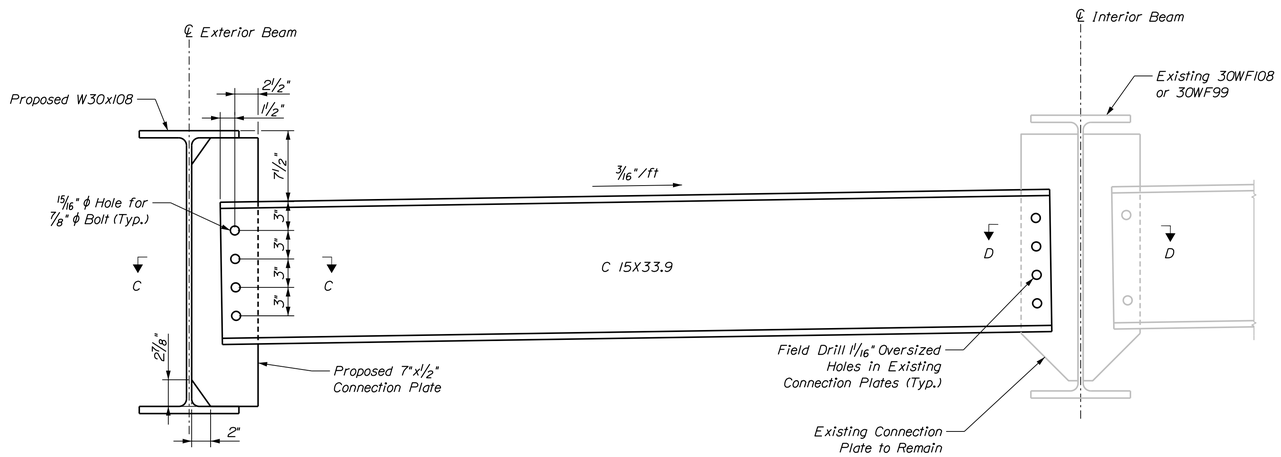

DIAPHRAGM D1 & D4 DETAIL

D1 Shown, D4 Similar

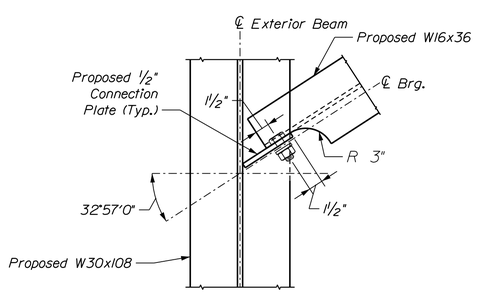

SECTION A-A

D3 Shown, D2 Similar

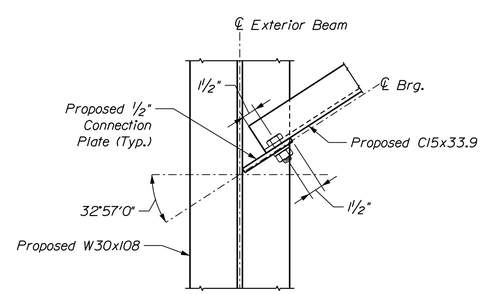

SECTION C-C

D4 Shown, D1 Similar

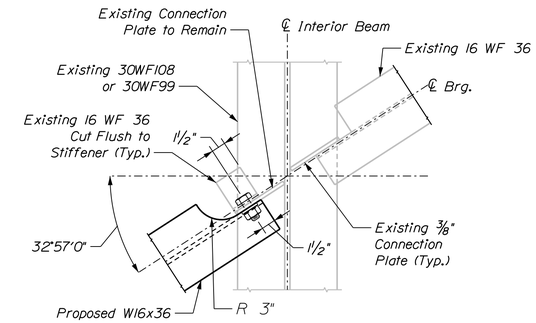

SECTION B-B

D3 Shown, D2 Similar

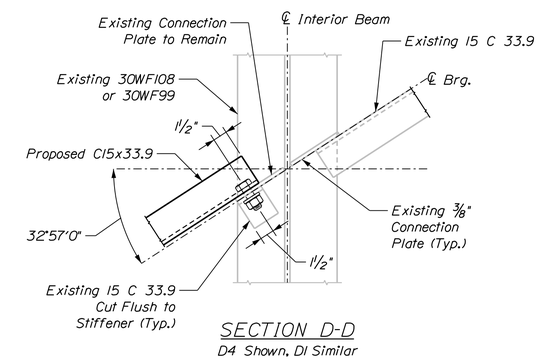

SECTION D-D

D4 Shown, D1 Similar

STRUCTURAL STEEL NOTES

1. Replace eleven Diaphragms and associated connection plates as shown on Key Plan.
2. No camber required in new GI. Place any Natural Mill Camber up.
3. Connection plates shall be plumb after erection.
4. All connection plate and stiffener welds shall be 5/16" fillet welds.
5. All bolts shall be 7/8" ϕ, ASTM F3125 Grade, Type 1, High Strength Bolts.
6. Proposed Structural Steel shall be coated in accordance with Standard Specifications Section 506, Shop Applied Protective Coating - Steel (Zinc Rich Coating System), except NEPCOAT Qualified Product List C may be used.
7. Shop drill 15/16" ϕ holes in diaphragms and connection plates.
8. Contractor shall field measure existing girders to provide tight fit of connection angles against girder flanges.
9. Proposed steel contact surfaces shall be cleaned in accordance with Pay Item 506.1775 Field Painting, New and Existing Steel with Zinc Rich Paint.
10. Payment for field measuring and field drilling shall be incidental to Pay Item 504.71, "Structural Steel Erection".

STATE OF MAINE
DEPARTMENT OF TRANSPORTATION

PROJECT NO.
2563106

WIN 25631.06

BRIDGE NO. 1447

BRIDGE PLANS

PROJ. MANAGER	J. BRASK	BY	DATE
DESIGN-DETAILED	S. LINDSLEY	E. MORRISON	06-24
CHECKED-REVIEWED	D. WHITE	B. COLBURN	06-24
DESIGN2-DETAILED2	N. EDMAN	J. FITZ	06-24
DESIGN3-DETAILED3			
REVISIONS 1			
REVISIONS 2			
REVISIONS 3			
REVISIONS 4			
FIELD CHANGES			

SIGNATURE

P.E. NUMBER

DATE

I-95 SB OVER SOMERSET AVE
BRIDGE NO. 1447

PITTSFIELD SOMERSET COUNTY

STRUCTURAL STEEL DETAILS

SHEET NUMBER

39

OF 110

Filename: ...\10xx_Somerset_Structural_Steel_Details.dgn Design Date:6/10/2024 Username: jfitzpatrick

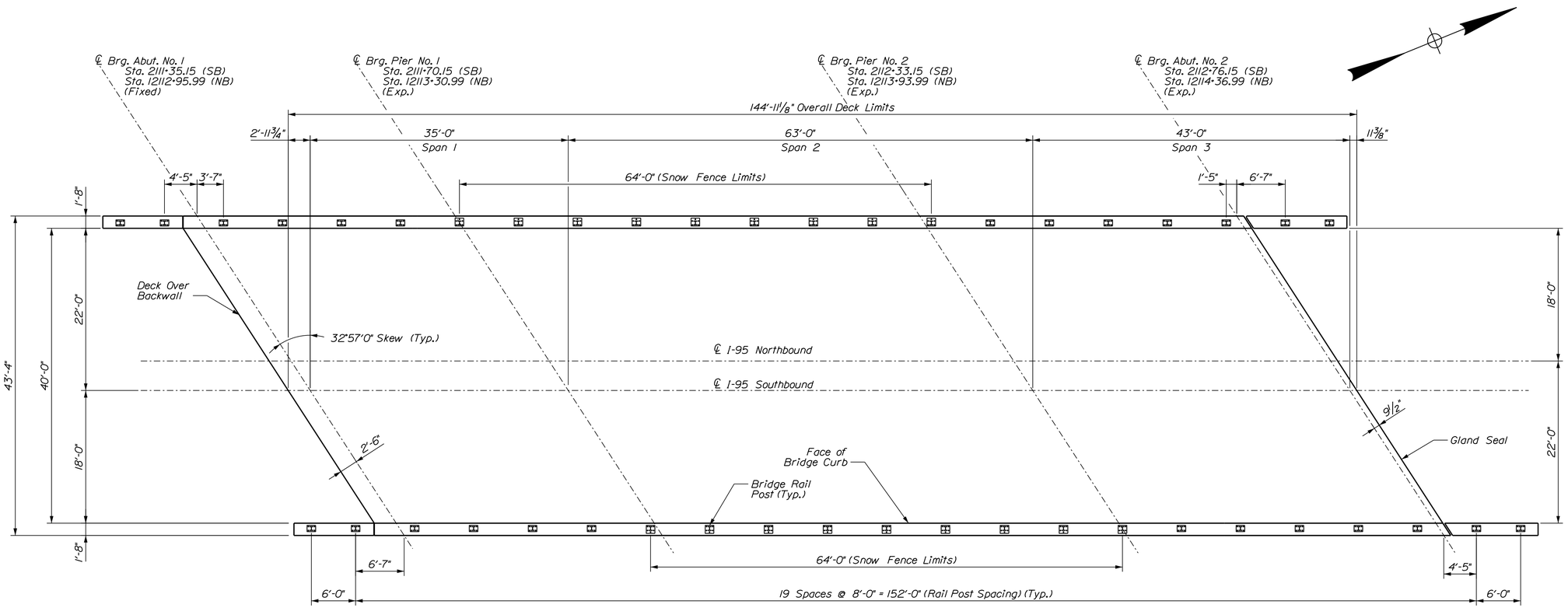

SUPERSTRUCTURE PLAN

GIRDER	BRIDGE NO. 1447 - BOTTOM OF SLAB ELEVATIONS																													
	CL BRG. ABUT. NO. 1	0.1 x L	0.2 x L	0.3 x L	0.4 x L	0.5 x L	0.6 x L	0.7 x L	0.8 x L	0.9 x L	CL BRG. PIER NO. 1	0.1 x L	0.2 x L	0.3 x L	0.4 x L	0.5 x L	0.6 x L	0.7 x L	0.8 x L	0.9 x L	CL BRG. PIER NO. 2	0.1 x L	0.2 x L	0.3 x L	0.4 x L	0.5 x L	0.6 x L	0.7 x L	0.8 x L	0.9 x L	CL BRG. ABUT. NO. 2
G1	220.96	221.08	221.20	221.33	221.45	221.57	221.70	221.82	221.94	222.07	222.20	222.43	222.67	222.91	223.14	223.36	223.58	223.80	224.00	224.21	224.43	224.58	224.73	224.89	225.04	225.20	225.35	225.50	225.65	225.80	225.95
G2	221.27	221.40	221.52	221.65	221.77	221.89	222.01	222.14	222.26	222.39	222.51	222.75	222.98	223.22	223.45	223.68	223.89	224.11	224.32	224.53	224.74	224.89	225.05	225.20	225.36	225.51	225.67	225.82	225.97	226.12	226.27
G3	221.59	221.71	221.84	221.96	222.09	222.21	222.33	222.45	222.58	222.70	222.83	223.06	223.30	223.54	223.77	223.99	224.21	224.43	224.64	224.85	225.06	225.21	225.36	225.52	225.68	225.83	225.99	226.14	226.29	226.44	226.58
G4	221.84	221.96	222.09	222.21	222.34	222.46	222.58	222.70	222.83	222.95	223.08	223.31	223.55	223.79	224.02	224.24	224.46	224.68	224.89	225.10	225.31	225.46	225.61	225.77	225.93	226.08	226.23	226.39	226.54	226.69	226.83
G5	221.88	222.01	222.13	222.26	222.38	222.50	222.63	222.75	222.87	223.00	223.12	223.36	223.59	223.83	224.06	224.29	224.51	224.72	224.93	225.14	225.35	225.50	225.66	225.81	225.97	226.12	226.28	226.43	226.58	226.73	226.88
G6	221.93	222.05	222.18	222.30	222.42	222.55	222.67	222.79	222.92	223.04	223.17	223.40	223.63	223.87	224.10	224.32	224.54	224.76	224.97	225.18	225.40	225.55	225.70	225.86	226.01	226.17	226.32	226.47	226.62	226.77	226.92

GIRDER	BRIDGE NO. 5985 - BOTTOM OF SLAB ELEVATIONS																													
	CL BRG. ABUT. NO. 1	0.1 x L	0.2 x L	0.3 x L	0.4 x L	0.5 x L	0.6 x L	0.7 x L	0.8 x L	0.9 x L	CL BRG. PIER NO. 1	0.1 x L	0.2 x L	0.3 x L	0.4 x L	0.5 x L	0.6 x L	0.7 x L	0.8 x L	0.9 x L	CL BRG. PIER NO. 2	0.1 x L	0.2 x L	0.3 x L	0.4 x L	0.5 x L	0.6 x L	0.7 x L	0.8 x L	0.9 x L	CL BRG. ABUT. NO. 2
G1	226.56	226.67	226.77	226.88	226.98	227.09	227.19	227.29	227.40	227.50	227.61	227.81	228.01	228.21	228.40	228.59	228.78	228.96	229.14	229.32	229.50	229.62	229.75	229.89	230.02	230.15	230.28	230.41	230.53	230.66	230.78
G2	226.85	226.96	227.06	227.17	227.27	227.37	227.48	227.58	227.69	227.79	227.90	228.10	228.30	228.50	228.70	228.89	229.07	229.25	229.43	229.61	229.79	229.91	230.04	230.17	230.31	230.44	230.57	230.70	230.82	230.95	231.07
G3	227.14	227.25	227.35	227.46	227.56	227.66	227.77	227.87	227.98	228.08	228.19	228.39	228.59	228.79	228.99	229.18	229.36	229.54	229.72	229.89	230.07	230.20	230.33	230.46	230.60	230.73	230.86	230.99	231.11	231.24	231.36
G4	227.22	227.33	227.43	227.54	227.64	227.75	227.85	227.95	228.06	228.16	228.27	228.47	228.67	228.87	229.07	229.26	229.45	229.63	229.80	229.98	230.16	230.28	230.41	230.55	230.68	230.81	230.94	231.07	231.20	231.32	231.45
G5	227.24	227.34	227.45	227.55	227.66	227.76	227.87	227.97	228.07	228.18	228.29	228.49	228.69	228.89	229.09	229.28	229.46	229.64	229.82	229.99	230.17	230.30	230.43	230.56	230.69	230.83	230.96	231.09	231.21	231.34	231.46
G6	227.25	227.36	227.47	227.57	227.67	227.78	227.88	227.99	228.09	228.20	228.30	228.50	228.70	228.90	229.09	229.28	229.47	229.65	229.83	230.01	230.19	230.32	230.45	230.58	230.71	230.84	230.97	231.10	231.23	231.35	231.48

STATE OF MAINE
DEPARTMENT OF TRANSPORTATION
PROJECT NO.
25631.06
WIN 25631.06 & 25631.07
BRIDGE NO. 1447 & 5985
BRIDGE PLANS

PROJ. MANAGER	J. BRASK	BY	DATE
DESIGN-DETAILED	S. LINDSLEY	E. MORRISON	06-24
CHECKED-REVIEWED	D. WHITE	B. COLBURN	06-24
DESIGN2-DETAILED2	N. EDMAN	J. FITZ	06-24
DESIGN3-DETAILED3			
REVISIONS 1			
REVISIONS 2			
REVISIONS 3			
REVISIONS 4			
FIELD CHANGES			

SIGNATURE

P.E. NUMBER

DATE

I-95 SB & NB OVER SOMERSET AVE
BRIDGE NO. 1447 & 5985
PITTSFIELD SOMERSET COUNTY

SUPERSTRUCTURE PLAN

SHEET NUMBER
40
OF 110

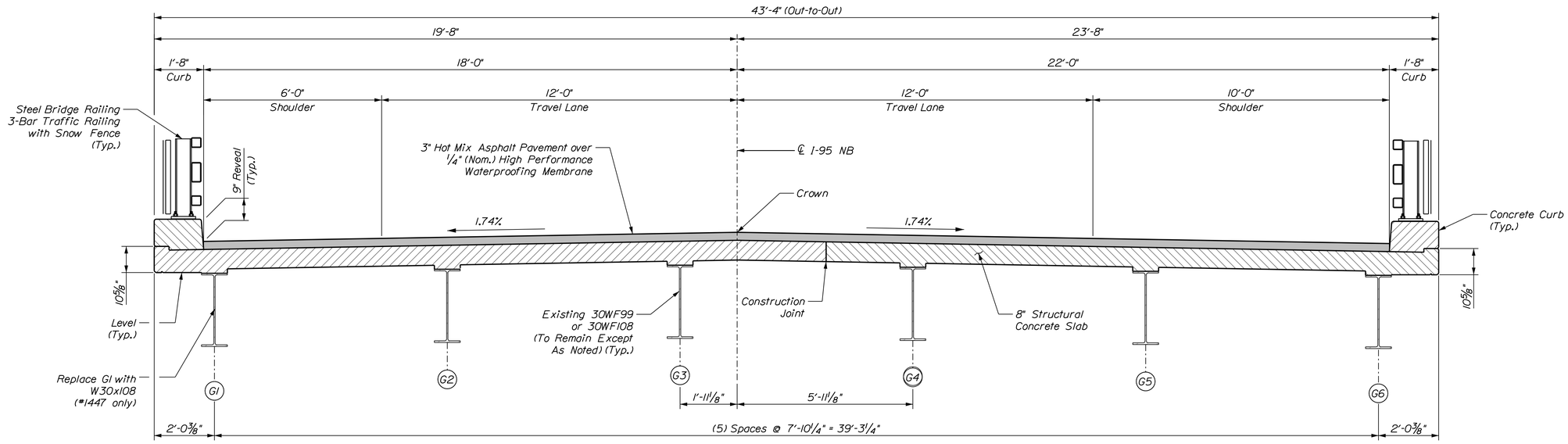

TRANSVERSE SECTION (SOMERSET AVE)

Northbound shown, Southbound Crown and Lanes opposite hand.

SUPERSTRUCTURE NOTES

1. The theoretical blocking used for design of the structure is 2.5 inches at the centerlines of bearing of the abutments and piers as measured from the top of the rolled beam flange. Refer to Standard Detail 502(03) for blocking details.
2. Reinforcing steel shall have a minimum concrete cover of 2 inches unless otherwise noted.
3. Form a one inch V-groove on the fascias at the horizontal joint between the curb and slab.
4. The superstructure slab concrete shall be placed continuously and shall be kept plastic until the entire placement has been made.
5. Precast Concrete Deck Panels are not allowed on this project.
6. Deck reinforcement shall be Plain Steel and curb reinforcement shall be Low-Carbon Chromium unless otherwise noted.
7. Contractor shall stagger the splice locations of the longitudinal bars.

STATE OF MAINE
DEPARTMENT OF TRANSPORTATION

PROJECT NO.
25631.06

WIN 25631.06 & 25631.07

BRIDGE NO. 1447 & 5985

BRIDGE PLANS

PROJ. MANAGER	J. BRASK	BY	DATE
DESIGN-DETAILED	S. LINDSLEY	E. MORRISON	06-24
CHECKED-REVIEWED	D. WHITE	B. COLBURN	06-24
DESIGN2-DETAILED2	N. EDMAN	J. FITZ	06-24
DESIGN3-DETAILED3			
REVISIONS 1			
REVISIONS 2			
REVISIONS 3			
REVISIONS 4			
FIELD CHANGES			

SIGNATURE

P.E. NUMBER

DATE

I-95 SB & NB OVER SOMERSET AVE
BRIDGE NO. 1447 & 5985
PITTSFIELD SOMERSET COUNTY

TRANSVERSE SECTION

SHEET NUMBER
41
OF 110

Filename: ...\0xx_Somerset_Typical_Section.dgn Division: Username: jfitzpatrick Date:6/10/2024

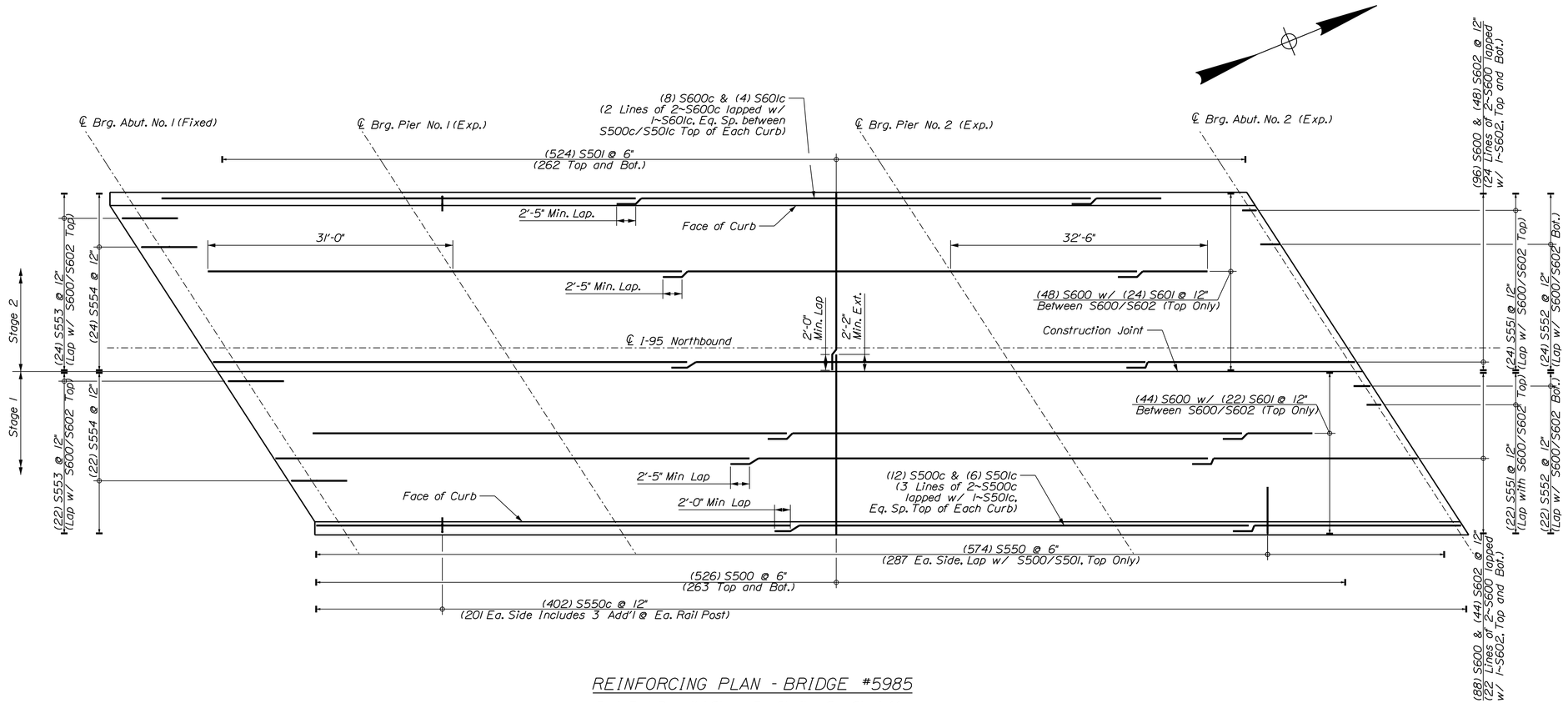

REINFORCING PLAN - BRIDGE #5985

Deck End Bars Not Shown For Clarity - See Sheet 44

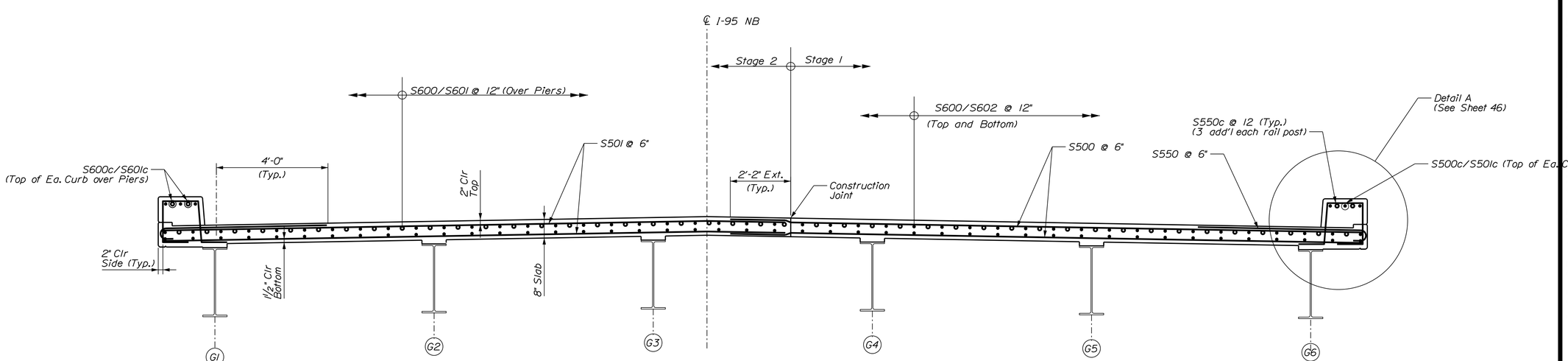

TRANSVERSE SECTION

I-95 Northbound Shown
I-95 Southbound Similar

STATE OF MAINE
DEPARTMENT OF TRANSPORTATION

PROJECT NO.
25631.06

WIN 25631.06 & 25631.07

BRIDGE NO. 1447 & 5985

BRIDGE PLANS

PROJ. MANAGER	J. BRASK	BY	DATE
DESIGN-DETAILED	S. LINDSLEY	E. MORRISON	06-24
CHECKED-REVIEWED	D. WHITE	B. COLBURN	06-24
DESIGN2-DETAILED2	N. EDMAN	J. FITZ	06-24
DESIGN3-DETAILED3			
REVISIONS 1			
REVISIONS 2			
REVISIONS 3			
REVISIONS 4			
FIELD CHANGES			

SIGNATURE

P.E. NUMBER

DATE

I-95 SB & NB OVER SOMERSET AVE
BRIDGE NO. 1447 & 5985
PITTSFIELD SOMERSET COUNTY

DECK REINFORCING

SHEET NUMBER
42
OF 110

Filename: ...\0xx_Somerset_Reinforcing_Plan.dgn Division: Username: jfitzpatrick Date:6/10/2024

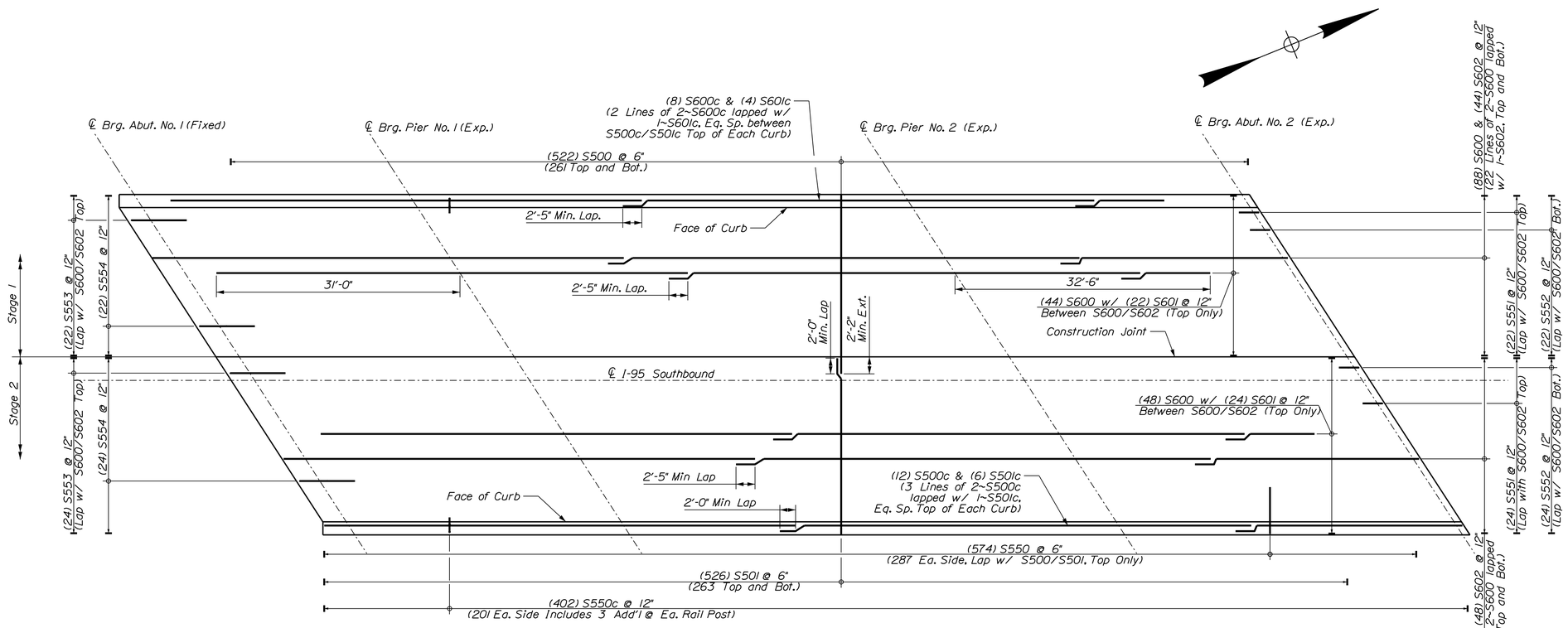

REINFORCING PLAN - BRIDGE #1447

Deck End Bars Not Shown For Clarity - See Sheet 45

STATE OF MAINE
DEPARTMENT OF TRANSPORTATION

PROJECT NO.
25631 06

WIN 25631.06 & 25631.07

BRIDGE NO. 1447 & 5985

BRIDGE PLANS

PROJ. MANAGER	J. BRASK	BY	DATE
DESIGN-DETAILED	S. LINDSLEY	E. MORRISON	06-24
CHECKED-REVIEWED	D. WHITE	B. COLBURN	06-24
DESIGN2-DETAILED2	N. EDMAN	J. FITZ	06-24
DESIGN3-DETAILED3			
REVISIONS 1			
REVISIONS 2			
REVISIONS 3			
REVISIONS 4			
FIELD CHANGES			

SIGNATURE

P.E. NUMBER

DATE

I-95 SB OVER SOMERSET AVE
BRIDGE NO. 1447

PITTSFIELD SOMERSET COUNTY

DECK REINFORCING

SHEET NUMBER

43

OF 110

Filename: ...\0xx_Somerset_Reinforcing_Plan 2.dgn Division: Username: jfitzpatrick Date:6/10/2024

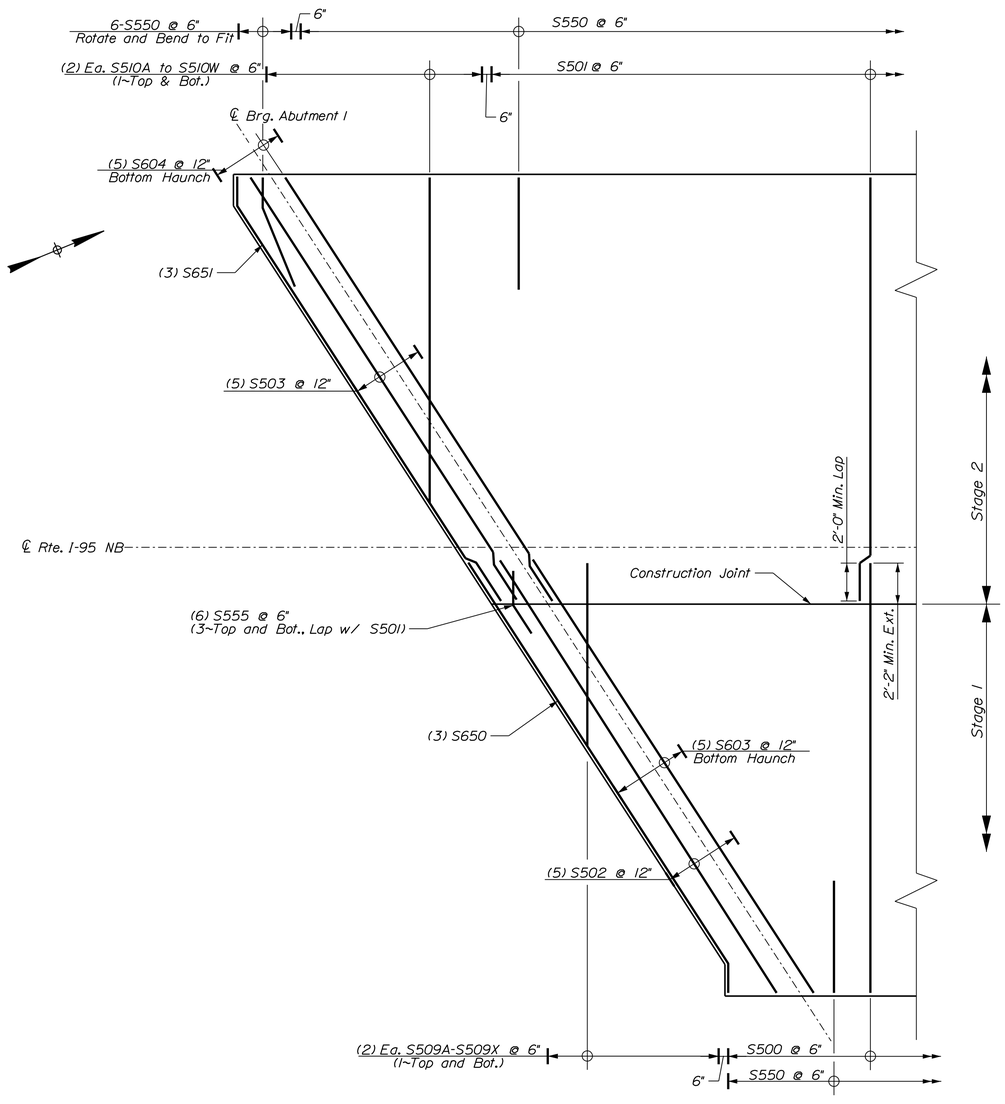

ABUTMENT 1 DECK END DETAIL - BRIDGE #5985

Longitudinal and Curb Bars not Shown for Clarity

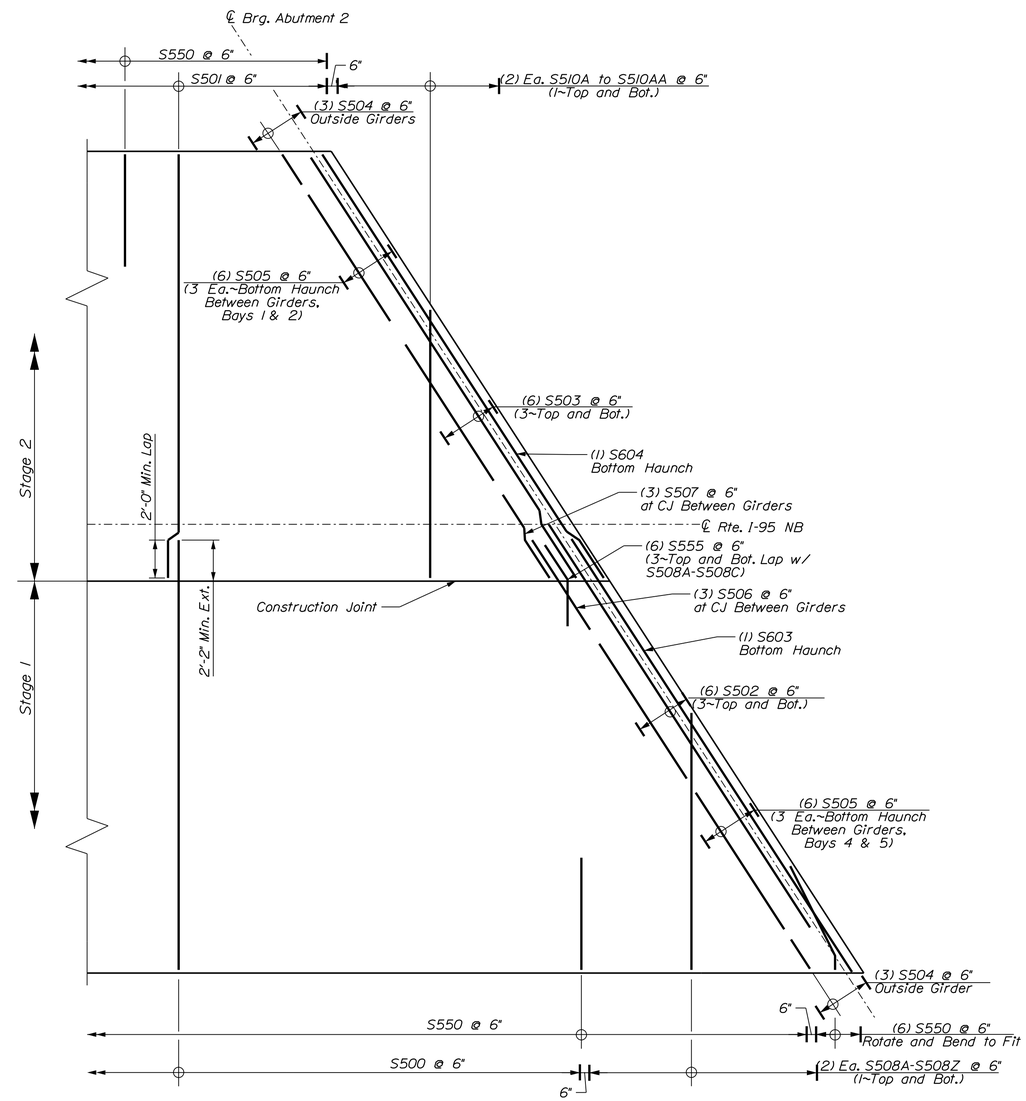

ABUTMENT 2 DECK END DETAIL - BRIDGE #5985

Longitudinal and Curb Bars not Shown for Clarity

STATE OF MAINE
DEPARTMENT OF TRANSPORTATION

PROJECT NO.
25631.06

WIN 25631.06 & 25631.07

BRIDGE NO. 1447 & 5985

BRIDGE PLANS

PROJ. MANAGER	J. BRASK	BY	DATE
DESIGN-DETAILED	S. LINDSLEY	E. MORRISON	06-24
CHECKED-REVIEWED	D. WHITE	B. COLBURN	06-24
DESIGN2-DETAILED2	N. EDMAN	J. FITZ	06-24
DESIGN3-DETAILED3			
REVISIONS 1			
REVISIONS 2			
REVISIONS 3			
REVISIONS 4			
FIELD CHANGES			

SIGNATURE

P.E. NUMBER

DATE

I-95 NB OVER SOMERSET AVE
BRIDGE NO. 5985

PITTSFIELD SOMERSET COUNTY

SUPERSTRUCTURE DETAILS

SHEET NUMBER

44

OF 110

Filename: ...\0xx_Somerset_Deck_Corner_Details.dgn Division: Username: jfitzpatrick Date:6/10/2024

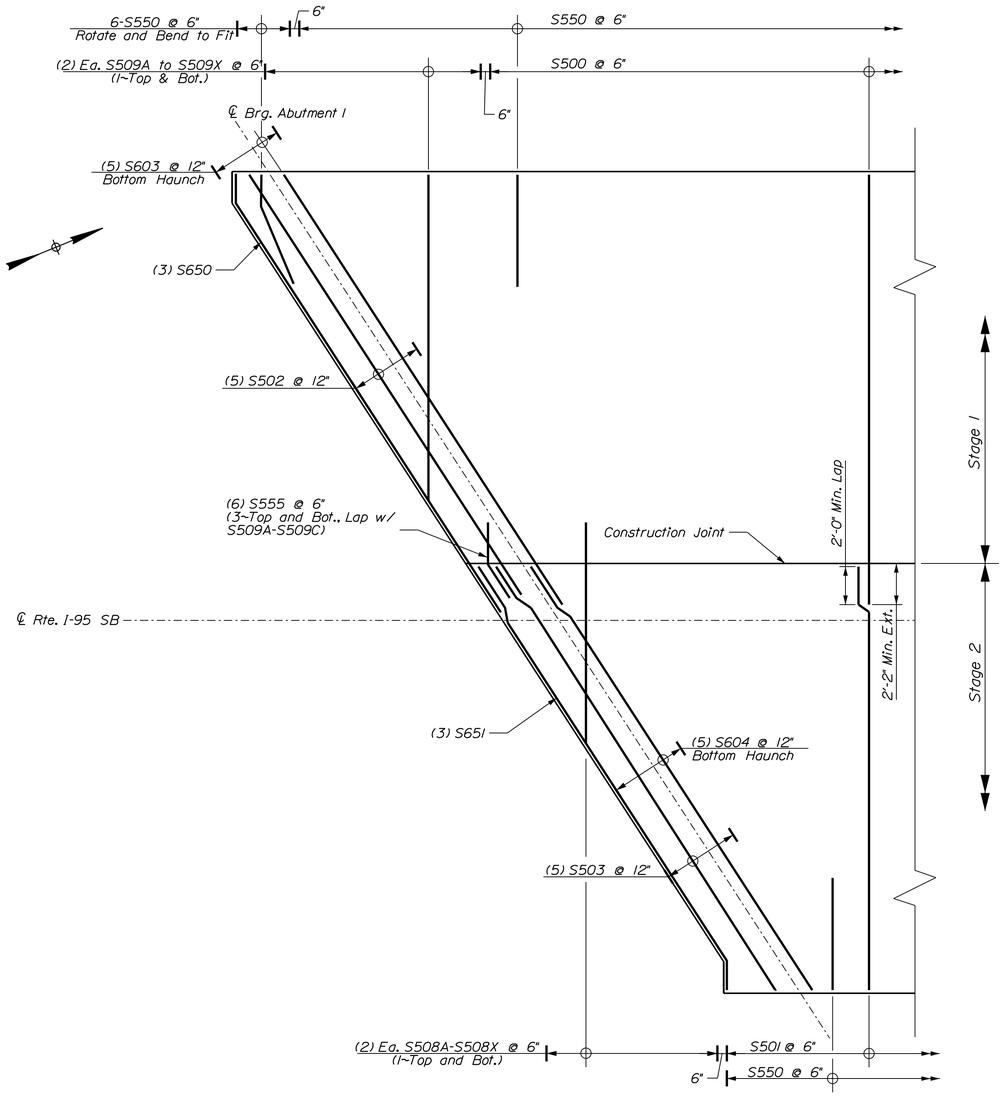

ABUTMENT 1 DECK END DETAIL - BRIDGE #1447

Longitudinal and Curb Bars not Shown for Clarity

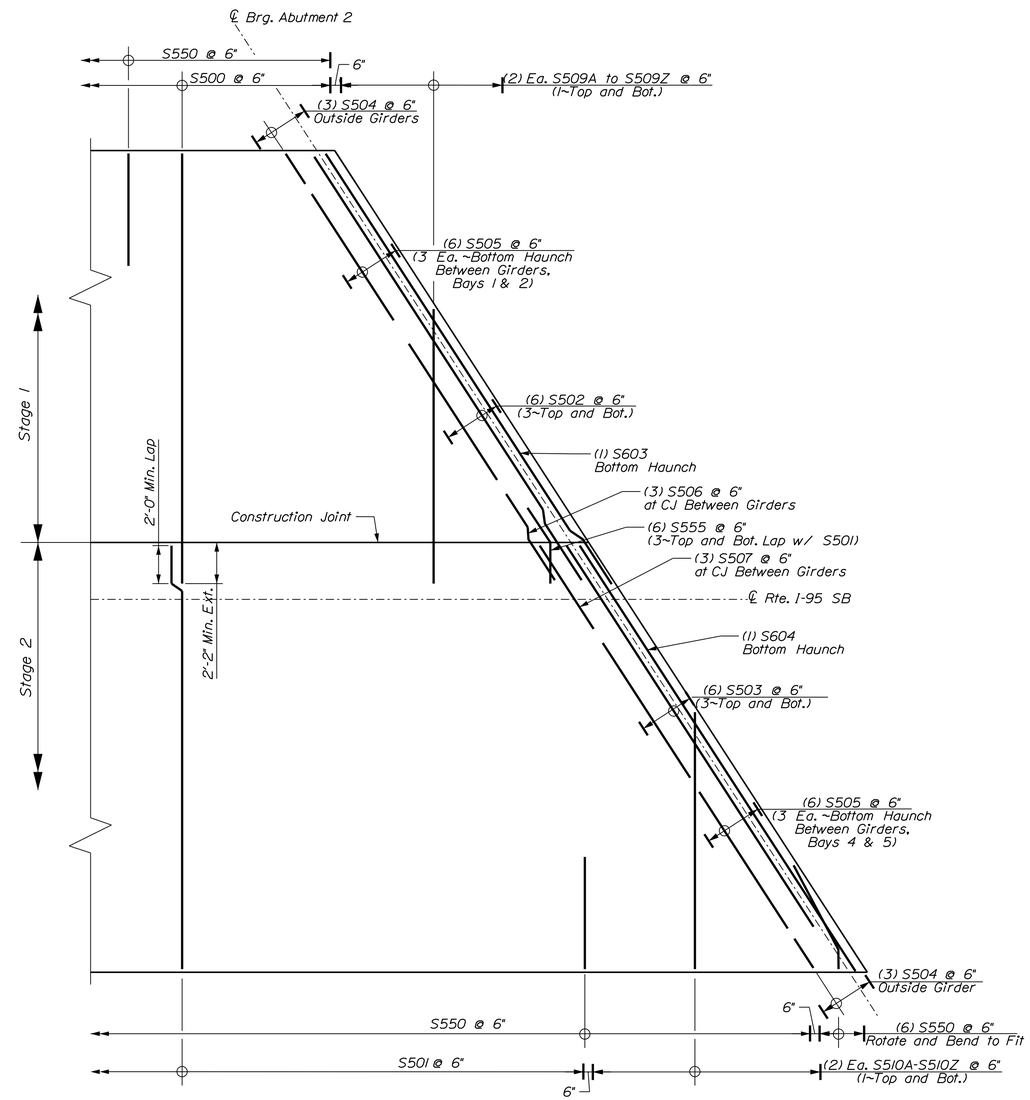

ABUTMENT 2 DECK END DETAIL - BRIDGE #1447

Longitudinal and Curb Bars not Shown for Clarity

STATE OF MAINE
DEPARTMENT OF TRANSPORTATION

PROJECT NO.
25631.06

WIN 25631.06 & 25631.07

BRIDGE NO. 1447 & 5985

BRIDGE PLANS

PROJ. MANAGER	J. BRASK	BY	DATE
DESIGN-DETAILED	S. LINDSLEY	E. MORRISON	06-24
CHECKED-REVIEWED	D. WHITE	B. COLBURN	06-24
DESIGN2-DETAILED2	N. EDMAN	J. FITZ	06-24
DESIGN3-DETAILED3			
REVISIONS 1			
REVISIONS 2			
REVISIONS 3			
REVISIONS 4			
FIELD CHANGES			

SIGNATURE

P.E. NUMBER

DATE

I-95 SB OVER SOMERSET AVE
BRIDGE NO. 1447

PITTSFIELD SOMERSET COUNTY

SUPERSTRUCTURE DETAILS

SHEET NUMBER

45

OF 110

Filename: ...\0xx_Somerset_Deck_Corner_Details 2024.dgn Division: Username: jfitzpatrick Date:6/10/2024

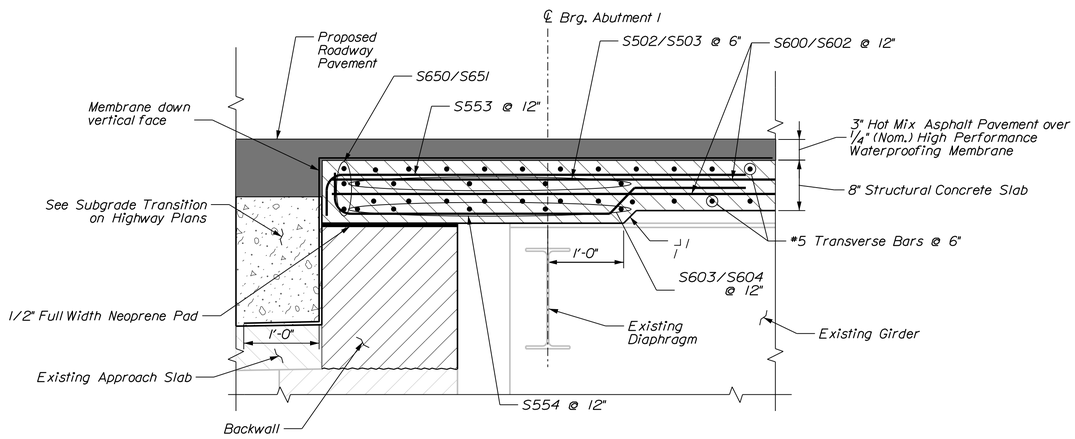

ABUTMENT 1 DECK END SECTION

(PARALLEL TO GIRDER)

Partial Height Backwall Replacement Shown.
Full Height Backwall Replacement Similar

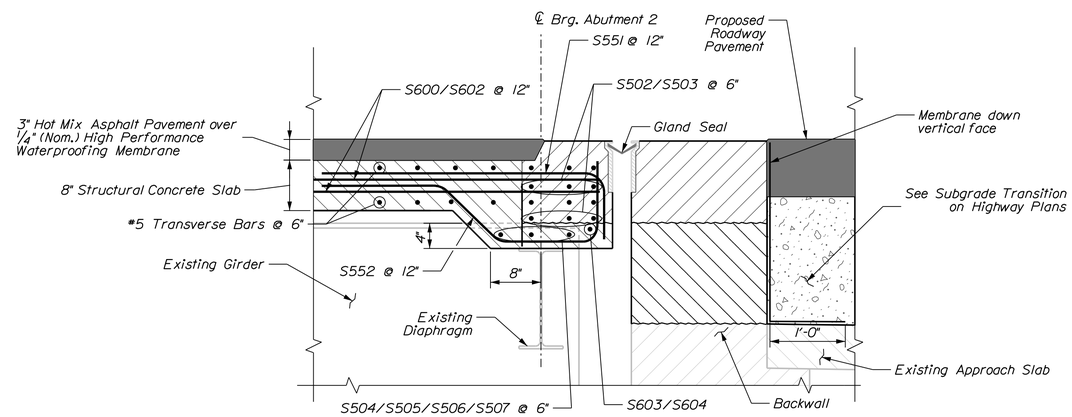

ABUTMENT 2 DECK END SECTION

(PARALLEL TO GIRDER)

Partial Height Backwall Replacement Shown.
Full Height Backwall Replacement Similar

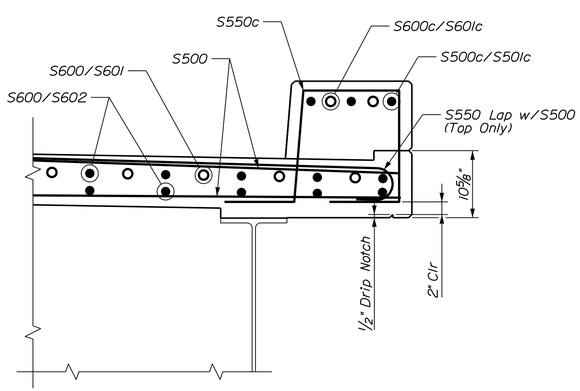

DETAIL A

Right Overhang Shown
Left Overhang Similar

GLAND SEAL NOTES

1. The gland seal to be furnished shall have minimum Movement Ratings as follows:

   Abutment No. 2 = 2 Inches

2. To facilitate staged construction, the sliding cover plate detail for the curbs shall be modified to use countersunk bolts

SUPERSTRUCTURE NOTES

1. Payment for the neoprene pad will be incidental to related Contract Items.

STATE OF MAINE
DEPARTMENT OF TRANSPORTATION

PROJECT NO.
2563106

WIN 25631.06 & 25631.07

BRIDGE NO. 1447 & 5985

BRIDGE PLANS

		BY	DATE
PROJ. MANAGER	J. BRASK		
DESIGN-DETAILED	S. LINDSLEY	E. MORRISON	06-24
CHECKED-REVIEWED	D. WHITE	B. COLBURN	06-24
DESIGN2-DETAILED2	N. EDMAN	J. FITZ	06-24
DESIGN3-DETAILED3			
REVISIONS 1			
REVISIONS 2			
REVISIONS 3			
REVISIONS 4			
FIELD CHANGES			

SIGNATURE

P.E. NUMBER

DATE

I-95 SB & NB OVER SOMERSET AVE
BRIDGE NO. 1447 & 5985
PITTSFIELD SOMERSET COUNTY

SUPERSTRUCTURE DETAILS

SHEET NUMBER
46
OF 110

STRAIGHT BARS

MARK	QTY.	LENGTH	LOCATION
Approach Slabs (Plain Steel)			
AS501	15	15'-7"	AB 1 Stage 2 Transverse
AS502	15	7'-5"	AB 1 Stage 1 Transverse
AS503	15	3'-9"	AB 2 Stage 1 Transverse
AS504	15	10'-11"	AB 2 Stage 2 Transverse
AS601	70	14'-8"	Approach Slab Longitudinal
Superstruture (Low Carbon Chromium)			
S500c	12	60'-0"	Curb Longitudinal
S501c	6	29'-8"	Curb Longitudinal
S600c	8	60'-0"	Curb Longitudinal
S601c	4	11'-4"	Curb Longitudinal
Superstructure (Plain Steel)			
S500	522	22'-8"	Deck Transverse Stage 1
S501	526	22'-4"	Deck Transverse Stage 2
S502	11	26'-8"	Deck End Phase 1
S503	11	26'-8"	Deck End Phase 2
S504	6	2'-1"	Deck End
S505	12	9'-0"	Deck End
S506	3	5'-5"	Deck End
S507	3	5'-6"	Deck End
S508A	2	19'-11"	Deck Transverse Phase 2
S508B	2	19'-2"	Deck Transverse Phase 2
S508C	2	18'-4"	Deck Transverse Phase 2
S508D	2	17'-7"	Deck Transverse Phase 2
S508E	2	16'-10"	Deck Transverse Phase 2
S508F	2	16'-1"	Deck Transverse Phase 2
S508G	2	15'-3"	Deck Transverse Phase 2
S508H	2	14'-6"	Deck Transverse Phase 2
S508J	2	13'-9"	Deck Transverse Phase 2
S508K	2	13'-0"	Deck Transverse Phase 2
S508L	2	12'-2"	Deck Transverse Phase 2
S508M	2	11'-5"	Deck Transverse Phase 2
S508N	2	10'-8"	Deck Transverse Phase 2
S508P	2	9'-11"	Deck Transverse Phase 2
S508Q	2	9'-1"	Deck Transverse Phase 2
S508R	2	8'-4"	Deck Transverse Phase 2
S508S	2	7'-7"	Deck Transverse Phase 2
S508T	2	6'-10"	Deck Transverse Phase 2
S508U	2	6'-0"	Deck Transverse Phase 2
S508V	2	5'-3"	Deck Transverse Phase 2
S508W	2	4'-6"	Deck Transverse Phase 2
S508X	2	3'-9"	Deck Transverse Phase 2
S509A	4	21'-10"	Deck Transverse Phase 1
S509B	4	21'-1"	Deck Transverse Phase 1
S509C	4	20'-3"	Deck Transverse Phase 1
S509D	4	19'-6"	Deck Transverse Phase 1
S509E	4	18'-9"	Deck Transverse Phase 1
S509F	4	18'-0"	Deck Transverse Phase 1
S509G	4	17'-2"	Deck Transverse Phase 1
S509H	4	16'-5"	Deck Transverse Phase 1
S509J	4	15'-8"	Deck Transverse Phase 1
S509K	4	14'-11"	Deck Transverse Phase 1
S509L	4	14'-1"	Deck Transverse Phase 1
S509M	4	13'-4"	Deck Transverse Phase 1
S509N	4	12'-7"	Deck Transverse Phase 1
S509P	4	11'-10"	Deck Transverse Phase 1
S509Q	4	11'-0"	Deck Transverse Phase 1
S509R	4	10'-3"	Deck Transverse Phase 1
S509S	4	9'-6"	Deck Transverse Phase 1
S509T	4	8'-9"	Deck Transverse Phase 1
S509U	4	7'-11"	Deck Transverse Phase 1
S509V	4	7'-2"	Deck Transverse Phase 1
S509W	4	6'-5"	Deck Transverse Phase 1
S509X	4	5'-8"	Deck Transverse Phase 1
S509Y	2	4'-10"	Deck Transverse Phase 1
S509Z	2	4'-1"	Deck Transverse Phase 1
S510A	2	21'-7"	Deck Transverse Phase 2
S510B	2	20'-10"	Deck Tranvserse Phase 2
S510C	2	20'-0"	Deck Tranvserse Phase 2

MARK	QTY.	LENGTH	LOCATION
Superstructure (Plain Steel)			
S510D	2	19'-3"	Deck Transverse Phase 2
S510E	2	18'-6"	Deck Tranvserse Phase 2
S510F	2	17'-9"	Deck Transverse Phase 2
S510G	2	16'-11"	Deck Transverse Phase 2
S510H	2	16'-2"	Deck Tranvserse Phase 2
S510J	2	15'-5"	Deck Transverse Phase 2
S510K	2	14'-8"	Deck Tranvserse Phase 2
S510L	2	13'-10"	Deck Tranvserse Phase 2
S510M	2	13'-1"	Deck Transverse Phase 2
S510N	2	12'-4"	Deck Tranvserse Phase 2
S510P	2	11'-7"	Deck Transverse Phase 2
S510Q	2	10'-9"	Deck Transverse Phase 2
S510R	2	10'-0"	Deck Tranvserse Phase 2
S510S	2	9'-3"	Deck Transverse Phase 2
S510T	2	8'-6"	Deck Transverse Phase 2
S510U	2	7'-8"	Deck Transverse Phase 2
S510V	2	6'-11"	Deck Tranvserse Phase 2
S510W	2	6'-2"	Deck Transverse Phase 2
S510X	2	5'-5"	Deck Tranvserse Phase 2
S510Y	2	4'-7"	Deck Tranvserse Phase 2
S510Z	2	3'-10"	Deck Transverse Phase 2
S600	276	60'-0"	Deck Longitudinal
S601	46	11'-4"	Deck Longitudinal
S602	92	30'-6"	Deck Longitudinal
S603	6	27'-1"	Deck End
S604	6	26'-8"	Deck End
Abutment 1 (Low-Carbon Chromium)			
A500c	10	10'-6"	Right & Left Wingwall Curb
Abutment 1 (Plain Steel)			
A500	3	26'-10"	Backwall Stage 1
A501	3	27'-10"	Backwall Stage 1
A502	3	8'-4"	Backwall Stage 1
A503	3	9'-4"	Backwall Stage 1
A504	22	4'-1"	Backwall Stage 1 & 2
A505	3	24'-8"	Backwall Stage 2
A506	3	25'-5"	Backwall Stage 2
A507	2	16'-7"	Backwall Stage 2
A508	2	17'-1"	Backwall Stage 2
A509	6	3'-8"	Backwall Stage 1 & 2
A510	8	10'-6"	Right & Left Wingwall
A511	16	4'-4"	Right & Left Wingwall
A512	16	4'-1"	Right & Left Wingwall
Abutment 2 (Low-Carbon Chromium)			
B500c	5	12'-4"	Right Wingwall
B501c	5	13'-4"	Left Wingwall
Abutment 2 (Plain Steel)			
B500	4	28'-1"	Backwall Stage 1
B501	4	27'-1"	Backwall Stage 1
B502	4	6'-6"	Backwall Stage 1
B503	4	5'-3"	Backwall Stage 1
B504	17	4'-3"	Backwall Stage 1 & 2
B505	4	25'-5"	Backwall Stage 2
B506	4	26'-5"	Backwall Stage 2
B507	3	10'-5"	Backwall Stage 2
B508	3	11'-4"	Backwall Stage 2
B509	6	3'-8"	Backwall Stage 1 & 2
B510	6	11'-4"	Right Wingwall
B511	6	12'-3"	Right Wingwall
B512	32	5'-5"	Right & Left Wingwall
B513	2	13'-3"	Left Wingwall
B514	2	12'-4"	Left Wingwall
B515	5	5'-3"	Left Wingwall
B516	5	4'-4"	Left Wingwall

BENT BARS

MARK	QTY.	LENGTH	TYPE	A	B	C	D	E	F	G	H	O	R	LOCATION
Superstructure (Low-Carbon Chromium)														
S550c	402	5'-9"	SC	10"	1'-5"	1'-3"	1'-5"			10"		1'-4"		Curb Stirrup
Superstructure (Plain Steel)														
S550	586	6'-6"	J	5'-11"	7"						5"			Deck Overhang
S551	46	4'-8"	L	4'-0"	8"									Deck End
S552	46	4'-11"	SJ	2'-0"	8"	1'-6"	9"	0"						Deck End
S553	46	6'-0"	L	5'-6"	6"									Deck End
S554	46	6'-7"	SJ	2'-0"	5"	3'-8"	6"	0"						Deck End
S555	12	4'-8"	V				2'-4"	2'-4"			1'-3"			Deck Construction Joint
S650	3	26'-7"	V				25'-1"	1'-6"			10"			Deck End Stage 1
S651	3	26'-4"	V				24'-10"	1'-6"			10"			Deck End Stage 2
Abutment 1 (Low-Carbon Chromium)														
A550c	32	4'-6"	HB	4"	8"	1'-3"	8"	1'-3"		4"				Wingwall Curb Stirrup
A551c	64	3'-4"	L	2'-6"	10"									Wingwall Curb
A552c	6	10'-8 1/2"	SJ	3'-10"	3 1/2"	8"	1'-3"	4'-8"						Wingwall Stirrup
Abutment 1 (Plain Steel)														
A550	6	3'-0"	L	2'-0"	1'-0"									Backwall Stage 1
A551	6	3'-1"	L	2'-1"	1'-0"									Backwall Stage 1
A552	6	3'-2"	L	2'-2"	1'-0"									Backwall Stage 1
A553	6	3'-3"	L	2'-3"	1'-0"									Backwall Stage 1
A554	4	3'-4"	L	2'-4"	1'-0"									Backwall Stage 1
A555	4	3'-5"	L	2'-5"	1'-0"									Backwall Stage 1
A556	4	3'-6"	L	2'-6"	1'-0"									Backwall Stage 1
A557	25	6'-10"	U		2'-10"	1'-2"	2'-10"							Backwall Stage 1 & 2
A558	8	4'-3"	V				2'-9"	1'-6"			1'-1"			Backwall Stage 1
A559	16	3'-3"	V				1'-9"	1'-6"			1'-1"			Backwall Stage 2
A560	24	5'-2"	L	4'-4"	10"									Backwall Stage 1 & 2
A561	10	3'-7"	L	2'-7"	1'-0"									Backwall Stage 2
A562	10	3'-8"	L	2'-8"	1'-0"									Backwall Stage 2
A563	4	6'-4"	L	3'-2"	3'-2"									Backwall Stage 1
A564	4	6'-10"	I6	0"	3'-0"	1'-2"	2'-8"				1'-5"	2'-3"		Backwall Stage 2
Abutment 2 (Low-Carbon Chromium)														
B550c	16	4'-6"	HB	4"	8"	1'-3"	8"	1'-3"		4"				Wingwall Curb Stirrup
B551c	32	3'-4"	L	2'-6"	10"									Wingwall Curb
B552c	26	11'-11 1/2"	SJ	4'-5"	3 1/2"	8"	1'-3"	5'-4"						Wingwall Stirrup
Abutment 2 (Plain Steel)														
B550	6	3'-7"	L	2'-7"	1'-0"									Backwall Stage 1
B551	6	3'-8"	L	2'-8"	1'-0"									Backwall Stage 1
B552	6	3'-9"	L	2'-9"	1'-0"									Backwall Stage 1
B553	6	3'-10"	L	2'-10"	1'-0"									Backwall Stage 1
B554	4	3'-11"	L	2'-11"	1'-0"									Backwall Stage 1
B555	4	4'-0"	L	3'-0"	1'-0"									Backwall Stage 1
B556	4	4'-1"	L	3'-1"	1'-0"									Backwall Stage 1
B557	4	4'-2"	L	3'-2"	1'-0"									Backwall Stage 1
B558	15	10'-4"	U		4'-7"	1'-2"	4'-7"							Backwall Stage 1 & 2
B559	4	4'-8"	V				3'-2"	1'-6"			1'-1"			Backwall Stage 1
B560	15	5'-10"	L	5'-0"	10"									Backwall Stage 1 & 2
B561	32	4'-2"	L	3'-2"	1'-0"									Backwall Stage 2
B562	11	3'-10"	V				2'-4"	1'-6"			1'-1"			Backwall Stage 2
B563	6	5'-4"	A				2'-8"	2'-8"			2'-3"			Backwall Stage 1
B564	6	5'-4"	V				2'-8"	2'-8"			2'-3"			Backwall Stage 2
B565	8	3'-4"	L	2'-0"	1'-4"									G4 Pedestal
B566	8	4'-8"	L	2'-0"	2'-8"									G4 Pedestal
B567	8	2'-6"	L	1'-2"	1'-4"									G1 Pedestal
B568	2	3'-0"	L	1'-2"	1'-10"									G1 Pedestal
B569	4	3'-2"	L	1'-2"	2'-0"									G1 Pedestal
B570	1	4'-7"	L	1'-2"	3'-5"									G1 Pedestal
B571	1	4'-5"	L	1'-2"	3'-3"									G1 Pedestal
B572	1	4'-2"	L	1'-2"	3'-0"									G1 Pedestal
B573	1	3'-11"	L	1'-2"	2'-9"									G1 Pedestal

TYPE - BENDING DIAGRAMS

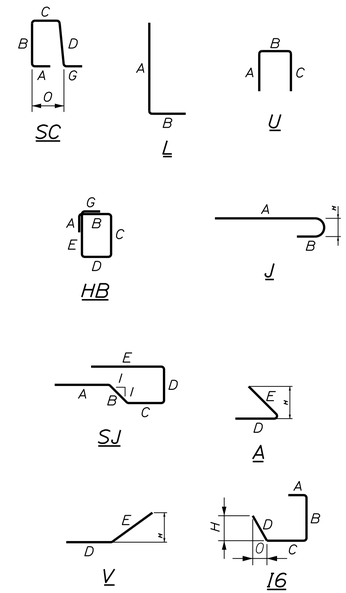

All dimensions are out-to-out of bar.

Bending details and hooks shall conform to the recommendations of the current revision of ACI Standard 315 and ACI Standard 318.

Plain Reinforcing Steel: ASTM A 615, Grade 60
Stainless Steel Reinforcing: ASTM A955, Grade 75
Glass Fiber Reinforced Polymer: ASTM D7957
Low-Carbon Chromium Steel: ASTM A1035, Type CS, Grade 100

GENERAL NOTES

1. The first digit(s) following the letter(s) of the mark indicate the size of the bar:

   Mark "A502" = bar size #5
   Mark "P805" = bar size #8
   Mark "S650" = bar size #6
   Mark "P1404" = bar size #14

2. All reinforcement bars shall be Plain Reinforcing Steel, except in the curbs. Curb reinforcement will be Low-Carbon Chromium Steel as denoted by the lower case letter "c" following the bar number.

   "P510c", c = Low-Carbon Chromium Steel

STATE OF MAINE
DEPARTMENT OF TRANSPORTATION

PROJECT NO. 2563106

WIN 25631.06

BRIDGE NO. 1447

BRIDGE PLANS

		BY	DATE
PROJ. MANAGER		J. BRASK	
DESIGN-DETAILED	S. LINDSLEY	E. MORRISON	06-24
CHECKED-REVIEWED	D. WHITE	B. COLBURN	06-24
DESIGN2-DETAILED2	N. EDMAN	J. FITZ	06-24
DESIGN3-DETAILED3			
REVISIONS 1			
REVISIONS 2			
REVISIONS 3			
REVISIONS 4			
FIELD CHANGES			

SIGNATURE

P.E. NUMBER

DATE

I-95 SB OVER SOMERSET AVE
BRIDGE NO. 1447
PITTSFIELD SOMERSET COUNTY

REINFORCING STEEL SCHEDULE

SHEET NUMBER

47

OF 110

STRAIGHT BARS

MARK	QTY.	LENGTH	LOCATION
Approach Slabs (Plain Steel)			
AS501	15	3'-9"	AB 1 Stage 1 Transverse
AS502	15	7'-5"	AB 1 Stage 2 Transverse
AS503	15	3'-9"	AB 2 Stage 2 Transverse
AS504	15	6'-0"	AB 2 Stage 1 Transverse
AS601	41	14'-8"	Approach Slab Longitudinal
Superstruture (Low Carbon Chromium)			
S500c	12	60'-0"	Curb Longitudinal
S501c	6	29'-8"	Curb Longitudinal
S600c	8	60'-0"	Curb Longitudinal
S601c	4	11'-4"	Curb Longitudinal
Superstructure (Plain Steel)			
S500	526	22'-8"	Deck Transverse Stage 1
S501	524	22'-4"	Deck Transverse Stage 2
S502	11	26'-8"	Deck End Phase 1
S503	11	26'-8"	Deck End Phase 2
S504	6	2'-1"	Deck End
S505	12	9'-0"	Deck End
S506	3	5'-5"	Deck End
S507	3	5'-6"	Deck End
S508A	2	21'-11"	Deck Transverse Phase 1
S508B	2	21'-2"	Deck Transverse Phase 1
S508C	2	20'-4"	Deck Transverse Phase 1
S508D	2	19'-7"	Deck Transverse Phase 1
S508E	2	18'-10"	Deck Transverse Phase 1
S508F	2	18'-1"	Deck Transverse Phase 1
S508G	2	17'-3"	Deck Transverse Phase 1
S508H	2	16'-6"	Deck Transverse Phase 1
S508J	2	15'-9"	Deck Transverse Phase 1
S508K	2	15'-0"	Deck Transverse Phase 1
S508L	2	14'-2"	Deck Transverse Phase 1
S508M	2	13'-5"	Deck Transverse Phase 1
S508N	2	12'-8"	Deck Transverse Phase 1
S508P	2	11'-11"	Deck Transverse Phase 1
S508Q	2	11'-1"	Deck Transverse Phase 1
S508R	2	10'-4"	Deck Transverse Phase 1
S508S	2	9'-7"	Deck Transverse Phase 1
S508T	2	8'-10"	Deck Transverse Phase 1
S508U	2	8'-0"	Deck Transverse Phase 1
S508V	2	7'-3"	Deck Transverse Phase 1
S508W	2	6'-6"	Deck Transverse Phase 1
S508X	2	5'-9"	Deck Transverse Phase 1
S508Y	2	4'-11"	Deck Transverse Phase 1
S508Z	2	4'-2"	Deck Transverse Phase 1
S509A	2	20'-4"	Deck Transverse Phase 1
S509B	2	19'-7"	Deck Transverse Phase 1
S509C	2	18'-9"	Deck Transverse Phase 1
S509D	2	18'-0"	Deck Transverse Phase 1
S509E	2	17'-3"	Deck Transverse Phase 1
S509F	2	16'-6"	Deck Transverse Phase 1
S509G	2	15'-8"	Deck Transverse Phase 1
S509H	2	14'-11"	Deck Transverse Phase 1
S509J	2	14'-2"	Deck Transverse Phase 1
S509K	2	13'-5"	Deck Transverse Phase 1
S509L	2	12'-7"	Deck Transverse Phase 1
S509M	2	11'-10"	Deck Transverse Phase 1
S509N	2	11'-1"	Deck Transverse Phase 1
S509P	2	10'-4"	Deck Transverse Phase 1
S509Q	2	9'-6"	Deck Transverse Phase 1
S509R	2	8'-9"	Deck Transverse Phase 1
S509S	2	8'-0"	Deck Transverse Phase 1
S509T	2	7'-3"	Deck Transverse Phase 1
S509U	2	6'-5"	Deck Transverse Phase 1
S509V	2	5'-8"	Deck Transverse Phase 1
S509W	2	4'-11"	Deck Transverse Phase 1
S509X	2	4'-2"	Deck Transverse Phase 1
S510A	4	21'-7"	Deck Transverse Phase 2
S510B	4	20'-10"	Deck Tranvserse Phase 2
S510C	4	20'-0"	Deck Tranvserse Phase 2

MARK	QTY.	LENGTH	LOCATION
Superstructure (Plain Steel)			
S510D	4	19'-3"	Deck Transverse Phase 2
S510E	4	18'-6"	Deck Tranvserse Phase 2
S510F	4	17'-9"	Deck Tranvserse Phase 2
S510G	4	16'-11"	Deck Transverse Phase 2
S510H	4	16'-2"	Deck Tranvserse Phase 2
S510J	4	15'-5"	Deck Transverse Phase 2
S510K	4	14'-8"	Deck Tranvserse Phase 2
S510L	4	13'-10"	Deck Tranvserse Phase 2
S510M	4	13'-1"	Deck Transverse Phase 2
S510N	4	12'-4"	Deck Tranvserse Phase 2
S510P	4	11'-7"	Deck Transverse Phase 2
S510Q	4	10'-9"	Deck Tranvserse Phase 2
S510R	4	10'-0"	Deck Tranvserse Phase 2
S510S	4	9'-3"	Deck Tranvserse Phase 2
S510T	4	8'-6"	Deck Tranvserse Phase 2
S510U	4	7'-8"	Deck Transverse Phase 2
S510V	4	6'-11"	Deck Tranvserse Phase 2
S510W	4	6'-2"	Deck Tranvserse Phase 2
S510X	2	5'-5"	Deck Tranvserse Phase 2
S510Y	2	4'-7"	Deck Tranvserse Phase 2
S510Z	2	3'-10"	Deck Tranvserse Phase 2
S510AA	2	3'-1"	Deck Tranvserse Phase 2
S600	276	60'-0"	Deck Longitudinal
S601	46	11'-4"	Deck Longitudinal
S602	92	30'-6"	Deck Longitudinal
S603	6	27'-1"	Deck End
S604	6	26'-8"	Deck End
Abutment 1 (Low-Carbon Chromium)			
A500c	10	10'-6"	Right & Left Wingwall Curb
Abutment 1 (Plain Steel)			
A500	3	26'-4"	Backwall Stage 1
A501	3	27'-1"	Backwall Stage 1
A502	2	4'-10"	Backwall Stage 1
A503	2	5'-3"	Backwall Stage 1
A504	10	3'-11"	Backwall Stage 1 & 2
A505	3	25'-5"	Backwall Stage 2
A506	3	26'-5"	Backwall Stage 2
A507	3	8'-3"	Backwall Stage 2
A508	3	9'-7"	Backwall Stage 2
A509	6	3'-8"	Backwall Stage 1 & 2
A510	8	10'-7"	Right & Left Wingwall
A511	8	4'-4"	Left Wingwall
A512	8	12'-4"	Right Wingwall
A513	34	4'-0"	Right & Left Wingwall
Abutment 2 (Low-Carbon Chromium)			
B500c	5	12'-4"	Right Wingwall
B501c	5	13'-4"	Left Wingwall
Abutment 2 (Plain Steel)			
B500	3	27'-1"	Backwall Stage 1
B501	3	28'-1"	Backwall Stage 1
B502	3	6'-6"	Backwall Stage 1
B503	3	7'-10"	Backwall Stage 1
B504	12	3'-11"	Backwall Stage 1 & 2
B505	3	26'-5"	Backwall Stage 2
B506	3	25'-5"	Backwall Stage 2
B507	4	6'-7"	Backwall Stage 2
B508	4	5'-4"	Backwall Stage 2
B509	6	3'-8"	Backwall Stage 1 & 2
B510	2	11'-4"	Right Wingwall
B511	2	12'-4"	Right Wingwall
B512	5	3'-4"	Right Wingwall
B513	5	4'-4"	Right Wingwall
B514	14	4'-4"	Right and Left Wingwall
B515	2	13'-3"	Left Wingwall
B516	2	12'-4"	Left Wingwall
B517	5	5'-4"	Left Wingwall
B518	5	4'-4"	Left Wingwall

BENT BARS

MARK	QTY.	LENGTH	TYPE	A	B	C	D	E	F	G	H	O	R	LOCATION
Superstructure (Low-Carbon Chromium)														
S550c	402	5'-9"	SC	10"	1'-5"	1'-3"	1'-5"			10"		1'-4"		Curb Stirrup
Superstructure (Plain Steel)														
S550	586	6'-6"	J	5'-11"	7"						5"			Deck Overhang
S551	46	4'-8"	L	4'-0"	8"									Deck End
S552	46	4'-11"	SJ	2'-0"	8"	1'-6"	9"	0"						Deck End
S553	46	6'-0"	L	5'-6"	6"									Deck End
S554	46	6'-7"	SJ	2'-0"	5"	3'-8"	6"	0"						Deck End
S555	12	4'-8"	V				2'-4"	2'-4"			1'-3"			Deck Construction Joint
S650	3	26'-7"	V				25'-1"	1'-6"			10"			Deck End Stage 1
S651	3	26'-4"	V				24'-10"	1'-6"			10"			Deck End Stage 2
Abutment 1 (Low-Carbon Chromium)														
A550c	16	4'-6"	HB	4"	8"	1'-3"	8"	1'-3"		4"				Wingwall Curb Stirrup
A551c	32	3'-4"	L	2'-6"	10"									Wingwall Curb
A552c	21	10'-2 1/2"	SJ	3'-7"	3 1/2"	8"	1'-3"	4'-5"						Wingwall Stirrup
Abutment 1 (Plain Steel)														
A550	4	3'-6"	V				2'-0"	1'-6"			1'-1"			Backwall Stage 1
A551	12	5'-2"	L	4'-4"	10"									Backwall Stage 1 & 2
A552	40	3'-5"	L	2'-5"	1'-0"									Backwall Stage 1
A553	5	6'-10"	U		2'-10"	1'-2"	2'-10"							Backwall Stage 1
A554	6	3'-0"	L	2'-0"	1'-0"									Backwall Stage 2
A555	6	3'-1"	L	2'-1"	1'-0"									Backwall Stage 2
A556	6	3'-2"	L	2'-2"	1'-0"									Backwall Stage 2
A557	6	3'-3"	L	2'-3"	1'-0"									Backwall Stage 2
A558	6	3'-4"	L	2'-4"	1'-0"									Backwall Stage 2
A559	8	3'-5"	L	2'-5"	1'-0"									Backwall Stage 2
A560	8	6'-10"	U		2'-10"	1'-2"	2'-10"							Backwall Stage 2
A561	8	4'-3"	V				2'-9"	1'-6"			1'-1"			Backwall Stage 2
A562	4	6'-4"	L	3'-2"	3'-2"									Backwall Stage 2
A563	4	6'-10"	I6	0"	3'-0"	1'-2"	2'-8"				1'-5"	2'-3"		Backwall Stage 1
Abutment 2 (Low-Carbon Chromium)														
B550c	32	4'-6"	HB	4"	8"	1'-3"	8"	1'-3"		4"				Wingwall Curb Stirrup
B551c	64	3'-4"	L	2'-6"	10"									Wingwall Curb
B552c	11	11'-9 1/2"	SJ	4'-4"	3 1/2"	8"	1'-3"	5'-3"						Wingwall Stirrup
Abutment 2 (Plain Steel)														
B550	38	4'-0"	L	3'-0"	1'-0"									Backwall Stage 1
B551	6	4'-0"	V				2'-6"	1'-6"			1'-1"			Backwall Stage 1
B552	6	3'-6"	L	2'-6"	1'-0"									Backwall Stage 2
B553	6	3'-7"	L	2'-7"	1'-0"									Backwall Stage 2
B554	6	3'-8"	L	2'-8"	1'-0"									Backwall Stage 2
B555	6	3'-9"	L	2'-9"	1'-0"									Backwall Stage 2
B556	6	3'-10"	L	2'-10"	1'-0"									Backwall Stage 2
B557	6	3'-11"	L	2'-11"	1'-0"									Backwall Stage 2
B558	8	4'-0"	L	3'-0"	1'-0"									Backwall Stage 2
B559	11	10'-2"	U		4'-6"	1'-2"	4'-6"							Backwall Stage 1 & 2
B560	4	4'-8"	V				3'-2"	1'-6"			1'-1"			Backwall Stage 2
B561	8	5'-8"	L	4'-10"	10"									Backwall Stage 1 & 2
B562	6	5'-4"	A				2'-8"	2'-8"			2'-3"			Backwall Stage 1
B563	6	4'-10"	V				2'-2"	2'-8"			2'-3"			Backwall Stage 2

TYPE - BENDING DIAGRAMS

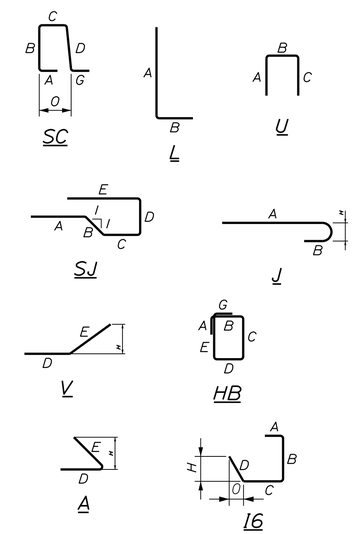

All dimensions are out-to-out of bar.

Bending details and hooks shall conform to the recommendations of the current revision of ACI Standard 315 and ACI Standard 318.

Plain Reinforcing Steel: ASTM A 615, Grade 60
Stainless Steel Reinforcing: ASTM A955, Grade 75
Glass Fiber Reinforced Polymer: ASTM D7957
Low-Carbon Chromium Steel: ASTM A1035, Type CS, Grade 100

GENERAL NOTES

1. The first digit(s) following the letter(s) of the mark indicate the size of the bar:

   Mark "A502" = bar size #5
   Mark "P805" = bar size #8
   Mark "S650" = bar size #6
   Mark "P1404" = bar size #14

2. All reinforcement bars shall be Plain Reinforcing Steel, except in the curbs. Curb reinforcement will be Low-Carbon Chromium Steel as denoted by the lower case letter "c" following the bar number.

   "P510c", c = Low-Carbon Chromium Steel

STATE OF MAINE
DEPARTMENT OF TRANSPORTATION

PROJECT NO. 2563106

WIN 25631.07

BRIDGE PLANS

BRIDGE NO. 5985

		BY	DATE
PROJ. MANAGER	J. BRASK		
DESIGN-DETAILED	S. LINDSLEY	E. MORRISON	06-24
CHECKED-REVIEWED	D. WHITE	B. COLBURN	06-24
DESIGN2-DETAILED2	N. EDMAN	J. FITZ	06-24
DESIGN3-DETAILED3			
REVISIONS 1			
REVISIONS 2			
REVISIONS 3			
REVISIONS 4			
FIELD CHANGES			

SIGNATURE

P.E. NUMBER

DATE

I-95 NB OVER SOMERSET AVE
BRIDGE NO. 5985
PITTSFIELD SOMERSET COUNTY

REINFORCING STEEL SCHEDULE

SHEET NUMBER

48

OF 110

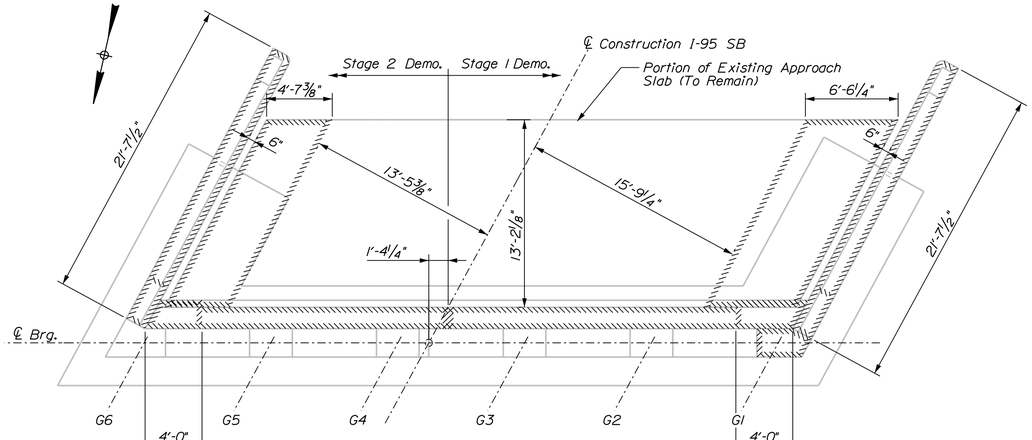

ABUTMENT 1 DEMOLITION PLAN

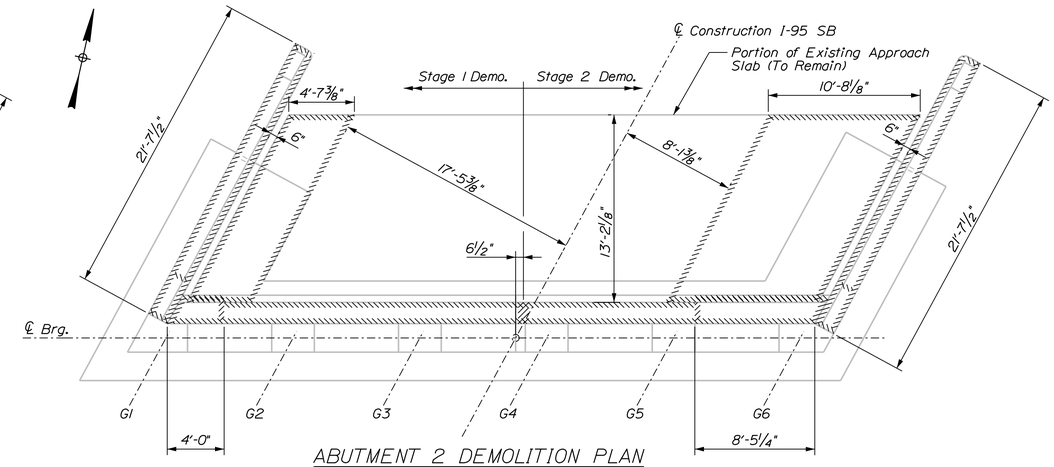

ABUTMENT 2 DEMOLITION PLAN

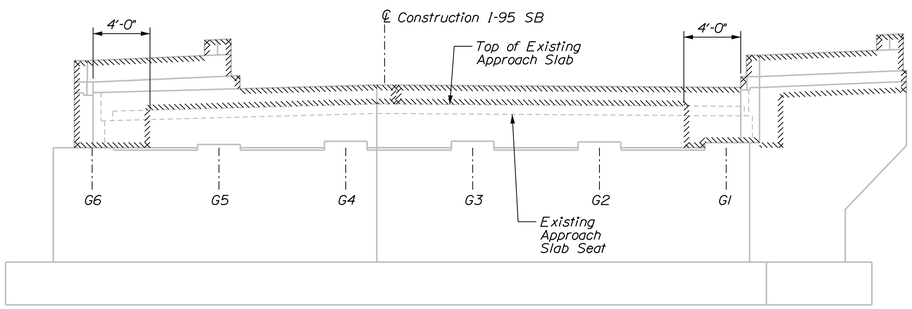

ABUTMENT 1 DEMOLITION ELEVATION

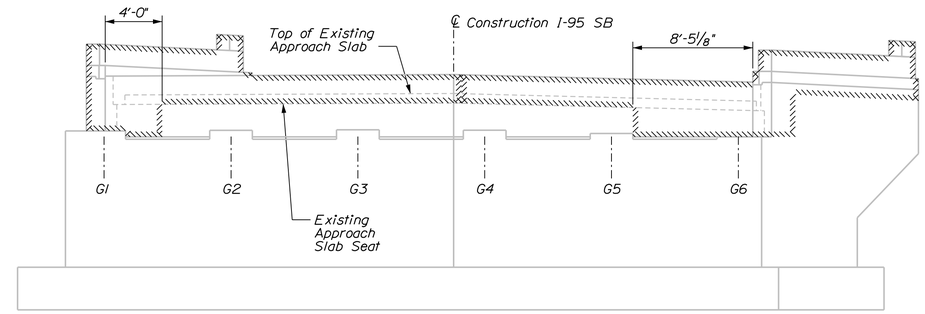

ABUTMENT 2 DEMOLITION ELEVATION

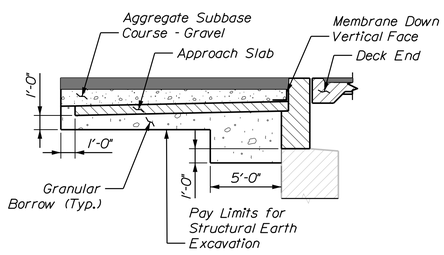

ABUTMENT 1
FULL HEIGHT BACKWALL REPLACMENT
BACKFILL DETAIL

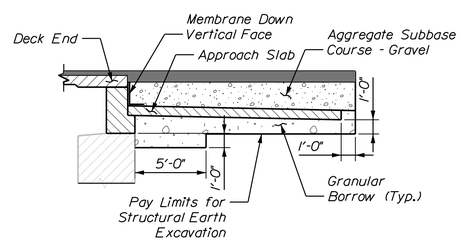

ABUTMENT 2
FULL HEIGHT BACKWALL REPLACMENT
BACKFILL DETAIL

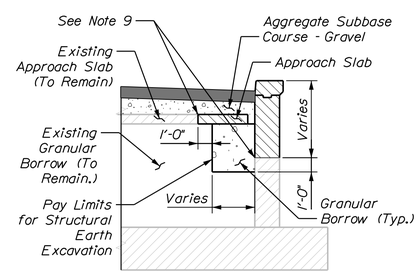

WINGWALL EARTHWORK DETAIL

Abutment 1 Shown, Abutment 2 Similar

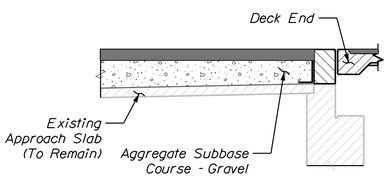

ABUTMENT 1
PARTIAL HEIGHT BACKWALL REPLACMENT
BACKFILL DETAIL

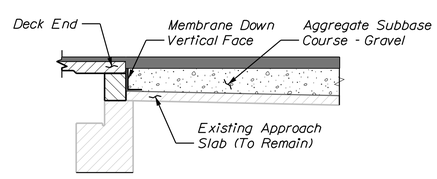

ABUTMENT 2
PARTIAL HEIGHT BACKWALL REPLACMENT
BACKFILL DETAIL

ABUTMENT AND WINGWALL MODIFICATION NOTES

1. The Contractor shall use care not to damage any existing reinforcing steel which is to remain. Any damaged reinforcing steel shall be replaced as directed by the Resident at no expense to the Department.
2. Before drilling and grouting new reinforcing steel, the Contractor shall locate reinforcing steel in existing concrete by non-destructive methods to avoid conflicts. All costs associated with this work shall be incidental to related Contract Items.
3. Reinforcing steel shall have 2 inches cover unless otherwise noted.
4. Existing abutment and wingwall concrete to be removed as shown on the plans shall be sawcut 1 inch deep prior to removal of existing concrete. All costs associated with this work shall be incidental to related Contract Items.
5. Where drilling and anchoring of reinforcement is required, the Contractor shall use a material listed on the Maine Department of Transportation Qualified Products List of Concrete Adhesive Anchor Systems. The depth of embedment shall be sufficient to develop 125% of the yield strength of the bar per the manufacturer's recommendations or 12 inches, whichever is greater. Proposed anchoring material and embedment depth shall be submitted for approval. Payment for drilling and anchoring will be incidental to related Contract items.
6. Dimensions and layout shown are based on available as-built drawings. Contractor shall field verify all dimensions prior to any related work.
7. All surfaces to be rehabilitated shall be clean of all debris and foreign material and shall be roughened to the 1/2" amplitude prior to placement of the new concrete. Payment shall be incidental to related concrete items.
8. Projecting reinforcing that can be maintained, in addition to that shown in the details, may be left in place at Contractor's discretion.
9. Cover abutment backwall, wingwall, and approach slab joints where waterstops are not required in accordance with Standard Details Section 502.

STATE OF MAINE
DEPARTMENT OF TRANSPORTATION

PROJECT NO.
2563106

WIN 25631.08

BRIDGE NO. 1449

BRIDGE PLANS

PROJ. MANAGER	J. BRASK	BY	DATE
DESIGN-DETAILED	S. LINDSLEY	E. MORRISON	06-24
CHECKED-REVIEWED	D. WHITE	B. COLBURN	06-24
DESIGN2-DETAILED2	N. EDMAN	J. FITZ	06-24
DESIGN3-DETAILED3			
REVISIONS 1			
REVISIONS 2			
REVISIONS 3			
REVISIONS 4			
FIELD CHANGES			

SIGNATURE

P.E. NUMBER

DATE

I-95 SB OVER WEBB RD
BRIDGE NO. 1449

PITTSFIELD SOMERSET COUNTY

ABUTMENT DEMOLITION
(BR. NO. 1449)

SHEET NUMBER

49

OF 110

Filename: ...\0xx_Webb_Br 1449_Abut Demo.dgn Division: Username: jfitzpatrick Date:6/10/2024

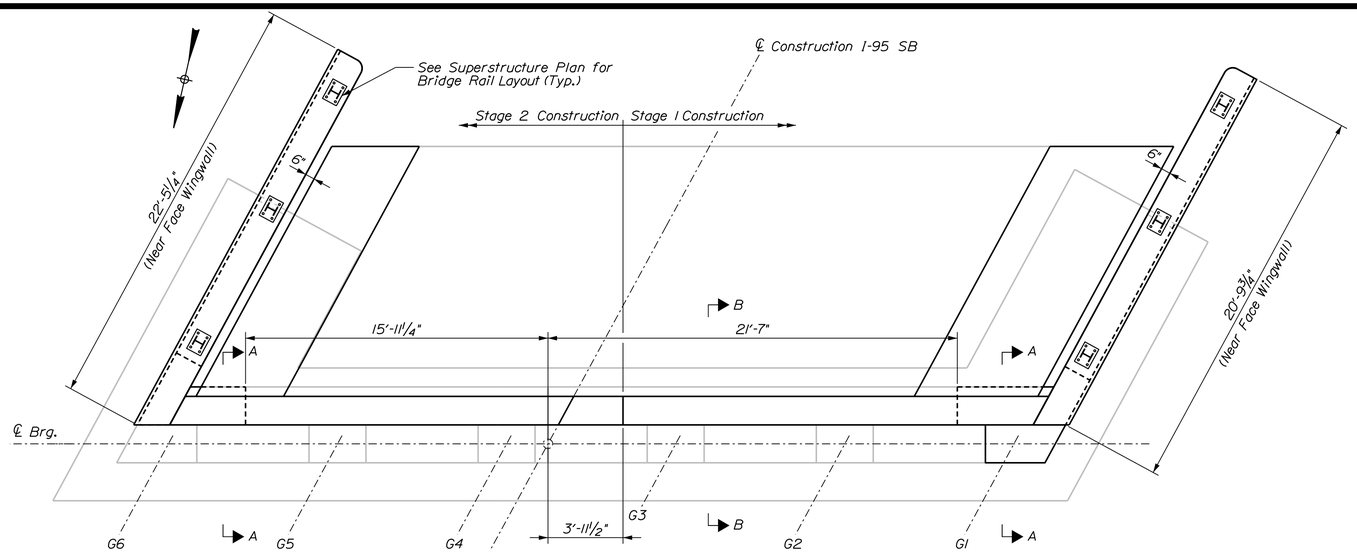

ABUTMENT 1 CONSTRUCTION PLAN

For Abutment Demo and Construction Sections, See Sheet 52

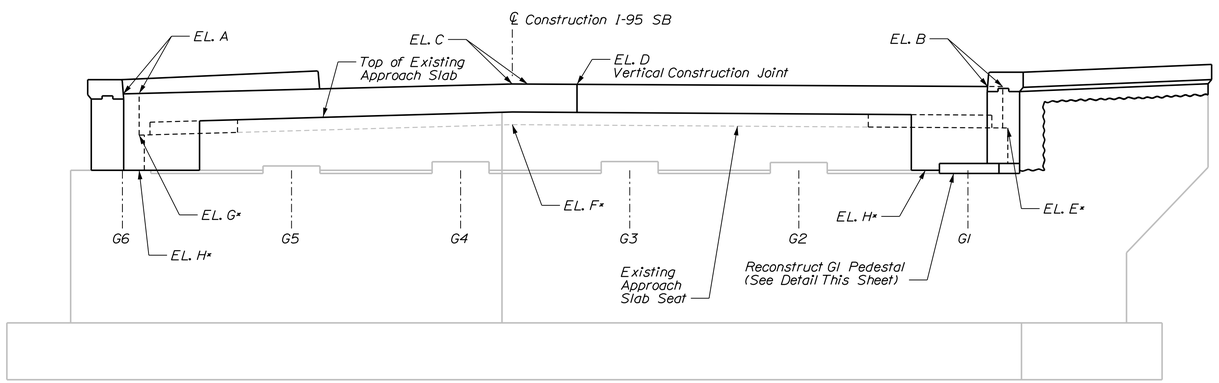

ABUTMENT 1 CONSTRUCTION ELEVATION

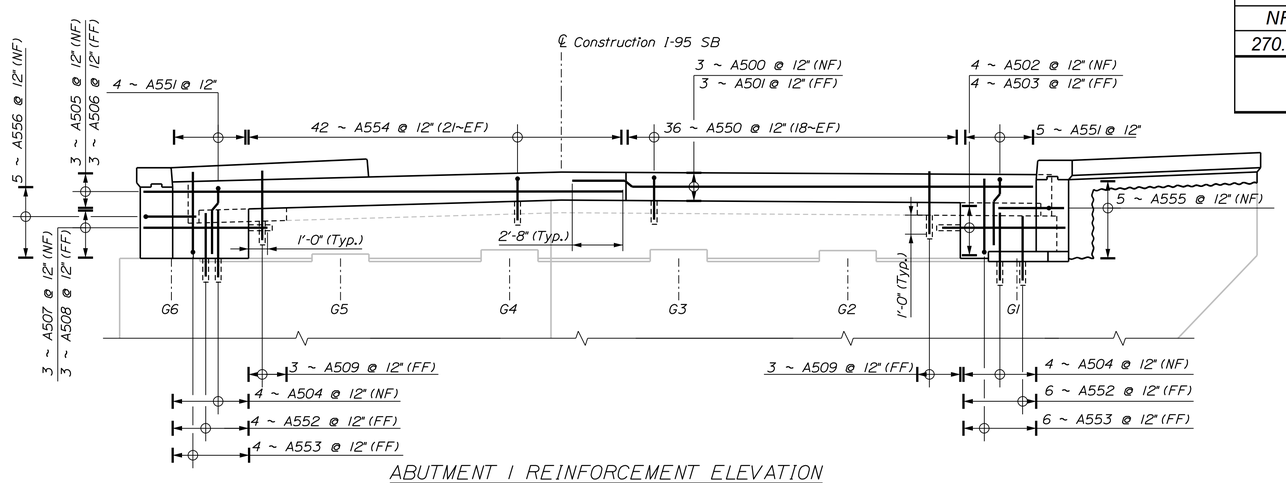

ABUTMENT 1 REINFORCEMENT ELEVATION

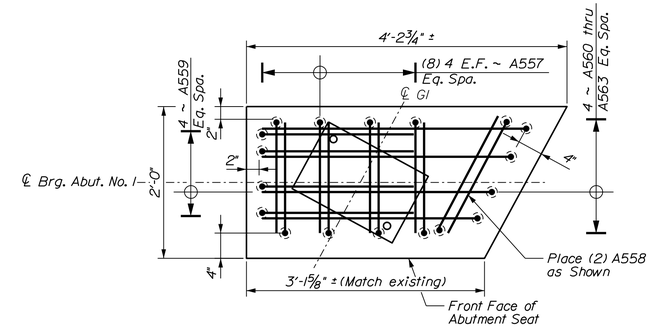

PLAN

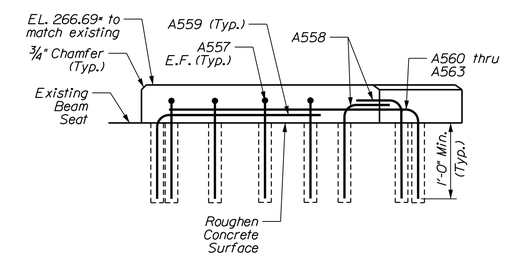

ELEVATION

PEDESTAL G1 REINFORCING DETAIL

*Space bars to avoid conflict with bearing anchor rods

Bridge #1449 Abutment 1 Elevations											
EL. A		EL. B		EL. C		EL. D		EL. E*	EL. F*	EL. G*	EL. H*
NF	FF	NF	FF	NF	FF	NF	FF				
270.36	270.40	270.75	270.79	270.88	270.92	270.87	270.91	268.57	268.74	268.20	266.33
NF = Near Face FF= Far Face * Elevations provided are approximated from the existing bridge plans. To be field verified.											

CONCRETE REPAIR NOTES

1. The quantity of concrete repairs and reinforcing layout on these drawings are based on visual inspection. The Contractor shall match those repair limits as closely as possible except with the approval of the Resident.
2. No repairs are anticipated for substructure units not shown. The Contractor and the Resident shall verify that no work is required.
3. The Department must approve changes in quantity beyond what is shown or assumed.
4. All broken or corroded reinforcing bars shall be supplemented in accordance with Standard Specification Section 518.04. Supplemental reinforcing shall maintain a clear cover of 2" minimum. Supplemental bars shall be paid for under Pay Items 503.19 and 503.20.

STATE OF MAINE
DEPARTMENT OF TRANSPORTATION
PROJECT NO. 25631.06
WIN 25631.08
BRIDGE NO. 1449
BRIDGE PLANS

PROJ. MANAGER	J. BRASK		
DESIGN-DETAILED	S. LINDSLEY	E. MORRISON	06-24
CHECKED-REVIEWED	D. WHITE	B. COLBURN	06-24
DESIGN2-DETAILED2	N. EDMAN	J. FITZ	06-24
DESIGN3-DETAILED3			
REVISIONS 1			
REVISIONS 2			
REVISIONS 3			
REVISIONS 4			
FIELD CHANGES			

SIGNATURE
P.E. NUMBER
DATE

I-95 SB OVER WEBB RD
BRIDGE NO. 1449
PITTSFIELD SOMERSET COUNTY

ABUTMENT 1 CONSTRUCTION (BR. NO. 1449)

SHEET NUMBER
50
OF 110

Filename: ...\0xx_Webb_Br 1449_Abut 1_Construction.dgn
Division:
Username: jfitzpatrick
Date:6/10/2024

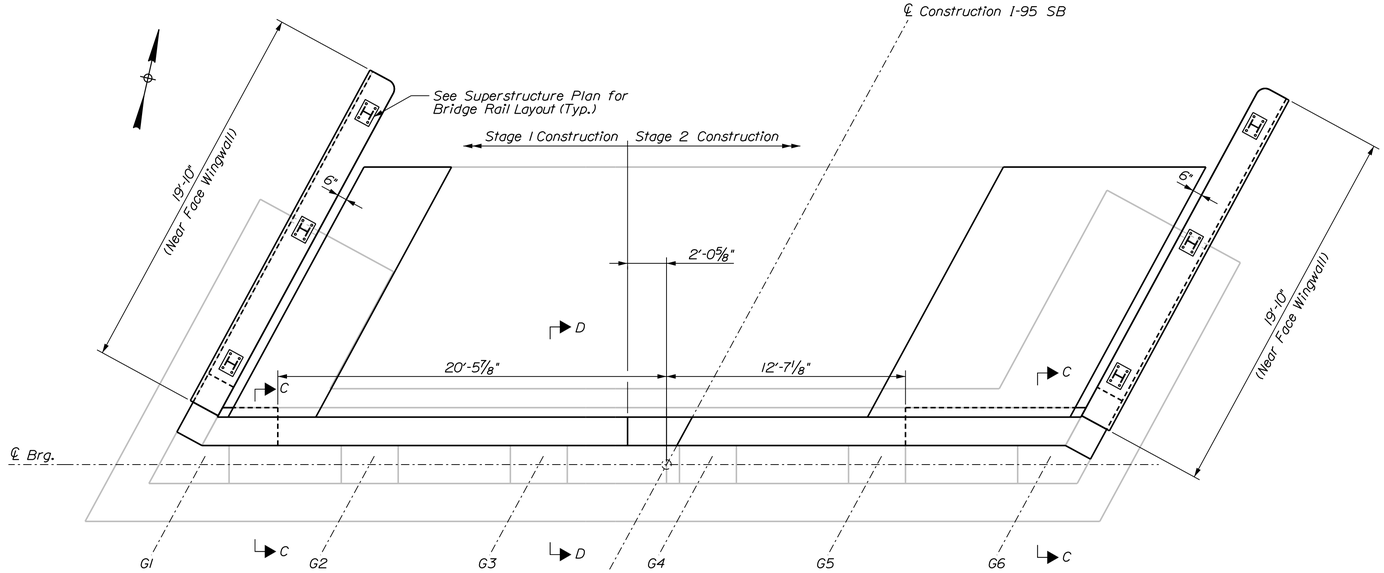

ABUTMENT 2 CONSTRUCTION PLAN

For Abutment Demo and Construction Sections, See Sheet 52

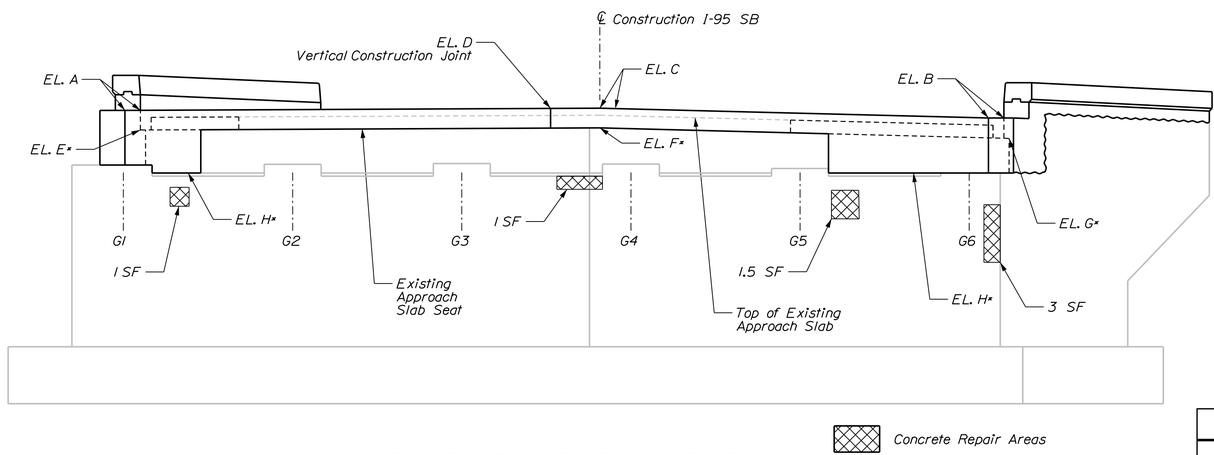

ABUTMENT 2 CONSTRUCTION ELEVATION

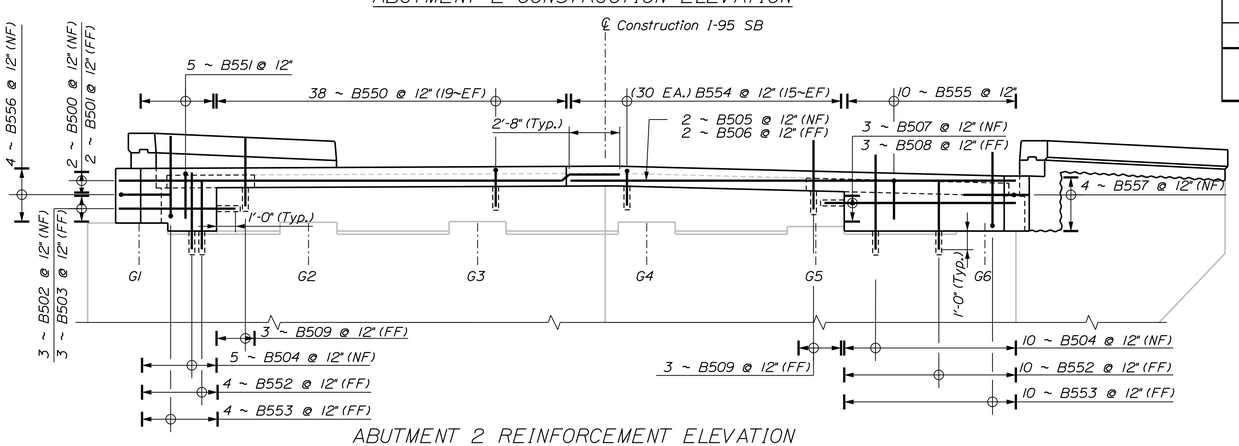

ABUTMENT 2 REINFORCEMENT ELEVATION

Bridge #1449 Abutment 2 Elevations											
EL. A		EL. B		EL. C		EL. D		EL. E*	EL. F*	EL. G*	EL. H*
NF	FF	NF	FF	NF	FF	NF	FF				
266.75	266.71	266.36	266.32	266.88	266.84	266.86	266.82	265.72	265.83	265.30	263.45

NF = Near Face FF= Far Face

* Elevations provided are approximated from the existing bridge plans. To be field verified.

STATE OF MAINE
DEPARTMENT OF TRANSPORTATION

PROJECT NO.
25631.06

WIN 25631.08

BRIDGE NO. 1449

BRIDGE PLANS

		BY	DATE
PROJ. MANAGER	J. BRASCH		
DESIGN-DETAILED	S. LINDSLEY	E. MORRISON	06-24
CHECKED-REVIEWED	D. WHITE	B. COLBURN	06-24
DESIGN2-DETAILED2	N. EDMAN	J. FITZ	06-24
DESIGN3-DETAILED3			
REVISIONS 1			
REVISIONS 2			
REVISIONS 3			
REVISIONS 4			
FIELD CHANGES			

SIGNATURE

P.E. NUMBER

DATE

I-95 SB OVER WEBB RD
BRIDGE NO. 1449

PITTSFIELD SOMERSET COUNTY

ABUTMENT 2 CONSTRUCTION
(BR. NO. 1449)

SHEET NUMBER

51

OF 110

Filename: ...\0xx_Webb_Br 1449_Abut 2_Construction.dgn Division: Username: jfitzpatrick Date:6/10/2024

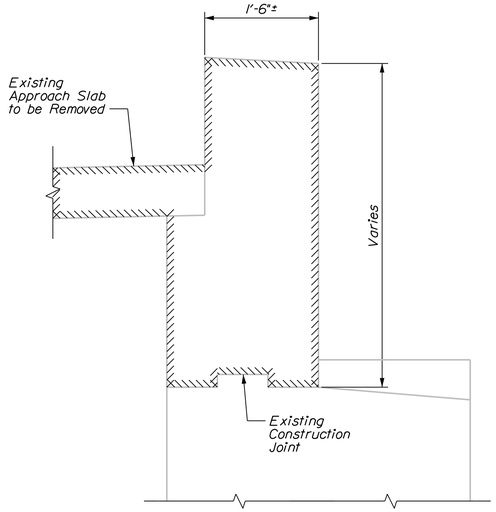

ABUTMENT 1 DEMOLITION SECTION
(SECTION A-A)

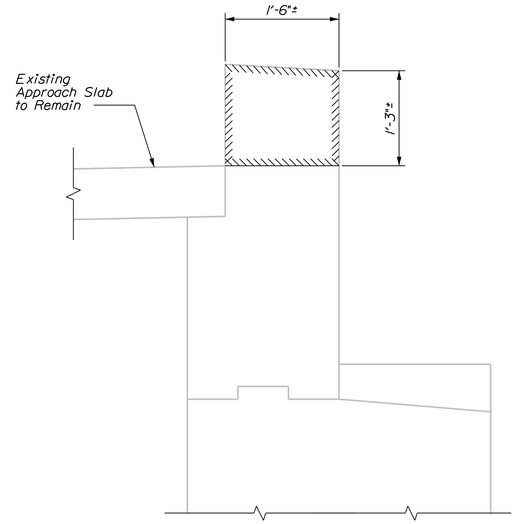

ABUTMENT 1 DEMOLITION SECTION
(SECTION B-B)

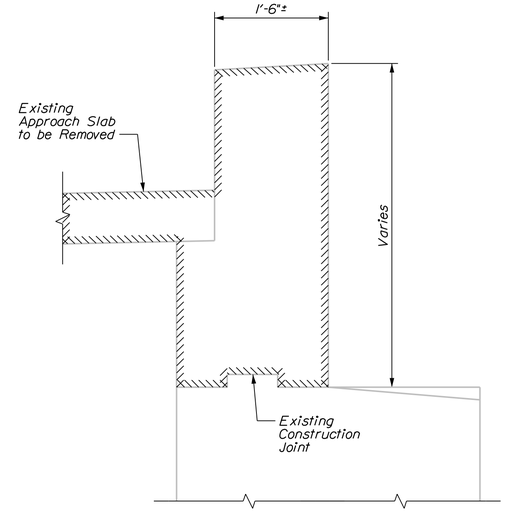

ABUTMENT 2 DEMOLITION SECTION
(SECTION C-C)

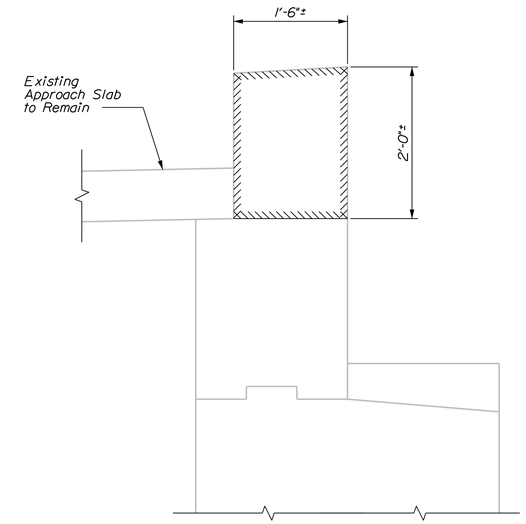

ABUTMENT 2 DEMOLITION SECTION
(SECTION D-D)

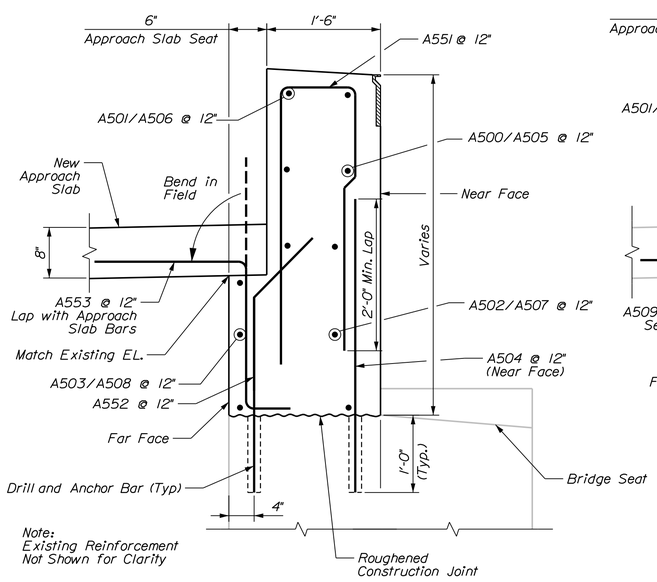

ABUTMENT 1 CONSTRUCTION SECTION
(SECTION A-A)

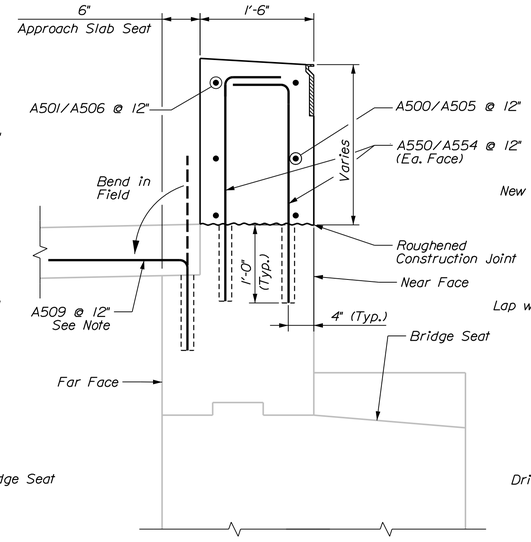

ABUTMENT 1 CONSTRUCTION SECTION
(SECTION B-B)

Note: Bar A509 shall be installed in existing approach slab seat at locations with partial height backwall replacement with new approach slabs. Lap with Approach Slab bars

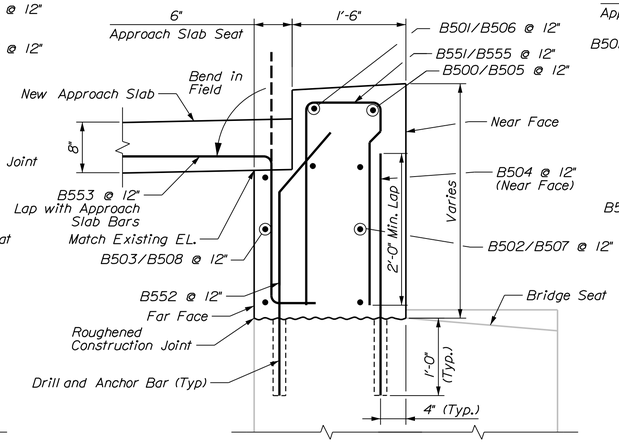

ABUTMENT 2 CONSTRUCTION SECTION
(SECTION C-C)

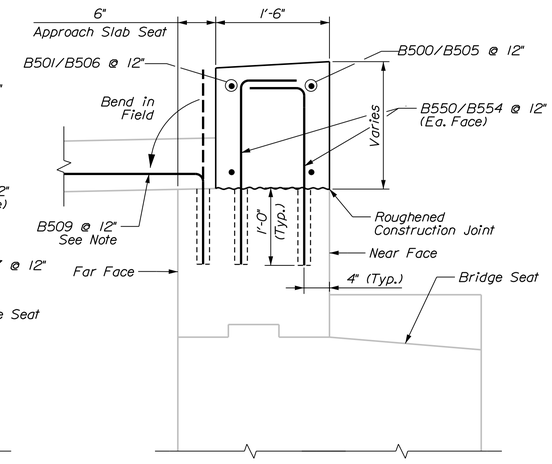

ABUTMENT 2 CONSTRUCTION SECTION
(SECTION D-D)

Note: Bar B509 shall be installed in existing approach slab seat at locations with partial height backwall replacement with new approach slabs. Lap with Approach Slab bars

STATE OF MAINE
DEPARTMENT OF TRANSPORTATION

PROJECT NO.
25631 06

WIN 25631.08

BRIDGE NO. 1449

BRIDGE PLANS

		BY	DATE
PROJ. MANAGER	J. BRASK		
DESIGN-DETAILED	S. LINDSLEY	E. MORRISON	06-24
CHECKED-REVIEWED	D. WHITE	B. COLBURN	06-24
DESIGN2-DETAILED2	N. EDMAN	J. FITZ	06-24
DESIGN3-DETAILED3			
REVISIONS 1			
REVISIONS 2			
REVISIONS 3			
REVISIONS 4			
FIELD CHANGES			

SIGNATURE

P.E. NUMBER

DATE

I-95 SB OVER WEBB RD
BRIDGE NO. 1449
PITTSFIELD SOMERSET COUNTY

ABUTMENT SECTIONS (BR. NO. 1449)

SHEET NUMBER
52
OF 110

Filename: ...\0xx_Webb_Br 1449_Abut_Sections.dgnDivision: Username: jfitzpatrick Date:6/10/2024

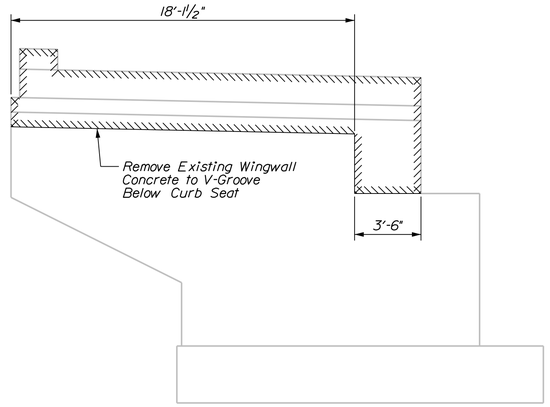

ABUTMENT 1 RIGHT WINGWALL DEMOLITION ELEVATION

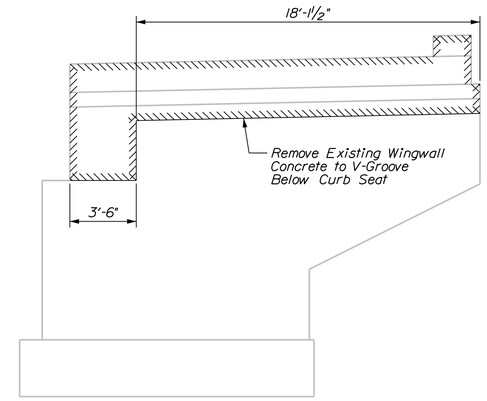

ABUTMENT 1 LEFT WINGWALL DEMOLITION ELEVATION

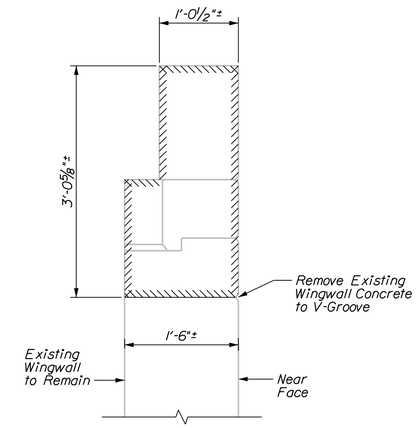

WINGWALL DEMOLITION SECTION

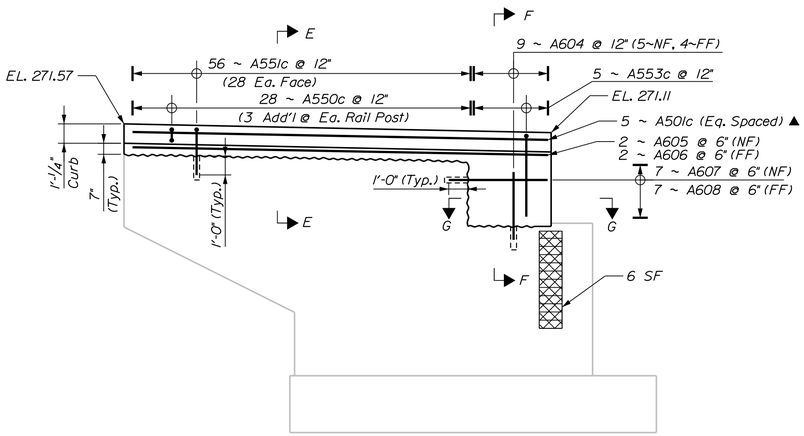

ABUTMENT 1 RIGHT WINGWALL CONSTRUCTION ELEVATION

(See Superstructure Plan for Bridge Rail Layout)
See Sheet 54 for Section F-F

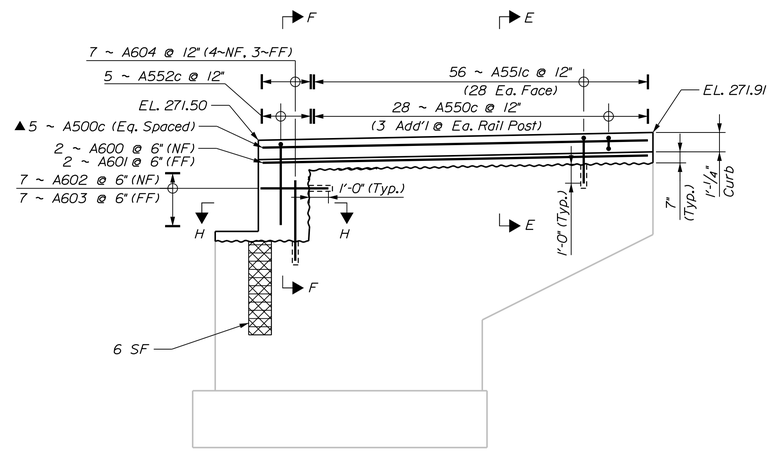

ABUTMENT 1 LEFT WINGWALL CONSTRUCTION ELEVATION

(See Superstructure Plan for Bridge Rail Layout)
See Sheet 54 for Section F-F

LEGEND

Repair of Vertical Surfaces ≥ 8 Inches
See Bump Out Detail Sheet 54

▲ Bars to be Cut in Field

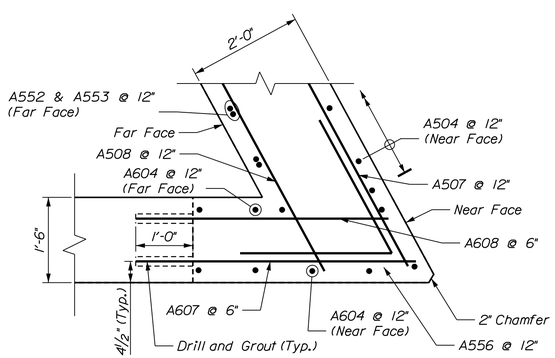

SECTION G-G

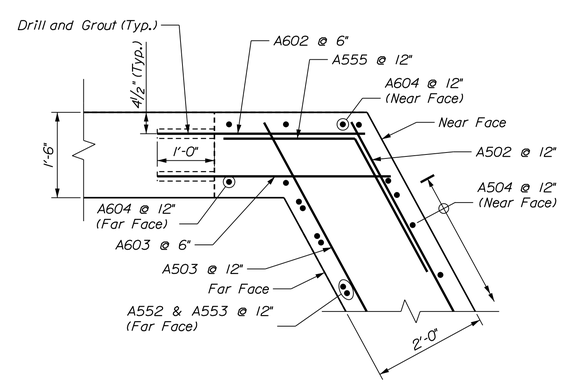

SECTION H-H

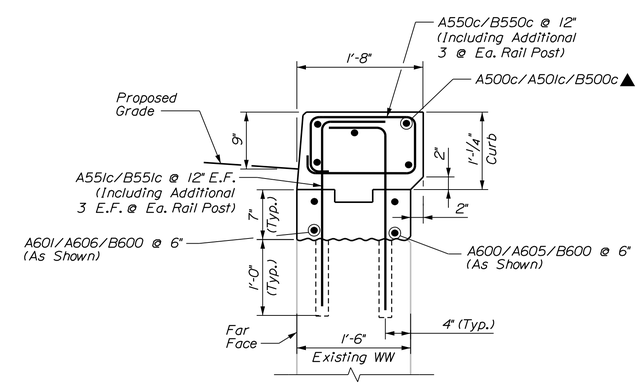

WINGWALL CONSTRUCTION SECTION
(SECTION E-E)

STATE OF MAINE
DEPARTMENT OF TRANSPORTATION

PROJECT NO.
25631.06

WIN 25631.08

BRIDGE NO. 1449

BRIDGE PLANS

PROJ. MANAGER	J. BRASK	BY	DATE
DESIGN-DETAILED	S. LINDSLEY	E. MORRISON	06-24
CHECKED-REVIEWED	D. WHITE	B. COLBURN	06-24
DESIGN2-DETAILED2	N. EDMAN	J. FITZ	06-24
DESIGN3-DETAILED3			
REVISIONS 1			
REVISIONS 2			
REVISIONS 3			
REVISIONS 4			
FIELD CHANGES			

SIGNATURE

P.E. NUMBER

DATE

I-95 SB OVER WEBB RD
BRIDGE NO. 1449

PITTSFIELD SOMERSET COUNTY

WINGWALL MODIFICATIONS
(BR. NO. 1449)

SHEET NUMBER
53
OF 110

Filename: ...\0xx_Webb_Br 1449_Wingwall_Modificati0hssibdgn Username: jfitzpatrick Date:6/10/2024

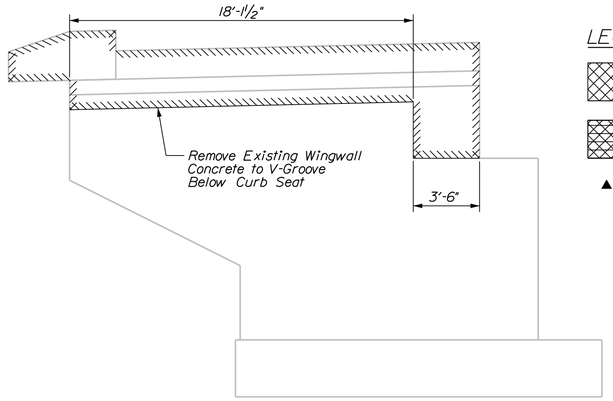

ABUTMENT 2 LEFT WINGWALL DEMOLITION ELEVATION

LEGEND

Repair of Vertical Surfaces < 8 Inches

Repair of Vertical Surfaces ≥ 8 Inches

▲ Bars to be Cut in Field

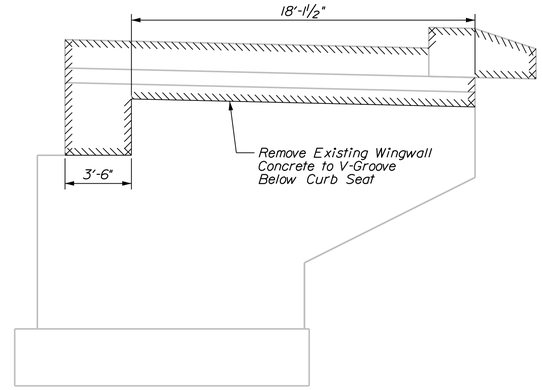

ABUTMENT 2 RIGHT WINGWALL DEMOLITION ELEVATION

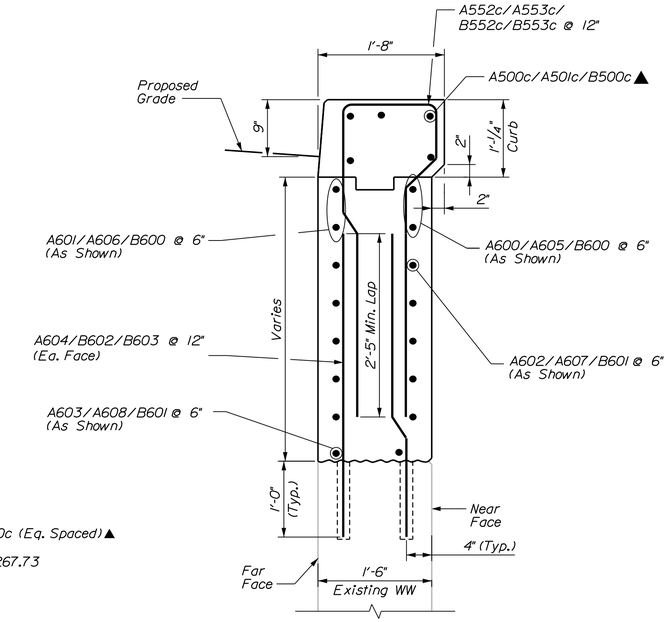

WINGWALL CONSTRUCTION SECTION (SECTION F-F)

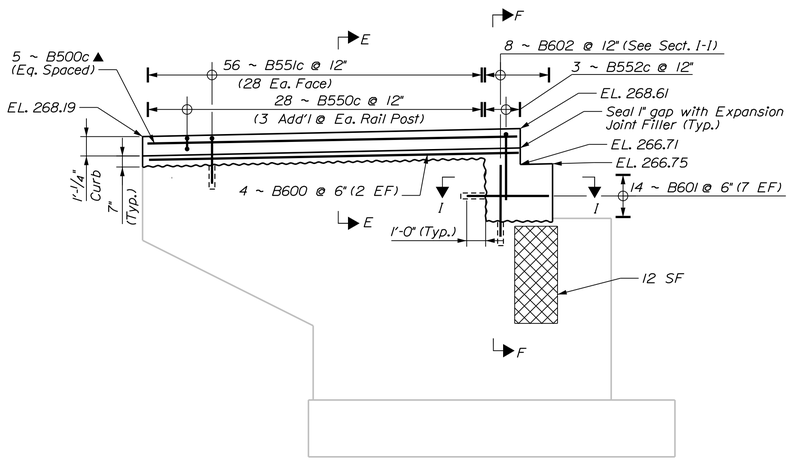

ABUTMENT 2 LEFT WINGWALL CONSTRUCTION ELEVATION

(See Superstructure Plan for Bridge Rail Layout)
See Sheet 53 for Section E-E

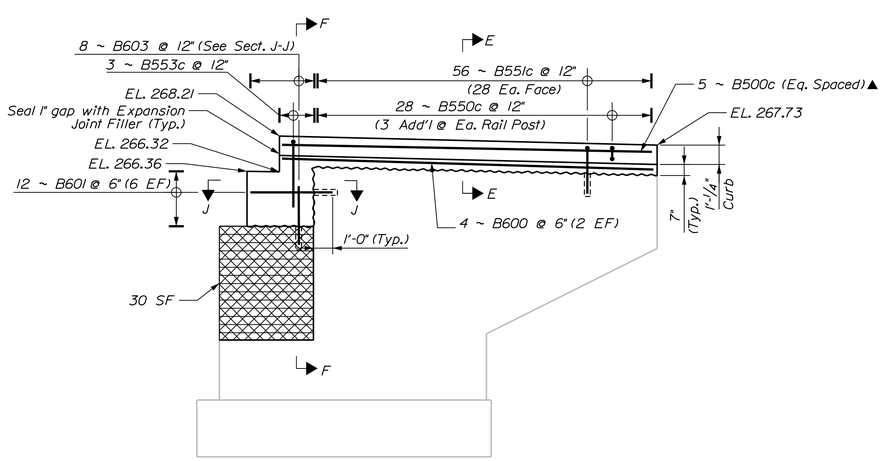

ABUTMENT 2 RIGHT WINGWALL CONSTRUCTION ELEVATION

(See Superstructure Plan for Bridge Rail Layout)
See Sheet 53 for Section E-E
See Bump Out Detail this Sheet to achieve 2" clear cover

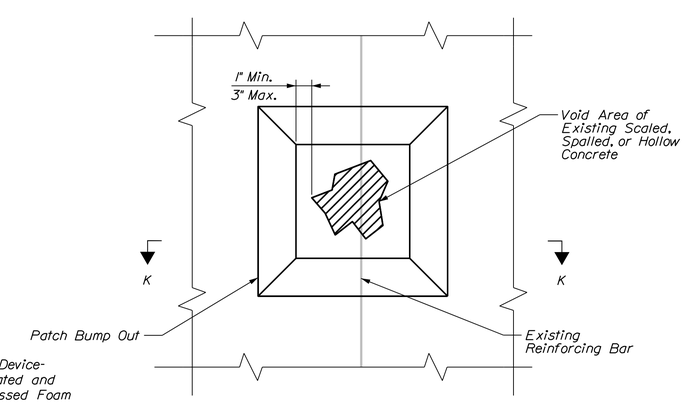

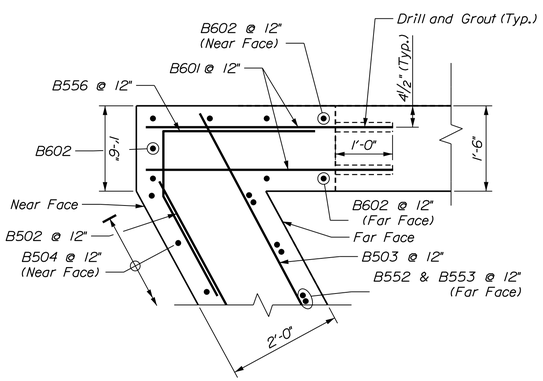

SECTION I-I

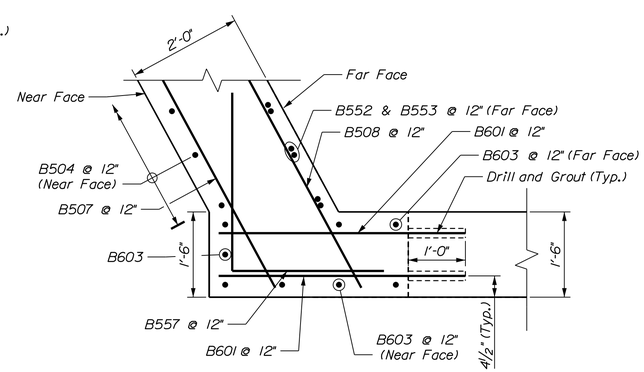

SECTION J-J

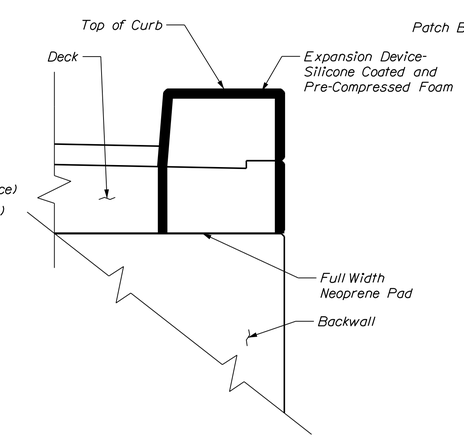

WINGWALL JOINT FILLER DETAIL

Other Side Similar

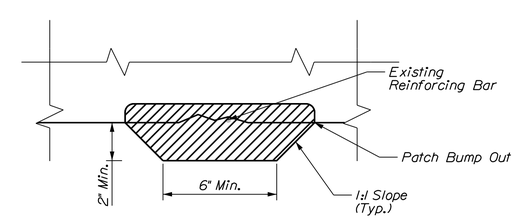

SECTION K-K

BUMP OUT DETAIL

Not to Scale

STATE OF MAINE
DEPARTMENT OF TRANSPORTATION

PROJECT NO. 2563106

WIN 25631.08

BRIDGE NO. 1449

BRIDGE PLANS

PROJ. MANAGER	J. BRASK	BY	DATE
DESIGN-DETAILED	S. LINDSLEY	E. MORRISON	06-24
CHECKED-REVIEWED	D. WHITE	B. COLBURN	06-24
DESIGN2-DETAILED2	N. EDMAN	J. FITZ	06-24
DESIGN3-DETAILED3			
REVISIONS 1			
REVISIONS 2			
REVISIONS 3			
REVISIONS 4			
FIELD CHANGES			

SIGNATURE

P.E. NUMBER

DATE

I-95 SB OVER WEBB RD
BRIDGE NO. 1449

PITTSFIELD SOMERSET COUNTY

WINGWALL MODIFICATIONS
(BR. NO. 1449)

SHEET NUMBER

54

OF 110

Filename: ...\0xx_Webb_Br 1449_Wingwall_Modifications\Bridge\Design

Username: jfitzpatrick Date:6/10/2024

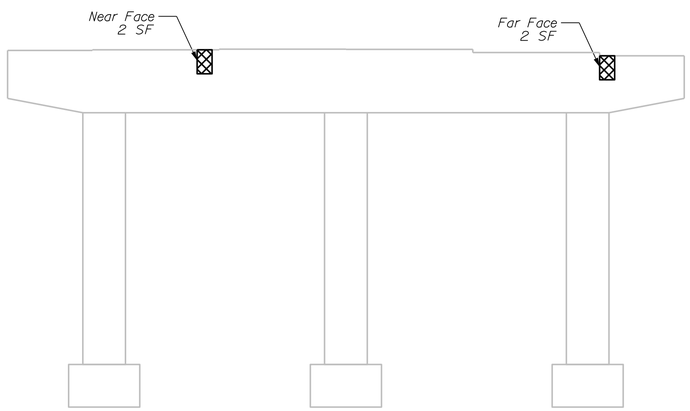

PIER 1

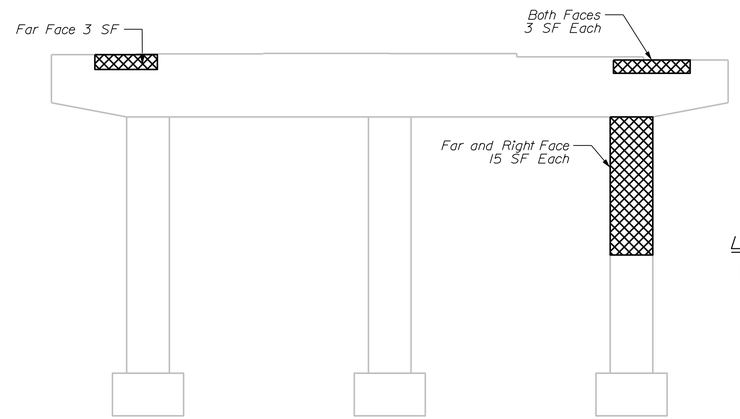

PIER 2

LEGEND

Repair of Vertical Surfaces < 8 Inches

STATE OF MAINE
DEPARTMENT OF TRANSPORTATION

PROJECT NO.
2563106

WIN 25631.08

BRIDGE NO. 1449

BRIDGE PLANS

PROJ. MANAGER	J. BRASK	BY	DATE
DESIGN-DETAILED	S. LINDSLEY	E. MORRISON	06-24
CHECKED-REVIEWED	D. WHITE	B. COLBURN	06-24
DESIGN2-DETAILED2	N. EDMAN	J. FITZ	06-24
DESIGN3-DETAILED3			
REVISIONS 1			
REVISIONS 2			
REVISIONS 3			
REVISIONS 4			
FIELD CHANGES			

SIGNATURE

P.E. NUMBER

DATE

I-95 SB OVER WEBB ROAD
BRIDGE NO. 1449

PITTSFIELD SOMERSET COUNTY

PIER REPAIRS
(BR. NO. 1449)

SHEET NUMBER

55

OF 110

Filename: ...\0xx_Webb_Br 1449_Pier_Repairs.dgn Division: Username: jfitzpatrick Date:6/10/2024

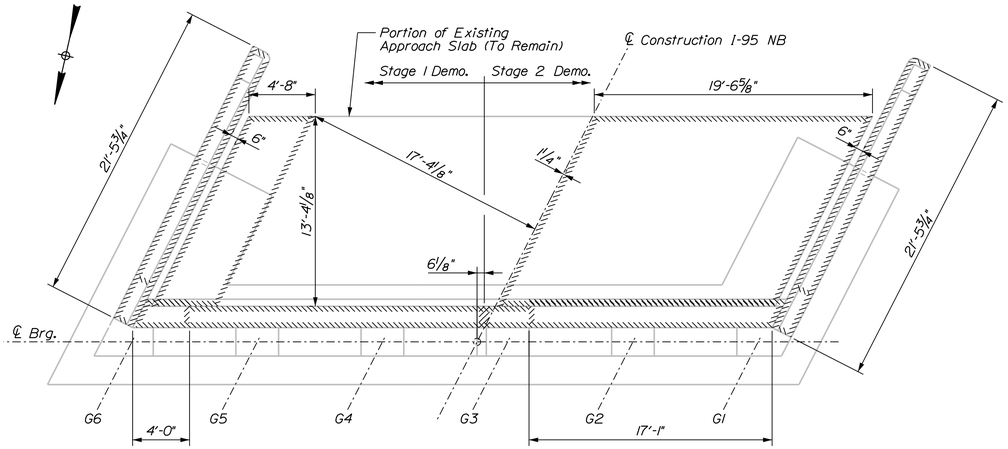

ABUTMENT 1 DEMOLITION PLAN

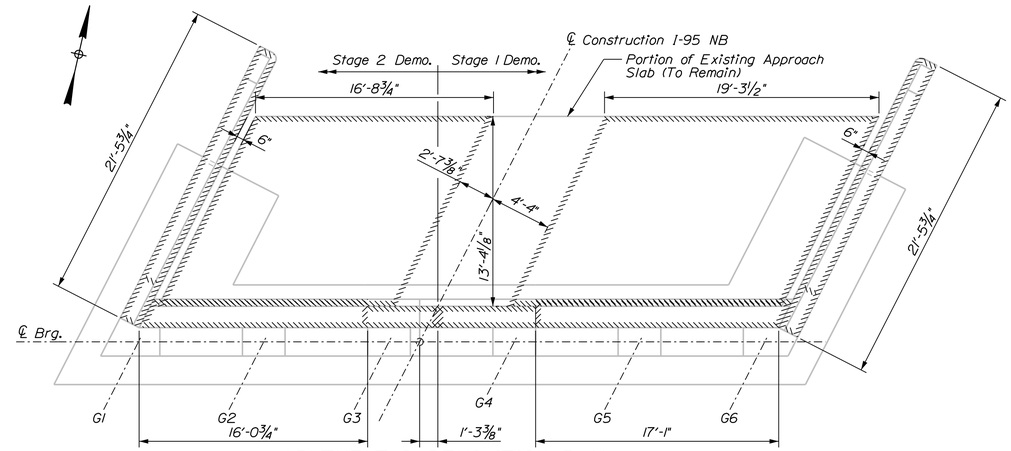

ABUTMENT 2 DEMOLITION PLAN

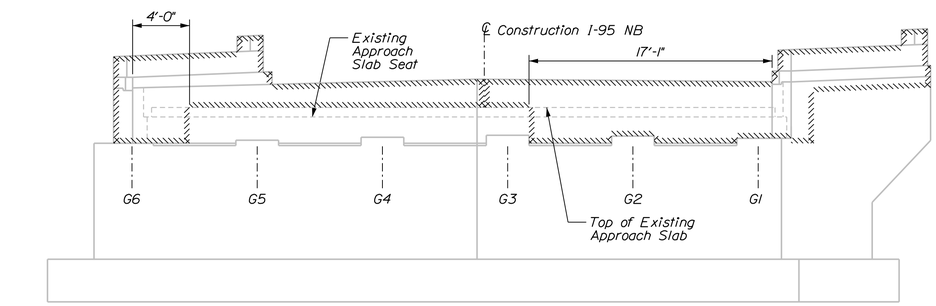

Note: Subfooting not shown for clarity.

ABUTMENT 1 DEMOLITION ELEVATION

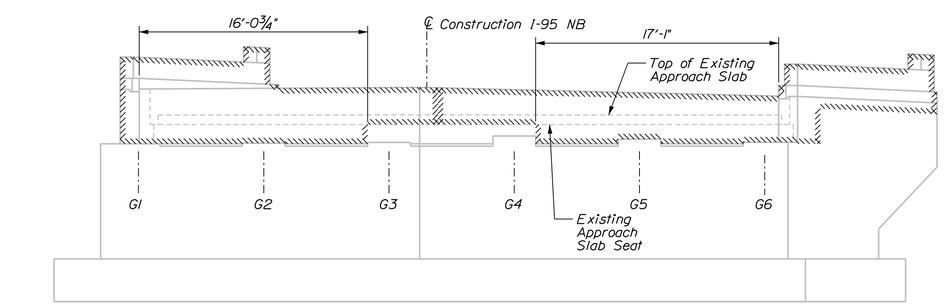

Note: Subfooting not shown for clarity.

ABUTMENT 2 DEMOLITION ELEVATION

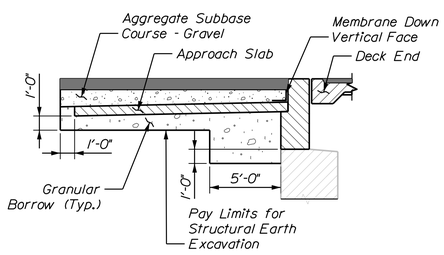

ABUTMENT 1
FULL HEIGHT BACKWALL REPLACMENT
BACKFILL DETAIL

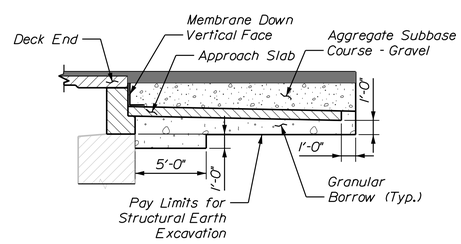

ABUTMENT 2
FULL HEIGHT BACKWALL REPLACMENT
BACKFILL DETAIL

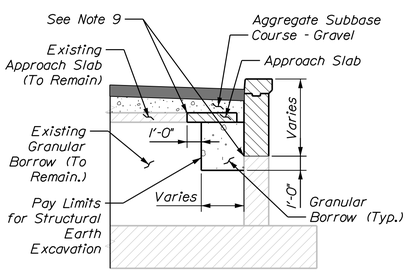

WINGWALL EARTHWORK DETAIL

Abutment 1 Shown, Abutment 2 Similar

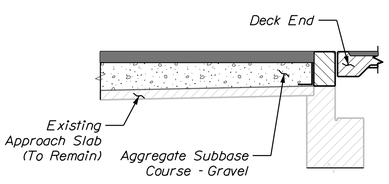

ABUTMENT 1
PARTIAL HEIGHT BACKWALL REPLACMENT
BACKFILL DETAIL

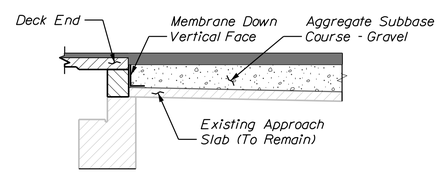

ABUTMENT 2
PARTIAL HEIGHT BACKWALL REPLACMENT
BACKFILL DETAIL

ABUTMENT AND WINGWALL MODIFICATION NOTES

1. The Contractor shall use care not to damage any existing reinforcing steel which is to remain. Any damaged reinforcing steel shall be replaced as directed by the Resident at no expense to the Department.
2. Before drilling and grouting new reinforcing steel, the Contractor shall locate reinforcing steel in existing concrete by non-destructive methods to avoid conflicts. All costs associated with this work shall be incidental to related Contract Items.
3. Reinforcing steel shall have 2 inches cover unless otherwise noted.
4. Existing abutment and wingwall concrete to be removed as shown on the plans shall be sawcut 1 inch deep prior to removal of existing concrete. All costs associated with this work shall be incidental to related Contract items.
5. Where drilling and anchoring of reinforcement is required, the Contractor shall use a material listed on the Maine Department of Transportation Qualified Products List of Concrete Adhesive Anchor Systems. The depth of embedment shall be sufficient to develop 125% of the yield strength of the bar per the manufacturer's recommendations or 12 inches, whichever is greater. Proposed anchoring material and embedment depth shall be submitted for approval. Payment for drilling and anchoring will be incidental to related Contract items.
6. Dimensions and layout shown are based on available as-built drawings. Contractor shall field verify all dimensions prior to any related work.
7. All surfaces to be rehabilitated shall be clean of all debris and foreign material and shall be roughened to the ½" amplitude prior to placement of the new concrete. Payment shall be incidental to related concrete items.
8. Projecting reinforcing that can be maintained, in addition to that shown in the details, may be left in place at Contractor's discretion.
9. Cover abutment backwall, wingwall, and approach slab joints where waterstops are not required in accordance with Standard Details Section 502.

STATE OF MAINE
DEPARTMENT OF TRANSPORTATION
PROJECT NO.
25631.06
WIN 25631.09
BRIDGE NO. 5984
BRIDGE PLANS

PROJ. MANAGER	J. BRASK	BY	DATE
DESIGN-DETAILED	S. LINDSLEY	E. MORRISON	06-24
CHECKED-REVIEWED	D. WHITE	B. COLBURN	06-24
DESIGN2-DETAILED2	N. EDMAN	J. FITZ	06-24
DESIGN3-DETAILED3			
REVISIONS 1			
REVISIONS 2			
REVISIONS 3			
REVISIONS 4			
FIELD CHANGES			

SIGNATURE

P.E. NUMBER

DATE

I-95 NB OVER WEBB RD
BRIDGE NO. 5984
PITTSFIELD SOMERSET COUNTY

ABUTMENT DEMOLITION
(BR. NO. 5984)

SHEET NUMBER
56
OF 110

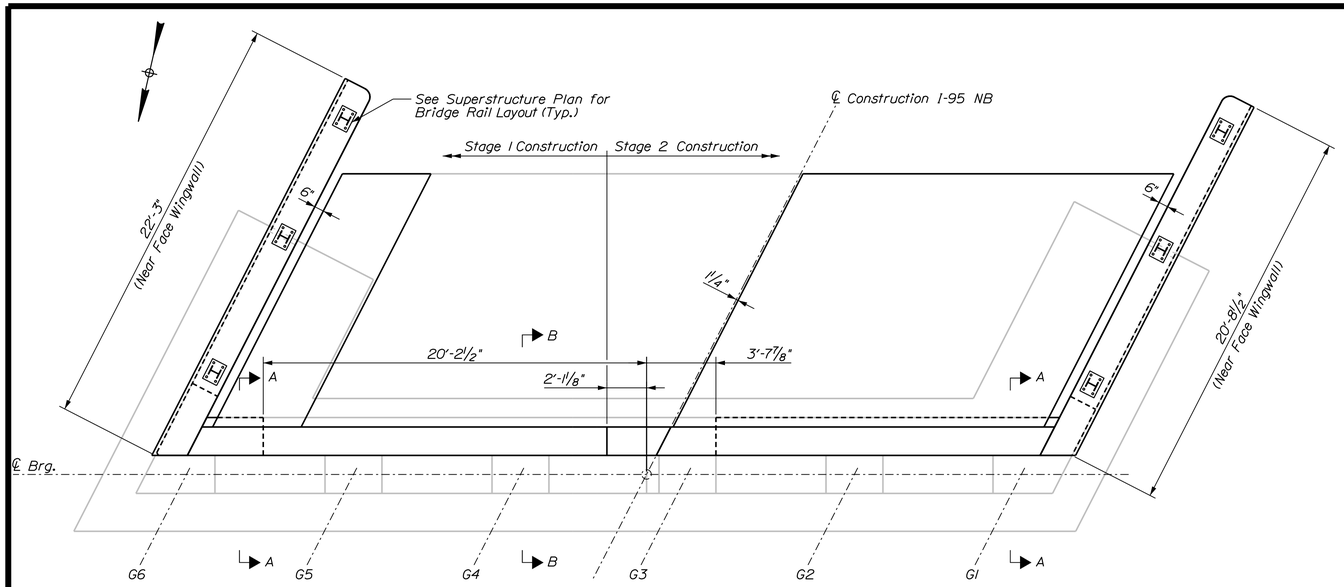

ABUTMENT 1 CONSTRUCTION PLAN

For Abutment Demo and Construction Sections, See Sheet 59

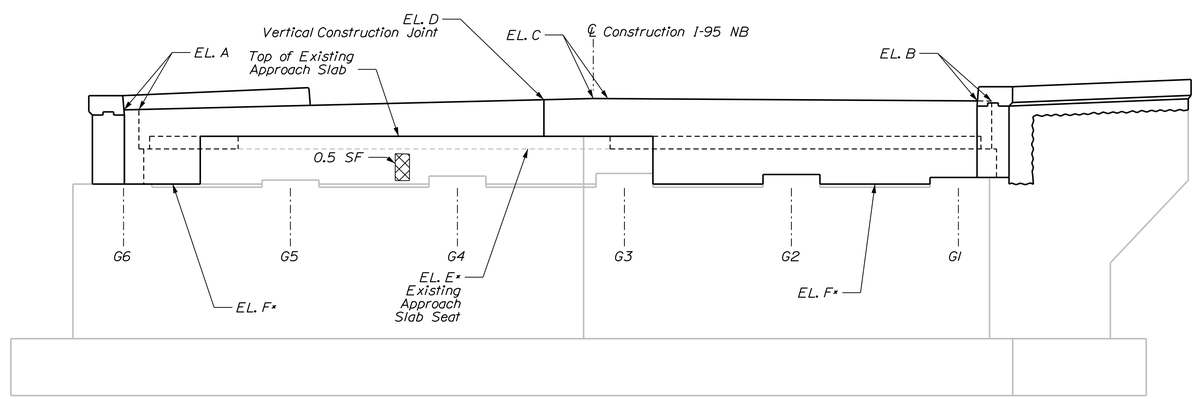

ABUTMENT 1 CONSTRUCTION ELEVATION

Concrete Repair Areas

Bridge #5984 Abutment 1 Elevations									
EL. A		EL. B		EL. C		EL. D		EL. E*	EL. F*
NF	FF	NF	FF	NF	FF	NF	FF		
252.86	252.89	253.32	253.35	253.46	253.49	253.39	253.41	250.79	248.94

NF = Near Face FF= Far Face

* Elevations provided are approximated from the existing bridge plans. To be field verified.

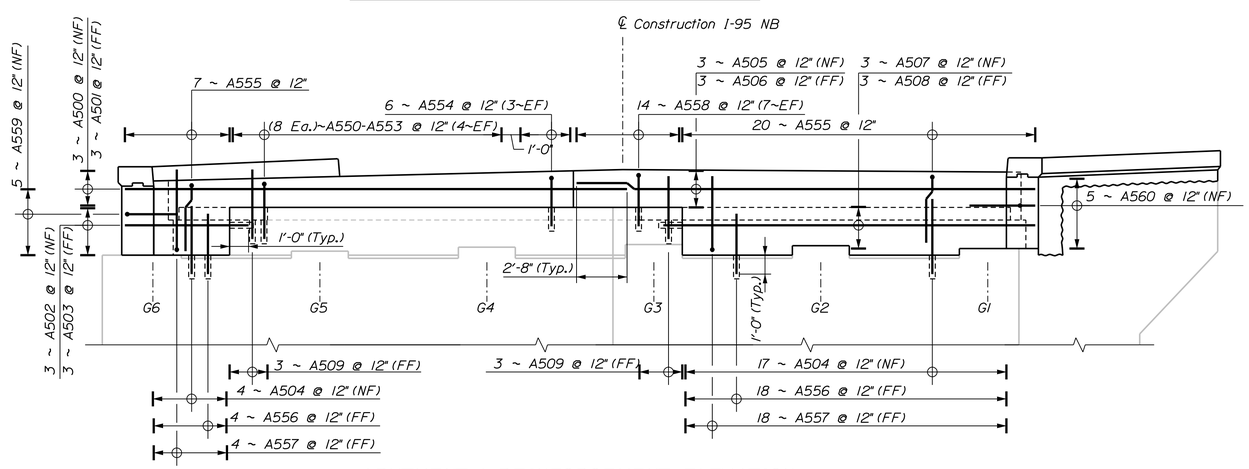

ABUTMENT 1 REINFORCEMENT ELEVATION

CONCRETE REPAIR NOTES

1. The quantity of concrete repairs and reinforcing layout on these drawings are based on visual inspection. The Contractor shall match those repair limits as closely as possible except with the approval of the Resident.
2. No repairs are anticipated for substructure units not shown. The Contractor and the Resident shall verify that no work is required.
3. The Department must approve changes in quantity beyond what is shown or assumed.
4. All broken or corroded reinforcing bars shall be supplemented in accordance with Standard Specification Section 518.04. Supplemental reinforcing shall maintain a clear cover of 2" minimum. Supplemental bars shall be paid for under Pay Items 503.19 and 503.20.

STATE OF MAINE
DEPARTMENT OF TRANSPORTATION

PROJECT NO.
25631.06

WIN 25631.09

BRIDGE NO. 5984

BRIDGE PLANS

PROJ. MANAGER	J. BRASCH	BY	DATE
DESIGN-DETAILED	S. LINDSLEY	E. MORRISON	06-24
CHECKED-REVIEWED	D. WHITE	B. COLBURN	06-24
DESIGN2-DETAILED2	N. EDMAN	J. FITZ	06-24
DESIGN3-DETAILED3			
REVISIONS 1			
REVISIONS 2			
REVISIONS 3			
REVISIONS 4			
FIELD CHANGES			

SIGNATURE

P.E. NUMBER

DATE

I-95 NB OVER WEBB RD
BRIDGE NO. 5984

PITTSFIELD SOMERSET COUNTY

ABUTMENT 1 CONSTRUCTION
(BR. NO. 5984)

SHEET NUMBER

57

OF 110

Filename: ...\0xx_Webb_Br 5984_Abut 1_Construction.dgn Division: Username: jfitzpatrick Date:6/10/2024

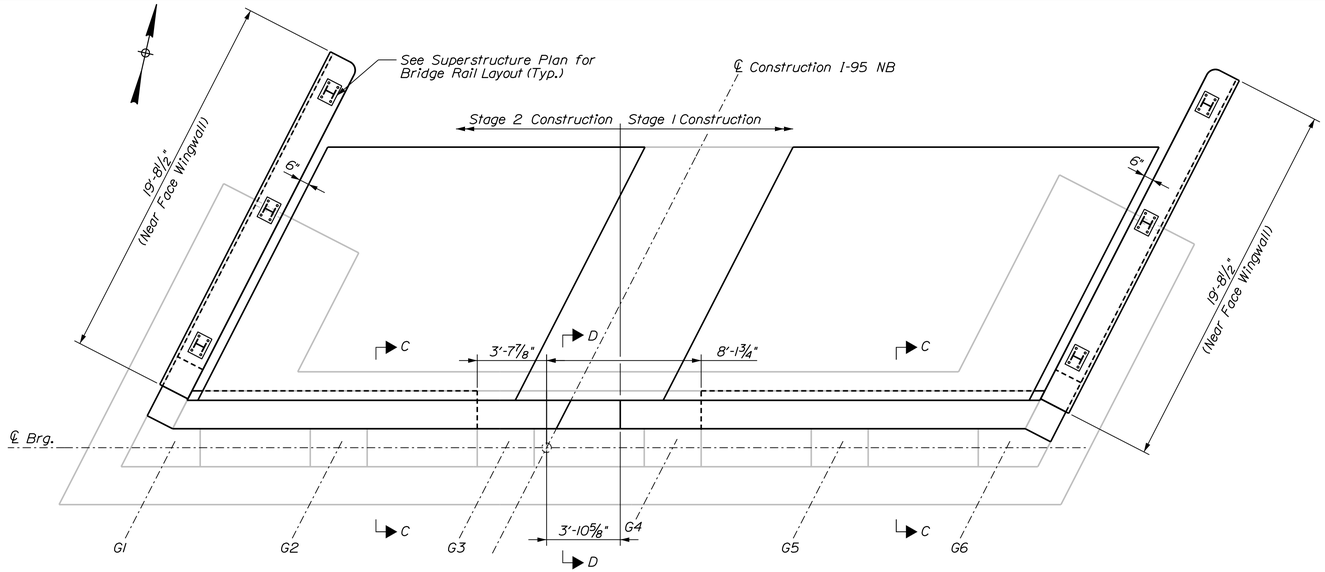

ABUTMENT 2 CONSTRUCTION PLAN

For Abutment Demo and Construction Sections, See Sheet 59

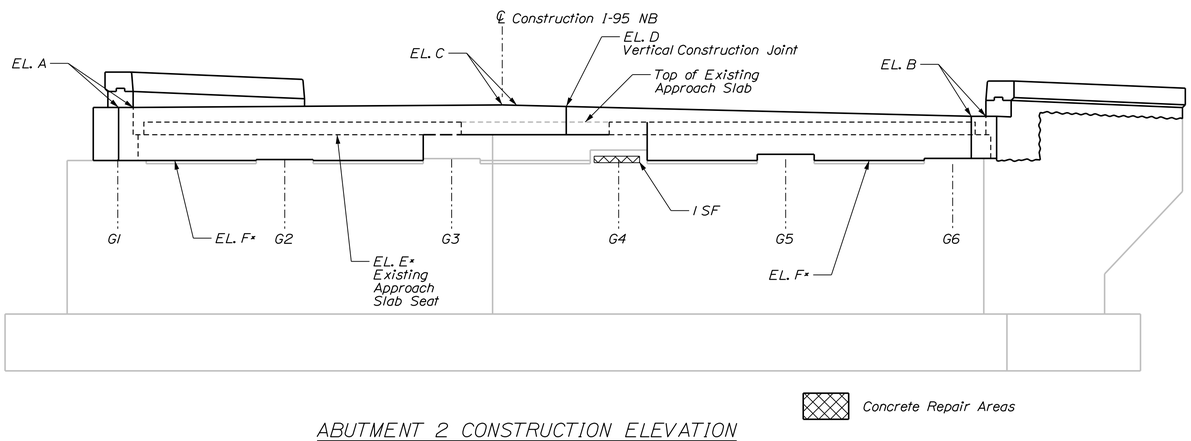

ABUTMENT 2 CONSTRUCTION ELEVATION

Bridge #5984 Abutment 2 Elevations									
EL. A		EL. B		EL. C		EL. D		EL. E*	EL. F*
NF	FF	NF	FF	NF	FF	NF	FF		
249.58	249.54	249.11	249.08	249.71	249.68	249.63	249.62	248.14	246.78

NF = Near Face FF= Far Face

* Elevations provided are approximated from the existing bridge plans. To be field verified.

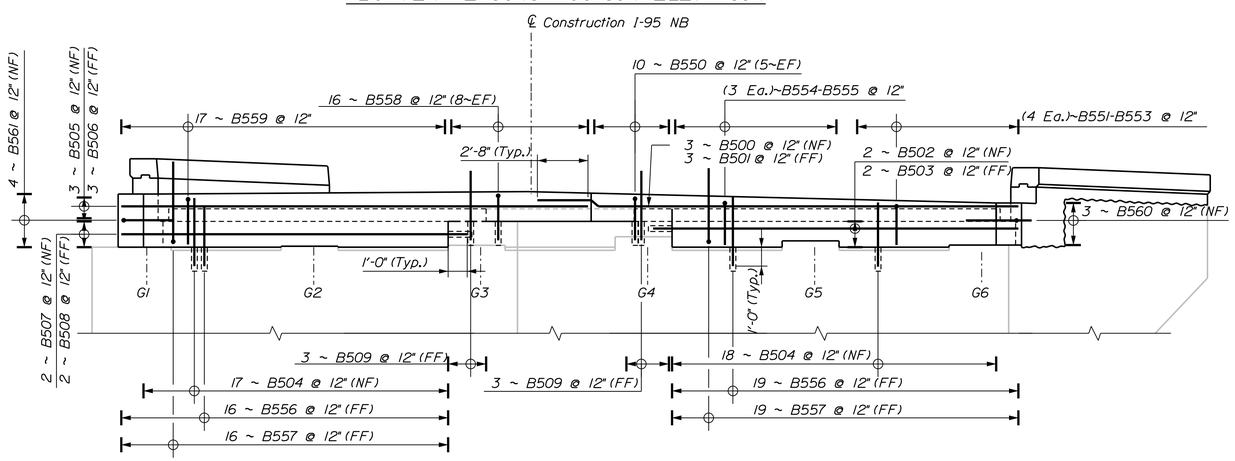

ABUTMENT 2 REINFORCEMENT ELEVATION

STATE OF MAINE
DEPARTMENT OF TRANSPORTATION

PROJECT NO. 2563106

WIN 25631.09

BRIDGE NO. 5984

BRIDGE PLANS

PROJ. MANAGER	J. BRASCH	BY	DATE
DESIGN-DETAILED	S. LINDSLEY	E. MORRISON	06-24
CHECKED-REVIEWED	D. WHITE	B. COLBURN	06-24
DESIGN2-DETAILED2	N. EDMAN	J. FITZ	06-24
DESIGN3-DETAILED3			
REVISIONS 1			
REVISIONS 2			
REVISIONS 3			
REVISIONS 4			
FIELD CHANGES			

SIGNATURE

P.E. NUMBER

DATE

I-95 NB OVER WEBB RD
BRIDGE NO. 5984

PITTSFIELD SOMERSET COUNTY

ABUTMENT 2 CONSTRUCTION
(BR. NO. 5984)

SHEET NUMBER

58

OF 110

Filename: ...\0xx_Webb_Br 5984_Abut 2_Construction.dgn Division: Username: jfitzpatrick Date:6/10/2024

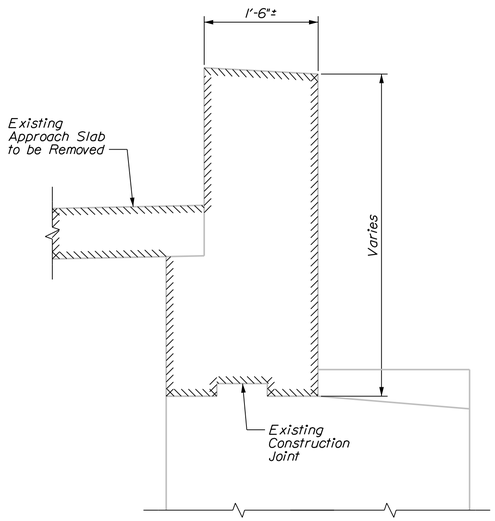

ABUTMENT 1 DEMOLITION SECTION
(SECTION A-A)

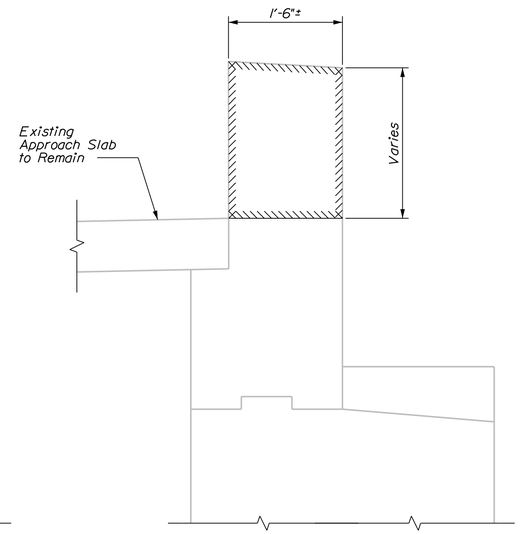

ABUTMENT 1 DEMOLITION SECTION
(SECTION B-B)

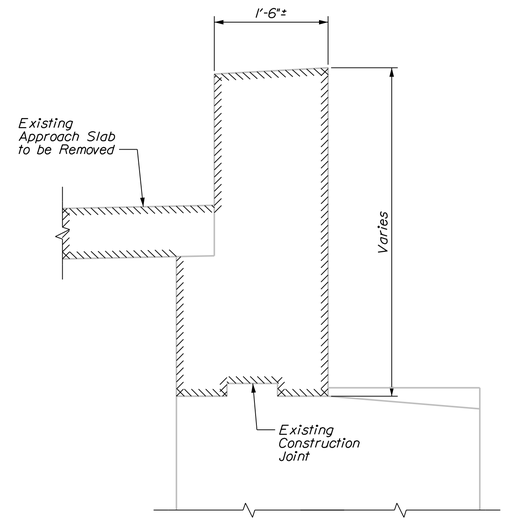

ABUTMENT 2 DEMOLITION SECTION
(SECTION C-C)

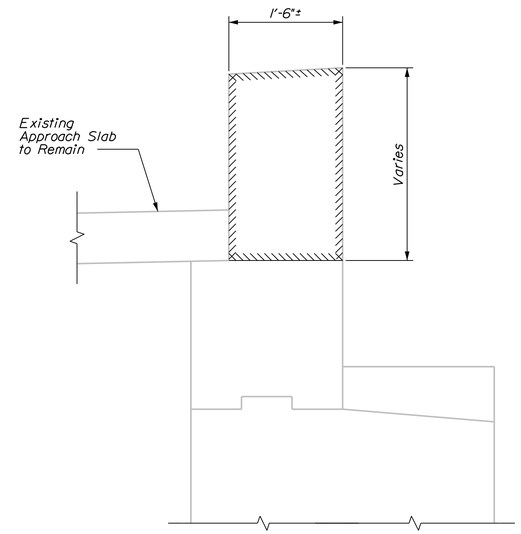

ABUTMENT 2 DEMOLITION SECTION
(SECTION D-D)

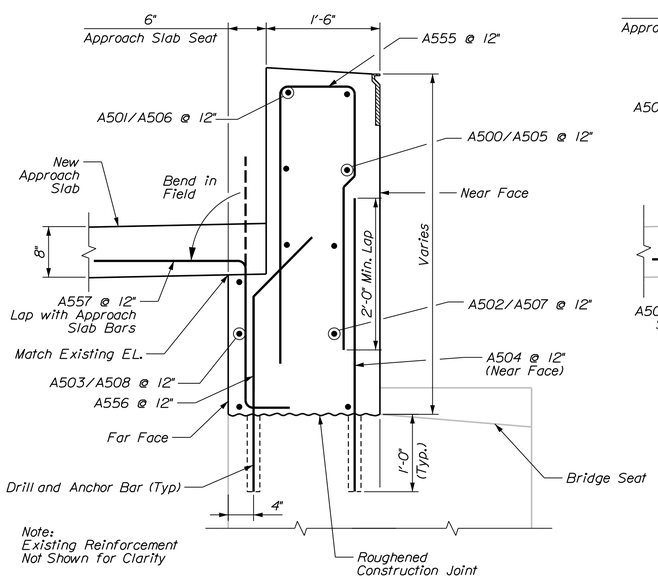

Note:
Existing Reinforcement Not Shown for Clarity

ABUTMENT 1 CONSTRUCTION SECTION
(SECTION A-A)

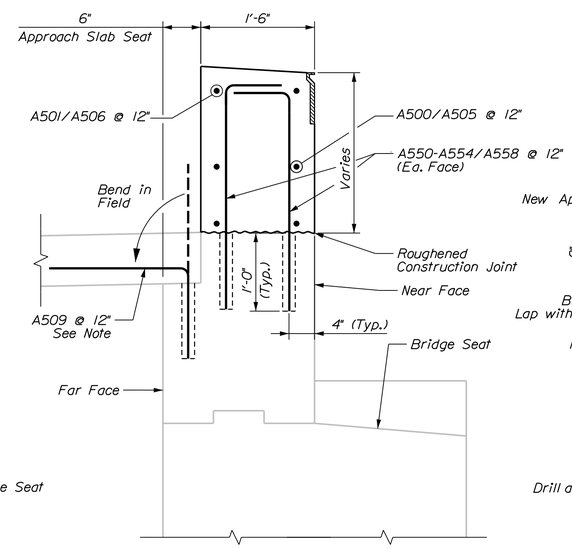

ABUTMENT 1 CONSTRUCTION SECTION
(SECTION B-B)

Note: Bar A509 shall be installed in existing approach slab seat at locations with partial height backwall replacement with new approach slabs. Lap with Approach Slab bars

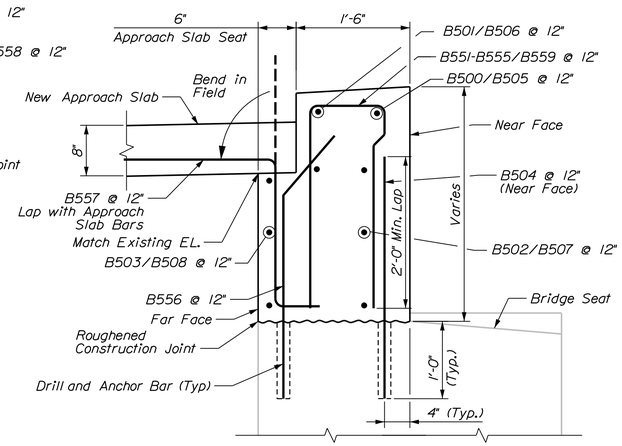

ABUTMENT 2 CONSTRUCTION SECTION
(SECTION C-C)

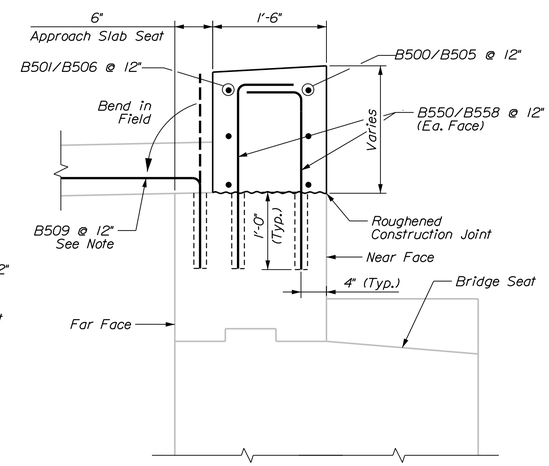

ABUTMENT 2 CONSTRUCTION SECTION
(SECTION D-D)

Note: Bar B509 shall be installed in existing approach slab seat at locations with partial height backwall replacement with new approach slabs. Lap with Approach Slab bars

STATE OF MAINE
DEPARTMENT OF TRANSPORTATION

PROJECT NO.
2563106

WIN 25631.09

BRIDGE NO. 5984

BRIDGE PLANS

PROJ. MANAGER	J. BRASK	BY	DATE
DESIGN-DETAILED	S. LINDSLEY	E. MORRISON	06-24
CHECKED-REVIEWED	D. WHITE	B. COLBURN	06-24
DESIGN2-DETAILED2	N. EDMAN	J. FITZ	06-24
DESIGN3-DETAILED3			
REVISIONS 1			
REVISIONS 2			
REVISIONS 3			
REVISIONS 4			
FIELD CHANGES			

SIGNATURE

P.E. NUMBER

DATE

I-95 NB OVER WEBB RD
BRIDGE NO. 5984

PITTSFIELD SOMERSET COUNTY

ABUTMENT SECTIONS
(BR. NO. 5984)

SHEET NUMBER
59
OF 110

Filename: ...\Oxx_Webb_Br 5984_Abut_Sections.dgn Division: Username: jfitzpatrick Date:6/10/2024

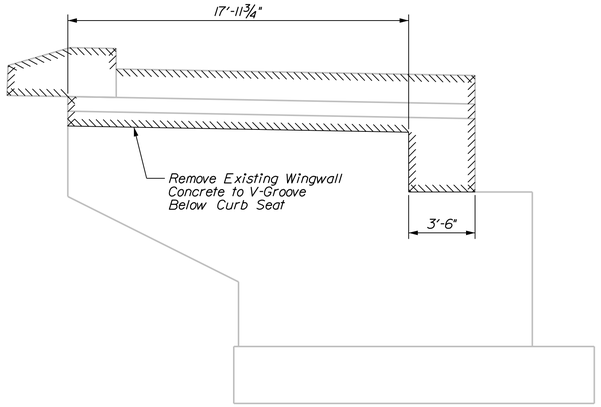

ABUTMENT 1 RIGHT WINGWALL DEMOLITION ELEVATION

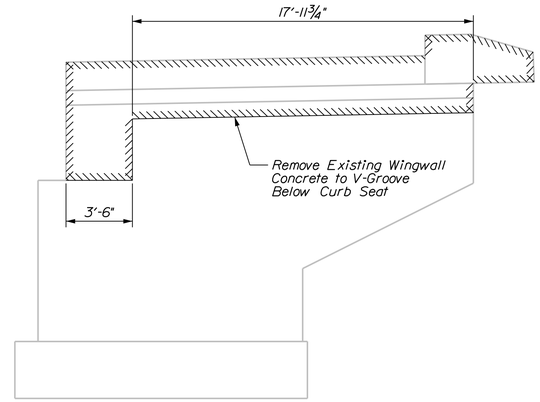

ABUTMENT 1 LEFT WINGWALL DEMOLITION ELEVATION

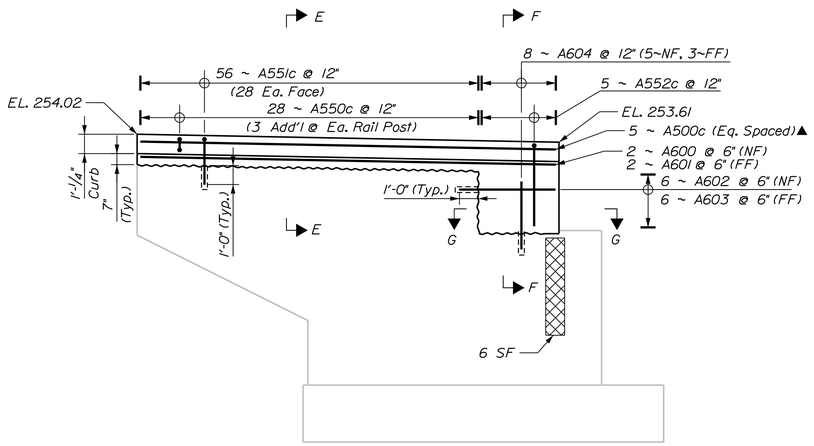

ABUTMENT 1 RIGHT WINGWALL CONSTRUCTION ELEVATION

(See Superstructure Plan for Bridge Rail Layout)
See Sheet 61 for Section F-F

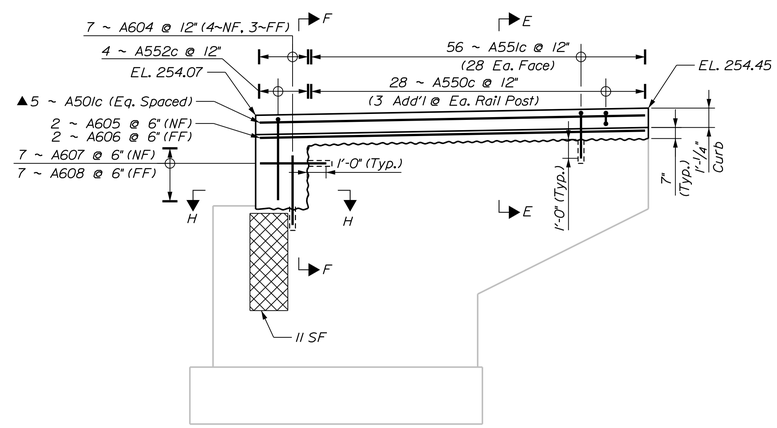

ABUTMENT 1 LEFT WINGWALL CONSTRUCTION ELEVATION

(See Superstructure Plan for Bridge Rail Layout)
See Sheet 61 for Section F-F

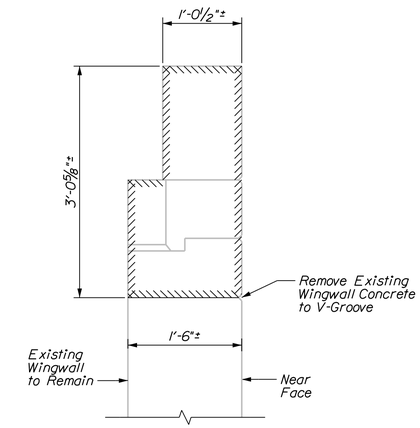

WINGWALL DEMOLITION SECTION

LEGEND

Repair of Vertical Surfaces < 8 Inches

▲ Bars to be Cut in Field

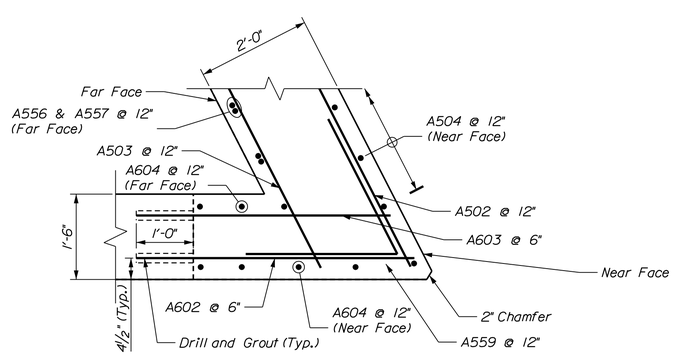

SECTION G-G

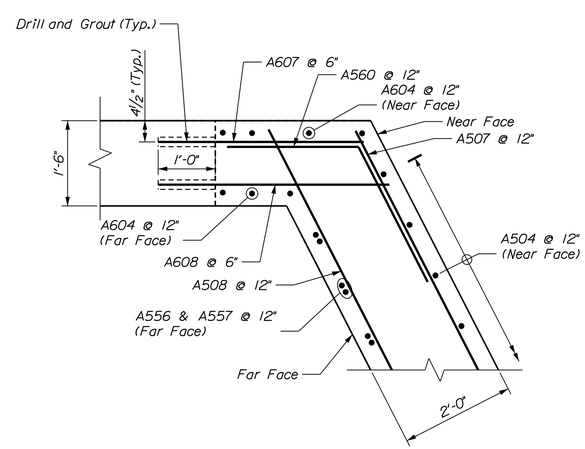

SECTION H-H

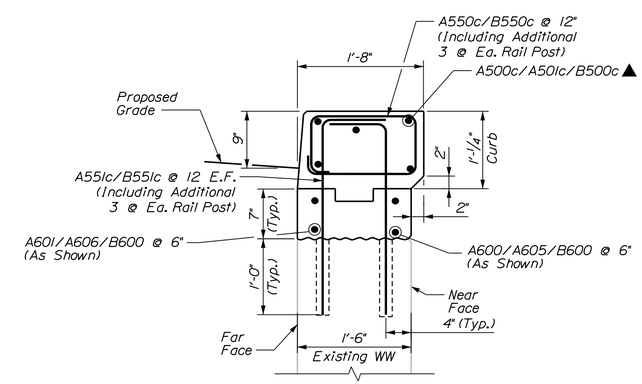

WINGWALL CONSTRUCTION SECTION
(SECTION E-E)

STATE OF MAINE
DEPARTMENT OF TRANSPORTATION

PROJECT NO.
25631.06

WIN 25631.09

BRIDGE NO. 5984

BRIDGE PLANS

		BY	DATE
PROJ. MANAGER	J. BRASK		
DESIGN-DETAILED	S. LINDSLEY	E. MORRISON	06-24
CHECKED-REVIEWED	D. WHITE	B. COLBURN	06-24
DESIGN2-DETAILED2	N. EDMAN	J. FITZ	06-24
DESIGN3-DETAILED3			
REVISIONS 1			
REVISIONS 2			
REVISIONS 3			
REVISIONS 4			
FIELD CHANGES			

SIGNATURE

P.E. NUMBER

DATE

I-95 NB OVER WEBB RD
BRIDGE NO. 5984

PITTSFIELD SOMERSET COUNTY

WINGWALL MODIFICATIONS
(BR. NO. 5984)

SHEET NUMBER

60

OF 110

Filename: ...\0xx_Webb_Br 5984_Wingwall_Modifications.dgn Division Date:6/10/2024 Username: jfitzpatrick

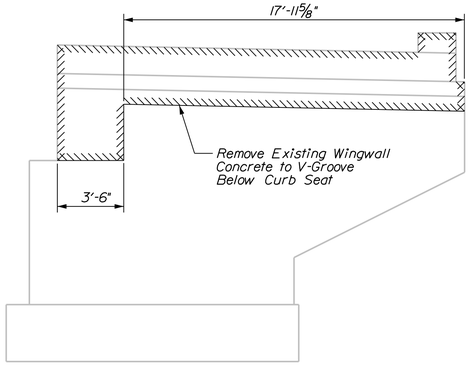

ABUTMENT 2 RIGHT WINGWALL DEMOLITION ELEVATION

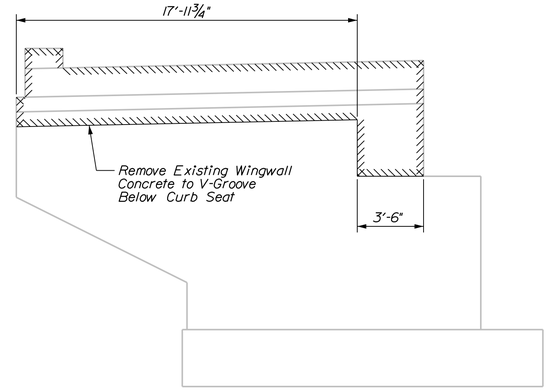

ABUTMENT 2 LEFT WINGWALL DEMOLITION ELEVATION

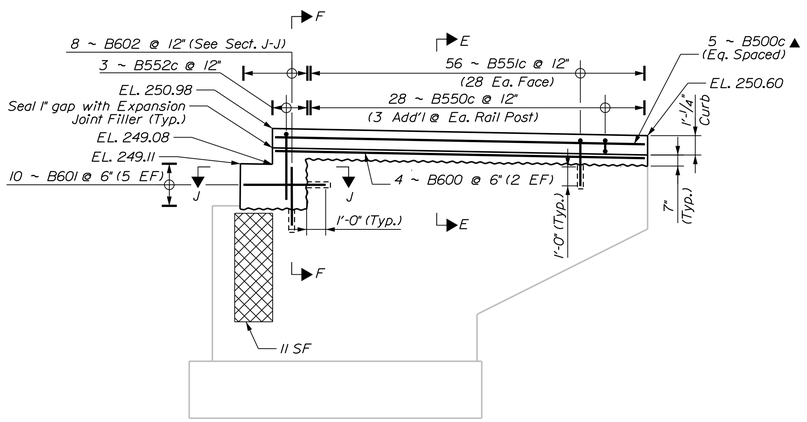

ABUTMENT 2 RIGHT WINGWALL CONSTRUCTION ELEVATION

(See Superstructure Plan for Bridge Rail Layout)
See Sheet 60 for Section E-E

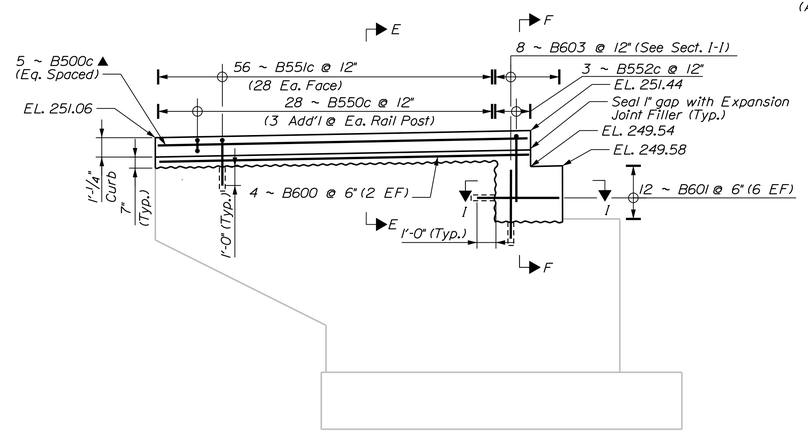

ABUTMENT 2 LEFT WINGWALL CONSTRUCTION ELEVATION

(See Superstructure Plan for Bridge Rail Layout)
See Sheet 60 for Section E-E

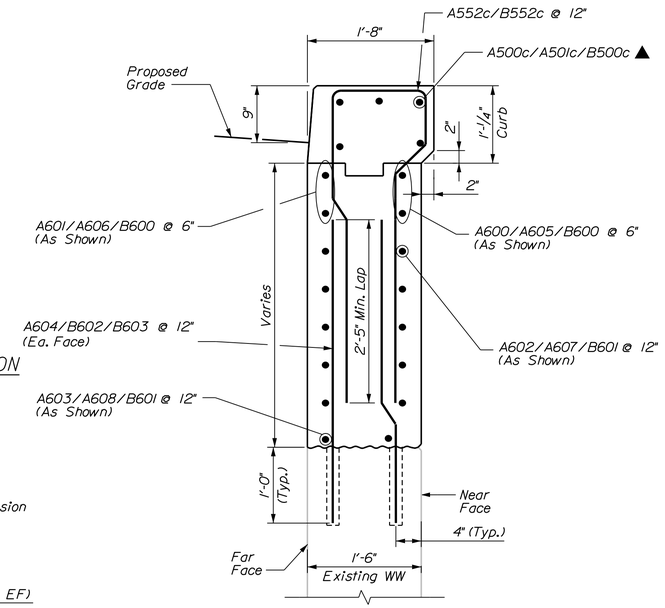

WINGWALL CONSTRUCTION SECTION
(SECTION F-F)

LEGEND

Repair of Vertical Surfaces < 8 Inches

▲ Bars to be Cut in Field

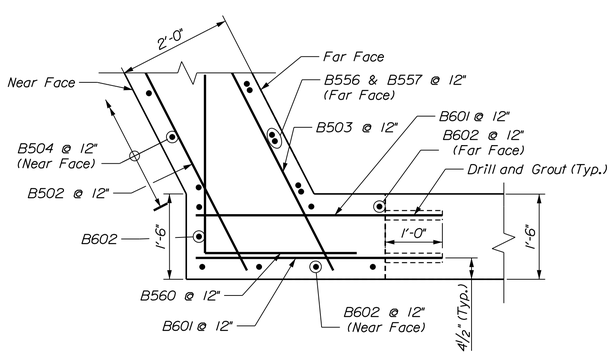

SECTION J-J

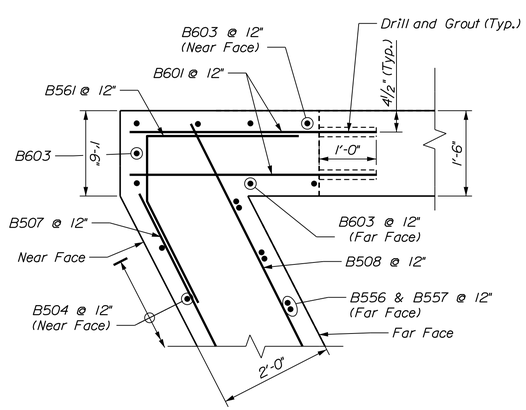

SECTION I-I

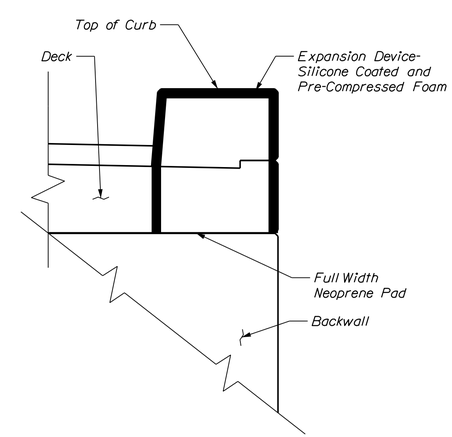

WINGWALL JOINT FILLER DETAIL

Other Side Similar

STATE OF MAINE
DEPARTMENT OF TRANSPORTATION

PROJECT NO.
25631.06

WIN 25631.09

BRIDGE NO. 5984

BRIDGE PLANS

PROJ. MANAGER	J. BRASK		
DESIGN-DETAILED	S. LINDSLEY	E. MORRISON	06/24
CHECKED-REVIEWED	D. WHITE	B. COLBURN	06/24
DESIGN2-DETAILED2	N. EDMAN	J. FITZ	06/24
DESIGN3-DETAILED3			
REVISIONS 1			
REVISIONS 2			
REVISIONS 3			
REVISIONS 4			
FIELD CHANGES			

SIGNATURE

P.E. NUMBER

DATE

I-95 NB OVER WEBB RD
BRIDGE NO. 5984
PITTSFIELD SOMERSET COUNTY

WINGWALL MODIFICATIONS
(BR. NO. 5984)

SHEET NUMBER
61
OF 110

Filename: ...\0xx_Webb_Br 5984_Wingwall_Modifications.dgn Date:6/10/2024 Username: jfitzpatrick

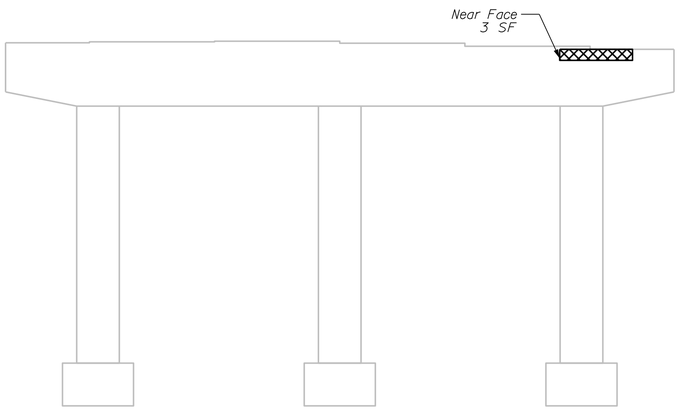

PIER 1

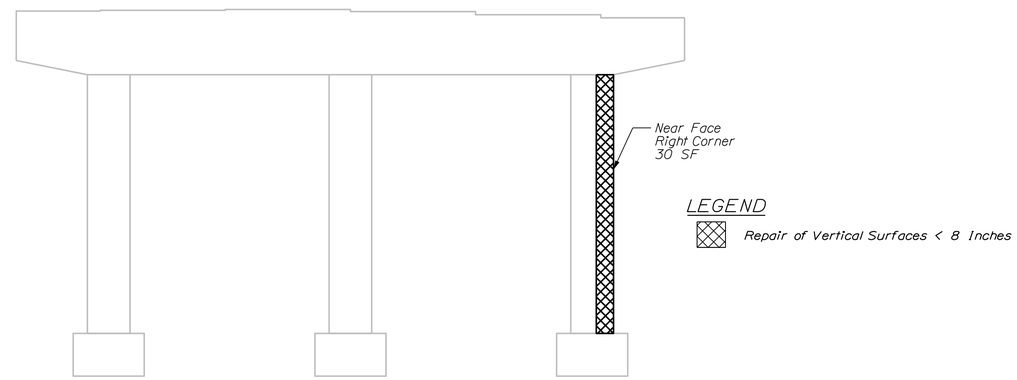

PIER 2

STATE OF MAINE
DEPARTMENT OF TRANSPORTATION

PROJECT NO.
2563106

WIN 25631.09

BRIDGE NO. 5984

BRIDGE PLANS

PROJ. MANAGER	J. BRASK	BY	DATE
DESIGN-DETAILED	S. LINDSLEY	E. MORRISON	06-24
CHECKED-REVIEWED	D. WHITE	B. COLBURN	06-24
DESIGN2-DETAILED2	N. EDMAN	J. FITZ	06-24
DESIGN3-DETAILED3			
REVISIONS 1			
REVISIONS 2			
REVISIONS 3			
REVISIONS 4			
FIELD CHANGES			

SIGNATURE

P.E. NUMBER

DATE

I-95 NB OVER WEBB ROAD
BRIDGE NO. 5984

PITTSFIELD SOMERSET COUNTY

PIER REPAIRS
(BR. NO. 5984)

SHEET NUMBER

62

OF 110

Filename: ...\0xx_Webb_Br 5984_Pier_Repairs.dgn Division: Username: jfitzpatrick Date:6/10/2024

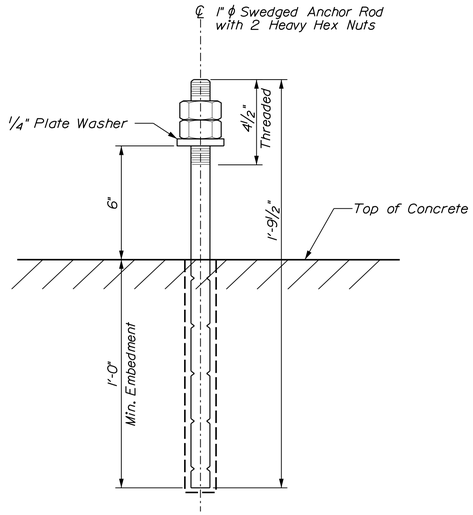

ANCHOR ROD DETAIL

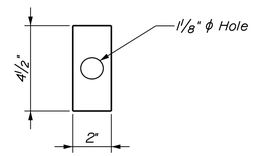

WASHER PLATE DETAIL

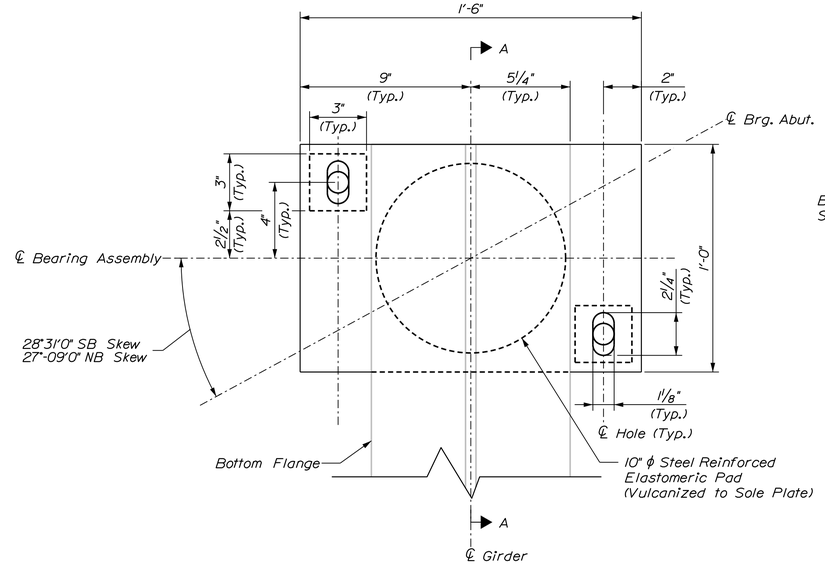

Plan

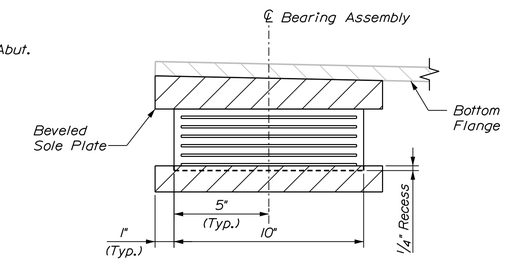

Section A-A

6 - 3/8" Elastomer Layers
1 - 1/4" Elastomer Bottom Layer
6 - 1/8" Steel Shims

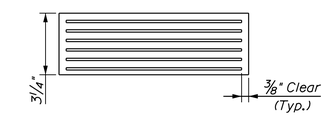

Elastomeric Pad Section

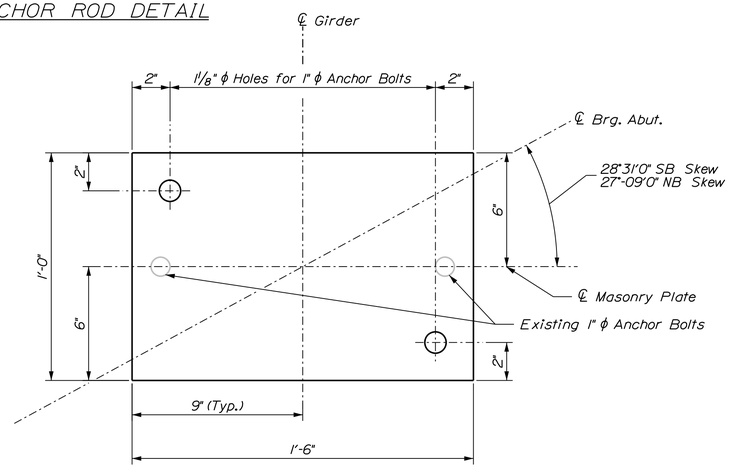

MASONRY PLATE

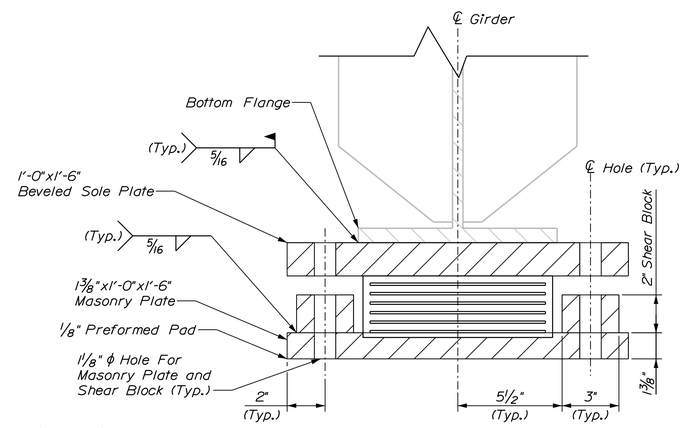

Elevation

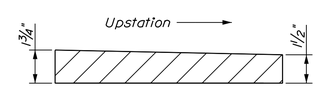

Sole Plate Section

Bearing Design Loads	
Criteria	
Unfactored Dead Load	20 Kips
Unfactored Live Load	75 Kips
Max. Displacement	1.03 inch
Dead Load Rotation	0.0016 rad.
Max. Live Load Rotation	0.0012 rad.
Rotational Tolerance	0.0100 rad.

ELASTOMERIC BEARING NOTES

1. Existing bearings shall be removed and replaced at the locations shown on the Key Plan. The existing anchor rods shall be cut flush with the bridge seat. Payment for removal and installation of new anchor rods is incidental to the Bearing Installation Pay Item.
2. The shear modulus of the elastomer shall be 130 psi and meet AASHTO M251 criteria for Design Method B.
3. Vulcanization of the elastomer to the steel plates shall be done during the primary mold process. Sole plates shall be vulcanized to the elastomer.
4. Sole and masonry plates shall meet the requirement of ASTM A709, Grade 50. Anchor rods shall meet the requirement of ASTM F1554, Grade 105 and shall be swedged or threaded on the embedded portion of the rod.
5. Masonry plates shall be galvanized in accordance with Section 506. Sole plates for steel superstructures shall be treated in the same manner as the existing structural steel. Anchor rods, washers, nuts, and shear blocks shall be galvanized to ASTM A153 pr ASTM B695, Class 50, Type 1.
6. All bearings shall be marked prior to shipping. The marks shall include the bearing location on the bridge and a direction arrow that points upstation. All marks shall be permanent and shall be visible after the bearing is installed.
7. Bearings shall be covered during shipping and at any time prior to installation that the bearings may be exposed to sunlight.
8. The Contractor shall measure the steel temperature using a calibrated surface thermometer at 5 locations, as determined by the Resident, if the ambient air temperature is less than 30°F or over 90°F within the 24 hours prior to each day of bearing installation. The average of the measured steel temperatures shall be above 0°F and less than 90°F in order for bearing installation to proceed.
9. All necessary precautions shall be taken to protect bearing components from field weld flash and spatter. Heat from welding operations shall be controlled such that steel adjacent to the elastomer does not exceed 200°F. The temperature shall be verified by the use of temperature indicating crayons or other suitable means.
10. Upset the threads on the anchor rods after assembly of the bearing.
11. The Contractor shall not weld the girders to the sole plate until after all adjustments have been made in accordance with Standard Specification Section 523.094.
12. The "Bearing Design Load" for each bearing as noted in Standard Specification, Subsection 523.23.4 is given in the table. This is the total load for the Service I load combination without impact.
13. For drilling and anchoring the anchor rods, the Contractor shall use material listed on the Maine Department of Transportation Qualified Products List of Concrete Adhesive Anchoring Systems.

ABUTMENT 1 - EXPANSION BEARING ASSEMBLY

NOTES

1. This work includes removal of 26 steel plate expansion bearings and replacing with 24 elastomeric expansion bearing assemblies and two steel plate expansion bearing assemblies at locations shown on the Key Plan.
2. All existing dimensions and information shown on the plans for the steel plate expansions bearings are based on as-built drawings. The Contractor shall field verify all relevant dimensions prior to submission of shop drawings.
3. At the location of the new bearing assemblies, the concrete pedestal shall be dressed one inch larger all around than the size of the masonry plate to match the existing bottom of masonry plate elevation (prior to demolition) exactly.

STATE OF MAINE
DEPARTMENT OF TRANSPORTATION
PROJECT NO. 25631.06
WIN 25631.08 & 25631.09
BRIDGE NO. 1449 & 5984
BRIDGE PLANS

		BY	DATE
PROJ. MANAGER	J. BRASK		
DESIGN-DETAILED	S. LINDSLEY	E. MORRISON	06-24
CHECKED-REVIEWED	D. WHITE	B. COLBURN	06-24
DESIGN2-DETAILED2	N. EDMAN	J. FITZ	06-24
DESIGN3-DETAILED3			
REVISIONS: 1			
REVISIONS: 2			
REVISIONS: 3			
REVISIONS: 4			
FIELD CHANGES			

SIGNATURE
P.E. NUMBER
DATE

I-95 SB & NB OVER WEBB RD
BRIDGE NO. 1449 & 5984
PITTSFIELD SOMERSET COUNTY

ABUTMENT 1
BEARING DETAILS

SHEET NUMBER
63
OF 110

Filename: ...\0xx_Webb_Bearing_Details_1.dgn Division: Username: jfitzpatrick Date:6/10/2024

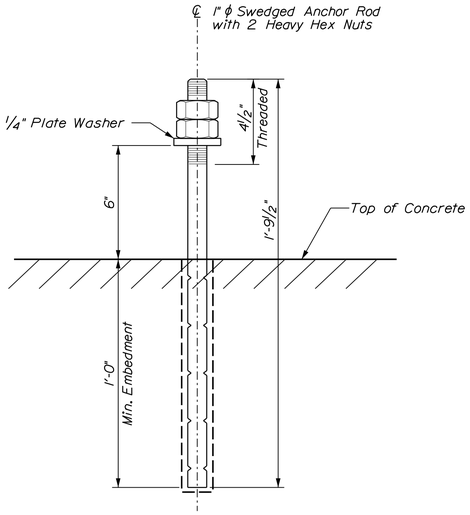

ANCHOR ROD DETAIL

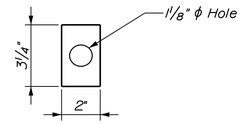

WASHER PLATE DETAIL

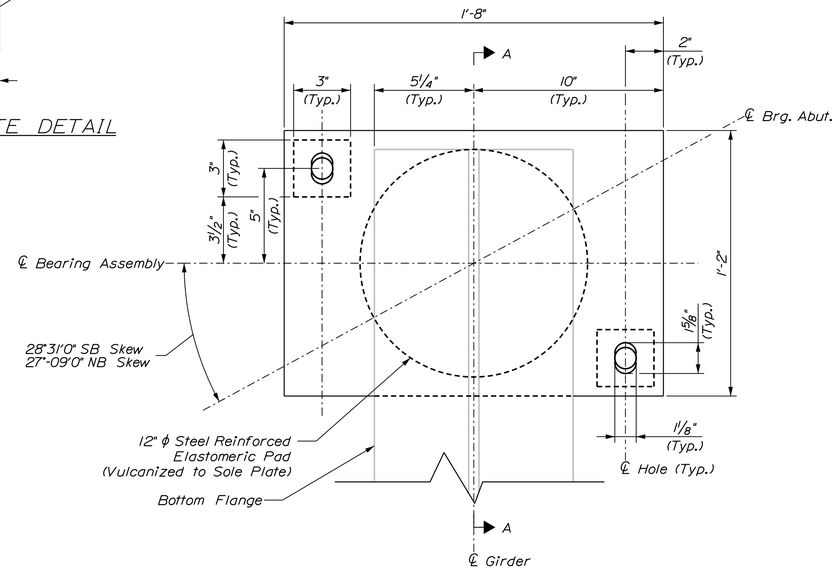

Plan

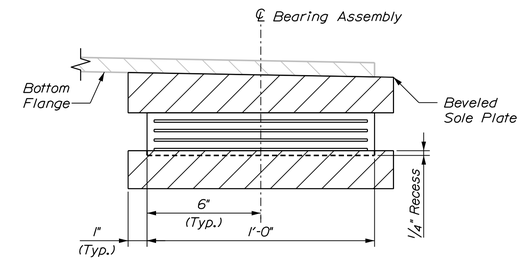

Section A-A

4 - 3/8" Elastomer Layers
1 - 1/4" Elastomer Bottom Layer
4 - 1/8" Steel Shims

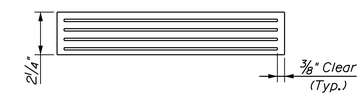

Elastomeric Pad Section

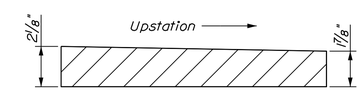

Sole Plate Section

Bearing Design Loads	
Criteria	
Unfactored Dead Load	20 Kips
Unfactored Live Load	75 Kips
Max. Displacement	0.46 inch
Dead Load Rotation	0.0016 rad.
Max. Live Load Rotation	0.0012 rad.
Rotational Tolerance	0.0100 rad.

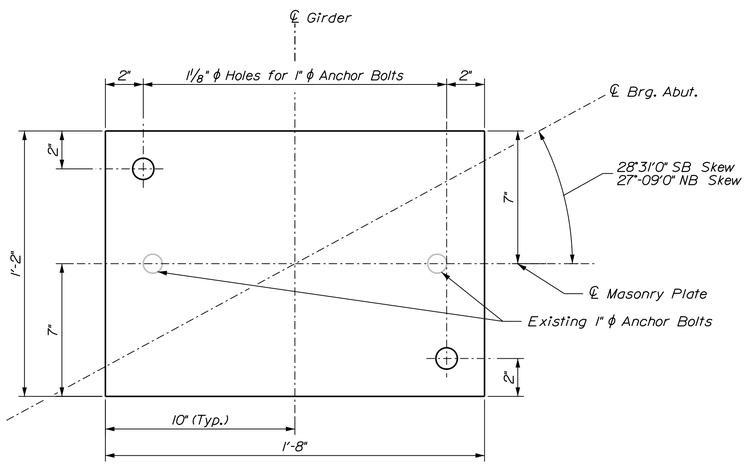

MASONRY PLATE

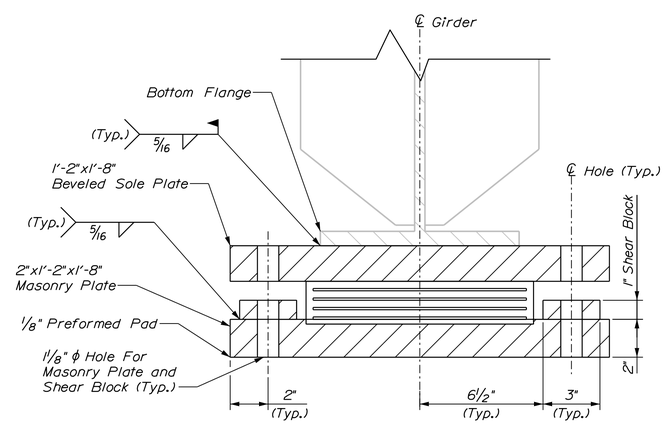

Elevation

ABUTMENT 2 - EXPANSION BEARING ASSEMBLY

TEMPORARY SUPPORT AND JACKING SYSTEM NOTES

1. The temporary support and jacking system shall be designed by the Contractor. The Contractor shall submit a complete set of design calculations and drawings for the temporary support, jacking system, and bearing replacement procedure. The calculations and drawings shall be stamped by a professional engineer licensed in Maine. See Special Provision for additional requirements.

2. Rigid vertical support of superstructure in the jacked position shall be provided by locking the jack rams or by furnishing and installing an independent support system. Except for during jacking operations, the superstructure shall not be hydraulically support.

3. See Special Provision for calculated unfactored jacking and temporary structural support loads.

STATE OF MAINE
DEPARTMENT OF TRANSPORTATION
PROJECT NO.
2563106
WIN 25631.08 & 25631.09
BRIDGE NO. 1449 & 5984
BRIDGE PLANS

PROJ. MANAGER	J. BRASK	BY	DATE
DESIGN-DETAILED	S. LINDSLEY	E. MORRISON	06-24
CHECKED-REVIEWED	D. WHITE	B. COLBURN	06-24
DESIGN2-DETAILED2	N. EDMAN	J. FITZ	06-24
DESIGN3-DETAILED3			
REVISIONS 1			
REVISIONS 2			
REVISIONS 3			
REVISIONS 4			
FIELD CHANGES			

SIGNATURE
P.E. NUMBER
DATE

I-95 SB & NB OVER WEBB RD
BRIDGE NO. 1449 & 5984
PITTSFIELD SOMERSET COUNTY

ABUTMENT 2
BEARING DETAILS

SHEET NUMBER
64
OF 110

Filename: ...\0xx_Webb_Bearing_Details_2.dgn Division: Username: jfitzpatrick Date:6/10/2024

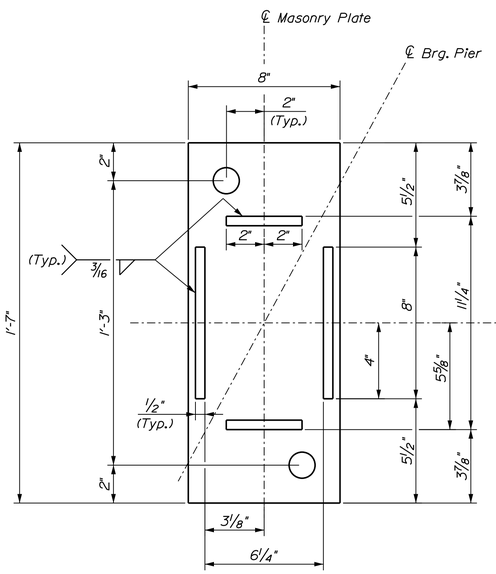

MASONRY PLATE

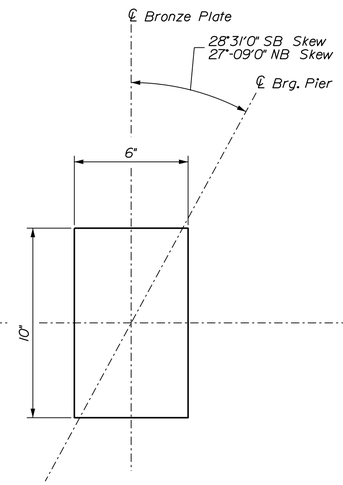

SELF-LUBRICATING BRONZE PLATE

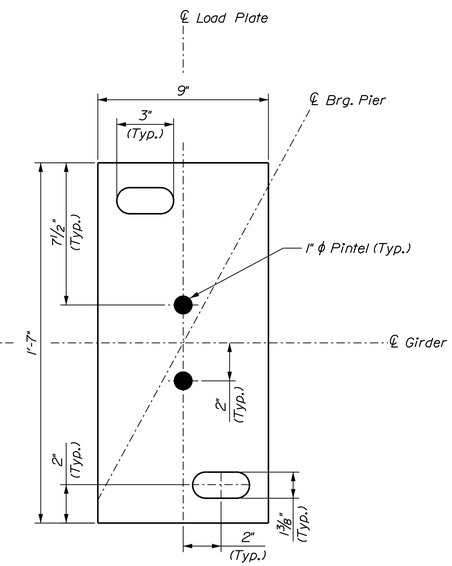

LOAD PLATE

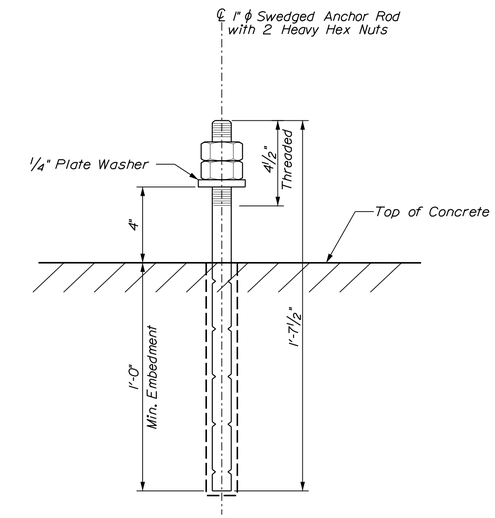

ANCHOR ROD DETAIL

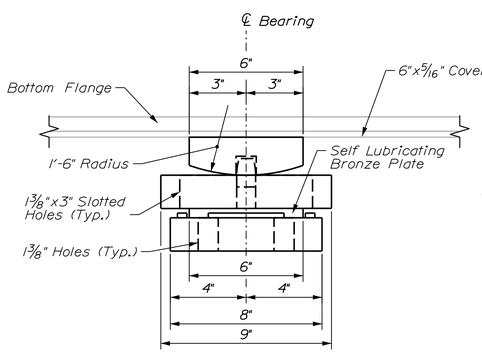

FRONT VIEW

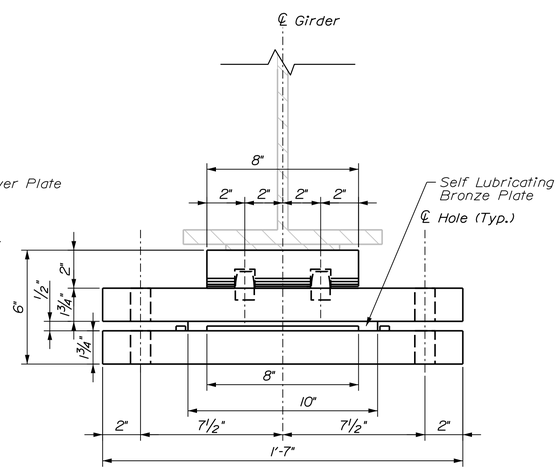

SIDE VIEW

SLIDING PLATE EXPANSION BEARING ASSEMBLY

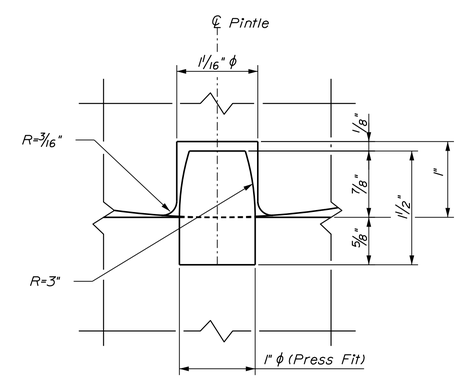

PINTLE DETAIL

BEARING NOTES

1. Bearing Assemblies, masonry plates, and pintles shall meet the requirements of ASTM A709, Grade 50. Charpy V-notch tests are not required for steel used in bearing masonry plates.
2. Masonry plate shall be galvanized in accordance with Section 506 Structural Steel Coatings.
3. Anchor bolts shall be swedged or threaded on the embedded portion of the rod. Anchor rods shall meet the requirements of ASTM F1554, Grade 105, and be galvanized according to ASTM A 153.
4. Anchor rods shall be drilled and grouted in place using a material listed on the Maine Department of Transportation Qualified Products List of Concrete Adhesive Anchoring Systems.
5. Upset the threads of the anchor rods after assembly. Touch up damaged galvanized areas with zinc-rich paint. Cost included in bearing item.
6. The existing anchor rods for the bearing assemblies and masonry plate being replaced shall be cut flush with the existing seat. Payment for removal and installation of new anchor rods is incidental to the Bearing Installation Pay Item.
7. All bearings shall be marked prior to shipping. The marks shall include the bearing location on the bridge and a direction arrow which points upstation. All marks shall be permanent and shall be visible after the bearing is installed.
8. Bearings shall be covered during transit.
9. All necessary precautions shall be taken to protect bearing components from field weld flash and splatter.
10. Contractor shall verify bearing dimensions to ensure they match existing bearing dimensions.
11. Masonry plates shall be placed on a 1/8" thick preformed pad in accordance with the Standard Specifications, Subsection 523.09, Installation of Bearings.
12. At the location of the new bearing assemblies, the concrete pedestal shall be dressed one inch larger all around than the size of the masonry plate to match the existing bottom of masonry plate elevation (prior to demolition) exactly.

STATE OF MAINE
DEPARTMENT OF TRANSPORTATION
PROJECT NO.
25631 06
WIN 25631.08 & 25631.09
BRIDGE NO. 1449 & 5984
BRIDGE PLANS

		BY	DATE
PROJ. MANAGER	J. BRASK		
DESIGN-DETAILED	S. LINDSLEY	E. MORRISON	06-24
CHECKED-REVIEWED	D. WHITE	B. COLBURN	06-24
DESIGN2-DETAILED2	N. EDMAN	J. FITZ	06-24
DESIGN3-DETAILED3			
REVISIONS 1			
REVISIONS 2			
REVISIONS 3			
REVISIONS 4			
FIELD CHANGES			

SIGNATURE

P.E. NUMBER

DATE

I-95 SB & NB OVER WEBB RD
BRIDGE NO. 1449 & 5984
PITTSFIELD SOMERSET COUNTY

SLIDING PLATE
BEARING DETAILS

SHEET NUMBER
65
OF 110

Filename: ...\0xx_Webb_Bearing_Details_3.dgn Division: Username: jfitzpatrick Date:6/10/2024

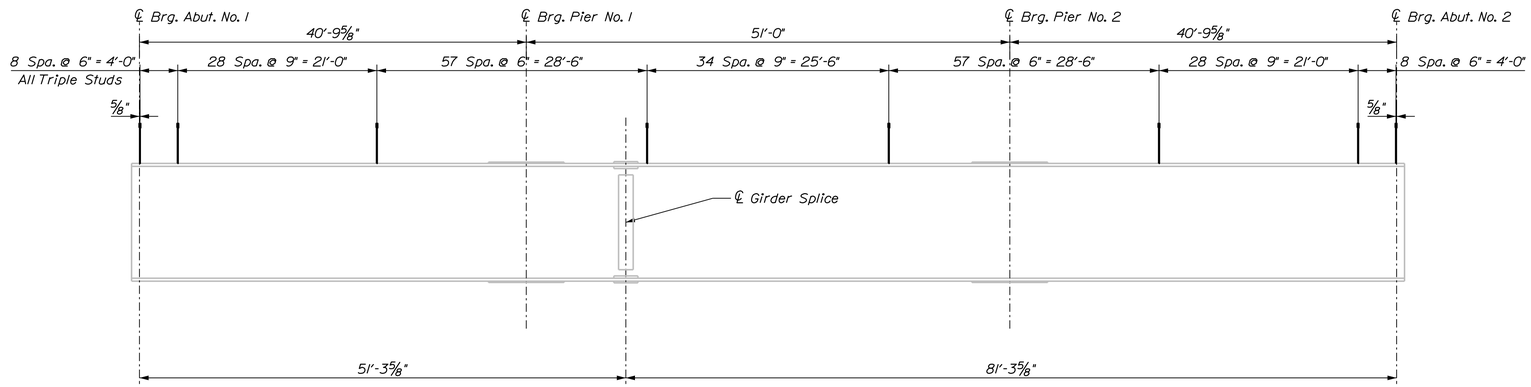

SHEAR CONNECTOR LAYOUT

663 (221 x 3 rows) Studs Per Girder
(3978 Studs Total)

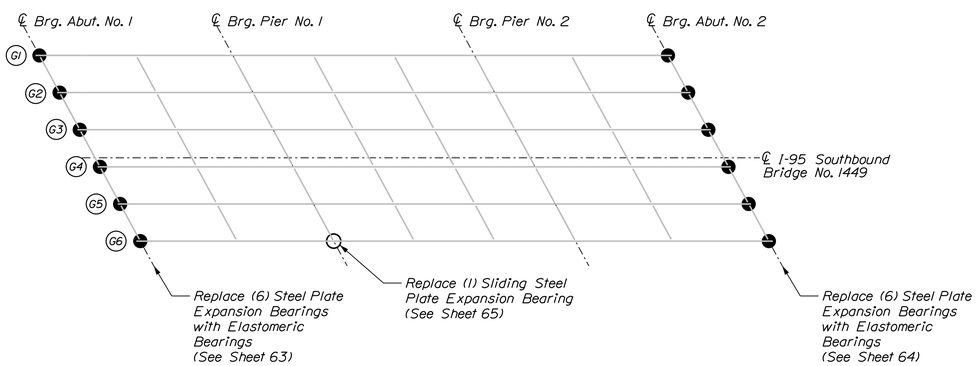

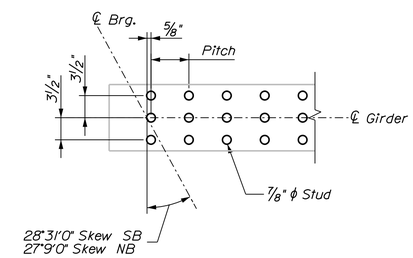

SHEAR CONNECTOR DETAIL

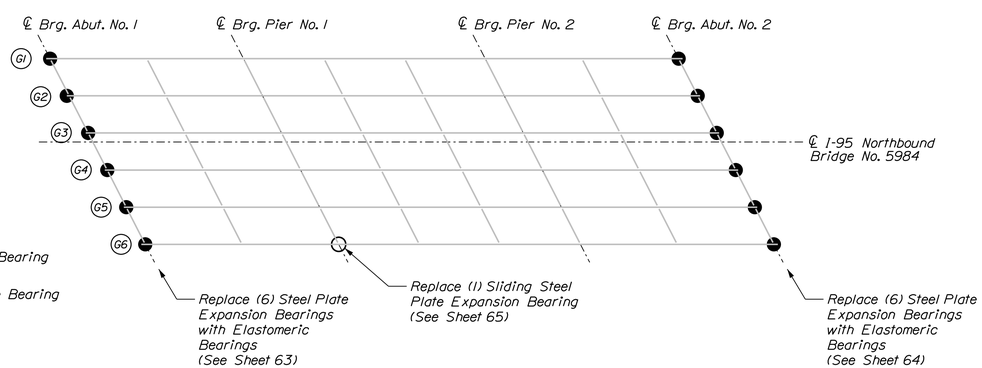

KEY PLAN

LEGEND

- ● Proposed Elastomeric Bearing Replacement
- ○ Proposed Sliding Plate Bearing Replacement

SHEAR CONNECTOR NOTES

1. Dimensions are measured along centerline of the girder.
2. Prior to installing the proposed shear studs, the Contractor shall clean the top flange so that it is free of debris, rust, scale, oil and other contaminates that would adversely affect the welding operation. Payment for cleaning the top flange for installation of proposed shear studs shall be incidental to Item 505.08, Shear Connectors. Existing steel may be coated with a lead-based paint system. See General Notes for more information.
3. The proposed shear studs shall be 7/8" diameter. Studs shall penetrate into the deck a minimum of 2" and maintain a clear cover of 2" to the top of the studs.
4. If existing shear connectors are present, they shall be removed such that they project 1 inch maximum above the top of the existing top flange unless they conflict with the installation of the new shear connectors or any other work. If the existing shear connectors interfere with installation of the new shear connectors or any other work, they shall be removed completely and ground flush with the top flange. All costs associated with this work shall be incidental to related Contract items.
5. Pitch spacing may be adjusted at bolted splices to avoid splice bolts.

STATE OF MAINE
DEPARTMENT OF TRANSPORTATION

PROJECT NO.
25631.06

WIN 25631.08 & 25631.09

BRIDGE NO. 1449 & 5984

BRIDGE PLANS

PROJ. MANAGER	J. BRASK	BY	DATE
DESIGN-DETAILED	S. LINDSLEY	E. MORRISON	06-24
CHECKED-REVIEWED	D. WHITE	B. COLBURN	06-24
DESIGN2-DETAILED2	N. EDMAN	J. FITZ	06-24
DESIGN3-DETAILED3			
REVISIONS 1			
REVISIONS 2			
REVISIONS 3			
REVISIONS 4			
FIELD CHANGES			

SIGNATURE

P.E. NUMBER

DATE

I-95 SB & NB OVER WEBB RD
BRIDGE NO. 1449 & 5984

PITTSFIELD SOMERSET COUNTY

KEY PLAN & SHEAR CONNECTOR LAYOUT

SHEET NUMBER

66

OF 110

Filename: ...\Oxx_Webb_Shear_Stud_Layout.dgn Division: Username: jfitzpatrick Date:6/10/2024

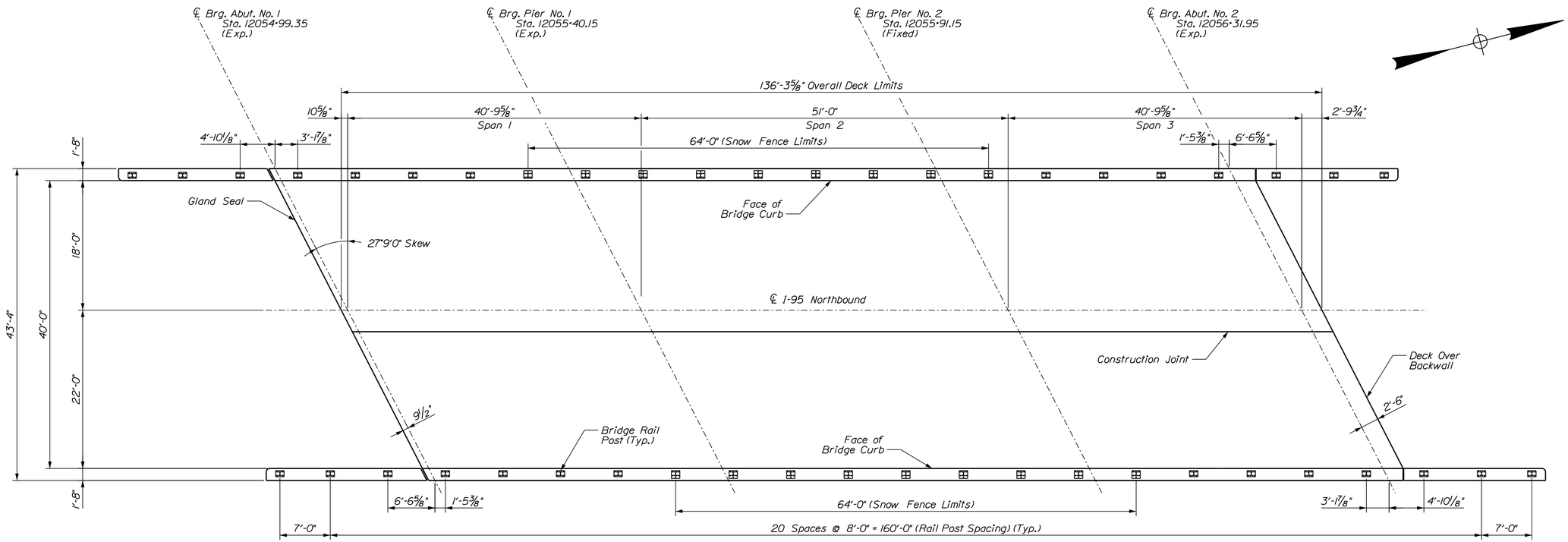

SUPERSTRUCTURE PLAN - BRIDGE NO. 5984

SUPERSTRUCTURE NOTES

1. The theoretical blocking used for design of the structure is 2 inches at the centerlines of bearing of the abutments and piers as measured from the top of the rolled beam flange. Refer to Standard Detail 502(03) for blocking details.
2. Reinforcing steel shall have a minimum concrete cover of 2 inches unless otherwise noted.
3. Form a one inch V-groove on the fascias at the horizontal joint between the curb and slab.
4. The superstructure slab concrete shall be placed continuously and shall be kept plastic until the entire placement has been made.
5. Precast Concrete Deck Panels are not allowed on this project.
6. Deck reinforcement shall be Plain Steel and curb reinforcement shall be Low-Carbon Chromium unless otherwise noted.
7. Contractor shall stagger the splice locations of the longitudinal bars.

BRIDGE NO. 5984 - BOTTOM OF SLAB ELEVATIONS

GIRDER	CL BRG. ABUT. NO. 1	0.1 x L	0.2 x L	0.3 x L	0.4 x L	0.5 x L	0.6 x L	0.7 x L	0.8 x L	0.9 x L	CL BRG. PIER NO. 1	0.1 x L	0.2 x L	0.3 x L	0.4 x L	0.5 x L	0.6 x L	0.7 x L	0.8 x L	0.9 x L	CL BRG. PIER NO. 2	0.1 x L	0.2 x L	0.3 x L	0.4 x L	0.5 x L	0.6 x L	0.7 x L	0.8 x L	0.9 x L	CL BRG. ABUT. NO. 2
G1	252.36	252.29	252.22	252.14	252.06	251.98	251.90	251.82	251.74	251.66	251.58	251.48	251.39	251.29	251.20	251.10	251.00	250.90	250.80	250.70	250.60	250.52	250.44	250.37	250.29	250.22	250.14	250.06	249.98	249.89	249.81
G2	252.42	252.35	252.28	252.20	252.12	252.04	251.96	251.88	251.80	251.72	251.64	251.54	251.45	251.36	251.26	251.17	251.07	250.96	250.86	250.76	250.66	250.58	250.50	250.43	250.35	250.28	250.20	250.12	250.04	249.95	249.87
G3	252.48	252.41	252.34	252.26	252.18	252.10	252.02	251.94	251.86	251.78	251.70	251.60	251.51	251.42	251.32	251.22	251.12	251.02	250.92	250.82	250.71	250.64	250.56	250.49	250.41	250.34	250.26	250.18	250.10	250.01	249.93
G4	252.33	252.26	252.19	252.11	252.04	251.96	251.88	251.79	251.71	251.63	251.55	251.45	251.36	251.27	251.17	251.08	250.98	250.88	250.77	250.67	250.57	250.49	250.42	250.34	250.27	250.19	250.11	250.03	249.95	249.87	249.78
G5	252.12	252.05	251.97	251.90	251.82	251.74	251.66	251.58	251.50	251.42	251.34	251.24	251.15	251.05	250.96	250.86	250.76	250.66	250.56	250.45	250.35	250.28	250.20	250.13	250.05	249.98	249.90	249.82	249.74	249.65	249.57
G6	251.91	251.83	251.76	251.68	251.61	251.53	251.45	251.36	251.28	251.20	251.12	251.03	250.93	250.84	250.74	250.65	250.55	250.45	250.34	250.24	250.14	250.06	249.99	249.91	249.84	249.76	249.68	249.60	249.52	249.44	249.36

STATE OF MAINE
DEPARTMENT OF TRANSPORTATION
PROJECT NO.
25631 06
WIN 25631.09
BRIDGE NO. 5984
BRIDGE PLANS

		BY	DATE
PROJ. MANAGER	J. BRASK		
DESIGN-DETAILED	S. LINDSLEY	E. MORRISON	06-24
CHECKED-REVIEWED	D. WHITE	B. COLBURN	06-24
DESIGN2-DETAILED2	N. EDMAN	J. FITZ	06-24
DESIGN3-DETAILED3			
REVISIONS 1			
REVISIONS 2			
REVISIONS 3			
REVISIONS 4			
FIELD CHANGES			

SIGNATURE
P.E. NUMBER
DATE

I-95 NB OVER WEBB RD
BRIDGE NO. 5984
PITTSFIELD SOMERSET COUNTY

SUPERSTRUCTURE PLAN

SHEET NUMBER
67
OF 110

Filename: ...\0xx_Webb_Superstructure_Plan_2.dgn Division: Username: jfitzpatrick Date:6/10/2024

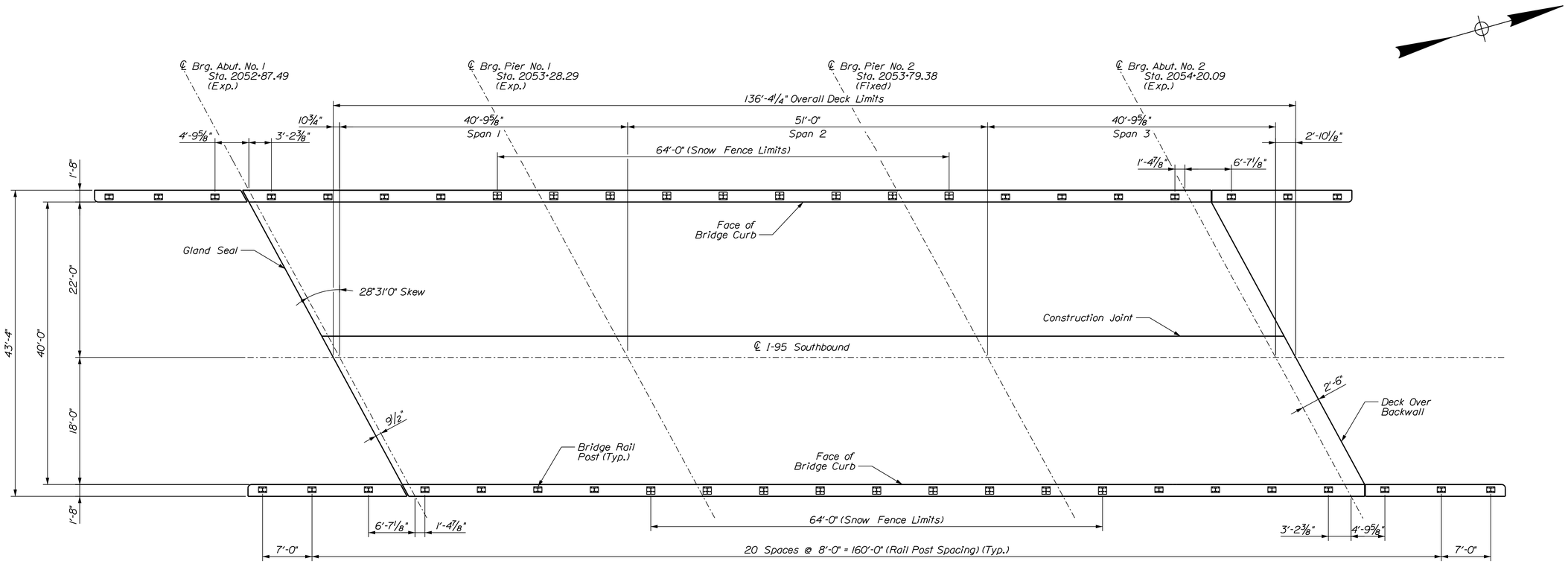

SUPERSTRUCTURE PLAN - BRIDGE NO. 1449

GIRDER	BRIDGE NO. 1449 - BOTTOM OF SLAB ELEVATIONS																														
	CL BRG. ABUT. NO. 1	0.1 x L	0.2 x L	0.3 x L	0.4 x L	0.5 x L	0.6 x L	0.7 x L	0.8 x L	0.9 x L	CL BRG. PIER NO. 1	0.1 x L	0.2 x L	0.3 x L	0.4 x L	0.5 x L	0.6 x L	0.7 x L	0.8 x L	0.9 x L	CL BRG. PIER NO. 2	0.1 x L	0.2 x L	0.3 x L	0.4 x L	0.5 x L	0.6 x L	0.7 x L	0.8 x L	0.9 x L	CL BRG. ABUT. NO. 2
G1	269.79	269.71	269.63	269.55	269.46	269.37	269.29	269.20	269.11	269.02	268.93	268.82	268.72	268.62	268.51	268.40	268.29	268.18	268.07	267.96	267.85	267.76	267.68	267.59	267.51	267.43	267.34	267.25	267.16	267.07	266.98
G2	269.84	269.76	269.68	269.59	269.51	269.42	269.33	269.24	269.15	269.06	268.98	268.87	268.77	268.66	268.56	268.45	268.34	268.23	268.12	268.00	267.89	267.81	267.72	267.64	267.56	267.48	267.39	267.30	267.21	267.12	267.03
G3	269.89	269.81	269.72	269.64	269.56	269.47	269.38	269.29	269.20	269.11	269.02	268.92	268.81	268.71	268.61	268.50	268.39	268.28	268.16	268.05	267.94	267.85	267.77	267.69	267.61	267.52	267.44	267.35	267.26	267.17	267.07
G4	269.87	269.79	269.70	269.62	269.53	269.45	269.36	269.27	269.18	269.09	269.00	268.89	268.79	268.69	268.59	268.48	268.37	268.26	268.14	268.03	267.92	267.83	267.75	267.67	267.58	267.50	267.41	267.33	267.24	267.15	267.05
G5	269.64	269.56	269.48	269.39	269.31	269.22	269.13	269.04	268.95	268.86	268.77	268.67	268.57	268.46	268.36	268.25	268.14	268.03	267.92	267.80	267.69	267.61	267.52	267.44	267.36	267.27	267.19	267.10	267.01	266.92	266.83
G6	269.41	269.33	269.25	269.16	269.08	268.99	268.90	268.81	268.72	268.63	268.55	268.44	268.34	268.23	268.13	268.02	267.91	267.80	267.69	267.58	267.47	267.38	267.30	267.21	267.13	267.04	266.96	266.87	266.78	266.69	266.60

STATE OF MAINE
DEPARTMENT OF TRANSPORTATION

PROJECT NO.
2563106

WIN 25631.08

BRIDGE NO. 1449

BRIDGE PLANS

PROJ. MANAGER	J. BRASK	BY	DATE
DESIGN-DETAILED	S. LINDSLEY	E. MORRISON	06-24
CHECKED-REVIEWED	D. WHITE	B. COLBURN	06-24
DESIGN2-DETAILED2	N. EDMAN	J. FITZ	06-24
DESIGN3-DETAILED3			
REVISIONS 1			
REVISIONS 2			
REVISIONS 3			
REVISIONS 4			
FIELD CHANGES			

SIGNATURE

P.E. NUMBER

DATE

I-95 SB OVER WEBB RD
BRIDGE NO. 1449

PITTSFIELD SOMERSET COUNTY

SUPERSTRUCTURE PLAN

SHEET NUMBER

68

OF 110

Filename: ...\0xx_Webb_Superstructure_Plan_1.dgn Division: Username: jfitzpatrick Date:6/10/2024

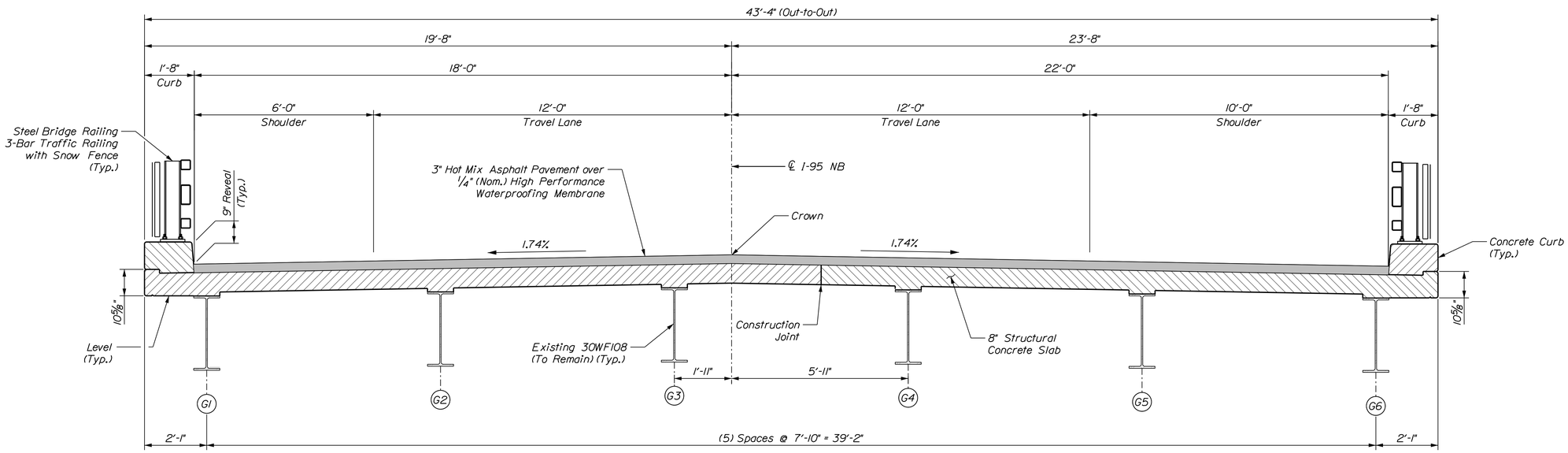

TRANSVERSE SECTION (WEBB ROAD)

Northbound shown, Southbound Crown and Lanes opposite hand.

Filename: ...\0xx_Webb_Typical_Section.dgn Division: Username: jfitzpatrick Date:6/10/2024

STATE OF MAINE
DEPARTMENT OF TRANSPORTATION

PROJECT NO.
25631 06

WIN 25631.08 & 25631.09

BRIDGE NO. 1449 & 5984

BRIDGE PLANS

PROJ. MANAGER	J. BRASK	BY	DATE
DESIGN-DETAILED	S. LINDSLEY	E. MORRISON	06-24
CHECKED-REVIEWED	D. WHITE	B. COLBURN	06-24
DESIGN2-DETAILED2	N. EDMAN	J. FITZ	06-24
DESIGN3-DETAILED3			
REVISIONS 1			
REVISIONS 2			
REVISIONS 3			
REVISIONS 4			
FIELD CHANGES			

SIGNATURE

P.E. NUMBER

DATE

I-95 SB & NB OVER WEBB RD
BRIDGE NO. 1449 & 5984

PITTSFIELD SOMERSET COUNTY

TRANSVERSE SECTIONS

SHEET NUMBER

69

OF 110

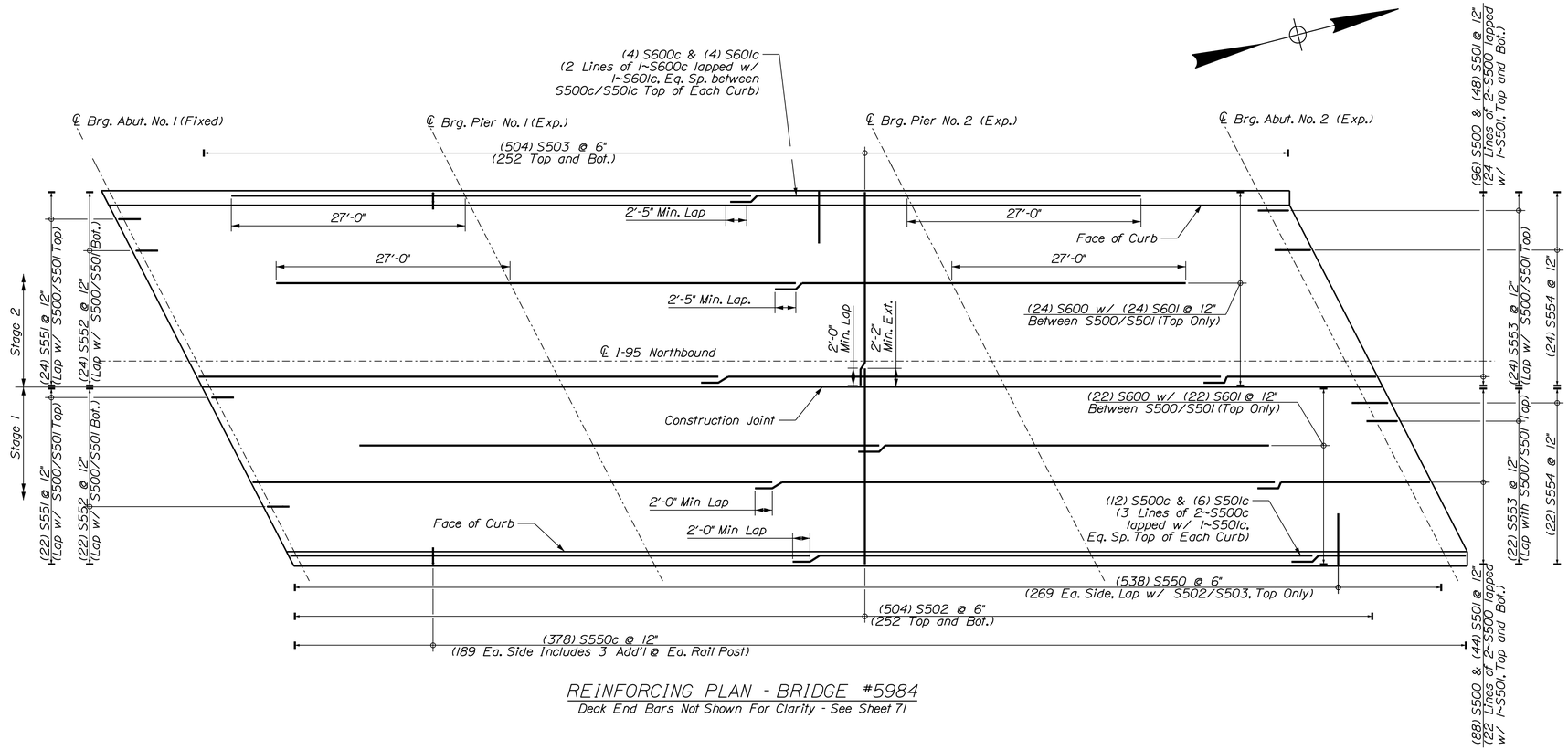

REINFORCING PLAN - BRIDGE #5984

Deck End Bars Not Shown For Clarity - See Sheet 71

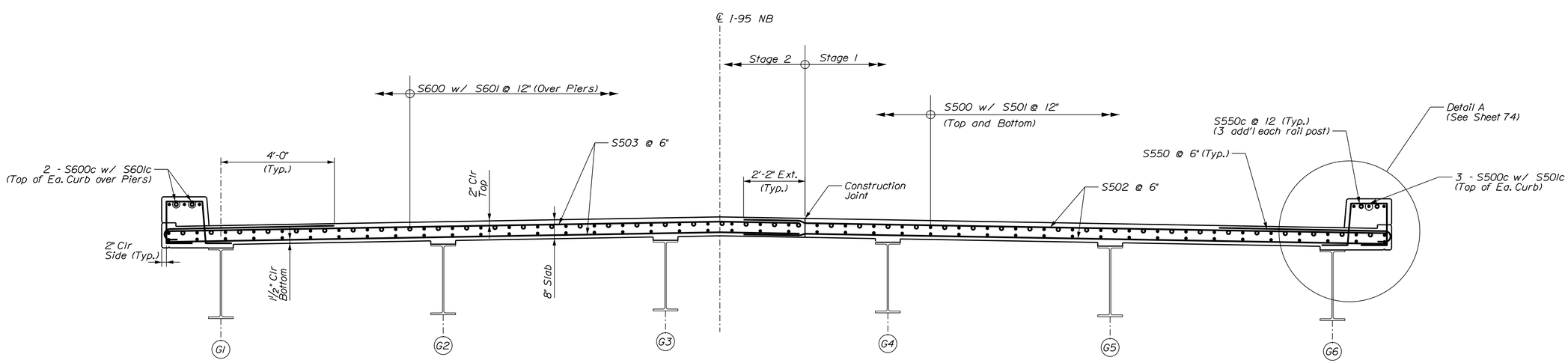

TRANSVERSE SECTION

I-95 Northbound Shown
I-95 Southbound Similar

STATE OF MAINE
DEPARTMENT OF TRANSPORTATION

PROJECT NO.
25631.06

WIN 25631.08

BRIDGE NO. 1449

BRIDGE PLANS

PROJ. MANAGER	J. BRASK	BY	DATE
DESIGN-DETAILED	S. LINDSLEY	E. MORRISON	06-24
CHECKED-REVIEWED	D. WHITE	B. COLBURN	06-24
DESIGN2-DETAILED2	N. EDMAN	J. FITZ	06-24
DESIGN3-DETAILED3			
REVISIONS 1			
REVISIONS 2			
REVISIONS 3			
REVISIONS 4			
FIELD CHANGES			

SIGNATURE

P.E. NUMBER

DATE

I-95 NB OVER WEBB RD
BRIDGE NO. 5984

PITTSFIELD SOMERSET COUNTY

DECK REINFORCING

SHEET NUMBER

70

OF 110

Filename: ...\0xx_Webb_Reinforcing_Plan_1.dgn Division: Username: jfitzpatrick Date:6/10/2024

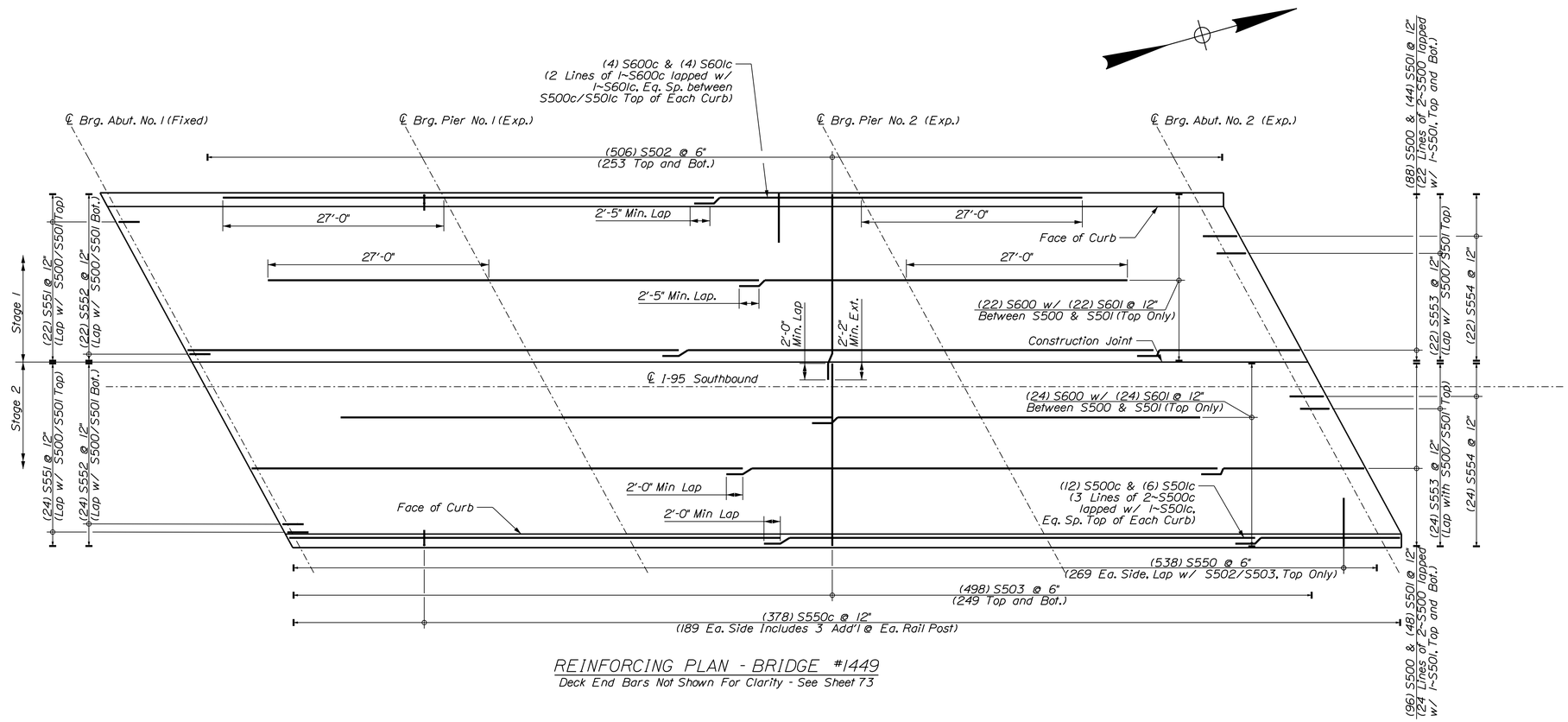

REINFORCING PLAN - BRIDGE #1449

Deck End Bars Not Shown For Clarity - See Sheet 73

STATE OF MAINE
DEPARTMENT OF TRANSPORTATION

PROJECT NO.
2563106

WIN 25631.09

BRIDGE NO. 5984

BRIDGE PLANS

PROJ. MANAGER	J. BRASK	BY	DATE
DESIGN-DETAILED	S. LINDSLEY	E. MORRISON	06-24
CHECKED-REVIEWED	D. WHITE	B. COLBURN	06-24
DESIGN2-DETAILED2	N. EDMAN	J. FITZ	06-24
DESIGN3-DETAILED3			
REVISIONS 1			
REVISIONS 2			
REVISIONS 3			
REVISIONS 4			
FIELD CHANGES			

SIGNATURE

P.E. NUMBER

DATE

I-95 SB OVER WEBB RD
BRIDGE NO. 1449

PITTSFIELD SOMERSET COUNTY

DECK REINFORCING

SHEET NUMBER

71

OF 110

Filename: ...\0xx_Webb_Reinforcing_Plan_2.dgn Division: Username: jfitzpatrick Date:6/10/2024

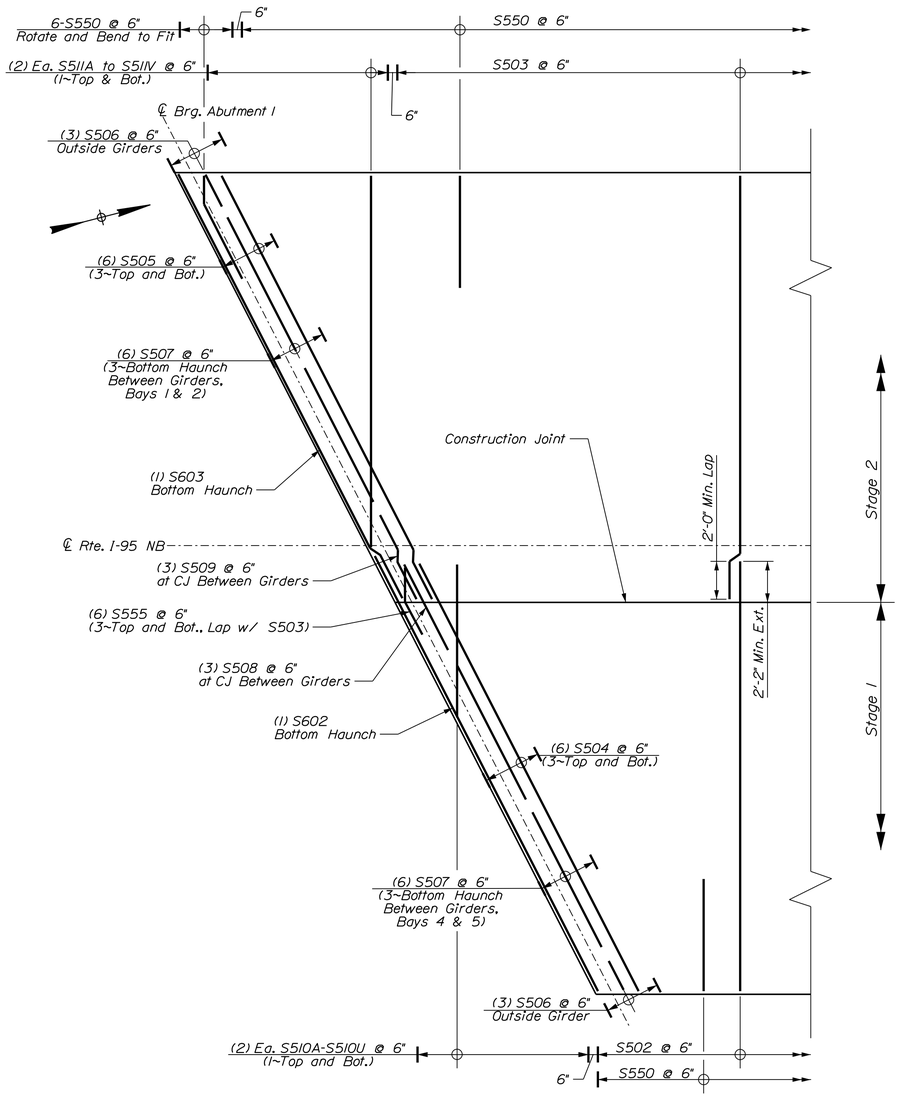

ABUTMENT 1 DECK END DETAIL - BRIDGE #5984

Longitudinal and Curb Bars not Shown for Clarity

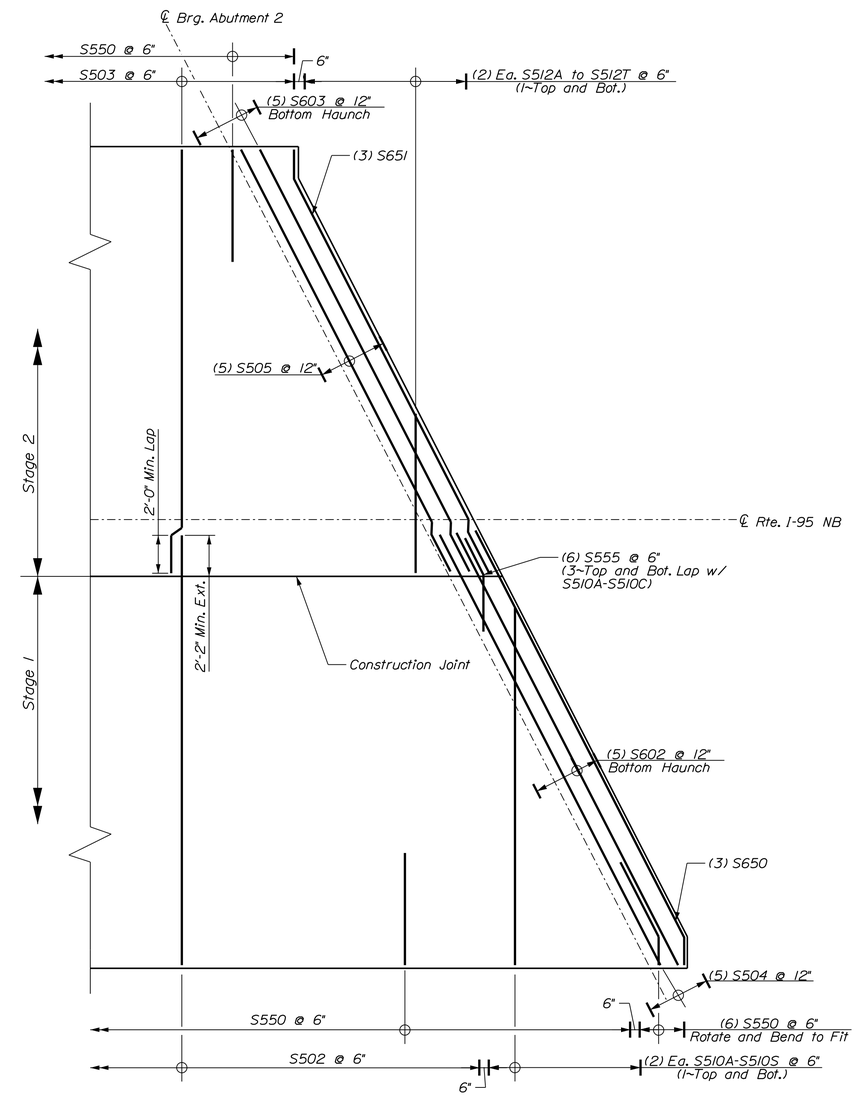

ABUTMENT 2 DECK END DETAIL - BRIDGE #5984

Longitudinal and Curb Bars not Shown for Clarity

STATE OF MAINE
DEPARTMENT OF TRANSPORTATION

PROJECT NO.
2563106

WIN 25631.09

BRIDGE NO. 5984

BRIDGE PLANS

		BY	DATE
PROJ. MANAGER	J. BRASK		
DESIGN-DETAILED	S. LINDSLEY	E. MORRISON	06-24
CHECKED-REVIEWED	D. WHITE	B. COLBURN	06-24
DESIGN2-DETAILED2	N. EDMAN	J. FITZ	06-24
DESIGN3-DETAILED3			
REVISIONS 1			
REVISIONS 2			
REVISIONS 3			
REVISIONS 4			
FIELD CHANGES			

SIGNATURE

P.E. NUMBER

DATE

I-95 NB OVER WEBB RD
BRIDGE NO. 5984

PITTSFIELD SOMERSET COUNTY

SUPERSTRUCTURE DETAILS

SHEET NUMBER

72

OF 110

Filename: ...\0xx_Webb_Deck_Corner_Details_1.dgn Division: Username: jfitzpatrick Date:6/10/2024

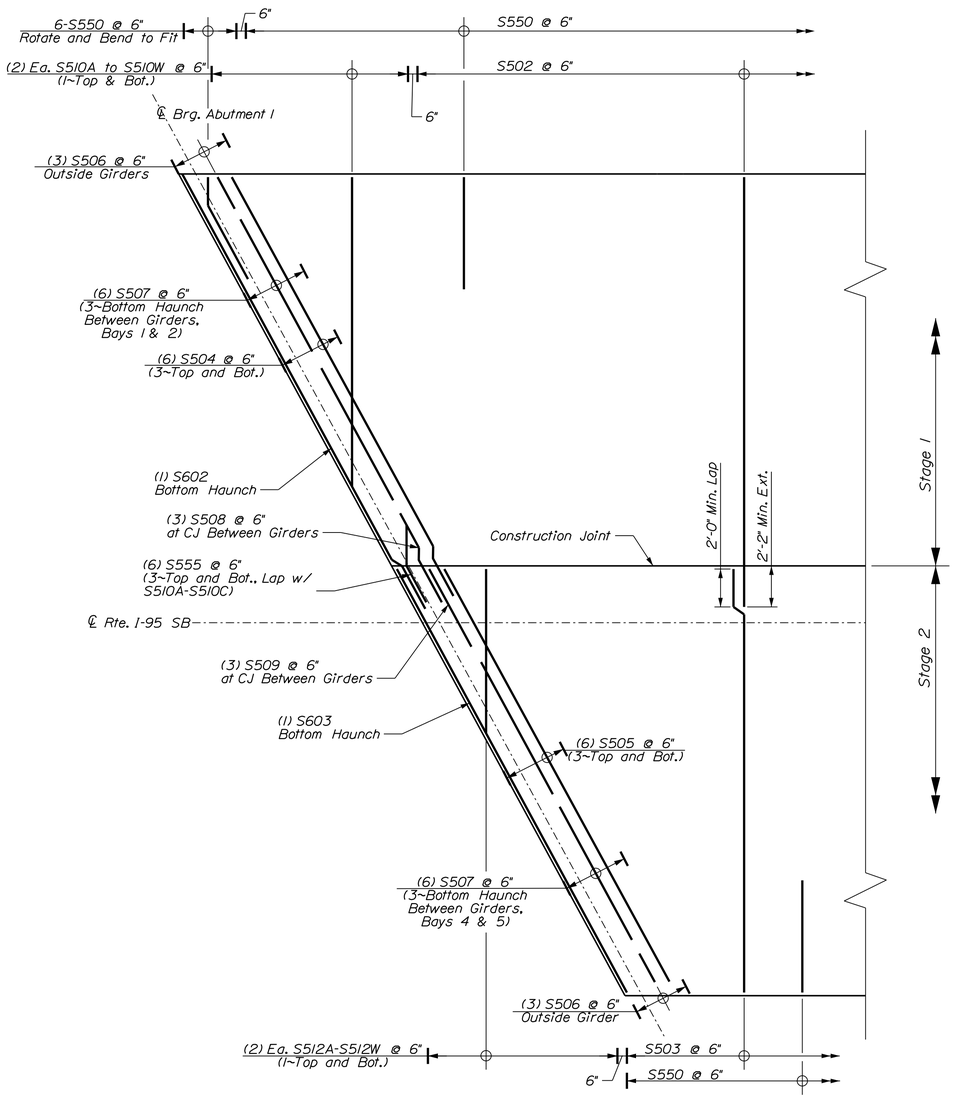

ABUTMENT 1 DECK END DETAIL - BRIDGE #1449

Longitudinal and Curb Bars not Shown for Clarity

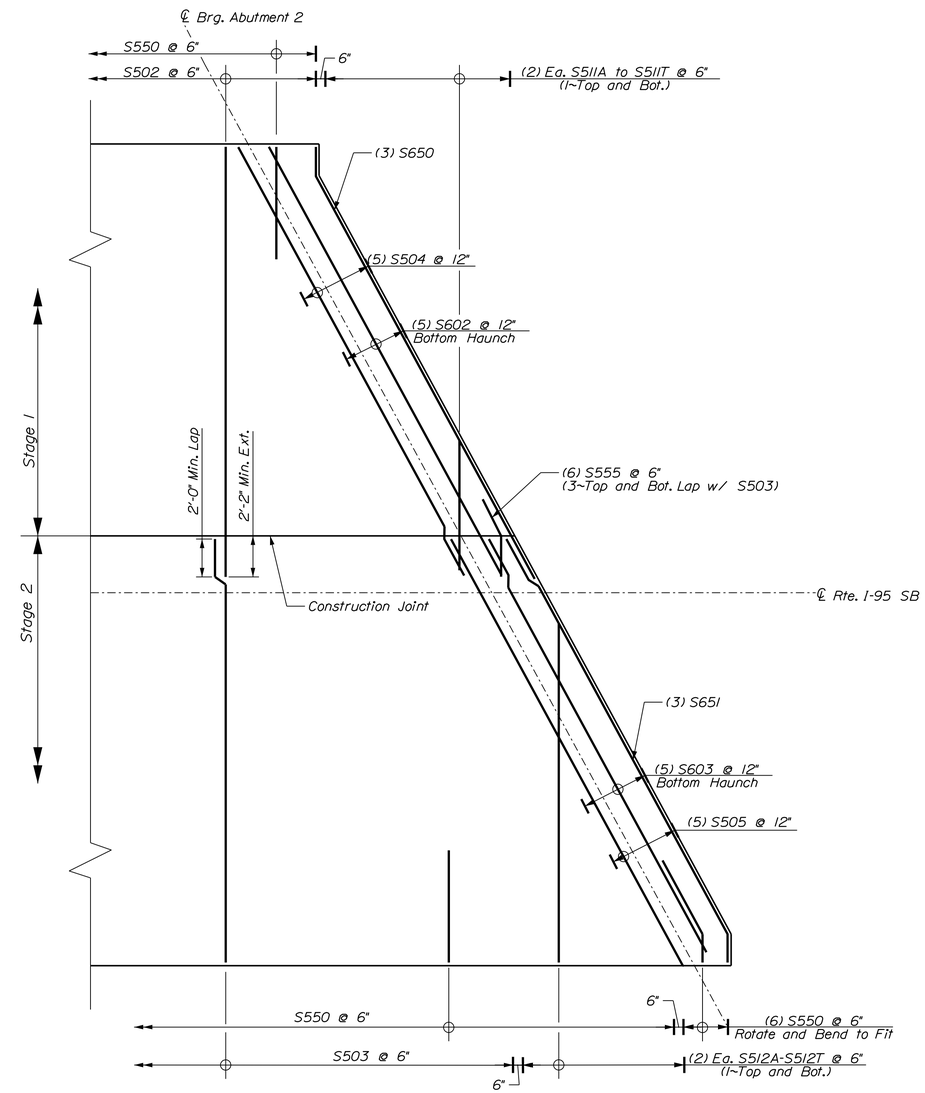

ABUTMENT 2 DECK END DETAIL - BRIDGE #1449

Longitudinal and Curb Bars not Shown for Clarity

STATE OF MAINE
DEPARTMENT OF TRANSPORTATION

PROJECT NO.
2563106

WIN 25631.08

BRIDGE NO. 1449

BRIDGE PLANS

PROJ. MANAGER	J. BRASK	BY	DATE
DESIGN-DETAILED	S. LINDSLEY	E. MORRISON	06-24
CHECKED-REVIEWED	D. WHITE	B. COLBURN	06-24
DESIGN2-DETAILED2	N. EDMAN	J. FITZ	06-24
DESIGN3-DETAILED3			
REVISIONS 1			
REVISIONS 2			
REVISIONS 3			
REVISIONS 4			
FIELD CHANGES			

SIGNATURE

P.E. NUMBER

DATE

I-95 SB OVER WEBB RD
BRIDGE NO. 1449

PITTSFIELD SOMERSET COUNTY

SUPERSTRUCTURE DETAILS

SHEET NUMBER

73

OF 110

Filename: ...\0xx_Webb_Deck_Corner_Details_2.dgnDivision: Username: jfitzpatrick Date:6/10/2024

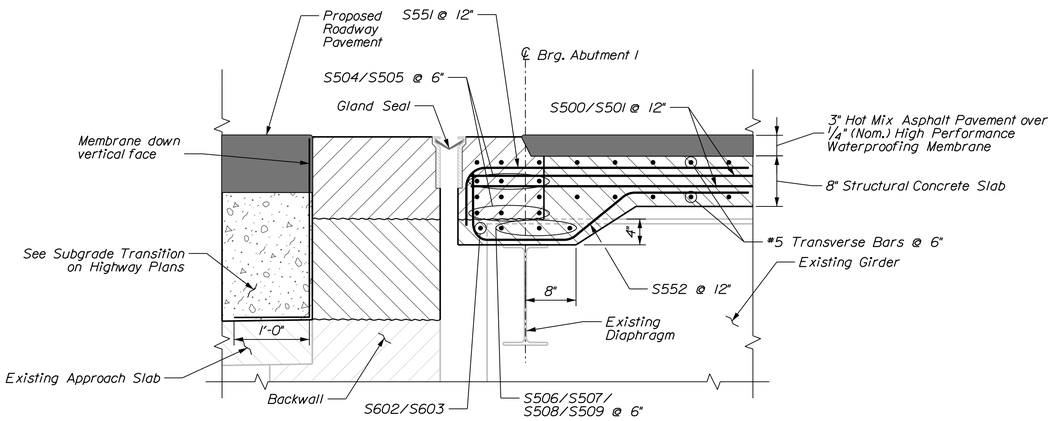

ABUTMENT 1 DECK END SECTION

(PARALLEL TO GIRDER)
Partial Height Backwall Replacement Shown.
Full Height Backwall Replacement Similar

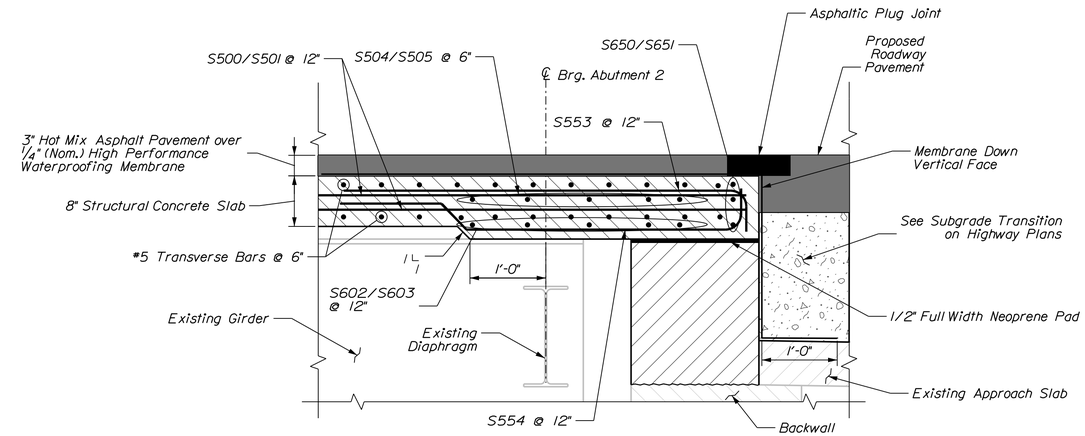

ABUTMENT 2 DECK END SECTION

(PARALLEL TO GIRDER)
Partial Height Backwall Replacement Shown.
Full Height Backwall Replacement Similar

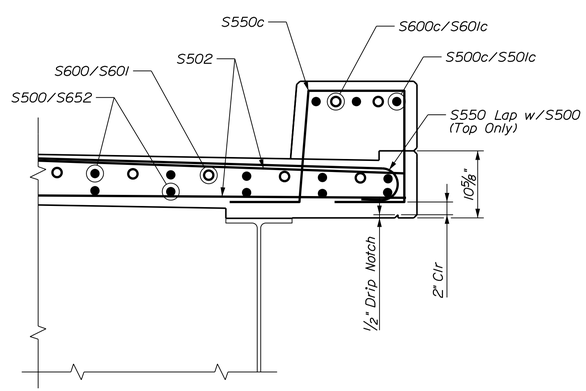

DETAIL A

Right Overhang Shown
Left Overhang Similar

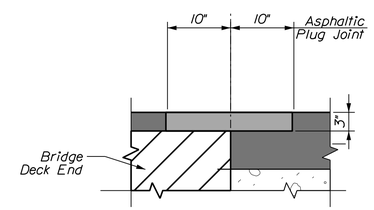

ASPHALTIC PLUG JOINT DETAIL

GLAND SEAL NOTES

1. The gland seal to be furnished shall have minimum Movement Ratings as follows:

   Abutment No. 1 = 1.25 Inches

2. To facilitate staged construction, the sliding cover plate detail for the curbs shall be modified to use countersunk bolts.

SUPERSTRUCTURE NOTES

1. Payment for the neoprene pad will be incidental to related Contract Items.

STATE OF MAINE
DEPARTMENT OF TRANSPORTATION
PROJECT NO. 25631.06
WIN 25631.08 & 25631.09
BRIDGE NO. 1449 & 5984
BRIDGE PLANS

		BY	DATE
PROJ. MANAGER	J. BRASK		
DESIGN-DETAILED	S. LINDSLEY	E. MORRISON	06-24
CHECKED-REVIEWED	D. WHITE	B. COLBURN	06-24
DESIGN2-DETAILED2	N. EDMAN	J. FITZ	06-24
DESIGN3-DETAILED3			
REVISIONS 1			
REVISIONS 2			
REVISIONS 3			
REVISIONS 4			
FIELD CHANGES			

SIGNATURE
P.E. NUMBER
DATE

I-95 SB & NB OVER WEBB RD
BRIDGE NO. 1449 & 5984
PITTSFIELD SOMERSET COUNTY

SUPERSTRUCTURE DETAILS

SHEET NUMBER
74
OF 110

Filename: ...\0xx_Webb_Superstructure_Details.dgn Division: Username: jfitzpatrick Date:6/10/2024

STRAIGHT BARS

MARK	QTY.	LENGTH	LOCATION
Approach Slabs (Plain Steel)			
AS501	15	4'-1"	AB 1 Stage 2 Transverse
AS502	15	6'-0"	AB 1 Stage 1 Transverse
AS503	15	4'-1"	AB 2 Stage 1 Transverse
AS504	15	10'-2"	AB 2 Stage 2 Transverse
AS601	49	14'-8"	Approach Slab Longitudinal
Superstructure (Low-Carbon Chromium)			
S500c	12	60'-0"	Curb Longitudinal
S501c	6	20'-11"	Curb Longitudinal
S600c	4	60'-0"	Curb Longitudinal
S601c	4	47'-5"	Curb Longitudinal
Superstructure (Plain Steel)			
S500	184	60'-0"	Deck Longitudinal
S501	92	20'-11"	Deck Longitudinal
S502	506	22'-8"	Deck Transverse Stage 1
S503	498	22'-4"	Deck Transverse Stage 2
S504	11	25'-7"	Deck End Stage 1
S505	11	25'-6"	Deck End Stage 2
S506	6	2'-0"	Deck End
S507	12	8'-6"	Deck End
S508	3	5'-3"	Deck End
S509	3	5'-3"	Deck End
S510A	2	21'-9"	Deck Transverse Stage 1
S510B	2	20'-10"	Deck Transverse Stage 1
S510C	2	19'-11"	Deck Transverse Stage 1
S510D	2	19'-0"	Deck Transverse Stage 1
S510E	2	18'-1"	Deck Transverse Stage 1
S510F	2	17'-2"	Deck Transverse Stage 1
S510G	2	16'-3"	Deck Transverse Stage 1
S510H	2	15'-4"	Deck Transverse Stage 1
S510J	2	14'-5"	Deck Transverse Stage 1
S510K	2	13'-6"	Deck Transverse Stage 1
S510L	2	12'-7"	Deck Transverse Stage 1
S510M	2	11'-8"	Deck Transverse Stage 1
S510N	2	10'-9"	Deck Transverse Stage 1
S510P	2	9'-9"	Deck Transverse Stage 1
S510Q	2	8'-10"	Deck Transverse Stage 1
S510R	2	7'-11"	Deck Transverse Stage 1
S510S	2	7'-0"	Deck Transverse Stage 1
S510T	2	6'-1"	Deck Transverse Stage 1
S510U	2	5'-2"	Deck Transverse Stage 1
S510V	2	4'-3"	Deck Transverse Stage 1
S510W	2	3'-4"	Deck Transverse Stage 1
S511A	2	20'-2"	Deck Transverse Stage 1
S511B	2	19'-3"	Deck Transverse Stage 1
S511C	2	18'-4"	Deck Transverse Stage 1
S511D	2	17'-5"	Deck Transverse Stage 1
S511E	2	16'-6"	Deck Transverse Stage 1
S511F	2	15'-7"	Deck Transverse Stage 1
S511G	2	14'-8"	Deck Transverse Stage 1
S511H	2	13'-9"	Deck Transverse Stage 1
S511J	2	12'-10"	Deck Transverse Stage 1
S511K	2	11'-11"	Deck Transverse Stage 1
S511L	2	11'-0"	Deck Transverse Stage 1
S511M	2	10'-1"	Deck Transverse Stage 1
S511N	2	9'-2"	Deck Transverse Stage 1
S511P	2	8'-2"	Deck Transverse Stage 1
S511Q	2	7'-3"	Deck Transverse Stage 1
S511R	2	6'-4"	Deck Transverse Stage 1
S511S	2	5'-5"	Deck Transverse Stage 1
S511T	2	4'-6"	Deck Transverse Stage 1
S512A	4	21'-5"	Deck Transverse Stage 2
S512B	4	20'-6"	Deck Transverse Stage 2
S512C	4	19'-7"	Deck Transverse Stage 2
S512D	4	18'-8"	Deck Transverse Stage 2
S512E	4	17'-9"	Deck Transverse Stage 2
S512F	4	16'-10"	Deck Transverse Stage 2
S512G	4	15'-11"	Deck Transverse Stage 2
S512H	4	15'-0"	Deck Transverse Stage 2

MARK	QTY.	LENGTH	LOCATION
Superstructure (Plain Steel)			
S512J	4	14'-1"	Deck Transverse Stage 2
S512K	4	13'-2"	Deck Transverse Stage 2
S512L	4	12'-3"	Deck Transverse Stage 2
S512M	4	11'-4"	Deck Transverse Stage 2
S512N	4	10'-5"	Deck Transverse Stage 2
S512P	4	9'-5"	Deck Transverse Stage 2
S512Q	4	8'-6"	Deck Transverse Stage 2
S512R	4	7'-7"	Deck Transverse Stage 2
S512S	4	6'-8"	Deck Transverse Stage 2
S512T	4	5'-9"	Deck Transverse Stage 2
S512U	2	4'-10"	Deck Transverse Stage 2
S512V	2	3'-11"	Deck Transverse Stage 2
S512W	2	3'-0"	Deck Transverse Stage 2
S600	46	60'-0"	Deck Longitudinal
S601	46	47'-5"	Deck Longitudinal
S602	6	26'-0"	Deck End Stage 1
S603	6	25'-5"	Deck End Stage 2
Abutment 1 (Low Carbon Chromium)			
A500c	5	20'-10"	Left WW Curb
A501c	5	22'-1"	Right WW Curb
Abutment 1 (Plain Steel)			
A500	3	25'-11"	Backwall Stage 1
A501	3	26'-9"	Backwall Stage 1
A502	4	6'-6"	Backwall Stage 1
A503	4	7'-7"	Backwall Stage 1
A504	8	4'-10"	Backwall Stage 1 & 2
A505	3	25'-3"	Backwall Stage 2
A506	3	24'-5"	Backwall Stage 2
A507	3	6'-6"	Backwall Stage 2
A508	3	5'-5"	Backwall Stage 2
A509	6	3'-8"	Backwall Stage 1 & 2
A600	2	20'-5"	Left WW
A601	2	20'-9"	Left WW
A602	7	3'-6"	Left WW
A603	7	4'-4"	Left WW
A604	16	3'-11"	Right & Left WW
A605	2	22'-1"	Right WW
A606	2	20'-9"	Right WW
A607	7	5'-1"	Right WW
A608	7	4'-4"	Right WW
Abutment 2 (Low Carbon Chromium)			
B500c	10	19'-6"	Right & Left WW Curbs
Abutment 2 (Plain Steel)			
B500	2	25'-1"	Backwall Stage 1
B501	2	25'-11"	Backwall Stage 1
B502	3	4'-10"	Backwall Stage 1
B503	3	5'-8"	Backwall Stage 1
B504	15	3'-10"	Backwall Stage 1 & 2
B505	2	24'-5"	Backwall Stage 2
B506	2	25'-3"	Backwall Stage 2
B507	3	11'-0"	Backwall Stage 2
B508	3	12'-1"	Backwall Stage 2
B509	6	3'-8"	Backwall Stage 1 & 2
B600	8	19'-6"	Right & Left WW
B601	26	4'-4"	Right & Left WW
B602	8	4'-1"	Left WW
B603	8	3'-8"	Right WW

BENT BARS

MARK	QTY.	LENGTH	TYPE	A	B	C	D	E	F	G	H	O	R	LOCATION
Superstructure (Low-Carbon Chromium)														
S550c	378	5'-9"	SC	10"	1'-5"	1'-3"	1'-5"			10"		1'-4"		Curb Stirrup
Superstructure (Plain Steel)														
S550	550	6'-6"	J	5'-11"	7"						5"			Deck Overhang
S551	46	4'-5"	L	3'-9"	8"									Deck End
S552	46	4'-10"	SJ	2'-0"	9"	1'-3"	10"	0"						Deck End
S553	46	5'-10"	L	5'-4"	6"									Deck End
S554	46	6'-9"	SJ	2'-0"	8"	3'-7"	6"	0"						Deck End
S555	12	4'-8"	V				2'-4"	2'-4"			1'-1 1/2"			Deck Construction Joint
S650	3	25'-8"	V				24'-2"	1'-6"	8 1/2"					Deck End Stage 1
S651	3	25'-2"	V				23'-8"	1'-6"	8 1/2"					Deck End Stage 2
Abutment 1 (Low-Carbon Chromium)														
A550c	56	4'-6"	HB	4"	8"	1'-3"	8"	1'-3"		4"				WW Curb Stirrup
A551c	112	3'-3"	L	2'-5"	10"									WW Curb
A552c	5	10'-9 1/2"	SJ	3'-9"	3 1/2"	8"	1'-3"	4'-10"						Left WW Stirrup
A553c	5	10'-1/2"	SJ	3'-5"	3 1/2"	8"	1'-3"	4'-5"						Right WW Stirrup
Abutment 1 (Plain Steel)														
A550	36	3'-3"	L	2'-3"	1'-0"									Backwall Stage 1
A551	9	8'-6"	U		3'-8"	1'-2"	3'-8"							Backwall Stage 1 & 2
A552	10	3'-10"	V				2'-4"	1'-6"			1'-1"			Backwall Stage 1 & 2
A553	10	5'-3"	L	4'-5"	10"									Backwall Stage 1 & 2
A554	42	3'-4"	L	2'-4"	1'-0"									Backwall Stage 2
A555	5	4'-11"	V				2'-3"	2'-8"	2'-4"					Backwall Stage 1
A556	5	5'-4"	A					2'-8"	2'-4"					Backwall Stage 2
A557	8	2'-10"	L	1'-4"	1'-6"									Pedestal
A558	2	3'-0"	L	1'-4"	1'-8"									Pedestal
A559	4	3'-4"	L	1'-4"	2'-0"									Pedestal
A560	1	4'-2"	L	1'-4"	2'-10"									Pedestal
A561	1	4'-4"	L	1'-4"	3'-0"									Pedestal
A562	1	4'-7"	L	1'-4"	3'-3"									Pedestal
A563	1	4'-10"	L	1'-4"	3'-6"									Pedestal
Abutment 2 (Low-Carbon Chromium)														
B550c	56	4'-6"	HB	4"	8"	1'-3"	8"	1'-3"		4"				WW Curb Stirrup
B551c	112	3'-3"	L	2'-5"	10"									WW Curb
B552c	3	10'-8 1/2"	SJ	3'-9"	3 1/2"	8"	1'-3"	4'-9"						Left WW Stirrup
B553c	3	9'-11 1/2"	SJ	3'-4"	3 1/2"	8"	1'-3"	4'-5"						Right WW Stirrup
Abutment 2 (Plain Steel)														
B550	38	2'-10"	L	1'-10"	1'-0"									Backwall Stage 1
B551	5	7'-0"	U		2'-11"	1'-2"	2'-11"							Backwall Stage 1
B552	14	3'-10"	V				2'-4"	1'-6"			1'-1"			Backwall Stage 1 & 2
B553	14	5'-4"	L	4'-6"	10"									Backwall Stage 1 & 2
B554	30	2'-10"	L	1'-10"	1'-0"									Backwall Stage 2
B555	10	6'-2"	U		2'-6"	1'-2"	2'-6"							Backwall Stage 2
B556	4	6'-2"	I6	0"	3'-0"	1'-2"	2'-0"				11"	1'-9"		Backwall Stage 1
B557	4	6'-4"	L	3'-2"	3'-2"									Backwall Stage 2

TYPE - BENDING DIAGRAMS

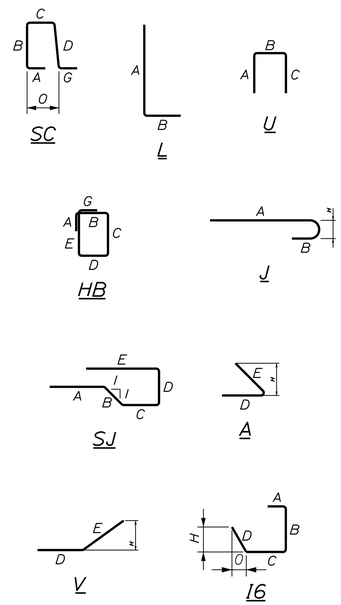

All dimensions are out-to-out of bar.

Bending details and hooks shall conform to the recommendations of the current revision of ACI Standard 315 and ACI Standard 318.

Plain Reinforcing Steel: ASTM A 615, Grade 60
Stainless Steel Reinforcing: ASTM A955, Grade 75
Glass Fiber Reinforced Polymer: ASTM D7957
Low-Carbon Chromium Steel: ASTM A1035, Type CS, Grade 100

GENERAL NOTES

1. The first digit(s) following the letter(s) of the mark indicate the size of the bar:

   Mark "A502" = bar size #5
   Mark "P805" = bar size #8
   Mark "S650" = bar size #6
   Mark "P1404" = bar size #14

2. All reinforcement bars shall be Plain Reinforcing Steel, except in the curbs. Curb reinforcement will be Low-Carbon Chromium Steel as denoted by the lower case letter "c" following the bar number.

   "P510c", c = Low-Carbon Chromium Steel

STATE OF MAINE
DEPARTMENT OF TRANSPORTATION

PROJECT NO. 2563106

WIN 25631.08

BRIDGE NO. 1449

BRIDGE PLANS

PROJ. MANAGER	J. BRASK	BY	DATE
DESIGN-DETAILED	S. LINDSLEY	E. MORRISON	06-24
CHECKED-REVIEWED	D. WHITE	B. COLBURN	06-24
DESIGN2-DETAILED2	N. EDMAN	J. FITZ	06-24
DESIGN3-DETAILED3			
REVISIONS 1			
REVISIONS 2			
REVISIONS 3			
REVISIONS 4			
FIELD CHANGES			

SIGNATURE

P.E. NUMBER

DATE

I-95 SB OVER WEBB RD
BRIDGE NO. 1449
PITTSFIELD SOMERSET COUNTY

REINFORCING STEEL SCHEDULE

SHEET NUMBER
75
OF 110

STRAIGHT BARS

MARK	QTY.	LENGTH	LOCATION
Approach Slabs (Plain Steel)			
AS501	15	4'-2"	AB 1 Stage 1 Transverse
AS502	15	19'-0"	AB 1 Stage 2 Transverse
AS503	15	16'-2"	AB 2 Stage 2 Transverse
AS504	15	18'-9"	AB 2 Stage 1 Transverse
AS601	109	14'-8"	Approach Slab Longitudinal
Superstructure (Low-Carbon Chromium)			
S500c	12	60'-0"	Curb Longitudinal
S501c	6	20'-10"	Curb Longitudinal
S600c	4	60'-0"	Curb Longitudinal
S601c	4	47'-5"	Curb Longitudinal
Superstructure (Plain Steel)			
S500	184	60'-0"	Deck Longitudinal
S501	92	20'-10"	Deck Longitudinal
S502	504	22'-8"	Deck Transverse Stage 1
S503	504	22'-4"	Deck Transverse Stage 2
S504	11	25'-3"	Deck End Stage 1
S505	11	25'-2"	Deck End Stage 2
S506	6	2'-0"	Deck End
S507	12	8'-5"	Deck End
S508	3	5'-3"	Deck End
S509	3	5'-2"	Deck End
S510A	4	21'-8"	Deck Transverse Stage 1
S510B	4	20'-8"	Deck Transverse Stage 1
S510C	4	19'-9"	Deck Transverse Stage 1
S510D	4	18'-9"	Deck Transverse Stage 1
S510E	4	17'-9"	Deck Transverse Stage 1
S510F	4	16'-10"	Deck Transverse Stage 1
S510G	4	15'-10"	Deck Transverse Stage 1
S510H	4	14'-10"	Deck Transverse Stage 1
S510J	4	13'-10"	Deck Transverse Stage 1
S510K	4	12'-11"	Deck Transverse Stage 1
S510L	4	11'-11"	Deck Transverse Stage 1
S510M	4	10'-11"	Deck Transverse Stage 1
S510N	4	10'-0"	Deck Transverse Stage 1
S510P	4	9'-0"	Deck Transverse Stage 1
S510Q	4	8'-0"	Deck Transverse Stage 1
S510R	4	7'-1"	Deck Transverse Stage 1
S510S	4	6'-1"	Deck Transverse Stage 1
S510T	2	5'-1"	Deck Transverse Stage 1
S510U	2	4'-1"	Deck Transverse Stage 1
S511A	2	21'-4"	Deck Transverse Stage 2
S511B	2	20'-5"	Deck Transverse Stage 2
S511C	2	19'-5"	Deck Transverse Stage 2
S511D	2	18'-5"	Deck Transverse Stage 2
S511E	2	17'-5"	Deck Transverse Stage 2
S511F	2	16'-6"	Deck Transverse Stage 2
S511G	2	15'-6"	Deck Transverse Stage 2
S511H	2	14'-6"	Deck Transverse Stage 2
S511J	2	13'-7"	Deck Transverse Stage 2
S511K	2	12'-7"	Deck Transverse Stage 2
S511L	2	11'-7"	Deck Transverse Stage 2
S511M	2	10'-8"	Deck Transverse Stage 2
S511N	2	9'-8"	Deck Transverse Stage 2
S511P	2	8'-8"	Deck Transverse Stage 2
S511Q	2	7'-8"	Deck Transverse Stage 2
S511R	2	6'-9"	Deck Transverse Stage 2
S511S	2	5'-9"	Deck Transverse Stage 2
S511T	2	4'-9"	Deck Transverse Stage 2
S511U	2	3'-10"	Deck Transverse Stage 2
S511V	2	2'-10"	Deck Transverse Stage 2
S512A	2	19'-9"	Deck Transverse Stage 2
S512B	2	18'-9"	Deck Transverse Stage 2
S512C	2	17'-10"	Deck Transverse Stage 2
S512D	2	16'-10"	Deck Transverse Stage 2
S512E	2	15'-10"	Deck Transverse Stage 2
S512F	2	14'-11"	Deck Transverse Stage 2
S512G	2	13'-11"	Deck Transverse Stage 2
S512H	2	12'-11"	Deck Transverse Stage 2

MARK	QTY.	LENGTH	LOCATION
Superstructure (Plain Steel)			
S512J	2	11'-11"	Deck Transverse Stage 2
S512K	2	11'-0"	Deck Transverse Stage 2
S512L	2	10'-0"	Deck Transverse Stage 2
S512M	2	9'-0"	Deck Transverse Stage 2
S512N	2	8'-1"	Deck Transverse Stage 2
S512P	2	7'-1"	Deck Transverse Stage 2
S512Q	2	6'-1"	Deck Transverse Stage 2
S512R	2	5'-2"	Deck Transverse Stage 2
S512S	2	4'-2"	Deck Transverse Stage 2
S512T	2	3'-2"	Deck Transverse Stage 2
S600	46	60'-0"	Deck Longitudinal
S601	46	47'-5"	Deck Longitudinal
S602	6	25'-8"	Deck End Stage 1
S603	6	25'-1"	Deck End Stage 2
Abutment 1 (Low Carbon Chromium)			
A500c	5	22'-0"	Right WW Curb
A501c	5	20'-11"	Left WW Curb
Abutment 1 (Plain Steel)			
A500	3	26'-8"	Backwall Stage 1
A501	3	25'-11"	Backwall Stage 1
A502	3	6'-8"	Backwall Stage 1
A503	3	5'-5"	Backwall Stage 1
A504	21	3'-8"	Backwall Stage 1 & 2
A505	3	24'-4"	Backwall Stage 2
A506	3	25'-2"	Backwall Stage 2
A507	3	19'-10"	Backwall Stage 2
A508	3	20'-10"	Backwall Stage 2
A509	6	3'-8"	Backwall Stage 1 & 2
A600	2	21'-11"	Right WW
A601	2	21'-1"	Right WW
A602	6	5'-1"	Right WW
A603	6	4'-4"	Right WW
A604	15	4'-1"	Right & Left WW
A605	2	20'-4"	Left WW
A606	2	20'-11"	Left WW
A607	7	3'-7"	Left WW
A608	7	4'-4"	Left WW
Abutment 2 (Low Carbon Chromium)			
B500c	10	19'-4"	WW Curb
Abutment 2 (Plain Steel)			
B500	3	25'-8"	Backwall Stage 1
B501	3	26'-5"	Backwall Stage 1
B502	2	19'-7"	Backwall Stage 1
B503	2	20'-8"	Backwall Stage 1
B504	35	3'-3"	Backwall Stage 1 & 2
B505	3	23'-3"	Backwall Stage 2
B506	3	24'-2"	Backwall Stage 2
B507	2	16'-10"	Backwall Stage 2
B508	2	17'-6"	Backwall Stage 2
B509	6	3'-8"	Backwall Stage 1 & 2
B600	8	19'-4"	Right & Left WW
B601	22	4'-4"	Right & Left WW
B602	8	3'-1"	Right WW
B603	8	3'-7"	Left WW

BENT BARS

MARK	QTY.	LENGTH	TYPE	A	B	C	D	E	F	G	H	O	R	LOCATION
Superstructure (Low-Carbon Chromium)														
S550c	378	5'-9"	SC	10"	1'-5"	1'-3"	1'-5"			10"		1'-4"		Curb Stirrup
Superstructure (Plain Steel)														
S550	550	6'-6"	J	5'-11"	7"						5"			Deck Overhang
S551	46	4'-5"	L	3'-9"	8"									Deck End
S552	46	4'-10"	SJ	2'-0"	9"	1'-3"	10"	0"						Deck End
S553	46	5'-10"	L	5'-4"	6"									Deck End
S554	46	6'-9"	SJ	2'-0"	8"	3'-7"	6"	0"						Deck End
S555	12	4'-8"	V				2'-4"	2'-4"			1'-1"			Deck Construction Joint
S650	3	25'-6"	V				24'-0"	1'-6"	8"					Deck End Stage 1
S651	3	24'-8"	V				23'-2"	1'-6"	8"					Deck End Stage 2
Abutment 1 (Low-Carbon Chromium)														
A550c	56	4'-6"	HB	4"	8"	1'-3"	8"	1'-3"		4"				WW Curb Stirrup
A551c	112	3'-3"	L	2'-5"	10"									WW Curb
A552c	9	9'-11 1/2"	SJ	3'-5"	3 1/2"	8"	1'-3"	4'-4"						WW Stirrup
Abutment 1 (Plain Steel)														
A550	8	3'-4"	L	2'-4"	1'-0"									Backwall Stage 1
A551	8	3'-5"	L	2'-5"	1'-0"									Backwall Stage 1
A552	8	3'-6"	L	2'-6"	1'-0"									Backwall Stage 1
A553	8	3'-7"	L	2'-7"	1'-0"									Backwall Stage 1
A554	6	3'-8"	L	2'-8"	1'-0"									Backwall Stage 1
A555	27	8'-4"	U		3'-7"	1'-2"	3'-7"							Backwall Stage 1 & 2
A556	22	3'-6"	V				2'-0"	1'-6"			1'-1"			Backwall Stage 1 & 2
A557	22	5'-10"	L	5'-0"	10"									Backwall Stage 1 & 2
A558	14	3'-9"	L	2'-9"	1'-0"									Backwall Stage 2
A559	5	5'-4"	A				2'-8"	2'-8"			2'-4"			Backwall Stage 1
A560	5	4'-11"	V				2'-3"	2'-8"			2'-4"			Backwall Stage 2
Abutment 2 (Low-Carbon Chromium)														
B550c	56	4'-6"	HB	4"	8"	1'-3"	8"	1'-3"		4"				WW Curb Stirrup
B551c	112	3'-3"	L	2'-5"	10"									WW Curb
B552c	6	9'-1/2"	SJ	3'-0"	3 1/2"	8"	1'-3"	3'-10"						WW Stirrup
Abutment 2 (Plain Steel)														
B550	10	3'-3"	L	2'-3"	1'-0"									Backwall Stage 1
B551	4	5'-2"	U	2'-0"	1'-2"	2'-0"								Backwall Stage 1
B552	4	5'-4"	U	2'-1"	1'-2"	2'-1"								Backwall Stage 1
B553	4	5'-6"	U	2'-2"	1'-2"	2'-2"								Backwall Stage 1
B554	3	5'-8"	U	2'-3"	1'-2"	2'-3"								Backwall Stage 1
B555	3	5'-10"	U	2'-4"	1'-2"	2'-4"								Backwall Stage 1
B556	35	3'-6"	V				2'-0"	1'-6"			1'-1"			Backwall Stage 1 & 2
B557	35	4'-10"	L	4'-0"	10"									Backwall Stage 1 & 2
B558	16	3'-4"	L	2'-4"	1'-0"									Backwall Stage 2
B559	17	6'-2"	U		2'-6"	1'-2"	2'-6"							Backwall Stage 2
B560	3	6'-4"	L	3'-2"	3'-2"									Backwall Stage 1
B561	4	6'-2"	I6	0"	3'-0"	1'-2"	2'-0"				11"	1'-9"		Backwall Stage 2

TYPE - BENDING DIAGRAMS

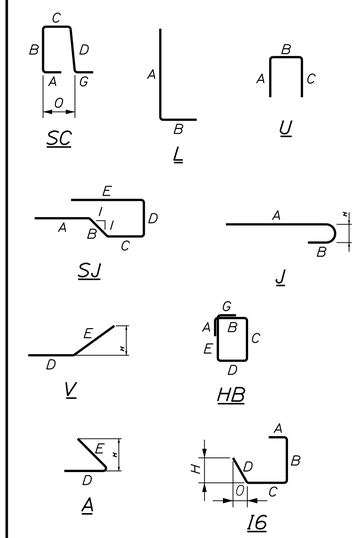

All dimensions are out-to-out of bar.

Bending details and hooks shall conform to the recommendations of the current revision of ACI Standard 315 and ACI Standard 318.

Plain Reinforcing Steel: ASTM A 615, Grade 60
Stainless Steel Reinforcing: ASTM A955, Grade 75
Glass Fiber Reinforced Polymer: ASTM D7957
Low-Carbon Chromium Steel: ASTM A1035, Type CS, Grade 100

GENERAL NOTES

1. The first digit(s) following the letter(s) of the mark indicate the size of the bar:

   Mark "A502" = bar size #5
   Mark "P805" = bar size #8
   Mark "S650" = bar size #6
   Mark "P1404" = bar size #14

2. All reinforcement bars shall be Plain Reinforcing Steel, except in the curbs. Curb reinforcement will be Low-Carbon Chromium Steel as denoted by the lower case letter "c" following the bar number.

   "P510c", c = Low-Carbon Chromium Steel

STATE OF MAINE
DEPARTMENT OF TRANSPORTATION

PROJECT NO. 2563106

WIN 25631.09

BRIDGE PLANS

BRIDGE NO. 5984

		BY	DATE
PROJ. MANAGER	J. BRASK		
DESIGN-DETAILED	S. LINDSLEY	E. MORRISON	06-24
CHECKED-REVIEWED	D. WHITE	B. COLBURN	06-24
DESIGN2-DETAILED2	N. EDMAN	J. FITZ	06-24
DESIGN3-DETAILED3			
REVISIONS 1			
REVISIONS 2			
REVISIONS 3			
REVISIONS 4			
FIELD CHANGES			

SIGNATURE

P.E. NUMBER

DATE

I-95 NB OVER WEBB RD
BRIDGE NO. 5984
PITTSFIELD SOMERSET COUNTY

REINFORCING STEEL SCHEDULE

SHEET NUMBER
76
OF 110

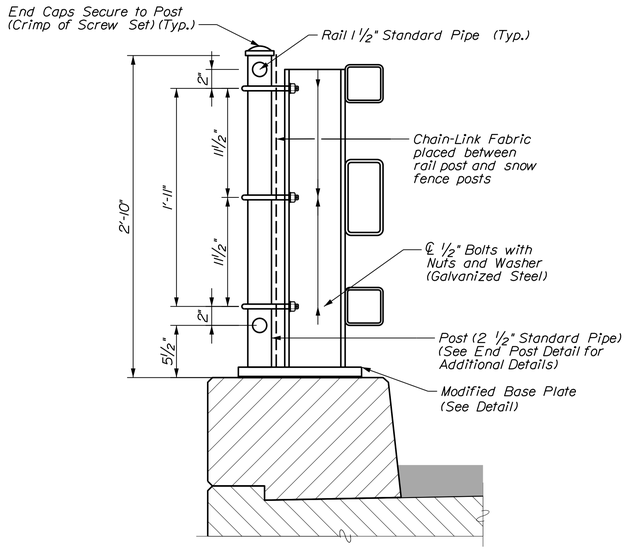

SNOW FENCE CONNECTION DETAIL

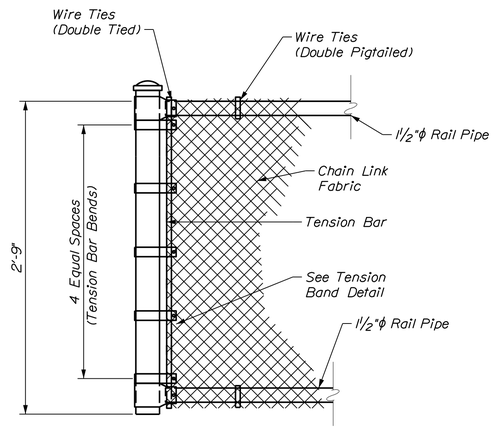

END POST DETAIL

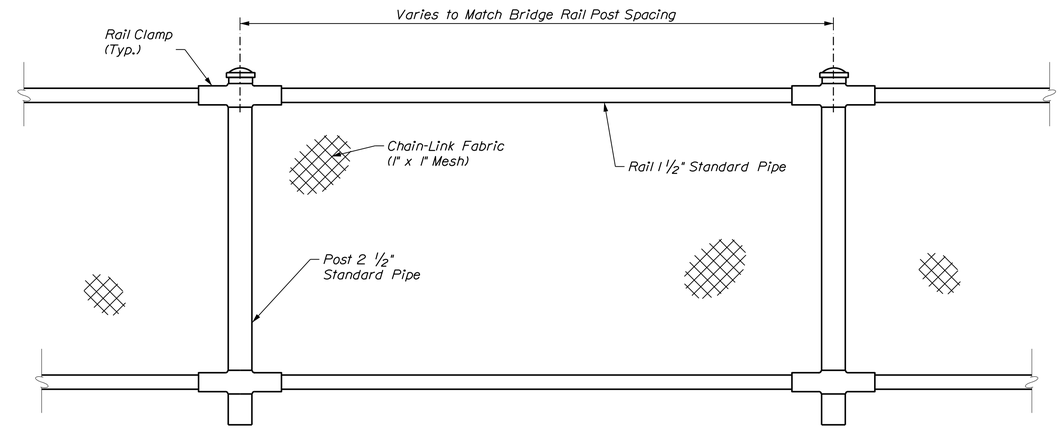

ELEVATION - SNOW FENCE

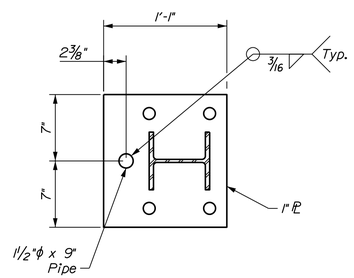

MODIFIED BASE PLATE DETAIL

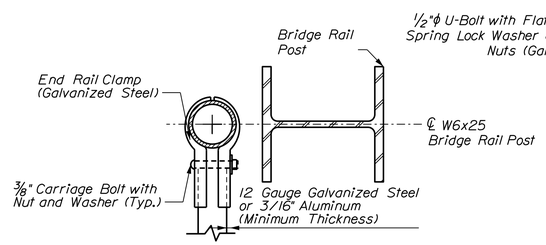

END POST SECTION

(U-Bolt Not Shown)

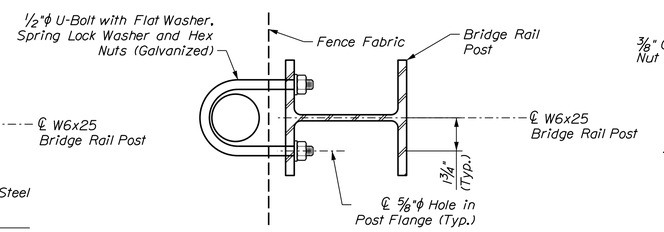

U-BOLT CONNECTION DETAIL

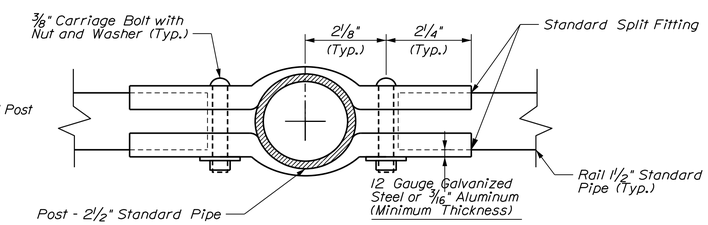

RAIL CLAMP DETAIL

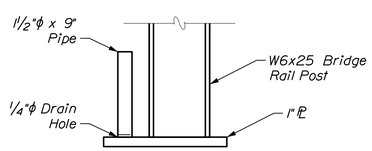

MODIFIED BASE PLATE ELEVATION

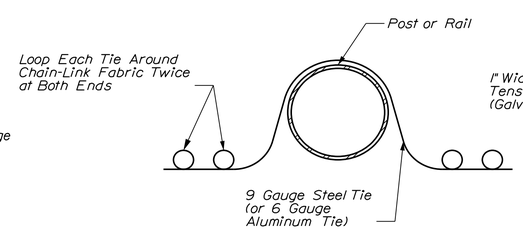

DOUBLE PIGTAILED TIE

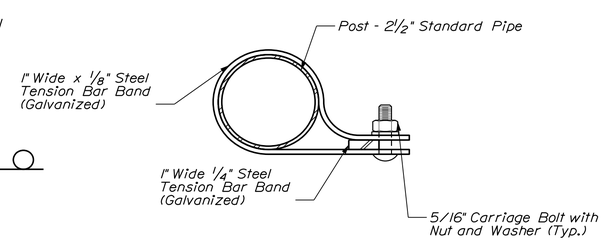

TENSION BAND DETAIL

SNOW FENCE NOTES

1. Chain-Link fence shall conform to Section 710.03 and Special Provision Section 607. The size of wire mesh (fabric) shall be 1".
2. Post and rail pipe shall be hot-dip galvanized. All pipe shall be schedule 40, standard weight. Nominal pipe sizes are shown.
3. Tension bars, bar bands, boulevard and end rail clamps shall be steel or aluminum alloy conforming to AASHTO M181 (ASTM F626). Steel components shall be hot-dip galvanized in accordance with AASHTO M111 (ASTM A123) or AASHTO M232 (ASTM A153) as applicable.
4. All bolts and nuts shall be steel conforming to ASTM A307 and ASTM A563 grade A respectively. Washers shall be hardened steel commercial type A plain and shall meet the dimensional requirements of ANSI B18.22. All bolts, nuts, and washers shall be hot-dip galvanized in accordance with AASHTO M111 (ASTM A123) or AASHTO M232 (ASTM A153) as applicable.
5. Rail may be field cut (sawn) to fit post spacing. Repair galvanizing on cut edges in accordance with ASTM A780.
6. Payment for modified base plate will be considered incidental to related contract items.

STATE OF MAINE
DEPARTMENT OF TRANSPORTATION

PROJECT NO.
25631.06

WIN 25631.06, 25631.07, 25631.08, 25631.09
BRIDGE NO. 1447, 5985, 1449, 5984

BRIDGE PLANS

PROJ. MANAGER	J. BRASK	BY	DATE
DESIGN-DETAILED	S. LINDSLEY	E. MORRISON	06-24
CHECKED-REVIEWED	D. WHITE	B. COLBURN	06-24
DESIGN2-DETAILED2	N. EDMAN	J. FITZ	06-24
DESIGN3-DETAILED3			
REVISIONS 1			
REVISIONS 2			
REVISIONS 3			
REVISIONS 4			
FIELD CHANGES			

SIGNATURE

P.E. NUMBER

DATE

INTERSTATE 95 OVER SB & NB
OVER SOMERSET AVE AND WEBB RD
PITTSFIELD SOMERSET COUNTY

SNOW FENCE DETAILS

SHEET NUMBER
77
OF 110

Filename: ...\0xx_Snow Fence Details.dgn Division: Username: jfitzpatrick Date:6/10/2024

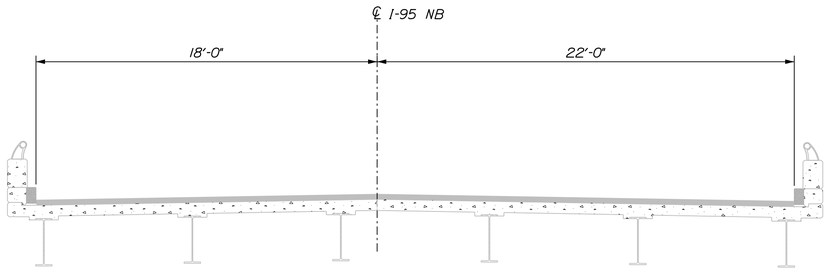

EXISTING TRANSVERSE SECTION

I-95 Northbound shown.
I-95 Southbound opposite hand.

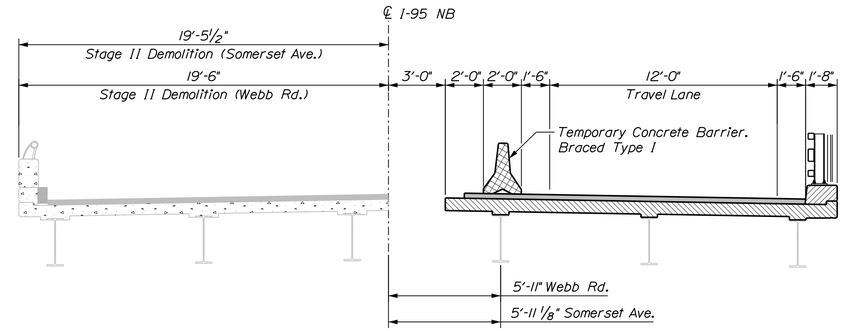

STAGE II DEMOLITION

I-95 Northbound shown.
I-95 Southbound opposite hand.

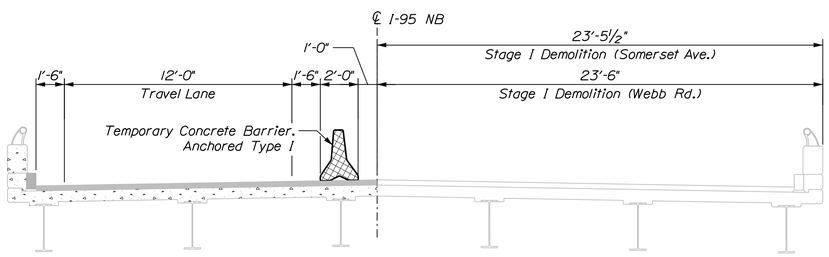

STAGE I DEMOLITION

I-95 Northbound shown.
I-95 Southbound opposite hand.

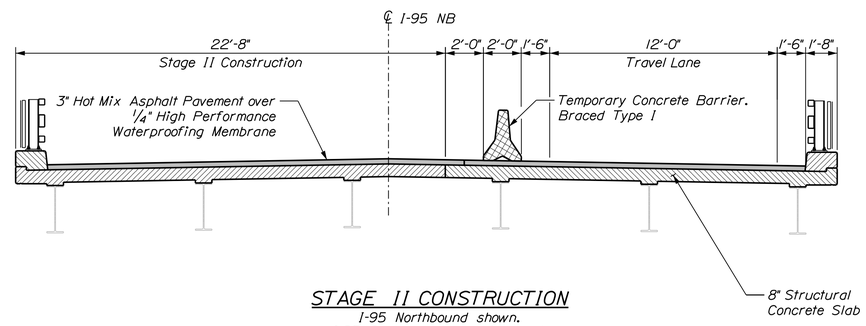

STAGE II CONSTRUCTION

I-95 Northbound shown.
I-95 Southbound opposite hand.

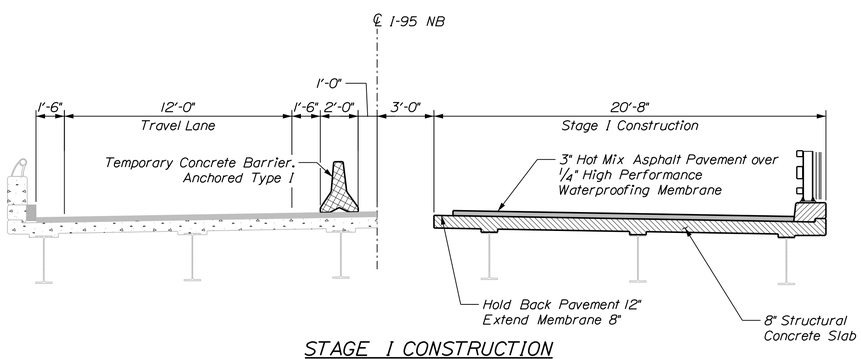

STAGE I CONSTRUCTION

I-95 Northbound shown.
I-95 Southbound opposite hand.

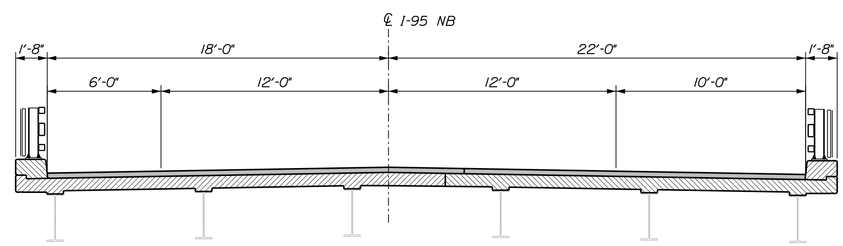

PROPOSED TRANSVERSE SECTION

I-95 Northbound shown.
I-95 Southbound opposite hand.

STATE OF MAINE
DEPARTMENT OF TRANSPORTATION

PROJECT NO. 2563106

WIN 25631.06, 25631.07, 25631.08, 25631.09
BRIDGE NO. 1447, 5985, 1449, 5984

BRIDGE PLANS

PROJ. MANAGER	J. BRASK	BY	DATE
DESIGN-DETAILED	S. LINDSLEY	E. MORRISON	06-24
CHECKED-REVIEWED	D. WHITE	B. COLBURN	06-24
DESIGN2-DETAILED2	N. EDMAN	J. FITZ	06-24
DESIGN3-DETAILED3			
REVISIONS 1			
REVISIONS 2			
REVISIONS 3			
REVISIONS 4			
FIELD CHANGES			

SIGNATURE

P.E. NUMBER

DATE

INTERSTATE 95 SB & NB
OVER SOMERSET AVE AND WEBB RD
PITTSFIELD SOMERSET COUNTY

STAGED CONSTRUCTION SECTIONS

SHEET NUMBER

78

OF 110

Filename: ...\0xx_Pittsfield_Phased_Typicals.dgn Division: Username: jfitzpatrick Date:6/10/2024

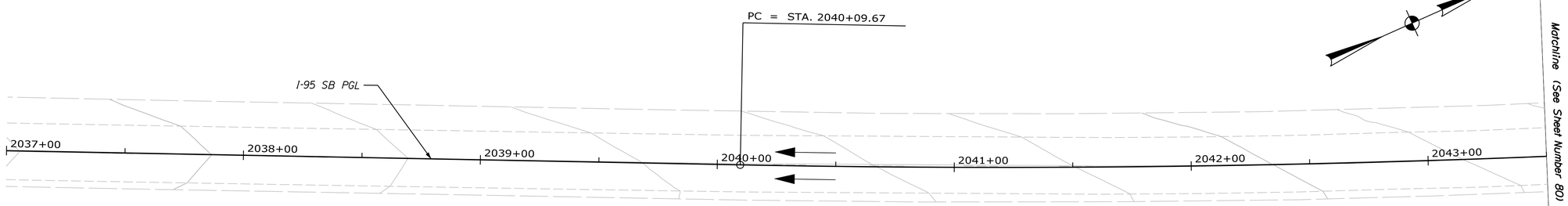

NOTE

1. Traffic Control Plans currently show all bridges being worked on concurrently. If bridges are worked on individually, lane closures will only be allowed on active work zones and shall be minimized as much as possible.

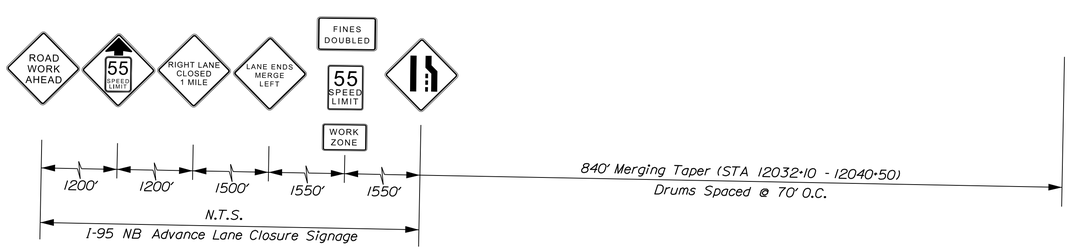

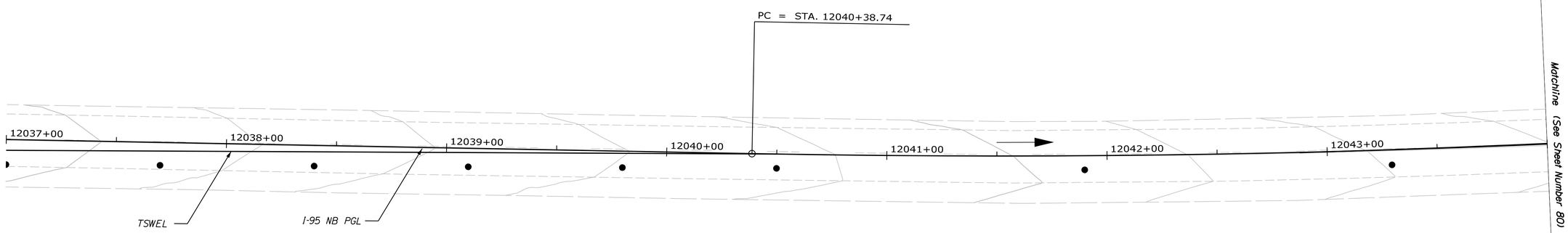

PLAN

25 0 25 50
Scale of Feet

STATE OF MAINE
DEPARTMENT OF TRANSPORTATION

PROJECT NO. 2563106

WIN 25631.06, 25631.07, 25631.08, 25631.09
BRIDGE NO. 1447, 1449, 5984, 5985
BRIDGE PLANS

PROJ. MANAGER	J. BRASK	BY	DATE
DESIGN-DETAILED	S. LINDSLEY	E. MORRISON	06-24
CHECKED-REVIEWED	D. WHITE	B. COLBURN	06-24
DESIGN2-DETAILED2	N. EDMAN	J. FITZ	06-24
DESIGN3-DETAILED3			
REVISIONS 1			
REVISIONS 2			
REVISIONS 3			
REVISIONS 4			
FIELD CHANGES			

SIGNATURE

P.E. NUMBER

DATE

I-95 SB & NB OVER WEBB RD & SOMERSET AVE
BRIDGE NO. 1447, 1449, 5984, 5985
PITTSFIELD SOMERSET COUNTY

TRAFFIC CONTROL PLANS
PHASE 1

SHEET NUMBER
79
OF 110

Filename: ...\Sheet Files\0XX_TCPlan_SB1.dgn Division: Username: jfitzpatrick Date:6/10/2024

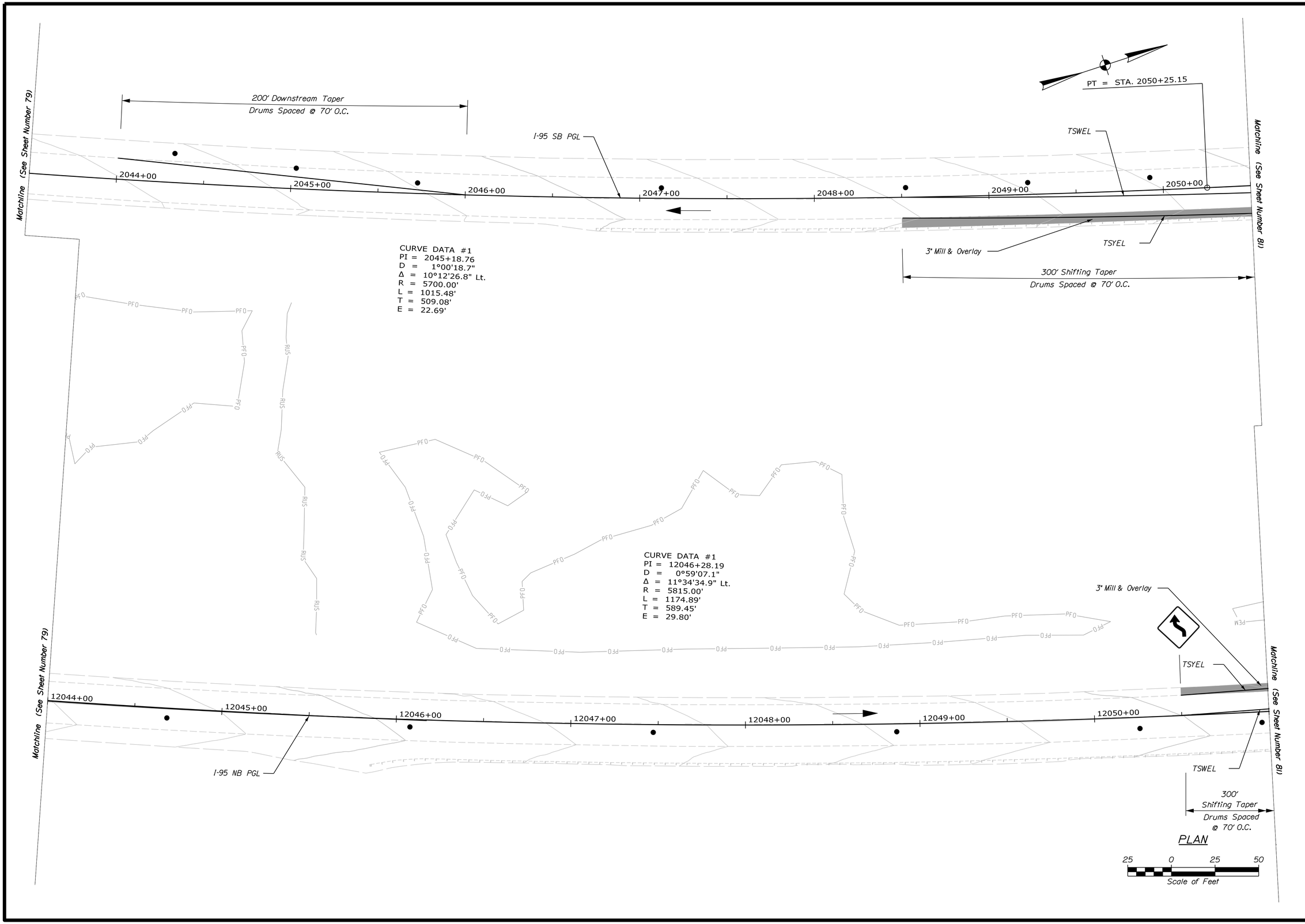

STATE OF MAINE
DEPARTMENT OF TRANSPORTATION

PROJECT NO. 2563106

WIN 25631.06, 25631.07, 25631.08, 25631.09
BRIDGE NO. 1447, 1449, 5984, 5985
BRIDGE PLANS

PROJ. MANAGER	J. BRASK	BY	DATE
DESIGN-DETAILED	S. LINDSLEY	E. MORRISON	06-24
CHECKED-REVIEWED	D. WHITE	B. COLBURN	06-24
DESIGN2-DETAILED2	N. EDMAN	J. FITZ	06-24
DESIGN3-DETAILED3			
REVISIONS 1			
REVISIONS 2			
REVISIONS 3			
REVISIONS 4			
FIELD CHANGES			

SIGNATURE

P.E. NUMBER

DATE

I-95 SB & NB OVER WEBB RD & SOMERSET AVE
BRIDGE NO. 1447, 1449, 5984, 5985
PITTSFIELD SOMERSET COUNTY

TRAFFIC CONTROL PLANS
PHASE 1

SHEET NUMBER
80
OF 110

Filename: ...\Sheet Files\OXX_TCPlan_SB2.dgn Division: Username: jfitzpatrick Date:6/10/2024

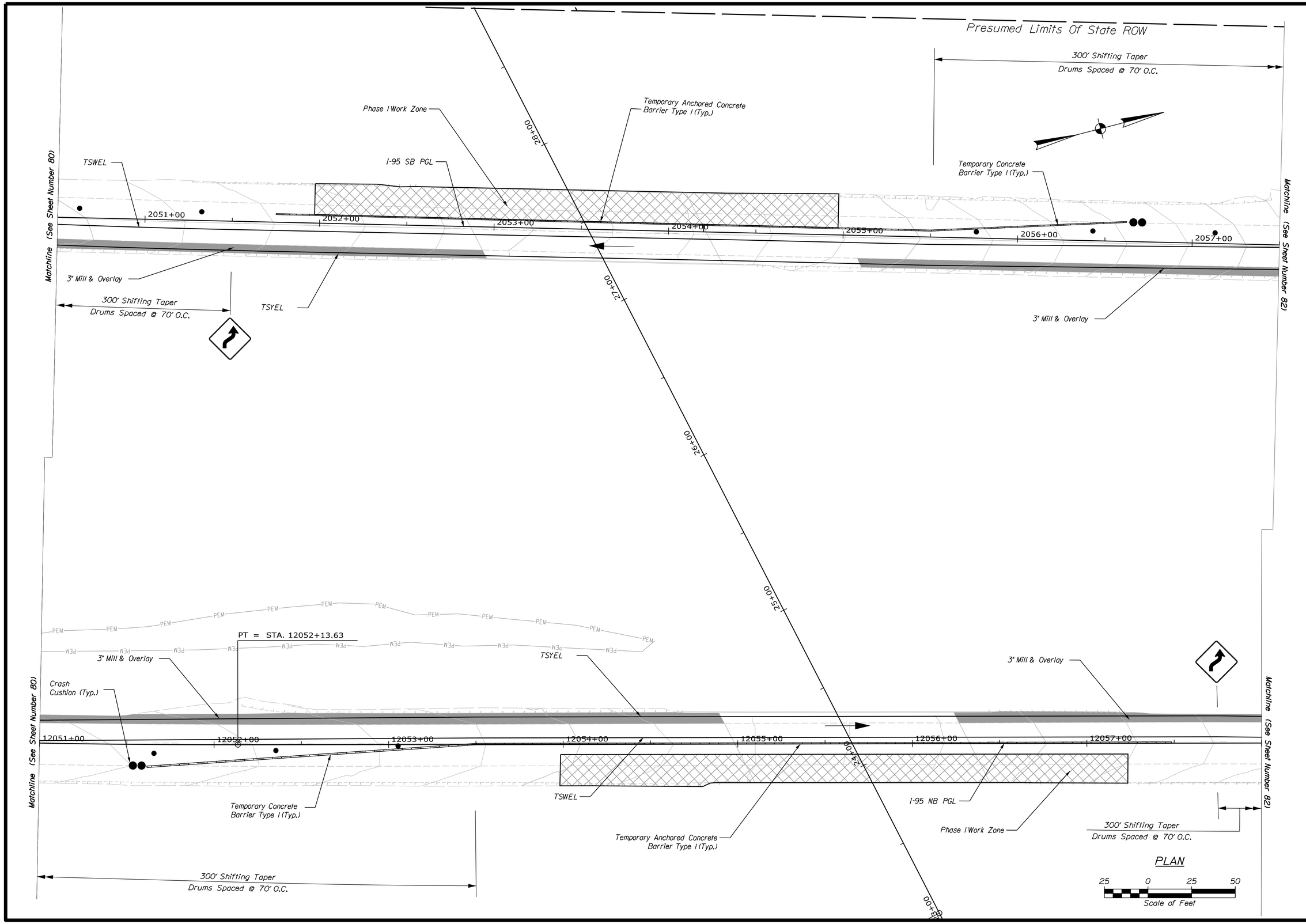

STATE OF MAINE
DEPARTMENT OF TRANSPORTATION

PROJECT NO. 2563106

WIN 25631.06, 25631.07, 25631.08, 25631.09
BRIDGE NO. 1447, 1449, 5984, 5985

BRIDGE PLANS

PROJ. MANAGER	J. BRASK	BY	DATE
DESIGN-DETAILED	S. LINDSLEY	E. MORRISON	06-24
CHECKED-REVIEWED	D. WHITE	B. COLBURN	06-24
DESIGN2-DETAILED2	N. EDMAN	J. FITZ	06-24
DESIGN3-DETAILED3			
REVISIONS 1			
REVISIONS 2			
REVISIONS 3			
REVISIONS 4			
FIELD CHANGES			

SIGNATURE

P.E. NUMBER

DATE

I-95 SB & NB OVER WEBB RD & SOMERSET AVE
BRIDGE NO. 1447, 1449, 5984, 5985
PITTSFIELD SOMERSET COUNTY

TRAFFIC CONTROL PLANS
PHASE 1

SHEET NUMBER
81
OF 110

Filename: ...\Sheet Files\0XX_TCPlan_SB3.dgn Division: Username: jfitzpatrick Date:6/10/2024

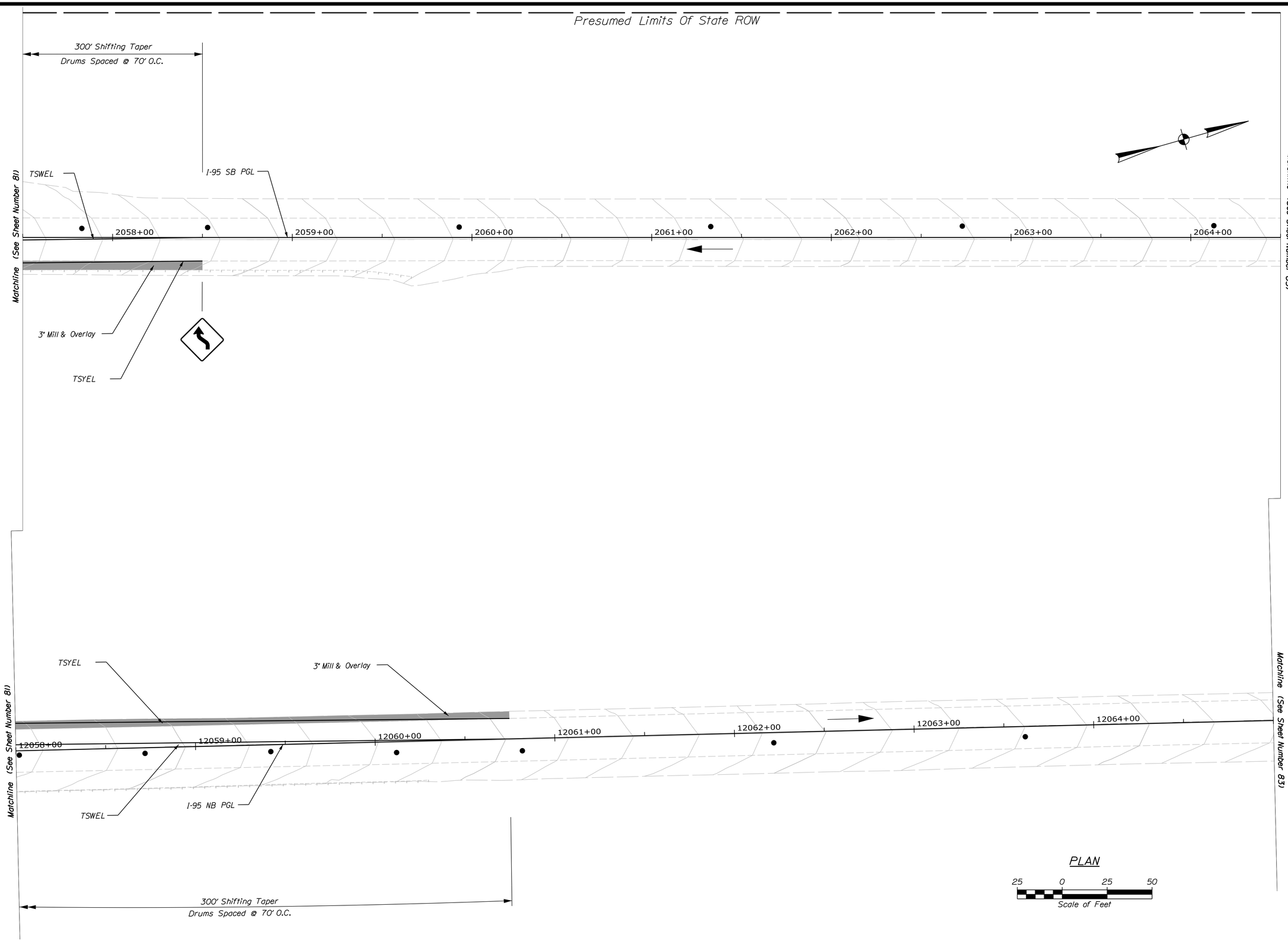

STATE OF MAINE
DEPARTMENT OF TRANSPORTATION

PROJECT NO. 2563106

WIN 25631.06, 25631.07, 25631.08, 25631.09
BRIDGE NO. 1447, 1449, 5984, 5985

BRIDGE PLANS

PROJ. MANAGER	J. BRASK	BY	DATE
DESIGN-DETAILED	S. LINDSLEY	E. MORRISON	06-24
CHECKED-REVIEWED	D. WHITE	B. COLBURN	06-24
DESIGN2-DETAILED2	N. EDMAN	J. FITZ	06-24
DESIGN3-DETAILED3			
REVISIONS 1			
REVISIONS 2			
REVISIONS 3			
REVISIONS 4			
FIELD CHANGES			

SIGNATURE

P.E. NUMBER

DATE

I-95 SB & NB OVER WEBB RD & SOMERSET AVE
BRIDGE NO. 1447, 1449, 5984, 5985
PITTSFIELD SOMERSET COUNTY

TRAFFIC CONTROL PLANS
PHASE 1

SHEET NUMBER
82
OF 110

Filename: ...\Sheet Files\0XX_TCPlan_SB4.dgn Division: Username: jfitzpatrick Date:6/10/2024

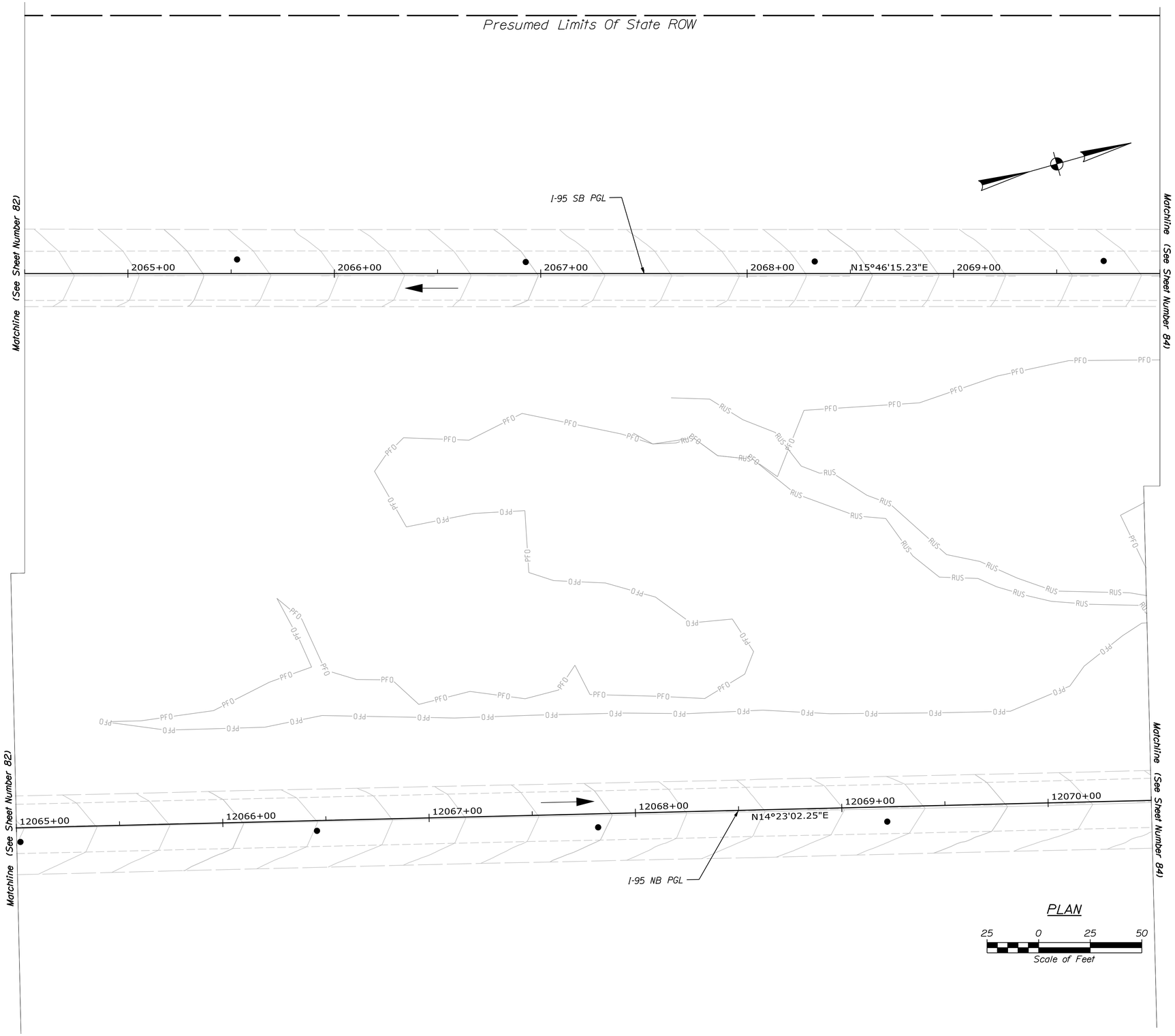

STATE OF MAINE
DEPARTMENT OF TRANSPORTATION

PROJECT NO. 2563106

WIN 25631.06, 25631.07, 25631.08, 25631.09
BRIDGE NO. 1447, 1449, 5984, 5985

BRIDGE PLANS

PROJ. MANAGER	J. BRASK	BY	DATE
DESIGN-DETAILED	S. LINDSLEY	E. MORRISON	06-24
CHECKED-REVIEWED	D. WHITE	B. COLBURN	06-24
DESIGN2-DETAILED2	N. EDMAN	J. FITZ	06-24
DESIGN3-DETAILED3			
REVISIONS 1			
REVISIONS 2			
REVISIONS 3			
REVISIONS 4			
FIELD CHANGES			

SIGNATURE

P.E. NUMBER

DATE

I-95 SB & NB OVER WEBB RD & SOMERSET AVE
BRIDGE NO. 1447, 1449, 5984, 5985
PITTSFIELD SOMERSET COUNTY

TRAFFIC CONTROL PLANS
PHASE 1

SHEET NUMBER
83
OF 110

Filename: ...\Sheet Files\0XX_TCPlan_SB5.dgn Division: Username: jfitzpatrick Date:6/10/2024

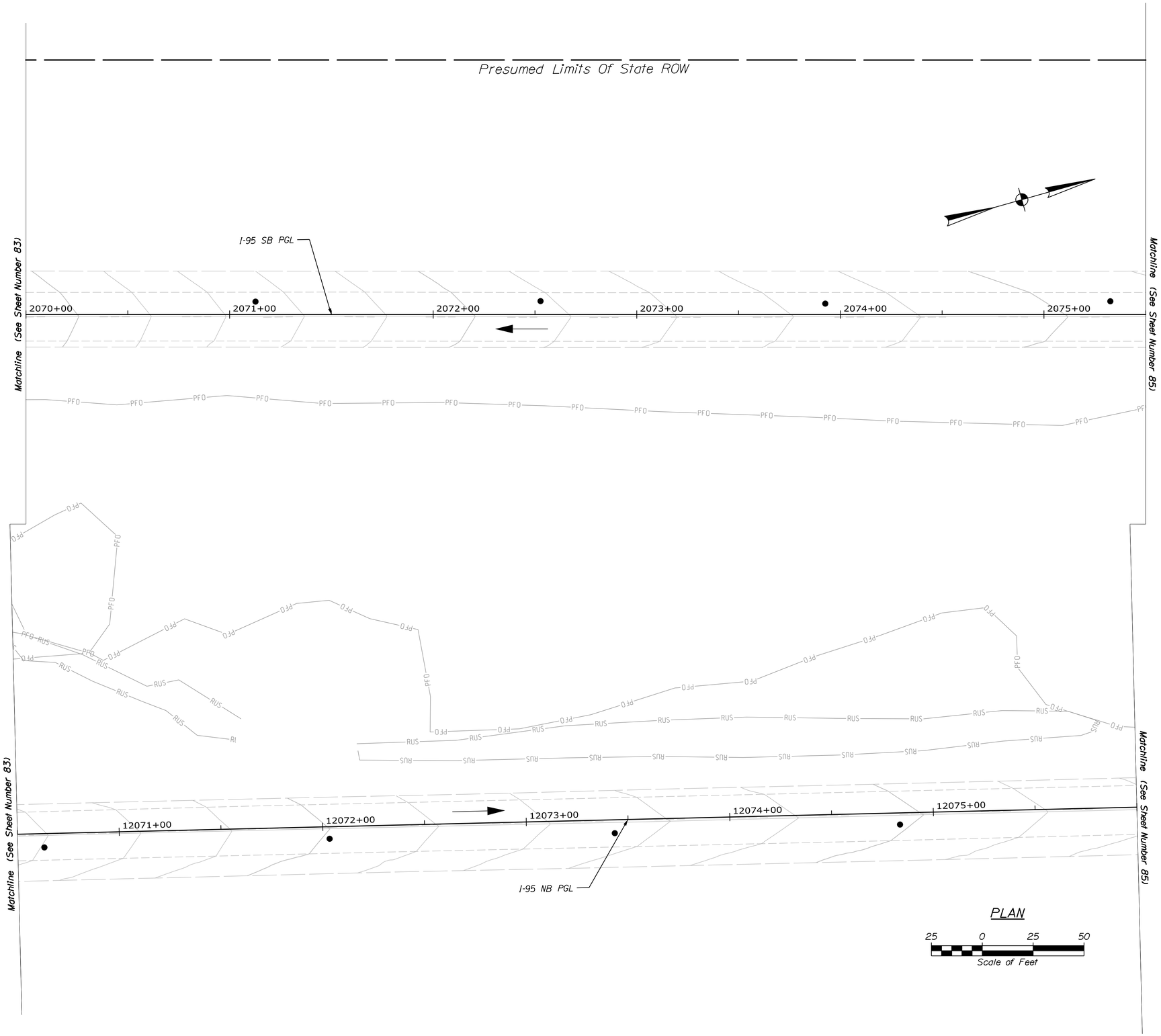

STATE OF MAINE
DEPARTMENT OF TRANSPORTATION

PROJECT NO. 2563106

WIN 25631.06, 25631.07, 25631.08, 25631.09
BRIDGE NO. 1447, 1449, 5984, 5985

BRIDGE PLANS

PROJ. MANAGER	J. BRASK	BY	DATE
DESIGN-DETAILED	S. LINDSLEY	E. MORRISON	06-24
CHECKED-REVIEWED	D. WHITE	B. COLBURN	06-24
DESIGN2-DETAILED2	N. EDMAN	J. FITZ	06-24
DESIGN3-DETAILED3			
REVISIONS 1			
REVISIONS 2			
REVISIONS 3			
REVISIONS 4			
FIELD CHANGES			

SIGNATURE

P.E. NUMBER

DATE

I-95 SB & NB OVER WEBB RD & SOMERSET AVE
BRIDGE NO. 1447, 1449, 5984, 5985
PITTSFIELD SOMERSET COUNTY

TRAFFIC CONTROL PLANS
PHASE 1

SHEET NUMBER

84

OF 110

Filename: ...\Sheet Files\0XX_TCPlan_SB6.dgn Division: Username: jfitzpatrick Date:6/10/2024

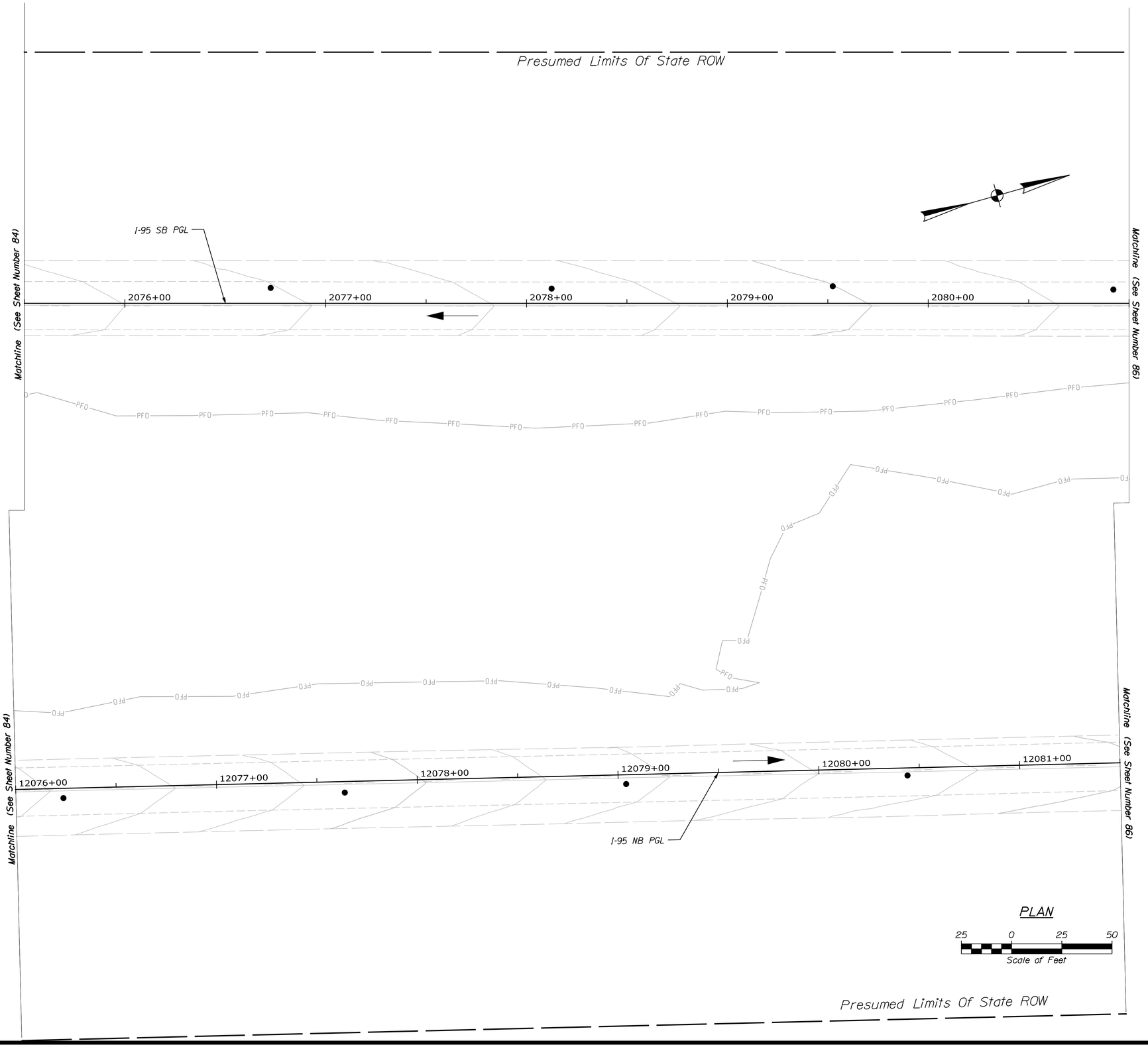

STATE OF MAINE
DEPARTMENT OF TRANSPORTATION

PROJECT NO. 2563106

WIN 25631.06, 25631.07, 25631.08, 25631.09
BRIDGE NO. 1447, 1449, 5984, 5985

BRIDGE PLANS

PROJ. MANAGER	J. BRASK	BY	DATE
DESIGN-DETAILED	S. LINDSLEY	E. MORRISON	06-24
CHECKED-REVIEWED	D. WHITE	B. COLBURN	06-24
DESIGN2-DETAILED2	N. EDMAN	J. FITZ	06-24
DESIGN3-DETAILED3			
REVISIONS 1			
REVISIONS 2			
REVISIONS 3			
REVISIONS 4			
FIELD CHANGES			

SIGNATURE

P.E. NUMBER

DATE

I-95 SB & NB OVER WEBB RD & SOMERSET AVE
BRIDGE NO. 1447, 1449, 5984, 5985
PITTSFIELD SOMERSET COUNTY

TRAFFIC CONTROL PLANS
PHASE 1

SHEET NUMBER

85

OF 110

Filename: ...\Sheet Files\0XX_TCPlan_SB7.dgn Division: Username: jfitzpatrick Date:6/10/2024

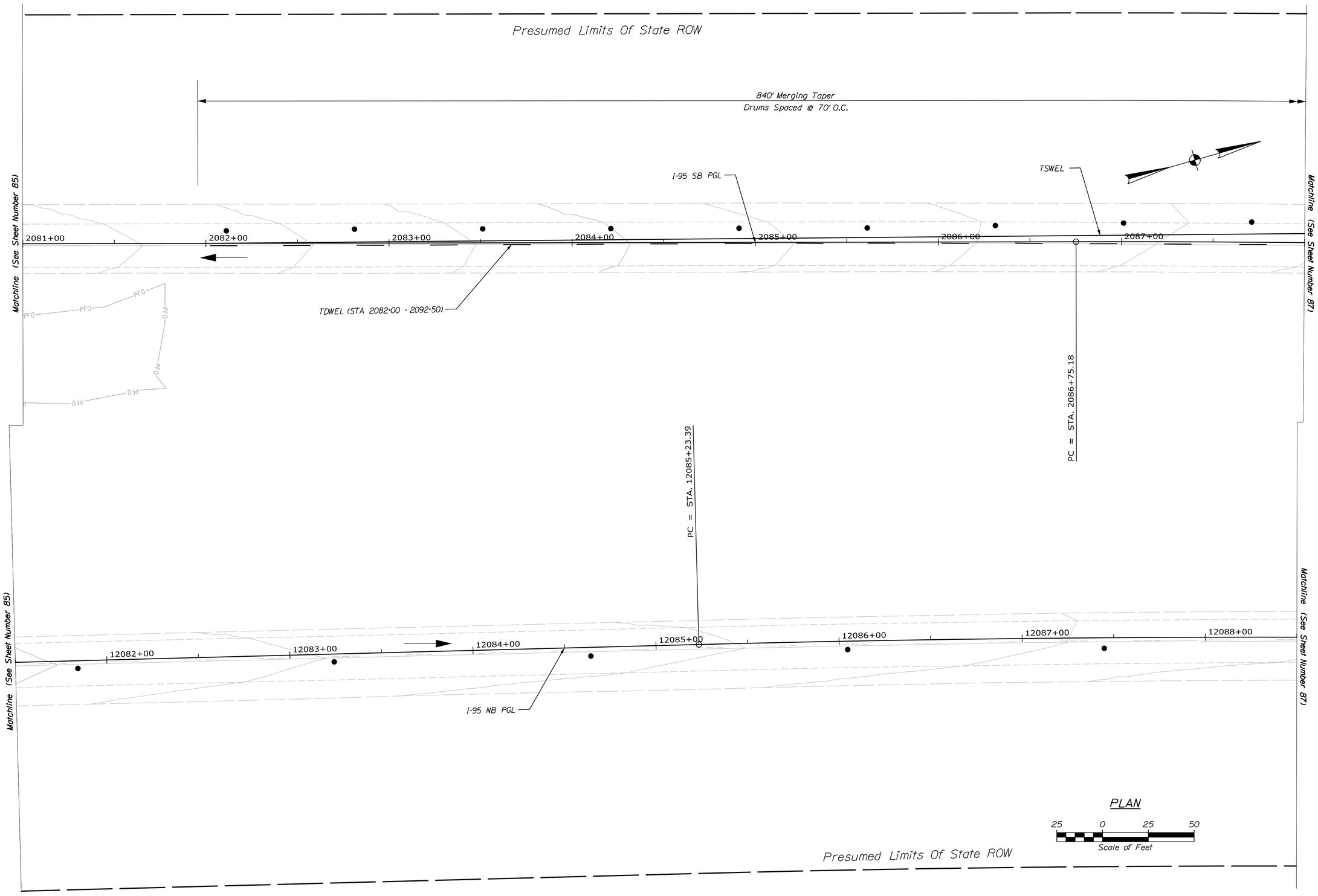

STATE OF MAINE
DEPARTMENT OF TRANSPORTATION

PROJECT NO. 2563106

WIN 25631.06, 25631.07, 25631.08, 25631.09
BRIDGE NO. 1447, 1449, 5984, 5985
BRIDGE PLANS

		BY	DATE
PROJ. MANAGER	J. BRASK		
DESIGN-DETAILED	S. LINDSLEY	E. MORRISON	06-24
CHECKED-REVIEWED	D. WHITE	B. COLBURN	06-24
DESIGN2-DETAILED2	N. EDMAN	J. FITZ	06-24
DESIGN3-DETAILED3			
REVISIONS: 1			
REVISIONS: 2			
REVISIONS: 3			
REVISIONS: 4			
FIELD CHANGES			

SIGNATURE

P.E. NUMBER

DATE

I-95 SB & NB OVER WEBB RD & SOMERSET AVE
BRIDGE NO. 1447, 1449, 5984, 5985
PITTSFIELD SOMERSET COUNTY

TRAFFIC CONTROL PLANS
PHASE 1

SHEET NUMBER
86
OF 110

Filename: ...\Sheet Files\OXX_TCPlan_SB8.dgn Division: Username: jfitzpatrick Date:6/10/2024

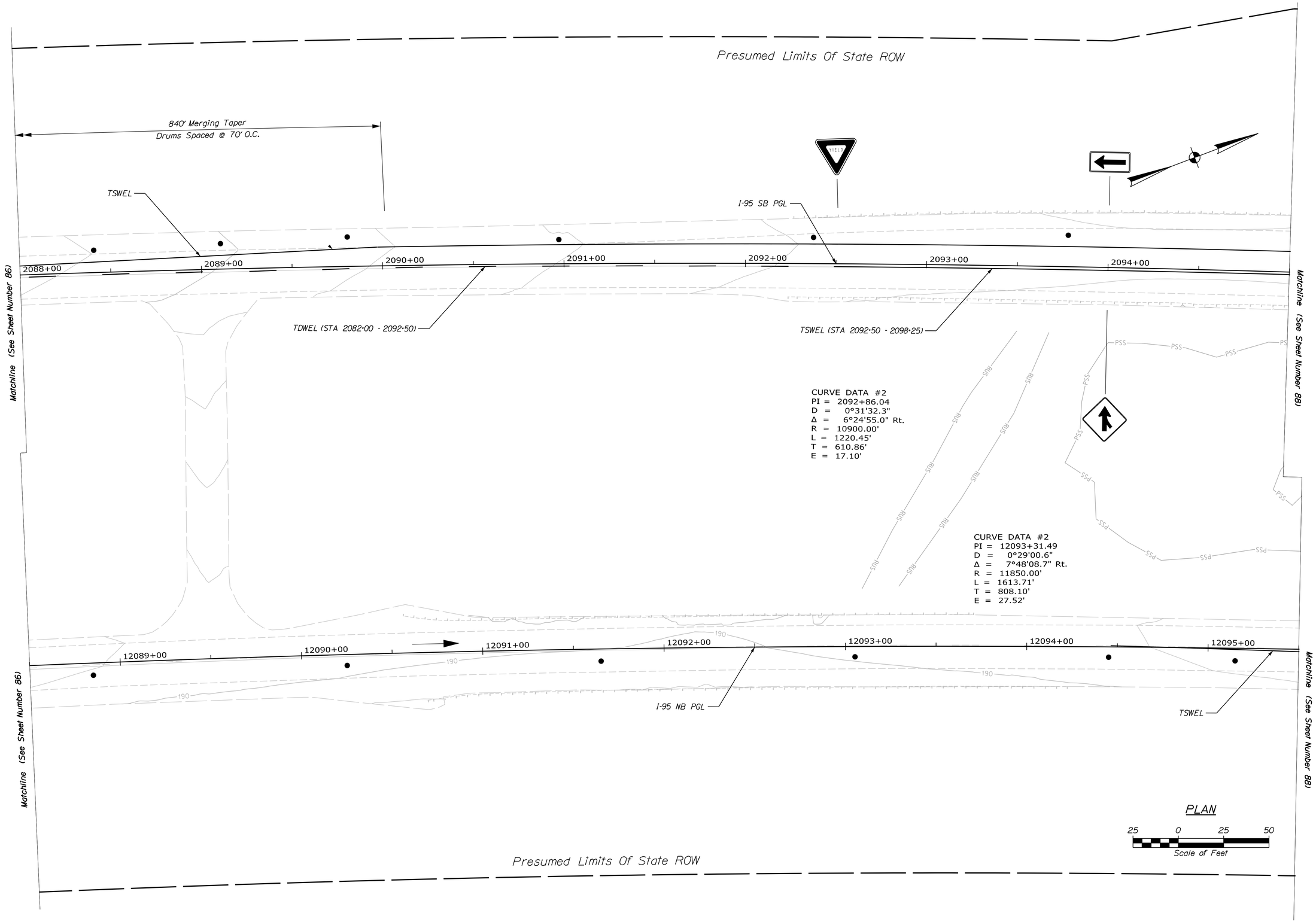

STATE OF MAINE
DEPARTMENT OF TRANSPORTATION

PROJECT NO. 2563106

WIN 25631.06, 25631.07, 25631.08, 25631.09
BRIDGE NO. 1447, 1449, 5984, 5985

BRIDGE PLANS

PROJ. MANAGER	J. BRASK	BY	DATE
DESIGN-DETAILED	S. LINDSLEY	E. MORRISON	06-24
CHECKED-REVIEWED	D. WHITE	B. COLBURN	06-24
DESIGN2-DETAILED2	N. EDMAN	J. FITZ	06-24
DESIGN3-DETAILED3			
REVISIONS 1			
REVISIONS 2			
REVISIONS 3			
REVISIONS 4			
FIELD CHANGES			

SIGNATURE

P.E. NUMBER

DATE

I-95 SB & NB OVER WEBB RD & SOMERSET AVE
BRIDGE NO. 1447, 1449, 5984, 5985
PITTSFIELD SOMERSET COUNTY

TRAFFIC CONTROL PLANS
PHASE 1

SHEET NUMBER
87
OF 110

Filename: ...\Sheet Files\0XX_TCPlan_SB9.dgn Division: Username: jfitzpatrick Date:6/10/2024

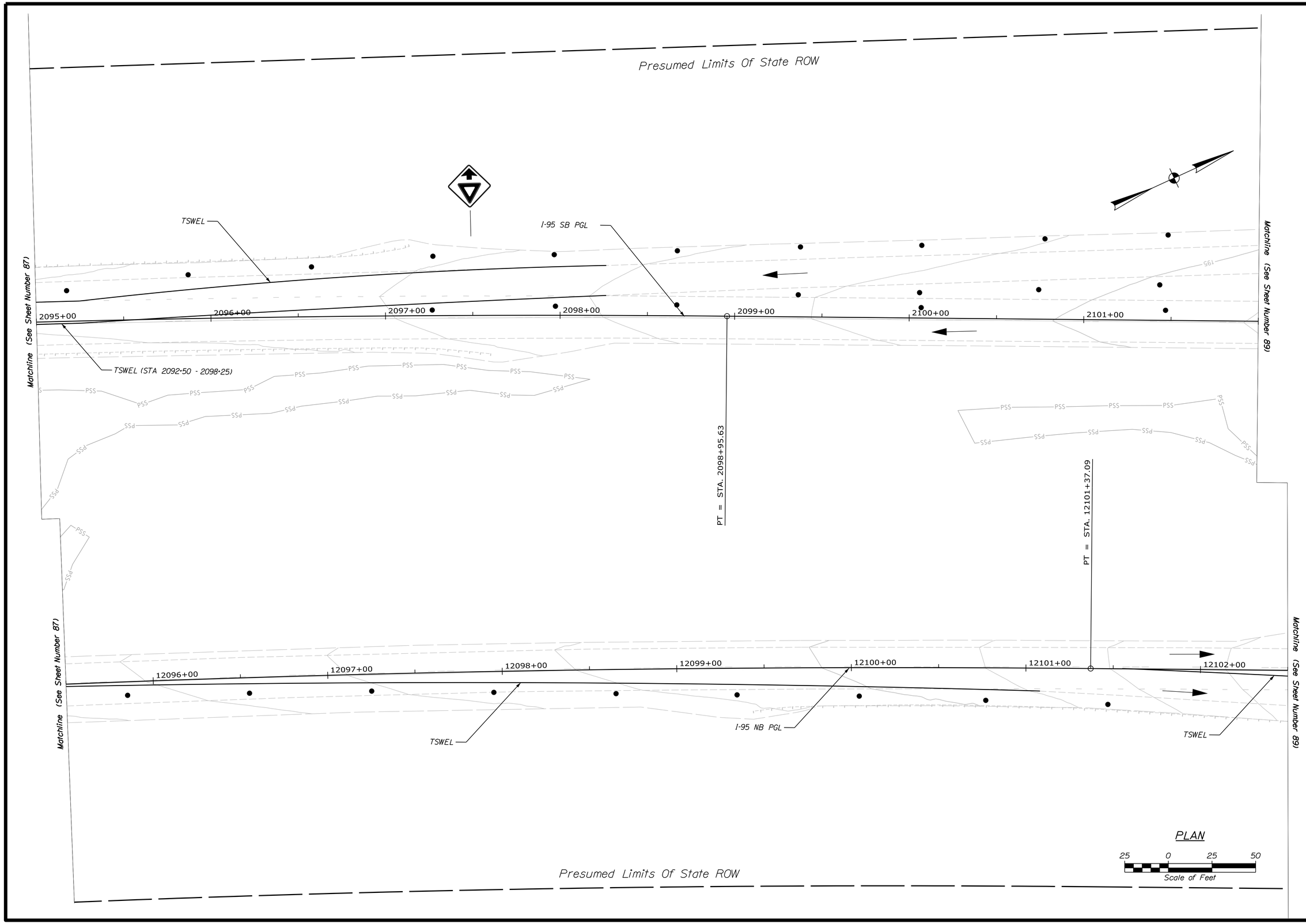

STATE OF MAINE
DEPARTMENT OF TRANSPORTATION

PROJECT NO. 2563106

WIN 25631.06, 25631.07, 25631.08, 25631.09
BRIDGE NO. 1447, 1449, 5984, 5985

BRIDGE PLANS

PROJ. MANAGER	J. BRASK	BY	DATE
DESIGN-DETAILED	S. LINDSLEY	E. MORRISON	06-24
CHECKED-REVIEWED	D. WHITE	B. COLBURN	06-24
DESIGN2-DETAILED2	N. EDMAN	J. FITZ	06-24
DESIGN3-DETAILED3			
REVISIONS 1			
REVISIONS 2			
REVISIONS 3			
REVISIONS 4			
FIELD CHANGES			

SIGNATURE

P.E. NUMBER

DATE

I-95 SB & NB OVER WEBB RD & SOMERSET AVE
BRIDGE NO. 1447, 1449, 5984, 5985
PITTSFIELD SOMERSET COUNTY

TRAFFIC CONTROL PLANS
PHASE 1

SHEET NUMBER
88
OF 110

Filename: ...\0XX_TCPlan_SB10.dgn Division: Username: jfitzpatrick Date:6/10/2024

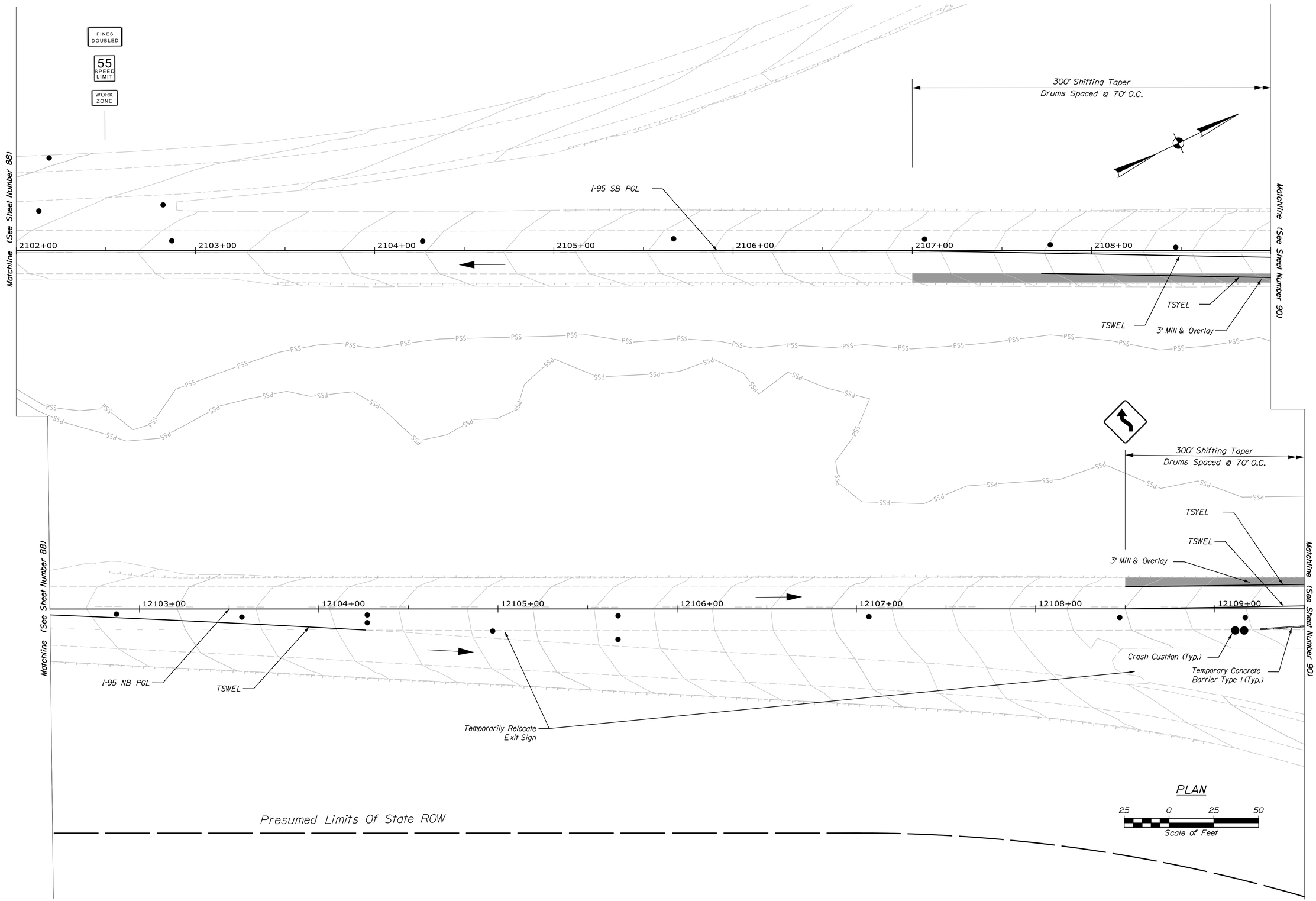

STATE OF MAINE
DEPARTMENT OF TRANSPORTATION

PROJECT NO. 2563106

WIN 25631.06, 25631.07, 25631.08, 25631.09
BRIDGE NO. 1447, 1449, 5984, 5985
BRIDGE PLANS

PROJ. MANAGER	J. BRASK	BY	DATE
DESIGN-DETAILED	S. LINDSLEY	E. MORRISON	06-24
CHECKED-REVIEWED	D. WHITE	B. COLBURN	06-24
DESIGN2-DETAILED2	N. EDMAN	J. FITZ	06-24
DESIGN3-DETAILED3			
REVISIONS 1			
REVISIONS 2			
REVISIONS 3			
REVISIONS 4			
FIELD CHANGES			

SIGNATURE

P.E. NUMBER

DATE

I-95 SB & NB OVER WEBB RD & SOMERSET AVE
BRIDGE NO. 1447, 1449, 5984, 5985
PITTSFIELD SOMERSET COUNTY

TRAFFIC CONTROL PLANS
PHASE 1

SHEET NUMBER
89
OF 110

Filename: ...\OXX_TCPlan_SB11.dgn Division: Username: jfitzpatrick Date:6/10/2024

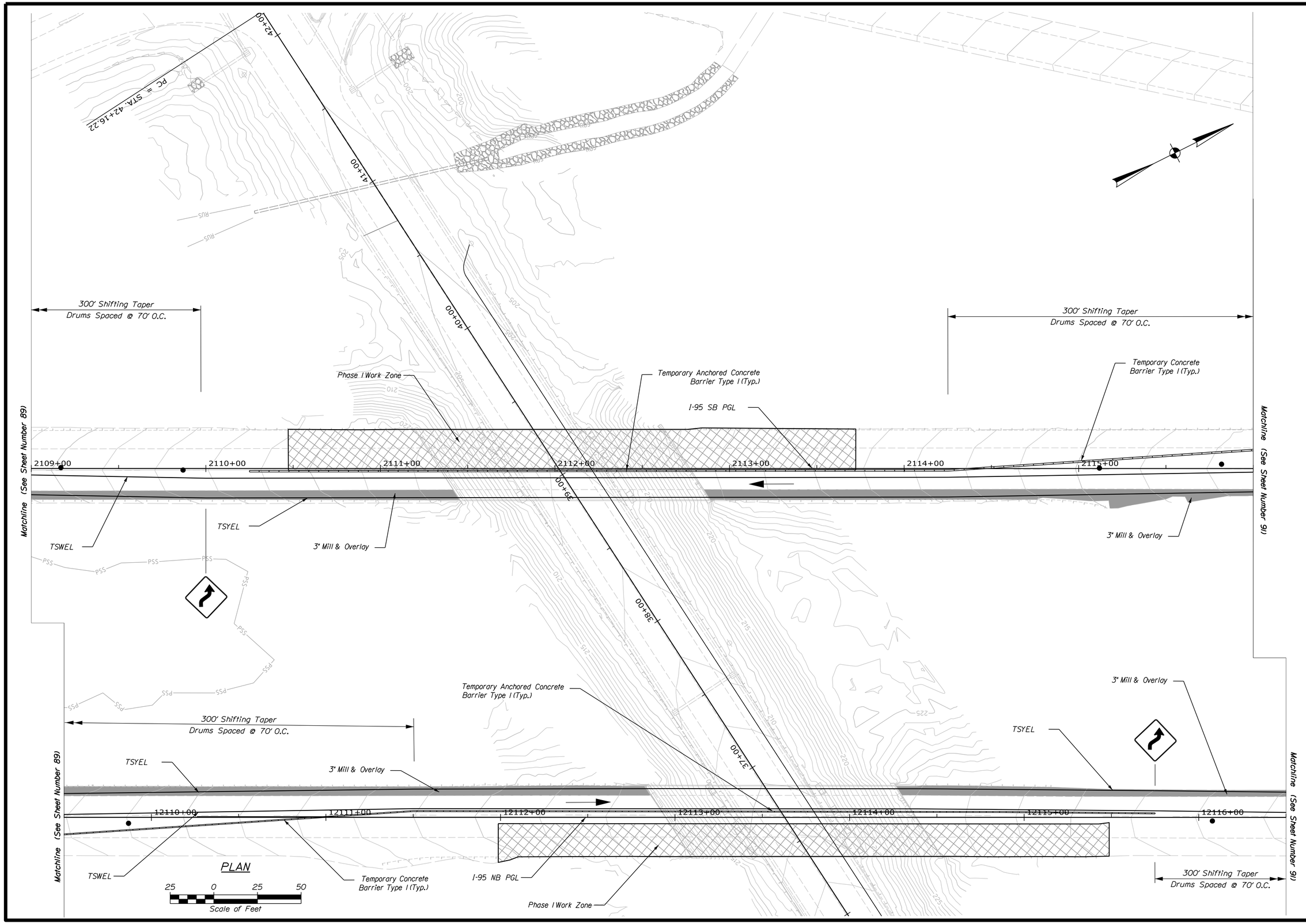

STATE OF MAINE
DEPARTMENT OF TRANSPORTATION

PROJECT NO. 2563106

WIN 25631.06, 25631.07, 25631.08, 25631.09
BRIDGE NO. 1447, 1449, 5984, 5985

BRIDGE PLANS

PROJ. MANAGER		BY	DATE
DESIGN-DETAILED	J. BRASK		
CHECKED-REVIEWED	S. LINDSLEY	E. MORRISON	06-24
DESIGN2-DETAILED2	D. WHITE	B. COLBURN	06-24
DESIGN3-DETAILED3	N. EDMAN	J. FITZ	06-24
REVISIONS 1			
REVISIONS 2			
REVISIONS 3			
REVISIONS 4			
FIELD CHANGES			

SIGNATURE

P.E. NUMBER

DATE

I-95 SB & NB OVER WEBB RD & SOMERSET AVE
BRIDGE NO. 1447, 1449, 5984, 5985
PITTSFIELD SOMERSET COUNTY

TRAFFIC CONTROL PLANS
PHASE 1

SHEET NUMBER

90

OF 110

Filename: ...\OXX_TCPlan_SB12.dgn Division: Username: jfitzpatrick Date:6/10/2024

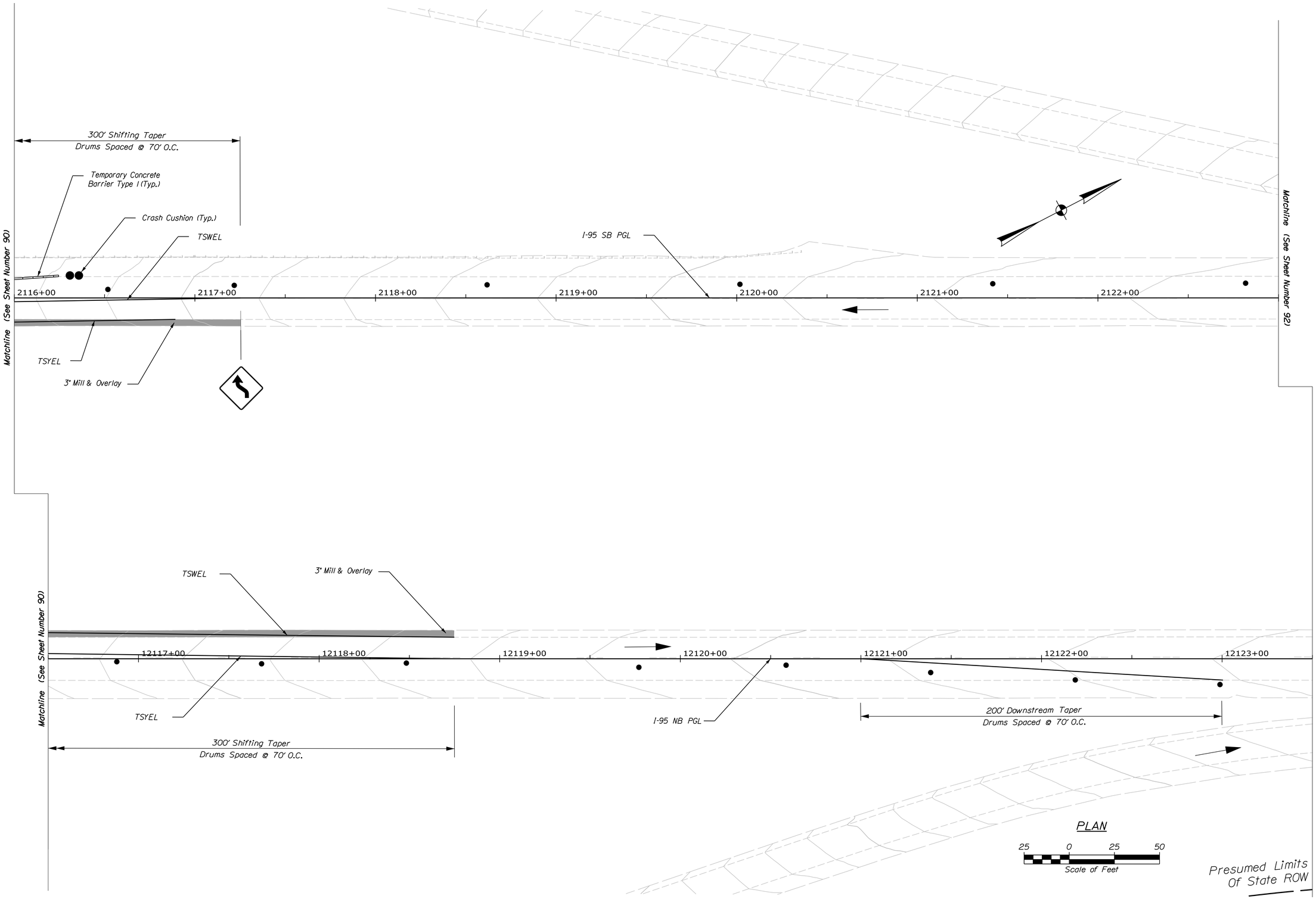

STATE OF MAINE
DEPARTMENT OF TRANSPORTATION

PROJECT NO. 2563106

WIN 25631.06, 25631.07, 25631.08, 25631.09
BRIDGE NO. 1447, 1449, 5984, 5985

BRIDGE PLANS

PROJ. MANAGER	J. BRASK	BY	DATE
DESIGN-DETAILED	S. LINDSLEY	E. MORRISON	06-24
CHECKED-REVIEWED	D. WHITE	B. COLBURN	06-24
DESIGN2-DETAILED2	N. EDMAN	J. FITZ	06-24
DESIGN3-DETAILED3			
REVISIONS 1			
REVISIONS 2			
REVISIONS 3			
REVISIONS 4			
FIELD CHANGES			

SIGNATURE

P.E. NUMBER

DATE

I-95 SB & NB OVER WEBB RD & SOMERSET AVE
BRIDGE NO. 1447, 1449, 5984, 5985
PITTSFIELD SOMERSET COUNTY

TRAFFIC CONTROL PLANS
PHASE 1

SHEET NUMBER
91
OF 110

Filename: ...\0XX_TCPlan_SB13.dgn Division: Username: jfitzpatrick Date:6/10/2024

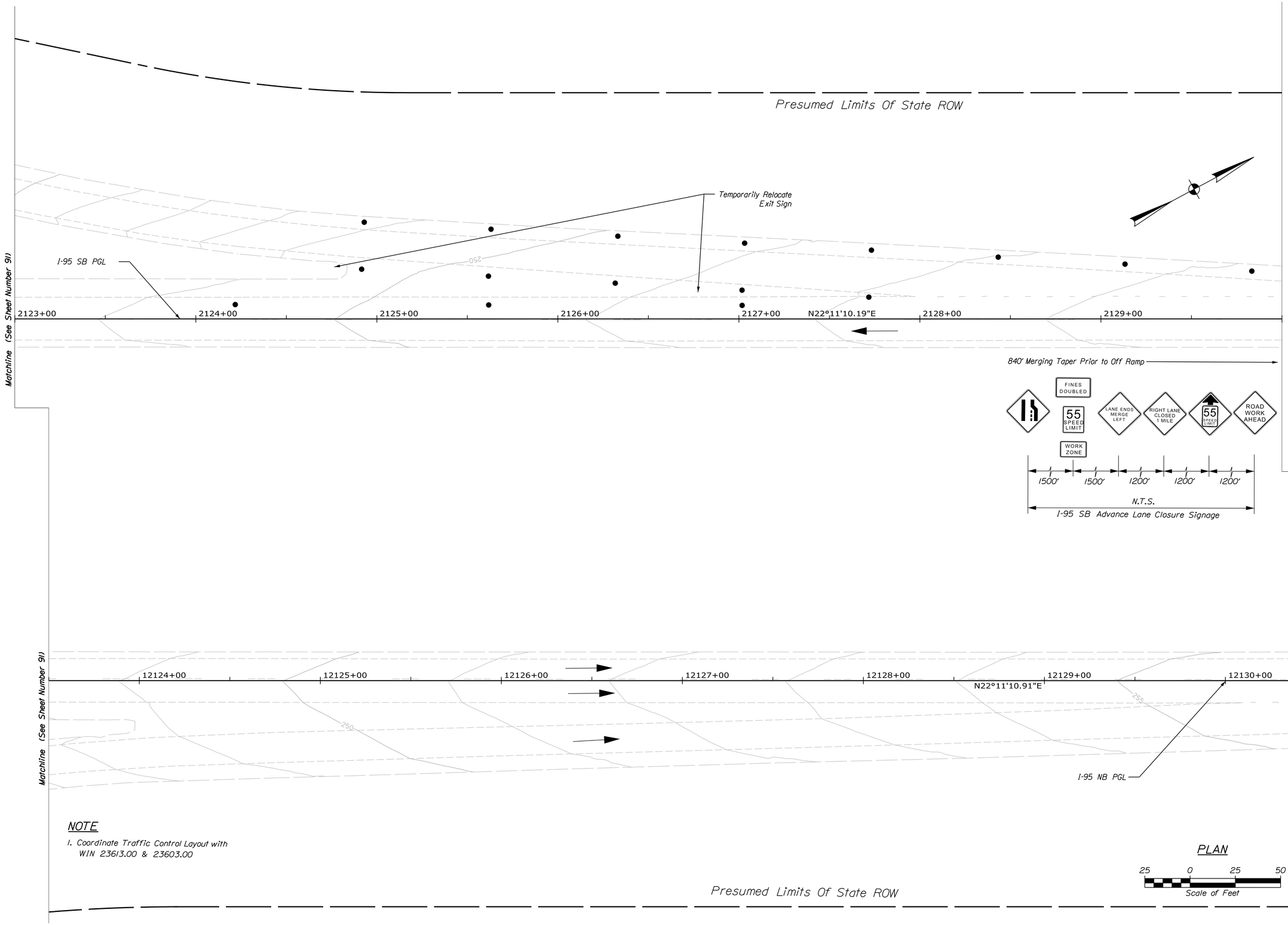

NOTE

1. Coordinate Traffic Control Layout with WIN 23613.00 & 23603.00

STATE OF MAINE
DEPARTMENT OF TRANSPORTATION

PROJECT NO. 2563106

WIN 25631.06, 25631.07, 25631.08, 25631.09
BRIDGE NO. 1447, 1449, 5984, 5985
BRIDGE PLANS

PROJ. MANAGER	J. BRASK	BY	DATE
DESIGN-DETAILED	S. LINDSLEY	E. MORRISON	06-24
CHECKED-REVIEWED	D. WHITE	B. COLBURN	06-24
DESIGN2-DETAILED2	N. EDMAN	J. FITZ	06-24
DESIGN3-DETAILED3			
REVISIONS 1			
REVISIONS 2			
REVISIONS 3			
REVISIONS 4			
FIELD CHANGES			

SIGNATURE

P.E. NUMBER

DATE

I-95 SB & NB OVER WEBB RD & SOMERSET AVE
BRIDGE NO. 1447, 1449, 5984, 5985
PITTSFIELD SOMERSET COUNTY

TRAFFIC CONTROL PLANS
PHASE 1

SHEET NUMBER
92
OF 110

Filename: ...\0XX_TCPlan_SB14.dgn Division: Username: jfitzpatrick Date:6/10/2024

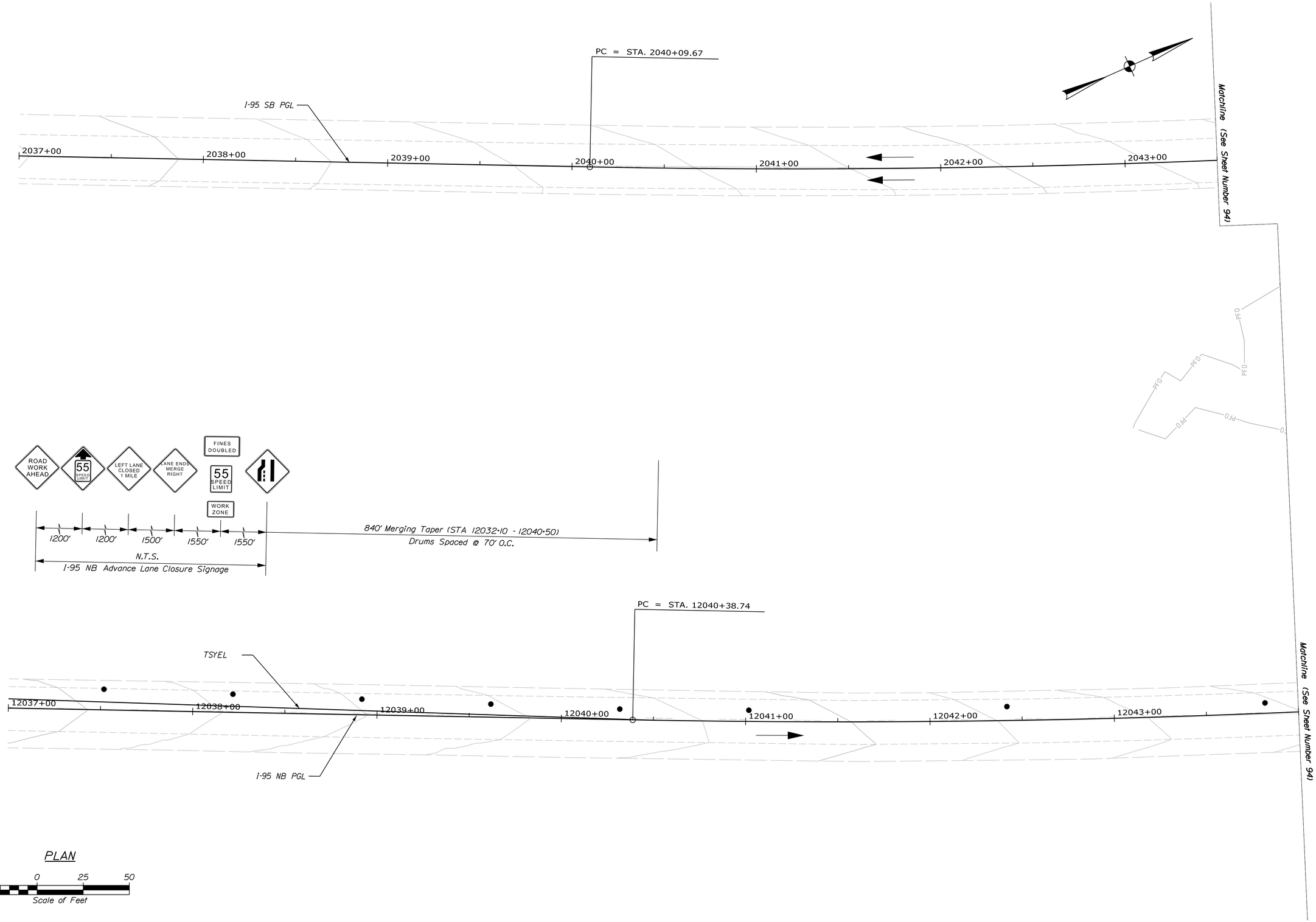

STATE OF MAINE
DEPARTMENT OF TRANSPORTATION

PROJECT NO. 2563106

WIN 25631.06, 25631.07, 25631.08, 25631.09
BRIDGE NO. 1447, 1449, 5984, 5985

BRIDGE PLANS

		BY	DATE
PROJ. MANAGER	J. BRASK		
DESIGN-DETAILED	S. LINDSLEY	E. MORRISON	06-24
CHECKED-REVIEWED	D. WHITE	B. COLBURN	06-24
DESIGN2-DETAILED2	N. EDMAN	J. FITZ	06-24
DESIGN3-DETAILED3			
REVISIONS 1			
REVISIONS 2			
REVISIONS 3			
REVISIONS 4			
FIELD CHANGES			

SIGNATURE

P.E. NUMBER

DATE

I-95 SB & NB OVER WEBB RD & SOMERSET AVE
BRIDGE NO. 1447, 1449, 5984, 5985
PITTSFIELD SOMERSET COUNTY

TRAFFIC CONTROL PLANS
PHASE 2

SHEET NUMBER
93
OF 110

Filename: ...\Sheet Files\0XX_TCPlan_NB1.dgn Division: Username: jfitzpatrick Date:6/10/2024

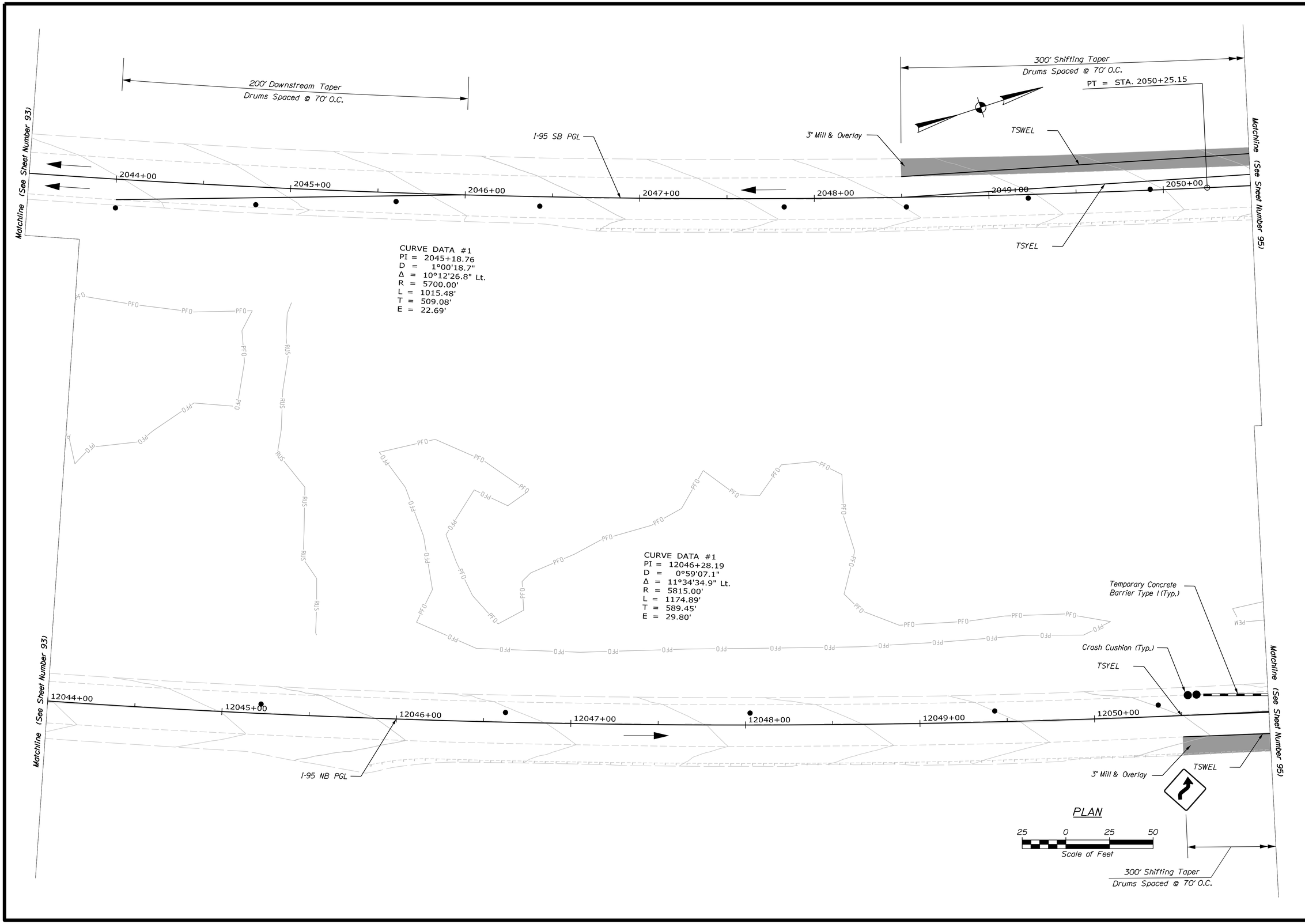

STATE OF MAINE
DEPARTMENT OF TRANSPORTATION

PROJECT NO. 2563106

WIN 25631.06, 25631.07, 25631.08, 25631.09
BRIDGE NO. 1447, 1449, 5984, 5985

BRIDGE PLANS

PROJ. MANAGER	J. BRASK	BY	DATE
DESIGN-DETAILED	S. LINDSLEY	E. MORRISON	06-24
CHECKED-REVIEWED	D. WHITE	B. COLBURN	06-24
DESIGN2-DETAILED2	N. EDMAN	J. FITZ	06-24
DESIGN3-DETAILED3			
REVISIONS: 1			
REVISIONS: 2			
REVISIONS: 3			
REVISIONS: 4			
FIELD CHANGES			

SIGNATURE

P.E. NUMBER

DATE

I-95 SB & NB OVER WEBB RD & SOMERSET AVE
BRIDGE NO. 1447, 1449, 5984, 5985
PITTSFIELD SOMERSET COUNTY

TRAFFIC CONTROL PLANS
PHASE 2

SHEET NUMBER

94

OF 110

Filename: ...\Sheet Files\OXX_TCPlan_NB2.dgn Division: Username: jfitzpatrick Date:6/10/2024

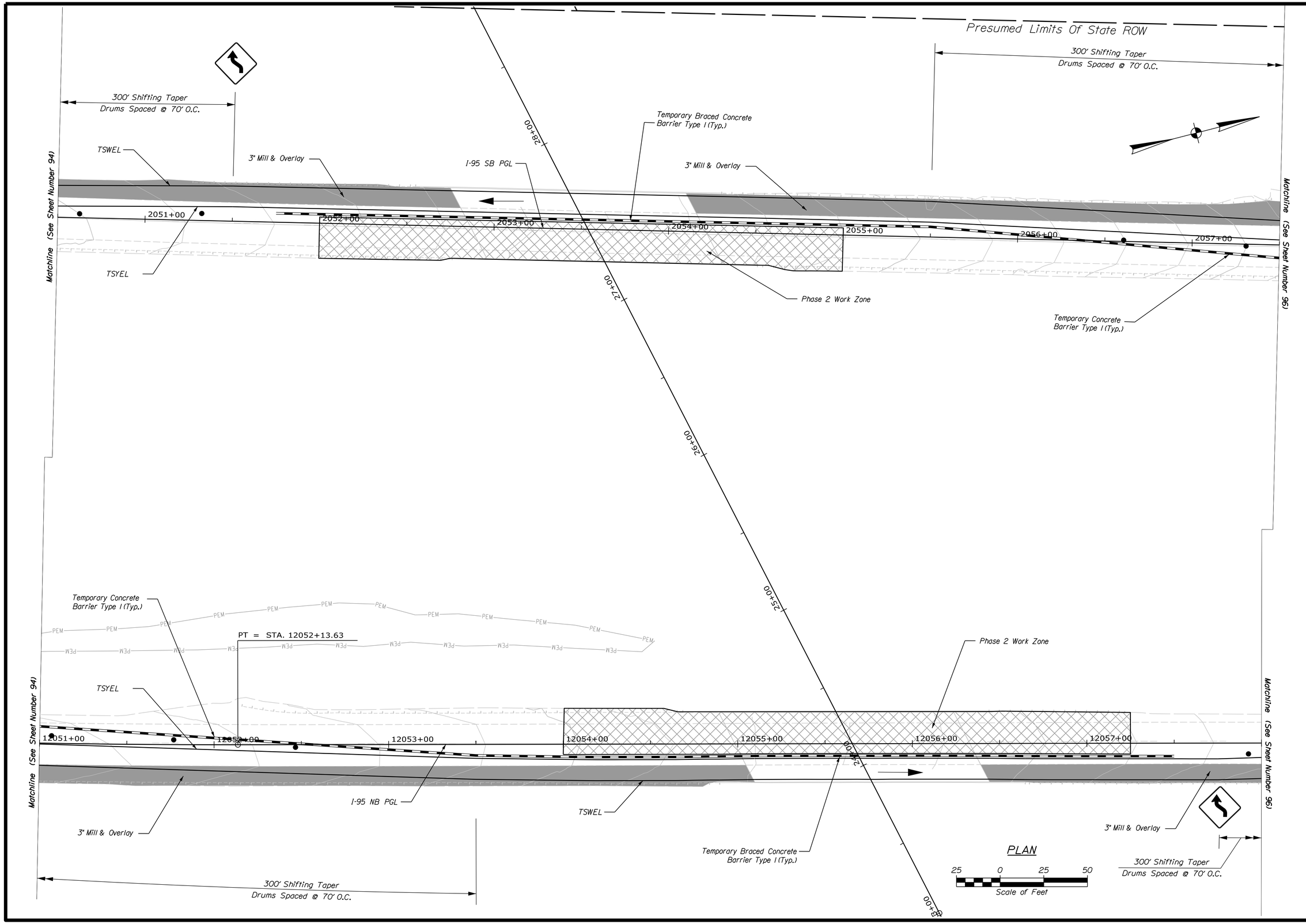

STATE OF MAINE
DEPARTMENT OF TRANSPORTATION

PROJECT NO. 2563106

WIN 25631.06, 25631.07, 25631.08, 25631.09
BRIDGE NO. 1447, 1449, 5984, 5985

BRIDGE PLANS

PROJ. MANAGER	J. BRASK	BY	DATE
DESIGN-DETAILED	S. LINDSLEY	E. MORRISON	06-24
CHECKED-REVIEWED	D. WHITE	B. COLBURN	06-24
DESIGN2-DETAILED2	N. EDMAN	J. FITZ	06-24
DESIGN3-DETAILED3			
REVISIONS 1			
REVISIONS 2			
REVISIONS 3			
REVISIONS 4			
FIELD CHANGES			

SIGNATURE

P.E. NUMBER

DATE

I-95 SB & NB OVER WEBB RD & SOMERSET AVE
BRIDGE NO. 1447, 1449, 5984, 5985
PITTSFIELD SOMERSET COUNTY

TRAFFIC CONTROL PLANS
PHASE 2

SHEET NUMBER
95
OF 110

Filename: ...\Sheet Files\0XX_TCPlan_NB3.dgn Division: Username: jfitzpatrick Date:6/10/2024

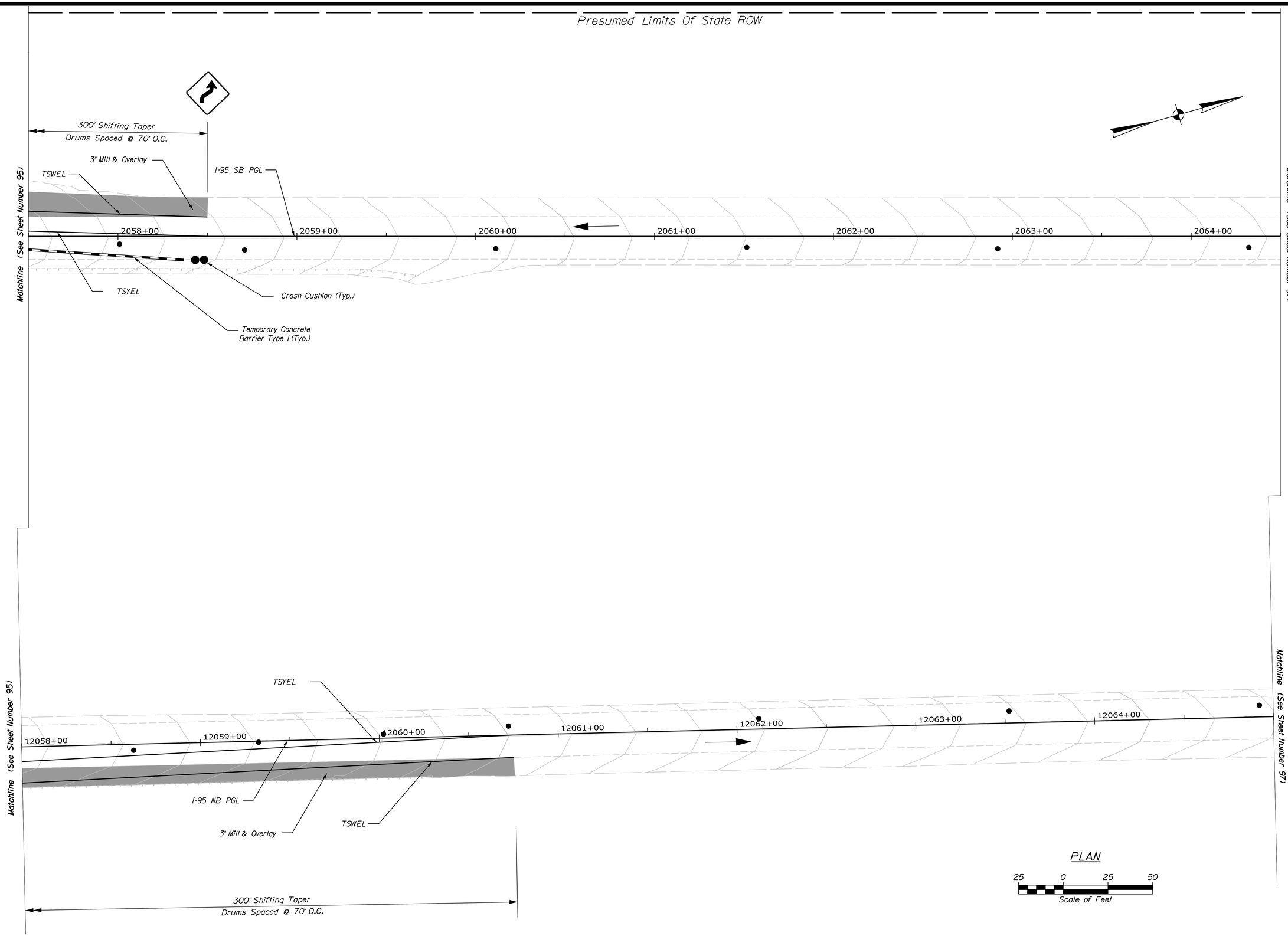

STATE OF MAINE
DEPARTMENT OF TRANSPORTATION

PROJECT NO. 2563106

WIN 25631.06, 25631.07, 25631.08, 25631.09
BRIDGE NO. 1447, 1449, 5984, 5985
BRIDGE PLANS

PROJ. MANAGER	J. BRASK	BY	DATE
DESIGN-DETAILED	S. LINDSLEY	E. MORRISON	06-24
CHECKED-REVIEWED	D. WHITE	B. COLBURN	06-24
DESIGN2-DETAILED2	N. EDMAN	J. FITZ	06-24
DESIGN3-DETAILED3			
REVISIONS 1			
REVISIONS 2			
REVISIONS 3			
REVISIONS 4			
FIELD CHANGES			

SIGNATURE

P.E. NUMBER

DATE

I-95 SB & NB OVER WEBB RD & SOMERSET AVE
BRIDGE NO. 1447, 1449, 5984, 5985
PITTSFIELD SOMERSET COUNTY

TRAFFIC CONTROL PLANS
PHASE 2

SHEET NUMBER
96
OF 110

Filename: ...\Sheet Files\0XX_TCPlan_NB4.dgn Division: Username: jfitzpatrick Date:6/10/2024

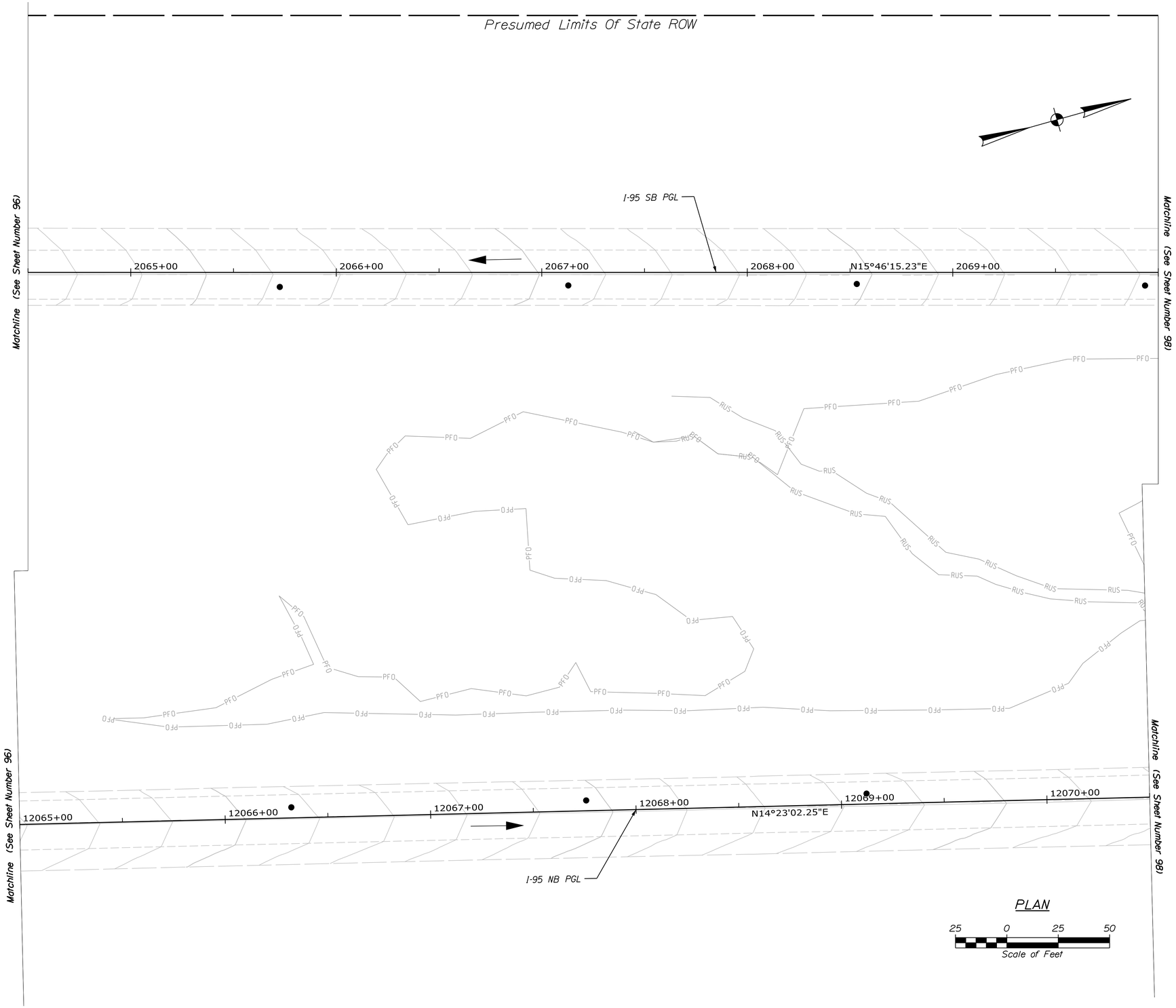

STATE OF MAINE
DEPARTMENT OF TRANSPORTATION

PROJECT NO. 2563106

WIN 25631.06, 25631.07, 25631.08, 25631.09
BRIDGE NO. 1447, 1449, 5984, 5985

BRIDGE PLANS

PROJ. MANAGER	J. BRASK	BY	DATE
DESIGN-DETAILED	S. LINDSLEY	E. MORRISON	06-24
CHECKED-REVIEWED	D. WHITE	B. COLBURN	06-24
DESIGN2-DETAILED2	N. EDMAN	J. FITZ	06-24
DESIGN3-DETAILED3			
REVISIONS 1			
REVISIONS 2			
REVISIONS 3			
REVISIONS 4			
FIELD CHANGES			

SIGNATURE

P.E. NUMBER

DATE

I-95 SB & NB OVER WEBB RD & SOMERSET AVE
BRIDGE NO. 1447, 1449, 5984, 5985
PITTSFIELD SOMERSET COUNTY

TRAFFIC CONTROL PLANS
PHASE 2

SHEET NUMBER
97
OF 110

Filename: ...\Sheet Files\0XX_TCPlan_NB5.dgn Division: Username: jfitzpatrick Date:6/10/2024

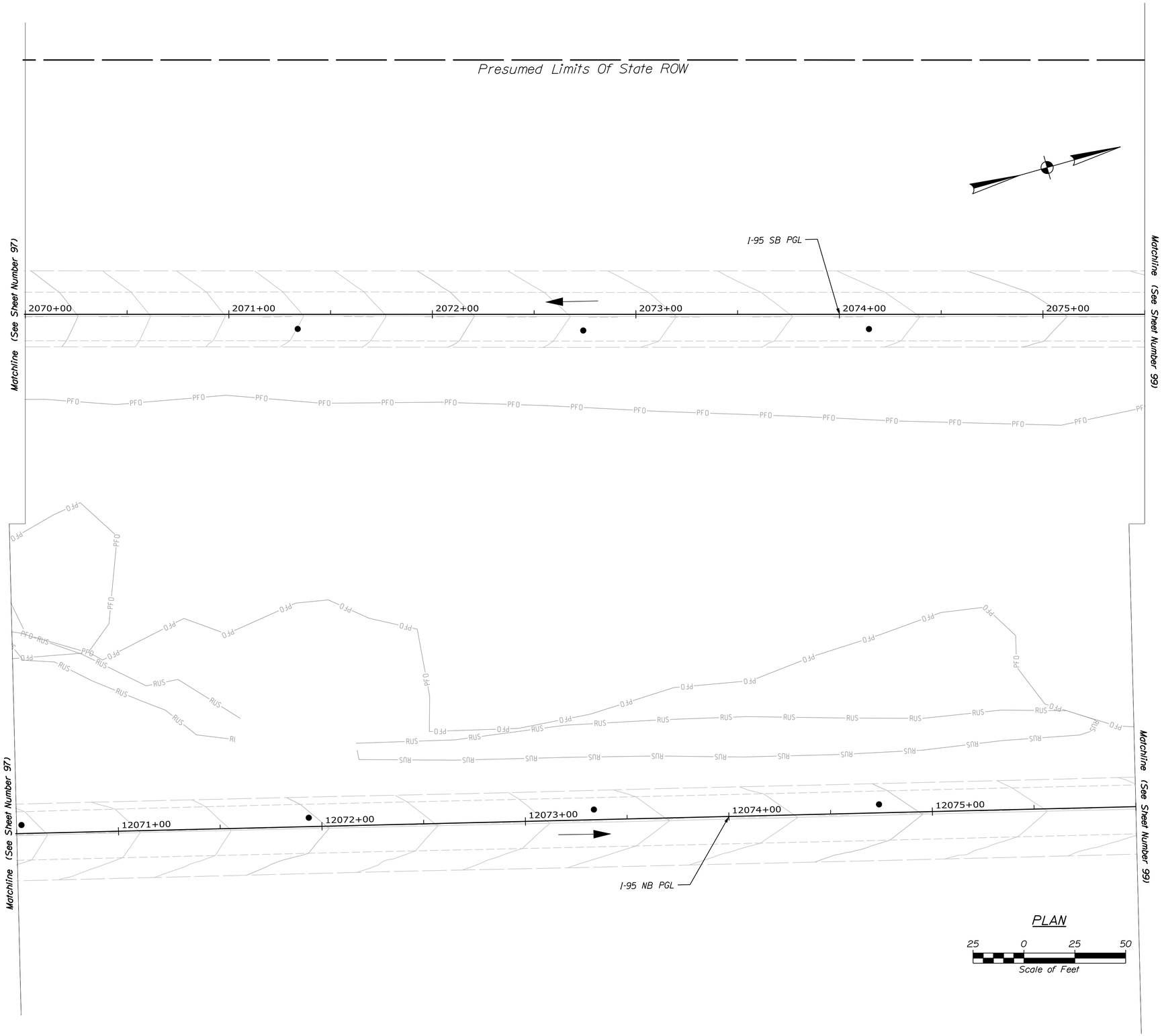

STATE OF MAINE
DEPARTMENT OF TRANSPORTATION

PROJECT NO. 2563106

WIN 25631.06, 25631.07, 25631.08, 25631.09
BRIDGE NO. 1447, 1449, 5984, 5985

BRIDGE PLANS

PROJ. MANAGER	J. BRASK	BY	DATE
DESIGN-DETAILED	S. LINDSLEY	E. MORRISON	06-24
CHECKED-REVIEWED	D. WHITE	B. COLBURN	06-24
DESIGN2-DETAILED2	N. EDMAN	J. FITZ	06-24
DESIGN3-DETAILED3			
REVISIONS 1			
REVISIONS 2			
REVISIONS 3			
REVISIONS 4			
FIELD CHANGES			

SIGNATURE

P.E. NUMBER

DATE

I-95 SB & NB OVER WEBB RD & SOMERSET AVE
BRIDGE NO. 1447, 1449, 5984, 5985
PITTSFIELD SOMERSET COUNTY

TRAFFIC CONTROL PLANS
PHASE 2

SHEET NUMBER

98

OF 110

Filename: ...\Sheet Files\0XX_TCPlan_NB6.dgn Division: Username: jfitzpatrick Date:6/10/2024

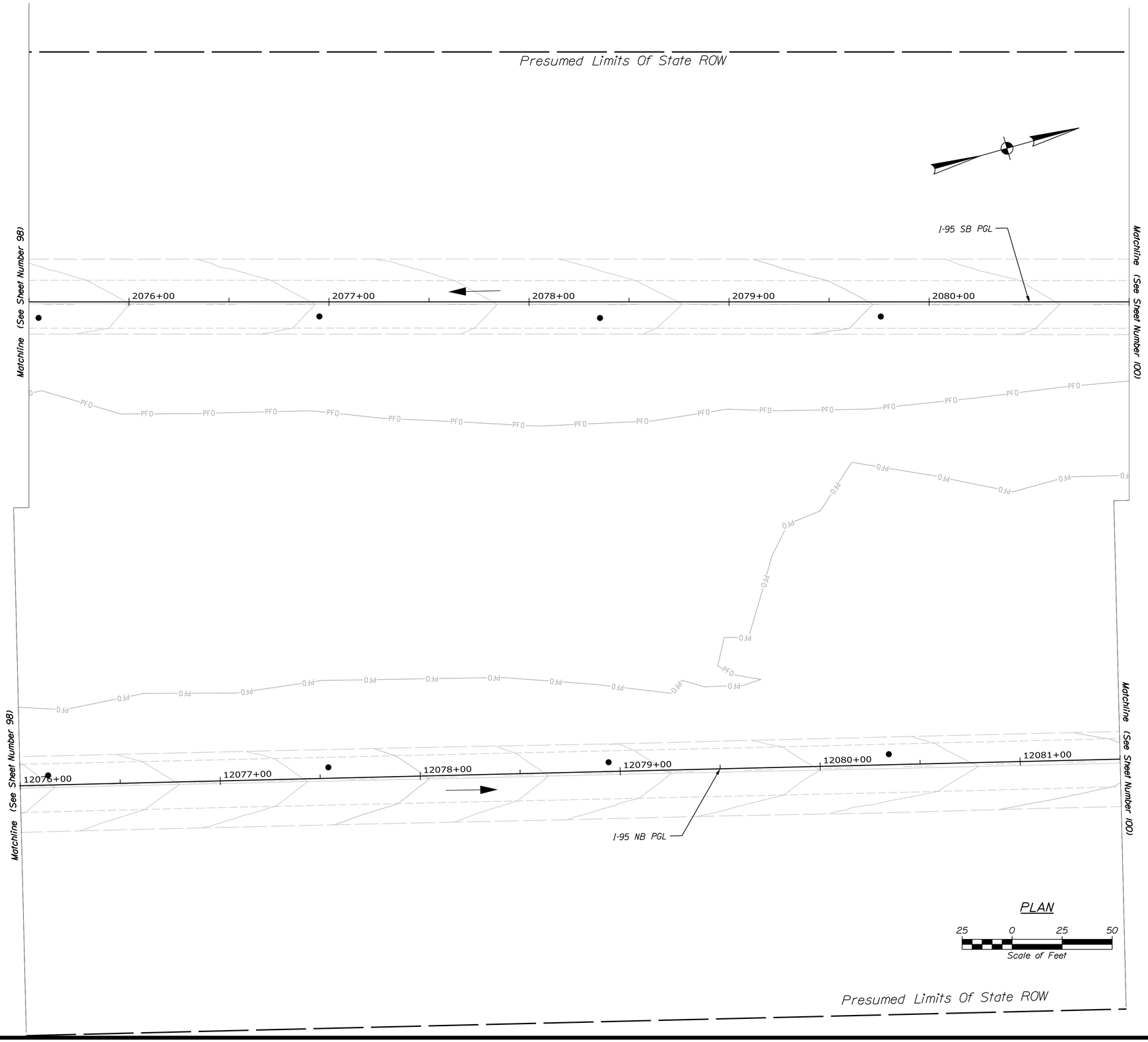

STATE OF MAINE
DEPARTMENT OF TRANSPORTATION

PROJECT NO. 2563106

WIN 25631.06, 25631.07, 25631.08, 25631.09
BRIDGE NO. 1447, 1449, 5984, 5985
BRIDGE PLANS

PROJ. MANAGER	J. BRASK	BY	DATE
DESIGN-DETAILED	S. LINDSLEY	E. MORRISON	06-24
CHECKED-REVIEWED	D. WHITE	B. COLBURN	06-24
DESIGN2-DETAILED2	N. EDMAN	J. FITZ	06-24
DESIGN3-DETAILED3			
REVISIONS 1			
REVISIONS 2			
REVISIONS 3			
REVISIONS 4			
FIELD CHANGES			

SIGNATURE

P.E. NUMBER

DATE

I-95 SB & NB OVER WEBB RD & SOMERSET AVE
BRIDGE NO. 1447, 1449, 5984, 5985
PITTSFIELD SOMERSET COUNTY

TRAFFIC CONTROL PLANS
PHASE 2

SHEET NUMBER
99
OF 110

Filename: ...\Sheet Files\0XX_TCPlan_NB7.dgn Division: Username: jfitzpatrick Date:6/10/2024

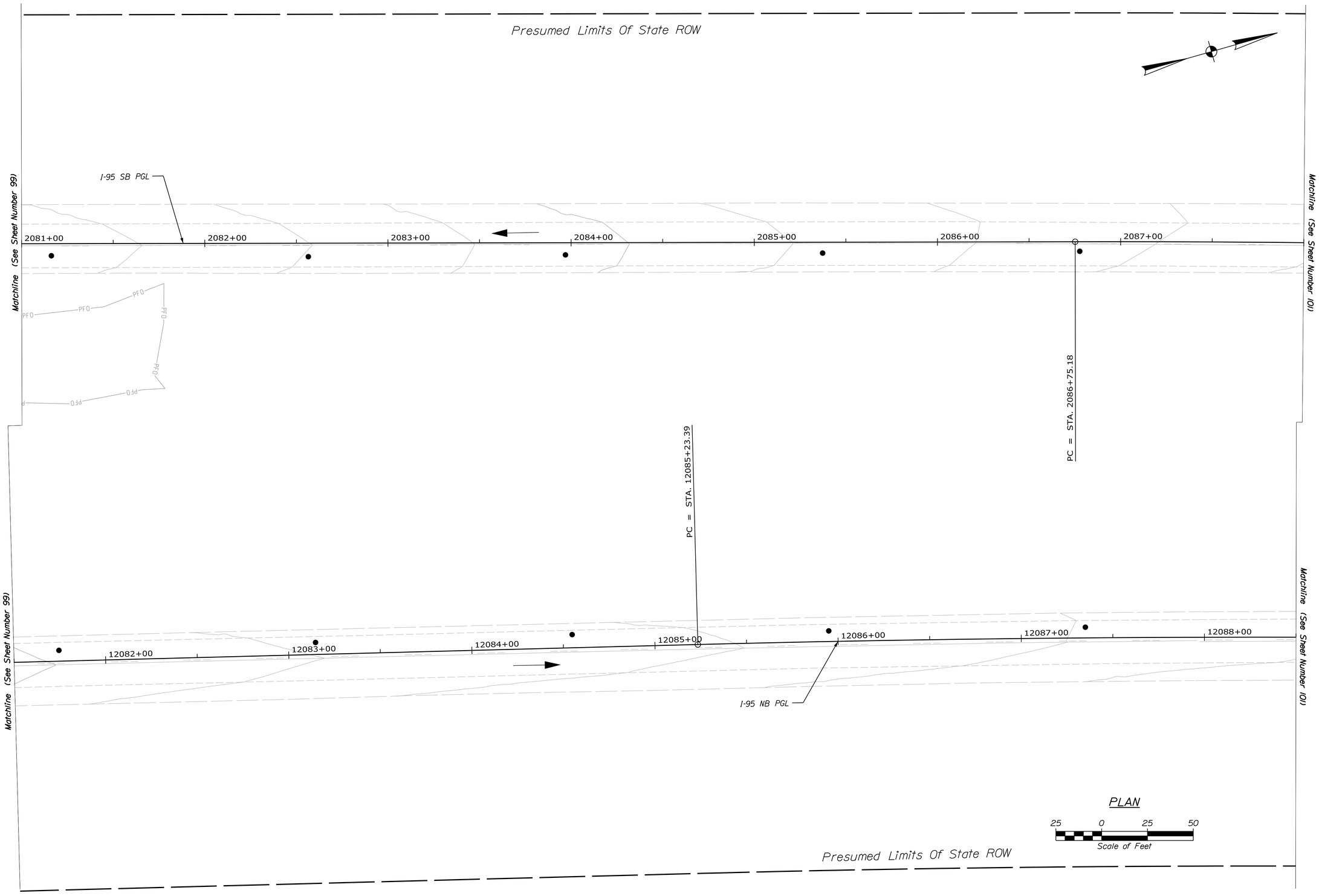

STATE OF MAINE
DEPARTMENT OF TRANSPORTATION

PROJECT NO. 2563106

WIN 25631.06, 25631.07, 25631.08, 25631.09
BRIDGE NO. 1447, 1449, 5984, 5985
BRIDGE PLANS

		BY	DATE
PROJ. MANAGER	J. BRASK		
DESIGN-DETAILED	S. LINDSLEY	E. MORRISON	06-24
CHECKED-REVIEWED	D. WHITE	B. COLBURN	06-24
DESIGN2-DETAILED2	N. EDMAN	J. FITZ	06-24
DESIGN3-DETAILED3			
REVISIONS 1			
REVISIONS 2			
REVISIONS 3			
REVISIONS 4			
FIELD CHANGES			

SIGNATURE

P.E. NUMBER

DATE

I-95 SB & NB OVER WEBB RD & SOMERSET AVE
BRIDGE NO. 1447, 1449, 5984, 5985
PITTSFIELD SOMERSET COUNTY

TRAFFIC CONTROL PLANS
PHASE 2

SHEET NUMBER
100
OF 110

Filename: ...\Sheet Files\OXX_TCPlan_NB8.dgn Division: Username: jfitzpatrick Date:6/10/2024

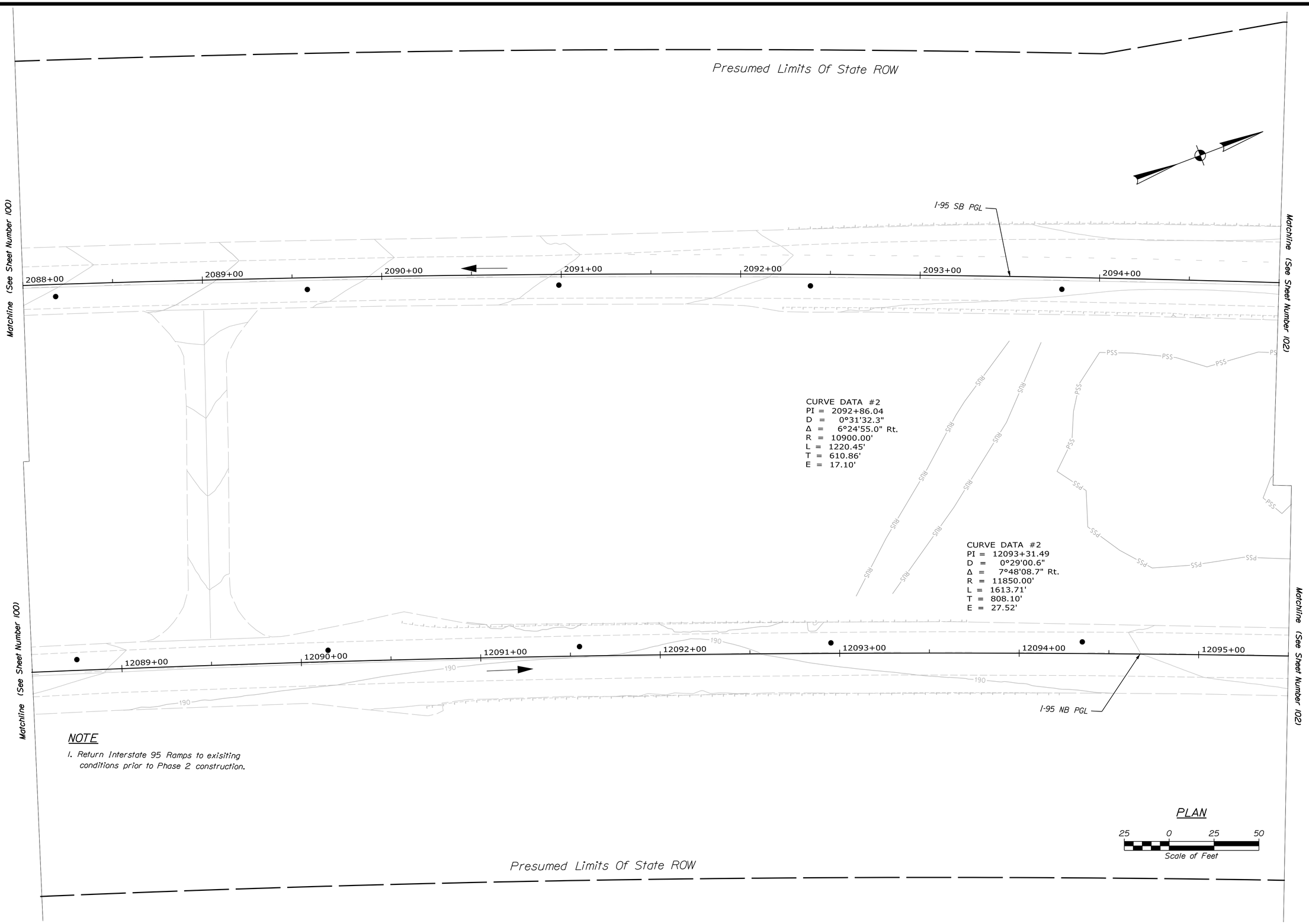

STATE OF MAINE
DEPARTMENT OF TRANSPORTATION

PROJECT NO. 2563106

WIN 25631.06, 25631.07, 25631.08, 25631.09
BRIDGE NO. 1447, 1449, 5984, 5985
BRIDGE PLANS

		BY	DATE
PROJ. MANAGER	J. BRASK		
DESIGN-DETAILED	S. LINDSLEY	E. MORRISON	06-24
CHECKED-REVIEWED	D. WHITE	B. COLBURN	06-24
DESIGN2-DETAILED2	N. EDMAN	J. FITZ	06-24
DESIGN3-DETAILED3			
REVISIONS 1			
REVISIONS 2			
REVISIONS 3			
REVISIONS 4			
FIELD CHANGES			

SIGNATURE

P.E. NUMBER

DATE

I-95 SB & NB OVER WEBB RD & SOMERSET AVE
BRIDGE NO. 1447, 1449, 5984, 5985
PITTSFIELD SOMERSET COUNTY

TRAFFIC CONTROL PLANS
PHASE 2

SHEET NUMBER
101
OF 110

Filename: ...\Sheet Files\0XX_TCPlan_NB9.dgn Division: Username: jfitzpatrick Date:6/10/2024

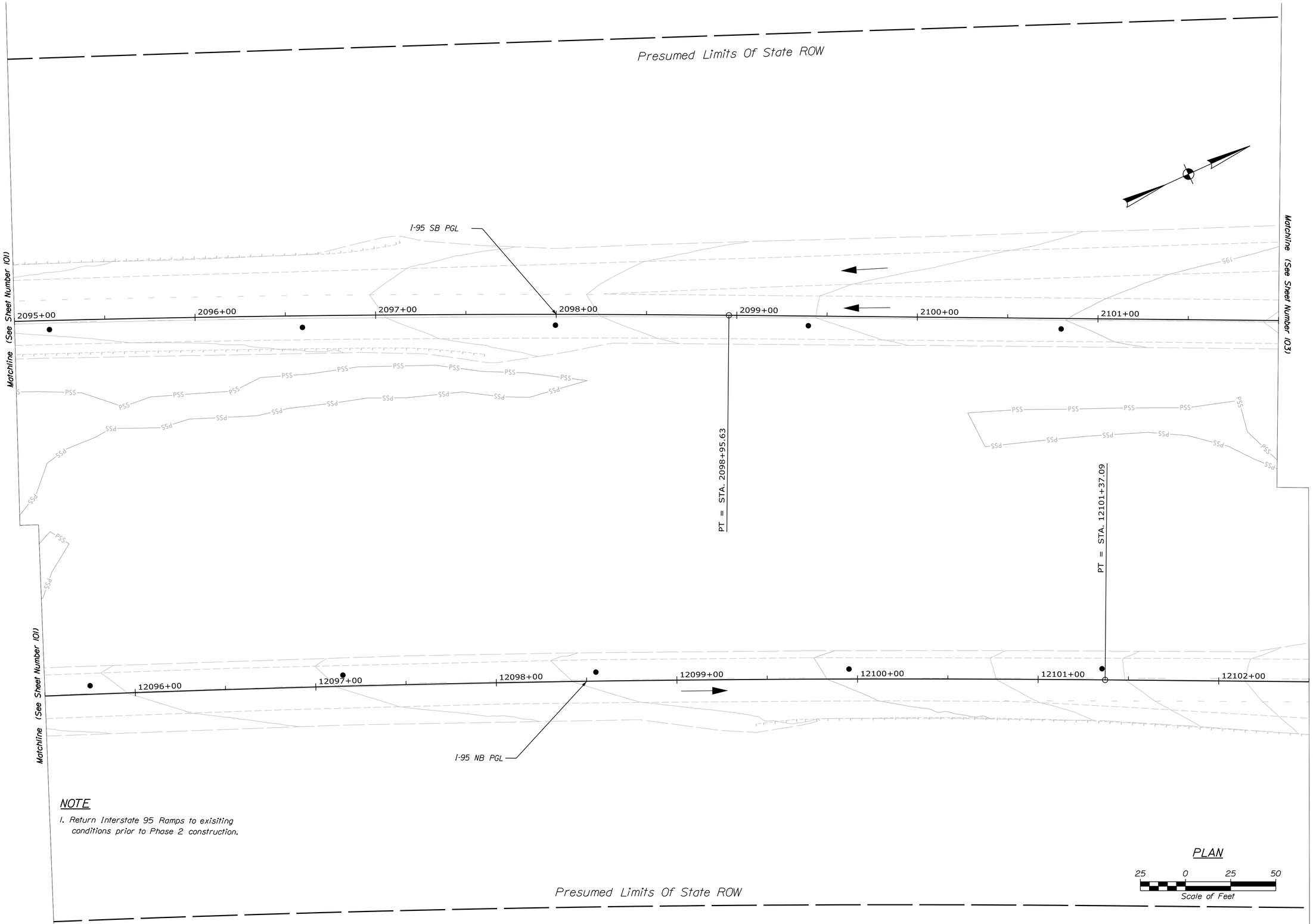

NOTE

1. Return Interstate 95 Ramps to exisiting conditions prior to Phase 2 construction.

STATE OF MAINE
DEPARTMENT OF TRANSPORTATION

PROJECT NO. 2563106

WIN 25631.06, 25631.07, 25631.08, 25631.09
BRIDGE NO. 1447, 1449, 5984, 5985

BRIDGE PLANS

PROJ. MANAGER	J. BRASK	BY	DATE
DESIGN-DETAILED	S. LINDSLEY	E. MORRISON	06-24
CHECKED-REVIEWED	D. WHITE	B. COLBURN	06-24
DESIGN2-DETAILED2	N. EDMAN	J. FITZ	06-24
DESIGN3-DETAILED3			
REVISIONS 1			
REVISIONS 2			
REVISIONS 3			
REVISIONS 4			
FIELD CHANGES			

SIGNATURE

P.E. NUMBER

DATE

I-95 SB & NB OVER WEBB RD & SOMERSET AVE
BRIDGE NO. 1447, 1449, 5984, 5985
PITTSFIELD SOMERSET COUNTY

TRAFFIC CONTROL PLANS
PHASE 2

SHEET NUMBER
102
OF 110

Filename: ...\0XX_TCPlan_NB10.dgn Division: Username: jfitzpatrick Date:6/10/2024

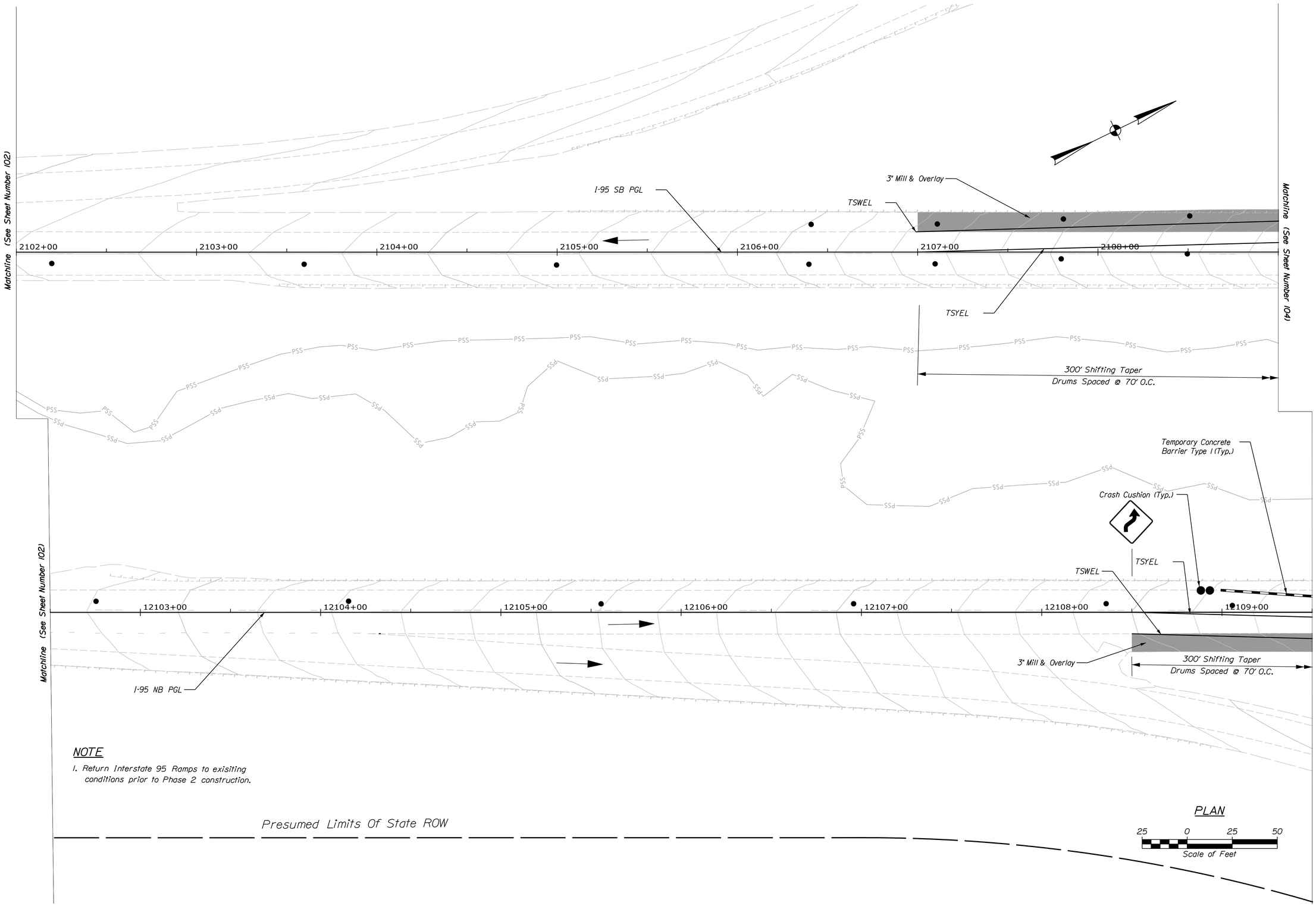

NOTE

1. Return Interstate 95 Ramps to exisiting conditions prior to Phase 2 construction.

STATE OF MAINE
DEPARTMENT OF TRANSPORTATION

PROJECT NO. 2563106

WIN 25631.06, 25631.07, 25631.08, 25631.09
BRIDGE NO. 1447, 1449, 5984, 5985

BRIDGE PLANS

PROJ. MANAGER	J. BRASK	BY	DATE
DESIGN-DETAILED	S. LINDSLEY	E. MORRISON	06-24
CHECKED-REVIEWED	D. WHITE	B. COLBURN	06-24
DESIGN2-DETAILED2	N. EDMAN	J. FITZ	06-24
DESIGN3-DETAILED3			
REVISIONS 1			
REVISIONS 2			
REVISIONS 3			
REVISIONS 4			
FIELD CHANGES			

SIGNATURE

P.E. NUMBER

DATE

I-95 SB & NB OVER WEBB RD & SOMERSET AVE
BRIDGE NO. 1447, 1449, 5984, 5985
PITTSFIELD SOMERSET COUNTY

TRAFFIC CONTROL PLANS
PHASE 2

SHEET NUMBER

103

OF 110

Filename: ...\0XX_TCPlan_NB11.dgn Division: Username: jfitzpatrick Date:6/10/2024

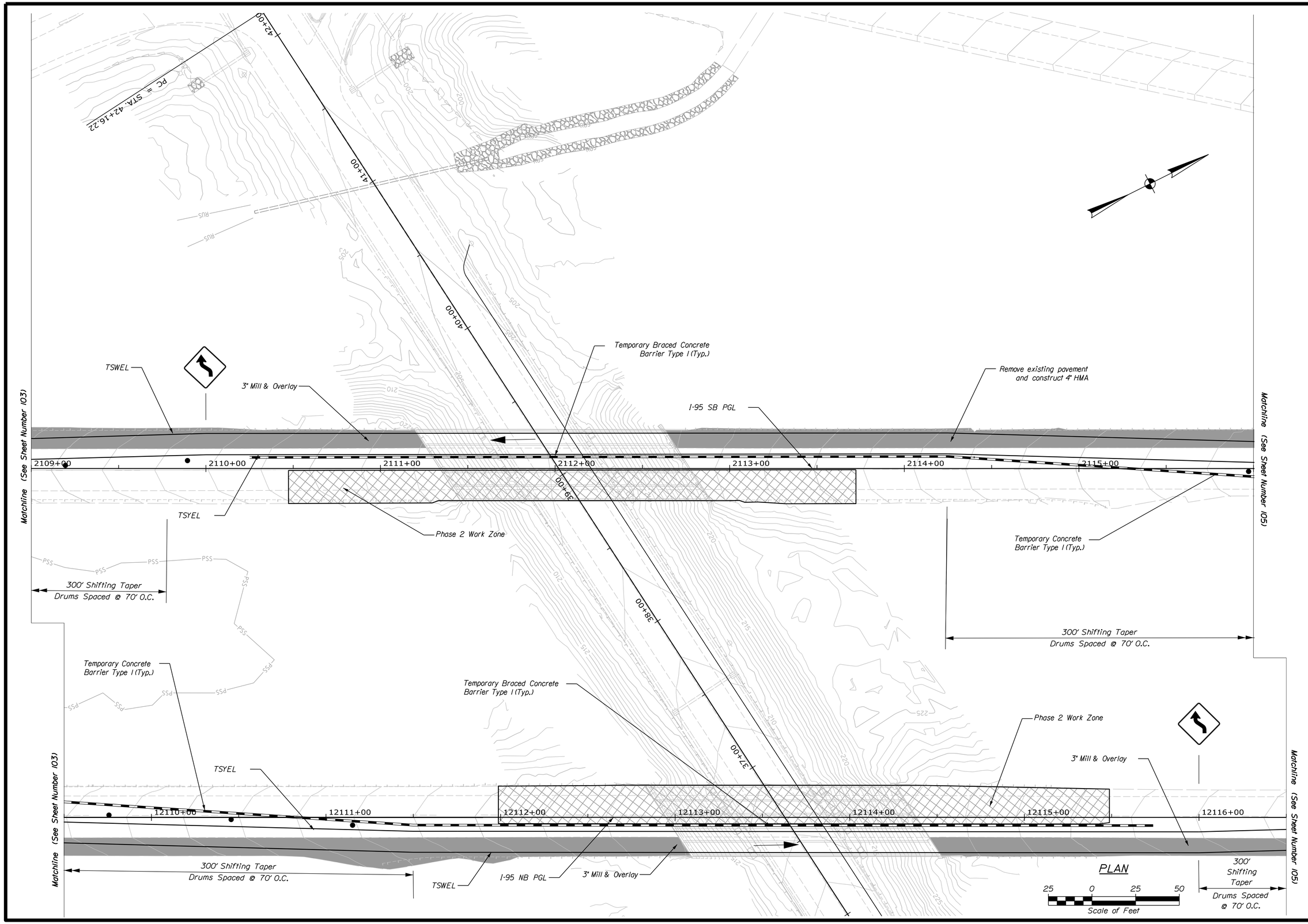

STATE OF MAINE
DEPARTMENT OF TRANSPORTATION

PROJECT NO. 2563106

WIN 25631.06, 25631.07, 25631.08, 25631.09
BRIDGE NO. 1447, 1449, 5984, 5985
BRIDGE PLANS

	BY	DATE
PROJ. MANAGER	J. BRASK	
DESIGN-DETAILED	S. LINDSLEY	E. MORRISON	06-24
CHECKED-REVIEWED	D. WHITE	B. COLBURN	06-24
DESIGN2-DETAILED2	N. EDMAN	J. FITZ	06-24
DESIGN3-DETAILED3		
REVISIONS 1		
REVISIONS 2		
REVISIONS 3		
REVISIONS 4		
FIELD CHANGES		

SIGNATURE

P.E. NUMBER

DATE

I-95 SB & NB OVER WEBB RD & SOMERSET AVE
BRIDGE NO. 1447, 1449, 5984, 5985
PITTSFIELD SOMERSET COUNTY

TRAFFIC CONTROL PLANS
PHASE 2

SHEET NUMBER
104
OF 110

Filename: ...\0XX_TCPlan_NB12.dgn Division: Username: jfitzpatrick Date:6/10/2024

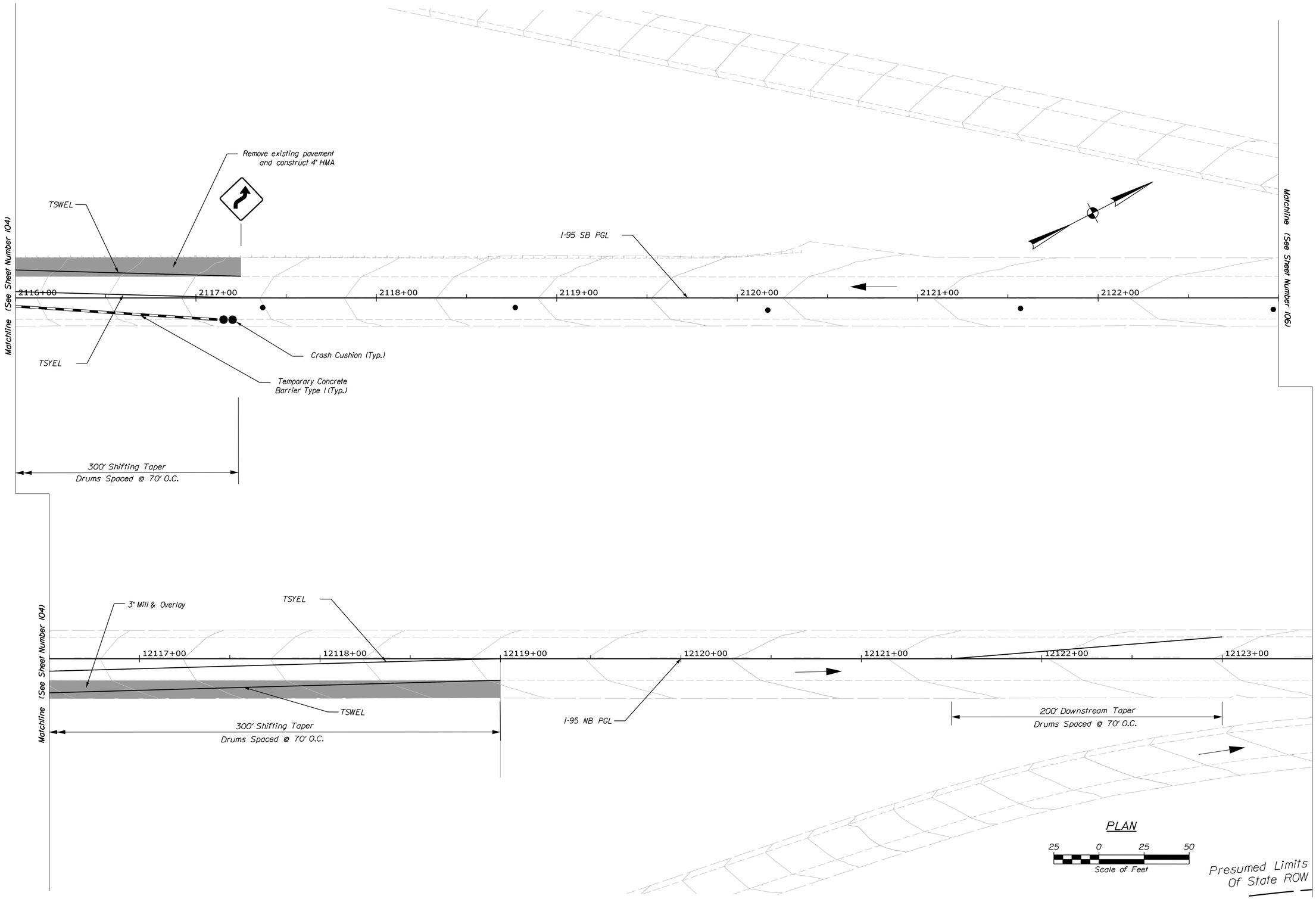

STATE OF MAINE
DEPARTMENT OF TRANSPORTATION

PROJECT NO. 2563106

WIN 25631.06, 25631.07, 25631.08, 25631.09
BRIDGE NO. 1447, 1449, 5984, 5985

BRIDGE PLANS

SIGNATURE

P.E. NUMBER

DATE

PROJ. MANAGER	J. BRASK	BY	DATE
DESIGN-DETAILED	S. LINDSLEY	E. MORRISON	06-24
CHECKED-REVIEWED	D. WHITE	B. COLBURN	06-24
DESIGN2-DETAILED2	N. EDMAN	J. FITZ	06-24
DESIGN3-DETAILED3			
REVISIONS 1			
REVISIONS 2			
REVISIONS 3			
REVISIONS 4			
FIELD CHANGES			

I-95 SB & NB OVER WEBB RD & SOMERSET AVE
BRIDGE NO. 1447, 1449, 5984, 5985
PITTSFIELD SOMERSET COUNTY

TRAFFIC CONTROL PLANS
PHASE 2

SHEET NUMBER
105
OF 110

Filename: ...\0XX_TCPlan_NB13.dgn Division: Username: jfitzpatrick Date:6/10/2024

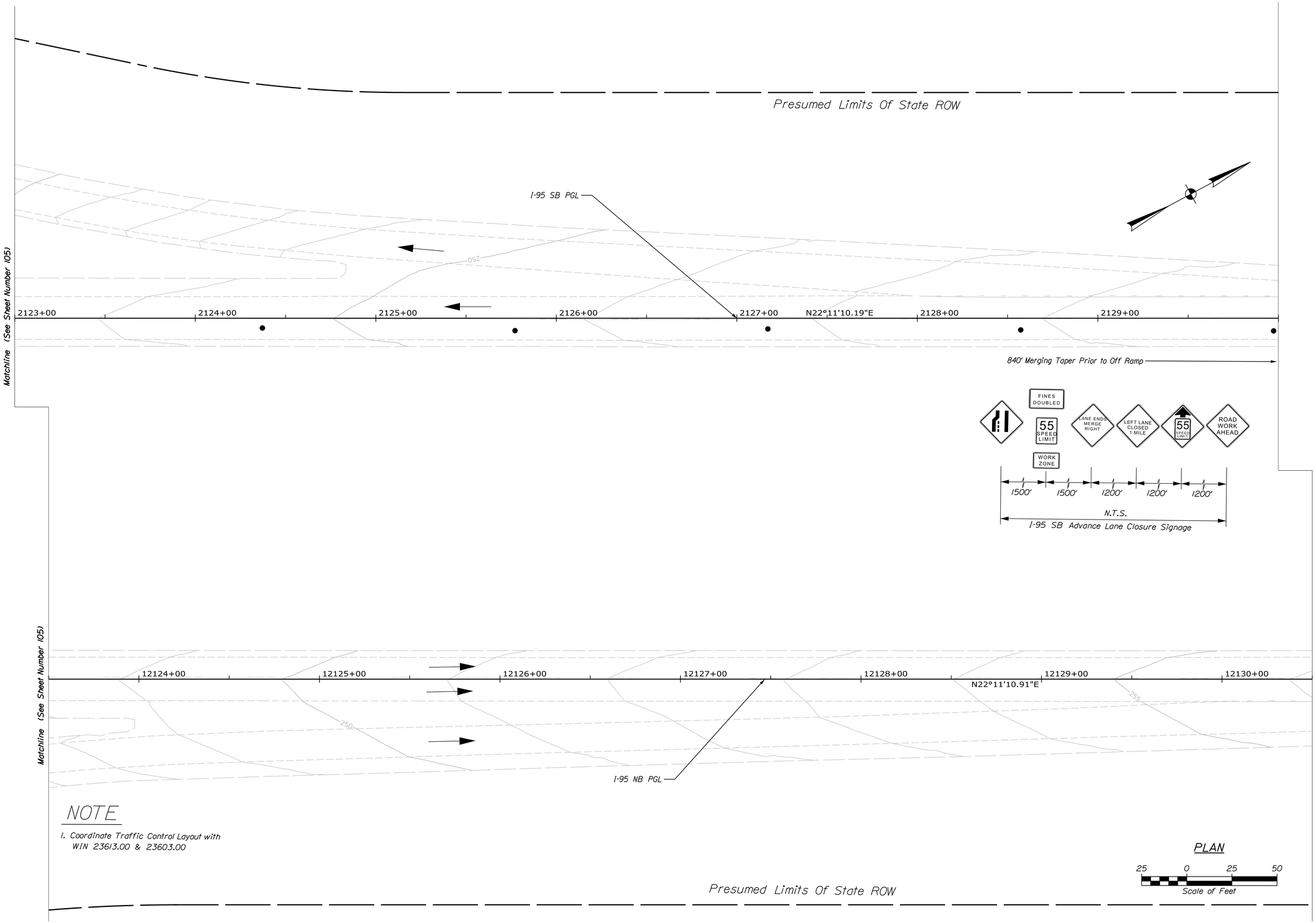

NOTE

1. Coordinate Traffic Control Layout with WIN 23613.00 & 23603.00

STATE OF MAINE
DEPARTMENT OF TRANSPORTATION

PROJECT NO. 2563106

WIN 25631.06, 25631.07, 25631.08, 25631.09
BRIDGE NO. 1447, 1449, 5984, 5985
BRIDGE PLANS

PROJ. MANAGER	J. BRASK	BY	DATE
DESIGN-DETAILED	S. LINDSLEY	E. MORRISON	06-24
CHECKED-REVIEWED	D. WHITE	B. COLBURN	06-24
DESIGN2-DETAILED2	N. EDMAN	J. FITZ	06-24
DESIGN3-DETAILED3			
REVISIONS 1			
REVISIONS 2			
REVISIONS 3			
REVISIONS 4			
FIELD CHANGES			

SIGNATURE

P.E. NUMBER

DATE

I-95 SB & NB OVER WEBB RD & SOMERSET AVE
BRIDGE NO. 1447, 1449, 5984, 5985
PITTSFIELD SOMERSET COUNTY

TRAFFIC CONTROL PLANS
PHASE 2

SHEET NUMBER
106
OF 110

Filename: ...\0XX_TCPlan_NB14.dgn Division: Username: jfitzpatrick Date:6/10/2024

LEGEND

Temporary Portable Traffic Signal

Signal Head

Video Detector

24" Stop Bar - Painted

INITIAL SIGNAL TIMINGS

	Phase 1	Phase 2	Phase 3	Phase 4	Phase 5	Phase 6	Phase 7	Phase 8	Phase 9
Min Initial		15	5			15	5		
Passage Time		--	--			--	--		
Max I		30	10			30	10		
Max II		--	--			--	--		
Yellow		3	3			3	3		
Red		30	2			30	2		
Walk / Don't Walk		--	--			--	--		
Recall		Soft	Off			Off	Off		
Detector		--	--			--	--		
Flash		Y	R			R	R		

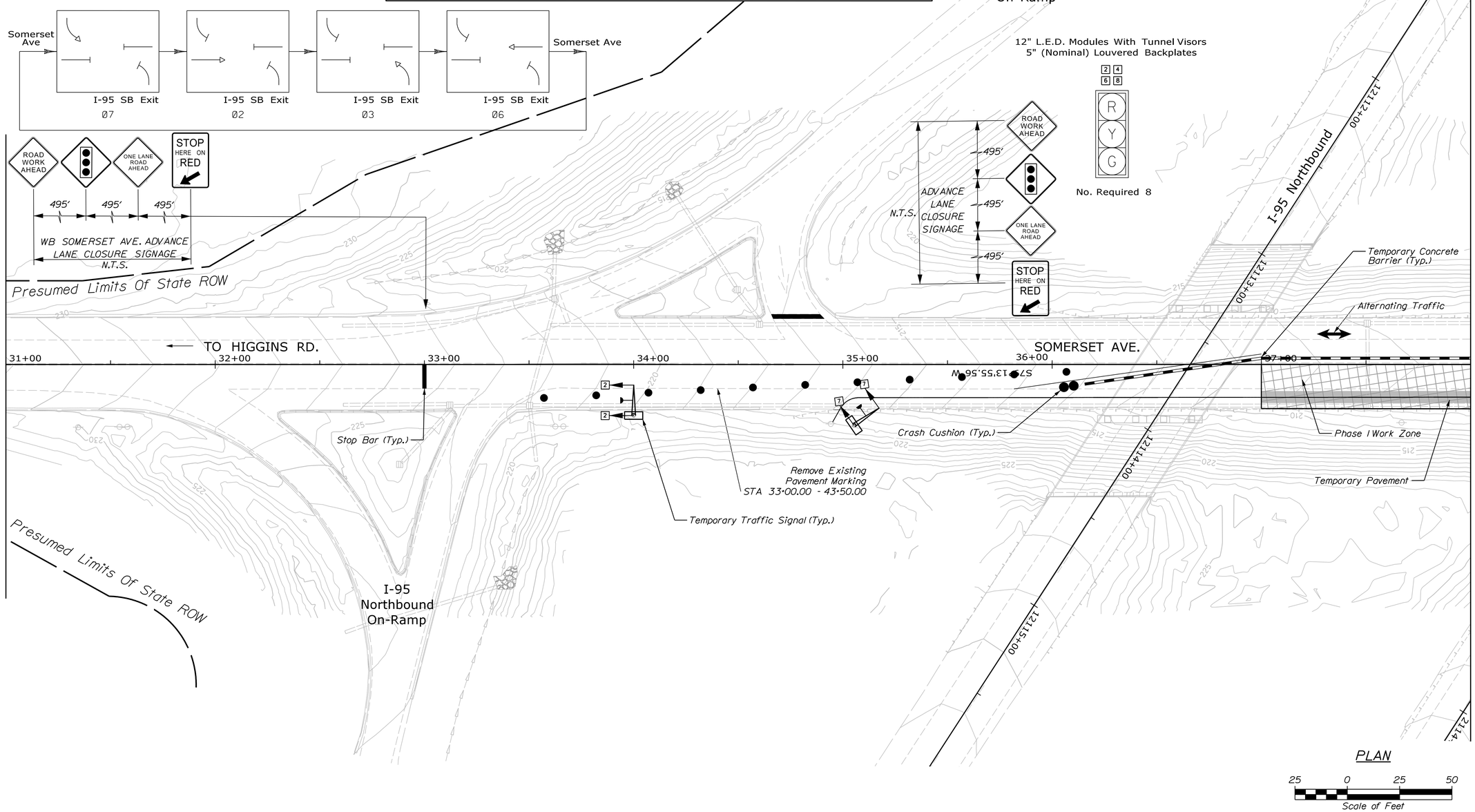

STATE OF MAINE
DEPARTMENT OF TRANSPORTATION

PROJECT NO. 2875400

WIN 28754.00

BRIDGE NO. 1447

BRIDGE PLANS

SIGNATURE

P.E. NUMBER

DATE

PROJ. MANAGER	J. BRASK	BY	DATE
DESIGN-DETAILED	S. LINDSLEY	E. MORRISON	06-24
CHECKED-REVIEWED	D. WHITE	B. COLBURN	06-24
DESIGN2-DETAILED2	N. EDMAN	J. FITZ	06-24
DESIGN3-DETAILED3			
REVISIONS 1			
REVISIONS 2			
REVISIONS 3			
REVISIONS 4			
FIELD CHANGES			

SOMERSET AVENUE LOWERING

PITTSFIELD SOMERSET COUNTY

TRAFFIC CONTROL PLANS
SOMERSET PHASE 1

SHEET NUMBER

107

OF 110

Filename: ...\0XX_TCPlan_Somerset1.dgn Division: Username: jfitzpatrick Date:6/10/2024

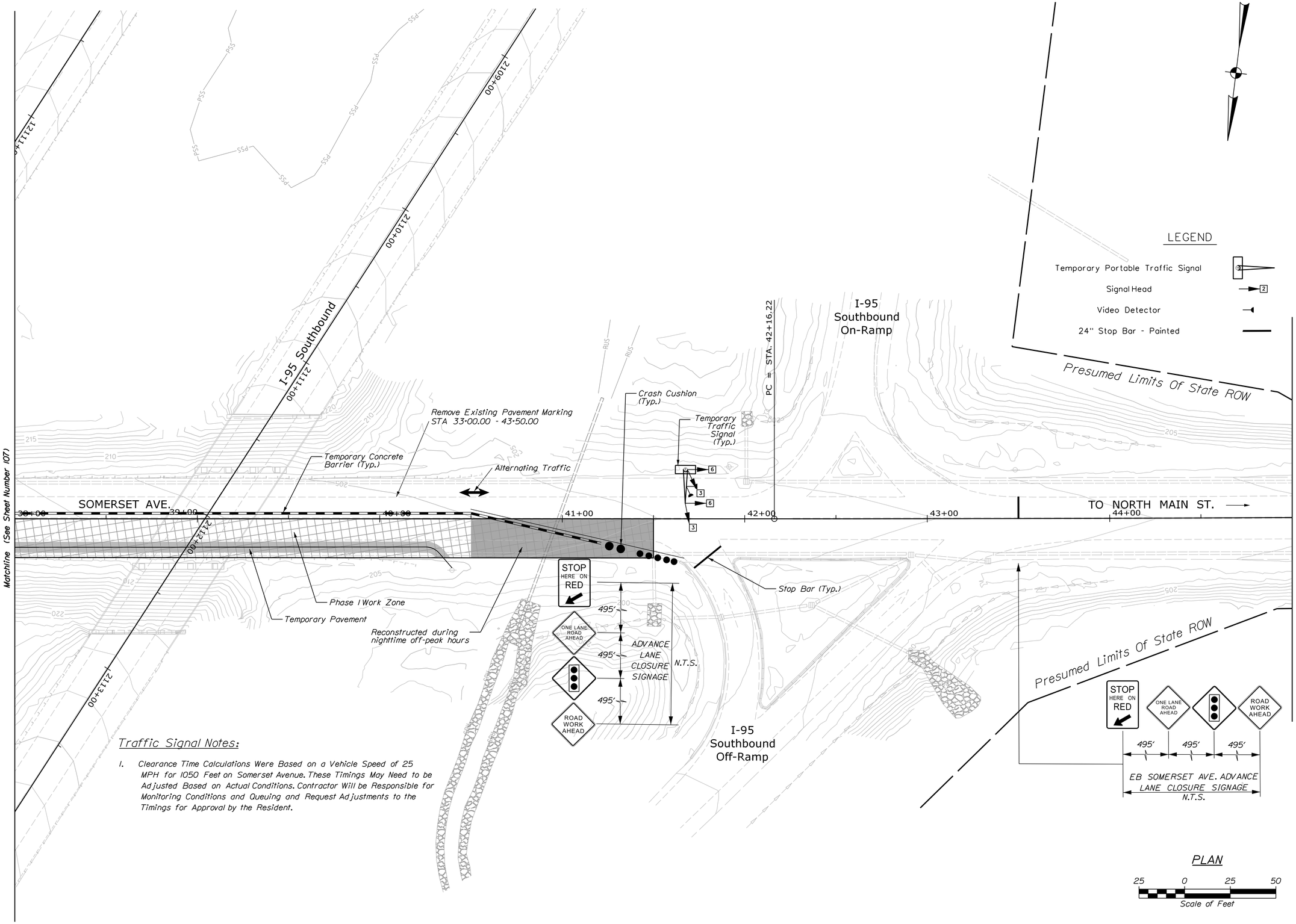

Traffic Signal Notes:

1. Clearance Time Calculations Were Based on a Vehicle Speed of 25 MPH for 1050 Feet on Somerset Avenue. These Timings May Need to be Adjusted Based on Actual Conditions. Contractor Will be Responsible for Monitoring Conditions and Queuing and Request Adjustments to the Timings for Approval by the Resident.

STATE OF MAINE
DEPARTMENT OF TRANSPORTATION

PROJECT NO. 2875400

WIN 28754.00

BRIDGE NO. 1447

BRIDGE PLANS

		BY	DATE
PROJ. MANAGER	J. BRASK		
DESIGN-DETAILED	S. LINDSLEY	E. MORRISON	06-24
CHECKED-REVIEWED	D. WHITE	B. COLBURN	06-24
DESIGN2-DETAILED2	N. EDMAN	J. FITZ	06-24
DESIGN3-DETAILED3			
REVISIONS 1			
REVISIONS 2			
REVISIONS 3			
REVISIONS 4			
FIELD CHANGES			

SIGNATURE

P.E. NUMBER

DATE

SOMERSET AVENUE LOWERING

PITTSFIELD SOMERSET COUNTY

TRAFFIC CONTROL PLANS
SOMERSET PHASE 1

SHEET NUMBER

108

OF 110

Filename: ...\0XX_TCPlan_Somerset2.dgn Division: Username: jfitzpatrick Date:6/10/2024

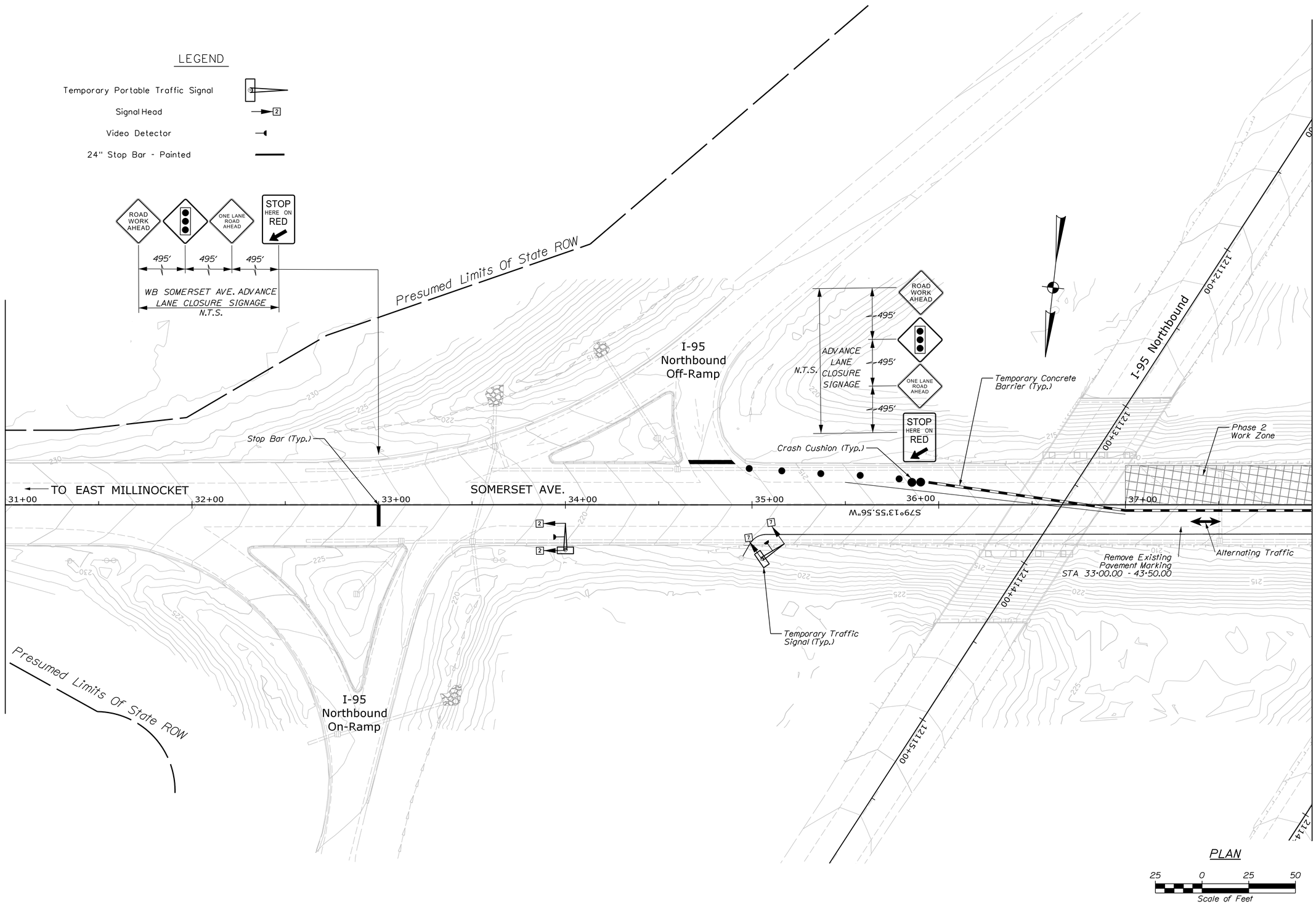

STATE OF MAINE
DEPARTMENT OF TRANSPORTATION

PROJECT NO. 2875400

WIN 28754.00

BRIDGE NO. 1447

BRIDGE PLANS

PROJ. MANAGER	J. BRASK	BY	DATE
DESIGN-DETAILED	S. LINDSLEY	E. MORRISON	06-24
CHECKED-REVIEWED	D. WHITE	B. COLBURN	06-24
DESIGN2-DETAILED2	N. EDMAN	J. FITZ	06-24
DESIGN3-DETAILED3			
REVISIONS 1			
REVISIONS 2			
REVISIONS 3			
REVISIONS 4			
FIELD CHANGES			

SIGNATURE

P.E. NUMBER

DATE

SOMERSET AVENUE LOWERING

PITTSFIELD SOMERSET COUNTY

TRAFFIC CONTROL PLANS
SOMERSET PHASE 2

SHEET NUMBER

109

OF 110

Filename: ...\0XX_TCPlan_Somerset3.dgn Division: Username: jfitzpatrick Date:6/10/2024

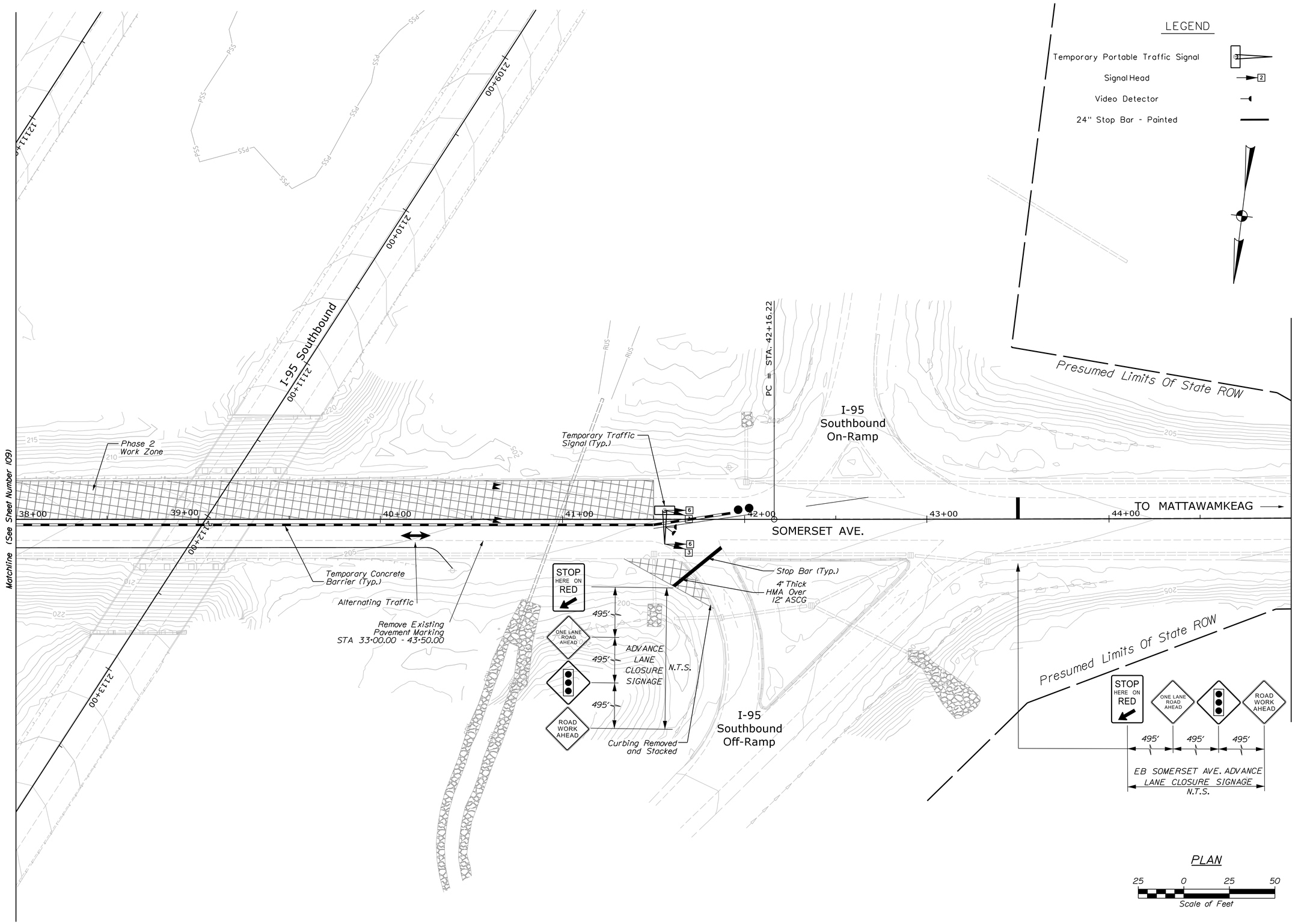

STATE OF MAINE
DEPARTMENT OF TRANSPORTATION

PROJECT NO. 2875400

WIN 28754.00

BRIDGE NO. 1447

BRIDGE PLANS

PROJ. MANAGER	J. BRASK	BY	DATE
DESIGN-DETAILED	S. LINDSLEY	E. MORRISON	06-24
CHECKED-REVIEWED	D. WHITE	B. COLBURN	06-24
DESIGN2-DETAILED2	N. EDMAN	J. FITZ	06-24
DESIGN3-DETAILED3			
REVISIONS 1			
REVISIONS 2			
REVISIONS 3			
REVISIONS 4			
FIELD CHANGES			

SIGNATURE

P.E. NUMBER

DATE

SOMERSET AVENUE LOWERING

PITTSFIELD SOMERSET COUNTY

TRAFFIC CONTROL PLANS
SOMERSET PHASE 2

SHEET NUMBER

110

OF 110

Filename: ...\OXX_TCPlan_Somerset4.dgn Division: Username: jfitzpatrick Date:6/10/2024