STATE OF MAINE
DEPARTMENT OF TRANSPORTATION

PLAN LEGEND

Town, County, State
Property Lines
R/W Lines-Existing
R/W Lines-Proposed
Culvert-Existing
Culvert Proposed
Curbing — Existing — Proposed
Type 1
Type 3
Type 5
Outline of Bodies of Water
Exposed Bedrock
Buildings
Trees — Conifer — Deciduous
Tree Line
Clearing Limit Line
Railroad

Catch Basins — Existing — Proposed
Manholes — Existing — Proposed
Proposed Underdrain
Proposed Ditch
Existing Ditch
Utility Poles — Existing — Proposed
Fire Hydrants — Existing — Proposed
Existing Water Line
Existing San. Sewer
Existing San. Sewer Manhole
Guardrail-Existing
Guardrail-Proposed
Guardrail-Cable, Other
Centerline-Existing
Centerline-Proposed
Travelway-Existing
Travelway-Proposed

Boring — HB-XXX-###
Pavement Core — PC-#
Test Pit — TP-XXX-###

Probe — P-#.#X
#.# = Depth
X = W (Weathered Rock)
R (Refusal)
NR (No Refusal)

WOOLWICH
SAGADAHOC COUNTY
US ROUTE 1
FEDERAL PROJECT NO. 2428900
PROJECT LENGTH : 0.09 MILES

INDEX OF SHEETS

Description	Sheet No.
Title Sheet	1
Typical Sections	2
Estimated Quantities & Notes	3
Plan	4

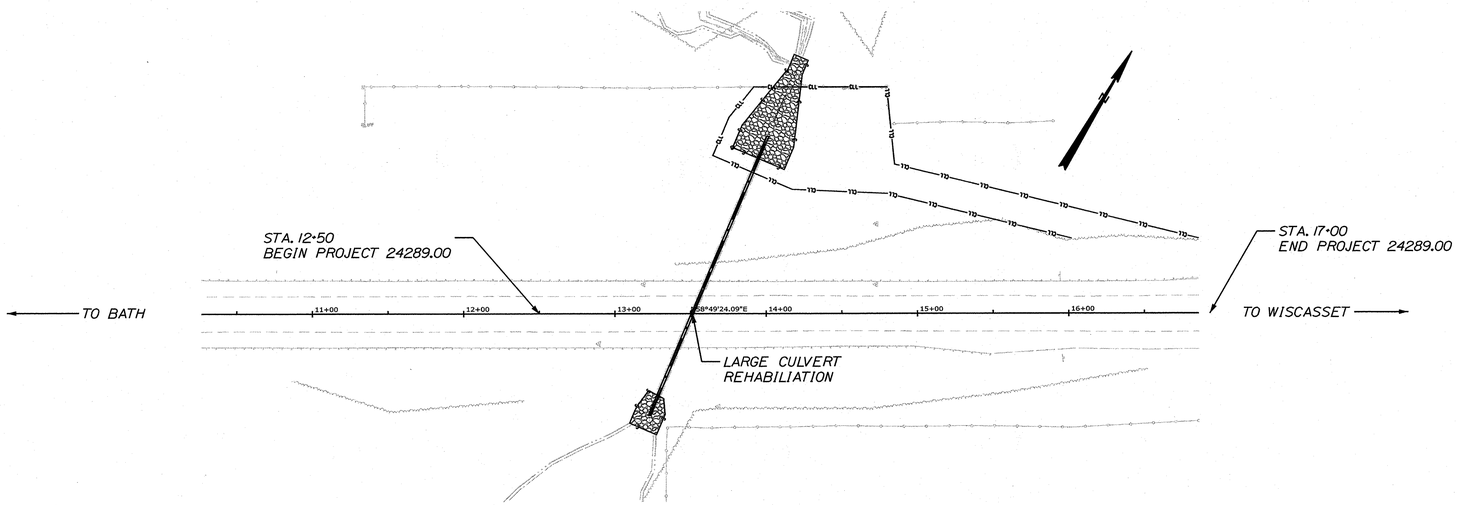

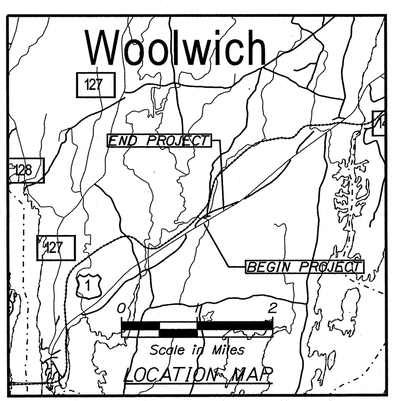

TRAFFIC DATA

Current (2021) AADT	18090
Future (2041) AADT	19860
DHV - % of AADT	10%
Design Hour Volume	1986
% Heavy Trucks (AADT)	7%
Directional Distribution (DHV)	56%
Design Speed (mph)	55
Functional Class:	Other Prin. Art.
Corridor Priority	1

LAYOUT SCALE
50 0 50 100
Scale in Feet

PROJECT LOCATION:	Large culvert (#900617) located 0.19 of a mile northeast of Shaw Road.
PROGRAM AREA:	Highway
SCOPE OF WORK:	Large Culvert Improvements

WIN 24289.00 FEDERAL PROJECT NO. 2428900

STATE OF MAINE
DEPARTMENT OF TRANSPORTATION
APPROVED — DATE
COMMISSIONER: — 4-16-21
CHIEF ENGINEER: — 4/16/2021

STATE OF MAINE — BRIAN REEVES — 13554 — LICENSED PROFESSIONAL ENGINEER
SIGNATURE — 13554
P.E. NUMBER — 3/29/21
DATE

PROJECT INFORMATION

PROGRAM	HIGHWAY
PROJECT MANAGER	DOUGLAS COOMBS
DESIGNER	JAY BAINES
CONSULTANT	
PROJECT RESIDENT	
CONTRACTOR	
PROJECT COMPLETION DATE	

WOOLWICH
US ROUTE 1

TITLE SHEET

SHEET NUMBER
1
OF 4

Filename: ...\00\HIGHWAY\MSTA\001_Title.dgn Division: HIGHWAY Username: James.Baines Date:2/2/2021

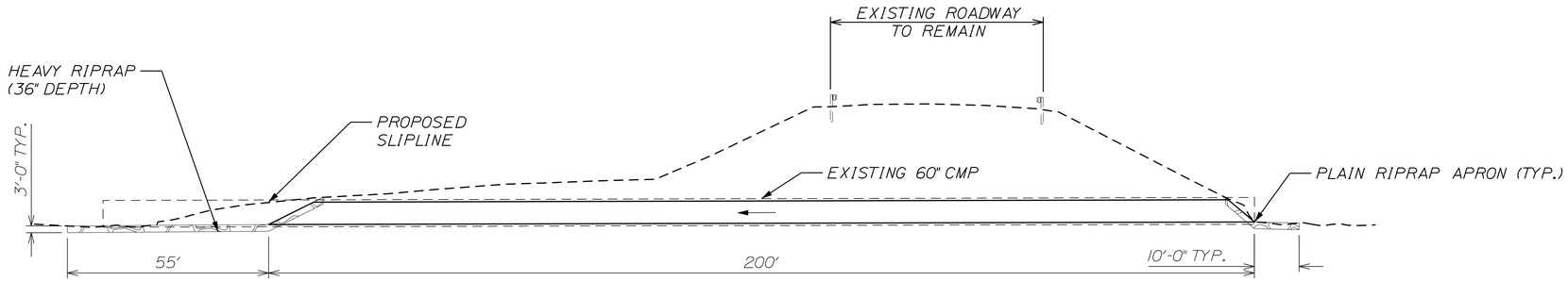

TYPICAL LONGITUDINAL SECTION

STA. 13+51.20
SKEW 23°12'03"

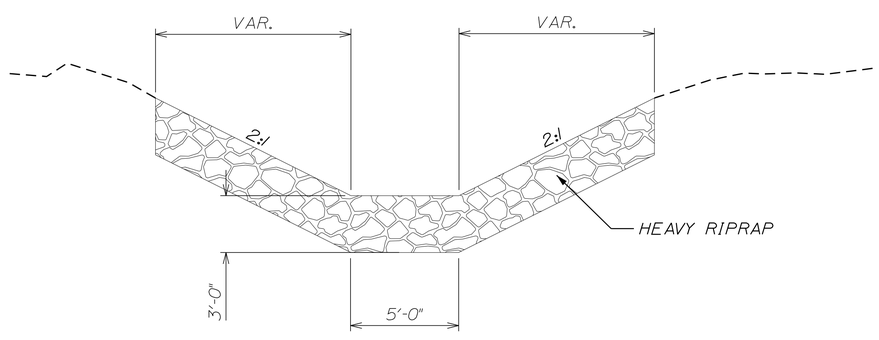

TYPICAL PIPE OUTLET
RECONSTRUCTION

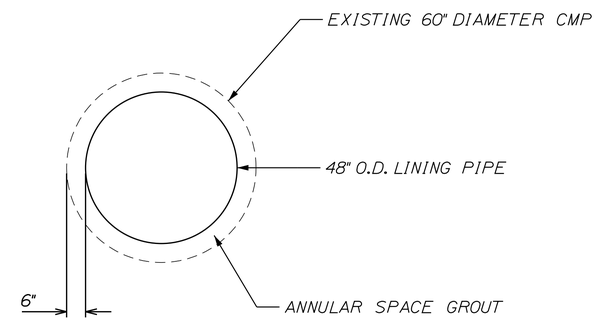

CULVERT SLIPLINING
SPECIAL DETAIL

NOT TO SCALE

STATE OF MAINE
DEPARTMENT OF TRANSPORTATION

2428900

WIN
24289.00

HIGHWAY PLANS

		BY	DATE
PROJ. MANAGER	D. COOMBS		DEC 2020
DESIGN-DETAILED	J. BAINES		
CHECKED-REVIEWED			
DESIGN2-DETAILED2			
DESIGN3-DETAILED3			
REVISIONS 1			
REVISIONS 2			
REVISIONS 3			
REVISIONS 4			
FIELD CHANGES			

SIGNATURE

P.E. NUMBER

DATE

WOOLWICH
US ROUTE 1

TYPICAL SECTIONS

SHEET NUMBER
2
OF 4

Filename: ...\HIGHWAY\MSTA\002_Typical.dgn Division: HIGHWAY Username: James.Baines Date:2/2/2021

ESTIMATED QUANTITIES			
ITEM NO.	DESCRIPTION	QUANTITY	UNIT
203.20	COMMON EXCAVATION	150	CY
304.10	ASCG - TYPE D	7	CY
403.2081	12.5 MM POLYMER MODIFIED HMA	13	T
409.15	BITUMINOUS TACK COAT - APPLIED	2	G
461.131	TEMPORARY PAVEMENT	6	T
509.201	CULVERT SLIP LINE	200	LF
511.07	COFFERDAM: UPSTREAM	1	LS
511.07	COFFERDAM: DOWNSTREAM	1	LS
606.366	GUARDRAIL, REMOVE AND RESET, TYPE 3C	50	LF
607.09	WOVEN WIRE FENCE - METAL POSTS	100	LF
610.08	PLAIN RIPRAP	30	CY
610.16	HEAVY RIPRAP	180	CY
618.14	SEEDING METHOD NUMBER 2	7	UN
618.143	SPECIAL SEEDING	3	UN
619.12	MULCH (STRAW ONLY)	10	UN
619.14	EROSION CONTROL MIX	80	CY
620.58	EROSION CONTROL GEOTEXTILE	230	SY
629.05	HAND LABOR, STRAIGHT TIME	10	HR
631.10	AIR COMPRESSOR (INC OPERATOR)	10	HR
631.11	AIR TOOL (INC OPERATOR)	10	HR
631.12	ALL-PURPOSE EXCAVATOR (INC OPERATOR)	20	HR
631.172	TRUCK-LARGE (INC OPERATOR)	40	HR
631.18	CHAIN SAW RENTAL (INC OPERATOR)	10	HR
631.19	CULVERT CLEANER (INC OPERATOR)	4	HR
652.33	DRUM	20	EA
652.34	CONE	30	EA
652.35	CONSTRUCTION SIGNS	250	SF
652.36	MAINTENANCE OF TRAFFIC CONTROL DEVICES	30	CD
652.38	FLAGGER	200	HR
656.75	TEMP SOIL EROSION & WATER POLLUTION CNRL	1	LS
659.10	MOBILIZATION	1	LS

GENERAL NOTES:

1 ALL CLEARING SHALL BE CONSIDERED INCIDENTAL TO THE CONTRACT AND NO SEPARATE PAYMENT WILL BE MADE. THE ACTUAL LINES FOR CLEARING SHALL BE ESTABLISHED IN THE FIELD BY THE CONTRACTOR AS INDICATED ON THE PLANS AND APPROVED BY THE RESIDENT.

2 THE CONTRACTOR SHALL PLAN AND CONDUCT THEIR WORK ACCORDINGLY SO THAT UPON FINAL COMPLETION OF THE PROJECT THERE IS NO DROP-OFF FROM THE EDGE OF SHOULDER PAVEMENT.

3 ALL WASTE MATERIAL NOT USED ON THE PROJECT SHALL BE DISPOSED OF OFF THE PROJECT IN ACCEPTABLE WASTE AREAS REVIEWED BY THE RESIDENT. GRADING, SEEDING AND MULCHING OF WASTE AREAS SHALL BE CONSIDERED INCIDENTAL.

4 INLETS AND OUTLETS OF ALL CULVERTS SHALL BE RIPRAPPED UNLESS OTHERWISE NOTED ON THE PLANS OR DIRECTED BY THE RESIDENT.

5 ANY DAMAGE TO THE SLOPES CAUSED BY THE CONTRACTOR'S EQUIPMENT, PERSONNEL, OR OPERATION SHALL BE REPAIRED TO THE SATISFACTION OF THE RESIDENT. ALL WORK, EQUIPMENT, AND MATERIALS REQUIRED TO MAKE REPAIRS SHALL BE AT THE CONTRACTOR'S EXPENSE.

6 NO SEPARATE PAYMENT FOR SUPERINTENDENT OR FOREMAN WILL BE MADE FOR THE SUPERVISION OF EQUIPMENT AND LAYOUT OF WORK BEING PAID FOR UNDER THE EQUIPMENT RENTAL ITEMS.

CONSTRUCTION NOTES:

1. THE EXISTING PIPE SHALL BE CUT IN AREAS WHERE THE EXISTING INVERT CONFLICTS WITH THE PROPOSED PIPE ELEVATION. PAYMENT FOR CUTTING NECESSARY TO ACHIEVE A MINIMUM CLEARANCE OF 1' WILL BE CONSIDERED INCIDENTAL TO THE CONTRACT.

2. RIPRAP (PLAIN AND HEAVY) SHALL BE PLACED SO AS TO NOT DAMAGE THE LINER.

3. ANY DAMAGE TO THE LINER SHALL BE REPAIRED TO THE SATISFACTION OF THE RESIDENT AT THE CONTRACTOR'S EXPENSE.

4. THE CONTRACTOR SHALL CLEAN THE EXISTING PIPE PRIOR TO INSTALLATION OF THE PROPOSED LINER. THIS WORK SHALL ALSO INCLUDE REMOVAL OF ANY STREAM MATERIAL DEEMED UNSUITIBLE BY THE RESIDENT. PIPE CLEANING WILL BE CONSIDERED INCIDENTAL TO THE CONTRACT. MUCK EXCAVATION WILL BE PAID UNDER ITEM 203.20 - COMMON EXCAVATION.

5. REMOVAL OF EXISITING PIPE AND RIPRAP OF DISTURBED AREAS MAY BE DONE WITHIN EXISTING MAINTAINANCE EASEMENT. ALL SLIPLINE WORK AND ASSOCIATED SLOPE WORK AROUND THE OUTLET SHALL BE DONE WITHIN THE RIGHT OF WAY.

6. ANY DISTURBANCE TO WETLAND AREAS NOT SHOWN ON THE PLANS SHALL BE REPAIRED TO PRECONSTRUCTION CONDITIONS. PAYMENT WILL BE CONSIDERED INCIDENTAL TO THE CONTRACT.

7. THE CONTRACTOR SHALL PERFORM FIELD MEASUREMENTS BEFORE FABRICATION TO ENSURE THAT THE SLIPLINE WILL FIT GIVEN EXISTING CONDITIONS. NO PAYMENT WILL BE MADE FOR PIPE THAT DOES NOT FIT BECAUSE OF FAILURE TO VERIFY EXISTING CONDITIONS.

8. METHOD #2 AND SPECIAL SEEDING MAY BE DONE BY HAND.

9. ITEM 619.12 MULCH SHALL BE STRAW PER 717.04 (B).

10. ALL COMMON EXCAVATION SHALL BE REMOVED FROM THE SITE AS DIRECTED BY THE RESIDENT.

11. ALL PIPE EXCAVATION WILL BE INCIDENTAL TO THE CONTRACT.

12. ITEMS #304.10 AGGREGATE SUBBASE COURSE-GRAVEL AND PAVEMENT ITEMS (#403.2081, #403.213, #409.15, #461.131)ARE FOR TRENCH PATCHING OF ROUTE 1 FOR BYPASS PUMP LINE FOR COFFERDAMS.

13. ALL SUITABLE TYPE-D GRAVEL EXCAVATED AS PART OF BYPASS PUMP INSTALLATION WILL BE REUSED.

14. ITEM #606.366 GUARDRAIL, REMOVE AND RESET, TYPE 3 FOR ACCESS TO SITE, 25' RIGHT AND LEFT ONLY. ANY ADDITIONAL REMOVAL AND RESETTING OF GUARDRAIL SHALL BE INCIDENTAL TO CONTRACT.

15. ITEM #607.09 WOVEN WIRE FENCE - METAL POSTS IS TO REPLACE C.O.A. FENCE AT PIPE OUTLET OR AS DIRECTED BY RESIDENT. REMOVEAL OF EXISTING FENCE SHALL INCIDENTAL TO THE CONTACT.

STATE OF MAINE
DEPARTMENT OF TRANSPORTATION

2428900

WIN
24289.00

HIGHWAY PLANS

PROJ. MANAGER	D. COOMBS	BY	DATE
DESIGN-DETAILED	J. BAINES		DEC 2020
CHECKED-REVIEWED			
DESIGN2-DETAILED2			
DESIGN3-DETAILED3			
REVISIONS 1			
REVISIONS 2			
REVISIONS 3			
REVISIONS 4			
FIELD CHANGES			

SIGNATURE

P.E. NUMBER

DATE

WOOLWICH
US ROUTE 1

ESTIMATED QUANTITIES &
GENERAL NOTES

SHEET NUMBER
3
OF 4

Filename: ...\HIGHWAY\MSTA\003_Estimate.dgn Division: HIGHWAY Username: James.Baines Date:4/16/2021

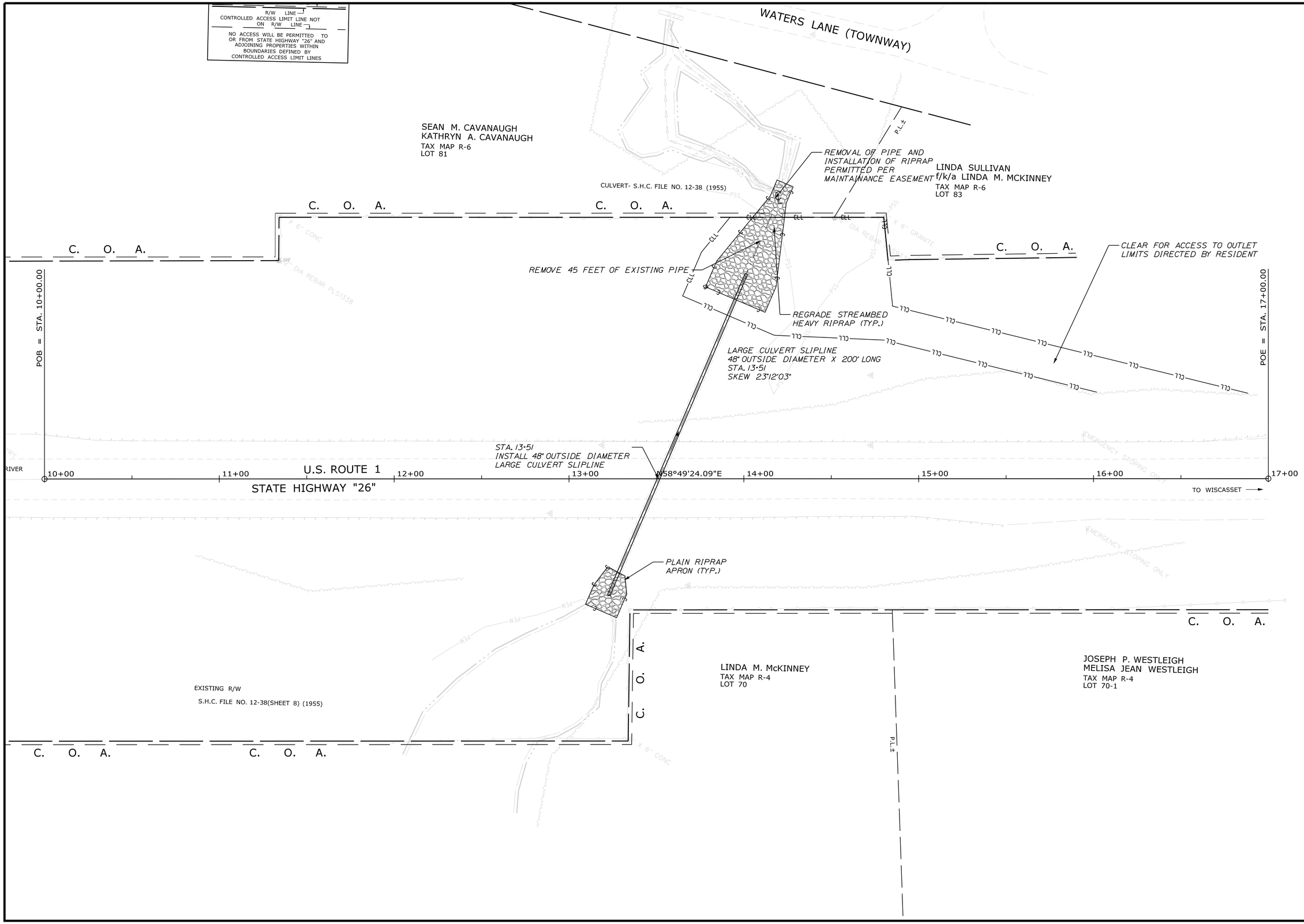

STATE OF MAINE
DEPARTMENT OF TRANSPORTATION

2428900

WIN 24289.00

HIGHWAY PLANS

	BY	DATE
PROJ. MANAGER	D. COOMBS	
DESIGN-DETAILED	J. BAINES	DEC 2020
CHECKED-REVIEWED		
DESIGN2-DETAILED2		
DESIGN3-DETAILED3		
REVISIONS 1		
REVISIONS 2		
REVISIONS 3		
REVISIONS 4		
FIELD CHANGES		

SIGNATURE

P.E. NUMBER

DATE

WOOLWICH
US ROUTE 1

PLANS

SHEET NUMBER

4

OF 4

Filename: ...\HIGHWAY\MSTA\004_HDPlan1.dgn Division: HIGHWAY Username: James.Baines Date:2/2/2021