STATE OF MAINE
DEPARTMENT OF TRANSPORTATION

PLAN LEGEND

Town, County, State
Property Lines
R/W Lines-Existing
R/W Lines-Proposed
Culvert-Existing
Culvert Proposed
Curbing — Existing — Proposed
Type 1
Type 3
Type 5
Outline of Bodies of Water
Exposed Bedrock
Buildings
Trees — Conifer — Deciduous
Tree Line
Clearing Limit Line
Railroad

Catch Basins — Existing ■ Proposed
Manholes — Existing ● Proposed
Proposed Underdrain
Proposed Ditch
Existing Ditch
Utility Poles — Existing ♦ Proposed
Fire Hydrants — Existing ◈ Proposed
Existing Water Line
Existing San. Sewer
Existing San. Sewer Manhole
Guardrail-Existing
Guardrail-Proposed
Guardrail-Cable, Other
Centerline-Existing
Centerline-Proposed — 10+00
Travelway-Existing
Travelway-Proposed

Boring — HB-XXX-###
Pavement Core — PC-#
Test Pit — TP-XXX-###

Probe — P-#.#X
#.# = Depth
X = W (Weathered Rock)
R (Refusal)
NR (No Refusal)

NORTH YARMOUTH

CUMBERLAND COUNTY

ROUTE 115
MAPLE HILL BRIDGE

STATE PROJECT NO. 23693.00

PROJECT LENGTH : 0.05 MILES
BRIDGE NO. 6639

INDEX OF SHEETS

Description	Sheet No.
Title Sheet	1
Typical Sections	2
Estimated Quantities and General Notes	3
Special Details - Culvert	4-5
Special Details - Stream Realignment	6-7
Boring Plans	8
Detour Plan	8a
Plan/Profile	9
Cross Sections	10-16
Right of Way Map	17

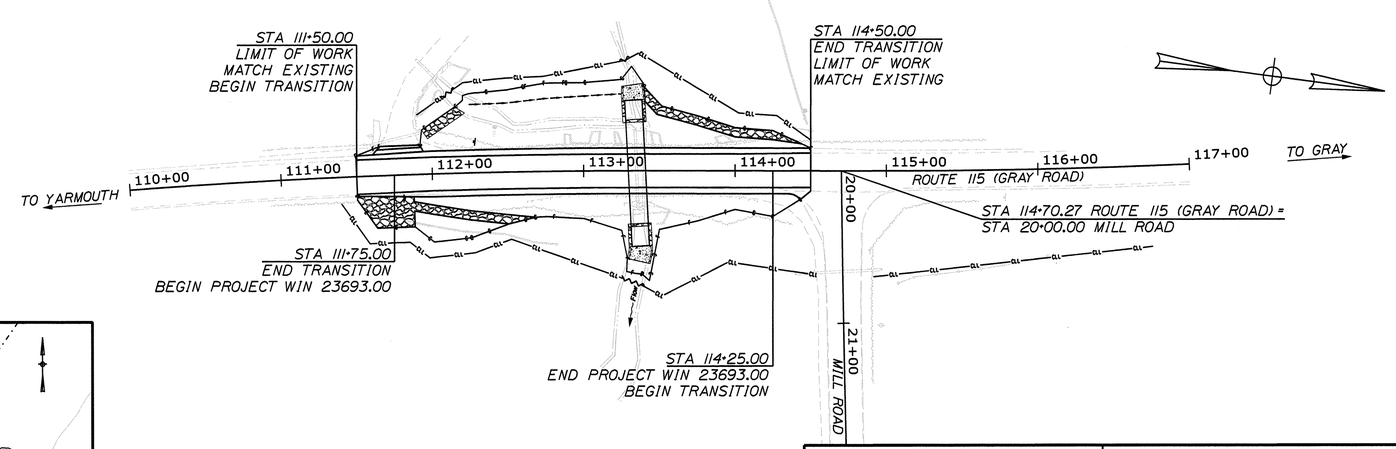

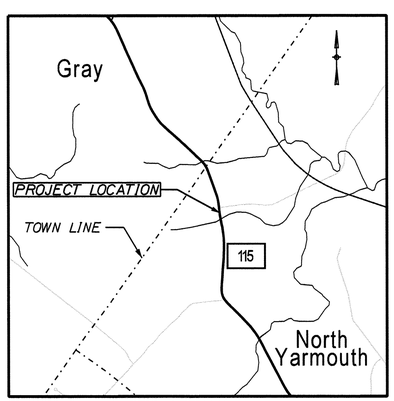

LOCATION MAP

0.5 0 0.5 1
Scale in Miles

TRAFFIC DATA

	ROUTE 115
Current (2022) AADT	3170
Future (2034) AADT	3410
Future (2042) AADT	3540
DHV - % of AADT	11%
Design Hour Volume	389
% Heavy Trucks (AADT)	8%
% Heavy Trucks (DHV)	3%
Directional Distribution (DHV)	53%
18 kip Equivalent P 2.0	123
18 kip Equivalent P 2.5	117
Design Speed (mph)	40
Functional Class	Major Collector
Highway Corridor Priority	3

LAYOUT SCALE

50 0 50 100
Scale of Feet

PROJECT LOCATION	The project is located in the Town of North Yarmouth along Route 115, approximately 0.03 miles south of the intersection with Mill Road.
PROGRAM AREA	Highway Program
SCOPE OF WORK	Large Culvert Replacement

WIN 23693.00

GORRILL PALMER
Relationships. Responsiveness. Results.
www.gorrillpalmer.com
207.772.2515

STATE OF MAINE
DEPARTMENT OF TRANSPORTATION
APPROVED — DATE
COMMISSIONER: — 11-21-23
CHIEF ENGINEER: — 11-21-2023

STATE OF MAINE — DONALD G. ETTINGER, JR. — No. 9244 — LICENSED PROFESSIONAL ENGINEER

SIGNATURE 9244
P.E. NUMBER
11-09-2023
DATE

PROJECT INFORMATION

PROGRAM	HIGHWAY
PROJECT MANAGER	L. HAMILTON
DESIGNER	D. ETTINGER
CONSULTANT	GORRILL PALMER
PROJECT RESIDENT	
CONTRACTOR	
PROJECT COMPLETION DATE	

NORTH YARMOUTH
ROUTE 115

TITLE SHEET

SHEET NUMBER
1
OF 17

Filename: ...\00\Highway\001_Title.dgn Division: HIGHWAY Username: Jeff.Fitzmaurice Date:11/9/2023
U:\3571-North Yarmouth Route 115 Culvert\Z - CAD\00\Highway\001_Title.dgn

SHLD = SHOULDER

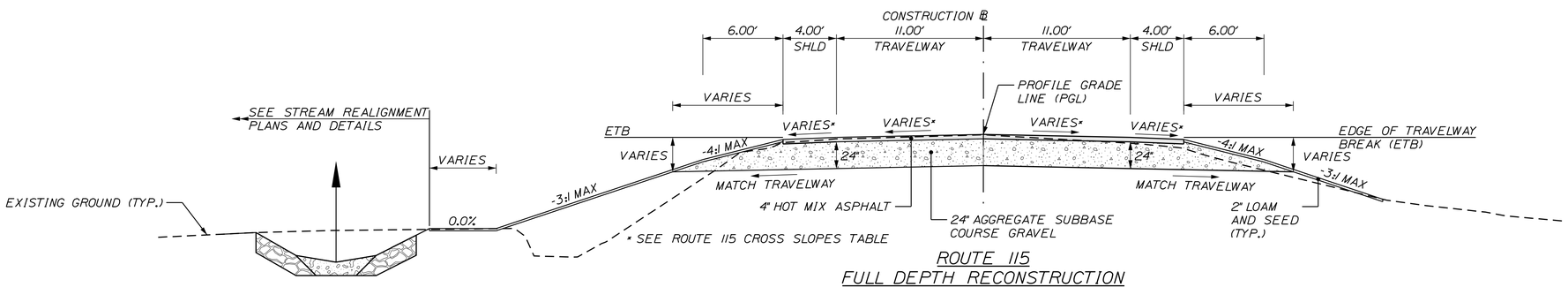

ROUTE 115
FULL DEPTH RECONSTRUCTION AND STREAM RELOCATION

AGGREGATE SUBBASE COURSE GRAVEL		
LEFT SHOULDER A.S.C.G = VARIES CY/100LF	11 FT. TRAVEL LANES A.S.C.G = 163 CY/100LF	RIGHT SHOULDER A.S.C.G = VARIES CY/100LF
STATION TO STATION	STATION TO STATION	STATION TO STATION
111+75 TO 114+25 LT.	111+75 TO 114+25	111+75 TO 114+25 RT.

ROUTE 115 CROSS SLOPES TABLE				
LEFT SHOULDER	LEFT TRAVELWAY	STATION	RIGHT TRAVELWAY	RIGHT SHOULDER
MATCH EXISTING				
-9.9%	-3.5%	111+50	-6.6%	-9.1%
-7.9%	-3.0%	111+75	-5.4%	-7.4%
-5.9%	-3.0%	112+00	-4.2%	-5.7%
-4.0%	-3.0%	112+25	-3.0%	-4.0%
		TO		
-4.0%	-3.0%	114+00	-3.0%	-4.0%
-5.1%	-3.0%	114+25	-4.1%	-5.0%
-6.3%	-2.4%	114+50	-5.1%	-6.2%
MATCH EXISTING				

NOTES:

1. THE PAVEMENT, BASE AND SUBBASE DEPTHS AS SHOWN ON THE PLANS ARE INTENDED TO BE NOMINAL.
2. WHEN SUPERELEVATION EXCEEDS THE SLOPE OF THE LOW SIDE SHOULDER, THE LOW SIDE SHOULDERS PAVEMENT SHALL HAVE THE SAME CROSS SLOPE AS THE TRAVELWAY.
3. CROWNS FOR BOTH NORMAL AND SUPERELEVATION SECTIONS FOR ALL COURSES OF SUBBASE AND PAVEMENT SHALL BE STRAIGHT.
4. THE GRAVEL QUANTITY IS BASED ON A 2" LOAM OR DIRTY BORROW DEPTH.
5. THE ALGEBRAIC DIFFERENCE BETWEEN SHOULDER AND TRAVELWAY CROSS SLOPES "ROLLOVER" SHALL NOT EXCEED 8%.
6. THE STATIONING SHOWN UNDER EACH TYPICAL IS APPROXIMATE.

NOT TO SCALE

GORRILL PALMER
Relationships. Responsiveness. Results.
www.gorrillpalmer.com
207.772.2515

STATE OF MAINE
DEPARTMENT OF TRANSPORTATION

WIN 23693.00

HIGHWAY PLANS

		BY	DATE
PROJ. MANAGER	L. HAMILTON		
DESIGN-DETAILED	T. LANDRY	T. WARREN	11\23
CHECKED-REVIEWED	D. ETTINGER		
DESIGN2-DETAILED2			
DESIGN3-DETAILED3			
REVISIONS 1			
REVISIONS 2			
REVISIONS 3			
REVISIONS 4			
FIELD CHANGES			

SIGNATURE

P.E. NUMBER

DATE

NORTH YARMOUTH
ROUTE 115

TYPICAL SECTIONS

SHEET NUMBER
2
OF 17

Filename: ...\00\Highway\002_Typ01.dgn Division: HIGHWAY Username: Jeff.Fitzmaurice Date:11/9/2023
U:\3571-North Yarmouth Route 115 Culvert\Z - CAD\00\Highway\002_Typ01.dgn

	ESTIMATED QUANTITIES		
ITEM NO.	DESCRIPTION	QUANTITY	UNIT
203.20	COMMON EXCAVATION	CY	910
203.24	COMMON BORROW	CY	50
203.25	GRANULAR BORROW	CY	230
203.33	SPECIAL FILL	CY	105
304.10	AGGREGATE SUBBASE COURSE - GRAVEL	CY	840
403.208	HOT MIX ASPHALT, 12.5 mm NOMINAL MAXIMUM SIZE	T	107
403.213	HOT MIX ASPHALT, 12.5 mm NOMINAL MAXIMUM SIZE (BASE AND INTERMEDIATE BASE COURSE)	T	175
409.15	BITUMINOUS TACK COAT, APPLIED	G	31
* 511.07	COFFERDAM: UPSTREAM #1	LS	1
* 511.07	COFFERDAM: UPSTREAM #2	LS	1
* 511.07	COFFERDAM: DOWNSTREAM	LS	1
603.4071	11'-5" x 7'-3" STEEL STRUCTURAL PIPE ARCH - POLYMER COATED	LF	96
610.08	PLAIN RIPRAP	CY	200
610.212	STREAMBED ROCK FEATURES	CY	15
610.213	VOID FILLED RIPRAP	CY	70
613.319	EROSION CONTROL BLANKET	SY	500
615.07	LOAM	CY	62
618.14	SEEDING METHOD NUMBER 2	UN	11
618.146	SEEDING HYDROMULCH GROWTH MEDIUM	UN	10
618.147	WETLAND SEEDING	UN	10
619.12	MULCH	UN	11
619.14	EROSION CONTROL MIX	CY	50
620.58	EROSION CONTROL GEOTEXTILE	SY	240
* 621.026	EVERGREEN TREES 3' - 4' GROUP C B&B/CONT.	EA	8
* 621.111	SMALL DECIDUOUS TREE (3 FOOT - 4 FOOT) GROUP B	EA	8
* 621.178	MED. DECID. TREE 6' - 8' GROUP A CONT.	EA	10
* 621.179	MED. DECID. TREE 6' - 8' GR. B CONT.	EA	10
* 621.184	MED. DECIC. TREE 8' - 10' GR. A CONT.	EA	10
* 621.185	MED. DECIC. TREE 8' - 10' GR. B CONT.	EA	6
* 621.195	MED. DECID. TREES 1¾" - 2" GROUP A B&B/CONT	EA	12
* 621.54	DECIDUOUS SHRUB 18" - 24" GR. A CONT.	EA	60
* 621.546	DECIDUOUS SHRUB 2' - 3' GR. A CONT.	EA	48
* 621.71	HERBACEOUS PERENNIALS GR. A 1 GALLON CONT.	EA	120
627.733	4" WHITE OR YELLOW PAINTED PAVEMENT MARKING LINE	LF	900
* 629.05	HAND LABOR, STRAIGHT TIME	HR	10
* 631.10	AIR COMPRESSOR (INCLUDING OPERATOR)	HR	10
* 631.11	AIR TOOL (INCLUDING OPERATOR)	HR	10
* 631.12	ALL PURPOSE EXCAVATOR (INCLUDING OPERATOR)	HR	10
* 631.172	TRUCK - LARGE (INCLUDING OPERATOR)	HR	10
* 631.18	CHAIN SAW RENTAL (INCLUDING OPERATOR)	HR	10
* 631.32	CULVERT CLEANER (INCLUDING OPERATORS)	HR	10
* 639.19	FIELD OFFICE, TYPE B	EA	1
652.312	TYPE III BARRICADES	EA	6
* 652.33	DRUM	EA	50
* 652.34	CONE	EA	50
* 652.35	CONSTRUCTION SIGNS	SF	600
* 652.36	MAINTENANCE OF TRAFFIC CONTROL DEVICES	CD	45
* 652.38	FLAGGERS	HR	200
652.41	PORTABLE-CHANGEABLE MESSAGE SIGN	EA	4
* 656.75	TEMPORARY SOIL EROSION AND WATER POLLUTION CONTROL	LS	1
* 659.10	MOBILIZATION	LS	1

* UNDETERMINED LOCATIONS

GENERAL NOTES

1. PAVEMENT THICKNESSES SHOWN ON THE TYPICAL SECTIONS ARE INTENDED TO BE NOMINAL.

2. CLEARING LIMITS SHALL BE 10 FEET BEYOND AND PARALLEL TO THE CONSTRUCTION SLOPE LINES OR AS SHOWN ON THE PLANS UNLESS OTHERWISE AUTHORIZED BY THE RESIDENT.

3. ALL CLEARING SHALL BE CONSIDERED INCIDENTAL TO THE CONTRACT AND NO SEPARATE PAYMENT WILL BE MADE. THE ACTUAL LINES FOR CLEARING SHALL BE ESTABLISHED IN THE FIELD BY THE CONTRACTOR AS INDICATED ON THE PLANS AND APPROVED BY THE RESIDENT.

4. THE CLEARING AND SELECTIVE CLEARING AND THINNING LINES SHOWN ON THE PLANS ARE FOR ESTIMATING PURPOSES ONLY. THE ACTUAL LINES FOR CLEARING AND THINNING SHALL BE ESTABLISHED IN THE FIELD BY THE CONTRACTOR AND APPROVED BY THE RESIDENT.

5. GRUBBING IN FILL AREAS HAS BEEN SHOWN ON THE CROSS SECTIONS AND THE QUANTITIES NOTED. THESE LIMITS ARE APPROXIMATE AND HAVE BEEN USED FOR ESTIMATING PURPOSES ONLY. ACTUAL GRUBBING LIMITS MAY VARY BASED ON FIELD CONDITIONS AS DIRECTED BY THE RESIDENT.

6. THE CONTRACTOR SHALL PLAN AND CONDUCT WORK SO THAT UPON COMPLETION OF THE PROJECT THERE IS NO DROP-OFF FROM THE EDGE OF THE SHOULDER PAVEMENT.

7. ALL WASTE MATERIAL NOT USED ON THE PROJECT SHALL BE DISPOSED OF OFF THE PROJECT IN ACCEPTABLE WASTE AREAS REVIEWED BY THE RESIDENT. GRADING, SEEDING AND MULCHING OF WASTE AREAS SHALL BE CONSIDERED INCIDENTAL.

8. REQUIRED DITCH PROTECTION SHOWN ON THE PLANS OR IN THE CONSTRUCTION NOTES IS FOR ESTIMATING PURPOSES ONLY. THE ACTUAL TYPE AND LOCATION OF DITCH PROTECTION MAY BE ALTERED BY THE RESIDENT.

9. GRANULAR BORROW USED TO BACKFILL MUCK EXCAVATION OR IN LOW WET AREAS TO 1 FOOT ABOVE WATER LEVEL OR OLD GROUND SHALL MEET REQUIREMENTS FOR GRANULAR BORROW MATERIAL FOR UNDERWATER BACKFILL AS SPECIFIED IN STANDARD SPECIFICATIONS ITEM 703.19, GRANULAR BORROW.

10. EXISTING INSLOPES IN PROPOSED FILL AREAS SHALL BE BENCHED BY EXCAVATING STEPS OF SUFFICIENT WIDTH TO PERMIT PLACING AND COMPACTING THE FILL MATERIAL ALONG WITH THE MATERIAL REMOVED.

11. WHEN SUPERELEVATION EXCEEDS THE SLOPE OF THE LOW-SIDE SHOULDER, THE LOW-SIDE SHOULDER WILL HAVE SAME SLOPE AS THE TRAVELWAY.

12. GRAVEL ENTRANCES SHALL BE CONSTRUCTED WITH 14 INCHES OF AGGREGATE SUBBASE COURSE GRAVEL OR 11 INCHES OF AGGREGATE SUBBASE COURSE GRAVEL AND 3 INCHES OF UNTREATED AGGREGATE SURFACE COURSE UNLESS OTHERWISE NOTED IN THE PLANS OR DIRECTED BY THE RESIDENT.

13. A 3-FOOT PAVED LIP SHALL BE PLACED AT ALL UNPAVED ENTRANCES UNLESS OTHERWISE NOTED IN THE PLANS OR DIRECTED BY THE RESIDENT.

14. CROSS SLOPES FOR NORMAL AND SUPERELEVATED SECTIONS WILL BE STRAIGHT UNLESS OTHERWISE DIRECTED BY THE DEPARTMENT.

15. THE ALGEBRAIC DIFFERENCE BETWEEN TRAVELWAY AND SHOULDER CROSS SLOPE SHALL NOT EXCEED 8 PERCENT.

16. PRIOR TO SURFACE PAVING, EXISTING CULVERTS TO REMAIN SHALL BE CLEANED AS DIRECTED BY THE RESIDENT. PAYMENT WILL BE MADE UNDER STANDARD SPECIFICATION ITEM 631.32, CULVERT CLEANER (INCLUDING OPERATOR).

17. NO EXISTING DRAINAGE SHALL BE ABANDONED, REMOVED OR PLUGGED WITHOUT PRIOR APPROVAL OF THE RESIDENT.

18. INLETS AND OUTLETS OF ALL CULVERTS SHALL BE RIPRAPPED UNLESS OTHERWISE NOTED ON THE PLANS OR DIRECTED BY THE RESIDENT.

19. ALL EXISTING GUARDRAIL REMOVED AND NOT REUSED ON THE PROJECT WILL BECOME THE PROPERTY OF THE CONTRACTOR. REMOVAL AND DISPOSAL OF EXISTING GUARDRAIL SHALL BE INCIDENTAL TO ITEM 203.20 - COMMON EXCAVATION.

20. LOAM HAS BEEN ESTIMATED FOR DISTURBED LAWN AREAS. ACTUAL PLACEMENT OF THE LOAM SHALL BE AS NOTED ON THE PLANS OR DESIGNATED BY THE RESIDENT.

21. UNLESS OTHERWISE NOTED SEEDING METHOD NO. 1 SHALL BE UTILIZED ON ALL LAWNS AND DEVELOPED AREAS; SEEDING METHOD NO. 2 SHALL BE UTILIZED ON ALL OTHER AREAS.

22. LOAM SHALL BE PLACED TO A NOMINAL DEPTH OF 4 INCHES IN LAWN AREAS AND 2 INCHES IN ALL OTHER AREAS UNLESS OTHERWISE NOTED OR DIRECTED.

23. THE CONTRACTOR WILL BE RESPONSIBLE FOR MAINTAINING ALL EXISTING MAILBOXES TO ENSURE THAT THE MAIL WILL BE DELIVERABLE. PAYMENT FOR THIS WORK WILL BE CONSIDERED INCIDENTAL TO THE CONTRACT.

24. THE CONTRACTOR WILL BE RESPONSIBLE FOR MAINTAINING ALL EXISTING OPERATIONAL BUSINESS DIRECTIONAL SIGNS (OBDS) TO ENSURE THAT THEY ARE VISIBLE TO THE TRAVELING PUBLIC. PAYMENT FOR THIS WORK WILL BE CONSIDERED INCIDENTAL TO THE CONTRACT.

25. ANY DAMAGE TO THE SLOPES CAUSED BY THE CONTRACTOR'S EQUIPMENT, PERSONNEL, OR OPERATION SHALL BE REPAIRED TO THE SATISFACTION OF THE RESIDENT. ALL WORK, EQUIPMENT, AND MATERIALS REQUIRED TO MAKE REPAIRS SHALL BE AT THE CONTRACTOR'S EXPENSE.

26. GEOTECHNICAL INFORMATION FURNISHED OR REFERRED TO IN THE BID DOCUMENTS IS FOR THE USE OF THE BIDDERS. NO ASSURANCE IS GIVEN THAT THE INFORMATION OR INTERPRETATIONS WILL BE REPRESENTATIVE OF THE ACTUAL SUBSURFACE CONDITIONS THROUGHOUT THE CONSTRUCTION SITE. MAINEDOT WILL NOT BE RESPONSIBLE FOR ANY INTERPRETATIONS OR CONCLUSIONS DRAWN FROM THE GEOTECHNICAL INFORMATION. THE BORING LOGS PROVIDED IN THE BID DOCUMENTS (IF ANY) PRESENT FACTUAL AND INTERPRETIVE SUBSURFACE INFORMATION COLLECTED AT DISCRETE LOCATIONS. DATA PROVIDED MAY NOT BE REPRESENTATIVE OF THE SUBSURFACE CONDITIONS BETWEEN BORING LOCATIONS.

27. AREAS ON THE PROJECT REQUIRING FILL WILL COME FROM SUITABLE SITES SUCH AS EXCAVATION, DITCH AND INSLOPE OR EQUIPMENT RENTAL AREAS.

28. ESTIMATED QUANTITIES FOR REQUIRED STRUCTURAL EARTH EXCAVATION, DRAINAGE AND MINOR STRUCTURES ARE INFORMATIONAL ONLY AND REPRESENT THE APPROXIMATE MINIMUM QUANTITY REQUIRED TO INSTALL DRAINAGE STRUCTURES. ADDITIONAL EXCAVATION FOR THE CONTRACTOR'S CONVENIENCE OR TO COMPLY WITH BACKSLOPING REQUIREMENTS WILL NOT BE PAID FOR DIRECTLY BUT WILL BE CONSIDERED INCIDENTAL TO THE RELATED DRAINAGE ITEMS.

29. NO SEPARATE PAYMENT FOR SUPERINTENDENT OR FOREMAN WILL BE MADE FOR THE SUPERVISION OF EQUIPMENT AND LAYOUT OF WORK BEING PAID FOR UNDER THE EQUIPMENT RENTAL ITEMS.

30. "UNDETERMINED LOCATIONS" SHALL BE DETERMINED BY THE RESIDENT.

31. FINAL STRIPING FOR THE PROJECT SHALL BE DONE BY THE CONTRACTOR PER THE STRIPING LAYOUT IN THE CONTRACT DOCUMENTS OR AS PROVIDED BY THE DEPARTMENT. PAYMENT SHALL BE MADE UNDER APPROPRIATE CONTRACT ITEMS.

32. THE CONTRACTOR WILL PLACE APPROPRIATELY-MARKED STAKES AT THE FOLLOWING LOCATIONS ON THE PROJECT: STRIPING PATTERN CHANGES, CROSS-SLOPE CHANGES, AND EVERY 500 FEET FOR STATIONING. THE CONTRACTOR WILL PAINT EVERY FULL STATION (100 FEET) ON THE EXISTING ROADWAY AND WILL TRANSFER THE PAINTED STATIONING THROUGH ALL INTERMEDIATE LIFTS (NOT SURFACE). APPROPRIATELY-SIZED STRIPING PATTERN CHANGES WILL BE PAINTED ON SURFACE. STATIONING CONTROL MUST BE PLACED BEFORE WORK CAN COMMENCE. CROSS-SLOPE AND STRIPING CHANGE CONTROLS MUST BE PLACED BEFORE PAVING CAN COMMENCE.

33. ALL WORK SHALL BE DONE IN ACCORDANCE WITH MAINE DEPARTMENT OF TRANSPORTATION BEST MANAGEMENT PRACTICES FOR EROSION AND SEDIMENT CONTROL (LATEST EDITION).

34. ALL INSLOPE AND DITCHES IN CUT AREAS SHALL BE GRADED AS SHOWN ON THE TYPICALS OR FLATTER, OR AS DIRECTED BY THE RESIDENT.

35. DRIVEWAY FILL SIDE SLOPES SHALL BE THE SAME AS THE FILL SIDE SLOPES WITHOUT GUARDRAIL UNLESS OTHERWISE NOTED ON THE PLANS.

36. RELOCATION OF EXISTING ROADSIDE SIGNS SHALL BE INCIDENTAL TO ITEM 203.20 COMMON EXCAVATION.

37. REMOVAL OF THE EXISTING CMP CULVERTS SHALL BE CONSIDERED INCIDENTAL TO ITEM 203.20 COMMON EXCAVATION.

38. THE PROJECT GEOTECHNICAL REPORT TITLED "GEOTECHNICAL DESIGN REPORT FOR THE CONSTRUCTION OF MAPLE HILL BRIDGE", SOILS REPORT 2023-06, APRIL 7, 2023 CAN BE ACCESSED AT THE MAINEDOT WEBSITE http://www.maine.gov/mdot/contractors/.

39. PAVEMENT REQUIRED FOR THE DRIVEWAY APRON LOCATED AT 111+75, LT. SHALL BE PAID AS PART OF ITEM 403.208 HOT MIX ASPHALT, 12.5 MM NOMINAL MAXIMUM SIZE.

GORRILL PALMER
Relationships. Responsiveness. Results.
www.gorrillpalmer.com
207.772.2515

STATE OF MAINE
DEPARTMENT OF TRANSPORTATION

WIN 23693.00

HIGHWAY PLANS

		BY	DATE
PROJ. MANAGER	L. HAMILTON		
DESIGN-DETAILED	T. LANDRY	T. WARREN	11\23
CHECKED-REVIEWED	D. ETTINGER		11\23
DESIGN2-DETAILED2			
DESIGN3-DETAILED3			
REVISIONS 1			
REVISIONS 2			
REVISIONS 3			
REVISIONS 4			
FIELD CHANGES			

SIGNATURE

P.E. NUMBER

DATE

NORTH YARMOUTH
ROUTE 115

ESTIMATED QUANTITIES
& GENERAL NOTES

SHEET NUMBER
3
OF 17

U:\3571-North Yarmouth Route 115 Culvert\Z - CAD\00\Highway\003_EstQuant&GenNotes.dgn
Filename: ...\003_EstQuant&GenNotes.dgn Division: HIGHWAY Username: Jeff.Fitzmaurice Date:11/9/2023

SP = SPECIAL PROVISION

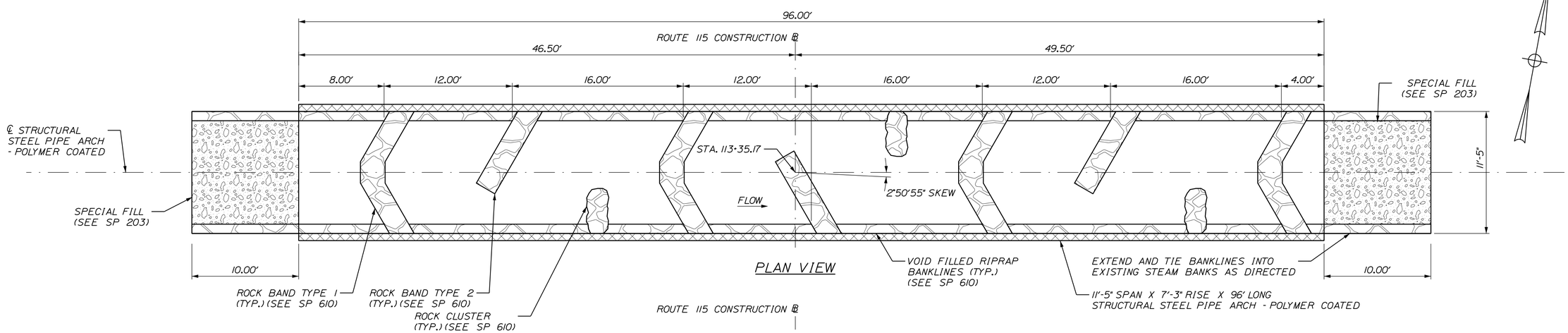

PLAN VIEW

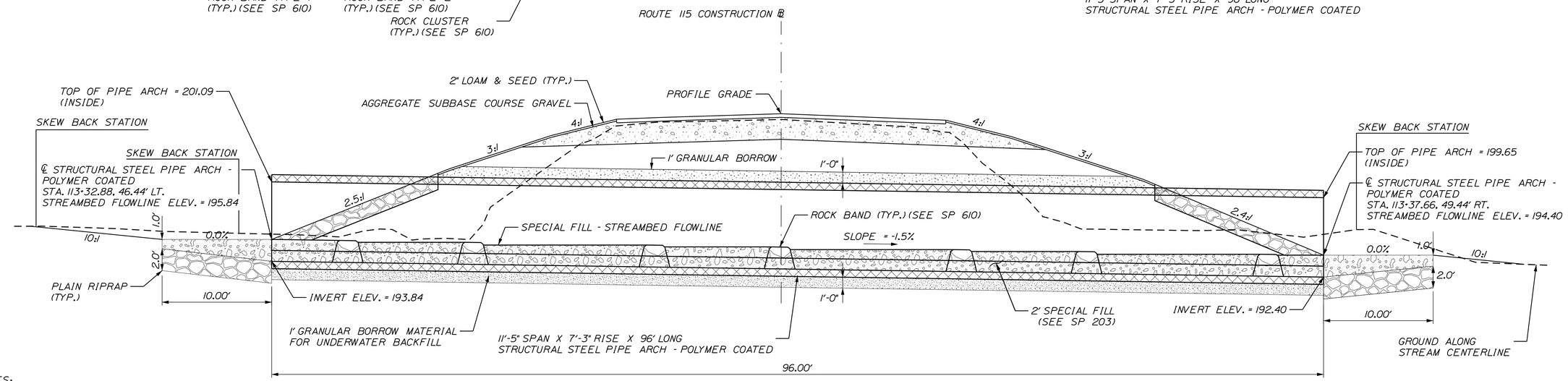

TRANSVERSE SECTION (ALONG CULVERT CENTERLINE)

NOTES:

1. THE STRUCTURAL STEEL PIPE ARCH - POLYMER COATED SHALL BE BEDDED ON A 1-FOOT LAYER OF COMPACTED GRANULAR BORROW MATERIAL MEETING THE REQUIREMENTS FOR UNDERWATER BACKFILL.
2. COFFERDAMS ARE TO BE PLACED AT BOTH THE DOWNSTREAM AND UPSTREAM ENDS OF THE CULVERT TO ALLOW CONSTRUCTION OF THE CULVERT IN THE DRY.
3. RIPRAP WILL BE USED TO INSLOPE AROUND THE STRUCTURAL STEEL PIPE ARCH - POLYMER COATED ENDS AT BOTH THE INLET AND OUTLET. SEE PLAN AND PROFILE FOR LOCATIONS.
4. INLET AND OUTLET GRADING SHALL BE COORDINATED WITH THE MAINEDOT HYDROLOGY SECTION. THE CONTRACTOR SHALL GIVE THE RESIDENT A MINIMUM OF 48 HOURS NOTICE BEFORE INLET OR OUTLET GRADING MAY BEGIN. ROCK EXCAVATION, RIPRAP, AND SPECIAL FILL WILL BE PAID FOR UNDER THE APPROPRIATE ITEMS.
5. THE STEEL THICKNESS OF THE STRUCTURAL STEEL PIPE ARCH - POLYMER COATED SHALL BE DETERMINED BASED ON THE REQUIREMENTS OF STANDARD SPECIFICATION SECTION 603.
6. CONSTRUCTION, HANDLING, AND ASSEMBLY OF THE STRUCTURAL STEEL PIPE ARCH - POLYMER COATED SHALL BE IN ACCORDANCE WITH STANDARD SPECIFICATION 603 AND THE MANUFACTURERS SPECIFICATIONS AS APPLICABLE.

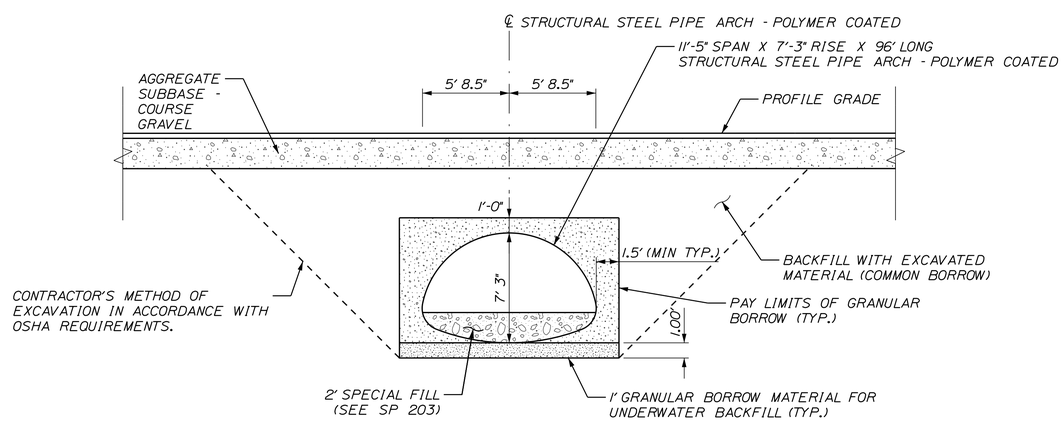

TYPICAL SECTION

NOT TO SCALE

GORRILL PALMER
Relationships. Responsiveness. Results.
www.gorrillpalmer.com
207.772.2515

STATE OF MAINE
DEPARTMENT OF TRANSPORTATION

WIN 23693.00

HIGHWAY PLANS

PROJ. MANAGER	L. HAMILTON	BY	DATE
DESIGN-DETAILED	T. LANDRY	T. WARREN	11\23
CHECKED-REVIEWED	D. ETTINGER		11\23
DESIGN2-DETAILED2			
DESIGN3-DETAILED3			
REVISIONS 1			
REVISIONS 2			
REVISIONS 3			
REVISIONS 4			
FIELD CHANGES			

SIGNATURE

P.E. NUMBER

DATE

NORTH YARMOUTH
ROUTE 115

SPECIAL DETAILS - CULVERT

SHEET NUMBER
4
OF 17

Filename: ...\Highway\004_Culvert\Detail.dgn Division: HIGHWAY Username: Jeff.Fitzmaurice Date:11/9/2023

U:\3571-North Yarmouth Route 115 Culvert\Z - CAD\00\Highway\004_Culvert\Detail.dgn

SP = SPECIAL PROVISION

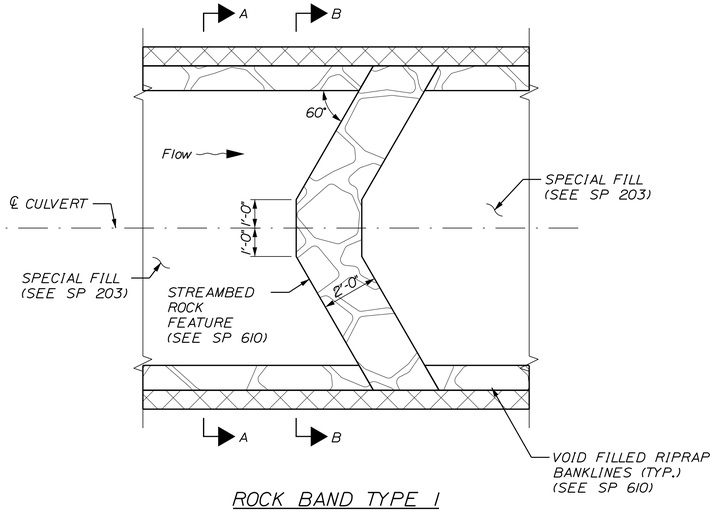

ROCK BAND TYPE 1 DETAIL

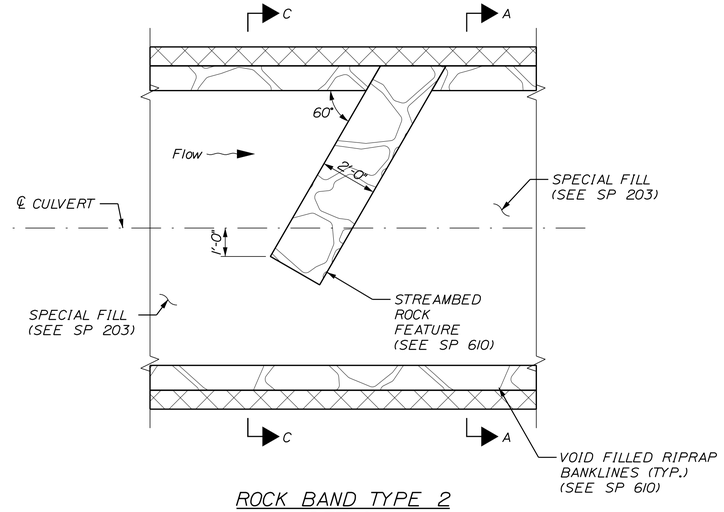

ROCK BAND TYPE 2 DETAIL

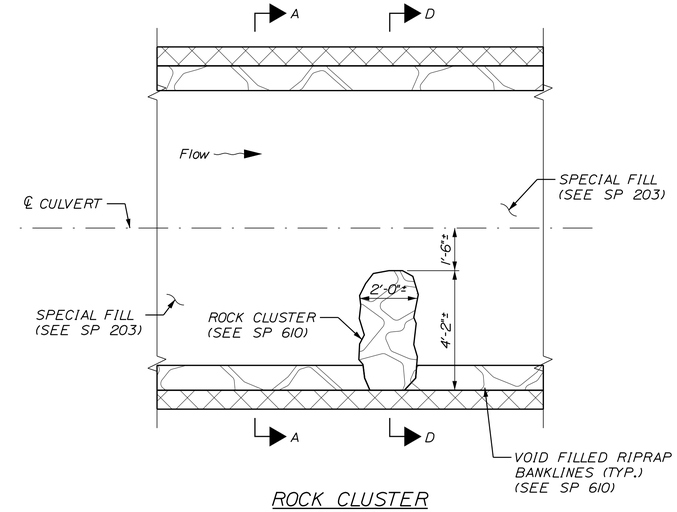

ROCK CLUSTER DETAIL

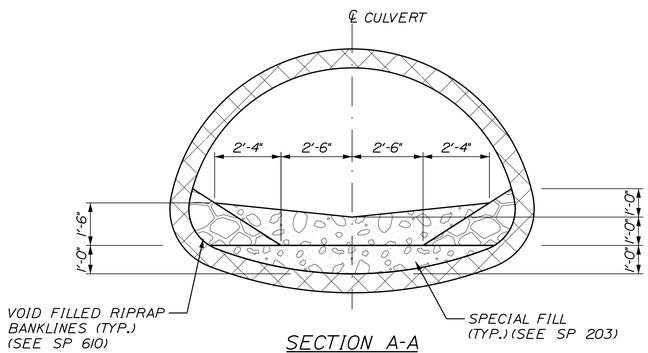

SECTION A-A
TYPICAL STREAM

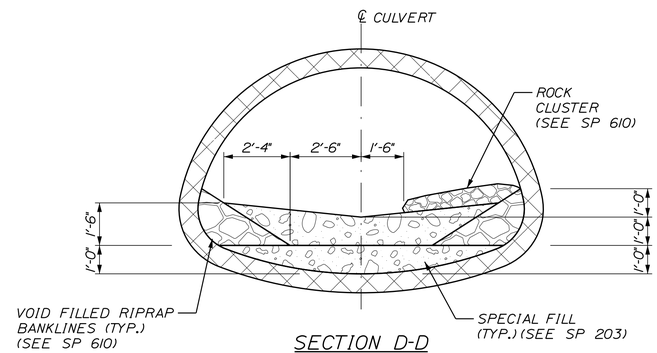

SECTION D-D
TYPICAL STREAM
WITH ROCK CLUSTER

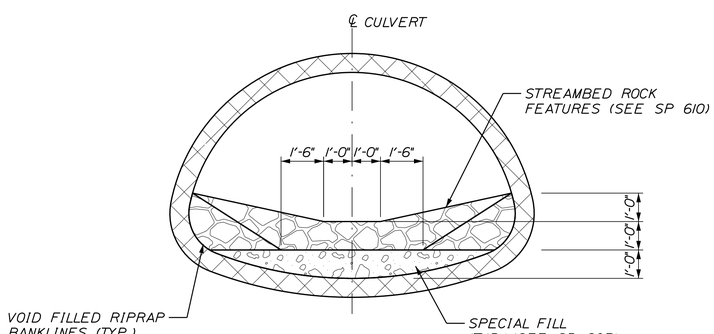

SECTION B-B
ROCK BAND TYPE 1

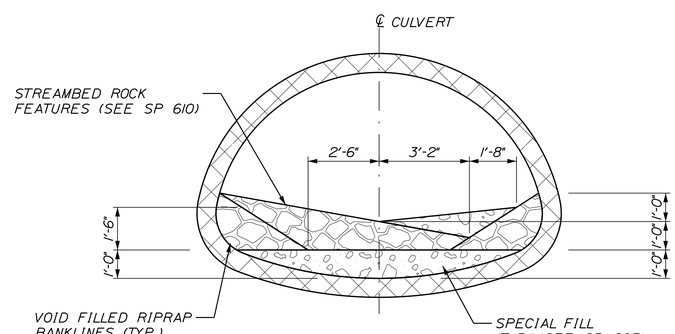

SECTION C-C
ROCK BAND TYPE 2

NOT TO SCALE

GORRILL PALMER
Relationships. Responsiveness. Results.
www.gorrillpalmer.com
207.772.2515

STATE OF MAINE
DEPARTMENT OF TRANSPORTATION

WIN 23693.00

HIGHWAY PLANS

		BY	DATE
PROJ. MANAGER	L. HAMILTON		
DESIGN-DETAILED	T. LANDRY	T. WARREN	11\23
CHECKED-REVIEWED	D. ETTINGER		11\23
DESIGN2-DETAILED2			
DESIGN3-DETAILED3			
REVISIONS 1			
REVISIONS 2			
REVISIONS 3			
REVISIONS 4			
FIELD CHANGES			

SIGNATURE

P.E. NUMBER

DATE

NORTH YARMOUTH
ROUTE 115

SPECIAL DETAILS - CULVERT

SHEET NUMBER
5
OF 17

Filename: ...\Highway\005_CulvertDetail2.dgn Division: HIGHWAY Username: Jeff.Fitzmaurice Date:11/9/2023

U:\3571-North Yarmouth Route 115 Culvert\Z - CAD\00\Highway\005_CulvertDetail2.dgn

SP = SPECIAL PROVISION

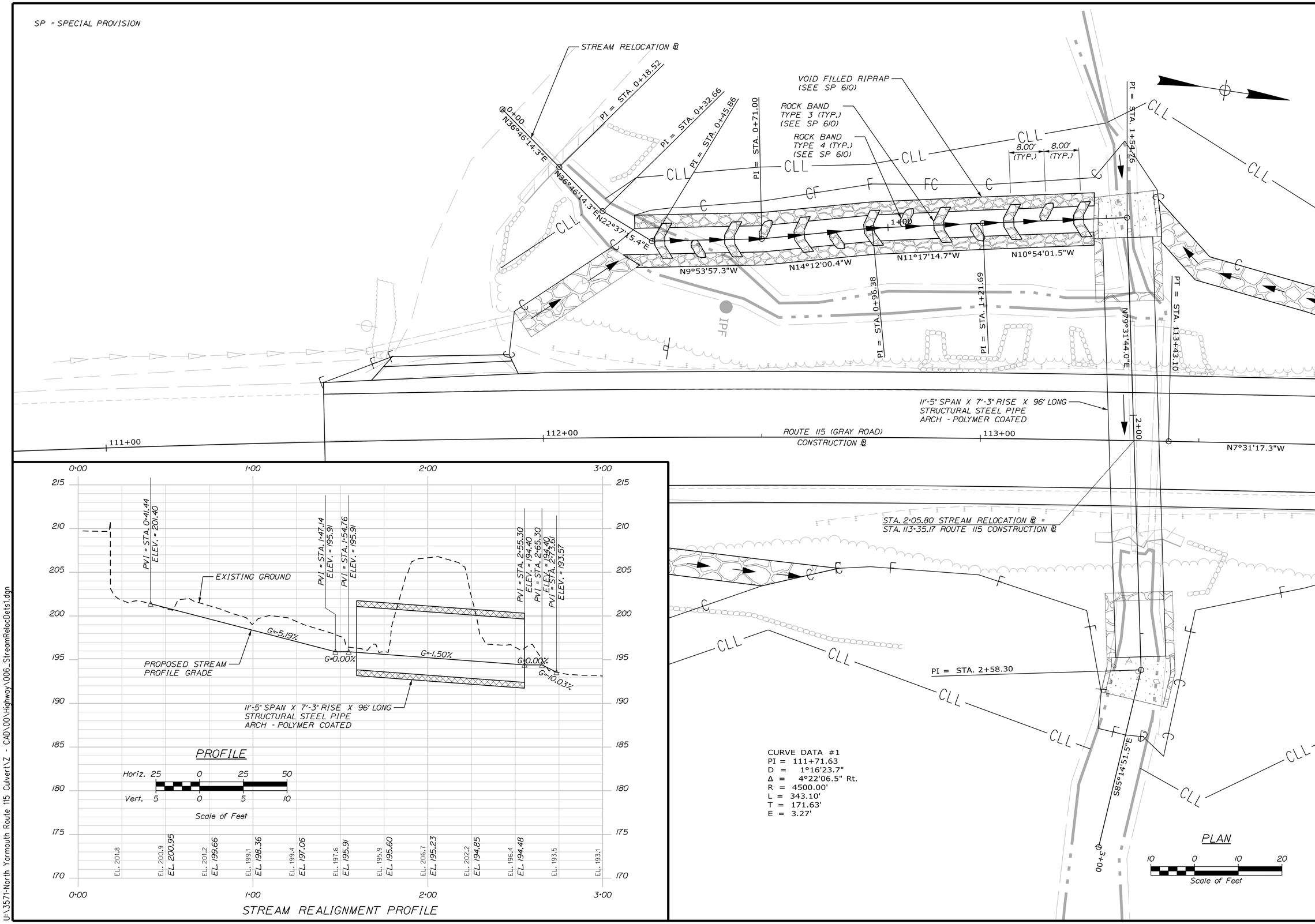

CURVE DATA #1
PI = 111+71.63
D = 1°16'23.7"
Δ = 4°22'06.5" Rt.
R = 4500.00'
L = 343.10'
T = 171.63'
E = 3.27'

STREAM REALIGNMENT PROFILE

STATE OF MAINE
DEPARTMENT OF TRANSPORTATION

WIN 23693.00

HIGHWAY PLANS

		BY	DATE
PROJ. MANAGER	L. HAMILTON		
DESIGN-DETAILED	T. LANDRY	T. WARREN	11\23
CHECKED-REVIEWED	D. ETTINGER		11\23
DESIGN2-DETAILED2			
DESIGN3-DETAILED3			
REVISIONS 1			
REVISIONS 2			
REVISIONS 3			
REVISIONS 4			
FIELD CHANGES			

SIGNATURE

P.E. NUMBER

DATE

NORTH YARMOUTH
ROUTE 115
SPECIAL DETAILS -
STREAM REALIGNMENT

SHEET NUMBER
6
OF 17

Filename: ...\006_StreamRelocDets1.dgn Division: HIGHWAY Username: Jeff.Fitzmaurice Date:11/9/2023

U:\3571-North Yarmouth Route 115 Culvert\Z - CAD\00\Highway\006_StreamRelocDets1.dgn

SP = SPECIAL PROVISION

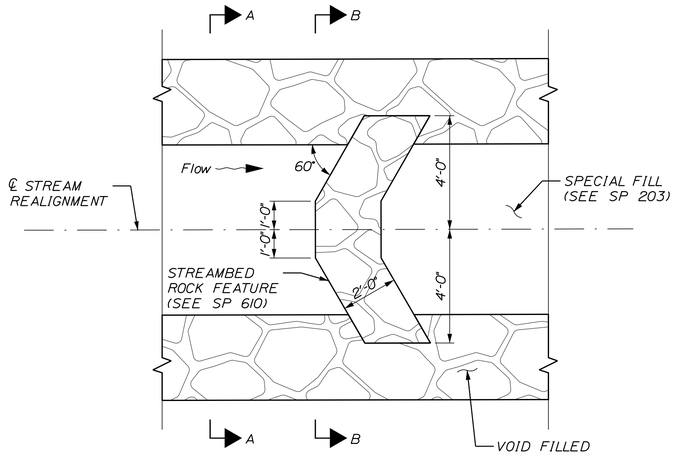

ROCK BAND TYPE 3 DETAIL

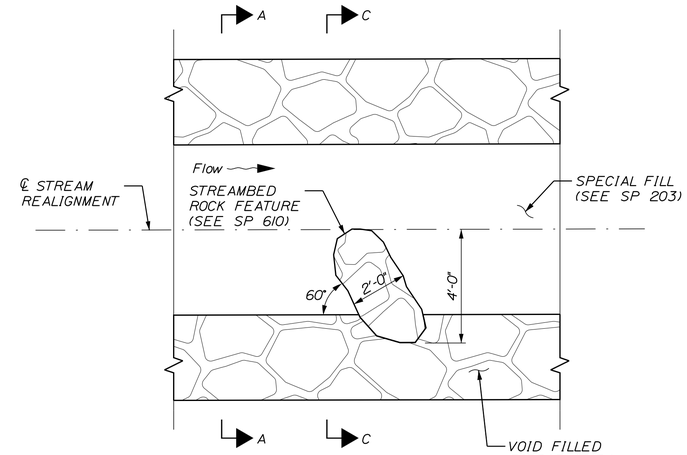

ROCK BAND TYPE 4 DETAIL

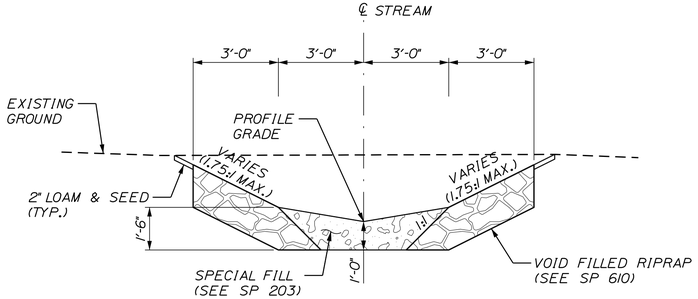

SECTION A-A
STREAM REALIGNMENT

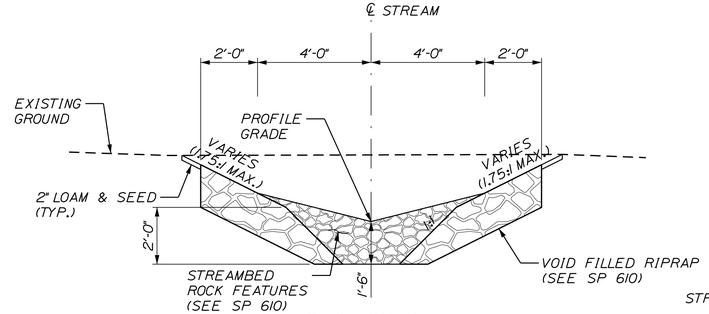

SECTION B-B
ROCK BAND TYPE 3

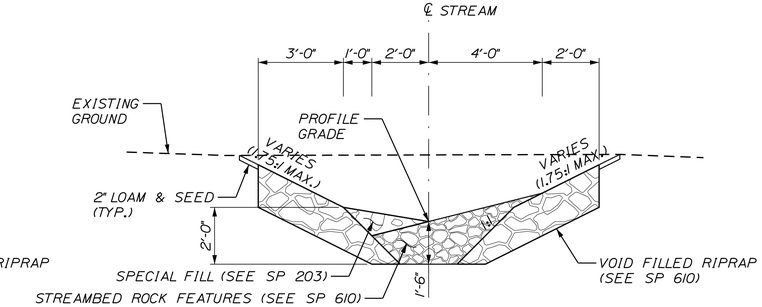

SECTION C-C
ROCK BAND TYPE 4

NOT TO SCALE

GORRILL PALMER

Relationships. Responsiveness. Results.
www.gorrillpalmer.com
207.772.2515

STATE OF MAINE
DEPARTMENT OF TRANSPORTATION

WIN 23693.00

HIGHWAY PLANS

PROJ. MANAGER	L. HAMILTON	BY	DATE
DESIGN-DETAILED	T. LANDRY	T. WARREN	11\23
CHECKED-REVIEWED	D. ETTINGER		
DESIGN2-DETAILED2			
DESIGN3-DETAILED3			
REVISIONS 1			
REVISIONS 2			
REVISIONS 3			
REVISIONS 4			
FIELD CHANGES			

SIGNATURE

P.E. NUMBER

DATE

NORTH YARMOUTH
ROUTE 115
SPECIAL DETAILS - STREAM REALIGNMENT

SHEET NUMBER
7
OF 17

Filename: ...\007_StreamRelocDets2.dgn Division: HIGHWAY Username: Jeff.Fitzmaurice Date:11/9/2023

U:\3571-North Yarmouth Route 115 Culvert\Z - CAD\00\Highway\007_StreamRelocDets2.dgn

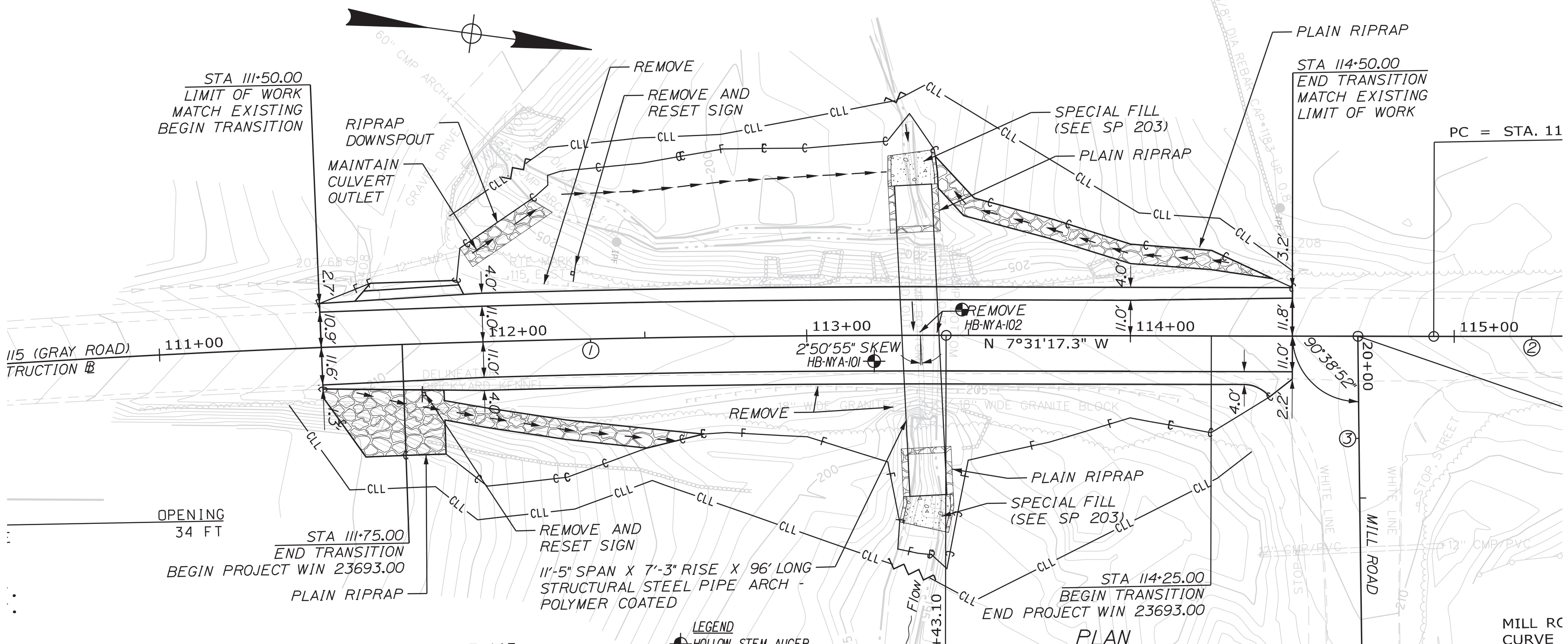

CY	DESCRIPTION
58	SLOPE PROTECTION (3' DEPTH)
12	DOWNSPOUT
17	CULVERT END PROTECTION
17	CULVERT END PROTECTION

ROUTE 115
CURVE DATA #1
PI = 111+71.63
D = 1°16'23.7"
Δ = 4°22'06.5" Rt.
R = 4500.00'

MILL RC
CURVE
PI = 2
D =
Δ =
R = 14
L = 30
T = 15

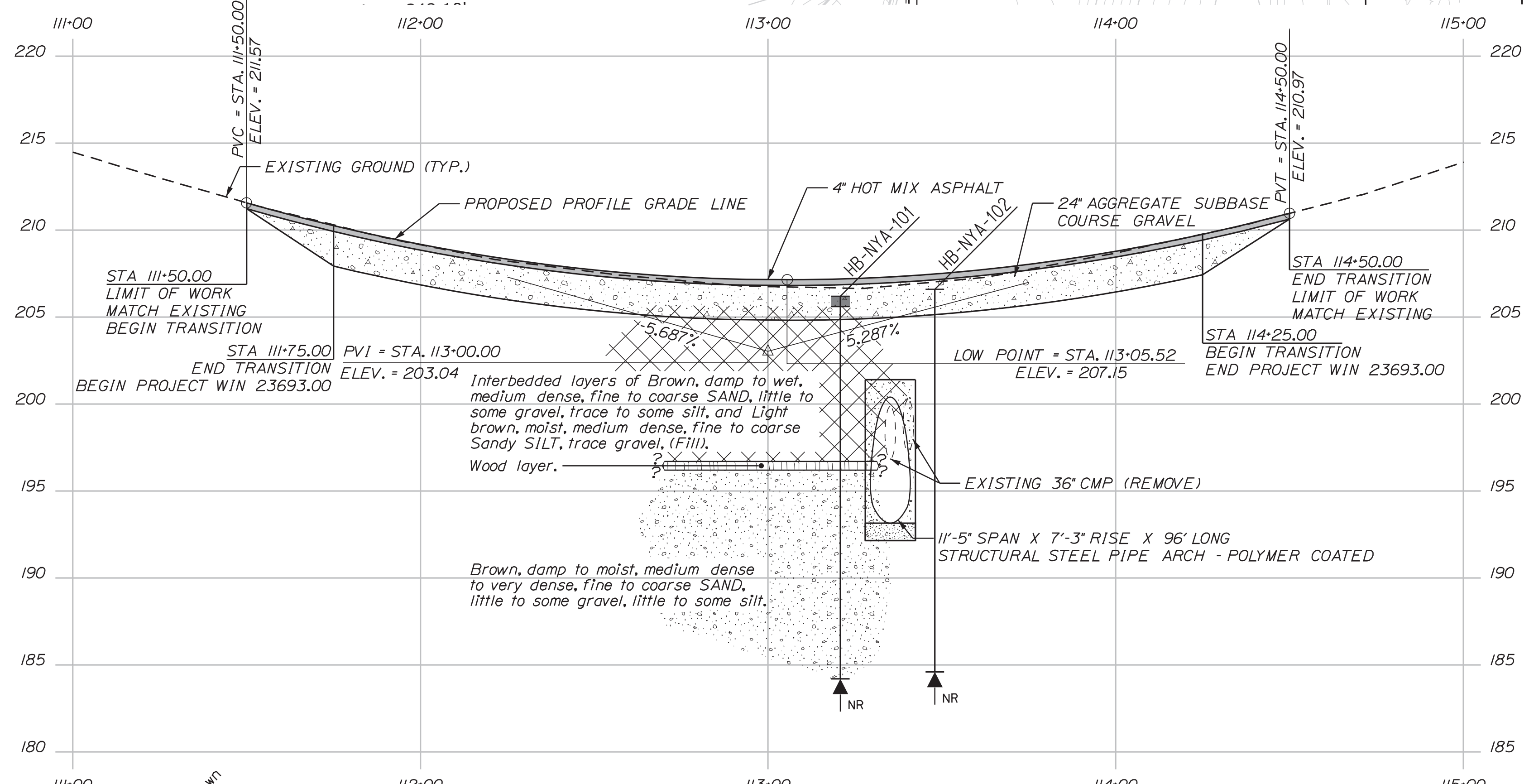

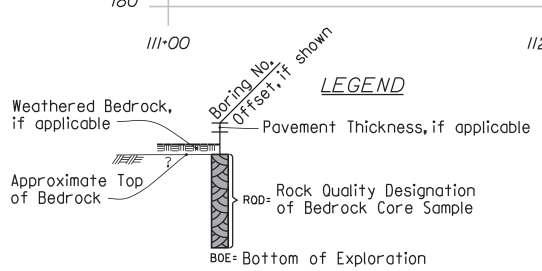

Note: This generalized interpretive soil profile is intended to convey trends in subsurface conditions. The boundaries between strata are approximate and idealized, and have been developed by interpretations of widely spaced explorations and samples. Actual soil and bedrock transitions may vary and are probably more erratic. For more specific information refer to the exploration logs.

Maine Department of Transportation
Soil/Rock Exploration Log
US CUSTOMARY UNITS

Project: Route 115 Large Culvert
Location: North Yarmouth, Maine
Boring No.: HB-NYA-101
WIN: 23693.00

Driller:	S.W. Cole	Elevation (ft.)	206.2	Auger ID/OD:	2.5/6.25"
Operator:	Brett/Cory	Datum:	NAVD88	Sampler:	Standard Split Spoon
Logged By:	B.Wilder	Rig Type:	Diedrich D-50 Track	Hammer Wt./Fall:	140#/30"
Date Start/Finish:	12/6/2019; 08:00-11:00	Drilling Method:	Hollow Stem Auger	Core Barrel:	N/A
Boring Location:	113+20.8, 8.0 ft Rt.	Casing ID/OD:	N/A	Water Level*:	12.0 ft bgs.
Hammer Efficiency Factor: 1.011		Hammer Type:	Automatic ☒ Hydraulic ☐ Rope & Cathead ☐		

Definitions: D = Split Spoon Sample; MD = Unsuccessful Split Spoon Sample Attempt; U = Thin Wall Tube Sample; MU = Unsuccessful Thin Wall Tube Sample Attempt; V = Field Vane Shear Test, PP = Pocket Penetrometer; MV = Unsuccessful Field Vane Shear Test Attempt; R = Rock Core Sample; SSA = Solid Stem Auger; HSA = Hollow Stem Auger; RC = Roller Cone; WOH = Weight of 140lb. Hammer; WOR/C = Weight of Rods or Casing; WO1P = Weight of One Person; S_u = Peak/Remolded Field Vane Undrained Shear Strength (psf); $S_{u(lab)}$ = Lab Vane Undrained Shear Strength (psf); q_p = Unconfined Compressive Strength (ksf); N-uncorrected = Raw Field SPT N-value; Hammer Efficiency Factor = Rig Specific Annual Calibration Value; N_{60} = SPT N-uncorrected Corrected for Hammer Efficiency; N_{60} = (Hammer Efficiency Factor/60%)*N-uncorrected; T_v = Pocket Torvane Shear Strength (psf); WC = Water Content, percent; LL = Liquid Limit; PL = Plastic Limit; PI = Plasticity Index; G = Grain Size Analysis; C = Consolidation Test

Depth (ft.)	Sample No.	Pen./Rec. (in.)	Sample Depth (ft.)	Blows (/6 in.) Shear Strength (psf) or RQD (%)	N-uncorrected	N_{60}	Casing Blows	Elevation (ft.)	Graphic Log	Visual Description and Remarks	Laboratory Testing Results/ AASHTO and Unified Class
0							HSA	205.6		7" HMA. 0.6	
	1D	24/11	2.00 - 4.00	8/9/8/6	17	29				Brown, damp, medium dense, fine to coarse SAND, some gravel, trace silt.	G#340661 A-1-a, SW-SM WC=2.1%
5	2D/A	24/18	4.50 - 6.50	8/6/7/3	13	22				2D (4.5-6.0 ft bgs) Brown, damp, medium dense, fine to coarse SAND some gravel, some silt. Layer of old pavement.	G#340662 A-2-4, SM WC=3.6%
								200.2		6.0 2D/A (6.0-6.5 ft bgs) Light brown, moist, medium stiff, fine to coarse Sandy SILT, trace gravel.	G#340663 A-4, CL WC=20.4%
10	3D	24/15	9.50 - 11.50	26/6/11/10	17	29		197.2		9.0 Brown, wet, medium dense, fine to coarse SAND, some silt, little gravel.	
								196.7		9.5 Wood Layer from 9.5-10.0 ft bgs.	
								196.2		10.0 Brown, wet, medium dense, fine to coarse SAND, some silt, little gravel.	G#340664 A-2-4, SM WC=27.7%
15	4D	24/14	14.50 - 16.50	15/18/22/21	40	67				Brown, moist, very dense, fine to coarse SAND, some gravel, little silt.	G#340665 A-2-4, SM WC=7.5%
20	5D	24/15	20.00 - 22.00	10/10/39/14	49	83				Brown, moist, very dense, fine to coarse SAND, little gravel, little silt.	G#340666 A-1-b, SM WC=15.3%
								184.2		22.0 Bottom of Exploration at 22.0 feet below ground surface. NO REFUSAL	
25											

Remarks:

Hammer #306

Stratification lines represent approximate boundaries between soil types; transitions may be gradual.

* Water level readings have been made at times and under conditions stated. Groundwater fluctuations may occur due to conditions other than those present at the time measurements were made.

Page 1 of 1

Boring No.: HB-NYA-101

Maine Department of Transportation
Soil/Rock Exploration Log
US CUSTOMARY UNITS

Project: Route 115 Large Culvert
Location: North Yarmouth, Maine
Boring No.: HB-NYA-102
WIN: 23693.00

Drilling Contractor:	S.W. Cole	Elevation (ft.)	206.9	Auger ID/OD:	5" Dia.
Operator:	Brett/Cory	Datum:	NAVD88	Sampler:	N/A
Logged By:	B.Wilder	Rig Type:	Diedrich D-50 Track	Hammer Wt./Fall:	N/A
Date Start/Finish:	12/6/2019; 08:00-11:00	Drilling Method:	Solid Stem Auger	Core Barrel:	N/A
Boring Location:	113+48, 8.0 ft Lt.	Casing ID/OD:	N/A	Water Level*:	None Observed

Definitions: D = Split Spoon Sample; S = Sample off Auger Flights; B = Bucket Sample off Auger Flights; MD = Unsuccessful Split Spoon Sample Attempt; U = Thin Wall Tube Sample; MV = Unsuccessful Field Vane Shear Test Attempt; V = Field Vane Shear Test, PP= Pocket Penetrometer; MU = Unsuccessful Thin Wall Tube Sample Attempt; R = Rock Core Sample; SSA = Solid Stem Auger; HSA = Hollow Stem Auger; RC = Roller Cone; WOH = Weight of 140lb. Hammer; WOR/C = Weight of Rods or Casing; WO1P = Weight of 1 Person; S_u = Peak/Remolded Field Vane Undrained Shear Strength (psf); $S_{u(lab)}$ = Lab Vane Undrained Shear Strength (psf); q_p = Unconfined Compressive Strength (ksf); N-value = Raw Field SPT N-value; T_v = Pocket Torvane Shear Strength (psf); WC = Water Content, percent; # = Similar or Equal too; LL = Liquid Limit; PL = Plastic Limit; PI = Plasticity Index; G = Grain Size Analysis; C = Consolidation Test

Depth (ft.)	Sample No.	Pen./Rec. (in.)	Sample Depth (ft.)	Blows (/6 in.) Shear Strength (psf) or RQD (%)	N-value	Casing Blows	Elevation (ft.)	Graphic Log	Visual Description and Remarks	Laboratory Testing Results/ AASHTO and Unified Class
0						SSA			Probe, no material samples taken.	
5										
10										
15										
20							184.90		22.00 Bottom of Exploration at 22.0 feet below ground surface. NO REFUSAL	
25										

Remarks:

Stratification lines represent approximate boundaries between soil types; transitions may be gradual.

* Water level readings have been made at times and under conditions stated. Groundwater fluctuations may occur due to conditions other than those present at the time measurements were made.

Page 1 of 1

Boring No.: HB-NYA-102

STATE OF MAINE
DEPARTMENT OF TRANSPORTATION
23693.00
WIN 23693.00
HIGHWAY PLANS

STATE OF MAINE · Cody A. Russell · 15866 · LICENSED · PROFESSIONAL ENGINEER

SIGNATURE
15866
P.E. NUMBER
4/7/2023
DATE

	BY	DATE
PROJ. MANAGER		
DESIGN-DETAILED		
CHECKED-REVIEWED		
DESIGN2-DETAILED2	C.RUSSELL	T.WHITE / MAR 2023
DESIGN3-DETAILED3		
REVISIONS 1		
REVISIONS 2		
REVISIONS 3		
REVISIONS 4		
FIELD CHANGES		

NORTH YARMOUTH ROUTE 115

BORING LOCATION PLAN & INTERPRETIVE SUBSURFACE PROFILE WITH BORING LOGS

SHEET NUMBER 8 OF 17

Filename: ...\MSTA\002_BLP&ISP WBL1.dgn Division: GEOTECH Username: Cody.A.Russell Date:4/7/2023

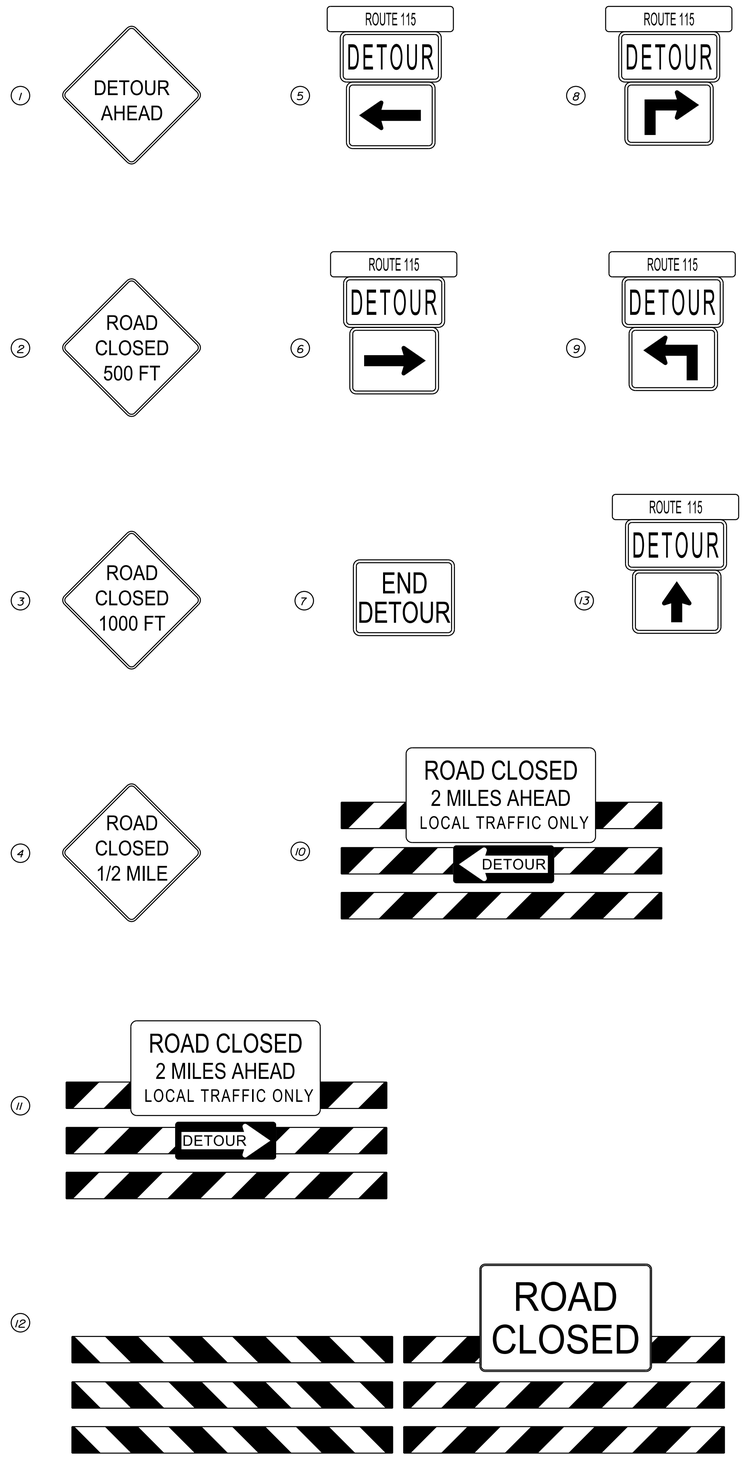

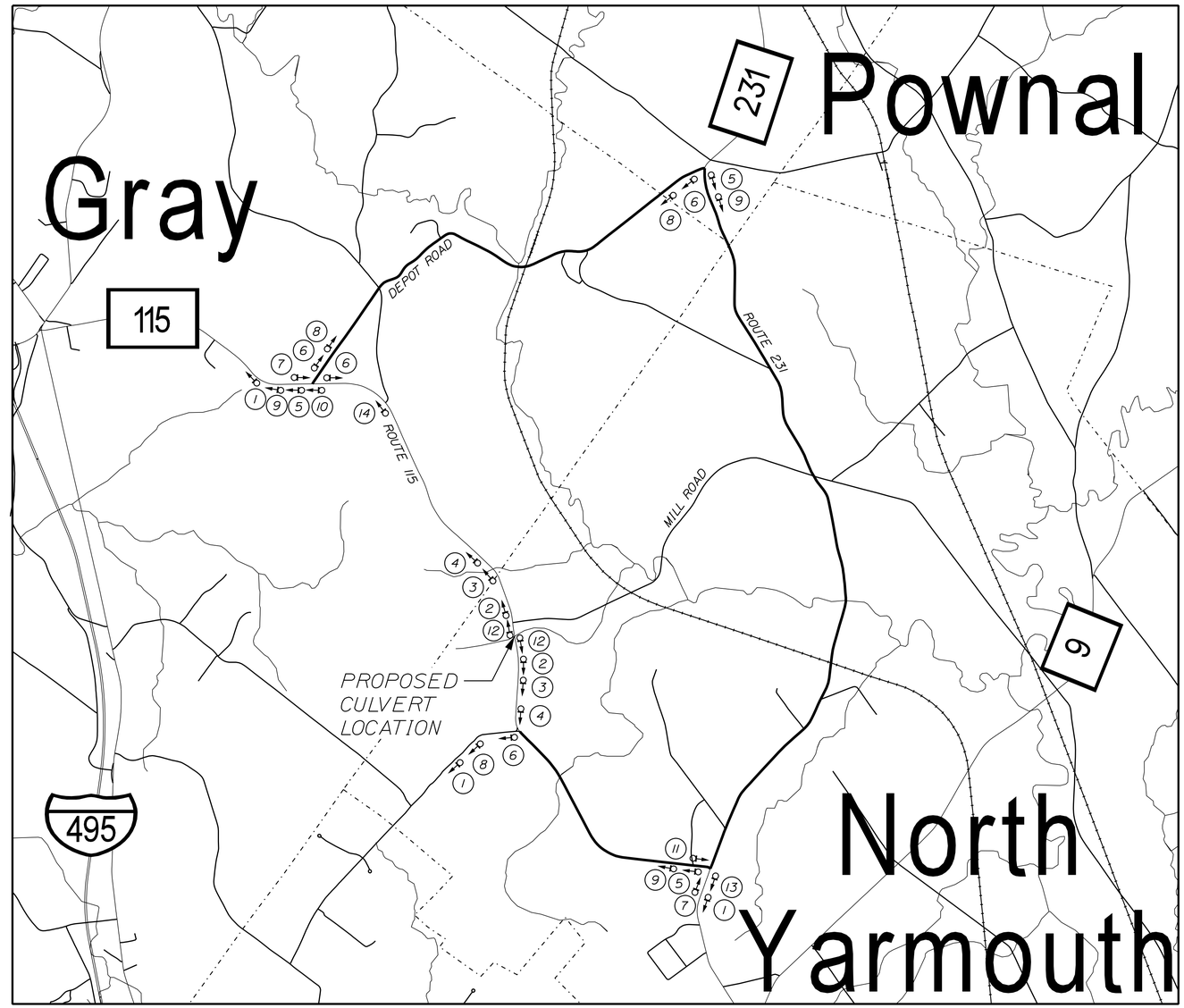

N

STATE OF MAINE
DEPARTMENT OF TRANSPORTATION

WIN 23693.00

HIGHWAY PLANS

PROJ. MANAGER	L. HAMILTON		
DESIGN-DETAILED	T. LANDRY	BY	DATE
CHECKED-REVIEWED	D. ETTINGER	T. WARREN	11\23
DESIGN2-DETAILED2	-		11\23
DESIGN3-DETAILED3	-		-
REVISIONS 1	-		-
REVISIONS 2	-		-
REVISIONS 3	-		-
REVISIONS 4	-		-
FIELD CHANGES	-		-

SIGNATURE

P.E. NUMBER

DATE

NORTH YARMOUTH
ROUTE 115

DETOUR PLAN

SHEET NUMBER

8a

OF 17

Filename: ...\Highway\008a_Detour Plan.dgn Division: HIGHWAY Username: Jeff.Fitzmaurice Date:11/9/2023

U:\3571-North Yarmouth Route 115 Culvert\Z - CAD\00\Highway\008a_Detour Plan.dgn

SP = SPECIAL PROVISION

STRIPING LEGEND
DSYL - 4" DOUBLE SOLID YELLOW LINE
SWLL - 4" SOLID WHITE LANE LINE

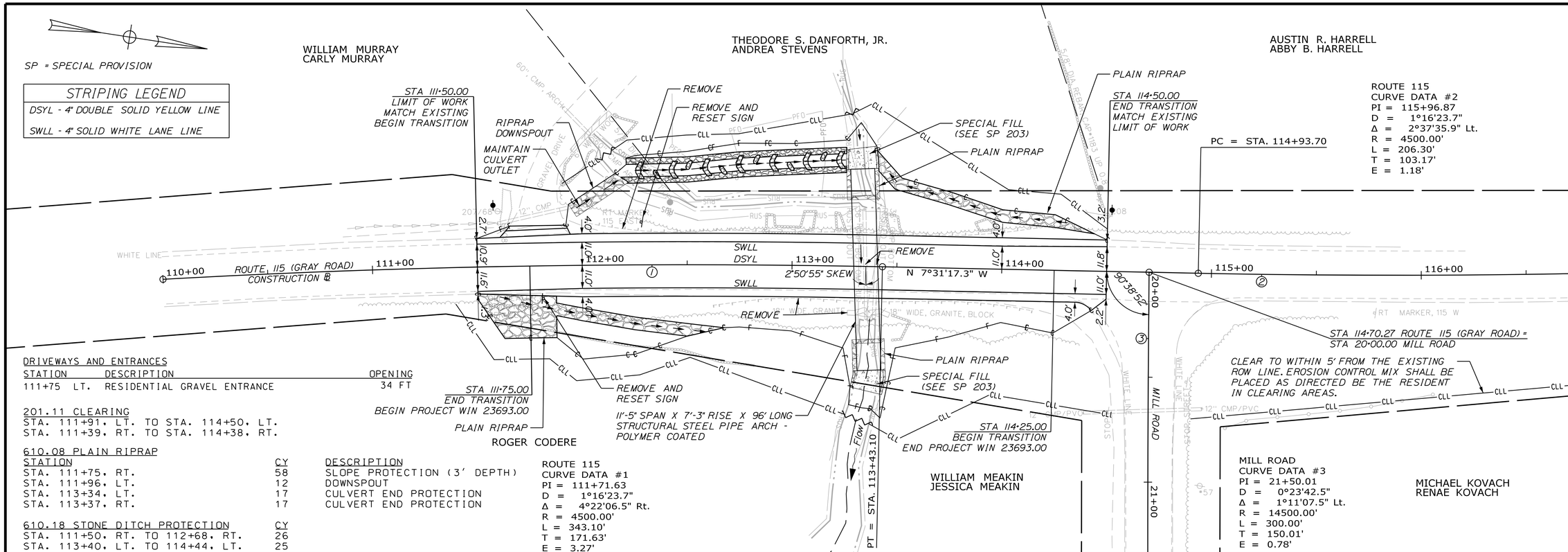

DRIVEWAYS AND ENTRANCES

STATION	DESCRIPTION	OPENING
111+75 LT.	RESIDENTIAL GRAVEL ENTRANCE	34 FT

201.11 CLEARING
STA. 111+91, LT. TO STA. 114+50, LT.
STA. 111+39, RT. TO STA. 114+38, RT.

610.08 PLAIN RIPRAP

STATION	CY	DESCRIPTION
STA. 111+75, RT.	58	SLOPE PROTECTION (3' DEPTH)
STA. 111+96, LT.	12	DOWNSPOUT
STA. 113+34, LT.	17	CULVERT END PROTECTION
STA. 113+37, RT.	17	CULVERT END PROTECTION

610.18 STONE DITCH PROTECTION

STATION	CY
STA. 111+50, RT. TO 112+68, RT.	26
STA. 113+40, LT. TO 114+44, LT.	25

ROUTE 115
CURVE DATA #1
PI = 111+71.63
D = 1°16'23.7"
Δ = 4°22'06.5" Rt.
R = 4500.00'
L = 343.10'
T = 171.63'
E = 3.27'

PLAN/PROFILE

Horiz. 25 0 25 50
Vert. 5 0 5 10
Scale of Feet

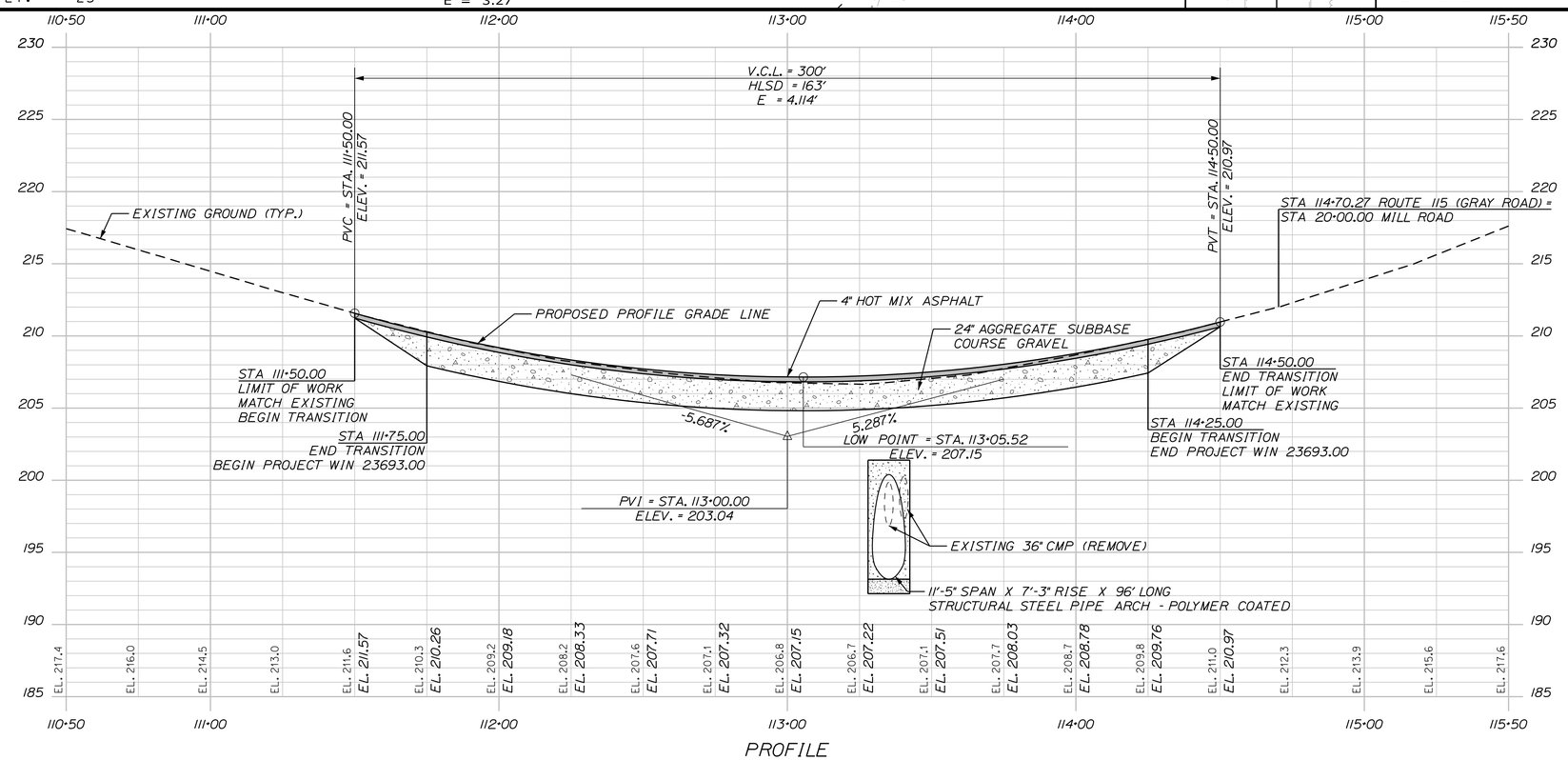

PROFILE

STATE OF MAINE
DEPARTMENT OF TRANSPORTATION

WIN 23693.00
HIGHWAY PLANS

		BY	DATE
PROJ. MANAGER	L. HAMILTON		
DESIGN-DETAILED	T. LANDRY	T. WARREN	11\23
CHECKED-REVIEWED	D. ETTINGER		11\23
DESIGN2-DETAILED2			
DESIGN3-DETAILED3			
REVISIONS 1			
REVISIONS 2			
REVISIONS 3			
REVISIONS 4			
FIELD CHANGES			

SIGNATURE
P.E. NUMBER
DATE

NORTH YARMOUTH
ROUTE 115

PLAN/PROFILE

SHEET NUMBER
9
OF 17

Filename: ...\00\Highway\009_Plan01.dgn Division: HIGHWAY Username: Jeff.Fitzmaurice Date:11/9/2023
U:\3571-North Yarmouth Route 115 Culvert\Z - CAD\00\Highway\009_Plan01.dgn

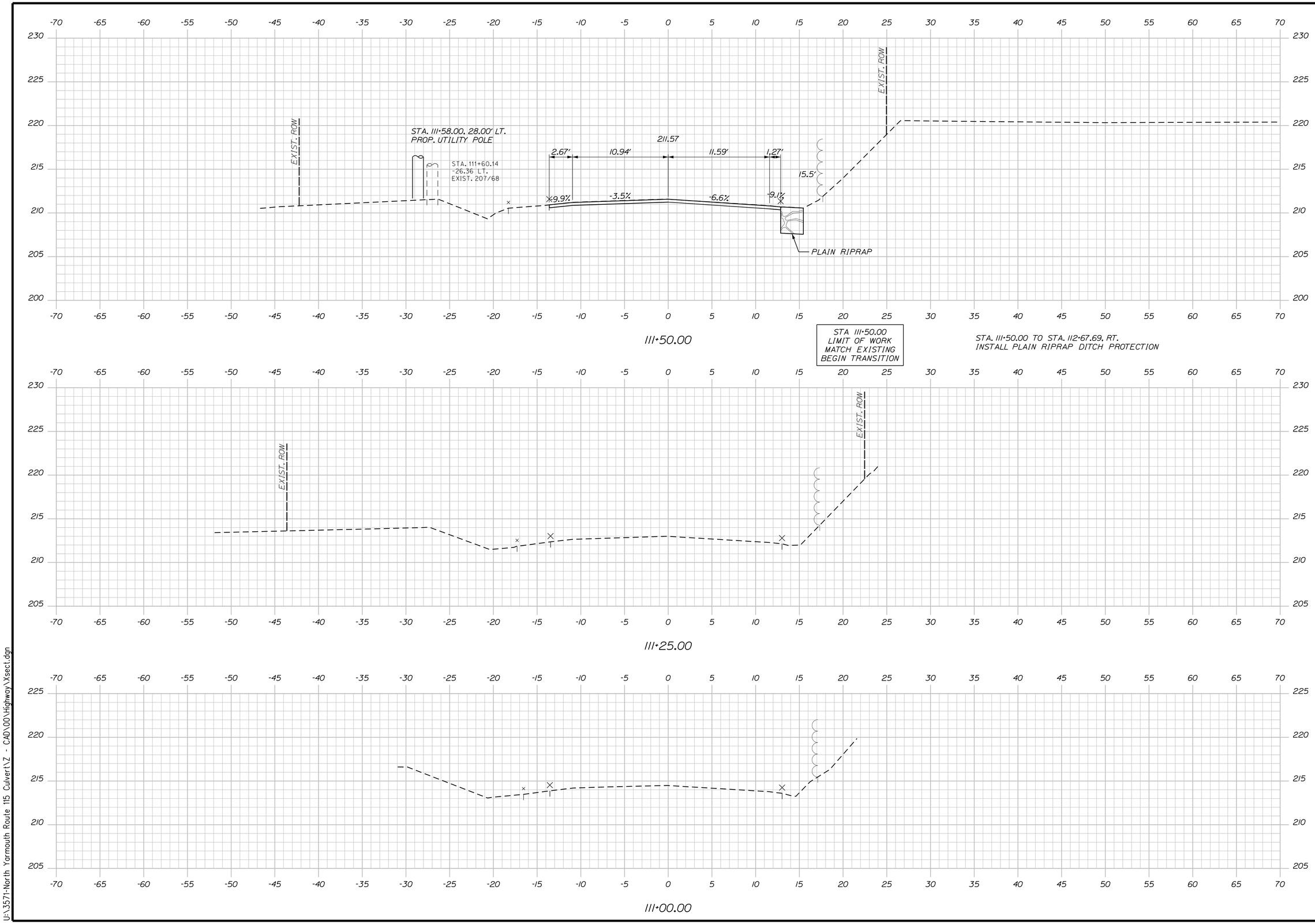

STATE OF MAINE
DEPARTMENT OF TRANSPORTATION

WIN 23693.00

HIGHWAY PLANS

PROJ. MANAGER	L. HAMILTON	BY	DATE
DESIGN-DETAILED	T. LANDRY	T. WARREN	11\23
CHECKED-REVIEWED	D. ETTINGER		11\23
DESIGN2-DETAILED2	-	-	-
DESIGN3-DETAILED3	-	-	-
REVISIONS 1	-	-	-
REVISIONS 2	-	-	-
REVISIONS 3	-	-	-
REVISIONS 4	-	-	-
FIELD CHANGES	-	-	-

SIGNATURE

P.E. NUMBER

DATE

NORTH YARMOUTH
ROUTE 115

CROSS SECTIONS

SHEET NUMBER
10
OF 17

Filename: ...\Z - CAD\00\Highway\Xsect.dgn Division: HIGHWAY Username: Jeff.Fitzmaurice Date:11/9/2023

U:\3571-North Yarmouth Route 115 Culvert\Z - CAD\00\Highway\Xsect.dgn

Sta. 111+00.00 to Sta. 111+50.00

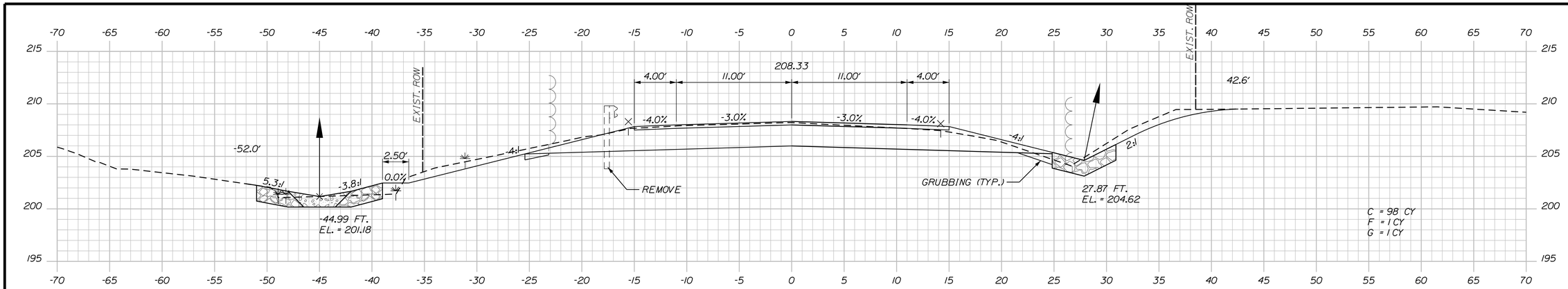

112+25.00

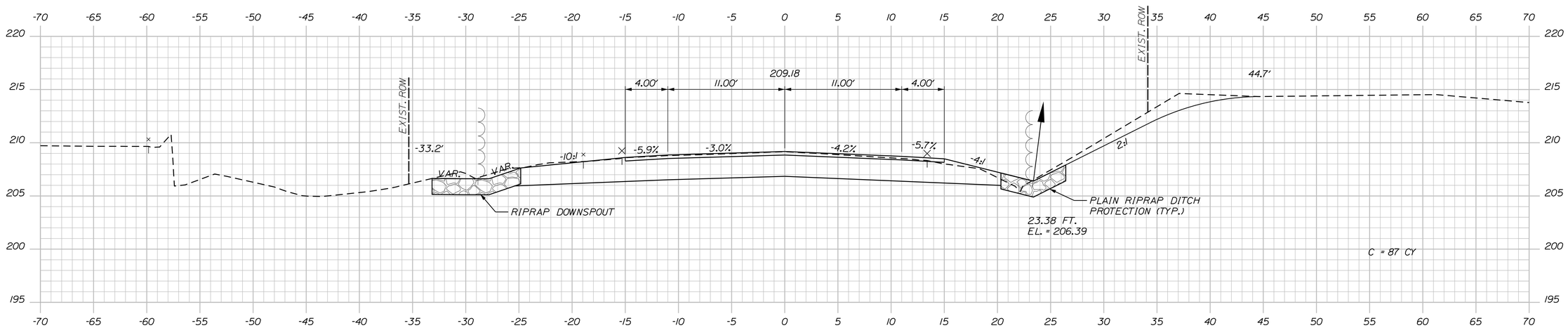

STA. 111+96. LT.
CONSTRUCT RIPRAP DOWNSPOUT

112+00.00

STA. 111+87.5. TO STA. 112+67.7 RT.
INSTALL PLAIN RIPRAP DITCH PROTECTION

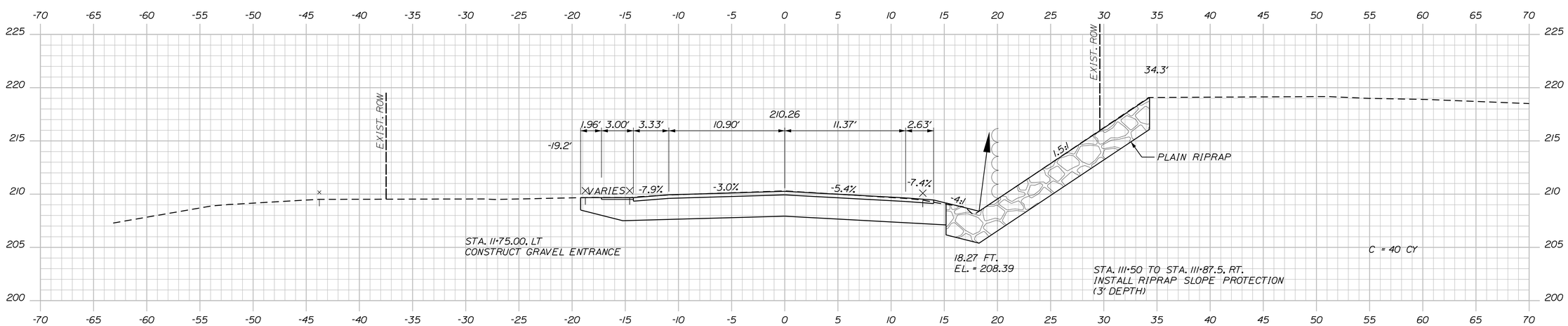

STA. 111+75.00. LT
CONSTRUCT GRAVEL ENTRANCE

STA. 111+50 TO STA. 111+87.5. RT.
INSTALL RIPRAP SLOPE PROTECTION
(3' DEPTH)

111+75.00
(RESIDENTIAL GRAVEL ENTRANCE)

STA 111+75.00
END TRANSITION
BEGIN PROJECT WIN 23693.00

STATE OF MAINE
DEPARTMENT OF TRANSPORTATION

WIN 23693.00

HIGHWAY PLANS

		BY	DATE
PROJ. MANAGER	L. HAMILTON		
DESIGN-DETAILED	T. LANDRY	T. WARREN	11\23
CHECKED-REVIEWED	D. ETTINGER		11\23
DESIGN2-DETAILED2			
DESIGN3-DETAILED3			
REVISIONS 1			
REVISIONS 2			
REVISIONS 3			
REVISIONS 4			
FIELD CHANGES			

SIGNATURE

P.E. NUMBER

DATE

NORTH YARMOUTH
ROUTE 115

CROSS SECTIONS

SHEET NUMBER
11
OF 17

Sta. 111+75.00 to Sta. 112+25.00

Filename: ...\Z - CAD\00\Highway\Xsect.dgn Division: HIGHWAY Username: Jeff.Fitzmaurice Date:11/9/2023

U:\3571-North Yarmouth Route 115 Culvert\Z - CAD\00\Highway\Xsect.dgn

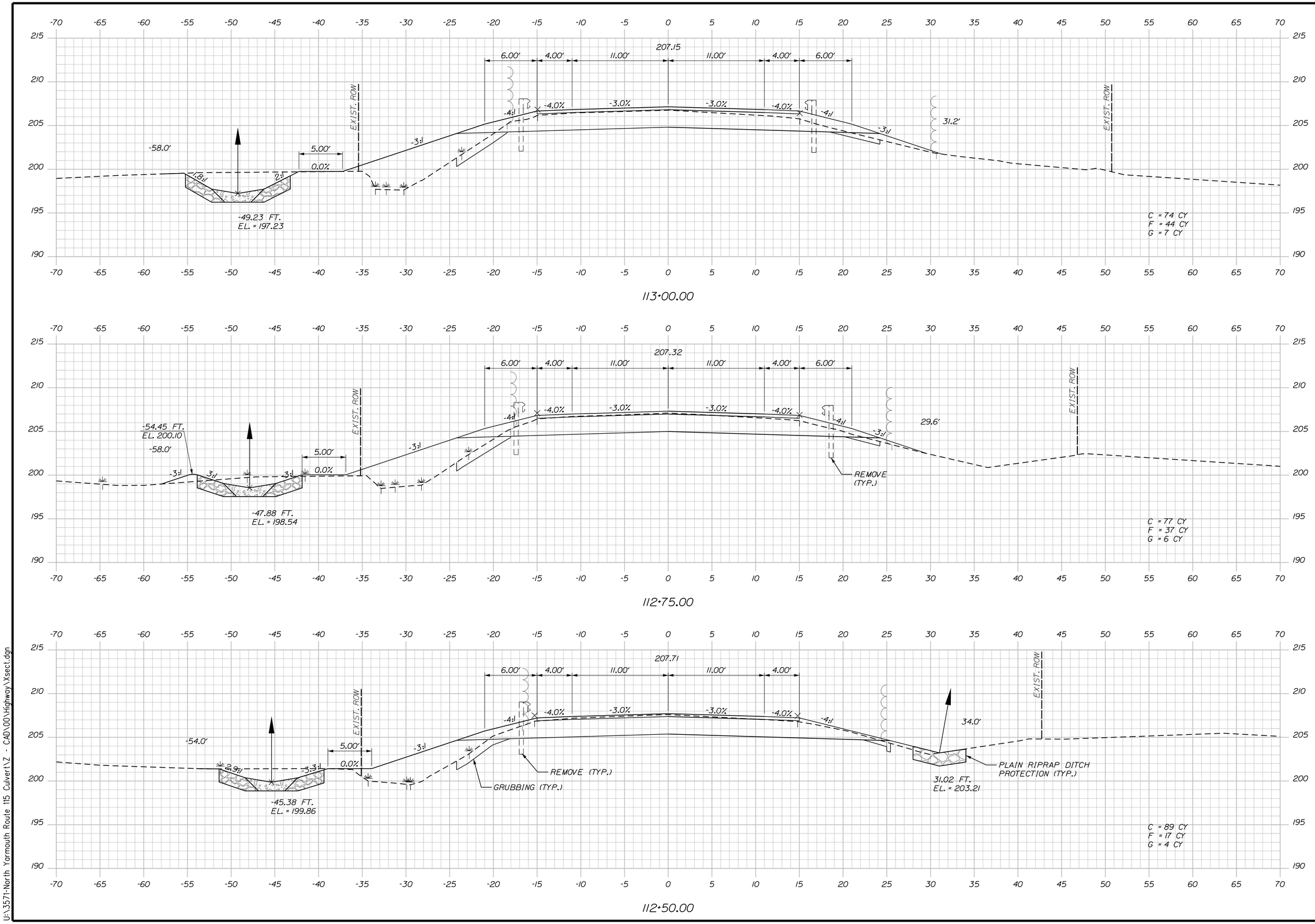

STATE OF MAINE
DEPARTMENT OF TRANSPORTATION

WIN 23693.00

HIGHWAY PLANS

PROJ. MANAGER	L. HAMILTON	BY	DATE
DESIGN-DETAILED	T. LANDRY	T. WARREN	11\23
CHECKED-REVIEWED	D. ETTINGER		11\23
DESIGN2-DETAILED2			
DESIGN3-DETAILED3			
REVISIONS 1			
REVISIONS 2			
REVISIONS 3			
REVISIONS 4			
FIELD CHANGES			

SIGNATURE

P.E. NUMBER

DATE

NORTH YARMOUTH
ROUTE 115

CROSS SECTIONS

SHEET NUMBER
12
OF 17

Sta. 112+50.00 to Sta. 113+00.00

U:\3571-North Yarmouth Route 115 Culvert\Z - CAD\00\Highway\Xsect.dgn
Filename: ...\Z - CAD\00\Highway\Xsect.dgn Division: HIGHWAY Username: Jeff.Fitzmaurice Date:11/9/2023

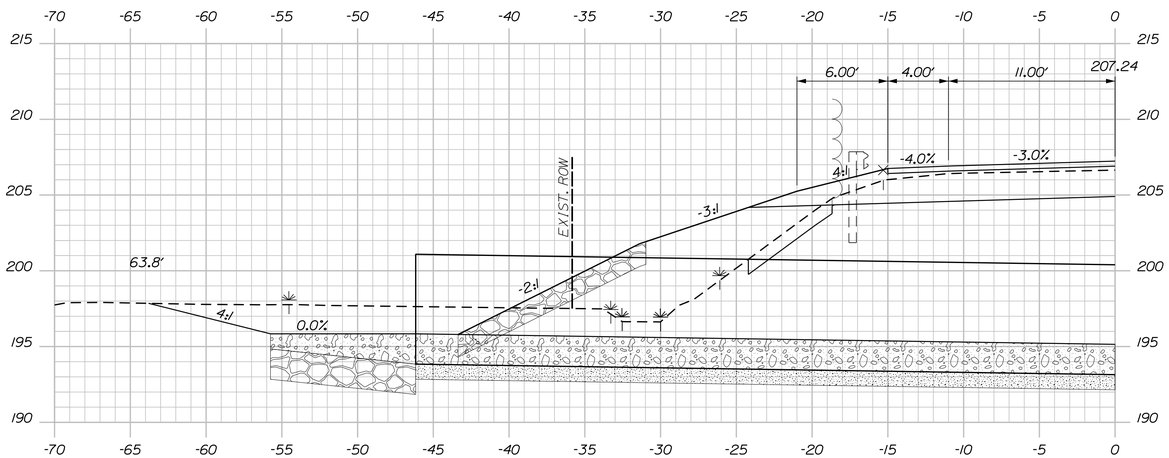

NOTE:
STREAM FEATURES NOT SHOWN
ON INSIDE END SECTION.

STA. 113+24.25, LT. TO 113+41.28, LT.
INSTALL PLAIN RIPRAP CULVERT END SLOPE TREATMENT AND RIPRAP APRON

113+27.23 (INSIDE END OF PIPE ARCH)

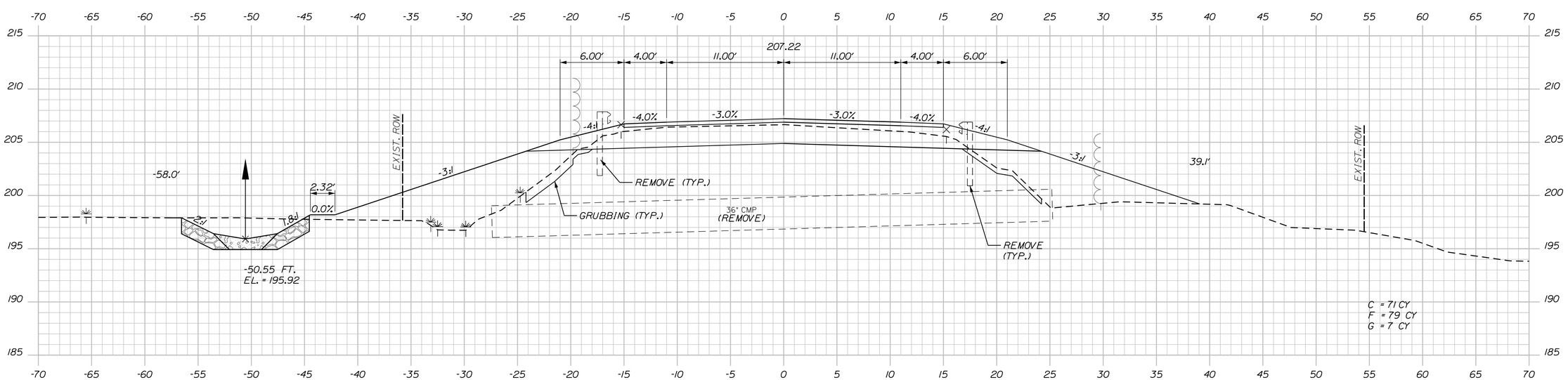

113+25.00

STATE OF MAINE
DEPARTMENT OF TRANSPORTATION

WIN
23693.00

HIGHWAY PLANS

PROJ. MANAGER	L. HAMILTON	BY	DATE
DESIGN-DETAILED	T. LANDRY	T. WARREN	11\23
CHECKED-REVIEWED	D. ETTINGER		11\23
DESIGN2-DETAILED2			
DESIGN3-DETAILED3			
REVISIONS 1			
REVISIONS 2			
REVISIONS 3			
REVISIONS 4			
FIELD CHANGES			

SIGNATURE

P.E. NUMBER

DATE

NORTH YARMOUTH
ROUTE 115

CROSS SECTIONS

SHEET NUMBER
13
OF 17

Sta. 113+25.00 to Sta. 113+27.23

Filename: ...\Z - CAD\00\Highway\Xsect.dgn Division: HIGHWAY Username: Jeff.Fitzmaurice Date:11/9/2023

U:\3571-North Yarmouth Route 115 Culvert\Z - CAD\00\Highway\Xsect.dgn

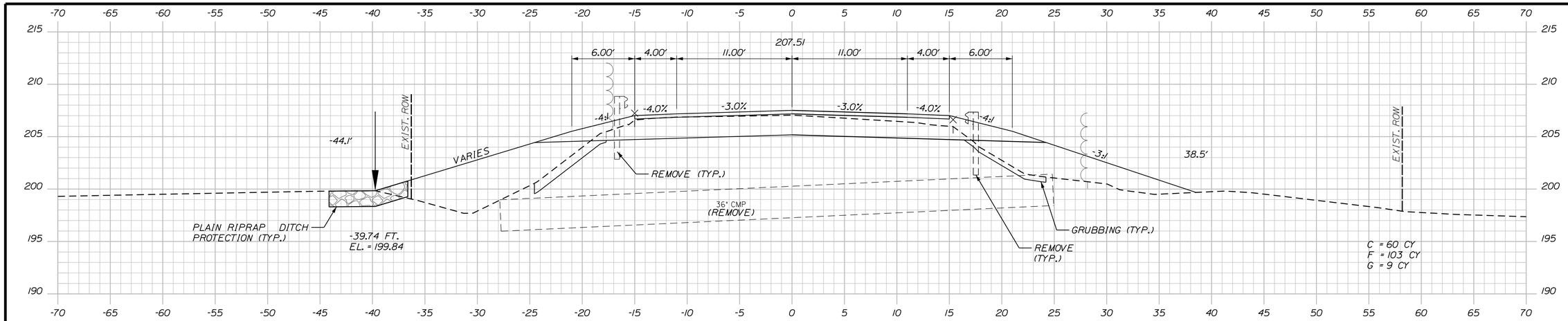

STA. 113+40.34 TO STA. 114+43.94 LT.
INSTALL PLAIN RIPRAP DITCH PROTECTION

113+50.00

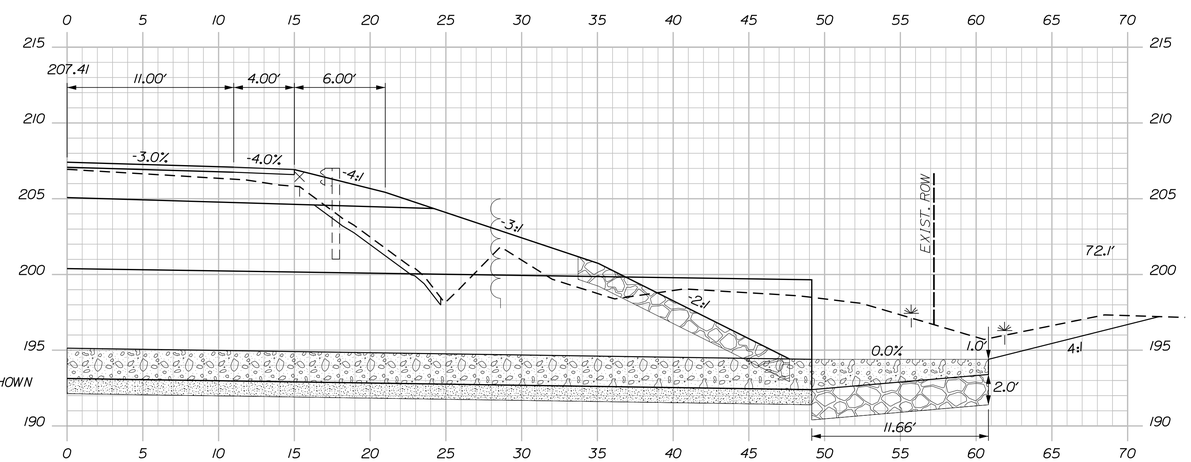

NOTE:
STREAM FEATURES NOT SHOWN
ON INSIDE END SECTION.

113+43.43 (INSIDE END OF PIPE ARCH)

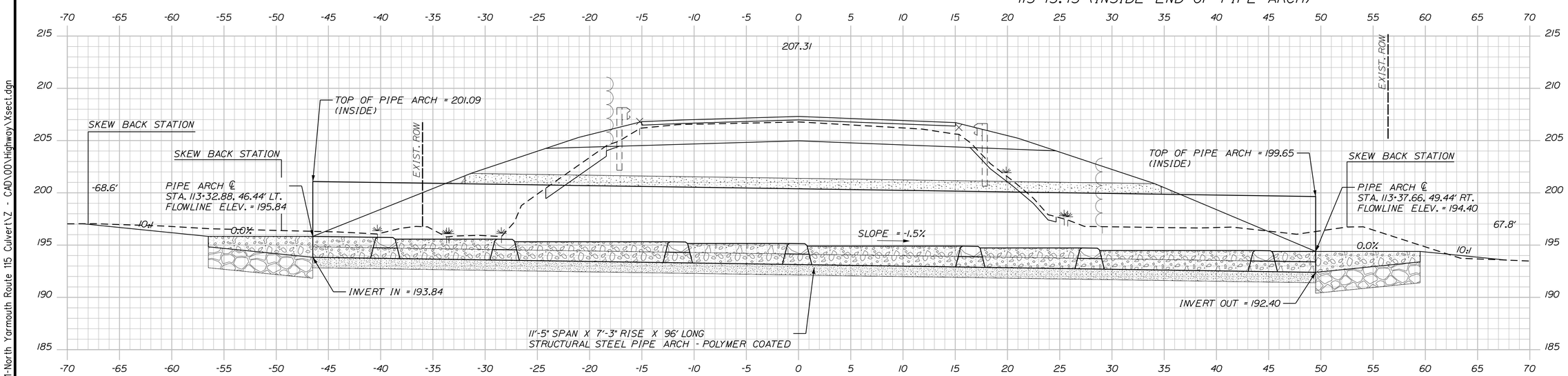

STA. 113+32.88, 46.44' LT. TO 113+37.66, 49.44' RT.
INSTALL 11'-5" SPAN X 7'-3" RISE X 96' LONG STRUCTURAL STEEL PIPE ARCH - POLYMER COATED

113+35.17 (2° 50' 55" SKEW)

STA. 113+29.11, RT. TO 113+45.63, RT.
INSTALL PLAIN RIPRAP CULVERT END SLOPE TREATMENT AND RIPRAP APRON

STATE OF MAINE
DEPARTMENT OF TRANSPORTATION

HIGHWAY PLANS

WIN
23693.00

PROJ. MANAGER	L. HAMILTON	BY	DATE
DESIGN-DETAILED	T. LANDRY	T. WARREN	11\23
CHECKED-REVIEWED	D. ETTINGER		11\23
DESIGN2-DETAILED2			
DESIGN3-DETAILED3			
REVISIONS 1			
REVISIONS 2			
REVISIONS 3			
REVISIONS 4			
FIELD CHANGES			

SIGNATURE

P.E. NUMBER

DATE

NORTH YARMOUTH
ROUTE 115

CROSS SECTIONS

SHEET NUMBER
14
OF 17

Sta. 113+35.17 to Sta. 113+50.00

Filename: ...\Z - CAD\00\Highway\Xsect.dgn Division: HIGHWAY Username: Jeff.Fitzmaurice Date:11/9/2023

U:\3571-North Yarmouth Route 115 Culvert\Z - CAD\00\Highway\Xsect.dgn

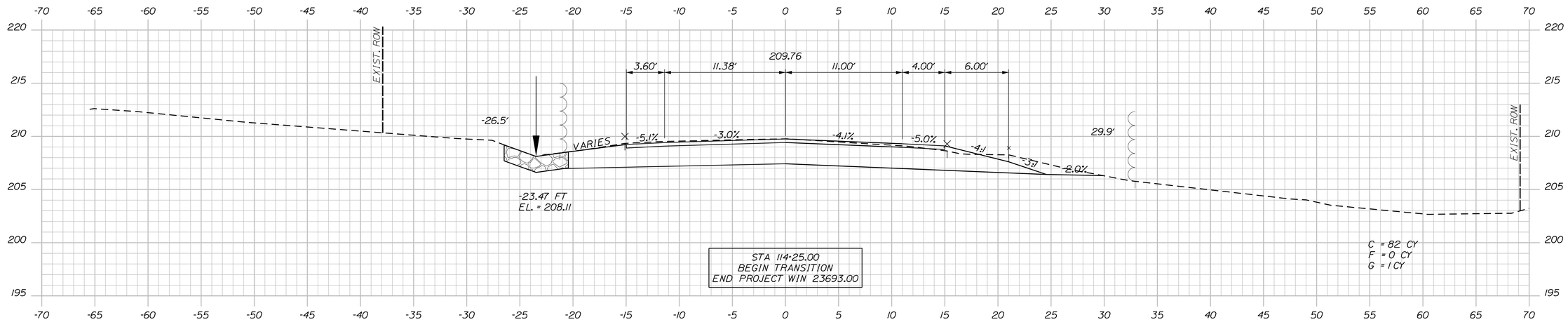

114+25.00

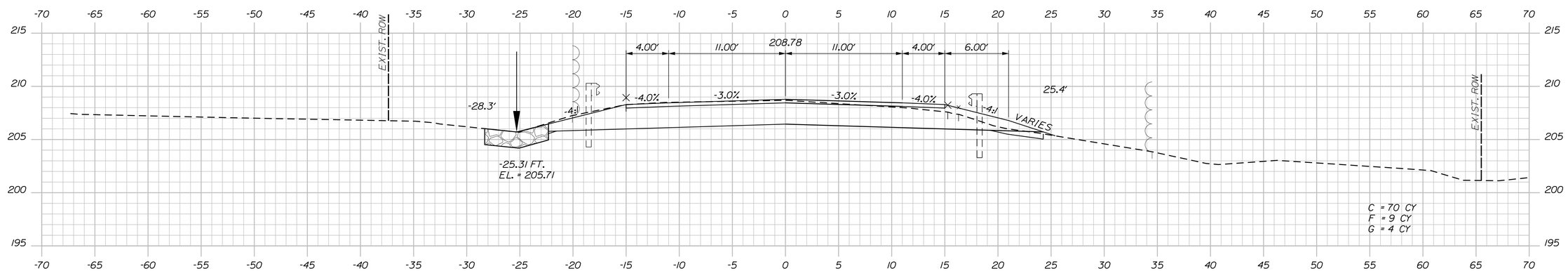

114+00.00

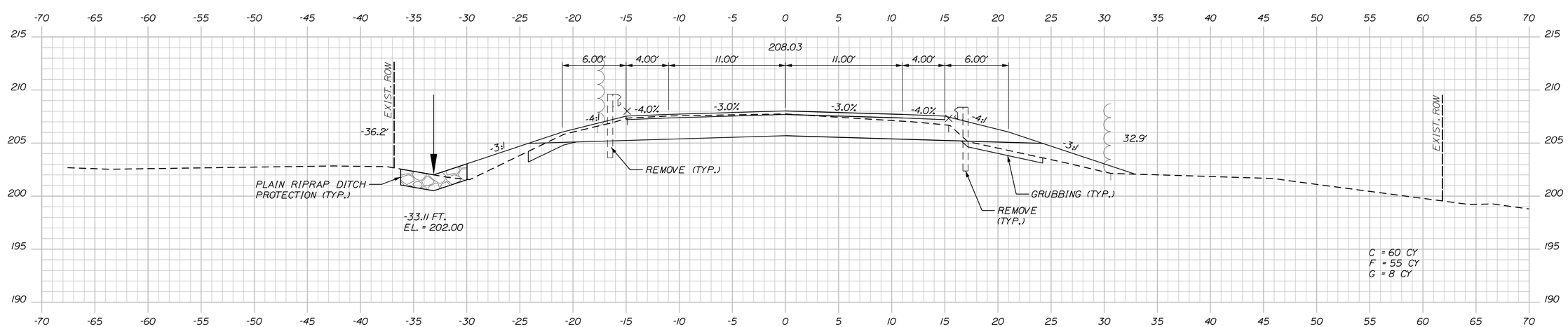

113+75.00

STATE OF MAINE
DEPARTMENT OF TRANSPORTATION

WIN
23693.00

HIGHWAY PLANS

PROJ. MANAGER	L. HAMILTON	BY	DATE
DESIGN-DETAILED	T. LANDRY	T. WARREN	11\23
CHECKED-REVIEWED	D. ETTINGER		11\23
DESIGN2-DETAILED2			
DESIGN3-DETAILED3			
REVISIONS 1			
REVISIONS 2			
REVISIONS 3			
REVISIONS 4			
FIELD CHANGES			

SIGNATURE

P.E. NUMBER

DATE

NORTH YARMOUTH
ROUTE 115

CROSS SECTIONS

SHEET NUMBER
15
OF 17

Sta. 113+75.00 to Sta. 114+25.00

Filename: ...\Z - CAD\00\Highway\Xsect.dgn Division: HIGHWAY Username: Jeff.Fitzmaurice Date:11/9/2023

U:\3571-North Yarmouth Route 115 Culvert\Z - CAD\00\Highway\Xsect.dgn

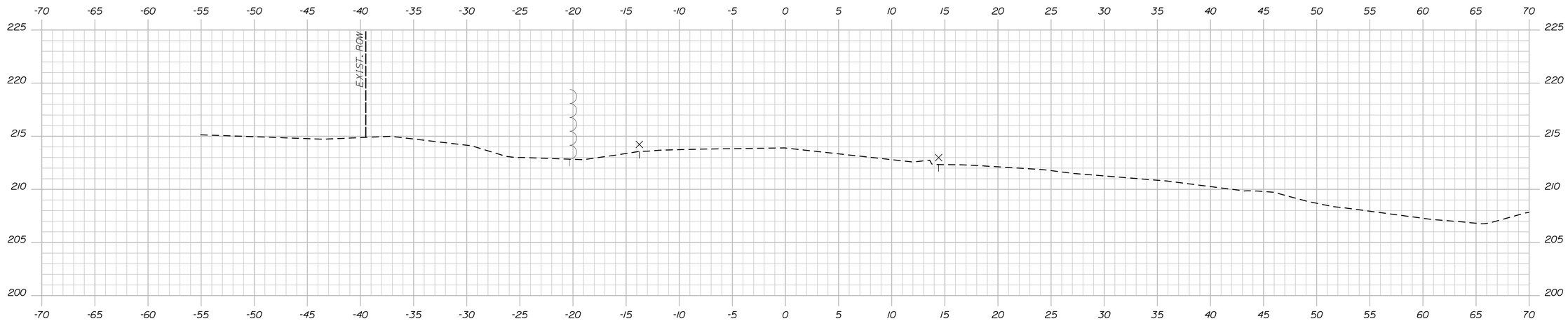

115+00.00

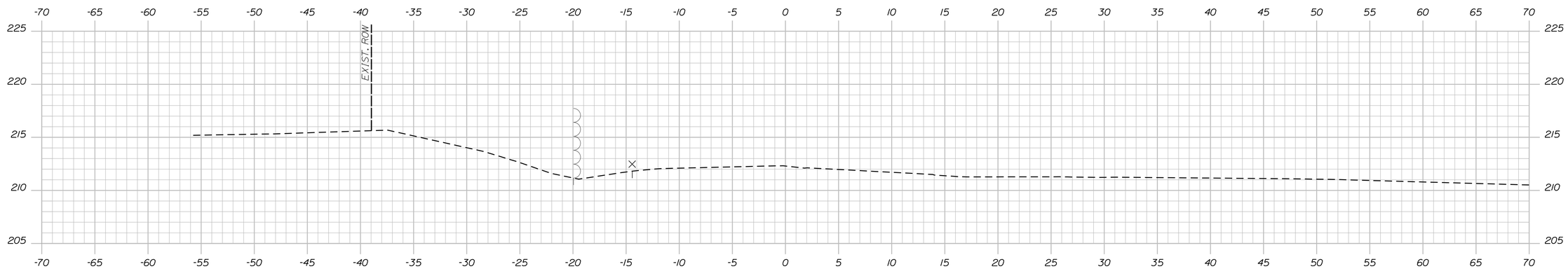

114+75.00

STA. 114+70.27 ROUTE 115 (GRAY ROAD) =
STA. 20+00.00 MILL ROAD

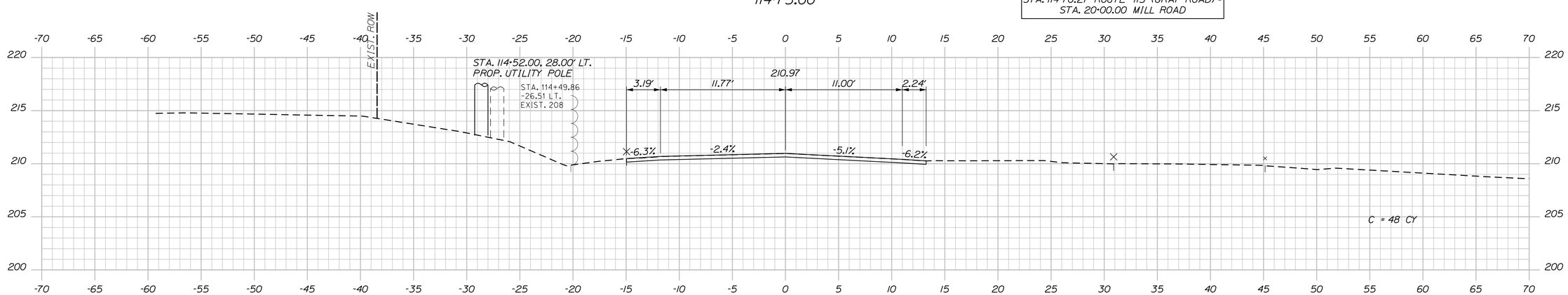

114+50.00

STA 114+50.00
END TRANSITION
MATCH EXISTING
LIMIT OF WORK

STATE OF MAINE
DEPARTMENT OF TRANSPORTATION

HIGHWAY PLANS

WIN
23693.00

PROJ. MANAGER	L. HAMILTON	BY	DATE
DESIGN-DETAILED	T. LANDRY	T. WARREN	11\23
CHECKED-REVIEWED	D. ETTINGER		11\23
DESIGN2-DETAILED2			
DESIGN3-DETAILED3			
REVISIONS 1			
REVISIONS 2			
REVISIONS 3			
REVISIONS 4			
FIELD CHANGES			

SIGNATURE

P.E. NUMBER

DATE

NORTH YARMOUTH
ROUTE 115

CROSS SECTIONS

SHEET NUMBER
16
OF 17

Filename: ...\Z - CAD\00\Highway\Xsect.dgn Division: HIGHWAY Username: Jeff.Fitzmaurice Date:11/9/2023

U:\3571-North Yarmouth Route 115 Culvert\Z - CAD\00\Highway\Xsect.dgn

Sta. 114+50.00 to Sta. 115+00.00

PLAN LEGEND

Town, County, State
Approx. Property Lines — P.L.
Existing Right of Way
Limits of Wrought Portion — L.O.W.P.
Control Of Access — C.O.A.
New Right of Way
New Easement
New Temporary Rights
New R/W Within Existing R/W

New R/W Along Existing R/W
Building — Clearing Limit Line
Trees — Conifer — Deckduous
Tree Line — Bush Line
Water Edge
Ledge — Rock/Boulder — Flag Pole
Fence — CHAIN LINK — BARB WIRE — STOCKADE
Sign — Well — BELL — Mailbox

	Existing	Proposed
Sanitary Sewer		
Telephone Line		
Electric Line		
Water Line		
Underdrain Line		
Gas Line		
Guardrail		
Culvert		

	Existing	Proposed
Traveled Way		
Ditch		
Catch Basin		
Manhole		
Sewer Manhole		
Utility Pole		
Fire Hydrant		
Curbing		

Cut Line — Fill Line
Stonewall — Retaining Wall
Baseline — 10+00 — 11+00 — 12+00
Monument — Traverse Point
Iron Rod Found — IRF — Pipe Found — IPF
Replacement Pin Set

THIS PLAN WAS PREPARED IN CONNECTION WITH THE DEPARTMENT'S ACQUISITION OF REAL PROPERTY FOR TRANSPORTATION PURPOSES. IT CANNOT BE USED TO ESTABLISH LEGAL BOUNDARIES BETWEEN ABUTTING PROPERTY OWNERS.

25 0 25 50 75 100
Scale of Feet

STATE OF MAINE
REGISTRY OF DEEDS

COUNTY _____
RECEIVED _____, _____
at _____h_____m_____M and
recorded in Plan Bk _____, Pg. _____
Attest: _____
REGISTER

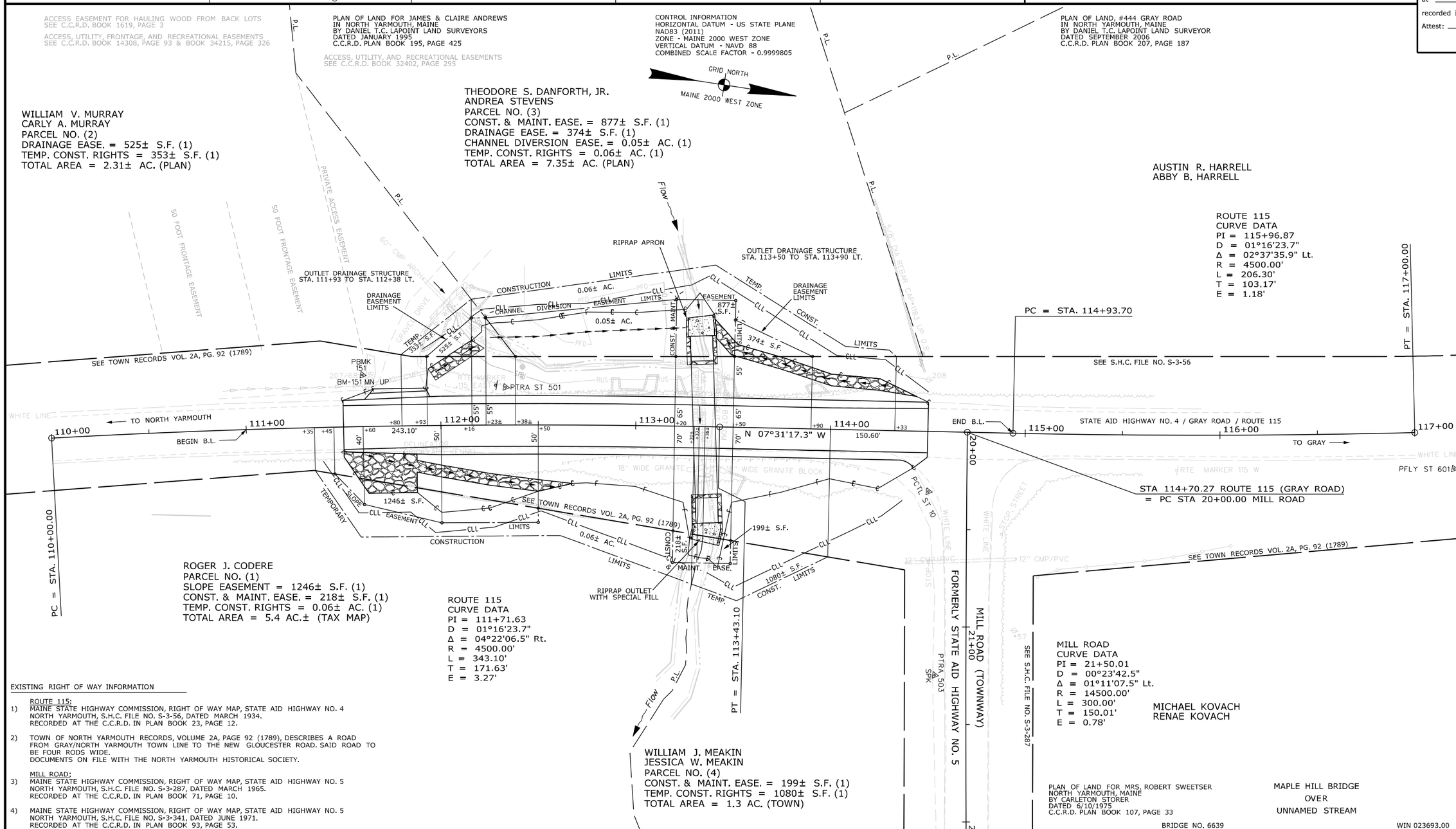

EXISTING RIGHT OF WAY INFORMATION

ROUTE 115:
1) MAINE STATE HIGHWAY COMMISSION, RIGHT OF WAY MAP, STATE AID HIGHWAY NO. 4 NORTH YARMOUTH, S.H.C. FILE NO. S-3-56, DATED MARCH 1934. RECORDED AT THE C.C.R.D. IN PLAN BOOK 23, PAGE 12.

2) TOWN OF NORTH YARMOUTH RECORDS, VOLUME 2A, PAGE 92 (1789), DESCRIBES A ROAD FROM GRAY/NORTH YARMOUTH TOWN LINE TO THE NEW GLOUCESTER ROAD. SAID ROAD TO BE FOUR RODS WIDE. DOCUMENTS ON FILE WITH THE NORTH YARMOUTH HISTORICAL SOCIETY.

MILL ROAD:
3) MAINE STATE HIGHWAY COMMISSION, RIGHT OF WAY MAP, STATE AID HIGHWAY NO. 5 NORTH YARMOUTH, S.H.C. FILE NO. S-3-287, DATED MARCH 1965. RECORDED AT THE C.C.R.D. IN PLAN BOOK 71, PAGE 10.

4) MAINE STATE HIGHWAY COMMISSION, RIGHT OF WAY MAP, STATE AID HIGHWAY NO. 5 NORTH YARMOUTH, S.H.C. FILE NO. S-3-341, DATED JUNE 1971. RECORDED AT THE C.C.R.D. IN PLAN BOOK 93, PAGE 53.

ITEM	TECH	CHECKED
EXISTING CONDITION PLAN	R.M.C.	C.W.K.
FINAL RIGHT OF WAY	J.H.	B.D.M.
AREAS	J.H.	C.J.C.

STATE OF MAINE
DEPARTMENT OF TRANSPORTATION
16 STATE HOUSE STATION - AUGUSTA, ME 04333-0016 - 207-624-3460
NORTH YARMOUTH
RIGHT OF WAY MAP

REVISIONS

NO.	DATE	DESCRIPTION	BY

PLAN FILED IN PLAN BOOK PAGE COUNTY RECORD

NO.	GRANTOR	INSTRUMENT	DATE	BOOK	PAGE
		COND.	01-17-23	39945	97

BRUCE A. VAN NOTE
COMMISSIONER
JOYCE NOEL TAYLOR
CHIEF ENGINEER
DATE

STATE AID HIGHWAY NO. 4
ROUTE 115 / GRAY ROAD
NORTH YARMOUTH CUMBERLAND COUNTY
STATE PROJECT NO. 23693.00

OCTOBER 2022 | RIGHT-OF-WAY MAP | D.O.T. FILE. NO. 3-667
SCALE 1" = 25' | SHEET 1 OF 1

SHEET NUMBER
17
OF 17

Date:4/6/2023
Username: Jude.Hogan
Division: ROW
Filename: ...\00\ROW\MSTA\017_RWPLAN1.dgn