STATE OF MAINE
DEPARTMENT OF TRANSPORTATION

SPECIFICATIONS

Design: Load and Resistance Factor Design per AASHTO LRFD Bridge Design Specifications, Ninth Edition 2020

DESIGN LOADING

Live Load ..... HL - 93 Modified for Strength I

TRAFFIC DATA

Current (2021) AADT	9,690
Future (2041) AADT	10,660
DHV - % of AADT	15%
Design Hour Volume	1,599
Heavy Trucks (% of AADT)	6%
Heavy Trucks (% of DHV)	2%
Directional Distribution (% of DHV)	62%
18 kip Equivalent P 2.0	218
18 kip Equivalent P 2.5	208
Design Speed (mph)	35

HYDROLOGIC DATA

Drainage Area	3.4 sq mi
Design Discharge (Q50)	285 cfs
Check Discharge (Q100)	333 cfs
Mean Lower Low Water (MLLW)	-5.97 ft
Mean Low Water (MLW)	-5.59 ft
Mean Tide Level (MTL)	-0.31 ft
Mean High Water (MHW)	4.98 ft
Mean Higher High Water (MHHW)	5.4 ft
Highest Astronomical Tide	7.2 ft
2019 Predicted High Tide	7.72 ft

MATERIALS

Concrete:	
Curb & Sidewalk	Class "LP"
Precast NEXT Beams	Class "P"
All Other	Class "A"
Reinforcing Steel	
Plain	ASTM A 615/A 615M, Grade 60
Low-Carbon Chromium Reinforcing	ASTM A 1035, Grade 100
Glass Fiber Reinforcing Polymer (GFRP)	ASTM D7957
Prestressing Strands	AASHTO M 203 (ASTM A416), Grade 270, Low Relaxation
Steel H-Piles	ASTM A 572, Grade 50

BASIC DESIGN STRESSES

Concrete:	
Class "A"	f 'c = 4,000 psi
Class "LP"	f 'c = 5,000 psi
Class "P"	f 'c = 8,000 psi
	f 'ci = 6,500 psi
Reinforcing:	
Plain Reinforcing Steel	f y = 60,000 psi
Low-Carbon Chromium Reinforcing	f y = 100,000 psi
Glass Fiber Reinforced Polymer	
#6 Bar	f fu = 100,000 psi
Minimum Elastic Modulus	E f = 6,500,000 psi
Minimum Nominal Design Tensile Strain	e fu = 1.1%
Prestressing Strand	F µ = 270,000 psi
Structural Steel:	
Steel H-Piles	F y = 50,000 psi

MOUNT DESERT
HANCOCK COUNTY
BABSON BRIDGE
OVER
KITTEREDGE BROOK
ROUTE 3\198
PROJECT NO. 2351500
PROJECT LENGTH 0.11 mi.
BRIDGE NO. 5244

LIST OF DRAWINGS

Title Sheet	1
Estimated Quantities	2
General Construction Notes	3
Plan	4
Profile	5
Boring Location Plan	6
Interpretive Subsurface Profiles	7
Boring Logs	8-9
Geometric Sheet	10
Typical Sections	11
Cross Sections	12-23
Abutment No. 1 Plan and Elevation	24
Abutment No. 1 Reinforcement	25
Abutment No. 2 Plan and Elevation	26
Abutment No. 2 Reinforcement	27
Superstructure Plan	28
Steel Approach Railing 4-Bar	29
Foundation For Reset Building	30
Reinforcing Steel Schedule	31
Right of Way Map	32
Utility Plans - Town of Mount Desert	G-1, C-1 - C-5, S-1, E-1 - E-3

UTILITIES

Versant Power
Spectrum
Town of Mount Desert
Fairpoint (Northern New England Telephone Operation LLC) dba: Consolidated Communications

MAINTENANCE OF TRAFFIC

Maintain two - way traffic and pedestrian sidewalk using on site special detour.

PROJECT LOCATION:	Route 3/198 over Kitteredge Brook in Mount Desert, 0.09 Miles East of Route 102. Latitude 44°22'9" N Longitude 68°19'44" W
PROGRAM AREA:	Bridge Program
OUTLINE OF WORK:	Bridge Replacement

WIN 023515.00

02351500

STATE OF MAINE
DEPARTMENT OF TRANSPORTATION

APPROVED	DATE
COMMISSIONER:	10-7-24
CHIEF ENGINEER:	10-7-2024

STATE OF MAINE · KEITH S. WOOD · No. 10423 · PROFESSIONAL ENGINEER

SIGNATURE 10423	P.E. NUMBER	DATE 9/26/2024

PROJECT INFORMATION

PROGRAM	BRIDGE	
PROJECT MANAGER	DENVER SMALL	
DESIGNER	K. WOOD	
CONSULTANT	KLEINFELDER	
PROJECT RESIDENT		
CONTRACTOR		
PROJECT COMPLETION DATE		DATE

MOUNT DESERT
BABSON BRIDGE

TITLE SHEET

SHEET NUMBER
1
OF 32

Date:9/25/2024 Username: Division: BRIDGE Filename:\BRIDGE\MSTA\001_Title.dgn

ESTIMATED QUANTITIES			
ITEM NO.	DESCRIPTION	QUANTITY	UNIT
201.23	REMOVING SINGLE TREE TOP ONLY	10	EA
201.24	REMOVING STUMP	15	EA
202.110	REMOVING, STORING, AND RESETTING STRUCTURES	1	EA
202.15	REMOVE EXISTING MANHOLE	2	EA
202.19	REMOVING EXISTING BRIDGE (650 CY)	1	LS
202.202	REMOVING PAVEMENT SURFACE	350	SY
202.61	REMOVE SEWER PIPE	1	LS
203.20	COMMON EXCAVATION	790	CY
203.2318	DISPOSAL OF SPECIAL WASTE	330	T
203.24	COMMON BORROW	25	CY
203.25	GRANULAR BORROW	240	CY
206.082	STRUCTURAL EARTH EXCAVATION - MAJOR STRUCTURES PLAN QUANTITY	550	CY
304.10	AGGREGATE SUBBASE COURSE - GRAVEL	1150	CY
304.14	AGGREGATE BASE COURSE - TYPE A	5	CY
403.2081	HOT MIX ASPHALT, 12.5 MM NOMINAL MAXIMUM SIZE (POLYMER MODIFIED)	180	T
403.209	HOT MIX ASPHALT, 9.5 MM NOM. MAX. SIZE (SIDEWALKS, DRIVES, & INCID.)	40	T
403.2131	HOT MIX ASPHALT, 12.5 MM NOM. MAX. SIZE (BASE AND INTER. POL. MOD.)	340	T
409.15	BITUMINOUS TACK COAT APPLIED	220	GAL
461.131	TEMPORARY PAVEMENT	380	T
501.231	DYNAMIC LOADING TEST	1	EA
501.46	STEEL H-BEAM PILES 73 LBS/FT, DELIVERED	325	LF
501.461	STEEL H-BEAM PILES 73 LBS/FT, IN PLACE	150	LF
501.492	STEEL W-BEAM, DELIVERED & INSTALLED	97	LF
501.502	ROCK SOCKETED H-PILES	125	LF
501.804	DRILLING EQUIPMENT MOBILIZATION	1	LS
501.90	PILE TIPS	5	EA
501.92	PILE DRIVING EQUIPMENT MOBILIZATION	1	LS
502.219	STRUCTURAL CONCRETE, ABUTMENTS AND RETAINING WALLS (101 CY)	1	LS
502.31	STRUCTURAL CONCRETE APPROACH SLAB (24 CY)	1	LS
502.49	STRUCTURAL CONCRETE CURBS AND SIDEWALKS (18 CY)	1	LS
502.608	STRUCTURAL CONCRETE, MISC. BUILDING FOUNDATION	1	LS
503.12	REINFORCING STEEL, FABRICATED AND DELIVERED	4200	LB
503.13	REINFORCING STEEL, PLACING	4200	LB
503.19	LOW-CARBON CHROMIUM REINFORCEMENT, FABRICATED AND DELIVERED	13600	LB
503.20	LOW-CARBON CHROMIUM REINFORCEMENT, PLACING	13600	LB
507.08161	STEEL APPROACH RAILING, 4 BAR	2	EA
507.0821	STEEL BRIDGE RAILING, 3 BAR (59 LF)	1	LS
507.0822	STEEL APPROACH RAILING, 3 BAR	2	EA
507.0831	STEEL BRIDGE RAILING, 4 BAR (59 LF)	1	LS
508.14	HIGH PERFORMANCE WATERPROOFING MEMBRANE (245 SY)	1	LS
510.12	SPECIAL DETOUR, 22 FOOT ROADWAY WIDTH VEHIC. & PED. TRAFFIC SEP.	1	LS
511.07	COFFERDAM: ABUTMENT NO. 1	1	LS
511.07	COFFERDAM: ABUTMENT NO. 2	1	LS
515.21	PROTECTIVE COATING FOR CONCRETE SURFACES (500 SY)	1	LS
526.301	PORTABLE CONCRETE BARRIER TYPE 1 (200 LF)	1	LS
527.34	WORK ZONE CRASH CUSHIONS	4	UN
531.511	BRIDGE SUPERSTRUCTURE - DETAIL BUILD	1	LS
603.169	15" CULVERT PIPE OPTION III	70	LF
603.179	18" CULVERT PIPE OPTION III	113	LF
604.152	48" MANHOLE	4	EA
604.252	CATCH BASIN TYPE A5-C	4	EA
605.09	6" UNDERDRAIN TYPE B	340	LF
605.11	12" UNDERDRAIN TYPE C	130	LF
606.1301	31" W-BEAM GUARDRAIL - MID-WAY SPLICE - SINGLE FACED	325	LF
606.1303	31" W-BEAM GUARDRAIL - MID-WAY SPLICE - 15' RADIUS AND LESS	50	LF
606.1305	31" W-BEAM GUARDRAIL - MID-WAY SPLICE FLARED TERMINAL	1	EA
606.1721	BRIDGE TRANSITION - TYPE 1	4	EA
606.265	TERMINAL END-SINGLE RAIL - GALVANIZED STEEL	3	EA
606.353	REFLECTORIZED FLEXIBLE GUARDRAIL MARKER	8	EA
607.1601	TEMPORARY CHAIN LINK FENCE - 4 FT	75	LF
607.24	REMOVE AND RESET FENCE	40	LF
608.26	CURB RAMP DETECTIBLE WARNING FIELD	24	SF
608.62	GENERATOR PAD	1	LS
609.11	VERTICAL CURB TYPE 1	413	LF
609.23	TERMINAL CURB TYPE 1	1	EA
609.234	TERMINAL CURB TYPE 1 - 4 FOOT	1	EA
609.238	TERMINAL CURB TYPE 1 - 8 FOOT	4	EA
610.08	PLAIN RIPRAP	50	CY
610.16	HEAVY RIPRAP	1200	CY
610.18	STONE DITCH PROTECTION	25	CY
613.319	EROSION CONTROL BLANKET	60	SY
615.07	LOAM	52	CY
618.13	SEEDING METHOD NUMBER 1	3	UN
618.14	SEEDING METHOD NUMBER 2	6	UN
619.12	MULCH	8	UN
619.14	EROSION CONTROL MIX	110	CY
620.58	EROSION CONTROL GEOTEXTILE	1670	SY
620.66	DRAINAGE GEOCOMPOSITE	82	SY
626.421	24-INCH DIAMETER FOUNDATION	14	LF
627.733	4 INCH WHITE OR YELLOW PAVEMENT MARKING LINE	2300	LF
627.75	WHITE OR YELLOW PAVEMENT & CURB MARKING	96	SF

ESTIMATED QUANTITIES			
ITEM NO.	DESCRIPTION	QUANTITY	UNIT
627.77	REMOVE EXISTING PAVEMENT MARKING	240	SF
627.78	TEMPORARY 4" PAINTED PAVEMENT MARKING LINE, WHITE OR YELLOW	1450	LF
629.05	HAND LABOR STRAIGHT TIME	40	HR
631.12	ALL PURPOSE EXCAVATOR (INCLUDING OPERATOR)	20	HR
631.14	GRADER (INCLUDING OPERATOR)	20	HR
631.15	ROLLER, EARTH AND BASE (INCLUDING OPERATOR)	20	HR
631.172	TRUCK - LARGE (INCLUDING OPERATOR)	20	HR
639.18	FIELD OFFICE - TYPE A	1	EA
643.6005	SOLAR POWERED LED SCHOOL ZONE BEACON - REMOVE AND REST	1	EA
643.62	RECTANGULAR RAPID FLASHING BEACON	1	EA
652.312	TYPE III BARRICADES	6	EA
652.33	DRUM	50	EA
652.34	CONE	50	EA
652.35	CONSTRUCTION SIGNS	350	SF
652.361	MAINTENANCE OF TRAFFIC CONTROL DEVICES	1	LS
652.38	FLAGGERS	800	HR
652.41	PORTABLE-CHANGEABLE MESSAGE SIGN	3	EA
655.01	GENERATOR SYSTEM	1	LS
655.201	ELECTRICAL WORK	1	LS
656.75	TEMPORARY SOIL EROSION AND WATER POLLUTION CONTROL	1	LS
659.10	MOBILIZATION	1	LS
801.03	TEST PITS	2	EA
801.071	TEMPORARY SEWER BYPASS	1	LS
806.50	CONTROL PANEL AND RELATED ITEMS	1	EA
810.20	BURIED 8" SANITARY SEWER	190	LF
812.163	MODIFY SEWER MANHOLE, ADJUST FRAME & COVER	1	EA
827.331	TRENCH INSULATION 2" RIGID	400	SY
827.3641	REMOVE AND DISPOSE ASBESTOS CEMENT PIPE	40	LF
830.13	SEWER MAIN BRIDGE CROSSING (97 LF)	1	LS
832.07	OWNER'S TESTING ALLOWANCE	1	LS
841.47	STEEL BOLLARD	5	EA

STATE OF MAINE
DEPARTMENT OF TRANSPORTATION

02351500

WIN 023515.00

BRIDGE NO. 5244

BRIDGE PLANS

STATE OF MAINE KEITH S. WOOD LICENSED PROFESSIONAL ENGINEER

Keith S. Wood 7/01/24

SIGNATURE

P.E. NUMBER 10423

9/26/2024

DATE

PROJ. MANAGER	DENVER SMALL	BY	DATE
DESIGN-DETAILED	K. WOOD	K. WOOD	4/2024
CHECKED-REVIEWED	A. FLOREN	M. KELLY	4/2024
DESIGN2-DETAILED2	------	------	------
DESIGN3-DETAILED3	------	------	------
REVISIONS 1	------	------	------
REVISIONS 2	------	------	------
REVISIONS 3	------	------	------
REVISIONS 4	------	------	------
FIELD CHANGES	------	------	------

BABSON BRIDGE
KITTEREDGE BROOK
MOUNT DESERT HANCOCK COUNTY

ESTIMATED QUANTITIES

SHEET NUMBER
2
OF 32

Filename: ...\002_Estimated Quantities.dgn Division: BRIDGE Username: Date:9/25/2024

GENERAL CONSTRUCTION NOTES

1. For easements, construction limits, and right of way lines, refer to the Right of Way Map.

2. The clearing limits as shown on the plans are approximate. The exact limits will be established in the field by the Resident. Payment for clearing will be considered incidental to Contract items.

3. All utility facilities shall be adjusted by the respective utilities unless otherwise noted.

4. Existing signs within the Project limits shall be removed and reset as directed by the Resident. Payment for removal and reinstallation of existing signs will be considered incidental to the Contract. No separate payment will be made.

5. Do not excavate for Aggregate Subbase Course where existing material is suitable as determined by the Resident.

6. In areas where the Resident directs the Contractor not to excavate to the subgrade line shown on the plans, payment for removing existing pavement, grubbing, shaping, ditching, and compacting the existing subbase and layers of new subbase 6 inches or less thick will be made under appropriate equipment rental items.

7. All embankment material, except as otherwise shown, placed below EL. 6.0 shall be Granular Borrow meeting the requirements of Standard Specifications Subsection 703.19, Granular Borrow, for Material for Underwater Backfill.

8. Place riprap on sideslopes as shown on cross sections.

9. Construct the riprap shelf at each abutment at EL. 8.0.

10. Place loam 2 inches deep on all new or reconstructed sideslopes or as directed by the Resident.

11. Erosion Control Mix may be substituted in those areas normally receiving loam and seed as directed by the Resident. Placement shall be in accordance with Standard Specifications Section 619, Mulch. Payment will be made under Pay Item 619.14, Erosion Control Mix.

12. Place a 24 inch wide strip of Erosion Control Blanket on the sideslopes along the top of the riprap and behind the wingwalls.

13. Guardrail posts as shown in the Standard Details shall be modified from the indicated length of 7 feet to a length of 8 feet with an embedment of 5.25 feet. Payment will be considered incidental to the guardrail pay items.

14. A MASH compliant guardrail end treatment shall be installed concurrently with the placement of each section of beam guardrail.

15. Where it is apparent that runoff will cause continual erosion, Erosion Control Blanket, seeded gutters, riprap downspouts, and other gutters lined with Stone Ditch Protection shall be constructed after paving and shoulder work is completed. Payment will be made under the appropriate Contract items.

16. Protective Coating for Concrete Surfaces shall be applied to the following areas:

All exposed surfaces of concrete curbs and sidewalks.
All exposed surfaces of NEXT Beams.
Fascias down to the drip notch.
Top of abutment backwalls and wingwalls, and
To one foot below the ground on vertical walls against earth.

17. Project information referred to below may be accessed at the following MaineDOT web address: http://www.maine.gov/mdot/contractors/

18. No plans are available for the existing bridge.

19. Reports on hydrology and/or hydraulics applicable to the bridge site may be accessed at the MaineDOT web address. The reports are based on MaineDOT's interpretation of the information obtained for the subject site. No assurance is given that the information or the conclusions of the report will be representative of actual conditions at the time of construction.

20. The project geotechnical report titled: Geotechnical Design Report For: Replacement of Babson Bridge Over Kitteredge Brook (Bridge No. 5244) Route 3/198, WIN 23515.00 Mount Desert, Hancock County, Maine August 9, 2024 may be accessed at the MaineDOT web address.

21. Geotechnical information furnished or referred to in this plan set is for the use of the Bidders and the Contractor. No assurance is given that the information or interpretations will be representative of actual subsurface conditions at the construction site. MaineDOT will not be responsible for the Bidders' or Contractor's interpretations of, or conclusions drawn from, the geotechnical information. The boring logs contained in the plan set present factual and interpretive subsurface information collected at discrete locations. Data provided may not be representative of the subsurface conditions between the boring locations.

22. Parcel(s) #1, #2, #3, #4 and #5 are held in reserve as indicated in Special Provision 104 General Rights and Responsibilities (Reserved Limits).

23. Quantities included for pay items measured and paid for by Lump Sum are estimated quantities and are provided by MaineDOT for informational purposes only. Lump Sum pay items will be paid for at the Contract Bid amount, with no addition or reduction in payment to the Contractor if the actual final quantities are different from the MaineDOT provided estimated quantities, except as follows:

a. If a Lump Sum pay item is eliminated, the requirements of Standard Specifications Section 109.2, Elimination of Items, will take precedence.

b. If other Contract Documents specifically allow a change in payment for a Lump Sum pay item, those requirements will be followed.

c. If a design change results in changes to estimated quantities for Lump Sum pay items, price adjustments will be made in accordance with Standard Specifications Section 109.7, Equitable Adjustments to Compensation and Time.

24. The conceptual superstructure shown on the plans is a NEXT 28F precast, prestressed beam and shown for graphical purposes only. Refer to Special Provision 531 for superstructure types allowed as a detail build option.

25. The existing bridge shall be removed by and become the property of the Contractor. The steel portions of the existing bridge may be coated with a lead-based paint system. The Contractor is responsible for the containment, proper management and disposal of all lead-contaminated hazardous waste generated by the process of demolishing the bridge. The Contractor is responsible for implementing appropriate OSHA mandated personal protection standards related to this process. Once the existing bridge is removed, the Contractor is solely responsible for the care, custody, and control of the components of the existing bridge and any hazardous waste generated as a result of the storage, recycling, or disposal of the bridge components, including lead-coated steel. The Contractor shall recycle or reuse the steel in accordance with the Maine Department of Environmental Protection's "Maine Hazardous Waste Management Regulations," Chapter 850. A copy of this regulation is available at MaineDOT's offices on Child Street in Augusta. Payment for all labor, materials, equipment, and other costs required to remove and dispose of the existing bridge will be considered incidental to the bridge removal pay item.

26. Existing and proposed sanitary sewer work shown on the MaineDOT plan sheets is for informational purposes only. Refer to the Town of Mount Desert, Maine, Mount Desert Babson Bridge Sewer Replacement Plans Sheets (G-1, C-1 through C-5, S-1, E-1 through E-3) for all sanitary sewer work dimensions and layout.

27. Excavation required between the backside of the limits of Remove Existing Bridge and the front side of the proposed abutment shall be paid for as Structural Earth Excavation.

28. As plans of the existing bridge abutments are not available, the limit of structural excavation for removal of the existing bridge is assumed to be 11 feet behind the face of the existing abutments.

29. The existing oak trees at Station 13+76.45, Offset 60.09' Right and Station 13+79.37, Offset 60.67' Right shall remain. Any trimming of these two trees shall be as directed by the Resident.

30. All existing riprap excavated for construction of the bridge meeting the requirements of Sections 703.26 and 703.28 shall be reused on site. Erosion Control Geotextile will be required under all riprapped to be placed per the Standard Details, Section 610. Protective aggregate cushion shall be required in all fill sections and at the abutments.

31. The existing fence from Station 13+68.38, 31.79' Right to Station 14+07.59, 34.16' Right, shall be removed and reconstructed similar to how it is currently constructed. The wooden stockade fence panels shall be constructed level and the areas under the fence shall be infilled with stones salvaged from the existing fence. Any existing panels or posts that are rotten shall be replaced with new pressure treated panels and posts similar to the existing. Cost for replacement of rotten fence parts shall be considered incidental to Pay Item 607.24, Remove and Reset Fence.

32. The existing stream bed configuration that holds back water at low tide shall be maintained and not altered during and after construction.

33. The Contractor shall install a 4 foot high temporary chain link fence along the edge of the special detour on the east side of the river from the highwater line to Station 14+07.59, 34.16' Right. The temporary fence shall be constructed immediately after the removal of the existing wooden stockade fence from Station 13+68.38, 31.79' Right, to Station 14+07.59, 34.16' Right. The temporary fence shall remain in place until construction of the final slopes. The existing wooden stockade fence shall be reset as soon as possible after the final slope work is complete.

34. The existing fence at Station 11+50 Left shall be removed within the Right of Way. Payment will be incidental to the Contract.

35. Gravel walkway at Station 11+25± Right shall be constructed with: 12" Aggregate Base Gravel - Type A.

36. The Contractor shall install the following: new wooden service pole and power meter at Station 10+57.00, 40' Right, new underground and riser conduit and associated wire to connect to the new pole and meter to the existing communications line to the service pole at Station 10+49, 19.74' Right, and the existing underground power line to pole at Station 10+68.51, 29.37' Right. After the existing communications line has been transferred to the new pole, the contractor shall remove the existing communications service pole at Station 10+49, 19.74' Right. All work shall be in accordance with Sections 626, 634, and 645 and all other applicable Sections of the Standard Specifications. Payment for all work associated with the installation of the new service pole, meter, and associated conduit and wiring, and removal of the existing pole shall be incidental to Pay Item, 510.12 Special Detour, 22 Foot Roadway Width Vehicle and Pedestrian Traffic Separated.

STATE OF MAINE
DEPARTMENT OF TRANSPORTATION

02351500

WIN 023515.00

BRIDGE NO. 5244

BRIDGE PLANS

STATE OF MAINE KEITH S. WOOD No. 10423 LICENSED PROFESSIONAL ENGINEER

PROJ. MANAGER	DENVER SMALL	BY	DATE
DESIGN-DETAILED	K. WOOD	K. WOOD	4\2024
CHECKED-REVIEWED	A. FLOREN	M. KELLY	4\2024
DESIGN2-DETAILED2	------	------	------
DESIGN3-DETAILED3	------	------	------
REVISIONS 1	------	------	------
REVISIONS 2	------	------	------
REVISIONS 3	------	------	------
REVISIONS 4	------	------	------
FIELD CHANGES	------	------	------

SIGNATURE
P.E. NUMBER 10423
DATE 4/3/2024

BABSON BRIDGE
KITTEREDGE BROOK
MOUNT DESERT HANCOCK COUNTY

GENERAL CONSTRUCTION NOTES

SHEET NUMBER
3
OF 32

Filename: ...\MSTA\003_General_Notes.dgn Division: BRIDGE Username: Date:10/3/2024

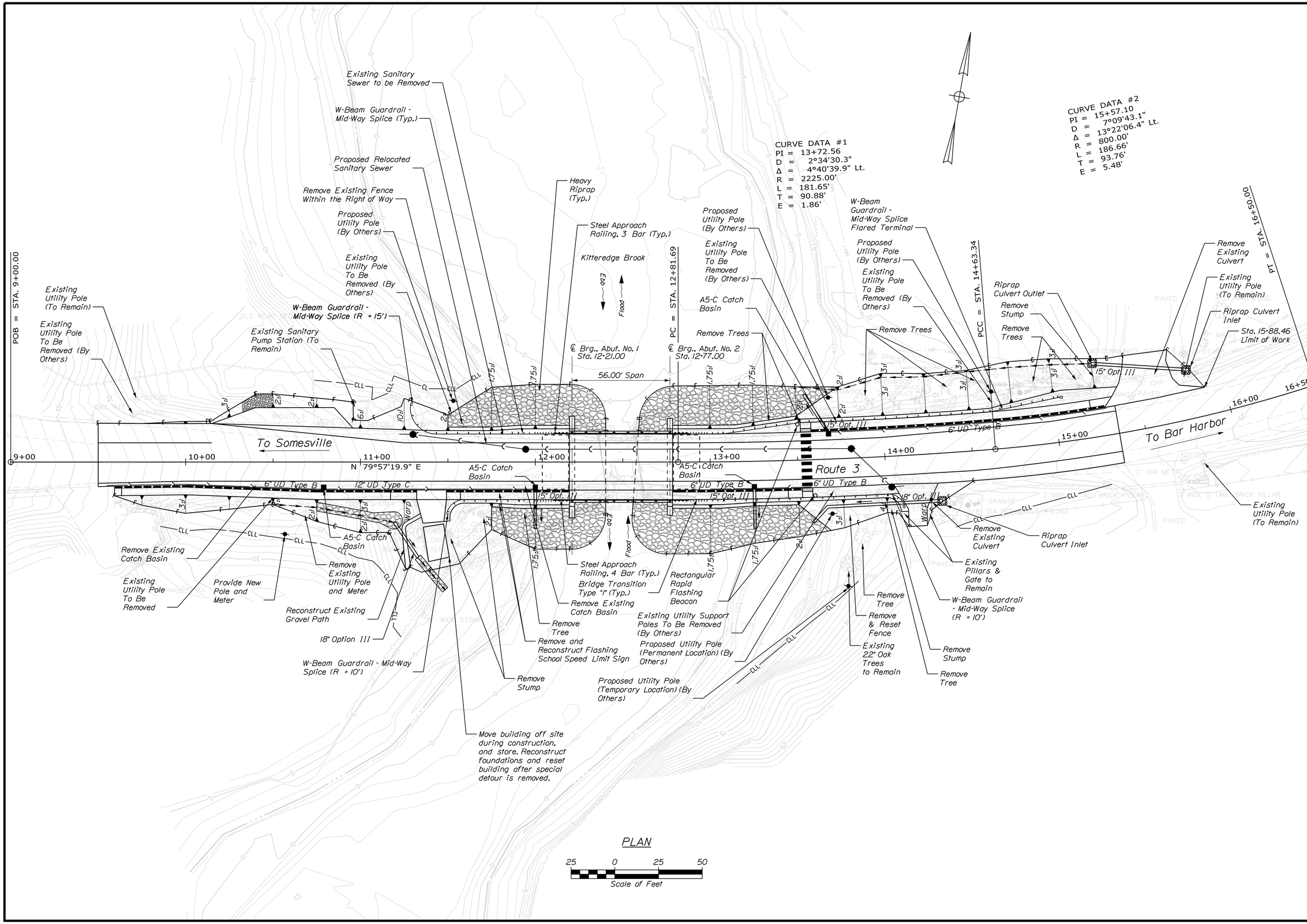

STATE OF MAINE
DEPARTMENT OF TRANSPORTATION

02351500

WIN 023515.00

BRIDGE NO. 5244

BRIDGE PLANS

STATE OF MAINE KEITH S. WOOD No. 10423 LICENSED PROFESSIONAL ENGINEER

	BY	DATE
PROJ. MANAGER	DENVER SMALL	
DESIGN-DETAILED	M. CRONIN	C. JONES	12\2022
CHECKED-REVIEWED	K. WOOD	S. HUBBARD	12\2022
DESIGN2-DETAILED2		
DESIGN3-DETAILED3		
REVISIONS 1		
REVISIONS 2		
REVISIONS 3		
REVISIONS 4		
FIELD CHANGES		

SIGNATURE

P.E. NUMBER 10423

DATE

BABSON BRIDGE
KITTEREDGE BROOK
MOUNT DESERT HANCOCK COUNTY

PLAN

SHEET NUMBER

4

OF 32

Filename: ...\BRIDGE\MSTA\004_Plan.dgn Division: BRIDGE Username: Date:9/25/2024

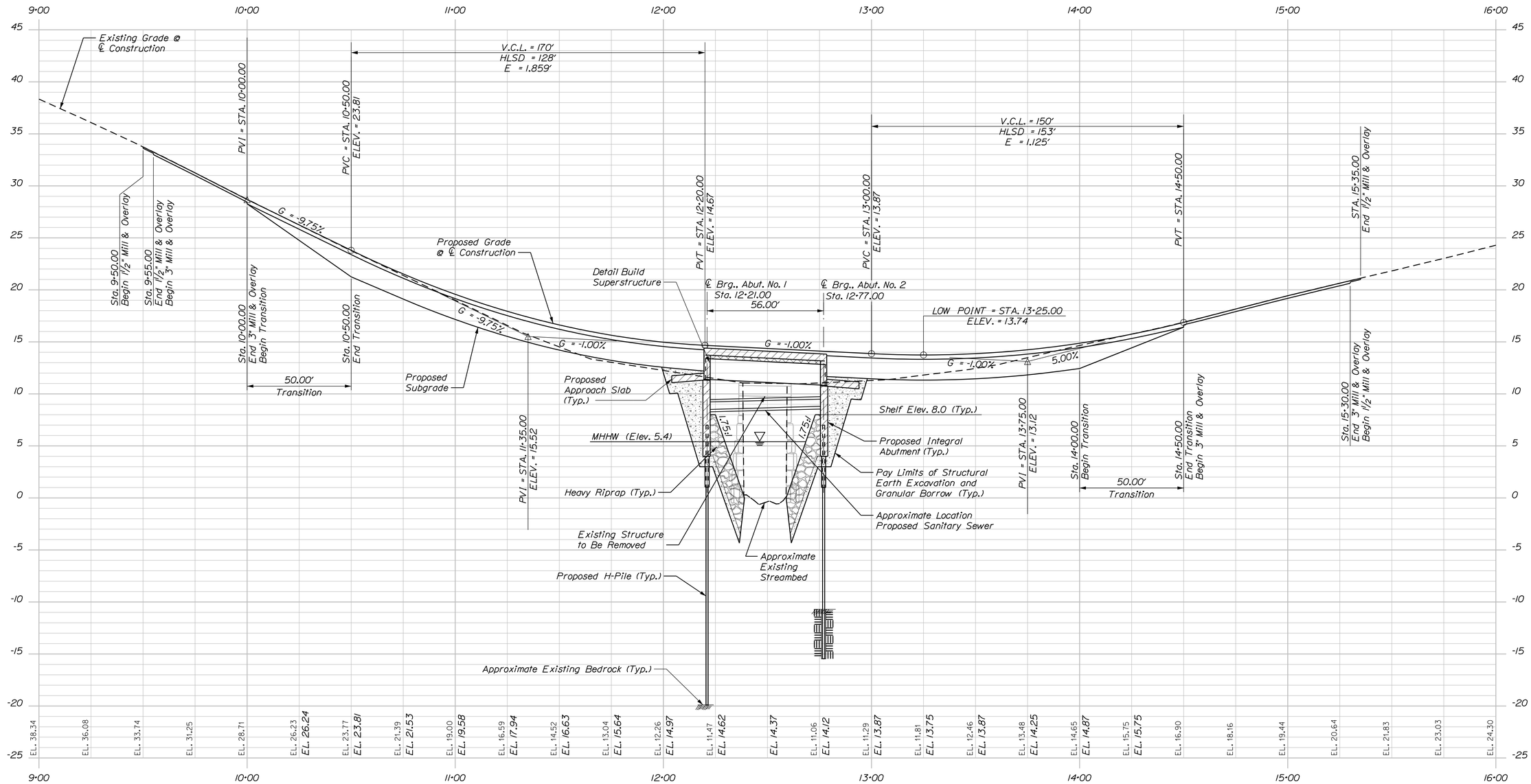

PROFILE

Horiz. 25 0 25 50

Vert. 5 0 5 10

Scale of Feet

STATE OF MAINE
DEPARTMENT OF TRANSPORTATION

02351500

WIN
023515.00

BRIDGE PLANS

BRIDGE NO. 5244

STATE OF MAINE
KEITH S. WOOD
No. 10423
LICENSED
PROFESSIONAL ENGINEER

P.E. NUMBER 10423

SIGNATURE

DATE 9/26/2024

PROJ. MANAGER	DENVER SMALL		
DESIGN-DETAILED	M. CRONIN	C. JONES	12/2022
CHECKED-REVIEWED	K. WOOD	S. HUBBARD	12/2022
DESIGN2-DETAILED2			
DESIGN3-DETAILED3			
REVISIONS 1			
REVISIONS 2			
REVISIONS 3			
REVISIONS 4			
FIELD CHANGES			

BABSON BRIDGE
KITTEREDGE BROOK
MOUNT DESERT HANCOCK COUNTY

PROFILE

SHEET NUMBER

5

OF 32

Filename: ...\BRIDGE\MSTA\005_Profile.dgn Division: BRIDGE Username: Date:9/25/2024

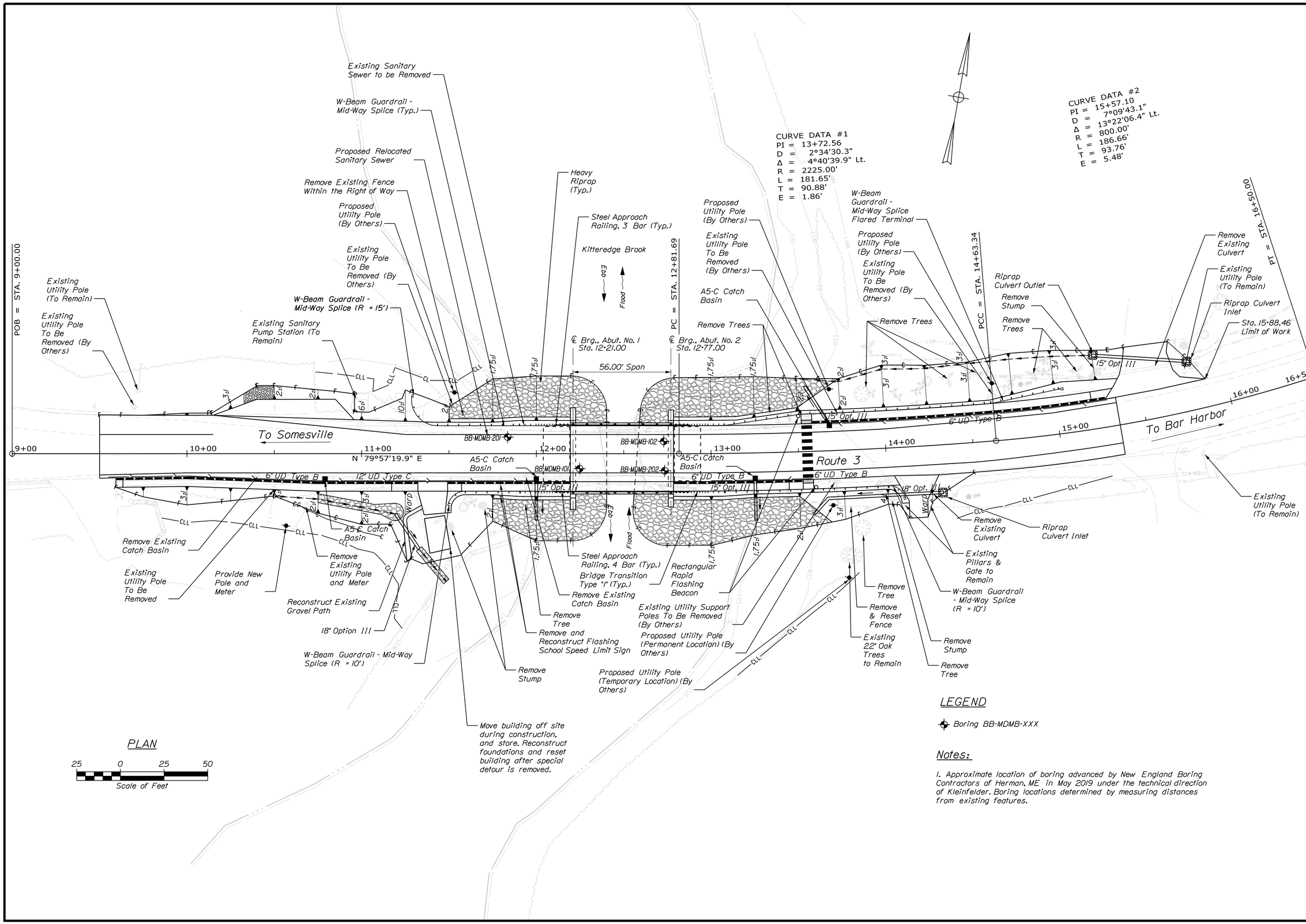

LEGEND

Boring BB-MDMB-XXX

Notes:

1. Approximate location of boring advanced by New England Boring Contractors of Herman, ME in May 2019 under the technical direction of Kleinfelder. Boring locations determined by measuring distances from existing features.

STATE OF MAINE
DEPARTMENT OF TRANSPORTATION

2351500

WIN 23515.00

BRIDGE PLANS

BRIDGE NO. 5244

STATE OF MAINE
RUSSELL L. THOMAS, JR.
No. 18478
LICENSED PROFESSIONAL ENGINEER

SIGNATURE		
18478		P.E. NUMBER
10-1-2024		DATE

PROJ. MANAGER	DENVER SMALL	
DESIGN-DETAILED	E. WALTON	T. WOLFEL 1/2020
CHECKED-REVIEWED	K. WOOD	T. MARSHALL 1/2020
DESIGN2-DETAILED2		
DESIGN3-DETAILED3		
REVISIONS 1		
REVISIONS 2		
REVISIONS 3		
REVISIONS 4		
FIELD CHANGES		

BABSON BRIDGE
KITTEREDGE BROOK
MOUNT DESERT HANCOCK COUNTY

BORING LOCATION PLAN

SHEET NUMBER

6

OF 32

Filename: ...\MSTA\006_Foundation_Survey.dgn Division: BRIDGE Username: Date:9/25/2024

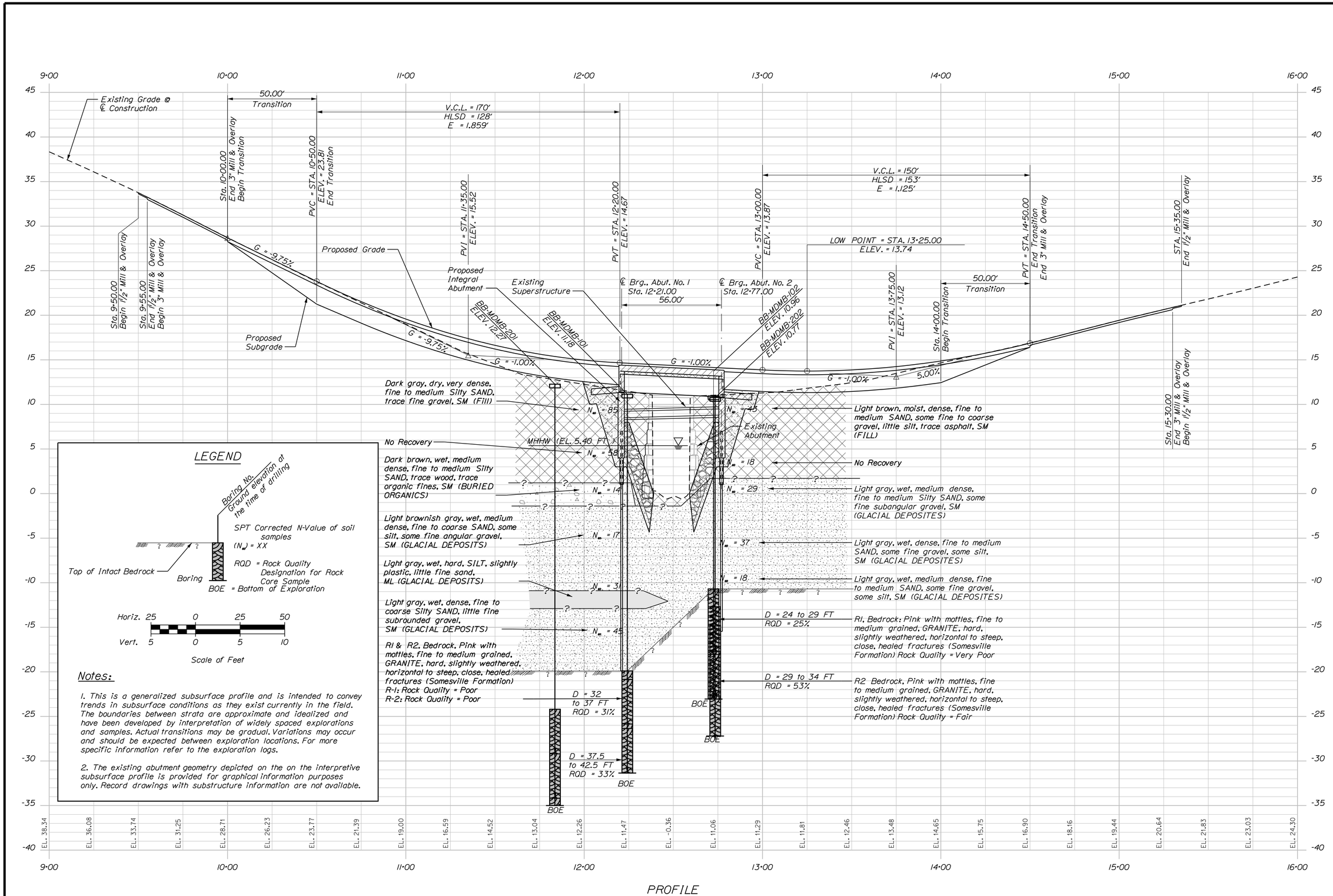

STATE OF MAINE
DEPARTMENT OF TRANSPORTATION

2351500

WIN 23515.00

BRIDGE NO. 5244

BRIDGE PLANS

STATE OF MAINE
RUSSELL L. THOMAS, JR.
No. 18478
LICENSED PROFESSIONAL ENGINEER

PROJ. MANAGER	DENVER SMALL	BY	DATE
DESIGN-DETAILED	E. WALTON	T. WOLFEL	1/2020
CHECKED-REVIEWED	K. WOOD	T. MARSHALL	1/2020
DESIGN2-DETAILED2			
DESIGN3-DETAILED3			
REVISIONS 1			
REVISIONS 2			
REVISIONS 3			
REVISIONS 4			
FIELD CHANGES			

SIGNATURE

P.E. NUMBER 18478

DATE 10-1-2024

BABSON BRIDGE
KITTEREDGE BROOK
MOUNT DESERT HANCOCK COUNTY

INTERPRETIVE SUBSURFACE PROFILE

SHEET NUMBER
7
OF 32

Filename: ...\007_Interpretive Subsurface Profile.dgn Division: BRIDGE Username: Date:9/25/2024

Date:9/25/2024 Username: Division: BRIDGE Filename: ...\MSTA\008_Boring Logs.dgn

Maine Department of Transportation
Soil/Rock Exploration Log
US CUSTOMARY UNITS

Project:	Babson Bridge (#5244) over Kitteredge Brook	Location:	Sound Drive, Mount Desert, ME	Boring No.:	BB-MDMB-101
				WIN:	23515.00
Driller:	New England Boring Contractor	Elevation (ft.)	11.18	Auger ID/OD:	
Operator:	Mike Porter	Datum:	NAVD88	Sampler:	SPT/Split spoon
Logged By:	M. Cheo	Rig Type:	Mobile Drill Truck-Mounted	Hammer Wt./Fall:	140lbs/30"
Date Start/Finish:	5/13/2019 - 5/14/2019	Drilling Method:	Drive and Wash/Coring	Core Barrel:	NQ (2" OD)
Boring Location:	STA. 12+24.78, 8.57 RT, N 195600.9542, E 2177864.8225	Casing ID/OD:	HW-4"	Water Level *:	5.5 ft at 7:50 AM on 5/14/19
Hammer Efficiency Factor:	0.923	Hammer Type:	Automatic ☒ Hydraulic ☐ Rope & Cathead ☐		

Definitions:
D = Split Spoon Sample; MD = Unsuccessful Split Spoon Sample Attempt; U = Thin Wall Tube Sample; MU = Unsuccessful Thin Wall Tube Sample Attempt; V = Field Vane Shear Test, PP = Pocket Penetrometer; MV = Unsuccessful Field Vane Shear Test Attempt
R = Rock Core Sample; SSA = Solid Stem Auger; HSA = Hollow Stem Auger; RC = Roller Cone; WOH = Weight of 140lb. Hammer; WOR/C = Weight of Rods or Casing; WO1P = Weight of One Person
S_u = Peak/Remolded Field Vane Undrained Shear Strength (psf); $S_{u(lab)}$ = Lab Vane Undrained Shear Strength (psf); q_p = Unconfined Compressive Strength (ksf); N-uncorrected = Raw Field SPT N-value; Hammer Efficiency Factor = Rig Specific Annual Calibration Value; N_{60} = SPT N-uncorrected Corrected for Hammer Efficiency; N_{60} = (Hammer Efficiency Factor/60%)*N-uncorrected
T_v = Pocket Torvane Shear Strength (psf); WC = Water Content, percent; LL = Liquid Limit; PL = Plastic Limit; PI = Plasticity Index; G = Grain Size Analysis; C = Consolidation Test

Sample No.	Pen./Rec. (in.)	Sample Depth (ft.)	Blows (/6 in.) Shear Strength (psf) or RQD (%)	N-uncorrected	N_{60}	Casing Blows
						SPIN HW
1D	24/10	1.00 - 3.00	23/11/44/27	55	85	
2D	24/0	5.00 - 7.00	14/29/9/12	38	58	
3D	24/6	10.00 - 12.00	9/5/4/6	9	14	
R1	24/24	12.50 - 14.50				NQ-2
4D	24/6	15.00 - 17.00	6/4/7/16	11	17	SPIN HW
5D	24/17	21.00 - 23.00	17/10/10/15	20	31	
6D	24/12	26.00 - 28.00	5/12/17/20	29	45	
R2	60/54	32.00 - 37.00	RQD = 31%			NQ-2
R3	60/54	37.50 - 42.50	RQD = 33%			

Depth (ft.)	Elevation (ft.)	Visual Description and Remarks	Laboratory Testing Results/AASHTO and Unified Class.
0.0		6.5" BITUMINOUS PAVEMENT	
0.5	10.6	1D: Top 5": Dark gray, dry, very dense, fine to medium Silty SAND, trace fine gravel, SM (FILL) Bottom 5": Light brown, moist, very dense, fine to medium SAND, little silt, little fine to coarse subangular gravel, SP-SM (FILL)	
		2D: No Recovery Drilling action was slow from 6 to 10 feet. Observed rock fragments in the drill water due to possible cobbles and boulders.	
10.0	1.2	3D: Dark brown, wet, medium dense, fine to medium Silty SAND, trace wood, trace organic fines, SM (BURIED ORGANICS)	
12.5	-1.3	R1: Boulder: min/ft: 2.0, 1.8 Switched to 3" casing at 14.5 feet and roller bit to 15 feet and sampled	
15.0	-3.8	4D: Light brownish gray, wet, medium dense, fine to coarse SAND, some silt, some fine angular gravel, SM (GLACIAL DEPOSITS)	% Silt = 27.7 % Sand = 41.1 % Gravel = 31.2 A-2-4
		Encountered possible cobbles at 20 feet. Spin casing down to 21 feet and sampled at 21 feet. 5D - Top 12": Similar to 4D, except dense (GLACIAL DEPOSITS)	
22.0	-10.8	Bottom 5": Light gray, wet, hard, SILT, slightly plastic, little fine sand, ML (GLACIAL DEPOSITS)	
24.0	-12.8	Assumed lithology change	
		6D: Light gray, wet, dense, fine to coarse Silty SAND, little fine subrounded gravel, SM (GLACIAL DEPOSITS)	% Silt = 40.4 % Sand = 42.6 % Gravel = 17 A-4
31.0	-19.8	Observed pink rock fragment in the drill cuttings at about 31 feet. Presumed top of rock. R2: Bedrock: Pink with black mottles, fine-medium grained, GRANITE, hard, slightly weathered, horizontal to steep, close, healed fractures Somesville Formation, RQD = 31%, poor, Rec = 54"/60" (90%) Rock core rates: 31 ft-32 ft (2:00), 32 ft-33 ft (2:00), 33 ft-34 ft (1:30), 34 ft-35 ft (1:48), 35 ft-36 ft (1:54)	
		Core barrel jammed at about 37 feet. Roller bit from 37 to 37.5 feet and cored at 37.5 feet. R3: Bedrock: Pink with black mottles, fine-medium grained, GRANITE, hard, slightly weathered, horizontal to steep, close, healed fractures Somesville Formation, RQD = 33%, poor, Rec = 54"/60" (90%) Rock core rates: 37.5 ft-38.5 ft (5:00), 38.5 ft-39.5 ft (1:48), 39.5 ft-40.5 ft (1:48), 40.5 ft-41.5 ft (2:0), 41.5 ft-42.5 ft (1:48)	
42.5	-31.3	Bottom of Exploration at 42.5 feet below ground surface. Backfilled borehole with drill cuttings and 10.5 bags of gravel. Restored ground surface with asphalt cold patch.	

Remarks:
Truck Mounted Mobile B-53 Drill Rig
NH License Plate No. 4368

Stratification lines represent approximate boundaries between soil types; transitions may be gradual.
* Water level readings have been made at times and under conditions stated. Groundwater fluctuations may occur due to conditions other than those present at the time measurements were made.

Page 2 of 2 Boring No.: BB-MDMB-101

Maine Department of Transportation
Soil/Rock Exploration Log
US CUSTOMARY UNITS

Project:	Babson Bridge (#5244) over Kitteredge Brook	Location:	Sound Drive, Mount Desert, ME	Boring No.:	BB-MDMB-102
				WIN:	23515.00
Driller:	New England Boring Contractor	Elevation (ft.)	10.96	Auger ID/OD:	
Operator:	Mike Porter	Datum:	NAVD88	Sampler:	SPT/Split spoon
Logged By:	M. Cheo	Rig Type:	Mobile Drill Truck-Mounted	Hammer Wt./Fall:	140lbs/30"
Date Start/Finish:	5/14/2019 - 5/15/2019	Drilling Method:	Drive and Wash/Coring	Core Barrel:	NQ (2" OD)
Boring Location:	STA. 12+72.89, 7.05 LT, N 195624.7329, E 2177909.4615	Casing ID/OD:	HW-4"	Water Level *:	5.8 ft at 7:50 AM on 5/15/19
Hammer Efficiency Factor:	0.923	Hammer Type:	Automatic ☒ Hydraulic ☐ Rope & Cathead ☐		

Definitions:
D = Split Spoon Sample; MD = Unsuccessful Split Spoon Sample Attempt; U = Thin Wall Tube Sample; MU = Unsuccessful Thin Wall Tube Sample Attempt; V = Field Vane Shear Test, PP = Pocket Penetrometer; MV = Unsuccessful Field Vane Shear Test Attempt
R = Rock Core Sample; SSA = Solid Stem Auger; HSA = Hollow Stem Auger; RC = Roller Cone; WOH = Weight of 140lb. Hammer; WOR/C = Weight of Rods or Casing; WO1P = Weight of One Person
S_u = Peak/Remolded Field Vane Undrained Shear Strength (psf); $S_{u(lab)}$ = Lab Vane Undrained Shear Strength (psf); q_p = Unconfined Compressive Strength (ksf); N-uncorrected = Raw Field SPT N-value; Hammer Efficiency Factor = Rig Specific Annual Calibration Value; N_{60} = SPT N-uncorrected Corrected for Hammer Efficiency; N_{60} = (Hammer Efficiency Factor/60%)*N-uncorrected
T_v = Pocket Torvane Shear Strength (psf); WC = Water Content, percent; LL = Liquid Limit; PL = Plastic Limit; PI = Plasticity Index; G = Grain Size Analysis; C = Consolidation Test

Sample No.	Pen./Rec. (in.)	Sample Depth (ft.)	Blows (/6 in.) Shear Strength (psf) or RQD (%)	N-uncorrected	N_{60}	Casing Blows
						SPIN HW
1D	24/12	1.00 - 3.00	37/17/11/17	28	43	
2D	24/0	6.00 - 8.00	9/5/7/10	12	18	
3D	24/4	9.30 - 11.30	5/12/7/11	19	29	
4D	24/6	15.00 - 17.00	4/12/12/13	24	37	
5D	19/15	19.00 - 20.58	6/2/10/(60/1)	12	18	
R1	60/60	24.00 - 29.00	RQD = 25%			NQ-2
R2	60/55	29.00 - 34.00	RQD = 53%			

Depth (ft.)	Elevation (ft.)	Visual Description and Remarks	Laboratory Testing Results/AASHTO and Unified Class.
0.0		6.5" BITUMINOUS PAVEMENT	
0.5	10.4	1D: Light brown, moist, dense, fine to medium SAND, some fine to coarse gravel, little silt, trace asphalt, SM (FILL) Drill rig chattered from 3 to 6 feet on possible cobbles and boulders.	% Silt = 19.7 % Sand = 52.5 % Gravel = 27.8 A-1-b
		2D: No Recovery, angular rock fragment in tip of spoon Drill rig chattered from 6 to 9.3 feet.	
9.3	1.7	3D: Light gray, wet, medium dense, fine to medium Silty SAND with Gravel, some fine subangular gravel, SM (GLACIAL DEPOSITS)	
		4D: Light gray, wet, dense, fine to medium SAND, some fine gravel, some silt, SM (GLACIAL DEPOSITS)	% Silt = 26.2 % Sand = 45.2 % Gravel = 30.6 A-2-4
		5D: Similar to 4D except medium dense, some fine gravel, angular rock fragment at tip of spoon (GLACIAL DEPOSITS)	
21.6	-10.6	Observed pink rock fragments in the drill cuttings from 21.6 to 24 feet. Presumed top of rock at 21.6 feet.	
		R1: Bedrock: Pink with black mottles, fine to medium-grained, GRANITE, hard, slightly weathered, horizonal to steep, close, healed fractures Somesville Formation, RQD = 25%, very poor, Rec = 60"/60" (100%) Rock core rates: 24 ft-25 ft (6:30), 25 ft-26 ft (3:24), 26 ft-27 ft (2:54), 27 ft-28 ft (2:54), 28 ft-29 ft (2:36)	
		R2: Bedrock: Pink with black mottles, fine to medium-grained, GRANITE, hard, slightly weathered, horizonal to steep, close, healed fractures Somesville Formation, RQD = 53%, fair, Rec = 55.2"/60" (92%) Rock core rates: 29 ft-30 ft (2:42), 30 ft-31 ft (1:54), 31 ft-32 ft (2:12), 32 ft-33 ft (1:54), 33 ft-34 ft (1:30)	
34.0	-23.0	Bottom of Exploration at 34.0 feet below ground surface. Backfilled borehole with drill cuttings and 5 bags of gravel. Restored ground surface with asphalt cold patch.	

Remarks:
Truck Mounted Mobile B-53 Drill Rig
NH License Plate No. 4368

Stratification lines represent approximate boundaries between soil types; transitions may be gradual.
* Water level readings have been made at times and under conditions stated. Groundwater fluctuations may occur due to conditions other than those present at the time measurements were made.

Page 2 of 2 Boring No.: BB-MDMB-102

Maine Department of Transportation
Soil/Rock Exploration Log
US CUSTOMARY UNITS

Project:	Babson Bridge (#5244) over Kitteredge Brook	Location:	Sound Drive, Mount Desert, Maine	Boring No.:	BB-MDMB-201
				WIN:	23515.00
Driller:	New England Boring Contractor	Elevation (ft.)	12.27	Auger ID/OD:	
Operator:	Tom C & Mark T	Datum:	NAVD88	Sampler:	SPT/Split spoon
Logged By:	N. Jamba	Rig Type:	Mobile Drill Truck - Mounted	Hammer Wt./Fall:	140lbs/30"
Date Start/Finish:	5/26/2022 - 5/26/2022	Drilling Method:	Drive and Wash/Coring	Core Barrel:	NQ (2" OD)
Boring Location:	STA 11+83.60, 9.51' LT, N 195611.5835, E 2177821.1094	Casing ID/OD:	HW-4"	Water Level *:	15-in at 8:30 AM on 5/26/22
Hammer Efficiency Factor:	0.923	Hammer Type:	Automatic ☒ Hydraulic ☐ Rope & Cathead ☐		

Definitions:
D = Split Spoon Sample; MD = Unsuccessful Split Spoon Sample Attempt; U = Thin Wall Tube Sample; MU = Unsuccessful Thin Wall Tube Sample Attempt; V = Field Vane Shear Test, PP = Pocket Penetrometer; MV = Unsuccessful Field Vane Shear Test Attempt
R = Rock Core Sample; SSA = Solid Stem Auger; HSA = Hollow Stem Auger; RC = Roller Cone; WOH = Weight of 140lb. Hammer; WOR/C = Weight of Rods or Casing; WO1P = Weight of One Person
S_u = Peak/Remolded Field Vane Undrained Shear Strength (psf); $S_{u(lab)}$ = Lab Vane Undrained Shear Strength (psf); q_p = Unconfined Compressive Strength (ksf); N-uncorrected = Raw Field SPT N-value; Hammer Efficiency Factor = Rig Specific Annual Calibration Value; N_{60} = SPT N-uncorrected Corrected for Hammer Efficiency; N_{60} = (Hammer Efficiency Factor/60%)*N-uncorrected
T_v = Pocket Torvane Shear Strength (psf); WC = Water Content, percent; LL = Liquid Limit; PL = Plastic Limit; PI = Plasticity Index; G = Grain Size Analysis; C = Consolidation Test

Sample No.	Pen./Rec. (in.)	Sample Depth (ft.)	Blows (/6 in.) Shear Strength (psf) or RQD (%)	N-uncorrected	N_{60}	Casing Blows
						SPIN HW
1D	24/20	1.00 - 3.00	27/74/49/27	123	189	
2D	24/17	3.00 - 5.00	5/5/5/7	10	15	
3D	24/16	5.50 - 7.50	3/6/3/4	9	14	
4D	24/12	10.00 - 12.00	1/6/4/9	10	15	
5D	24/14	15.00 - 17.00	25/27/19/28	46	71	
6D	24/16	20.00 - 22.00	18/31/29/29	60	92	
7D	24/15	25.00 - 27.00	20/25/28/30	53	82	
8D	24/14	30.00 - 32.00	21/32/32/23	64	98	
9D	24/12	35.00 - 37.00	20/31/29/50	60	92	
R1	60/60	37.50 - 42.50	RQD = 33%			NQ-2
R2	60/60	42.50 - 47.50	RQD = 26%			

Depth (ft.)	Elevation (ft.)	Visual Description and Remarks	Laboratory Testing Results/AASHTO and Unified Class.
0.0		9" BITUMINOUS PAVEMENT	
0.8	11.5	Dark gray, very dense, fine to medium SAND, little silt, little gravel. (FILL)	
		Light gray, medium dense, fine to medium SAND, little silt, little gravel. (FILL)	
		Light gray, moist, medium dense, fine to medium SAND, little silt, little gravel. (FILL)	
10.0	2.3	Light gray, medium dense, fine to medium SAND, some silt, trace wood. (BURIED ORGANICS)	
15.0	-2.7	Light brown, wet, very dense, fine to coarse SAND, some gravel, some silt (GLACIAL DEPOSITS).	Silt=21.4% Sand=51.9% Gravel=26.7% A-1-b (SM)
		Light brown, wet, very dense, fine to coarse SAND, some gravel, some silt (GLACIAL DEPOSITS).	
		Light gray, wet, very dense, fine to coarse SAND, some silt, some gravel (GLACIAL DEPOSITS).	Silt=24.8% Sand=51.4% Gravel=23.8% A-1-b (SM)
		Light gray, wet, very dense, fine to coarse SAND, some silt, some gravel (GLACIAL DEPOSITS).	
		Light gray, wet, very dense, fine to coarse SAND, some silt, some gravel (GLACIAL DEPOSITS).	
36.5	-24.2	Observed pink rock fragment in the drill cuttings at about 36.5 feet. Presumed top of rock at 36.5 feet bgs. R1: Bedrock: Pink with black mottles, fine grained, GRANITE, moderately hard, slightly weathered, horizontal to steep, very close to moderately close, healed fractures, Somesville Formation, RQD = 33%, poor, Rec = 60"/60"(100%) Rock core rates: 37.5 ft-38.5 ft (2:34), 38.5 ft-39.5 ft (1:58), 39.5 ft-40.5 ft (2:07), 40.5 ft-41.5 ft (2:10), 41.5 ft-42.5 ft (2:34)	
		R2: Pink with black mottles, fine grained, GRANITE, moderately hard, slightly weathered, horizontal to steep, very close to moderately close, healed fractures, Somesville Formation, RQD = 26%, poor, Rec = 60"/60"(100%) Rock core rates: 42.5 ft-43.5 ft (3:50), 43.5 ft-44.5 ft (2:10), 44.5 ft-45.5 ft (2:20), 45.5 ft-46.5 ft (2:30), 46.5 ft-47.5 ft (2:20)	
47.5	-35.2	Bottom of Exploration at 47.5 feet below ground surface. Backfilled borehole with drill cuttings and 5 bags of gravel. Restored ground surface with asphalt cold patch.	

Remarks:
Truck-Mounted Mobile B-53 Drill Rig

Stratification lines represent approximate boundaries between soil types; transitions may be gradual.
* Water level readings have been made at times and under conditions stated. Groundwater fluctuations may occur due to conditions other than those present at the time measurements were made.

Page 2 of 2 Boring No.: BB-MDMB-201

STATE OF MAINE
DEPARTMENT OF TRANSPORTATION
02351500
WIN 023515.00
BRIDGE PLANS
BRIDGE NO. 5244

STATE OF MAINE RUSSELL L. THOMAS, JR. No. 18478 LICENSED PROFESSIONAL ENGINEER

SIGNATURE 18478
P.E. NUMBER 10-1-2024
DATE

		BY	DATE
PROJ. MANAGER	DENVER SMALL		
DESIGN-DETAILED	S. PANDA	K. WOOD	8\2024
CHECKED-REVIEWED	S. PANDA	R. THOMAS	
DESIGN2-DETAILED2			
DESIGN3-DETAILED3			
REVISIONS 1			
REVISIONS 2			
REVISIONS 3			
REVISIONS 4			
FIELD CHANGES			

BABSON BRIDGE
KITTEREDGE BROOK
MOUNT DESERT HANCOCK COUNTY

BORING LOGS

SHEET NUMBER
8
OF 32

Maine Department of Transportation

Soil/Rock Exploration Log
US CUSTOMARY UNITS

Project:	Babson Bridge (#5244) over Kitteredge Brook	Boring No.:	BB-MDMB-202
Location:	Sound Drive, Mount Desert, Maine	WIN:	23515.00
Driller:	New England Boring Contractor	Elevation (ft.)	10.77
Auger ID/OD:			
Operator:	Tom C & Mark T	Datum:	NAVD88
Sampler:	SPT/Split spoon		
Logged By:	N. Jambo	Rig Type:	Mobile Drill Truck - Mounted
Hammer Wt./Fall:	140lbs/30"		
Date Start/Finish:	5/25/2022 - 5/25/2022	Drilling Method:	Drive and Wash/Coring
Core Barrel:	NQ (2" OD)		
Boring Location:	STA: 124+33.45, 8.79' Rt; N. 1954018.7404, E. 2137312.9315	Casing ID/OD:	HW-4"
Water Level *:	12-in at 10:05 AM on 5/25/22		
Hammer Efficiency Factor:	0.923	Hammer Type:	Automatic ☒ Hydraulic ☐ Rope & Cathead ☐

Definitions:
D = Split Spoon Sample
MD = Unsuccessful Split Spoon Sample Attempt
U = Thin Wall Tube Sample
MU = Unsuccessful Thin Wall Tube Sample Attempt
V = Field Vane Shear Test, PP = Pocket Penetrometer
MV = Unsuccessful Field Vane Shear Test Attempt
R = Rock Core Sample
SSA = Solid Stem Auger
HSA = Hollow Stem Auger
RC = Roller Cone
WOH = Weight of 140lb. Hammer
WOR/C = Weight of Rods or Casing
WOP = Weight of One Person
S_u = Peak/Remolded Field Vane Undrained Shear Strength (psf)
S_u(lab) = Lab Vane Undrained Shear Strength (psf)
q_p = Unconfined Compressive Strength (ksf)
N-uncorrected = Raw Field SPT N-value
Hammer Efficiency Factor = Rig Specific Annual Calibration Value
N_{60} = SPT N-uncorrected Corrected for Hammer Efficiency
N_{60} = (Hammer Efficiency Factor/60%)*N-uncorrected
T_v = Pocket Torvane Shear Strength (psf)
MC = Water Content, percent
LL = Liquid Limit
PL = Plastic Limit
PI = Plasticity Index
G = Grain Size Analysis
C = Consolidation Test

Sample Information

Depth (ft.)	Sample No.	Pen./Rec. (in.)	Sample Depth (ft.)	Blows, Shear Strength (psf) or RQD (%)	N-uncorrected	N_{60}	Casing Blows	Elevation (ft.)	Visual Description and Remarks	Laboratory Testing Results/ AASHTO and Unified Class.
							SPN HW	10.2	7" BITUMINOUS PAVEMENT — 0.5	
	10	24/10	1.00 - 3.00	15/18/3/8	21	32		8.8	Dark gray, dense, fine to medium SAND, little silt, little gravel, trace asphalt. (FILL) — 2.0	
									Drill rig chattered from 2 to 5 feet on possible cobbles and boulders.	
5	20	24/0	5.00 - 7.00	5/9/6/5	15	23		5.8	No Recovery — 5.0	
10	30	24/10	10.00 - 12.00	5/7/6/14	13	20			Light gray, medium dense, fine to medium SAND, little silt, little gravel. (FILL)	
15	40	24/6	15.00 - 17.00	10/19/25/40	44	68		-4.2	Light gray, wet, very dense, gravelly SAND, trace silt (GLACIAL DEPOSITS). — 15.0	Silt=9.3% Sand=51.4% Gravel=39.3% A-1-a (SW-SM)
									Drill rig chattered from about 19 to 20 feet. Observed sand and rock fragments in the drill cuttings.	
20	50	24/15	20.50 - 22.50	15/24/24/22	48	74			Light gray, wet, very dense, Silty SAND, some gravel. (GLACIAL DEPOSITS) Rock fragment at tip of the spoon.	Silt=38.2% Sand=40.4% Gravel=21.4% A-4(0) (SM)
								-12.7	Observed pink rock fragments in the drill cuttings from 23.5 to 27.5 feet. Presumed top of rock at 23.5 feet bgs. — 23.5	
25	R1	60/60	27.50 - 32.50	RQD = 20%			NQ-2		R1: Bedrock: Pink with black mottles, fine-grained, GRANITE, moderately hard, slightly weathered, horizontal to steep very close to moderately close, open fractures Somesville Formation, RQD = 20%, very poor, Rec = 60"/60"(100%) Rock core rates: 27.5 ft-28.5 ft (2:10), 25.5 ft-29.5 ft (1:51), 29.5 ft-30.5 ft (1:97), 30.5 ft-31.5 ft (1:35), 31.5 ft-32.5 ft (2:05)	
30	R2	32/32	33.00 - 35.67	RQD = 8%					R2: Pink with black mottles, fine grained, GRANITE, moderately hard, slightly weathered, horizontal to steep, very close to close, healed fractures Somesville Formation, RQD = 8%, very poor, Rec = 32"/32" (100%) Rock core rates: 33.0 ft-34.0 ft (1:30), 34.0 ft-35.0 ft (2:10), 35.0 ft-35.7 ft (1:50).	
35	R3	27/27	35.70 - 37.95	RQD = 0%				-27.2	R3: Pink with black mottles, fine-grained, GRANITE, moderately hard, slightly weathered, horizontal to steep, very close, healed fractures, Somesville Formation, RQD = 0%, very poor, Rec = 27"/27"(100%) Rock core rates: 35.7 ft-36.7 ft (1:10), 36.7 ft-38.0 ft (2:30). — 38.0	
40									Bottom of Exploration at 38.0 feet below ground surface. Backfilled borehole with drill cuttings and 5 bags of gravel. Restored ground surface with asphalt cold patch.	
45										
50										

Remarks:
Truck-Mounted Mobile B-53 Drill Rig

Stratification lines represent approximate boundaries between soil types; transitions may be gradual.

* Water level readings have been made at times and under conditions stated. Groundwater fluctuations may occur due to conditions other than those present at the time measurements were made.

Boring No.: BB-MDMB-202

STATE OF MAINE
DEPARTMENT OF TRANSPORTATION

02351500

WIN 023515.00

BRIDGE NO. 5244

BRIDGE PLANS

STATE OF MAINE
RUSSELL L. THOMAS, JR.
No. 18478
LICENSED PROFESSIONAL ENGINEER

PROJ. MANAGER	DENVER SMALL	BY	DATE
DESIGN-DETAILED	S. PANDA	K. WOOD	8\2024
CHECKED-REVIEWED	S. PANDA	R. THOMAS	------
DESIGN2-DETAILED2	------	------	------
DESIGN3-DETAILED3	------	------	------
REVISIONS 1	------	------	------
REVISIONS 2	------	------	------
REVISIONS 3	------	------	------
REVISIONS 4	------	------	------
FIELD CHANGES	------	------	------

SIGNATURE

18478

P.E. NUMBER

10-1-2024

DATE

BABSON BRIDGE
KITTEREDGE BROOK
MOUNT DESERT HANCOCK COUNTY

BORING LOGS

SHEET NUMBER

9

OF 32

Filename: ...\MSTA\009_Boring Logs.dgn Division: BRIDGE Username: Date:9/25/2024

ITEM 609.23 TERMINAL CURB TYPE 1		
	End Points	
4	Note: Terminal Curb Length = 15'	

ITEM 609.234 TERMINAL CURB TYPE 1 - 4 FT.		
	End Points	
1		

ITEM 609.238 TERMINAL CURB TYPE 1 - 8 FT.		
	End Points	
5	8	9
11		

PRECAST CONCRETE TRANSITION CURB		
	End Points	
		12
13		

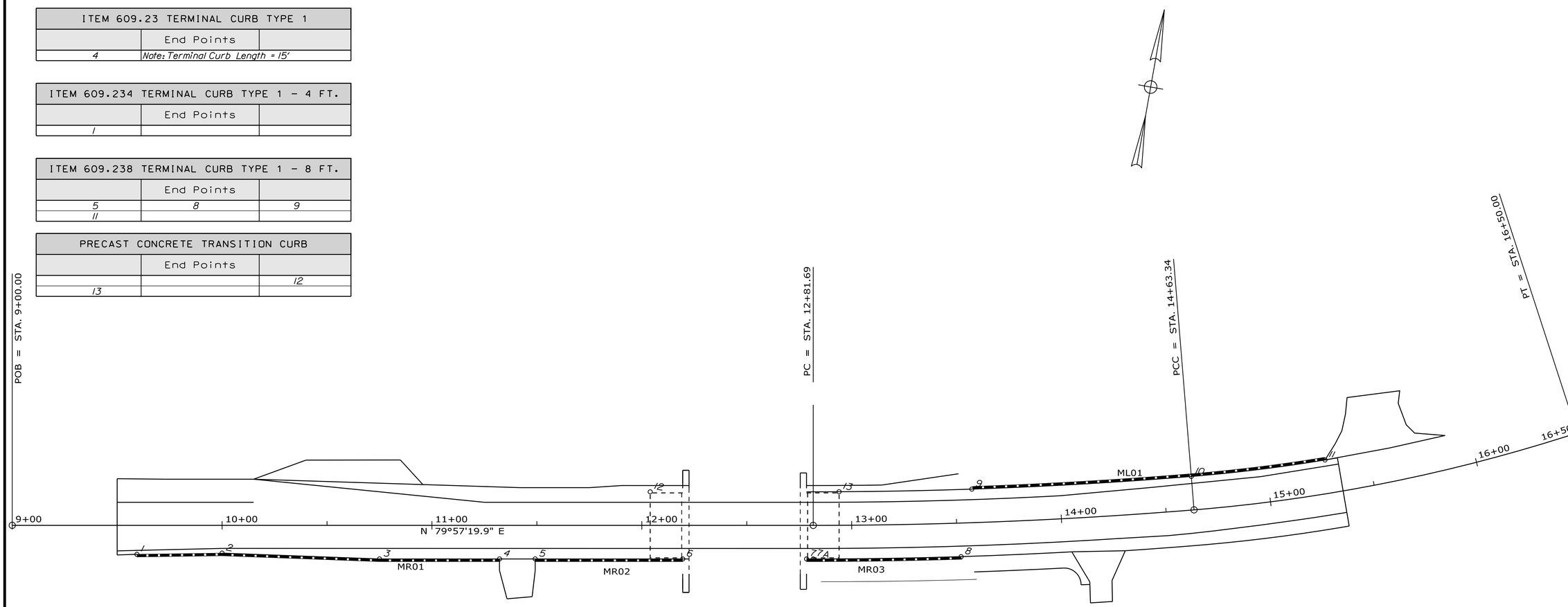

CONTROL POINTS FOR MR01				
Point	Station	Offset	X Coord.	Y Coord.
1	9+59.41	13.81'RT	195549.5225	2177604.4312
2	10+00.00	13.23'RT	195557.1676	2177644.2946
3	10+75.00	16.00'RT	195567.5226	2177718.6278
4	11+32.19	16.00'RT	195577.4968	2177774.9387

CONTROL POINTS FOR MR02				
Point	Station	Offset	X Coord.	Y Coord.
5	11+49.19	16.00'RT	195580.4618	2177791.6781
6	12+19.50	16.00'RT	195592.7252	2177860.9130

CONTROL POINTS FOR MR03				
Point	Station	Offset	X Coord.	Y Coord.
7	12+78.50	16.00'RT	195603.0178	2177919.0083
7A	12+81.69	16.00'RT	195603.5710	2177922.1444
8	13+51.66	16.00'RT	195616.9530	2177991.3408

CONTROL POINTS FOR ML01				
Point	Station	Offset	X Coord.	Y Coord.
9	13+57.70	16.01'LT	195649.5198	2177990.6348
10	14+63.34	16.01'LT	195673.7558	2178092.6664
11	15+28.86	16.01'LT	195692.5955	2178154.0265

PLAN

25 0 25 50

Scale of Feet

ITEM 609.11 VERTICAL CURB TYPE 1						
TANGENT, CURVE & CENTER POINT DATA FOR MR01						
Pt. to Pt.	Radius	Length	Station	Offset	X Coord	Y Coord
1-2		36.59'		RT.		
2-3		75.05'		RT.		
3-4		38.19'		RT.		
TANGENT, CURVE & CENTER POINT DATA FOR MR02						
Pt. to Pt.	Radius	Length	Station	Offset	X Coord	Y Coord
5-6		58.31'		RT.		
TANGENT, CURVE & CENTER POINT DATA FOR MR03						
Pt. to Pt.	Radius	Length	Station	Offset	X Coord	Y Coord
7-7A		3.19'		RT.		
7A-8	2241.00'	58.98'	13+16.92	2225.00'	197810.2229	2177531.2884
TANGENT, CURVE & CENTER POINT DATA FOR MR03						
Pt. to Pt.	Radius	Length	Station	Offset	X Coord	Y Coord
9-10	2208.99'	92.88'	14+05.01	2225.00'	197810.2229	2177531.2884
10-11	783.99'	56.21'	14+96.10	800.00'	196432.0068	2177893.4284

Note: The lengths of the curb inlets and terminal sections have been deducted from the overall length between control points.

STATE OF MAINE
DEPARTMENT OF TRANSPORTATION

02351500

WIN 023515.00

BRIDGE PLANS

BRIDGE NO. 5244

STATE OF MAINE KEITH S. WOOD No. 10423 LICENSED PROFESSIONAL ENGINEER

PROJ. MANAGER	DENNIFER SMALL		
DESIGN-DETAILED	M. CRONIN	C. JONES	12\2022
CHECKED-REVIEWED	K. WOOD	S. HUBBARD	12\2022
DESIGN2-DETAILED2			
DESIGN3-DETAILED3			
REVISIONS 1			
REVISIONS 2			
REVISIONS 3			
REVISIONS 4			
FIELD CHANGES			

P.E. NUMBER 10423

SIGNATURE

DATE 9/26/2024

BABSON BRIDGE
KITTEREDGE BROOK
MOUNT DESERT HANCOCK COUNTY

GEOMETRIC PLAN

SHEET NUMBER

10

OF 32

Filename: ...\BRIDGE\MSTA\010_Geometrics.dgn Division: BRIDGE Username: Date:9/25/2024

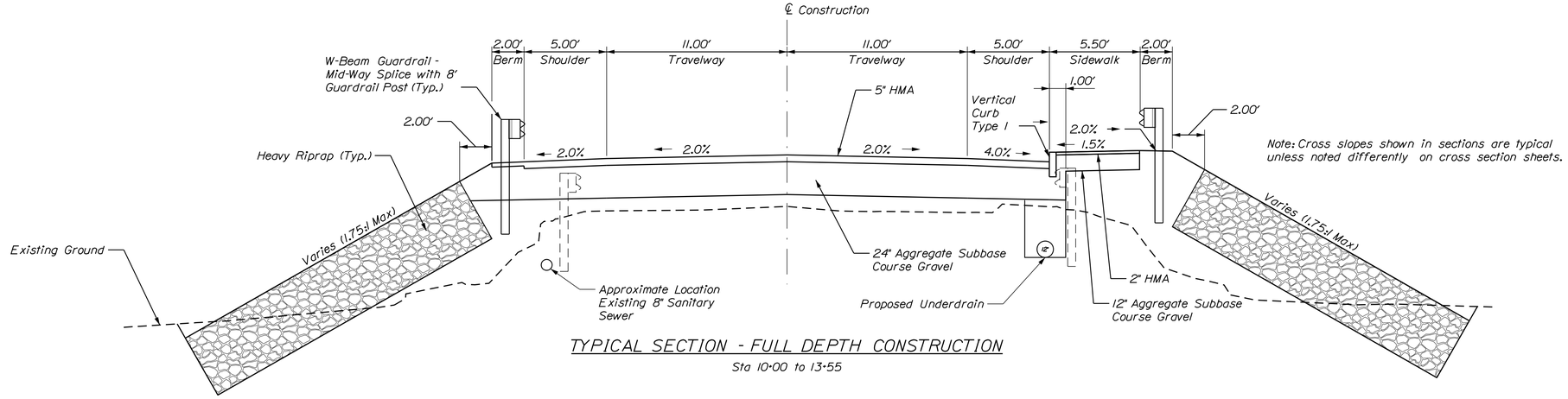

TYPICAL SECTION - FULL DEPTH CONSTRUCTION

Sta 10+00 to 13+55

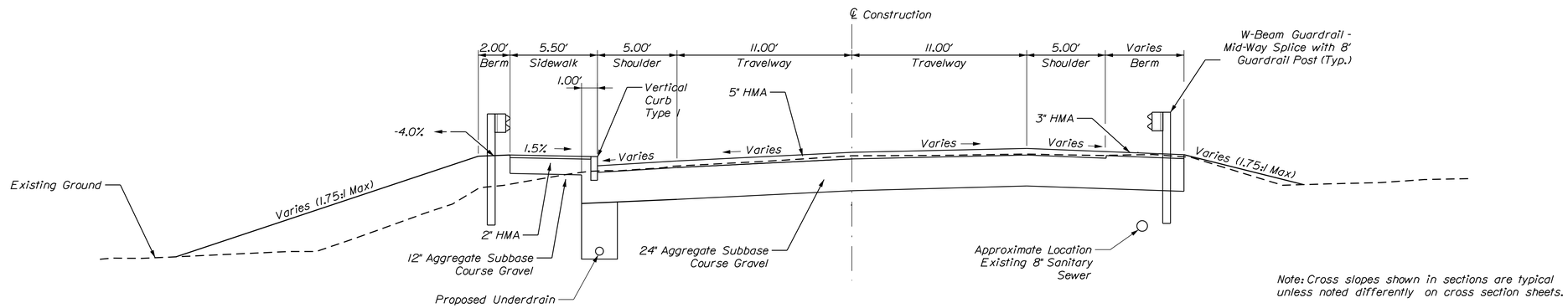

TYPICAL SECTION - FULL DEPTH CONSTRUCTION

Sta. 13+55 to 14+50

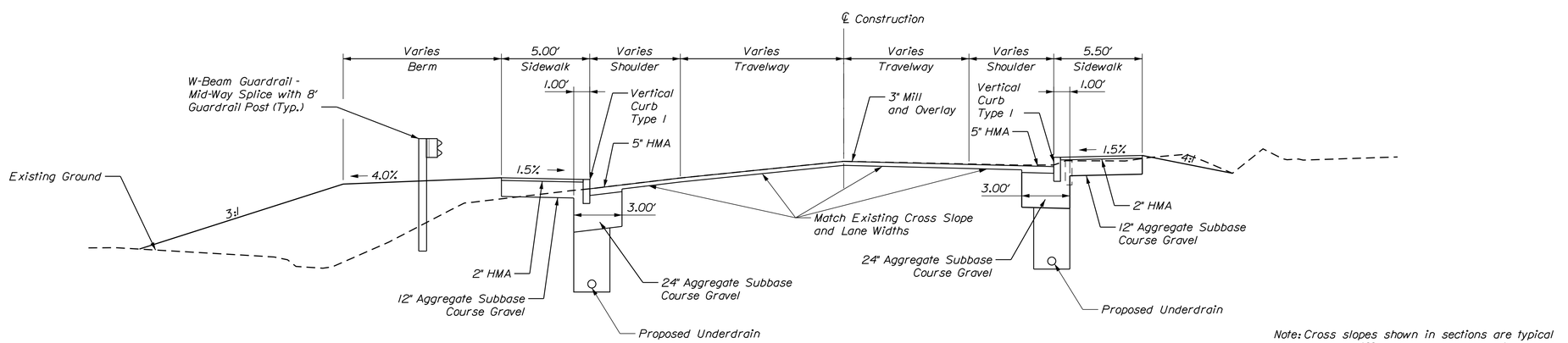

SIDEWALK LEFT

SIDEWALK RIGHT

TYPICAL SECTION - MILL AND OVERLAY

Sta. 9+50 to 10+00
Sta. 14+50 to 15+35

STATE OF MAINE
DEPARTMENT OF TRANSPORTATION

02351500

WIN 023515.00

BRIDGE PLANS

BRIDGE NO. 5244

STATE OF MAINE KEITH S. WOOD No. 10423 PROFESSIONAL ENGINEER

P.E. NUMBER 10423

9/26/2024

DATE

		BY	DATE
PROJ. MANAGER	DENVER SMALL		
DESIGN-DETAILED	M. CRONIN	C. JONES	12/2022
CHECKED-REVIEWED	K. WOOD	S. HUBBARD	12/2022
DESIGN2-DETAILED2			
DESIGN3-DETAILED3			
REVISIONS 1			
REVISIONS 2			
REVISIONS 3			
REVISIONS 4			
FIELD CHANGES			

BABSON BRIDGE
KITTEREDGE BROOK
MOUNT DESERT HANCOCK COUNTY

TYPICAL SECTIONS

SHEET NUMBER

11

OF 32

Filename: ...\MSTA\011_Typ Sections.dgn Division: BRIDGE Username: Date:9/25/2024

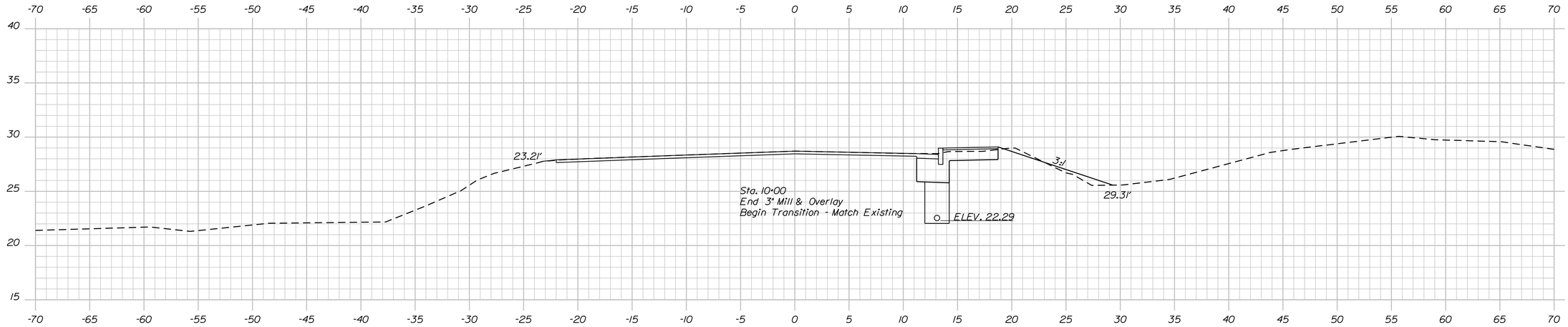

10+00.00

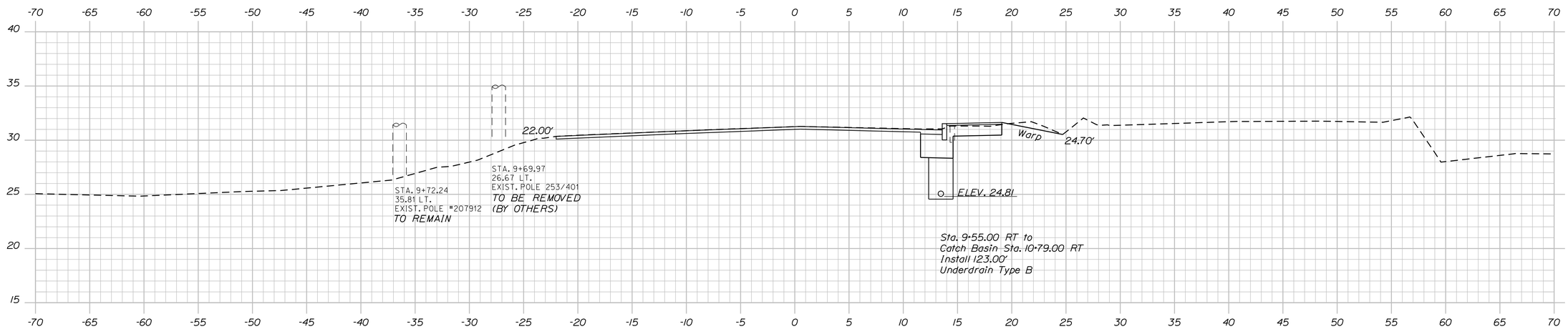

9+75.00

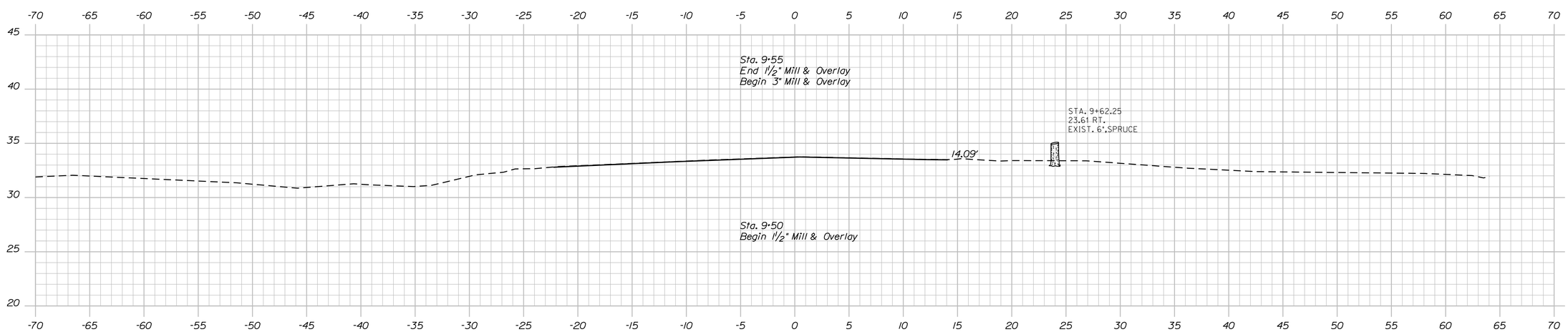

9+50.00

DRAFT - NOT FOR CONSTRUCTION

STATE OF MAINE
DEPARTMENT OF TRANSPORTATION

02351500

WIN 023515.00

BRIDGE NO. 5244

BRIDGE PLANS

STATE OF MAINE KEITH S. WOOD No. 10423 LICENSED PROFESSIONAL ENGINEER

Keith S. Wood 4/26/2024

PROJ. MANAGER	DENVER SMALL	BY	DATE
DESIGN-DETAILED	M. CRONIN	C. JONES	
CHECKED-REVIEWED	K. WOOD	S. HUBBARD	12/2022
DESIGN2-DETAILED2			
DESIGN3-DETAILED3			
REVISIONS 1			
REVISIONS 2			
REVISIONS 3			
REVISIONS 4			
FIELD CHANGES			

SIGNATURE

P.E. NUMBER 10423

DATE 4/26/2024

BABSON BRIDGE
KITTEREDGE BROOK
MOUNT DESERT HANCOCK COUNTY

CROSS SECTIONS

SHEET NUMBER

12

OF 32

Sta. 9+75.00 to Sta. 10+00.00

Filename: ...\BRIDGE\MSTA\012-023_xsect.dgn Division: BRIDGE Username: Date:9/25/2024

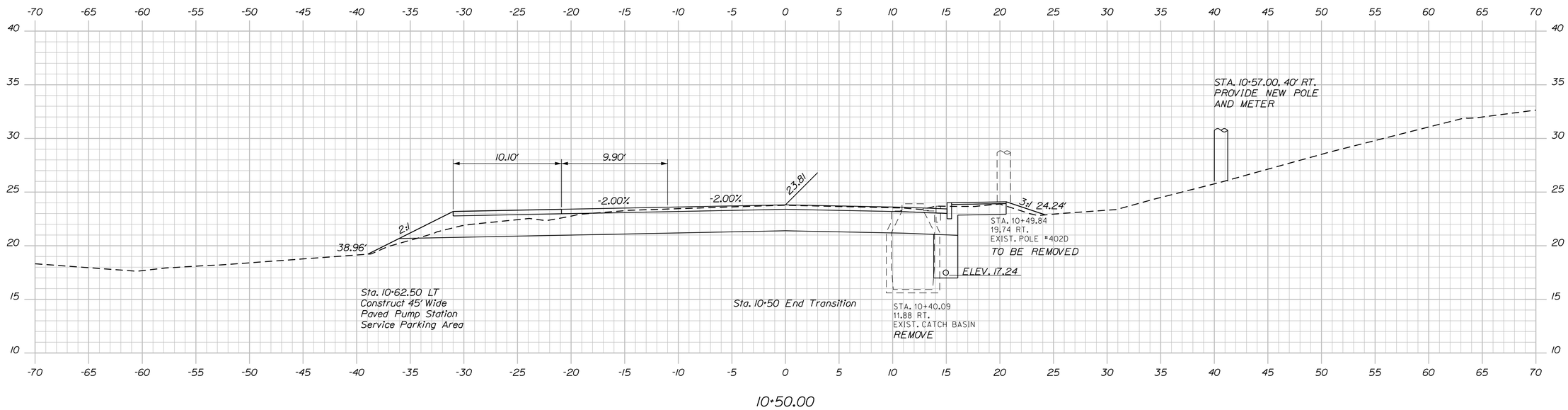

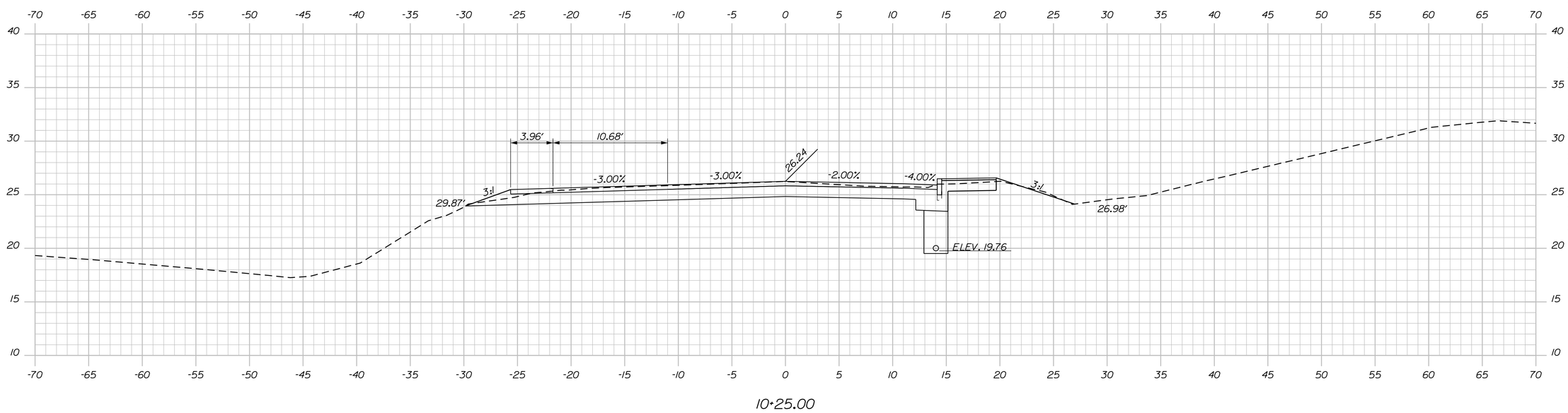

DRAFT - NOT FOR CONSTRUCTION

STATE OF MAINE
DEPARTMENT OF TRANSPORTATION

02351500

WIN 023515.00

BRIDGE NO. 5244

BRIDGE PLANS

STATE OF MAINE KEITH S. WOOD No. 10423 PROFESSIONAL ENGINEER

PROJ. MANAGER	DENVER SMALL	BY	DATE
DESIGN-DETAILED	M. CRONIN	C. JONES	
CHECKED-REVIEWED	K. WOOD	S. HUBBARD	12/2022
DESIGN2-DETAILED2			
DESIGN3-DETAILED3			
REVISIONS 1			
REVISIONS 2			
REVISIONS 3			
REVISIONS 4			
FIELD CHANGES			

SIGNATURE 10423

P.E. NUMBER

DATE

BABSON BRIDGE
KITTEREDGE BROOK
MOUNT DESERT HANCOCK COUNTY

CROSS SECTIONS

SHEET NUMBER

13

OF 32

Filename: ...\BRIDGE\MSTA\012-023_xsect.dgn Division: BRIDGE Username: Date:9/25/2024

Sta. 10+25.00 to Sta. 10+50.00

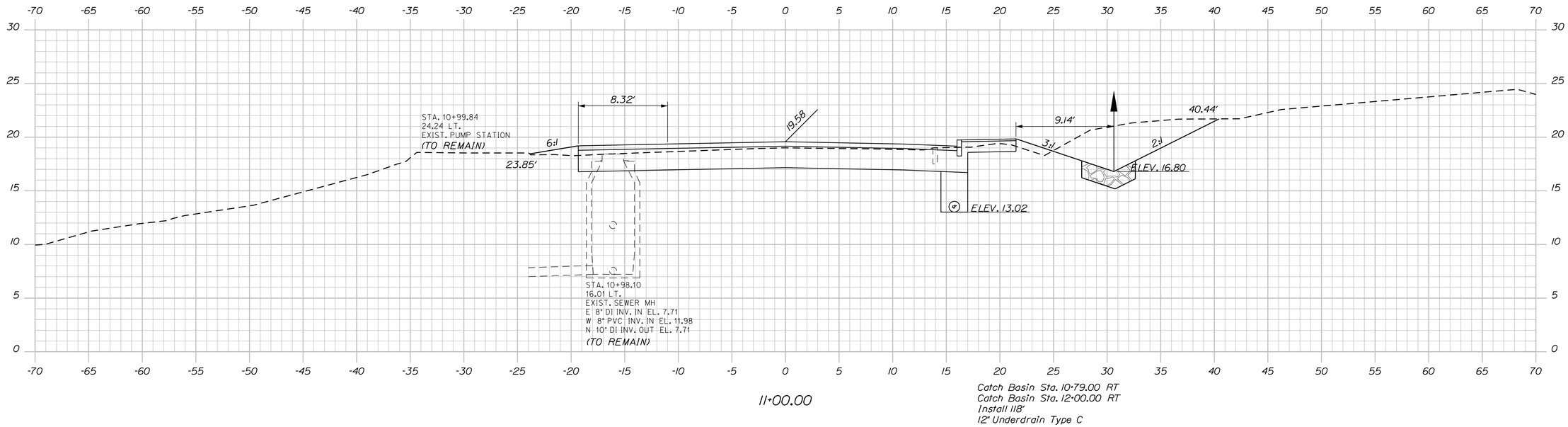

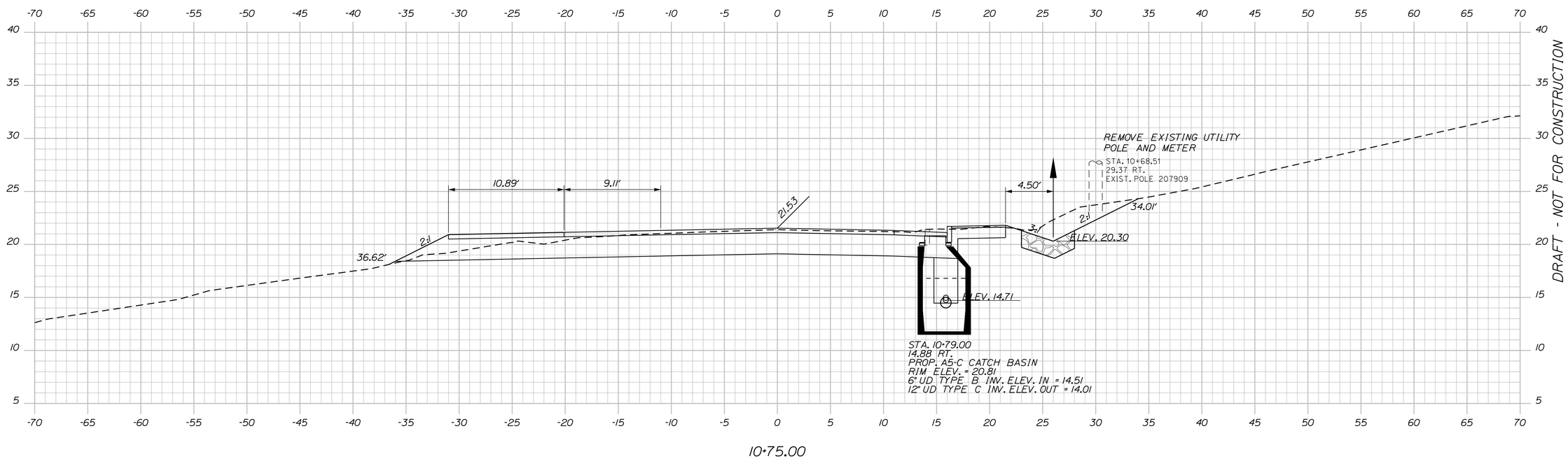

DRAFT - NOT FOR CONSTRUCTION

STATE OF MAINE
DEPARTMENT OF TRANSPORTATION

02351500

WIN 023515.00

BRIDGE NO. 5244

BRIDGE PLANS

STATE OF MAINE
KEITH S. WOOD
No. 10423
LICENSED
PROFESSIONAL ENGINEER

Keith S. Wood 12/20/24

SIGNATURE

P.E. NUMBER 10423

12/20/24

DATE

PROJ. MANAGER	DENVER SMALL	BY	DATE
DESIGN-DETAILED	M. CRONIN	C. JONES	
CHECKED-REVIEWED	K. WOOD	S. HUBBARD	12/2022
DESIGN2-DETAILED2			
DESIGN3-DETAILED3			
REVISIONS 1			
REVISIONS 2			
REVISIONS 3			
REVISIONS 4			
FIELD CHANGES			

BABSON BRIDGE
KITTEREDGE BROOK
MOUNT DESERT HANCOCK COUNTY

CROSS SECTIONS

SHEET NUMBER

14

OF 32

Sta. 10+75.00 to Sta. 11+00.00

Filename: ...\BRIDGE\MSTA\012-023_xsect.dgn Division: BRIDGE Username: Date:9/25/2024

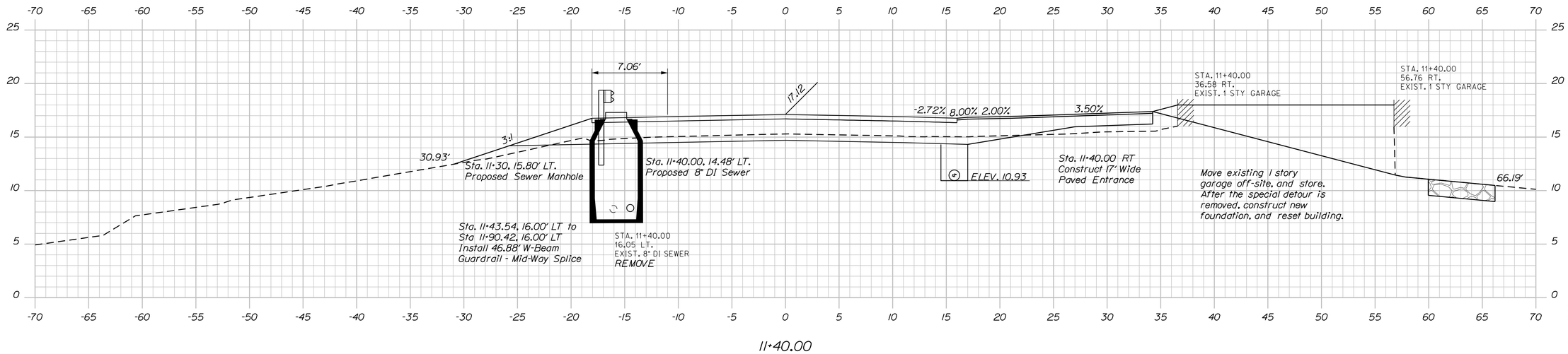

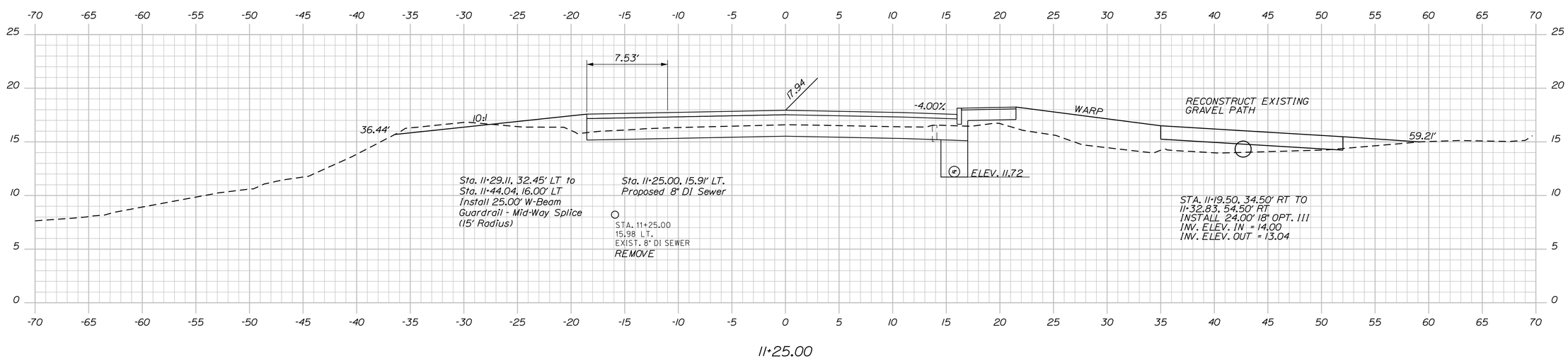

DRAFT - NOT FOR CONSTRUCTION

STATE OF MAINE
DEPARTMENT OF TRANSPORTATION

02351500

WIN 023515.00

BRIDGE NO. 5244

BRIDGE PLANS

STATE OF MAINE KEITH S. WOOD No. 13863 LICENSED PROFESSIONAL ENGINEER

		DATE
Keith S. Wood	SIGNATURE	10/21/2024
10423	P.E. NUMBER	
9/26/2024	DATE	

PROJ. MANAGER	DENVER SMALL	BY	DATE
DESIGN-DETAILED	M. CRONIN	C. JONES	
CHECKED-REVIEWED	K. WOOD	S. HUBBARD	12/2022
DESIGN2-DETAILED2			
DESIGN3-DETAILED3			
REVISIONS 1			
REVISIONS 2			
REVISIONS 3			
REVISIONS 4			
FIELD CHANGES			

BABSON BRIDGE
KITTEREDGE BROOK
MOUNT DESERT HANCOCK COUNTY

CROSS SECTIONS

SHEET NUMBER
15
OF 32

Date:9/25/2024 Username: Division: BRIDGE Filename: ...\BRIDGE\MSTA\012-023_xsect.dgn

Sta. 11+25.00 to Sta. 11+40.00

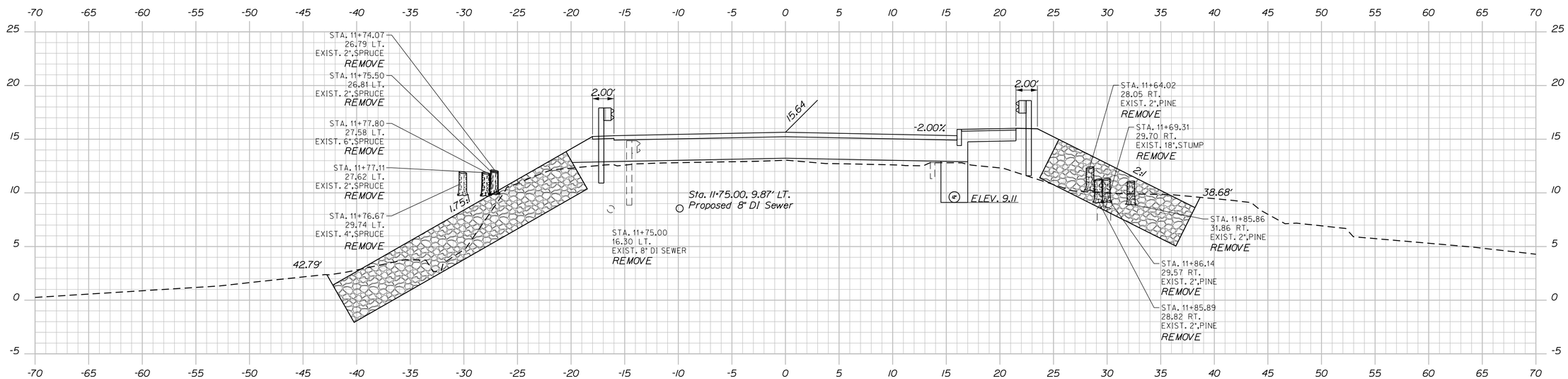

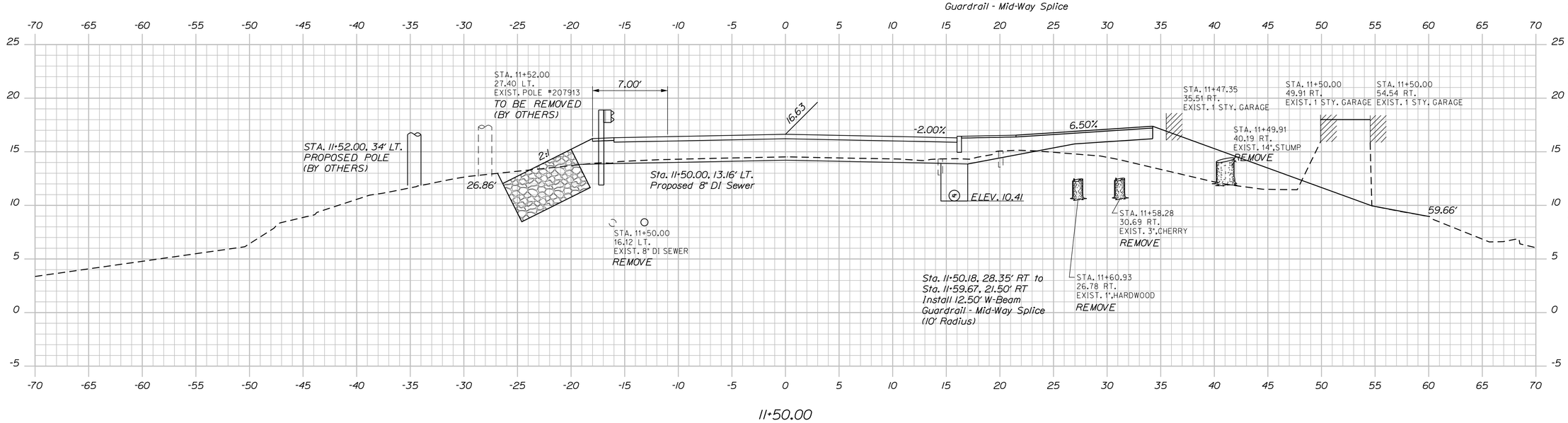

DRAFT - NOT FOR CONSTRUCTION

STATE OF MAINE
DEPARTMENT OF TRANSPORTATION

02351500

WIN
023515.00

BRIDGE NO. 5244

BRIDGE PLANS

STATE OF MAINE
KEITH S. WOOD
No. 10423
LICENSED
PROFESSIONAL ENGINEER

PROJ. MANAGER	DENVER SMALL	BY	DATE
DESIGN-DETAILED	M. CRONIN	C. JONES	
CHECKED-REVIEWED	K. WOOD	S. HUBBARD	12/2022
DESIGN2-DETAILED2			
DESIGN3-DETAILED3			
REVISIONS 1			
REVISIONS 2			
REVISIONS 3			
REVISIONS 4			
FIELD CHANGES			

SIGNATURE
10423
P.E. NUMBER
4/26/2024
DATE

BABSON BRIDGE
KITTEREDGE BROOK
MOUNT DESERT HANCOCK COUNTY

CROSS SECTIONS

SHEET NUMBER
16
OF 32

Filename: ...\BRIDGE\MSTA\012-023_xsect.dgn Division: BRIDGE Username: Date:9/25/2024

Sta. 11+50.00 to Sta. 11+75.00

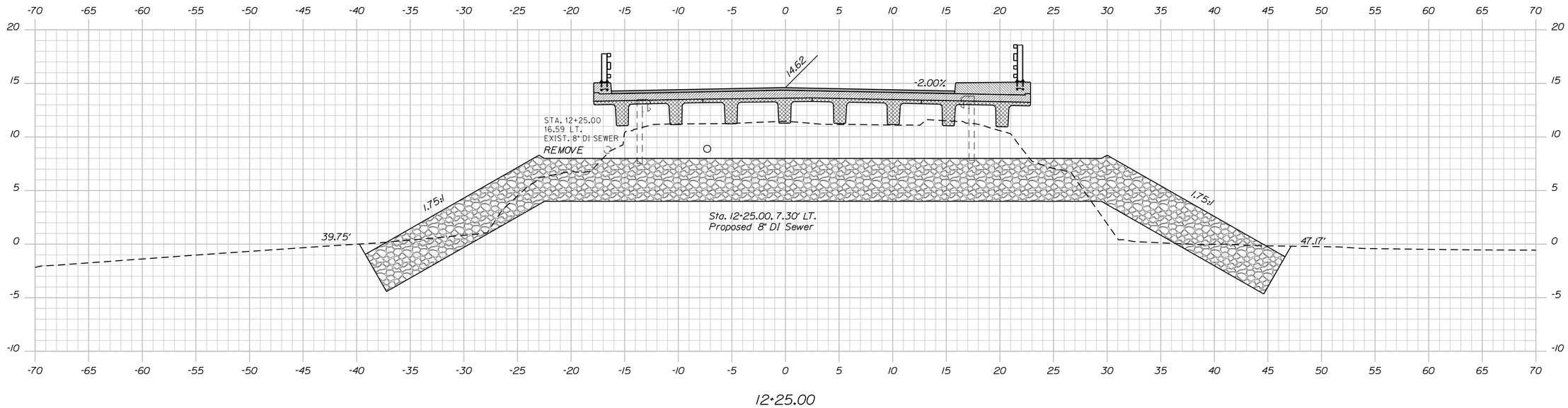

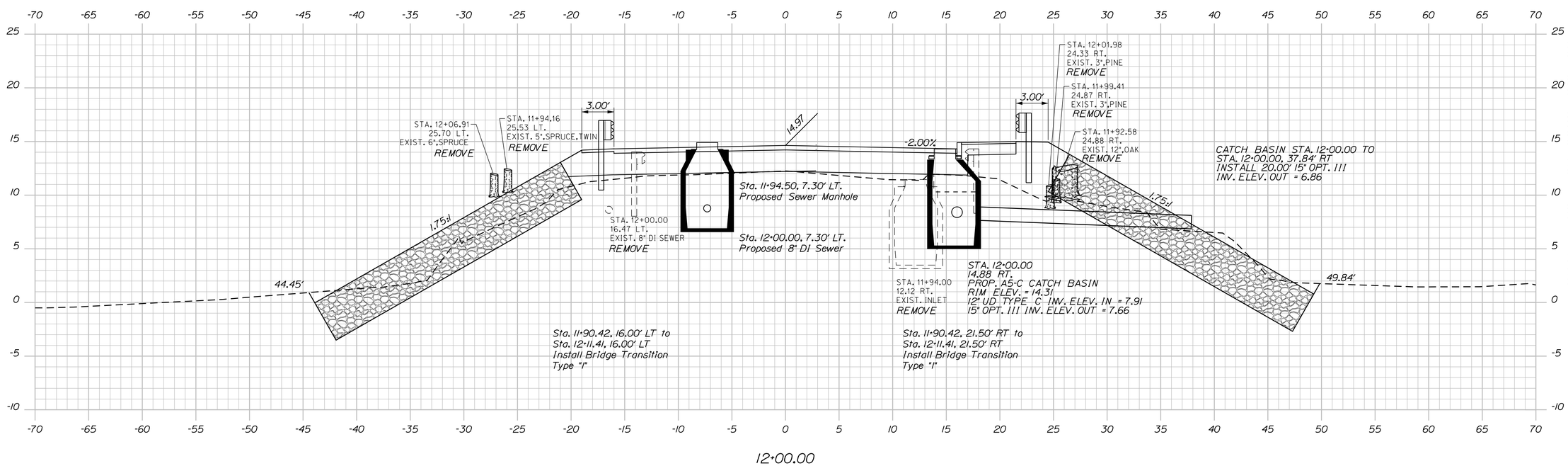

DRAFT - NOT FOR CONSTRUCTION

STATE OF MAINE
DEPARTMENT OF TRANSPORTATION

02351500

WIN 023515.00

BRIDGE NO. 5244

BRIDGE PLANS

STATE OF MAINE
KEITH S. WOOD
No. 10423
LICENSED
PROFESSIONAL ENGINEER

Keith S. Wood 9/26/24

P.E. NUMBER 10423
9/26/2024
SIGNATURE
DATE

PROJ. MANAGER	DENVER SMALL	BY	DATE
DESIGN-DETAILED	M. CRONIN	C. JONES	
CHECKED-REVIEWED	K. WOOD	S. HUBBARD	12/2022
DESIGN2-DETAILED2			
DESIGN3-DETAILED3			
REVISIONS 1			
REVISIONS 2			
REVISIONS 3			
REVISIONS 4			
FIELD CHANGES			

BABSON BRIDGE
KITTEREDGE BROOK
MOUNT DESERT HANCOCK COUNTY

CROSS SECTIONS

SHEET NUMBER
17
OF 32

Sta. 12+00.00 to Sta. 12+25.00

Filename: ...\BRIDGE\MSTA\012-023_xsect.dgn Division: BRIDGE Username: Date:9/25/2024

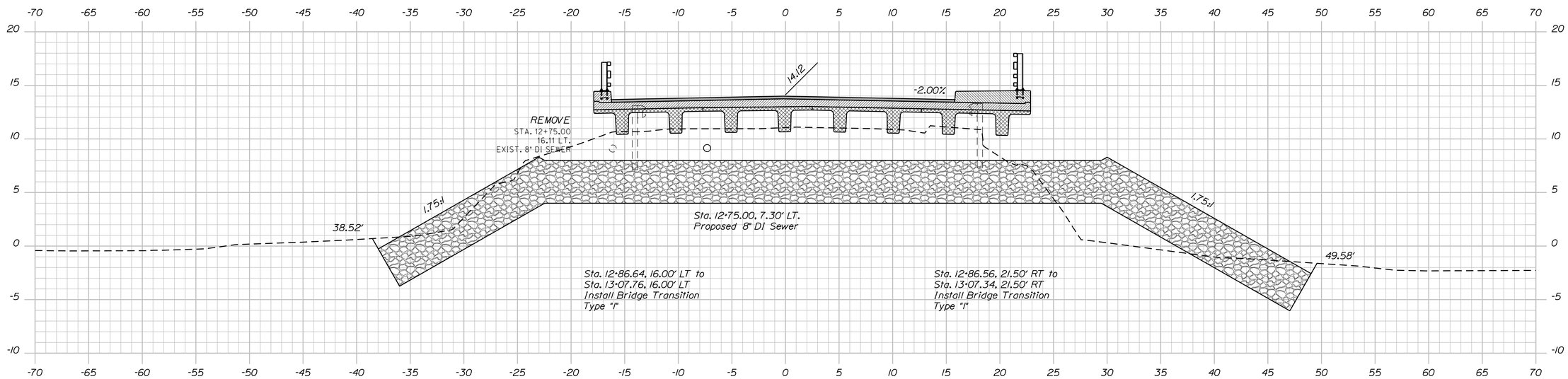

12+75.00

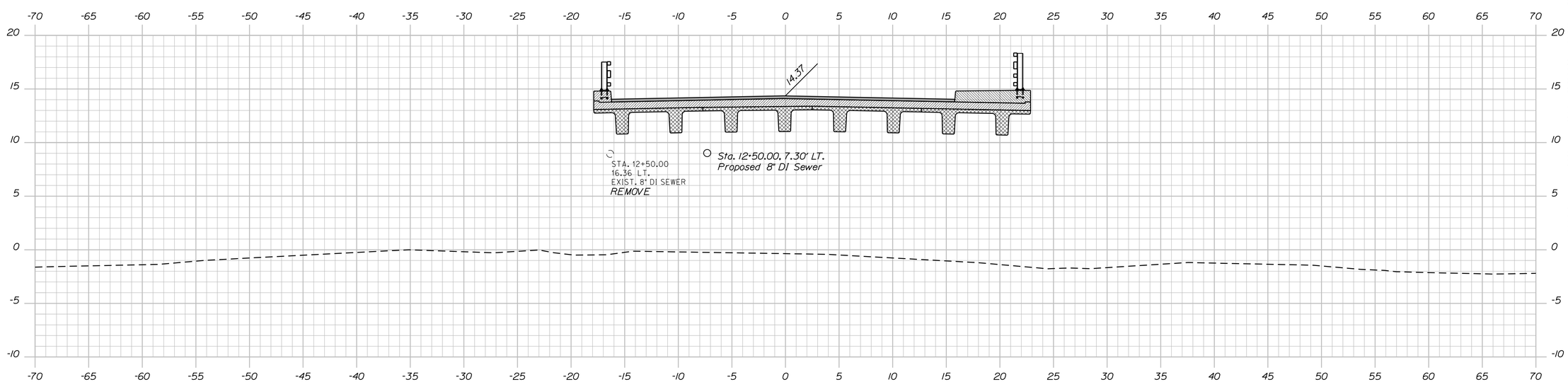

12+50.00

DRAFT - NOT FOR CONSTRUCTION

Sta. 12+50.00 to Sta. 12+75.00

STATE OF MAINE
DEPARTMENT OF TRANSPORTATION

02351500

WIN 023515.00

BRIDGE NO. 5244

BRIDGE PLANS

STATE OF MAINE KEITH S. WOOD NO. 10423 PROFESSIONAL ENGINEER

P.E. NUMBER 10423

SIGNATURE

DATE 9/20/2024

PROJ. MANAGER	DENVER SMALL	BY	DATE
DESIGN-DETAILED	M. CRONIN	C. JONES	
CHECKED-REVIEWED	K. WOOD	S. HUBBARD	12/2022
DESIGN2-DETAILED2			
DESIGN3-DETAILED3			
REVISIONS 1			
REVISIONS 2			
REVISIONS 3			
REVISIONS 4			
FIELD CHANGES			

BABSON BRIDGE
KITTEREDGE BROOK
MOUNT DESERT HANCOCK COUNTY

CROSS SECTIONS

SHEET NUMBER
18
OF 32

Date:9/25/2024
Username:
Division: BRIDGE
Filename: ...\BRIDGE\MSTA\012-023_xsect.dgn

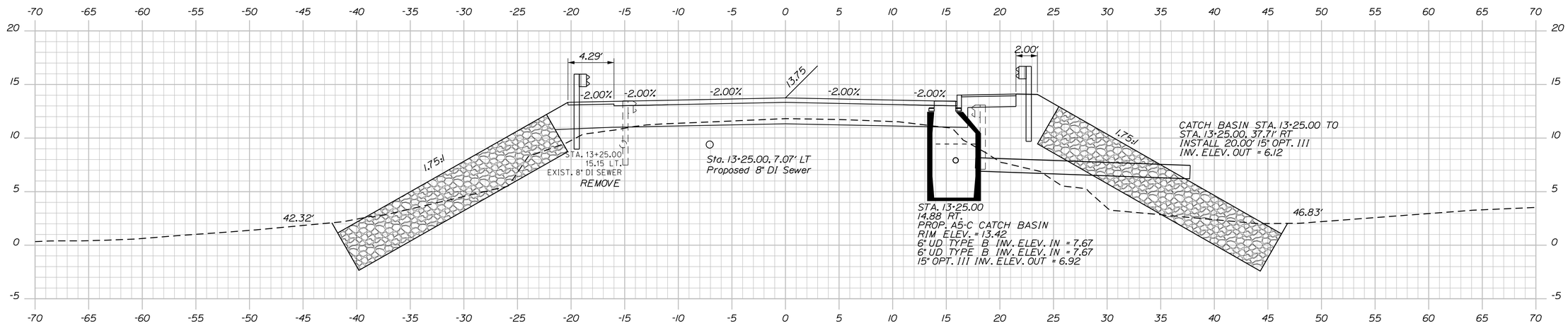

13+25.00

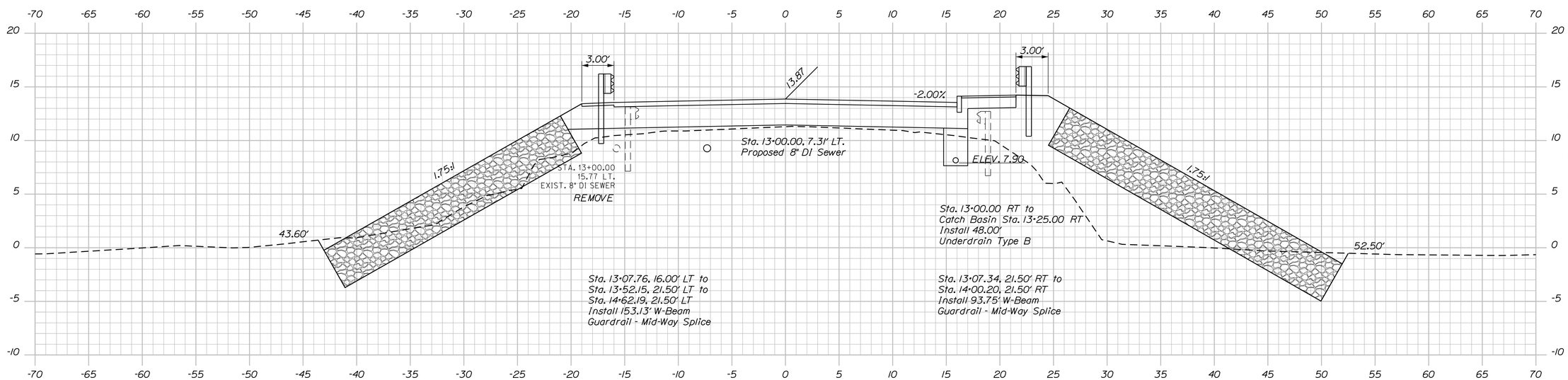

13+00.00

Sta. 13+00.00 to Sta. 13+25.00

STATE OF MAINE
DEPARTMENT OF TRANSPORTATION

02351500

WIN 023515.00

BRIDGE NO. 5244

BRIDGE PLANS

STATE OF MAINE KEITH S. WOOD No. 8243 LICENSED PROFESSIONAL ENGINEER

PROJ. MANAGER	DENVER SMALL	BY	DATE
DESIGN-DETAILED	M. CRONIN	C. JONES	
CHECKED-REVIEWED	K. WOOD	S. HUBBARD	12/1/2022
DESIGN2-DETAILED2			
DESIGN3-DETAILED3			
REVISIONS 1			
REVISIONS 2			
REVISIONS 3			
REVISIONS 4			
FIELD CHANGES			

SIGNATURE

10/4/23

P.E. NUMBER

DATE

DRAFT - NOT FOR CONSTRUCTION

BABSON BRIDGE
KITTEREDGE BROOK
MOUNT DESERT HANCOCK COUNTY

CROSS SECTIONS

SHEET NUMBER

19

OF 32

Filename: ...\BRIDGE\MSTA\012-023_xsect.dgn Division: BRIDGE Username: Date:9/25/2024

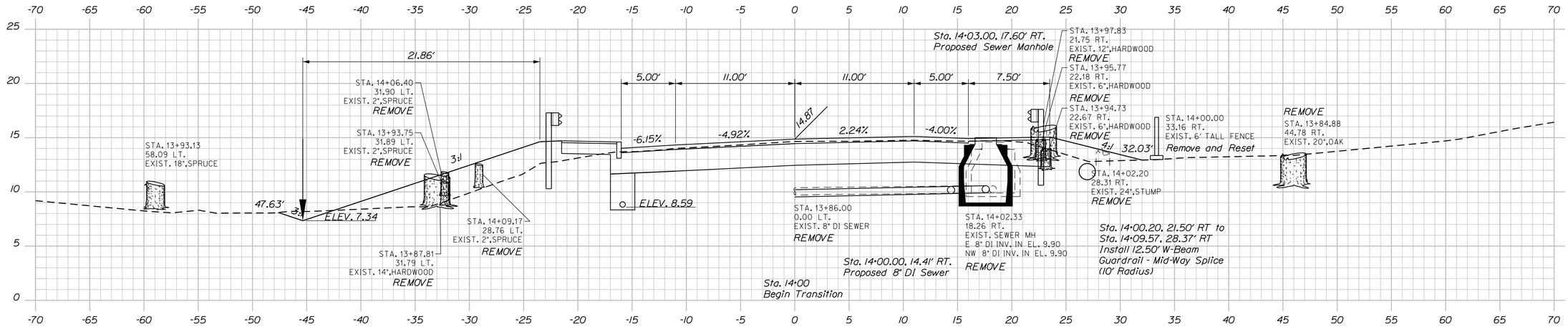

Catch Basin Sta. 13+67.76 LT to
Sta. 15+30.00 LT
Install 161.00'
Underdrain Type B

14+00.00

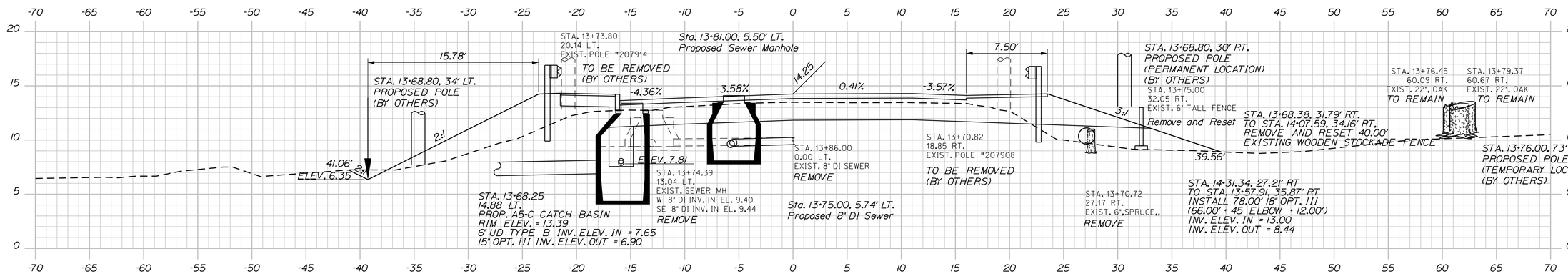

13+75.00

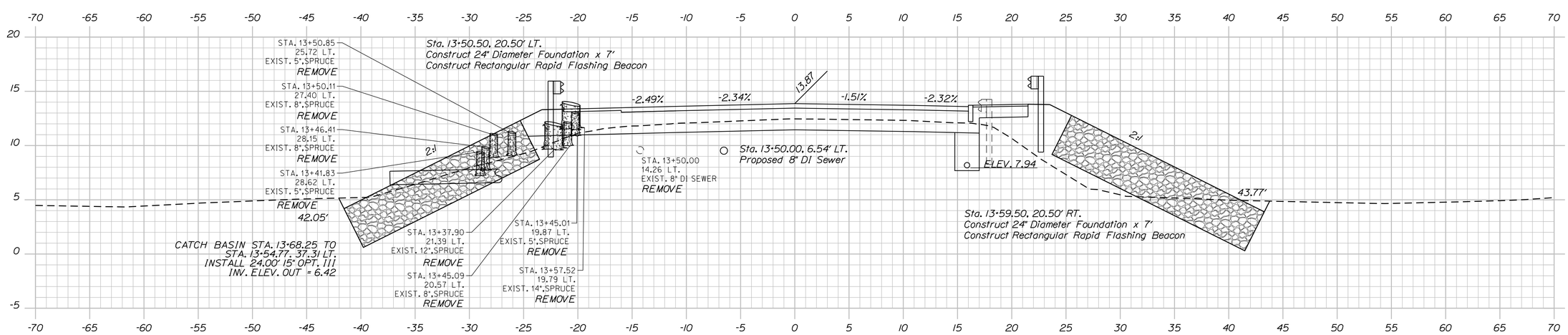

13+50.00

STATE OF MAINE
DEPARTMENT OF TRANSPORTATION

02351500

WIN 023515.00

BRIDGE PLANS

BRIDGE NO. 5244

STATE OF MAINE KEITH S. WOOD No. 10423 LICENSED PROFESSIONAL ENGINEER

Keith S. Wood 9/26/2024

PROJ. MANAGER	DENVER SMALL	BY	DATE
DESIGN-DETAILED	M. CRONIN	C. JONES	
CHECKED-REVIEWED	K. WOOD	S. HUBBARD	12/1/2022
DESIGN2-DETAILED2			
DESIGN3-DETAILED3			
REVISIONS 1			
REVISIONS 2			
REVISIONS 3			
REVISIONS 4			
FIELD CHANGES			

SIGNATURE

P.E. NUMBER 10423

DATE 9/26/2024

DRAFT - NOT FOR CONSTRUCTION

BABSON BRIDGE
KITTEREDGE BROOK
MOUNT DESERT HANCOCK COUNTY

CROSS SECTIONS

SHEET NUMBER
20
OF 32

Date:9/25/2024 Username: Division: BRIDGE Filename: ...\BRIDGE\MSTA\012-023_xsect.dgn

Sta. 13+50.00 to Sta. 14+00.00

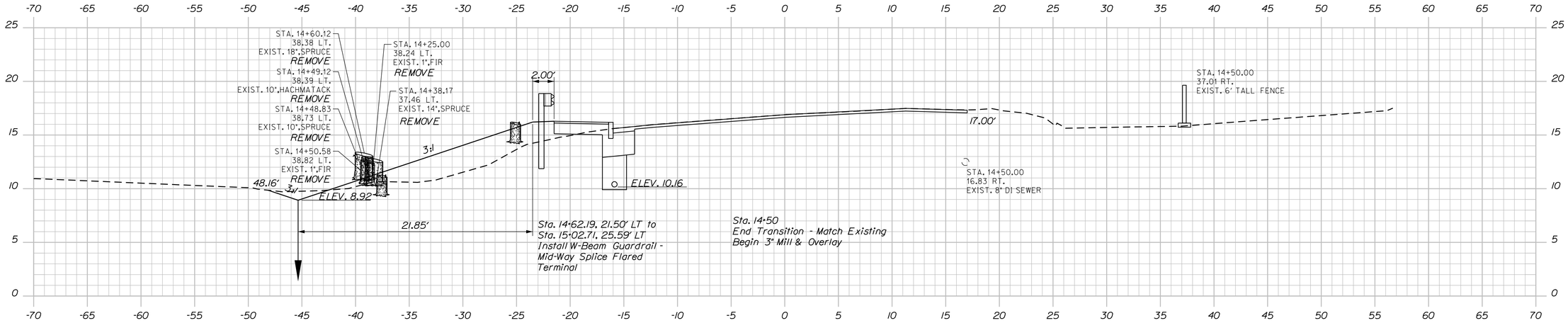

14+50.00

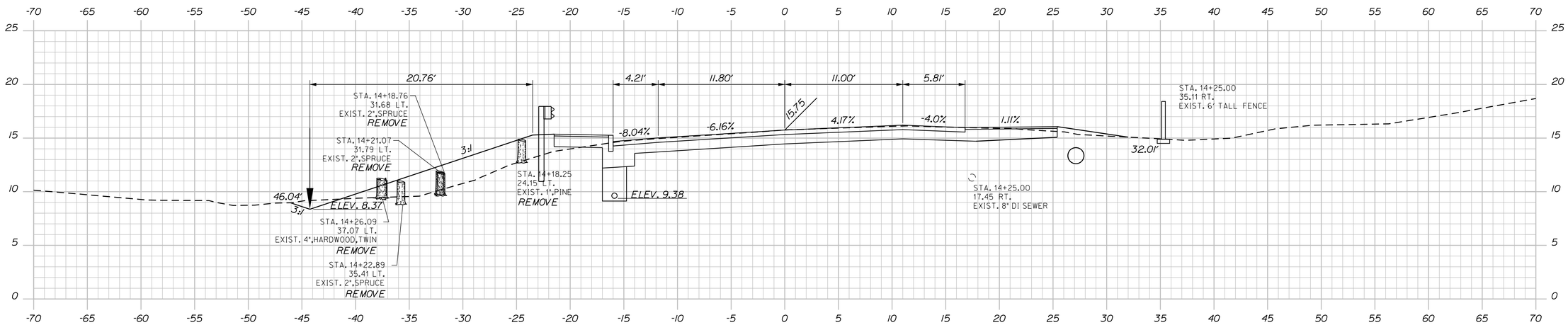

14+25.00

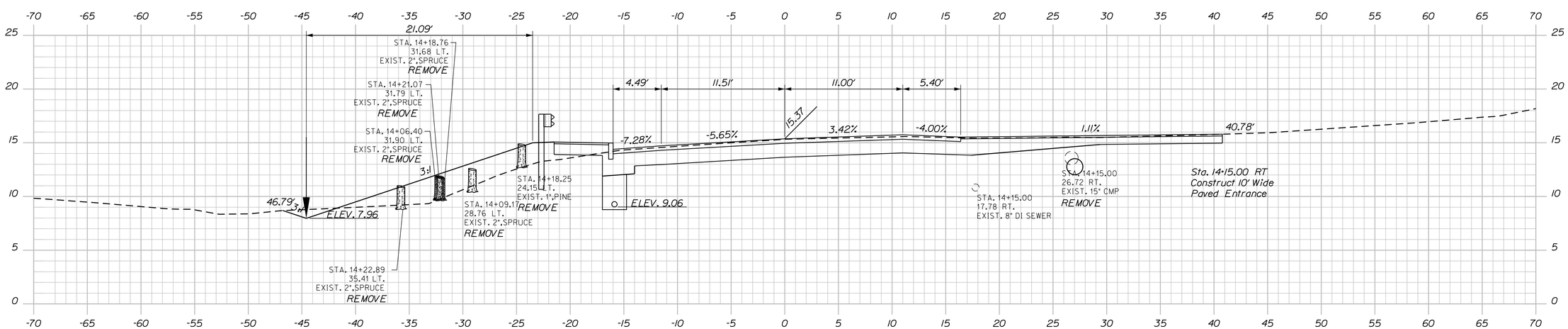

14+15.00

STATE OF MAINE
DEPARTMENT OF TRANSPORTATION

02351500

WIN 023515.00

BRIDGE NO. 5244

BRIDGE PLANS

STATE OF MAINE KEITH S. WOOD No. 10423 PROFESSIONAL ENGINEER

P.E. NUMBER 10423

SIGNATURE

DATE 9/26/2024

PROJ. MANAGER	DENVER SMALL	BY	DATE
DESIGN-DETAILED	M. CRONIN	C. JONES	12/1/2022
CHECKED-REVIEWED	K. WOOD	S. HUBBARD	
DESIGN2-DETAILED2			
DESIGN3-DETAILED3			
REVISIONS 1			
REVISIONS 2			
REVISIONS 3			
REVISIONS 4			
FIELD CHANGES			

BABSON BRIDGE
KITTEREDGE BROOK
MOUNT DESERT HANCOCK COUNTY

CROSS SECTIONS

SHEET NUMBER
21
OF 32

Filename: ...\BRIDGE\MSTA\012-023_xsect.dgn Division: BRIDGE Username: Date:9/25/2024

Sta. 14+15.00 to Sta. 14+50.00

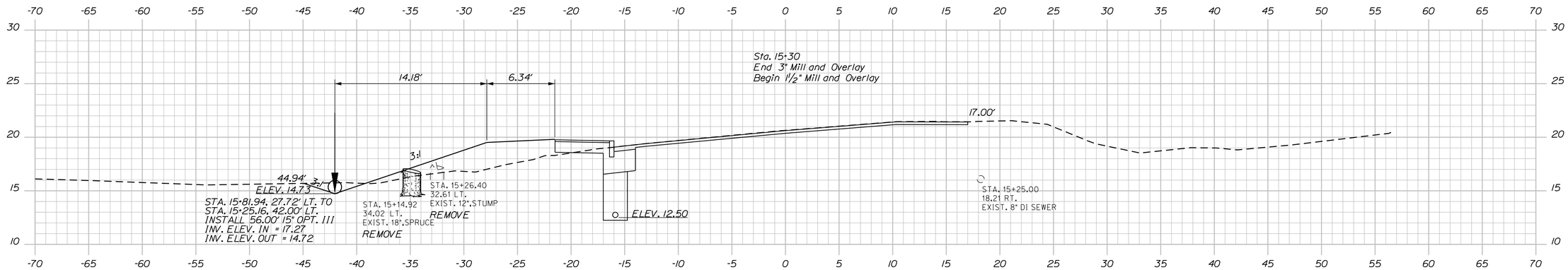

15+25.00

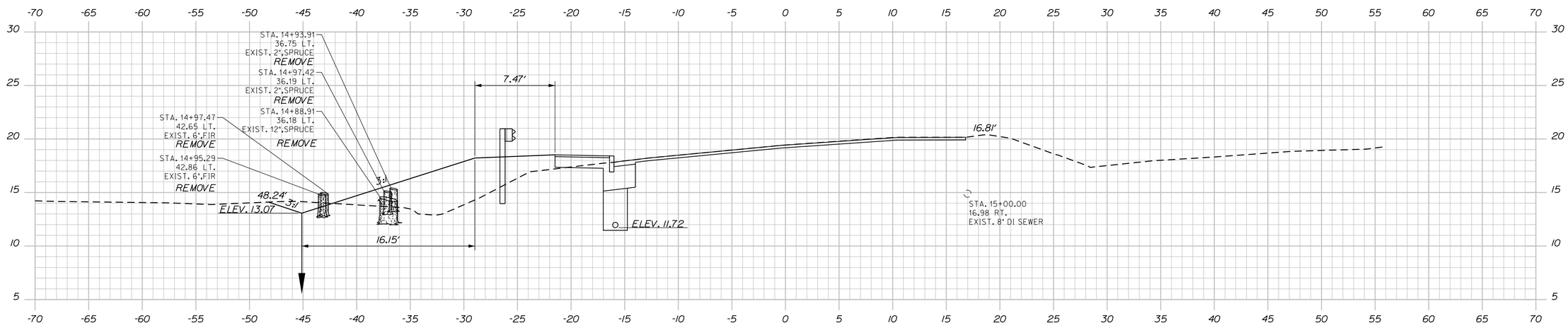

15+00.00

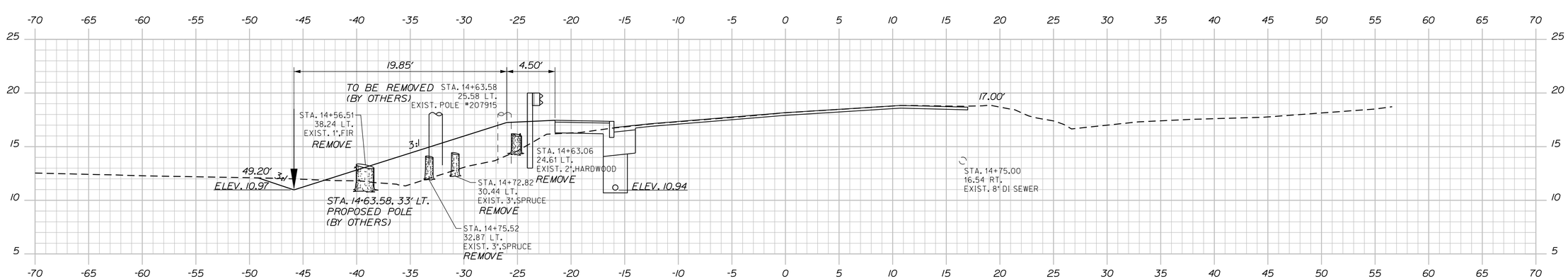

14+75.00

STATE OF MAINE
DEPARTMENT OF TRANSPORTATION

02351500

WIN
023515.00

BRIDGE PLANS

BRIDGE NO. 5244

STATE OF MAINE
KEITH S. WOOD
No. 10423
LICENSED
PROFESSIONAL ENGINEER

PROJ. MANAGER	DENVER SMALL	BY	DATE
DESIGN-DETAILED	M. CRONIN	C. JONES	
CHECKED-REVIEWED	K. WOOD	S. HUBBARD	12/2022
DESIGN2-DETAILED2			
DESIGN3-DETAILED3			
REVISIONS 1			
REVISIONS 2			
REVISIONS 3			
REVISIONS 4			
FIELD CHANGES			

SIGNATURE
P.E. NUMBER 10423
DATE 4/26/2024

BABSON BRIDGE
KITTEREDGE BROOK
MOUNT DESERT HANCOCK COUNTY

CROSS SECTIONS

SHEET NUMBER
22
OF 32

Filename: ...\BRIDGE\MSTA\012-023_xsect.dgn Division: BRIDGE Username: Date:9/25/2024

Sta. 14+75.00 to 15+25

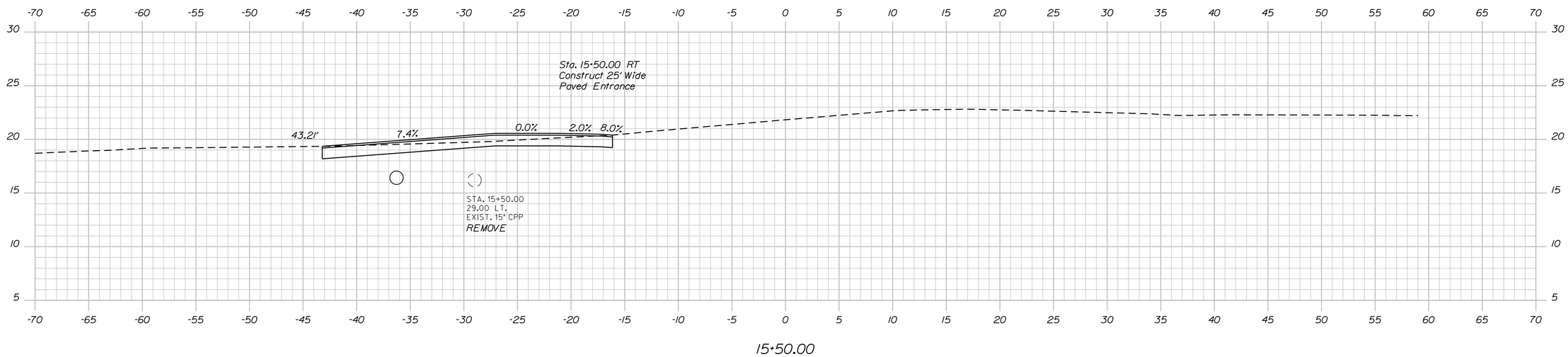

15+50.00

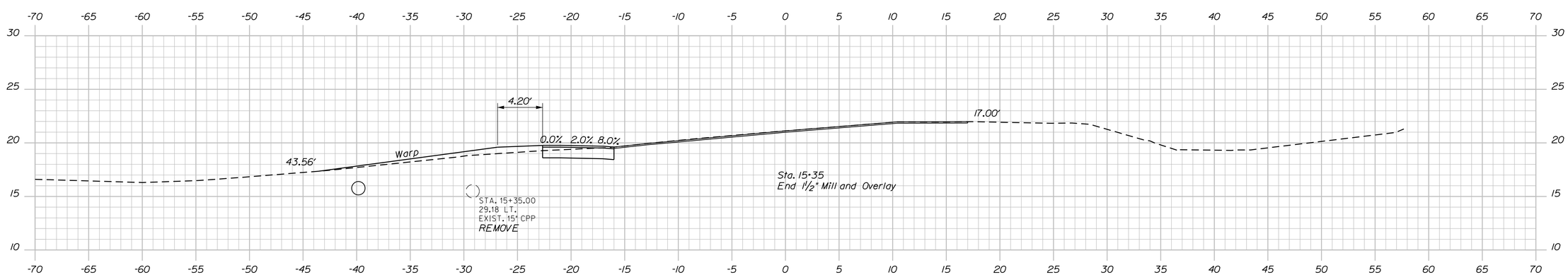

15+35.00

STATE OF MAINE
DEPARTMENT OF TRANSPORTATION

02351500

WIN 023515.00

BRIDGE NO. 5244

BRIDGE PLANS

STATE OF MAINE KEITH S. WOOD No. 10423 LICENSED PROFESSIONAL ENGINEER

PROJ. MANAGER	DENVER SMALL	BY	DATE
DESIGN-DETAILED	M. CRONIN	C. JONES	
CHECKED-REVIEWED	K. WOOD	S. HUBBARD	12/2022
DESIGN2-DETAILED2			
DESIGN3-DETAILED3			
REVISIONS 1			
REVISIONS 2			
REVISIONS 3			
REVISIONS 4			
FIELD CHANGES			

P.E. NUMBER 10423

DATE 9/26/2024

BABSON BRIDGE
KITTEREDGE BROOK
MOUNT DESERT HANCOCK COUNTY

CROSS SECTIONS

SHEET NUMBER

23

OF 32

Date:9/25/2024 Username: Division: BRIDGE Filename: ...\BRIDGE\MSTA\012-023_xsect.dgn

Sta. 15+35.00 to 15+50.00

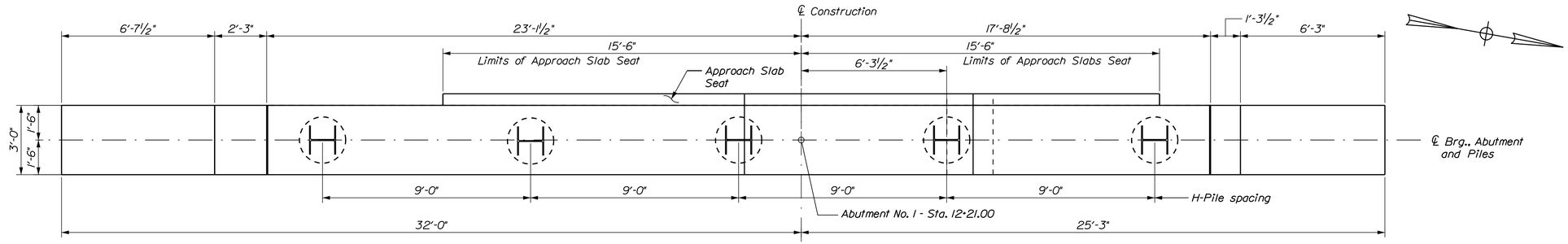

PLAN ~ ABUTMENT NO. 1

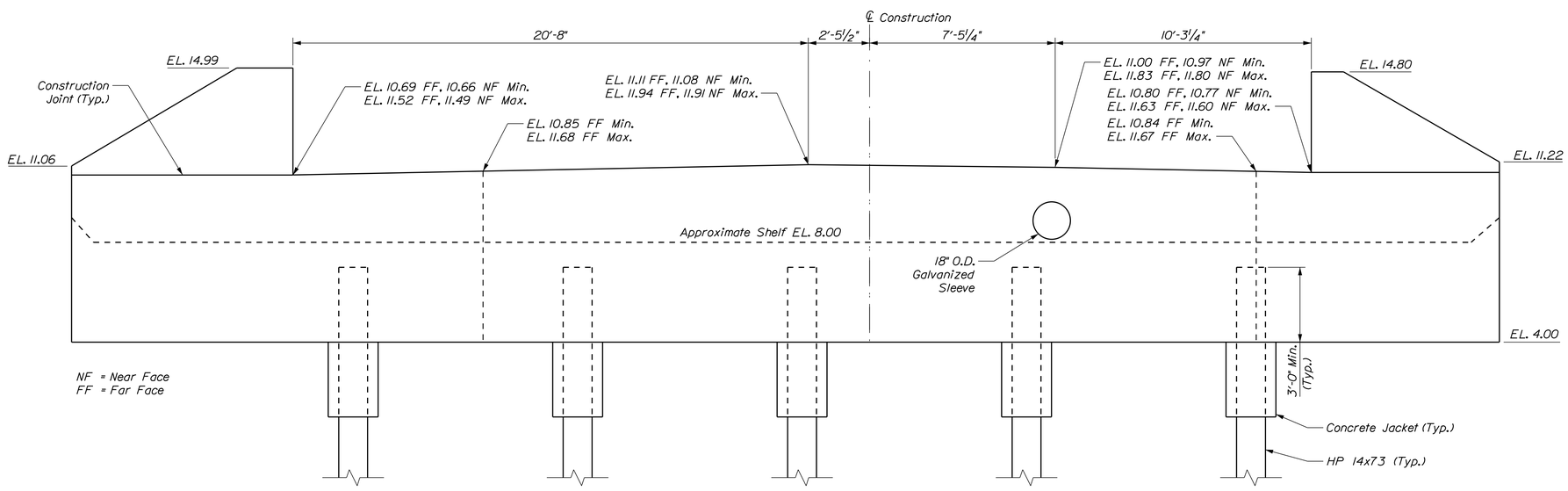

ELEVATION ~ ABUTMENT NO. 1

PILE NOTES

1. The maximum factored pile load is 310 kips at the Strength Limit State.

2. Abutment No. 1 Piles shall be driven to the required resistance on or within bedrock in accordance with Standard Specification Section 501.

3. Estimate of piles required:

   Abutment No. 1: 5 ~ HP 14x73 @ 30 feet (Driven)
   Abutment No. 2: 5 ~ HP 14x73 @ 25 feet (Rock Socketed)

The order lengths of the driven piles at both abutments shall include an additional 5 feet of length to accommodate dynamic pile testing equipment for each test pile at Abutment No. 1 and bedrock variability at Abutment No. 2.

4. H-pile material shall be ASTM A572, Grade 50.

5. H-pile splices shall be in accordance with Standard Detail 501(03).

6. All driven piles shall be equipped with a pile tip in accordance with Standard Specifications Subsections 501.048, Prefabricated Pile Tips and 711.10 H-Beam Piles, Spliced and Tips.

7. All rock socketed piles shall be equipped with a bearing plate at the pile tip, as shown on the plans. All costs associated with fabrication and installation of the bearing plates shall be considered incidental to Pay Item 501.502, Rock-Socketed H-Piles.

8. The Contractor shall perform and submit a wave equation analysis for review and acceptance by the Resident for Abutment No. 1. The maximum allowable driving stress is 0.90 times Fy. The submittal analyses shall include the proposed stopping criteria based on the wave equation analysis and the proposed driving system.

9. The Contractor shall perform one dynamic load test with 24-hour (minimum) restrike tests to confirm the nominal resistance of the piles at Abutment No. 1. The required nominal resistance for the pile is the factored axial pile load divided by a resistance factor of 0.65 per LRFD Specifications. The dynamic test shall be performed on the first production pile driven at Abutment No. 1.

10. Piles shall not be out of position shown by more than 2 inches in any direction.

11. Abutment No. 2 piles shall be installed in accordance with Special Provision Section 501, Rock Socketed H-Pile Foundation.

ABUTMENT NOTES

1. Structural Earth Excavation required more than 12 inches below the bottom of the structure will be paid for in accordance with Standard Specifications Section 206, Structural Excavation.

2. Reinforcing steel shall have a minimum concrete cover of 2 inches unless otherwise noted.

3. Place drains with a 4-inch diameter in the breastwall and wingwalls at 10 feet maximum spacing. The exact location will be determined by the Resident.

4. Cover joints where waterstops are not required in accordance with Standard Details Section 502.

5. Place the parapet portions of the wingwalls after erection of the Detail Build Superstructure.

6. Payment for the concrete jackets around the tops of the H-piles will not be paid for directly but will be considered incidental to Pay Item 502.219, Structural Concrete Abutments and Retaining Walls. Fill Concrete may be used for the concrete jackets.

7. The estimated quantity for abutment concrete for Pay Item 502.219, Structural Concrete Abutments and Retaining Walls is based upon the assumed NEXT F Superstructure, and shall be paid for at the lump sum price. No adjustments shall be made to the lump sum quantity if a different superstructure is chosen by the Contractor.

8. The rebar shown plan sheets 25 and 27 and summarized in the rebar schedule shown on plan sheet 31 is based upon the assumed NEXT F Superstructure. If the Contractor chooses a different superstructure, the rebar design and schedule for the abutments shall be revised by the Contractor and submitted as part of the superstructure design per Special Provision Section 531 - Bridge Superstructure Detail Build.

9. Install Drainage Geocomposite behind the abutments and wingwalls up to the approach slab seat elevation in accordance with Special Provision Section 620, Drainage Geocomposite.

STATE OF MAINE
DEPARTMENT OF TRANSPORTATION

02351500

WIN 023515.00

BRIDGE PLANS

BRIDGE NO. 5244

STATE OF MAINE KEITH S. WOOD No. 10423 LICENSED PROFESSIONAL ENGINEER

Keith S. Wood 4/26/2024

P.E. NUMBER 10423

SIGNATURE

4/26/2024

DATE

		BY	DATE
PROJ. MANAGER	DENVER SMALL		
DESIGN-DETAILED	K. WOOD	K. WOOD	4/2024
CHECKED-REVIEWED	A. FLOREN	M. KELLY	4/2024
DESIGN2-DETAILED2			
DESIGN3-DETAILED3			
REVISIONS 1			
REVISIONS 2			
REVISIONS 3			
REVISIONS 4			
FIELD CHANGES			

BABSON BRIDGE
KITTEREDGE BROOK
MOUNT DESERT HANCOCK COUNTY

ABUTMENT NO. 1
PLAN AND ELEVATION

SHEET NUMBER

24

OF 32

Filename: ...\MSTA\024_Abutment Plan.dgn Division: BRIDGE Username: Date:9/25/2024

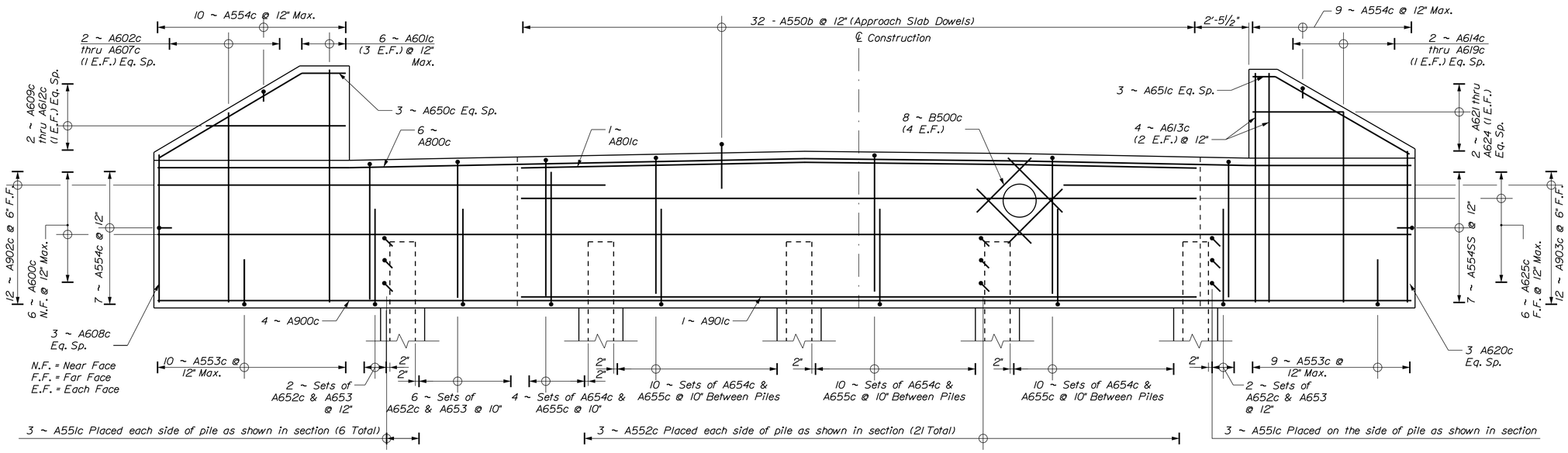

ELEVATION ~ ABUTMENT NO. 1

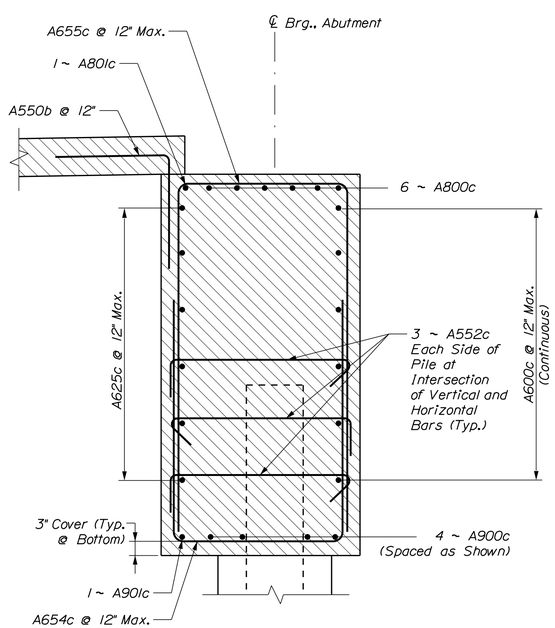

ABUTMENT SECTION AT APPROACH SLAB

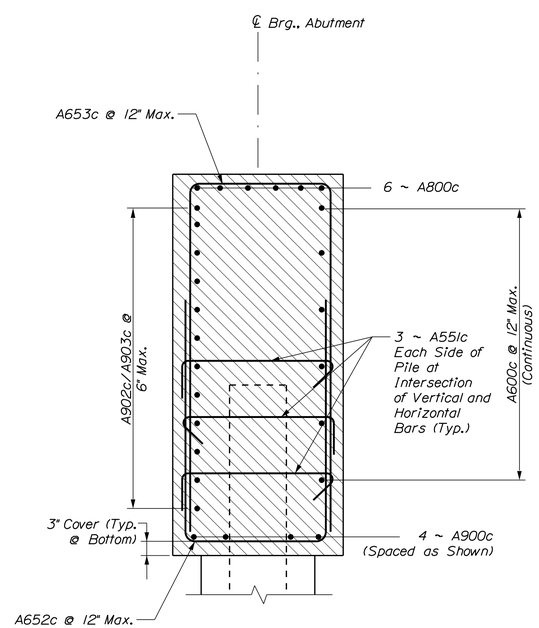

ABUTMENT SECTION

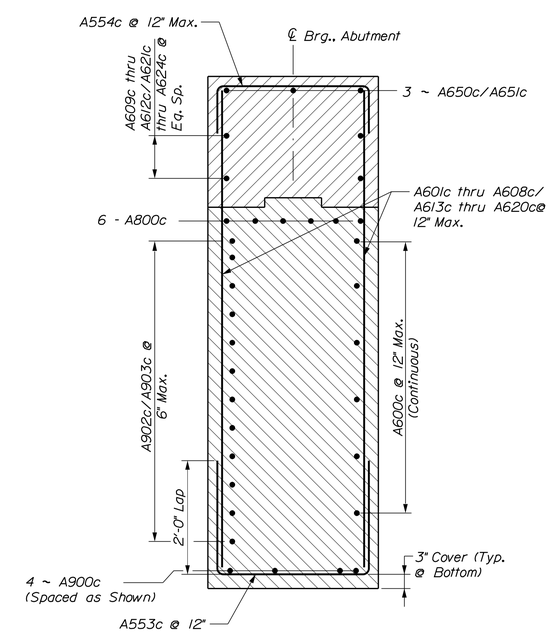

WINGWALL SECTION

STATE OF MAINE
DEPARTMENT OF TRANSPORTATION

02351500

WIN 023515.00

BRIDGE PLANS

BRIDGE NO. 5244

STATE OF MAINE KEITH S. WOOD No. 10423 PROFESSIONAL ENGINEER

PROJ. MANAGER	DENVER SMALL	BY	DATE
DESIGN-DETAILED	K. WOOD	K. WOOD	8/2024
CHECKED-REVIEWED	A. FLOREN	M. KELLY	8/2024
DESIGN2-DETAILED2			
DESIGN3-DETAILED3			
REVISIONS 1			
REVISIONS 2			
REVISIONS 3			
REVISIONS 4			
FIELD CHANGES			

SIGNATURE

P.E. NUMBER 10423

DATE 9/26/2024

BABSON BRIDGE
KITTEREDGE BROOK
MOUNT DESERT HANCOCK COUNTY

ABUTMENT NO. 1
REINFORCEMENT

SHEET NUMBER
25
OF 32

Filename: ...\MSTA\025_Abutment Rebar.dgn Division: BRIDGE Username: Date:9/25/2024

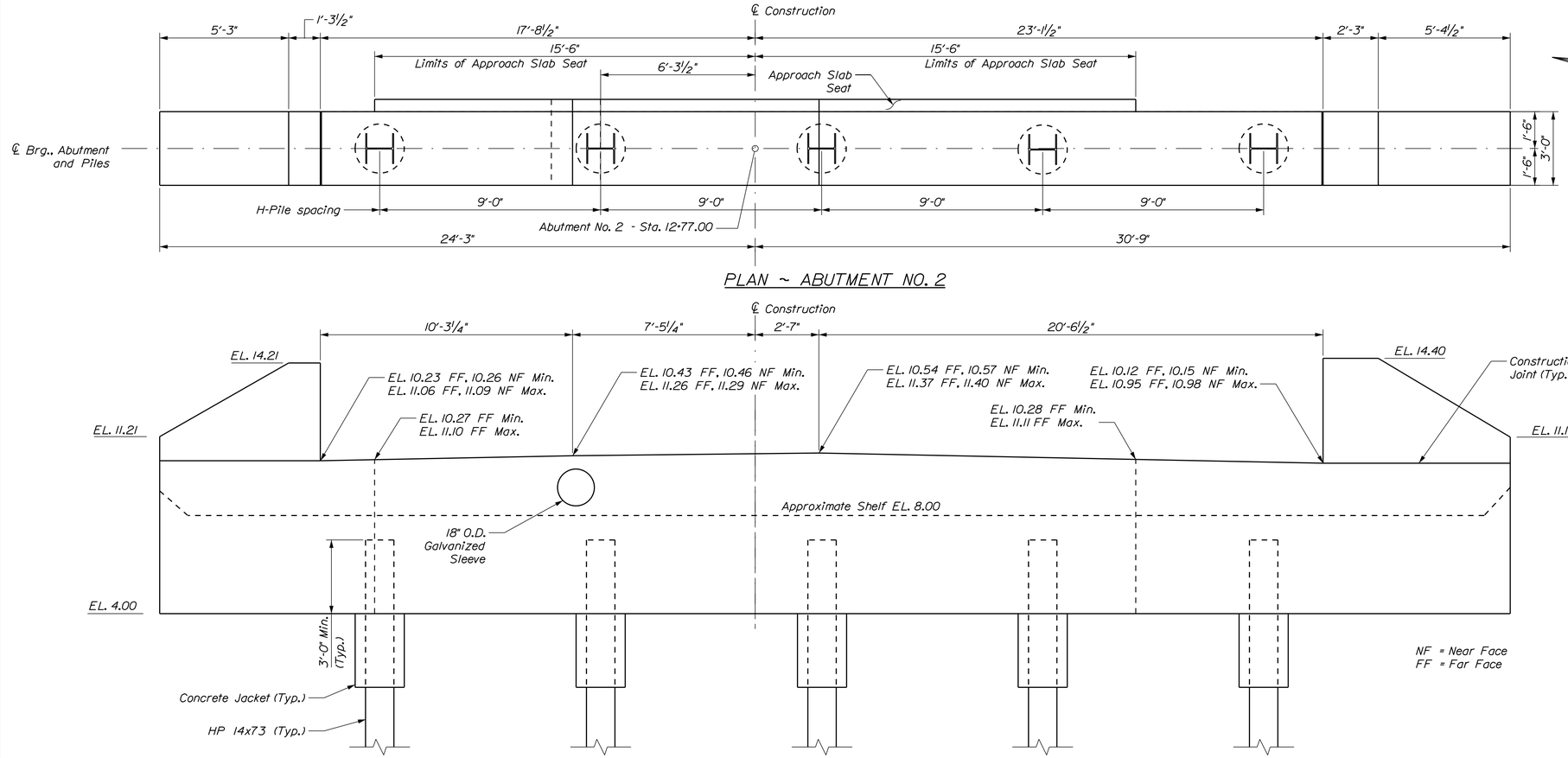

PLAN ~ ABUTMENT NO. 2

ELEVATION ~ ABUTMENT NO. 2

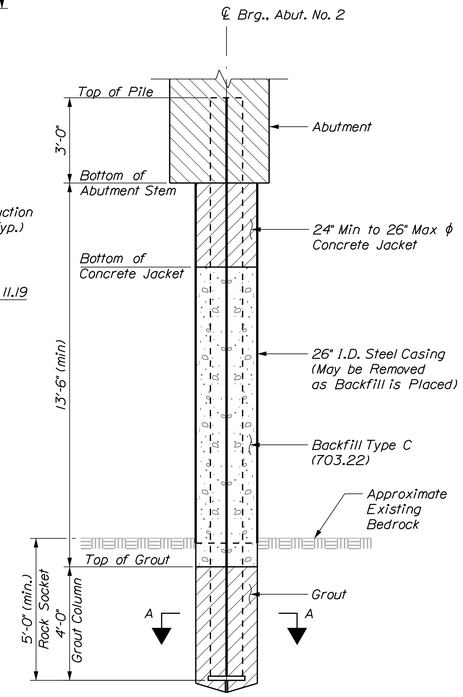

ROCK SOCKETED PILE DETAIL

(Abutment No. 2 Only)

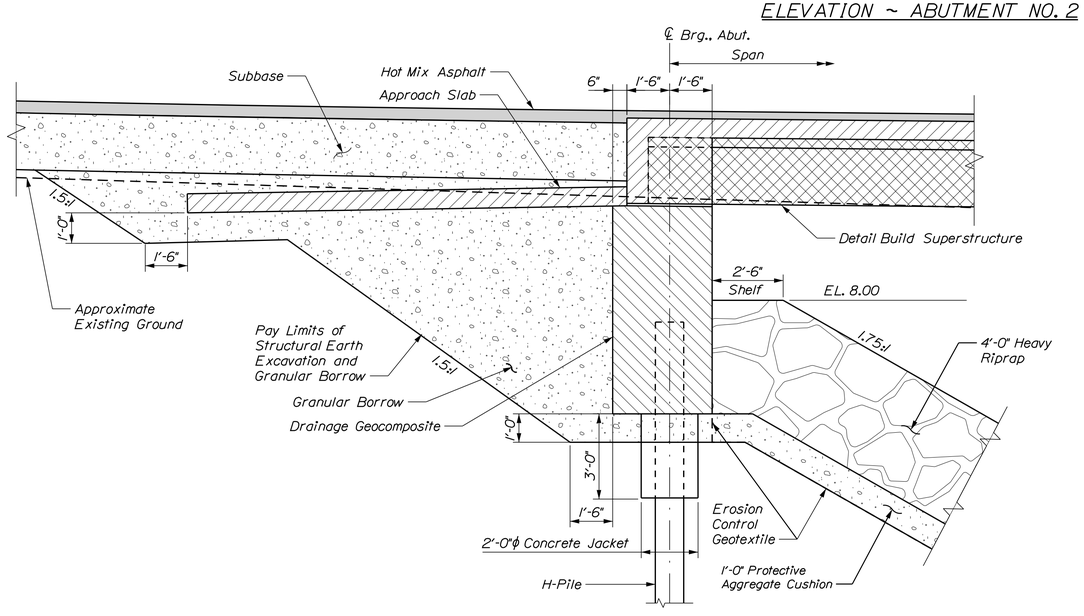

ABUTMENT SECTION

(Abutment No. 1 Shown, Abutment No. 2 Similiar)

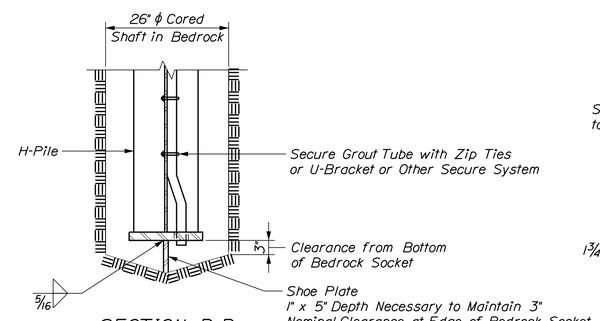

SECTION B-B

(Shown prior to grouting)

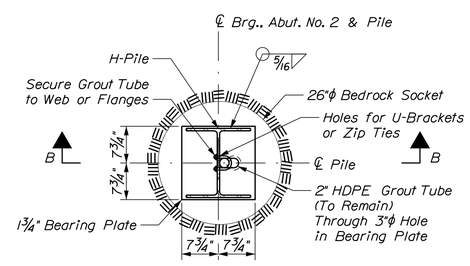

SECTION A-A

(Shown prior to grouting)

STATE OF MAINE
DEPARTMENT OF TRANSPORTATION

02351500

WIN 023515.00

BRIDGE PLANS

BRIDGE NO. 5244

STATE OF MAINE KEITH S. WOOD No. 10423 LICENSED PROFESSIONAL ENGINEER

P.E. NUMBER 10423

SIGNATURE

DATE 4/26/2024

PROJ. MANAGER	DENVER SMALL	BY	DATE
DESIGN-DETAILED	K. WOOD	K. WOOD	4\2024
CHECKED-REVIEWED	A. FLOREN	M. KELLY	4\2024
DESIGN2-DETAILED2			
DESIGN3-DETAILED3			
REVISIONS 1			
REVISIONS 2			
REVISIONS 3			
REVISIONS 4			
FIELD CHANGES			

BABSON BRIDGE
KITTEREDGE BROOK
MOUNT DESERT HANCOCK COUNTY

ABUTMENT NO. 2
PLAN AND ELEVATION

SHEET NUMBER

26

OF 32

Filename: ...\026_Abutment No 2 Plan.dgn Division: BRIDGE Username: Date:9/25/2024

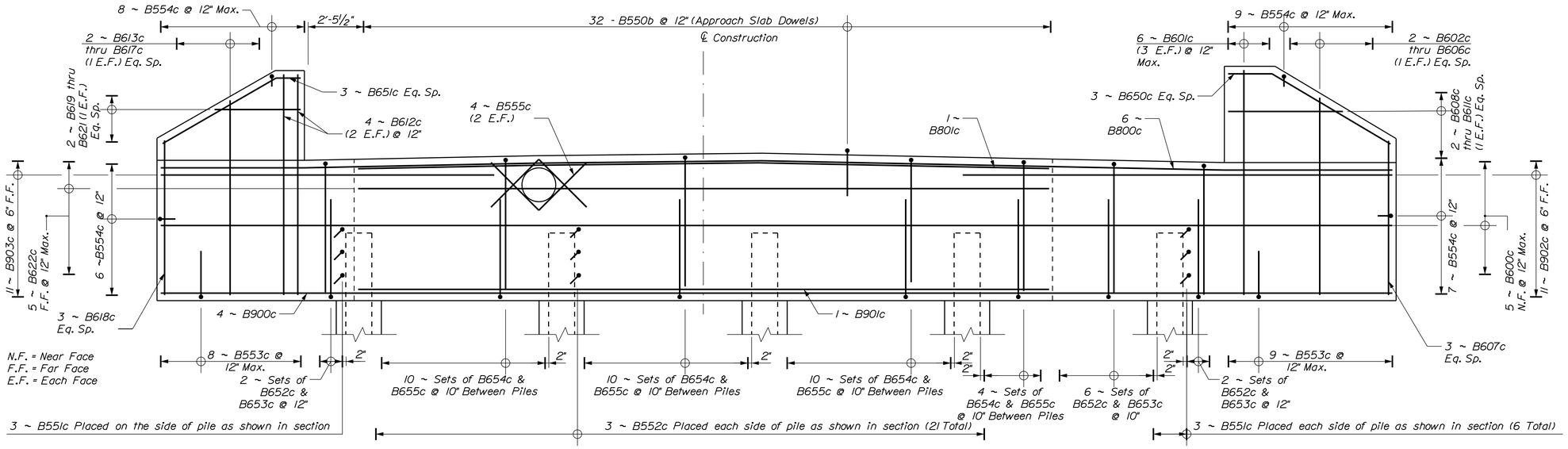

ELEVATION ~ ABUTMENT NO. 2

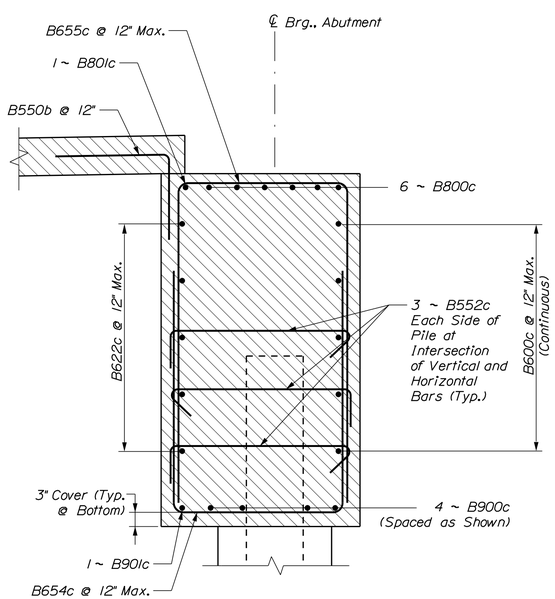

ABUTMENT SECTION AT APPROACH SLAB

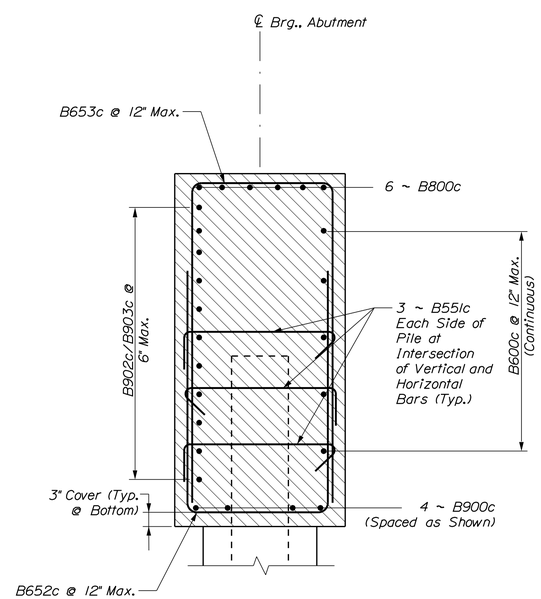

ABUTMENT SECTION

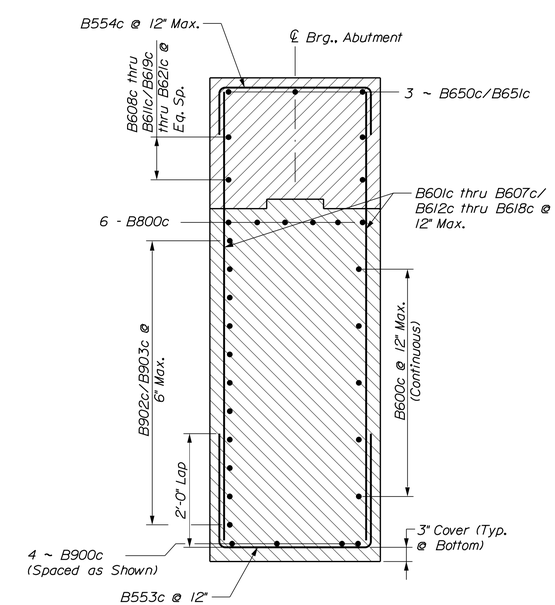

WINGWALL SECTION

STATE OF MAINE
DEPARTMENT OF TRANSPORTATION

02351500

WIN 023515.00

BRIDGE PLANS

BRIDGE NO. 5244

STATE OF MAINE KEITH S. WOOD No. 10423 LICENSED PROFESSIONAL ENGINEER

P.E. NUMBER 10423

SIGNATURE

DATE 9/26/2024

PROJ. MANAGER	DENVER SMALL	BY	DATE
DESIGN-DETAILED	K. WOOD	K. WOOD	8/2024
CHECKED-REVIEWED	A. FLOREN	M. KELLY	8/2024
DESIGN2-DETAILED2			
DESIGN3-DETAILED3			
REVISIONS 1			
REVISIONS 2			
REVISIONS 3			
REVISIONS 4			
FIELD CHANGES			

BABSON BRIDGE
KITTEREDGE BROOK
MOUNT DESERT HANCOCK COUNTY

ABUTMENT NO. 2
REINFORCEMENT

SHEET NUMBER
27
OF 32

Filename: ...\027_Abutment No. 2 Rebar.dgn Division: BRIDGE Username: Date:9/25/2024

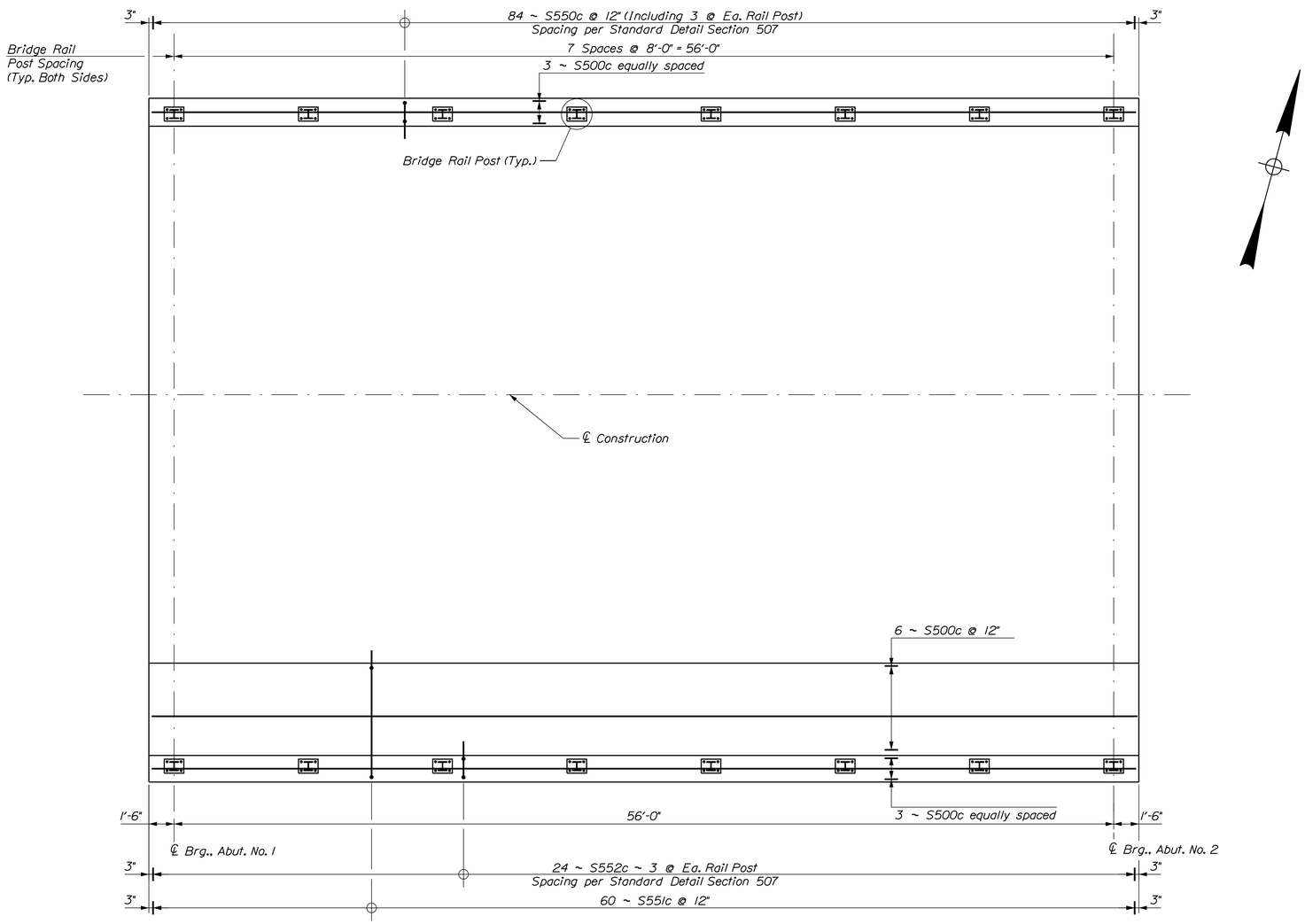

SUPERSTRUCTURE PLAN

SUPERSTRUCTURE NOTES

1. Reinforcing steel shall have a minimum concrete cover of 2 inches unless otherwise noted.

2. Form a one inch V-groove on the fascias at the horizontal joint between the curb and slab and between the cast-in-place slab and the detail build superstructure.

3. The superstructure slab and end diaphragm concrete shall be placed in one continuous operation and shall be kept plastic until the entire placement has been made.

4. The Detail Build Superstructure option shall have a minimum clear span of 53 feet and a low chord at or above elevation 10.40.

5. For the precast beam detail build options, the bearing elevations and deck thickness shall be adjusted in accordance with Special Provision 535, Precast, Prestressed Concrete Superstructure, Camber.

6. Both top and bottom mats of deck reinforcing shall be placed parallel to the finished profile. reinforcing steel shall have a constant top cover of 2 inches. Bottom concrete cover may be variable with a minimum cover of 1½-inch.

7. End diaphragm concrete will be paid for under Pay Item 531.511, Bridge Superstructure - Detail Build and shall be placed with the deck.

8. Place one piece of ½-inch thick preformed expansion joint filler between the end diaphragm and wingwall parapet. Expansion joint filler shall extend from the bridge seat to ½-inch below the top of wingwall parapet and the full wingwall parapet thickness. The preformed expansion joint filler shall be sealed with ½-inch by ½-inch silicone joint sealant minus ½-inch on each side. The preformed expansion joint filler and silicone joint sealant will be considered incidental to Pay Item 531.511, Bridge Superstructure - Detail Build.

9. The Contractor shall alternate splice locations of all bars.

10. The concrete sidewalk shall be constructed per Standard Detail 502(06), except the dimension from the top of the wearing surface to the top of the curb shall be 7 inches.

11. The Membrane Waterproofing shall wrap down over the end diaphragm and one foot onto the approach slab. The Contractor shall form a 6" x 6" mortared chamfer between the approach slab and the end diaphragm. Payment for mortared chamfer shall be considered incidental to Pay Item 508.14, High Performance Waterproofing Membrane.

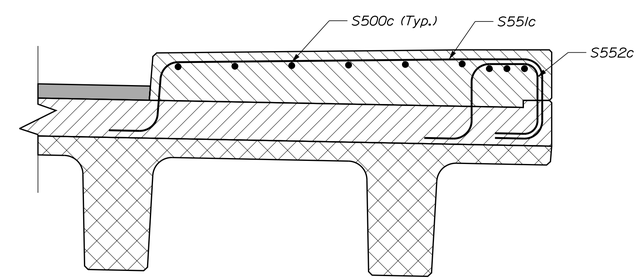

SIDEWALK REINFORCING SECTION

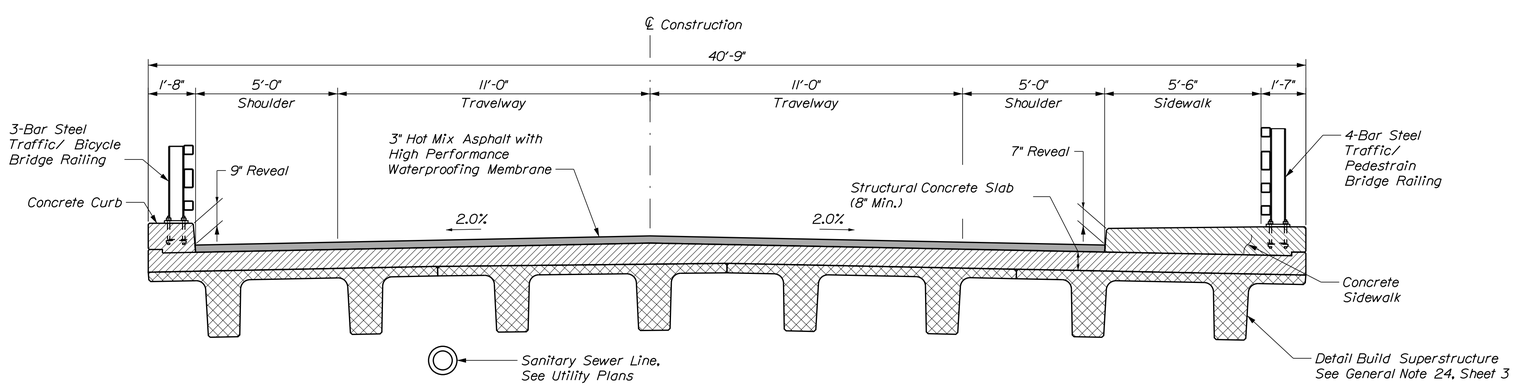

PROPOSED BRIDGE SECTION

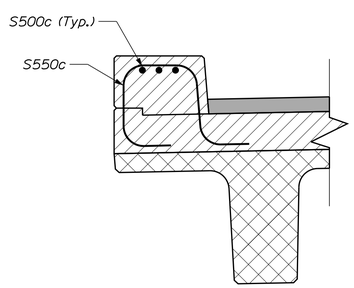

CURB REINFORCING SECTION

STATE OF MAINE
DEPARTMENT OF TRANSPORTATION

02351500

WIN 023515.00

BRIDGE NO. 5244

BRIDGE PLANS

STATE OF MAINE KEITH S. WOOD NO. 10423 PROFESSIONAL ENGINEER

PROJ. MANAGER	DENVER SMALL	BY	DATE
DESIGN-DETAILED	K. WOOD	K. WOOD	4\2024
CHECKED-REVIEWED	A. FLOREN	M. KELLY	4\2024
DESIGN2-DETAILED2			
DESIGN3-DETAILED3			
REVISIONS 1			
REVISIONS 2			
REVISIONS 3			
REVISIONS 4			
FIELD CHANGES			

SIGNATURE
P.E. NUMBER 10423
DATE 4/26/2024

BABSON BRIDGE
KITTEREDGE BROOK
MOUNT DESERT HANCOCK COUNTY

SUPERSTRUCTURE PLAN

SHEET NUMBER
28
OF 32

Filename: ...\MSTA\028_Superstructure.dgn Division: BRIDGE Username: Date:9/25/2024

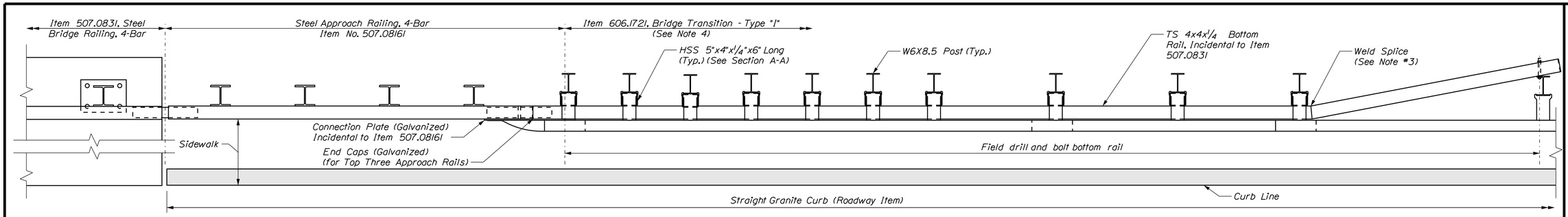

PLAN - STEEL APPROACH RAILING, 4 BAR

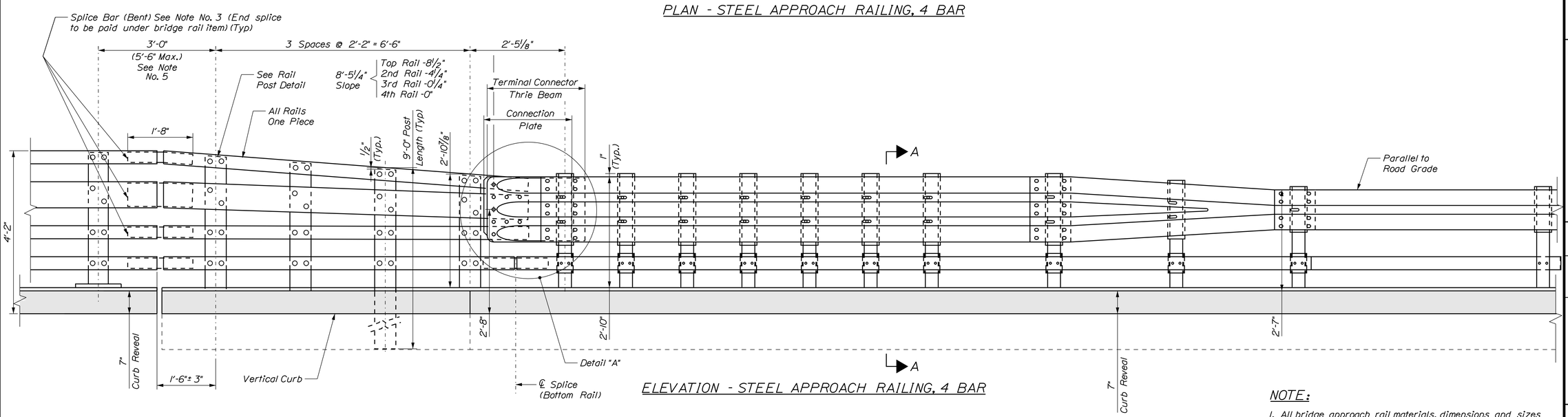

ELEVATION - STEEL APPROACH RAILING, 4 BAR

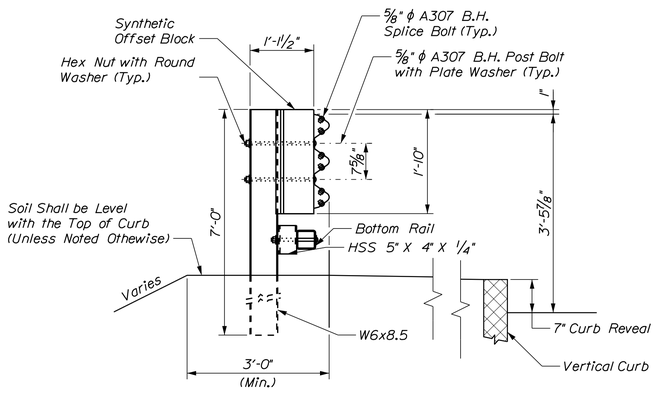

SECTION A-A (POST RAIL ASSEMBLY)

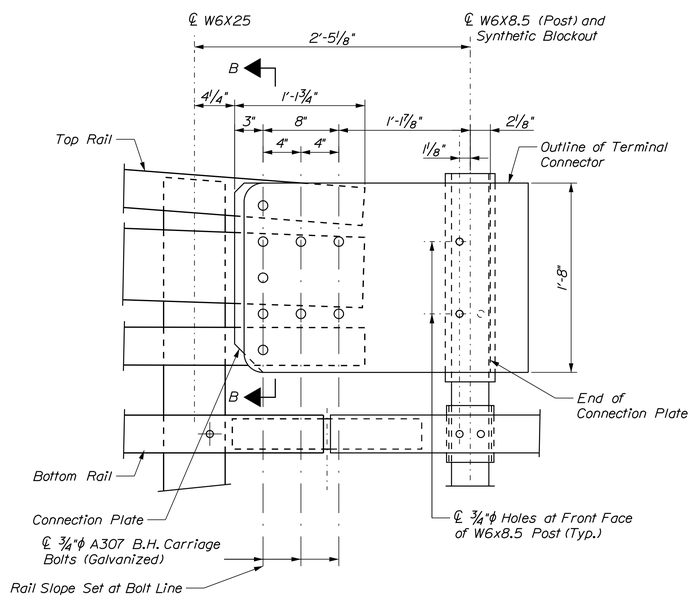

DETAIL A

(Overlapping of Double nested Thrie-Beam not Shown for Clarity)

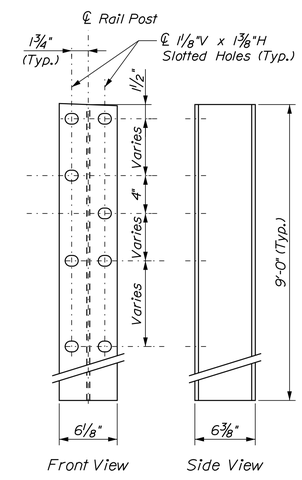

RAIL POST (W6x25)

NOTE:

1. All bridge approach rail materials, dimensions and sizes shall be the same as those of the bridge rail, unless otherwise noted. See MaineDOT Standard Details Section 507, Bridge Rail for additional information.

2. Carriage bolts shall be ASTM A307, and nuts shall be ASTM A563 Grade A or better (galvanized).

3. Weld splice bar to fit bend. Use complete joint penetration butt weld.

4. Standard Bridge Transition may require longer posts to account for higher rail height. No additional payment will be made for this modification.

5. Three foot spacing to first post on bridge is standard. For longer expansion joints, the first post on the bridge may be located up to 5'-6" from the previous post in the approach.

6. Dimensions shown are designed to accommodate a 7" reveal bridge curb with a battered face. Dimensions shall be adjusted to fit other situations as required.

7. For additional details, refer to MaineDOT Standard Details Section 507 for 3-Bar Rail. For Section B-B, refer to Standard Detail 507(24).

STATE OF MAINE
DEPARTMENT OF TRANSPORTATION

02351500

WIN 023515.00

BRIDGE PLANS

BRIDGE NO. 5244

STATE OF MAINE KEITH S. WOOD No. 10423 LICENSED PROFESSIONAL ENGINEER

P.E. NUMBER 10423 SIGNATURE

9/26/2024 DATE

		BY	DATE
PROJ. MANAGER	DENVER SMALL		
DESIGN-DETAILED	K. WOOD	K. WOOD	4/2024
CHECKED-REVIEWED	A. FLOREN	M. KELLY	4/2024
DESIGN2-DETAILED2			
DESIGN3-DETAILED3			
REVISIONS 1			
REVISIONS 2			
REVISIONS 3			
REVISIONS 4			
FIELD CHANGES			

BABSON BRIDGE
KITTEREDGE BROOK
MOUNT DESERT HANCOCK COUNTY

STEEL APPROACH RAILING
4-BAR

SHEET NUMBER

29

OF 32

Filename: ...\029_4_Bar_Transition_Barrier.dgn Division: BRIDGE Username: Date:9/25/2024

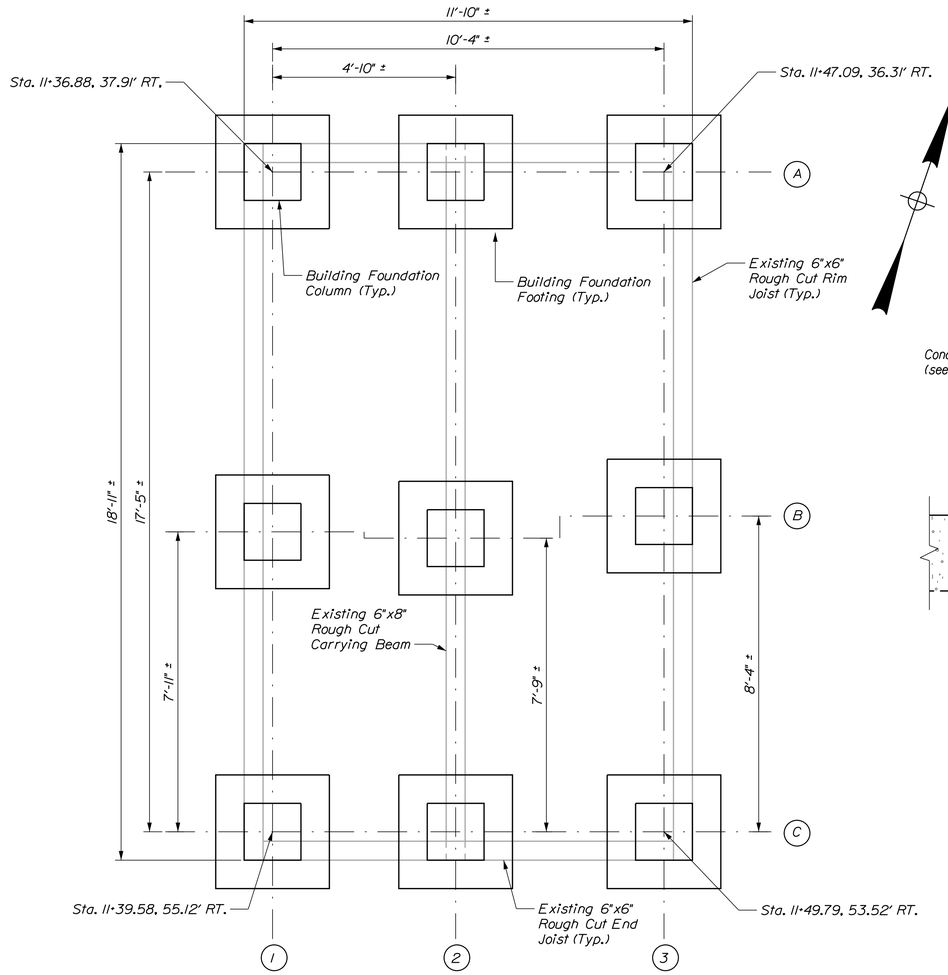

BUILDING FOUNDATION LAYOUT

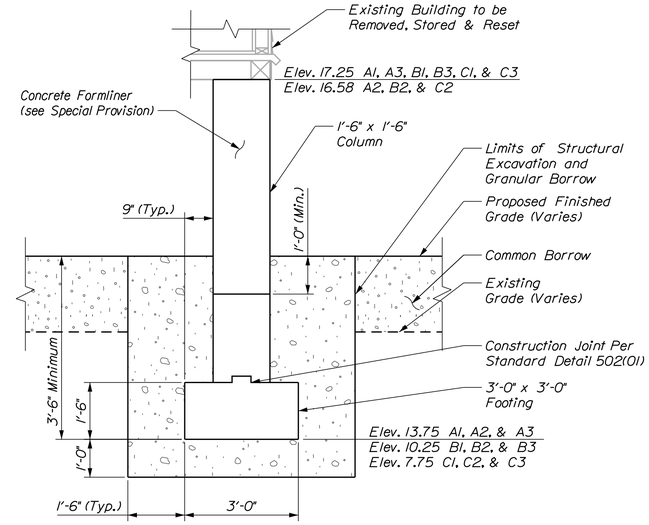

TYPICAL BUILDING FOUNDATION SECTION

FOUNDATION NOTES

1. The maximum factored applied footing pressure is 1.55 ksf at the Strength I Limit State.

2. Structural Earth Excavation required more than 12 inches below the bottom of the footings will be paid for in accordance with Standard Specifications Section 206, Structural Excavation.

3. Building foundations shall be backfilled with Granular Borrow. Pay limits will be as shown in the details on this sheet.

4. Reinforcing steel shall have a minimum concrete cover of 2 inches in the walls and 3 inches in the footings unless otherwise noted.

5. The Contractor shall field verify all dimensions prior to the removal of the existing building. Any discrepancies shall be reported to the Resident.

6. Removing, storing, and resetting the existing building shall be per Special Provision Section 202, Removing, Storing, And Resetting Structures.

7. Building foundations shall be constructed per Special Provision Section 502, Structrual Concrete, Miscellaneous Building Foundation.

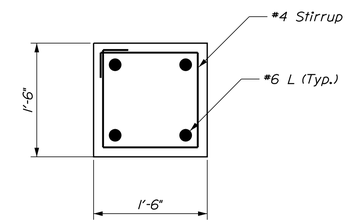

BUILDING FOUNDATION COLUMN REINFORCEMENT

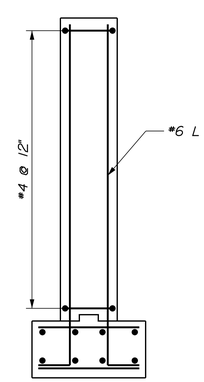

TYPICAL BUILDING FOUNDATION REINFORCEMENT

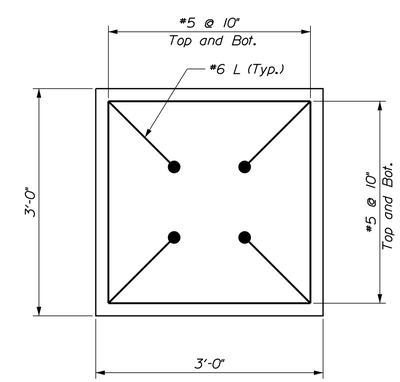

BUILDING FOUNDATION FOOTING REINFORCEMENT

STATE OF MAINE
DEPARTMENT OF TRANSPORTATION

02351500

WIN 023515.00

BRIDGE PLANS

BRIDGE NO. 5244

STATE OF MAINE KEITH S. WOOD No. 10423 LICENSED PROFESSIONAL ENGINEER

P.E. NUMBER 10423

SIGNATURE

10/1/2024

DATE

PROJ. MANAGER	DENVER SMALL	BY	DATE
DESIGN-DETAILED	K. WOOD	K. WOOD	4\2024
CHECKED-REVIEWED	A. FLOREN	M. KELLY	
DESIGN2-DETAILED2			
DESIGN3-DETAILED3			
REVISIONS 1			
REVISIONS 2			
REVISIONS 3			
REVISIONS 4			
FIELD CHANGES			

BABSON BRIDGE
KITTEREDGE BROOK
MOUNT DESERT HANCOCK COUNTY

FOUNDATION FOR RESET BUILDING

SHEET NUMBER

30

OF 32

Filename: ...\030_Pier_Building_Plan.dgn Division: BRIDGE Username: Date:10/1/2024

STRAIGHT BARS

MARK	QTY.	LENGTH	LOCATION	MARK	QTY.	LENGTH	LOCATION
			Abutment No. 1				
A500c	8	3'-6"	Sanitary Sewer Main Blockout				
A600c	6	56'-11"	Abutment Horizontal Near Face				
A601c	6	10'-6"	Wing Vertical				
A602c	2	10'-0"	Wing Vertical				
A603c	2	9'-5"	Wing Vertical				
A604c	2	8'-10"	Wing Vertical				
A605c	2	8'-3"	Wing Vertical				
A606c	2	7'-8"	Wing Vertical				
A607c	2	7'-1"	Wing Vertical				
A608c	3	6'-8"	Wing Vertical				
A609c	2	3'-1"	Wing Horizontal				
A610c	2	4'-9"	Wing Horizontal				
A611c	2	6'-6"	Wing Horizontal				
A612c	2	8'-2"	Wing Horizontal				
A613c	4	10'-4"	Wing Vertical				
A614c	2	9'-11"	Wing Vertical				
A615c	2	9'-5"	Wing Vertical				
A616c	2	8'-11"	Wing Vertical				
A617c	2	8'-4"	Wing Vertical				
A618c	2	7'-10"	Wing Vertical				
A619c	2	7'-4"	Wing Vertical				
A620c	3	6'-10"	Wing Vertical				
A621c	2	1'-11"	Wing Horizontal				
A622c	2	3'-8"	Wing Horizontal				
A623c	2	5'-4"	Wing Horizontal				
A624c	2	7'-1"	Wing Horizontal				
A625c	6	30'-8"	Abutment Horizontal Far Face				
A800c	6	56'-11"	Abutment Long. Top				
A801c	1	30'-8"	Abutment Long. Top				
A900c	4	56'-11"	Abutment Long. Bottom				
A901c	1	30'-8"	Abutment Long. Bottom				
A902c	12	20'-3"	Wingwall Long. Far Face				
A903c	12	15'-10"	Wingwall Long. Far Face				
			Abutment No. 2				
B600c	5	54'-7"	Abutment Horizontal Near Face				
B601c	6	9'-11"	Wing Vertical				
B602c	2	9'-6"	Wing Vertical				
B603c	2	9'-0"	Wing Vertical				
B604c	2	8'-5"	Wing Vertical				
B605c	2	7'-11"	Wing Vertical				
B606c	2	7'-4"	Wing Vertical				
B607c	3	6'-10"	Wing Vertical				
B608c	2	3'-9"	Wing Horizontal				
B609c	2	5'-5"	Wing Horizontal				
B610c	2	7'-1"	Wing Horizontal				
B611c	2	7'-3"	Wing Horizontal				
B612c	4	9'-9"	Wing Vertical				
B613c	2	9'-5"	Wing Vertical				
B614c	2	8'-10"	Wing Vertical				
B615c	2	8'-4"	Wing Vertical				
B616c	2	7'-10"	Wing Vertical				
B617c	2	7'-3"	Wing Vertical				
B618c	3	6'-10"	Wing Vertical				
B619c	2	3'-0"	Wing Horizontal				
B620c	2	4'-9"	Wing Horizontal				
B621c	2	6'-4"	Wing Horizontal				
B622c	5	30'-8"	Abutment Horizontal Far Face				
B800c	6	54'-7"	Abutment Long. Top				
B801c	1	30'-8"	Abutment Long. Top				
B900c	4	54'-7"	Abutment Long. Bottom				
B901c	1	30'-8"	Abutment Long. Bottom				
B902c	11	19'-1"	Wingwall Long. Far Face				
B903c	11	14'-10"	Wingwall Long. Far Face				
			Superstructure				
S500c	12	58'-9"	Sidewalk & Curb Longitudinal				
			Approach Slab				
AS501b	32	30'-8"	Transverse				
AS601b	124	15'-2"	Longitudinal				

BENT BARS

MARK	QTY.	LENGTH	TYPE	A	B	C	D	E	F	G	H	O	R	LOCATION
							Abutment No. 1							
A550b	32	4'-0"	L	2'-0"	2'-0"									Approach Slab Dowels
A551c	9	3'-8"	T	6"	2'-8"	5 1/2"								Abutment Cross Ties
A552c	21	4'-2"	T	6"	3'-2"	5 1/2"								Abutment Cross Ties
A553c	19	6'-8"	S	0"	2'-0"	2'-8"	2'-0"			0"				Abut Vert. Bot at Wingwalls
A554c	33	4'-4"	S	0"	10"	2'-8"	10"			0"				Wingwall Vert. Top/Abut. Horz. End
A650c	3	9'-7"	V				2'-0 1/2"	7'-6 1/2"			3'-10 1/4"			Wingwall Top
A651c	3	8'-2"	V				1'-1"	7'-1"			3'-6 1/2"			Wingwall Top
A652c	10	11'-2"	S	0"	4'-3"	2'-8"	4'-3"			0"				Abutment Vertical
A653c	10	15'-0"	S	0"	6'-2"	2'-8"	6'-2"			0"				Abutment Vertical
A654c	34	11'-8"	S	0"	4'-3"	3'-2"	4'-3"			0"				Abutment Vertical
A655c	34	15'-6"	S	0"	6'-2"	3'-2"	6'-2"			0"				Abutment Vertical
							Abutment No. 2							
B550b	32	4'-0"	L	2'-0"	2'-0"									Approach Slab Dowels
B551c	9	3'-8"	T	6"	2'-8"	5 1/2"								Abutment Cross Ties
B552c	21	4'-2"	T	6"	3'-2"	5 1/2"								Abutment Cross Ties
B553c	17	6'-8"	S	0"	2'-0"	2'-8"	2'-0"			0"				Abut Vert. Bot at Wingwalls
B554c	30	4'-4"	S	0"	10"	2'-8"	10"			0"				Wingwall Vert. Top/Abut. Horz. End
B555c	4	7'-0"	L	3'-6"	3'-6"									Sanitary Sewer Main Blockout
B650c	3	8'-2"	V				2'-0 1/2"	6'-1 1/2"			3'-1 1/2"			Wingwall Top
B651c	3	6'-2"	V				1'-1"	5'-1"			2'-11 1/4"			Wingwall Top
B652c	10	11'-2"	S	0"	4'-3"	2'-8"	4'-3"			0"				Abutment Vertical
B653c	10	14'-0"	S	0"	5'-8	2'-8"	5'-8"			0"				Abutment Vertical
B654c	34	11'-8"	S	0"	4'-3"	3'-2"	4'-3"			0"				Abutment Vertical
B655c	34	14'-6"	S	0"	5'-8	3'-2"	5'-8			0"				Abutment Vertical
							Superstructure							
S550c	84	5'-9 1/2"	SC	10"	1'-5"	1'-3 1/2"	1'-5"			10"		1'-4 1/2"		Curbs Transverse
S551c	60	10'-11 1/2"	SB	10"	1'-2 1/2"	6'-8"	1'-5"	10"						Sidewalk Transverse
S552c	24	5'-9"	S	10"	1'-5"	1'-3"	1'-5"			10"				Sidewalk Transverse

TYPE - BENDING DIAGRAMS

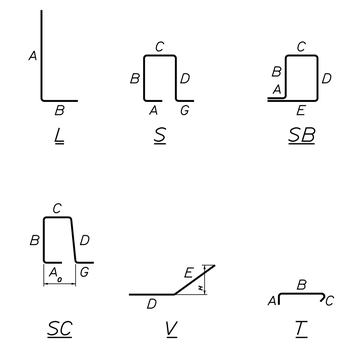

All dimensions are out-to-out of bar.

Bending details and hooks shall conform to the recommendations of the current revision of ACI Standard 315 and ACI Standard 318.

Plain Reinforcing Steel: ASTM A 615, Grade 60
Stainless Steel Reinforcing: ASTM A955, Grade 75
Glass Fiber Reinforced Polymer: ASTM D7957
Low-Carbon Chromium Steel: ASTM A1035, Type CS, Grade 100

GENERAL NOTES

1. The first digit(s) following the letter(s) of the mark indicate the size of the bar:

   Mark "A502" = bar size #5
   Mark "P805" = bar size #8
   Mark "S650" = bar size #6
   Mark "P1404" = bar size #14

2. The lower case letter following the bar number indicates the material of the bar.

   "A500b", b = (Black) Plain Steel
   "A550s", s = Stainless Steel
   "S500p", p = Glass Fiber Reinforced Polymer
   "P510c", c = Low-Carbon Chromium Steel

3. All reinforcement bars shall be Low-Carbon Chromium Steel except in the approach slabs. Approach slab reinforcement will be Plain Reinforcing Steel.

STATE OF MAINE
DEPARTMENT OF TRANSPORTATION

02351500

WIN 023515.00

BRIDGE PLANS

BRIDGE NO. 5244

STATE OF MAINE KEITH S. WOOD No. 10423 LICENSED PROFESSIONAL ENGINEER

Keith S. Wood 9/26/2024

P.E. NUMBER 10423
SIGNATURE
DATE 9/26/2024

PROJ. MANAGER	DENVER SMALL	BY	DATE
DESIGN-DETAILED	K. WOOD	K. WOOD	8\2024
CHECKED-REVIEWED	A. FLOREN	M. KELLY	------
DESIGN2-DETAILED2	------	------	------
DESIGN3-DETAILED3	------	------	------
REVISIONS 1	------	------	------
REVISIONS 2	------	------	------
REVISIONS 3	------	------	------
REVISIONS 4	------	------	------
FIELD CHANGES	------	------	------

BABSON BRIDGE
KITTEREDGE BROOK
MOUNT DESERT HANCOCK COUNTY

REINFORCING STEEL SCHEDULE

SHEET NUMBER
31
OF 32

Date:9/25/2024
Username:
Division: BRIDGE
Filename: ...\BRIDGE\MSTA\031_Rebar.dgn

PLAN LEGEND

Town, County, State	New R/W Along Existing R/W	Existing / Proposed: Sanitary Sewer, Telephone Line, Electric Line, Water Line, Underdrain Line, Gas Line, Guardrail, Culvert	Existing / Proposed: Traveled Way, Ditch, Catch Basin, Manhole, Sewer Manhole, Utility Pole, Fire Hydrant, Curbing
Approx. Property Lines — P.L.	Building / Clearing Limit Line		Cut / Fill Line
Existing Right of Way	Trees: Conifer / Deciduous		Stonewall / Retaining Wall
Limits of Wrought Portion — L.O.W.P.	Tree Line / Bush Line		Baseline 10+00 11+00 12+00
Control Of Access — C.O.A.	Water Edge		Monument / Traverse Point
New Right of Way	Ledge / Rock/Boulder / Flag Pole		Iron Rod Found ● IRF / Pipe Found ● IPF
New Easement	Fence: CHAIN LINK / BARB WIRE / STOCKADE		Replacement Pin Set
New Temporary Rights			
New R/W Within Existing R/W	Sign / Well / Mailbox		

THIS PLAN WAS PREPARED IN CONNECTION WITH THE DEPARTMENT'S ACQUISITION OF REAL PROPERTY FOR TRANSPORTATION PURPOSES. IT CANNOT BE USED TO ESTABLISH LEGAL BOUNDARIES BETWEEN ABUTTING PROPERTY OWNERS.

25 0 25 50 75 100
Scale of Feet

STATE OF MAINE
REGISTRY OF DEEDS

COUNTY _____
RECEIVED _____, _____
at _____h_____m_____M and
recorded in Plan Bk _____, Pg._____
Attest: _____
REGISTER

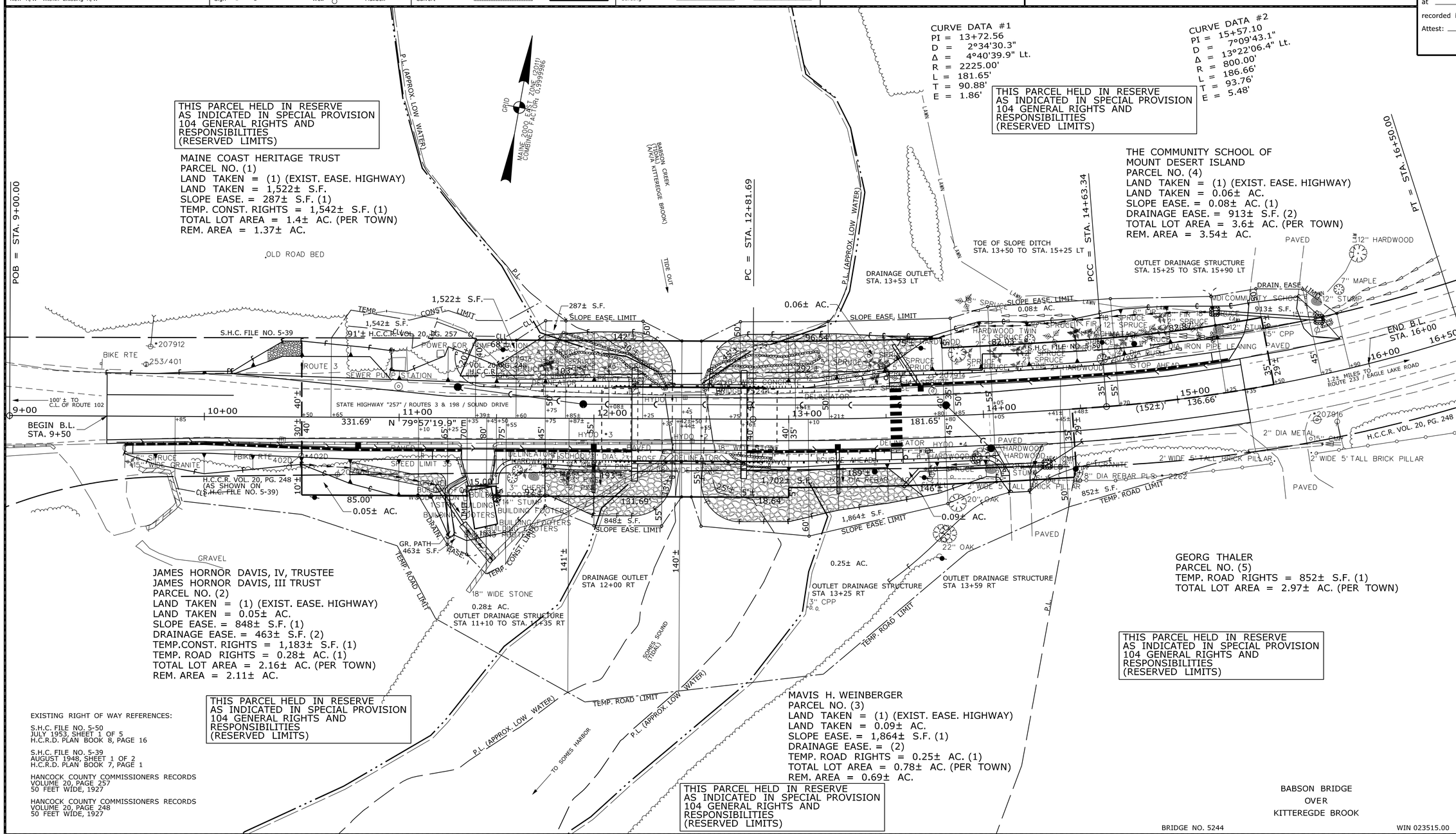

EXISTING RIGHT OF WAY REFERENCES:

S.H.C. FILE NO. 5-50
JULY 1953, SHEET 1 OF 5
H.C.R.D. PLAN BOOK 8, PAGE 16

S.H.C. FILE NO. 5-39
AUGUST 1948, SHEET 1 OF 2
H.C.R.D. PLAN BOOK 7, PAGE 1

HANCOCK COUNTY COMMISSIONERS RECORDS
VOLUME 20, PAGE 257
50 FEET WIDE, 1927

HANCOCK COUNTY COMMISSIONERS RECORDS
VOLUME 20, PAGE 248
50 FEET WIDE, 1927

ITEM	TECH	CHECKED
EXISTING CONDITION PLAN	C.D.P.	B.S.
FINAL RIGHT OF WAY	C.D.P.	D.G.
AREAS	C.D.P.	S.N.

STATE OF MAINE
DEPARTMENT OF TRANSPORTATION
16 STATE HOUSE STATION - AUGUSTA, ME 04333-0016 - 207-624-3460
MOUNT DESERT
RIGHT OF WAY MAP

REVISIONS			
NO.	DATE	DESCRIPTION	BY

PLAN FILED IN PLAN BOOK PAGE COUNTY RECORD					
NO.	GRANTOR	INSTRUMENT	DATE	BOOK	PAGE

BRUCE A. VAN NOTE
COMMISSIONER
JOYCE NOEL TAYLOR
CHIEF ENGINEER
DATE

STATE HIGHWAY "257"
ROUTES 3 & 198 / SOUND DRIVE
MOUNT DESERT HANCOCK COUNTY
FEDERAL AID PROJECT NO. 2351500

JUNE 2024	RIGHT-OF-WAY MAP	DOT FILE NO. 5-320
SCALE 1" = 25'	SHEET 1 OF 1	

SHEET NUMBER
32
OF 32

Date: $date$
Username: $user$
Division: $wkgroup$
Filename: $file$

GENERAL NOTES

1) SHEETS G–1, C–1, C–2, C–3, C–4, C–5, S–1, E–1, E–2, AND E–3 ENTITLED "MOUNT DESERT BABSON BRIDGE SEWER REPLACEMENT" DEFINE ONLY THE SCOPE AND REQUIREMENTS SPECIFIC TO THE RELOCATION AND REPLACEMENT OF THE TOWN OF MOUNT DESERT'S SANITARY SEWER SYSTEM RELATED TO THE REPLACEMENT OF THE PROPOSED BABSON BRIDGE OVER KITTEREDGE BROOK. SCOPE AND REQUIREMENTS FOR THE BRIDGE REPLACEMENT, DETOUR, ROAD RESTORATION, TEMPORARY BRIDGE, ETC. ARE DEFINED ELSEWHERE IN THE PLANS OR CONTRACT DOCUMENTS.

2) UTILITY LOCATIONS AS SHOWN ARE APPROXIMATE BASED ON AVAILABLE INFORMATION AT TIME OF SURVEY. CONTRACTOR SHALL BE RESPONSIBLE FOR FIELD LOCATION AND CONFIRMATION OF ALL EXISTING SEWER, WATER, STORM DRAIN, ELECTRICAL, TELEPHONE, AND CABLE UTILITIES. IT IS POSSIBLE THAT OTHER ACTIVE AND INACTIVE UTILITIES MAY EXIST IN THE PROJECT AREA. CONTRACTOR SHALL EXERCISE EXTREME CAUTION DURING EXCAVATION.

3) CONTRACTOR SHALL COORDINATE ALL CONSTRUCTION WITH THE TOWN TO FIELD LOCATE EXISTING SEWER FACILITIES AND TO MINIMIZE THEIR DISRUPTION. CONTINUOUS SEWER SERVICE MUST BE MAINTAINED BY THE CONTRACTOR AT ALL TIMES DURING CONSTRUCTION.

4) CONTRACTOR SHALL FIELD VERIFY LOCATION OF ANY UNDERGROUND PUBLIC OR PRIVATE ELECTRICAL AND TELEPHONE UTILITIES WITH DIG–SAFE PRIOR TO EXCAVATION.

5) CONTRACTOR SHALL FIELD VERIFY ALL EXISTING PIPE SIZES AND MATERIALS FOR CONNECTION OF TEMPORARY AND PERMANENT WORK PRIOR TO STARTING CONSTRUCTION AND ORDERING STRUCTURES.

6) PORTIONS OF SURVEY DATA AND RIGHT–OF–WAY INFORMATION ARE BASED ON PLANS TITLED "STATE OF MAINE DEPT. OF TRANSPORTATION, MOUNT DESERT HANCOCK COUNTY BABSON BRIDGE OVER KITTEREDGE BROOK, PROJECT NO. 2351500". NO LEGAL REPRESENTATION OF PROPERTY LINE AND RIGHT–OF–WAY INFORMATION IS INTENDED, NOR WAS ANY FORMAL BOUNDARY SURVEY CONDUCTED.

7) CONTRACTOR SHALL PROPERLY PROTECT AND AVOID DISTURBING PROPERTY PINS AND MONUMENTS. IF DISTURBED, THE PROPERTY PIN OR MONUMENT SHALL BE RESET AT CONTRACTOR'S EXPENSE BY A REGISTERED LAND SURVEYOR APPROVED BY THE ENGINEER.

8) CONTRACTOR SHALL CONTACT OWNERS OF UTILITY POLES ADJACENT TO EXCAVATION AREAS TO ARRANGE POLE SUPPORT AND/OR REMOVAL AND RESETTING DURING EXCAVATION AS REQUIRED.

9) CONTRACTOR IS RESPONSIBLE FOR THE LAYOUT OF ALL PROPOSED TEMPORARY AND PERMANENT WORK. ENGINEER WILL ASSIST ONLY IN PROVIDING REFERENCE POINTS AND ELEVATION DATA FOR INITIAL LAYOUT ONLY. CONTRACTOR SHALL MAINTAIN LAYOUT THROUGHOUT PROJECT.

10) CONTRACTOR SHALL CONTROL DUST GENERATED DURING THE PROJECT TO A LEVEL SATISFACTORY TO THE TOWN OF MOUNT DESERT, ENGINEER, AND MAINEDOT.

11) CONTRACTOR SHALL REPAIR ANY EXISTING UTILITIES DAMAGED DURING CONSTRUCTION.

12) CONTRACTOR SHALL LOAM AND SEED ALL DISTURBED VEGETATED AREAS WITH 4" LOAM, HYDROSEED, AND MULCH.

13) ALL AREAS DISTURBED BY CONTRACTOR'S OPERATIONS SHALL BE RESTORED TO THEIR ORIGINAL CONDITION UNLESS OTHERWISE NOTED. COST OF RESTORATION IS INCIDENTAL TO CONTRACT OUTSIDE OF PAY LIMITS.

14) CONTRACTOR SHALL PROVIDE REDUNDANT TEMPORARY PUMPING AND/OR GRAVITY SEWER AS NEEDED TO BYPASS SEWAGE FLOWS AROUND WORK AREAS AND MAINTAIN SEWER SERVICE ALONG ROUTE OF NEW WORK. CONTRACTOR IS RESPONSIBLE TO MONITOR AND MAINTAIN TEMPORARY SEWER TO PROVIDE CONTINUOUS SEWER SERVICE.

15) THE HYDRAULIC CAPACITY OF THE PUMP STATION MUST BE MAINTAINED UNTIL PUMP STATION MODIFICATIONS ARE COMPLETE. PROVIDE TEMPORARY PUMPING AS REQUIRED TO MATCH EXISTING PUMP STATION CAPACITY. EXISTING PUMP CAPACITY IS 208 GPM @ 72.5' TDH. TEMPORARY PUMPS USED FOR TEMPORARY BY–PASS PUMPING FOR UNATTENDED PERIODS SHALL BE MONITORED BY AN ALARM SYSTEM. CONTRACTOR SHALL SUBMIT A TEMPORARY BY–PASS PLAN FOR THE PUMP STATION.

16) ALL PROJECT AREA SEWER LINES AND PUMP STATION WET WELL SHALL BE PROPERLY FLUSHED BY CONTRACTOR AT COMPLETION OF PROJECT AND WHENEVER CONSTRUCTION DEBRIS ENTERS OPEN PIPE WORK OR WET WELL. CONTRACTOR SHALL TAKE ALL NECESSARY MEASURES TO PREVENT CONSTRUCTION MATERIALS AND DEBRIS FROM ENTERING OPEN PIPE LINES AND WET WELL AND SHALL BE RESPONSIBLE FOR THE COST OF ANY REPAIRS FROM DAMAGE THAT RESULTS FROM SUCH DEBRIS. LINES AND WET WELL SHALL BE FLUSHED WITH HIGH PRESSURE JETTING EQUIPMENT AND CLEANED WITH VACUUM TRUCK. GRAVITY FLUSHING IS NOT ACCEPTABLE.

17) MANHOLE RIM ELEVATIONS ARE PROVIDED ON PLAN SHEETS TO ESTABLISH GENERAL HEIGHT OF NEW STRUCTURES FOR BIDDING PURPOSES. EXACT FINAL RIM ELEVATIONS SHALL BE ESTABLISHED IN FIELD SUCH THAT TOP OF RIM IS 3/8" BELOW FINAL PAVEMENT GRADE OR AS SHOWN FOR OTHER AREAS ON PLAN AND PROFILE SHEETS. CONTRACTOR SHALL FIELD VERIFY FINAL ELEVATION WITH FIELD ENGINEER PRIOR TO COMPLETION OF MASONRY WORK.

18) ALL PERMANENT SEWER LINES WITH LESS THAN FIVE FEET OF COVER SHALL BE INSULATED WITH TWO INCHES OF RIGID INSULATION AT FULL TRENCH WIDTH. IF LESS THAN FOUR FEET OF COVER IS AVAILABLE, PROVIDE DOUBLE LAYER OF TWO INCH INSULATION.

19) ALL DISTURBED ASBESTOS CEMENT (AC) PIPING SHALL BE REMOVED FROM TRENCH AND SEGREGATED FROM GENERAL CONSTRUCTION FILL. DISPOSAL OF ALL AC PIPING IS REGULATED UNDER THE MAINE DEP CHAPTER 401 RULES. DISPOSAL OF ALL OTHER MATERIAL SHALL COMPLY WITH DEP DISPOSAL REQUIREMENTS.

20) CONTRACTOR SHALL HAVE THE SOLE RESPONSIBILITY TO ENSURE THAT ALL WORK MEETS ALL OSHA AND OTHER APPLICABLE CODE, HEALTH, AND SAFETY REQUIREMENTS.

21) CONTRACTOR SHALL EXERCISE APPROPRIATE EROSION AND SEDIMENT CONTROL MEASURES DURING CONSTRUCTION IN ACCORDANCE WITH ACCEPTED PRACTICE, APPLICABLE LAWS AND REGULATIONS AND REQUIREMENTS OF THESE CONTRACT DOCUMENTS.

22) CONTRACTOR SHALL MAINTAIN ACCESS THROUGHOUT PROJECT AS REQUIRED TO EXISTING MUNICIPAL WASTEWATER PUMP STATION FOR PERSONNEL AND EQUIPMENT. COORDINATE ACCESS REQUIREMENTS WITH TOWN OF MOUNT DESERT AND ENGINEER.

23) DESIGN INTENT IS TO COORDINATE TEMPORARY GRAVITY SEWER SYSTEM WITHIN ROADWAY DETOUR AND TEMPORARY BRIDGE CROSSING STRUCTURE.

24) TEMPORARY BRIDGE SEWER SYSTEM AS PROPOSED BY CONTRACTOR SHALL BE REVIEWED ONCE SUBMITTED AND ENGINEER WILL ADJUST PROPOSED SEWER DESIGN TO ACTUAL PROPOSED SYSTEM IF NECESSARY.

25) INSULATED AND HEAT–TRACED SEWER MAIN IS REQUIRED ON BOTH TEMPORARY AND PERMANENT EXPOSED SEWER LINES AS SHOWN ON SHEETS C–2, C–3, AND DETAIL SHEET C–5.

LEGEND*

Symbol	Description
MH	EXISTING SEWER MANHOLE
D	EXISTING DRAIN MANHOLE
	PROPOSED SEWER/DRAIN MANHOLE
—S—	EXISTING SEWER LINE
—s—	EXISTING SEWER SERVICE
—S—	PROPOSED SEWER LINE
—s—	PROPOSED SEWER SERVICE
—CS—	EXISTING COMBINED SEWER
—FM—	EXISTING FORCE MAIN
—FM—	PROPOSED FORCE MAIN
—W—	EXISTING WATER LINE
—w—	EXISTING WATER SERVICE
—W—	PROPOSED WATER LINE
—w—	PROPOSED WATER SERVICE
—D—	EXISTING STORM DRAIN
—D—	PROPOSED STORM DRAIN
—D—	PROPOSED STORM DRAIN SERVICE
—UD—	EXISTING UNDERDRAIN
—UD—	PROPOSED UNDERDRAIN
	EXISTING CULVERT
	PROPOSED CULVERT
	EXISTING WATER WEDGE VALVE
	EXISTING WATER CURB STOP
	PROPOSED WATER WEDGE VALVE
	PROPOSED CURB STOP
	EXISTING HYDRANT
	PROPOSED HYDRANT
W	PROPOSED WELL
	EXISTING CATCH BASINS
	PROPOSED CATCH BASIN
E—	CAPPED LINE
—A—	AIR LINE
—V—	VENT LINE
---C---	GRADING CUT LINE
---F---	GRADING FILL LINE
---M---	GRADING MATCH LINE
T	TELEPHONE MANHOLE/THERMOSTAT
C	CABLE TV MANHOLE
E	ELECTRICAL MANHOLE
—G—	GAS LINE
----T---	BURIED TELEPHONE CABLE
----C---	BURIED TV CABLE
----E---	BURIED ELECTRIC CABLE
---E(OH)--	OVERHEAD ELECTRIC CABLE
---T(OH)--	OVERHEAD TELEPHONE CABLE
	UTILITY POLE
	UTILITY POLE ANCHOR
	UTILITY PEDESTAL
	BURIED CABLE JUNCTION BOX
E	TRANSFORMER ON CONC. PAD
	STREET LIGHT
	YARD LIGHT
	PEDESTRIAN SIGNAL LIGHT
	DECORATIVE STREET LIGHT
	TRAFFIC SIGNAL POLE
R⊗R	RAILROAD CROSSING SIGN/SIGNAL
	SATELLITE DISH
	SIDEWALK RAMP
	RIP–RAP
	RUBBLE STONE WALL
	CONCRETE, BLOCK OR GRANITE WALL
	DITCH, SWALE, STREAM, RIVER
-----99------	EXISTING CONTOUR
—99—	PROPOSED CONTOUR
×99.0	EXISTING SPOT ELEVATION
×99.0	PROPOSED SPOT ELEVATION
	SOFTWOOD TREE
	HARDWOOD TREE
	TREE CLUSTER
	BUSH
	BRUSH LINE
	TREE LINE
GRAN	EXISTING CURB (TYPE)
	PROPOSED CURB
	SURVEY CONTROL POINT
	PROPERTY IRON PIN
	RIGHT–OF–WAY MONUMENT
	RIGHT–OF–WAY LINE
	LOT LINE
	EASEMENT
M	MAILBOX
	PROPANE TANK
	EXISTING SIGNS
	PROPOSED SIGN
	EXISTING BOLLARD/POST
	PROPOSED BOLLARD
	FLAGPOLE
—x—	FENCE
	GUARD RAIL
	HANDICAPPED SYMBOL
	LEDGE OUTCROP
	LEDGE ENCOUNTERED
NR	NO REFUSAL
	TEST PIT REQUIRED
MW–XXX	MONITORING WELL
TW–XXX	TEST WELL
P–XXX B–XXX	BORING, OR PROBE
	WETLANDS AREA
MH	SEPTIC TANK
HINGE SIDE	ACCESS HATCH

*THESE ARE GENERAL SYMBOLS. NOT ALL APPEAR ON THESE DRAWINGS.

ABBREVIATIONS *

Abbreviation	Meaning
AB	ANCHOR BOLTS
AC	ASBESTOS CEMENT
AFF	ABOVE FINISHED FLOOR
AGGR	AGGREGATE
ALT	ALTERNATE
ALUM	ALUMINUM
ANSI	AMERICAN NATIONAL STANDARDS INSTITUTE
APA	AMERICAN PLYWOOD ASSOCIATION
APPROX;±	APPROXIMATELY
AVG	AVERAGE
ARV	AIR RELIEF VALVE
BITUM	BITUMINOUS
BL;℄	BASELINE
BLDG	BUILDING
BOF	BOTTOM OF FOOTING
BOT	BOTTOM
BV	BACK VENT
C	CHANNEL
℄	CENTERLINE
CB	CATCH BASIN
CFM	CUBIC FEET PER MINUTE
CI	CAST IRON
CJ	CONTROL JOINT
CL	CLEARING LIMITS OR CENTERLINE
CLG	CEILING
CLR	CLEAR
CL_2	CHLORINATION
CMP	CENTRAL MAINE POWER
CMP	CORRUGATED METAL PIPE
CMU	CONCRETE MASONRY UNIT
CO	CLEANOUT
COL	COLUMN
CONC.	CONCRETE
CONN	CONNECTION
CONST	CONSTRUCTION
CONT	CONTINUOUS
CPE	CORRUGATED POLYETHYLENE PIPE
CS	CARBON STEEL/COMBINED SEWER
CTS	COPPER TUBE SIZE
CU	COPPER
CULV	CULVERT
D	DRAIN OR DIAMETER
DBC	DIRECT BURIAL CABLE
DEP	DEPT OF ENVIRONMENTAL PROTECTION
DI	DUCTILE IRON
DIA;ø	DIAMETER
DIAG	DIAGONAL
DIM	DIMENSIONS
DIN	GERMAN INSTITUTE FOR STANDARDIZATION
DCW	DOMESTIC COLD WATER
DHW	DOMESTIC HOT WATER
DN	DOWN
DR	DRIVEWAY
DRN	DRAIN
DW	DOMESTIC WATER OR DRIVEWAY
DWV	DRAIN, WASTE, AND VENT
E	MODULUS OF ELASTICITY OR ELECTRIC
EA	EACH
EB	EMERGENCY BYPASS
EE	EACH END
EF	EACH FACE
EHW	EXTREME HIGH WATER
EJ	EXPANSION JOINT
EL;ELEV	ELEVATION
ELEC COND	ELECTRICAL CONDUIT
ELW	EXTREME LOW WATER
EMEC	EASTERN MAINE ELECTRICAL CO–OP INC.
EMH	ELECTRIC MANHOLE
EMM	EMERA MAINE
EQUIP	EQUIPMENT
EST	ESTIMATED
EW	EACH WAY
EXIST, EX	EXISTING
EXP	EXPANSION
EXT	EXTERIOR
EXTEN	EXTENSION
Fb	BENDING STRESS
Fc	COMPRESSIVE STRESS
Ft	TENSILE STRESS
FC	FIRE CODE
FCO	FLOOR CLEANOUT
FCS	FLOW CONTROL STRUCTURE
FD	FLOOR DRAIN
FDN	FOUNDATION
FE	FIRE EXTINGUISHER
FF;FIN FLR	FINISH FLOOR
FIN	FINISHED
FIN GR	FINISH GRADE
FLG	FLANGED
FLR	FLOOR
FLR'G	FLOORING
FM	FORCE MAIN
FOS	FACE OF STUD
FPT	FAIRPOINT COMMUNICATION
FR	FIRE RESISTANT
FRP	FIBERGLASS REINFORCED PLASTIC
FT	FEET
G	GAS LINE
GA	GAUGE
GAL	GALLON
GALV	GALVANIZED
GDN	GARDEN
GHT	GARDEN HOSE THREAD
GL	GLASS LINED
GPD	GALLONS PER DAY
GPH	GALLONS PER HOUR
GPM	GALLONS PER MINUTE
GRAN	GRANITE
GRAV	GRAVEL
GRD	GROUND
GS	GALVANIZED STEEL
GWB	GYPSUM WALLBOARD
H	HEIGHT
HB	HOSE BIBB
HC	HOSE CLEANOUT
HDW	HARDWARE
HM	HOLLOW METAL
HORIZ	HORIZONTAL
H P	HIGH POINT
HP	HORSEPOWER
HPC	BEGIN HORIZONTAL CURVE
HPI	HORIZONTAL CURVE TANGENT INTERSECTION
HPT	END HORIZONTAL CURVE
HT	HEIGHT
HYD	HYDRANT
HZ	HERTZ
ID	INSIDE DIAMETER
IJ	ISOLATION JOINT
IN	INCHES
INF	INFLUENT
INSUL	INSULATION
INT	INTERIOR
INV	INVERT
I\O	INPUT/OUTPUT
IP	IRON PIPE
JS	JANITOR SINK
JB	JUNCTION BOX
KD	KILN DRIED
LAT	LATERAL
LAV	LAVATORY
LE	LEVEL ELEMENT
LF	LINEAR FEET
LG	LONG OR LARGE
L	LEFT OR LENGTH
LKR	LOCKERS
LLH	LONG LEG HORIZONTAL
LLV	LONG LEG VERTICAL
LOC	LOCATION
LP	LOW POINT OR LIQUID PROPANE
LR	LONG RADIUS
LT	LEFT
MANUF	MANUFACTURER
MAT'L	MATERIAL
MB	MACHINE BOLTS
MAX	MAXIMUM
MC	MOISTURE CONTENT
MCC	MOTOR CONTROL CENTER
MECH	MECHANICAL
MFG	MANUFACTURER
MH	MANHOLE
MHW	MEAN HIGH WATER
MIL	1/1000 INCH
MIN	MINIMUM
MJ	MECHANICAL JOINT
MLSS	MIXED LIQUOR SUSPENDED SOLIDS
MLW	MEAN LOW WATER
MM	MILLIMETER
MO	MASONRY OPENING
MON	MONUMENT
MPS	MAINE PUBLIC SERVICE
MRL	MEAN RIVER LEVEL
MS	MOISTURE SENSOR
MSL	MEAN SEA LEVEL
MTL	METAL
MW	MONITORING WELL
N/F	NOW/FORMERLY
NO	NUMBER
NMFS	NATIONAL MARINE FISHERIES SERVICE
NPS	NATIONAL PARK SERVICE
NPT	NATIONAL PIPE THREAD
NR	NO REFUSAL
NRPA	NATURAL RESOURCES PROTECTION ACT
NS	NEAR SIDE
NTS	NOT TO SCALE
OC	ON CENTER
OD	OUTSIDE DIAMETER
OH	OVERHEAD
OPER	OPERATOR
OR	ORANGEBURG PIPE
PE	POLYETHYLENE OR PLAIN END
PEN	PENETRATION
PERF	PERFORATED
PEX	CROSS–LINKED POLYETHYLENE
PD	PURGE DIFFUSER
PI	PROPERTY IRON
PL	PLATE OR PROPERTY LINE
PLYWD	PLYWOOD
POLY	POLYETHYLENE PLASTIC
POTW	PUBLICLY OWNED TREATMENT WORKS
PROP	PROPOSED
PSF	POUNDS PER SQUARE FOOT
PSI	POUNDS PER SQUARE INCH
PT	PRESSURE TREATED
PTD	PAINTED
PVC	POLYVINYL CHLORIDE
Q_{PK}	PEAK FLOW
R	RADIUS OR RIGHT
RAD	RADIUS
RAN	RANGE
RAS	RETURN ACTIVATED SLUDGE
RCEP	REINFORCED CONCRETE ELLIPTICAL PIPE
RCP	REINFORCED CONCRETE PIPE
REINF	REINFORCED OR REINFORCING BAR
RED	REDUCING
REF	REFRIGERATOR
REQ	REQUIRED
RESIL	RESILIENT
RET. WALL	RETAINING WALL
RGS	RIGID GALVANIZED STEEL
R.O.	ROUGH OPENING
RPM	REVOLUTIONS/MINUTE
RT	RIGHT
R/W	RIGHT OF WAY
S	SLOPE OR SEWER
SAN	SANITARY
SDR	STANDARD DIMENSION RATIOS
SCH	SCHEDULE
SCP	SURVEY CONTROL POINT
SCR	SCREENINGS
SECT	SECTION
SF	SQUARE FEET
SERV	SERVICE
SHT	SHEET
SHD	ROAD SHOULDER
SI	SPRAY IRRIGATION
SICPE	SMOOTH INTERIOR CORRUGATED POLYETHYLENE
SLG	SLUICE GATE
SPEC	SPECIAL
SPEC'S	SPECIFICATIONS
SP	SUMP PUMP
SQ	SQUARE
SR	SHORT RADIUS
SWR	SHOWER
SS	STAINLESS STEEL
STA	STATION
STD	STANDARD
STL	STEEL
SUSP	SUSPENDED
SW	SIDEWALK OR SEAWATER
T	TELEPHONE OR THICKNESS
T & B	TOP AND BOTTOM
T & G	TONGUE AND GROOVE
TBM	TEMPORARY BENCH MARK
TDH	TOTAL DYNAMIC HEAD
TEFC	FULLY ENCLOSED MOTOR
THR'HOLD	THRESHOLD
TOP	TOP OF PLATE
TR	TRUSS PIPE
TYP	TYPICAL
UG	UNDERGROUND
URN	URINAL
USDA	UNITED STATES DEPARTMENT OF AGRICULTURE
UST	UNDERGROUND STORAGE TANK
V	VENT
VAR	VARIES
VB	VAPOR BARRIER OR VACUUM BREAKER
VC	VITRIFIED CLAY
VER	VERIZON TELEPHONE
VERT.	VERTICAL
VFD	VARIABLE FREQUENCY DRIVE
VPC	BEGIN VERTICAL CURVE
VPI	VERTICAL CURVE TANGENT INTERSECTION
VPT	END VERTICAL CURVE
VTR	VENT THROUGH ROOF
W	WATER OR WIDTH
W/	WITH
WAS	WASTE ACTIVATED SLUDGE
WC	WATER CLOSET
WCO	WALL CLEANOUT
WD	WOOD
WF	WIDE FLANGE
WH	WATER HEATER
WLD	WELDED
WR	WATER RESISTANT
WS	WATER SURFACE
W'STRIPPING	WEATHER STRIPPING
WW	WET WELL
WWF	WELDED WIRE FABRIC
WWM	WELDED WIRE MESH

*THESE ARE GENERAL ABBREVIATIONS. NOT ALL APPEAR ON THESE DRAWINGS.

INDEX

GENERAL

G–1 GENERAL NOTES AND INDEX

CIVIL

C–1 EXISTING SEWER PLAN & PROFILE
C–2 TEMPORARY SEWER PLAN & PROFILE
C–3 PERMANENT SEWER PLAN & PROFILE
C–4 CIVIL DETAILS
C–5 CIVIL DETAILS

STRUCTURAL

S–1 SEWER LINE SUPPORT DETAILS

ELECTRICAL

E–1 ELECTRICAL SITE PLAN, POWER RISER & SCHEDULES
E–2 ELECTRICAL P.S. SECTION & HEAT TRACE DETAILS
E–3 PUMP STATION SERVICE CABINET DETAILS & TELEMETRY RISER

PROJECT NO.: 023515.00

OLVER ASSOCIATES INC.
ENVIRONMENTAL ENGINEERS
290 MAIN STREET WINTERPORT, MAINE

STATE OF MAINE ★ LICENSED PROFESSIONAL ENGINEER ★ WILLIAM M. OLVER No. 5246

DATE	ADDITION OR REVISION

DES.BY: NWD DR.BY: NWD CK.BY: WMO
SCALE: NONE OA PROJECT NO.: 2193
DATE: AUGUST, 2024 SHEET: G–1

TOWN OF MOUNT DESERT, MAINE
MOUNT DESERT BABSON BRIDGE SEWER REPLACEMENT

GENERAL NOTES AND INDEX

SHEET NUMBER

G-1

X:\oassoc\Projects\MDI\2193 Babsons Bridge Sewer Crossing\MDOT SUBMISSION–FINAL\2193 G–01.dwg, 10/8/2024 1:32:21 PM, 1:1

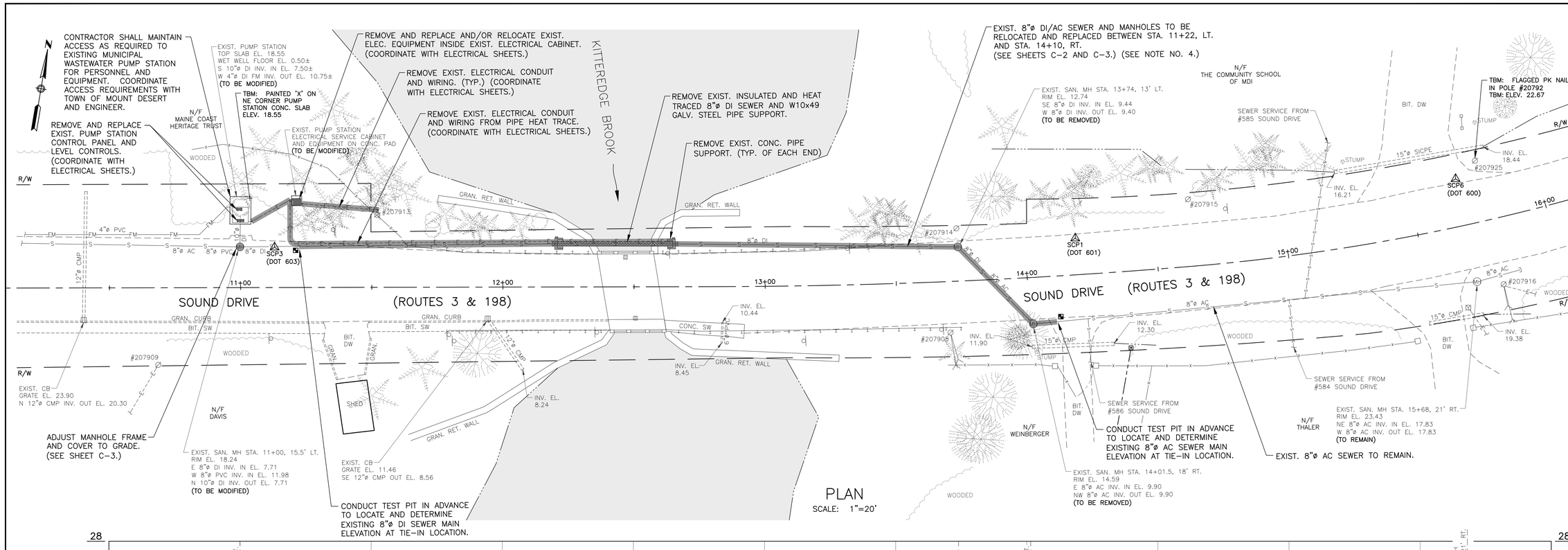

PLAN
SCALE: 1"=20'

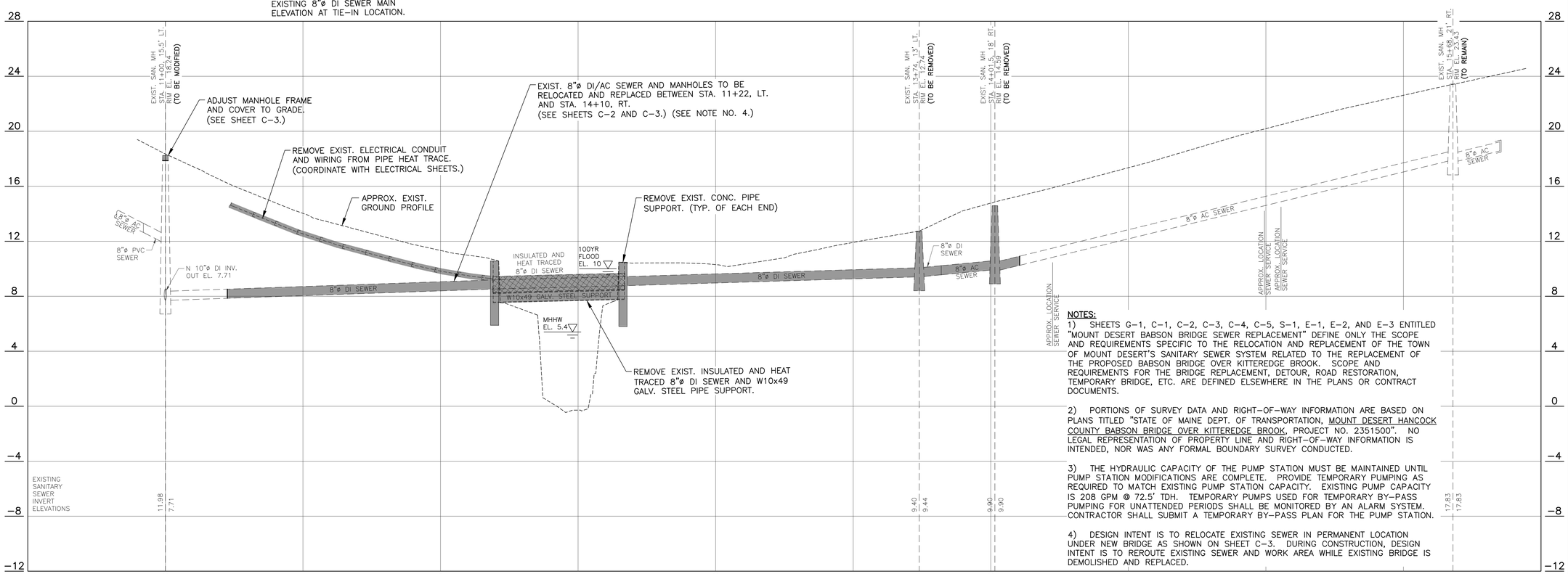

PROFILE
SCALE: 1"=20' HORIZ.
1"=4' VERT.

NOTES:

1) SHEETS G-1, C-1, C-2, C-3, C-4, C-5, S-1, E-1, E-2, AND E-3 ENTITLED "MOUNT DESERT BABSON BRIDGE SEWER REPLACEMENT" DEFINE ONLY THE SCOPE AND REQUIREMENTS SPECIFIC TO THE RELOCATION AND REPLACEMENT OF THE TOWN OF MOUNT DESERT'S SANITARY SEWER SYSTEM RELATED TO THE REPLACEMENT OF THE PROPOSED BABSON BRIDGE OVER KITTEREDGE BROOK. SCOPE AND REQUIREMENTS FOR THE BRIDGE REPLACEMENT, DETOUR, ROAD RESTORATION, TEMPORARY BRIDGE, ETC. ARE DEFINED ELSEWHERE IN THE PLANS OR CONTRACT DOCUMENTS.

2) PORTIONS OF SURVEY DATA AND RIGHT-OF-WAY INFORMATION ARE BASED ON PLANS TITLED "STATE OF MAINE DEPT. OF TRANSPORTATION, MOUNT DESERT HANCOCK COUNTY BABSON BRIDGE OVER KITTEREDGE BROOK, PROJECT NO. 2351500". NO LEGAL REPRESENTATION OF PROPERTY LINE AND RIGHT-OF-WAY INFORMATION IS INTENDED, NOR WAS ANY FORMAL BOUNDARY SURVEY CONDUCTED.

3) THE HYDRAULIC CAPACITY OF THE PUMP STATION MUST BE MAINTAINED UNTIL PUMP STATION MODIFICATIONS ARE COMPLETE. PROVIDE TEMPORARY PUMPING AS REQUIRED TO MATCH EXISTING PUMP STATION CAPACITY. EXISTING PUMP CAPACITY IS 208 GPM @ 72.5' TDH. TEMPORARY PUMPS USED FOR TEMPORARY BY-PASS PUMPING FOR UNATTENDED PERIODS SHALL BE MONITORED BY AN ALARM SYSTEM. CONTRACTOR SHALL SUBMIT A TEMPORARY BY-PASS PLAN FOR THE PUMP STATION.

4) DESIGN INTENT IS TO RELOCATE EXISTING SEWER IN PERMANENT LOCATION UNDER NEW BRIDGE AS SHOWN ON SHEET C-3. DURING CONSTRUCTION, DESIGN INTENT IS TO REROUTE EXISTING SEWER AND WORK AREA WHILE EXISTING BRIDGE IS DEMOLISHED AND REPLACED.

PROJECT NO.: 023515.00

OLVER ASSOCIATES INC.
ENVIRONMENTAL ENGINEERS
290 MAIN STREET WINTERPORT, MAINE

STATE OF MAINE WILLIAM J. OLVER JR. 5246 PROFESSIONAL ENGINEER

DATE	ADDITION OR REVISION

DES.BY: NWD	DR.BY: NWD	CK.BY: WMO	
SCALE: AS NOTED	OA PROJECT NO.: 2193		
DATE: AUGUST, 2024	SHEET: C-1		

TOWN OF MOUNT DESERT, MAINE
MOUNT DESERT BABSON BRIDGE
SEWER REPLACEMENT

EXISTING SEWER PLAN & PROFILE

SHEET NUMBER

C-1

X:\jobsoc\Projects\MDI\2193 Babsons Bridge Sewer Crossing\MDOT SUBMISSION-FINAL\2193 EXIST SEWER.dwg, 10/8/2024 1:32:21 PM, 1:1

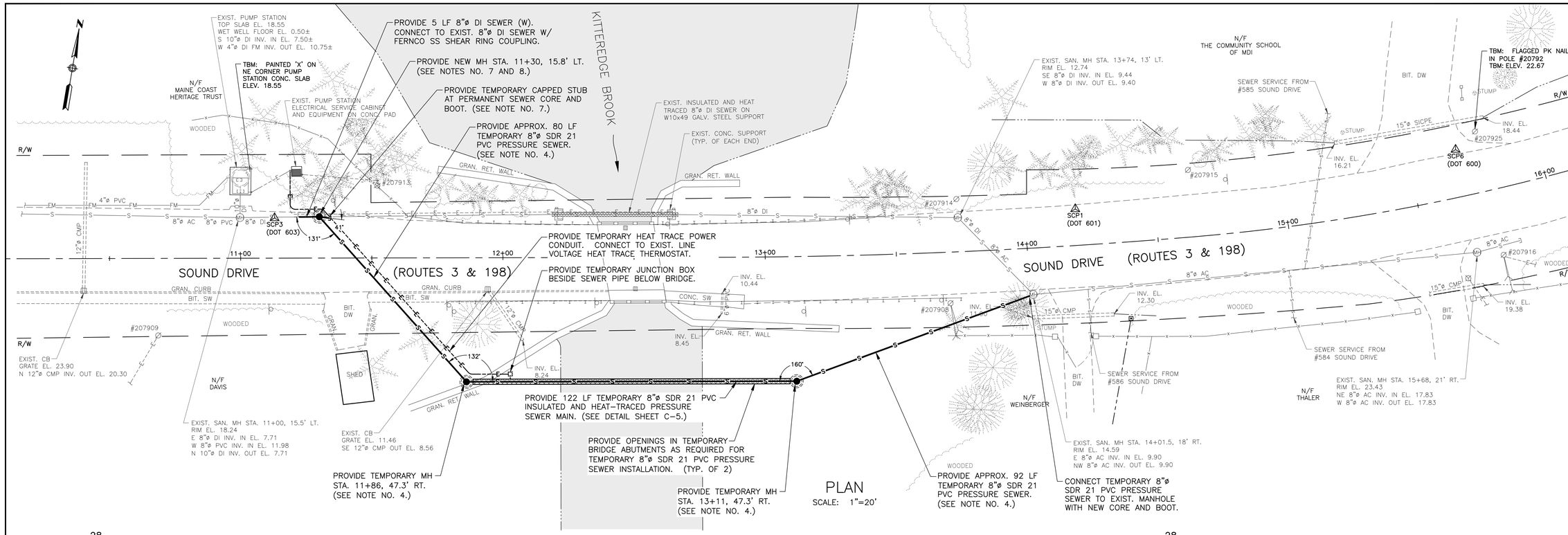

PLAN
SCALE: 1"=20'

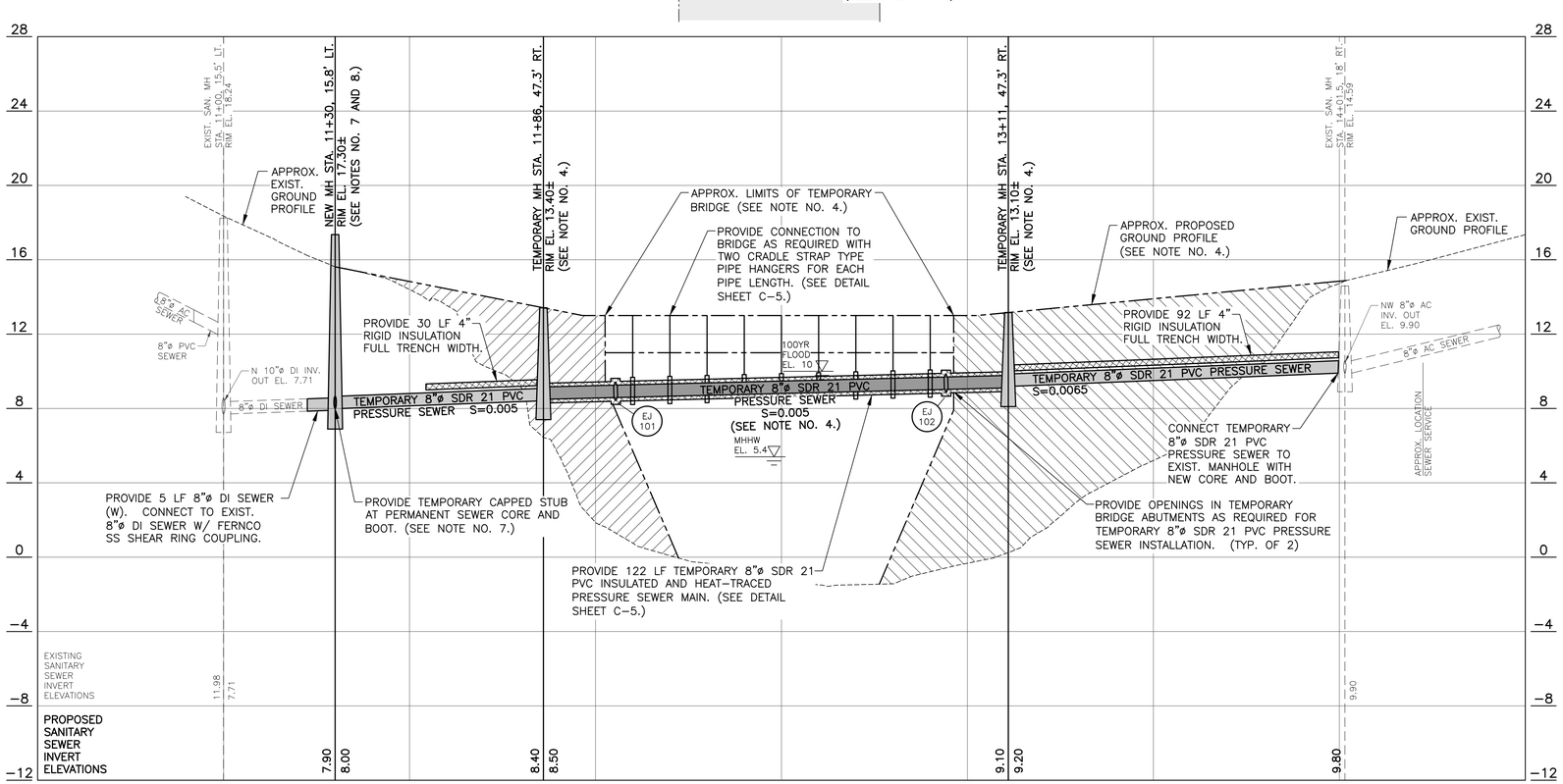

PROFILE
SCALE: 1"=20' HORIZ.
1"=4' VERT.

NOTES:

1) SHEETS G-1, C-1, C-2, C-3, C-4, C-5, S-1, E-1, E-2, AND E-3 ENTITLED "MOUNT DESERT BABSON BRIDGE SEWER REPLACEMENT" DEFINE ONLY THE SCOPE AND REQUIREMENTS SPECIFIC TO THE RELOCATION AND REPLACEMENT OF THE TOWN OF MOUNT DESERT'S SANITARY SEWER SYSTEM RELATED TO THE REPLACEMENT OF THE PROPOSED BABSON BRIDGE OVER KITTEREDGE BROOK. SCOPE AND REQUIREMENTS FOR THE BRIDGE REPLACEMENT, DETOUR, ROAD RESTORATION, TEMPORARY BRIDGE, ETC. ARE DEFINED ELSEWHERE IN THE PLANS OR CONTRACT DOCUMENTS.

2) PORTIONS OF SURVEY DATA AND RIGHT-OF-WAY INFORMATION ARE BASED ON PLANS TITLED "STATE OF MAINE DEPT. OF TRANSPORTATION, MOUNT DESERT HANCOCK COUNTY BABSON BRIDGE OVER KITTEREDGE BROOK, PROJECT NO. 2351500". NO LEGAL REPRESENTATION OF PROPERTY LINE AND RIGHT-OF-WAY INFORMATION IS INTENDED, NOR WAS ANY FORMAL BOUNDARY SURVEY CONDUCTED.

3) DESIGN INTENT IS TO PROVIDE SDR 21 PVC PRESSURE SEWER PIPE FOR GRAVITY SEWER APPLICATION AT TEMPORARY BRIDGE CROSSING.

4) TEMPORARY BRIDGE AND ROAD LOCATION, TEMPORARY BRIDGE LIMITS, AND PROPOSED GROUND PROFILE ARE APPROXIMATE AND CONCEPTUAL. INTENT IS TO SUSPEND 8"ø SDR 21 PVC PRESSURE SEWER PIPE FROM PROPOSED TEMPORARY BRIDGE AND PROVIDE OPENINGS IN TEMPORARY RETAINING WALL BRIDGE ABUTMENTS AS REQUIRED FOR TEMPORARY 8"ø SDR 21 PVC PRESSURE SEWER WITH A MINIMUM SLOPE OF S=0.005.

5) CONTRACTOR IS RESPONSIBLE TO MONITOR AND MAINTAIN TEMPORARY SEWER FOR CONTINUED SEWER SERVICE.

6) TEMPORARY BRIDGE SYSTEM PROPOSED BY CONTRACTOR TO BE REVIEWED ONCE SUBMITTED AND ENGINEER WILL ADJUST PROPOSED DESIGN TO ACTUAL PROPOSED SYSTEM IF NECESSARY.

7) PROVIDE ADDITIONAL CORE AND BOOT IN NEW MH STA. 11+30, 15.8' RT. AS REQUIRED FOR TEMPORARY SEWER. DESIGN INTENT IS TO USE MANHOLE FOR BOTH TEMPORARY AND PERMANENT SEWERS. CONTRACTOR SHALL REMOVE TEMPORARY SEWER AND CAP AT MANHOLE UPON COMPLETION OF PERMANENT SEWER INSTALLATION. (SEE DETAIL SHEET C-4.)

8) RIM ELEVATION OF NEW MH STA. 11+30, 15.8' RT. IS BASED ON PROPOSED FINISH ROAD GRADE.

PROJECT NO.: 023515.00

OLVER ASSOCIATES INC.
ENVIRONMENTAL ENGINEERS
290 MAIN STREET WINTERPORT, MAINE

STATE OF MAINE WILLIAM OLVER No. 5246 PROFESSIONAL ENGINEER

DATE	ADDITION OR REVISION	DR.BY: NWD	CK.BY: WMO
		DES.BY: NWD	OA PROJECT NO.: 2193
		SCALE: AS NOTED	SHEET: C-2
		DATE: AUGUST, 2024	

TOWN OF MOUNT DESERT, MAINE
MOUNT DESERT BABSON BRIDGE
SEWER REPLACEMENT

TEMPORARY SEWER PLAN & PROFILE

SHEET NUMBER

C-2

X:\jonsse\Projects\MDI\2193 Babsons Bridge Sewer Crossing\MDOT SUBMISSION-FINAL\2193 TEMP SEWER.dwg, 10/8/2024 1:32:21 PM, 1:1

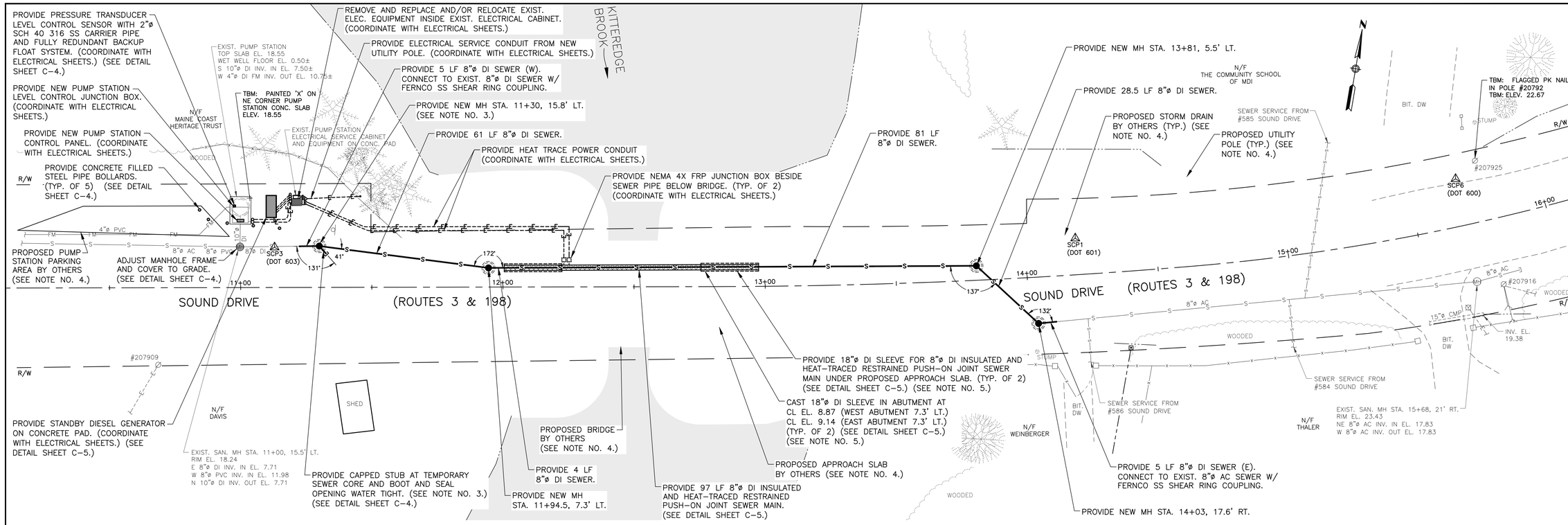

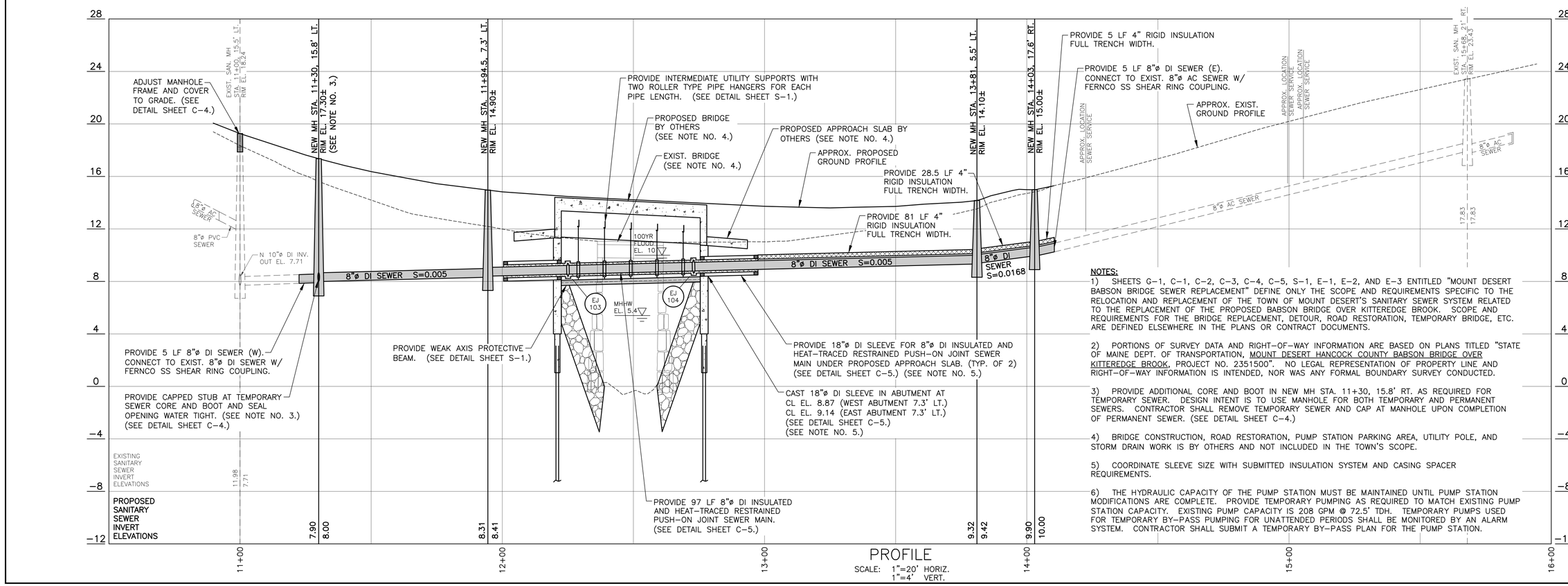

PROFILE
SCALE: 1"=20' HORIZ.
1"=4' VERT.

NOTES:

1) SHEETS G-1, C-1, C-2, C-3, C-4, C-5, S-1, E-1, E-2, AND E-3 ENTITLED "MOUNT DESERT BABSON BRIDGE SEWER REPLACEMENT" DEFINE ONLY THE SCOPE AND REQUIREMENTS SPECIFIC TO THE RELOCATION AND REPLACEMENT OF THE TOWN OF MOUNT DESERT'S SANITARY SEWER SYSTEM RELATED TO THE REPLACEMENT OF THE PROPOSED BABSON BRIDGE OVER KITTEREDGE BROOK. SCOPE AND REQUIREMENTS FOR THE BRIDGE REPLACEMENT, DETOUR, ROAD RESTORATION, TEMPORARY BRIDGE, ETC. ARE DEFINED ELSEWHERE IN THE PLANS OR CONTRACT DOCUMENTS.

2) PORTIONS OF SURVEY DATA AND RIGHT-OF-WAY INFORMATION ARE BASED ON PLANS TITLED "STATE OF MAINE DEPT. OF TRANSPORTATION, MOUNT DESERT HANCOCK COUNTY BABSON BRIDGE OVER KITTEREDGE BROOK, PROJECT NO. 2351500". NO LEGAL REPRESENTATION OF PROPERTY LINE AND RIGHT-OF-WAY INFORMATION IS INTENDED, NOR WAS ANY FORMAL BOUNDARY SURVEY CONDUCTED.

3) PROVIDE ADDITIONAL CORE AND BOOT IN NEW MH STA. 11+30, 15.8' RT. AS REQUIRED FOR TEMPORARY SEWER. DESIGN INTENT IS TO USE MANHOLE FOR BOTH TEMPORARY AND PERMANENT SEWERS. CONTRACTOR SHALL REMOVE TEMPORARY SEWER AND CAP AT MANHOLE UPON COMPLETION OF PERMANENT SEWER. (SEE DETAIL SHEET C-4.)

4) BRIDGE CONSTRUCTION, ROAD RESTORATION, PUMP STATION PARKING AREA, UTILITY POLE, AND STORM DRAIN WORK IS BY OTHERS AND NOT INCLUDED IN THE TOWN'S SCOPE.

5) COORDINATE SLEEVE SIZE WITH SUBMITTED INSULATION SYSTEM AND CASING SPACER REQUIREMENTS.

6) THE HYDRAULIC CAPACITY OF THE PUMP STATION MUST BE MAINTAINED UNTIL PUMP STATION MODIFICATIONS ARE COMPLETE. PROVIDE TEMPORARY PUMPING AS REQUIRED TO MATCH EXISTING PUMP STATION CAPACITY. EXISTING PUMP CAPACITY IS 208 GPM @ 72.5' TDH. TEMPORARY PUMPS USED FOR TEMPORARY BY-PASS PUMPING FOR UNATTENDED PERIODS SHALL BE MONITORED BY AN ALARM SYSTEM. CONTRACTOR SHALL SUBMIT A TEMPORARY BY-PASS PLAN FOR THE PUMP STATION.

PROJECT NO.: 023515.00

OLVER ASSOCIATES INC.
ENVIRONMENTAL ENGINEERS
290 MAIN STREET WINTERPORT, MAINE

STATE OF MAINE WILLIAM OLVER 5246 PROFESSIONAL ENGINEER

DATE	ADDITION OR REVISION	DR.BY: NWD	CK.BY: WMO
		OA PROJECT NO.: 2193	

DES.BY: NWD
SCALE: AS NOTED
DATE: AUGUST, 2024
SHEET: C-3

TOWN OF MOUNT DESERT, MAINE
MOUNT DESERT BABSON BRIDGE
SEWER REPLACEMENT

PERMANENT SEWER PLAN & PROFILE

SHEET NUMBER
C-3

X:\onsite\Projects\MDI\2193 Babsons Bridge Sewer Crossing\MDOT SUBMISSION-FINAL\2193 PR SEWER.dwg, 10/8/2024 1:32:21 PM, 1:1

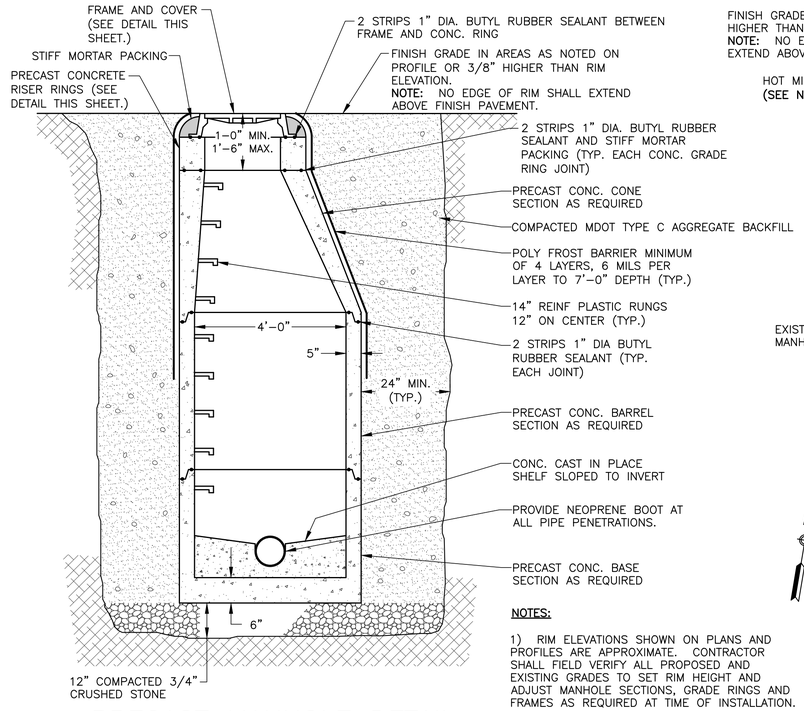

PRECAST MANHOLE DETAIL

NOTES:

1) RIM ELEVATIONS SHOWN ON PLANS AND PROFILES ARE APPROXIMATE. CONTRACTOR SHALL FIELD VERIFY ALL PROPOSED AND EXISTING GRADES TO SET RIM HEIGHT AND ADJUST MANHOLE SECTIONS, GRADE RINGS AND FRAMES AS REQUIRED AT TIME OF INSTALLATION.

2) FRAME HEIGHT MAY VARY TO MEET FINAL GRADE REQUIREMENTS.

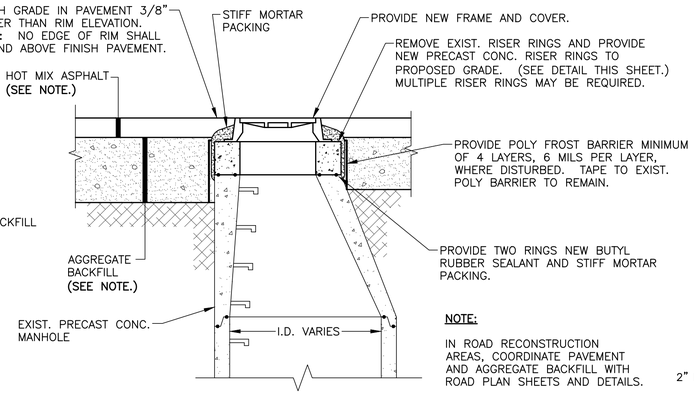

NOTE:

IN ROAD RECONSTRUCTION AREAS, COORDINATE PAVEMENT AND AGGREGATE BACKFILL WITH ROAD PLAN SHEETS AND DETAILS.

PRECAST MANHOLE RAISING DETAIL

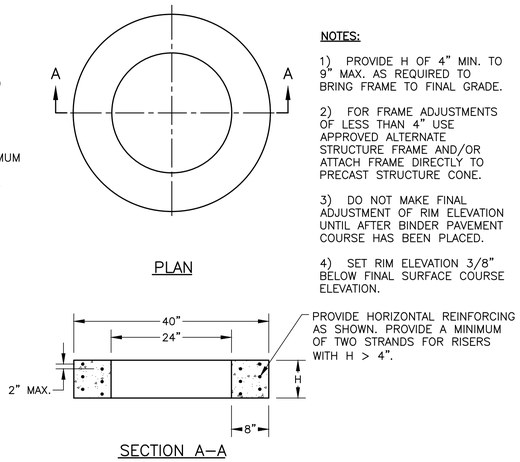

NOTES:

1) PROVIDE H OF 4" MIN. TO 9" MAX. AS REQUIRED TO BRING FRAME TO FINAL GRADE.

2) FOR FRAME ADJUSTMENTS OF LESS THAN 4" USE APPROVED ALTERNATE STRUCTURE FRAME AND/OR ATTACH FRAME DIRECTLY TO PRECAST STRUCTURE CONE.

3) DO NOT MAKE FINAL ADJUSTMENT OF RIM ELEVATION UNTIL AFTER BINDER PAVEMENT COURSE HAS BEEN PLACED.

4) SET RIM ELEVATION 3/8" BELOW FINAL SURFACE COURSE ELEVATION.

PRECAST CONCRETE GRADE RING DETAIL

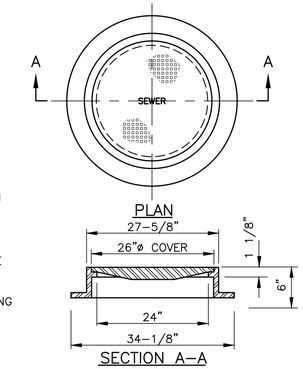

NOTE:

EQUAL TO EAST JORDAN IRON WORKS FRAME NO. 65058 AND COVER NO. 65305 BY E.J. PRESCOTT, INC.

MANHOLE FRAME AND COVER DETAIL

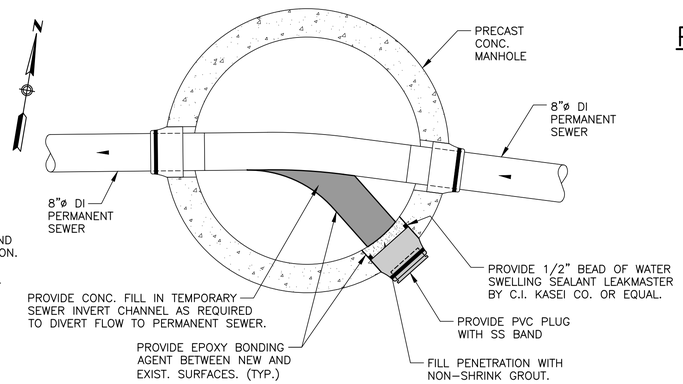

NEW MH STA. 11+30, 15.8' LT. TEMPORARY SEWER REPAIR DETAIL

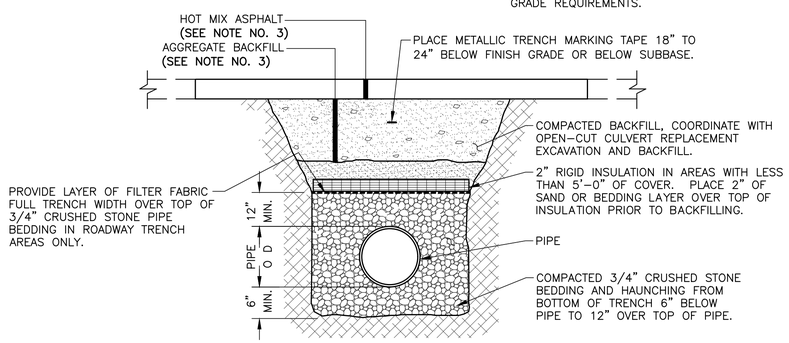

TYPICAL SEWER TRENCH DETAIL FOR FULL ROAD RECONSTRUCTION AREA

NOTES:

1) COORDINATE SEWER TRENCH BACKFILL REQUIREMENTS WITH FULL ROAD CONSTRUCTION AREAS AS SHOWN ON THE ROAD PLAN SHEETS.

2) MAINTAIN UNIFORM TRENCH WIDTH TO 12" OVER PIPE.

3) IN ROAD RECONSTRUCTION AREAS, COORDINATE PAVEMENT AND AGGREGATE BACKFILL WITH ROAD PLAN SHEETS AND DETAILS.

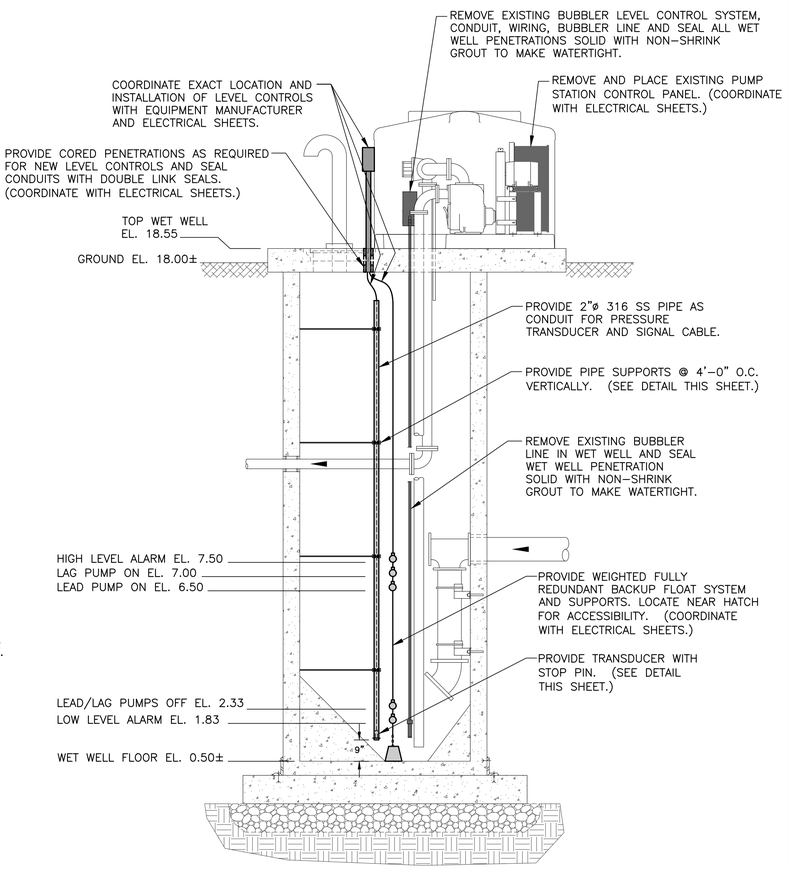

WET WELL LEVEL CONTROL DETAIL

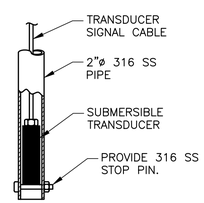

TRANSDUCER INSTALLATION DETAIL

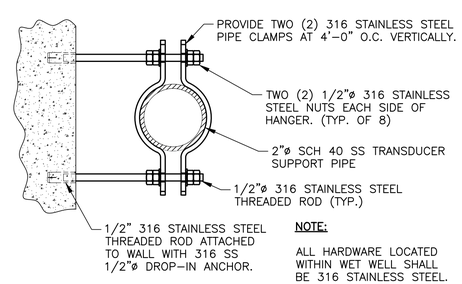

NOTE:

ALL HARDWARE LOCATED WITHIN WET WELL SHALL BE 316 STAINLESS STEEL.

TRANSDUCER SUPPORT PIPES DETAIL

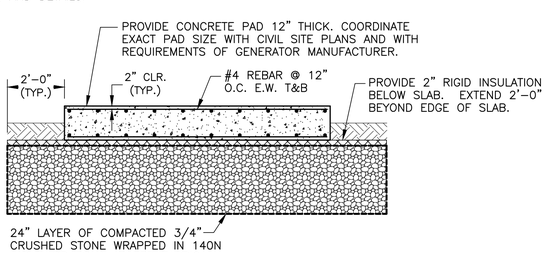

EMERGENCY GENERATOR PAD DETAIL

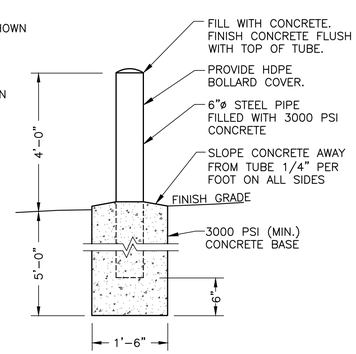

CONCRETE FILLED PIPE BOLLARD DETAIL

PROJECT NO.: 023515.00

OLVER ASSOCIATES INC.
ENVIRONMENTAL ENGINEERS
290 MAIN STREET WINTERPORT, MAINE

STATE OF MAINE WILLIAM COVER No. 5246 PROFESSIONAL ENGINEER LICENSED

DATE	ADDITION OR REVISION	DR.BY: NWD	CK.BY: WMO
		QA. PROJECT NO.: 2193	
		SHEET: C-4	

DES.BY: NWD
SCALE: NONE
DATE: AUGUST, 2024

TOWN OF MOUNT DESERT, MAINE
MOUNT DESERT BABSON BRIDGE SEWER REPLACEMENT

CIVIL DETAILS

SHEET NUMBER

C-4

X:\nassoc\Projects\MDI\2193 Babsons Bridge Sewer Crossing\MDOT SUBMISSION-FINAL\2193 DETAILS.dwg, 10/8/2024 1:32:25 PM, 1:1

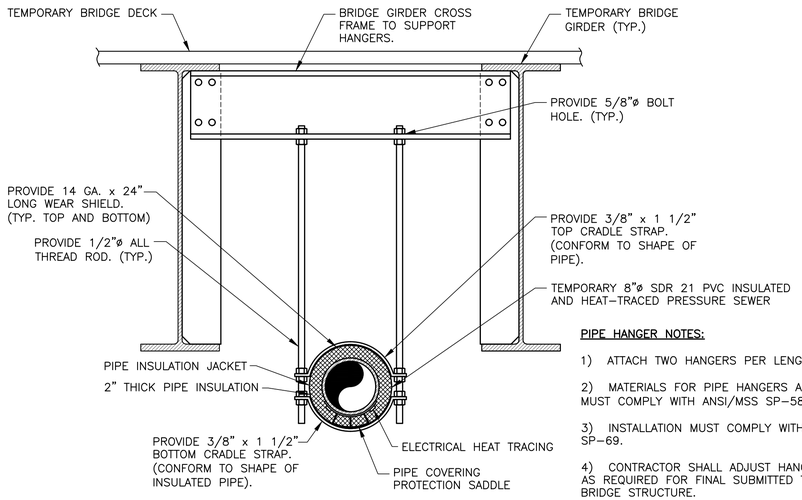

END VIEW

PIPE HANGER NOTES:

1) ATTACH TWO HANGERS PER LENGTH OF PIPE.

2) MATERIALS FOR PIPE HANGERS AND SUPPORTS MUST COMPLY WITH ANSI/MSS SP-58.

3) INSTALLATION MUST COMPLY WITH ANSI/MSS SP-69.

4) CONTRACTOR SHALL ADJUST HANGER SYSTEM AS REQUIRED FOR FINAL SUBMITTED TEMPORARY BRIDGE STRUCTURE.

5) THIS DETAIL APPLIES ONLY TO TEMPORARY BRIDGE SEWER SUPPORTS. SEE SHEET S-1 FOR PERMANENT BRIDGE SEWER SUPPORT DETAILS.

TEMPORARY BRIDGE SEWER MAIN HANGER DETAIL

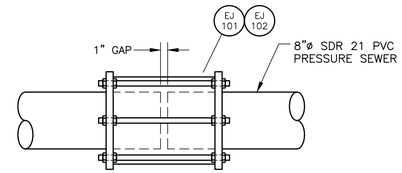

TEMPORARY BRIDGE BRIDGE EXPANSION JOINT DETAIL

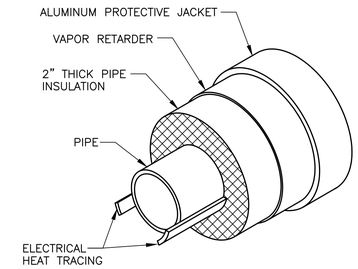

NOTES:

1) INSTALL ALL COMPONENTS BASED UPON MANUFACTURERS RECOMMENDATIONS.

2) FIELD INSULATE FITTINGS BASED ON MANUFACTURER'S RECOMMENDATIONS.

3) APPLY WEATHER BARRIER COATING TO ALL EXPOSED EDGES OF INSULATION.

EXPOSED SEWER MAIN INSULATION DETAIL

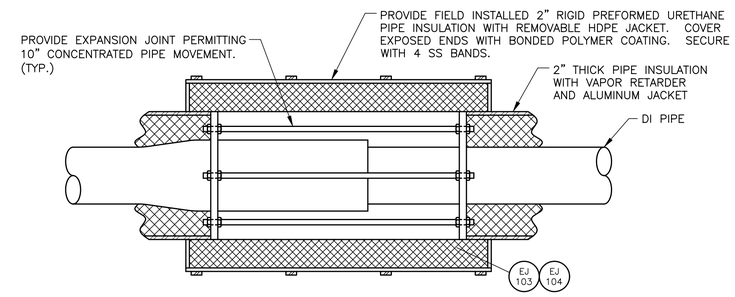

TYPICAL PERMANENT BRIDGE PIPE EXPANSION FITTING DETAIL

NOTE:

COORDINATE SLEEVE SIZE WITH SUBMITTED INSULATION SYSTEM AND CASING SPACER REQUIREMENTS.

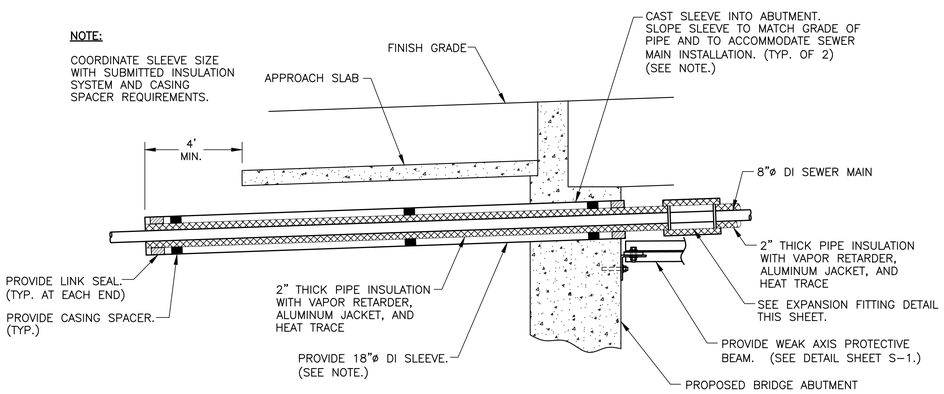

TYPICAL ABUTMENT PENETRATION DETAIL

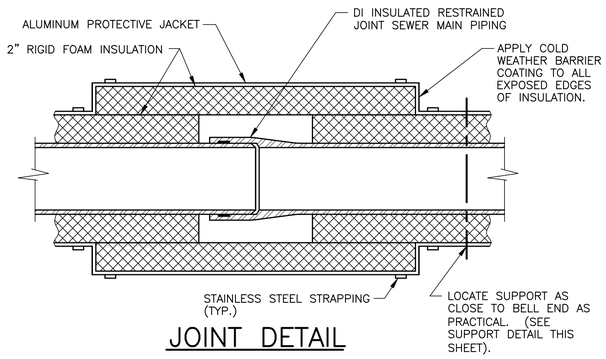

JOINT DETAIL

PROJECT NO.: 023515.00

OLVER ASSOCIATES INC.
ENVIRONMENTAL ENGINEERS
290 MAIN STREET WINTERPORT, MAINE

STATE OF MAINE WILLIAM M. OLVER No. 5246 PROFESSIONAL ENGINEER

DATE	ADDITION OR REVISION

DES.BY: NWD | DR.BY: NWD | CK.BY: WMO
SCALE: NONE | OA PROJECT NO.: 2193
DATE: AUGUST, 2024 | SHEET: C-5

TOWN OF MOUNT DESERT, MAINE
MOUNT DESERT BABSON BRIDGE SEWER REPLACEMENT

CIVIL DETAILS

SHEET NUMBER
C-5

X:\oasse\Projects\MDI\2193 Babsons Bridge Sewer Crossing\MDOT SUBMISSION-FINAL\2193 DETAILS.dwg, 10/8/2024 1:32:25 PM, 1:1

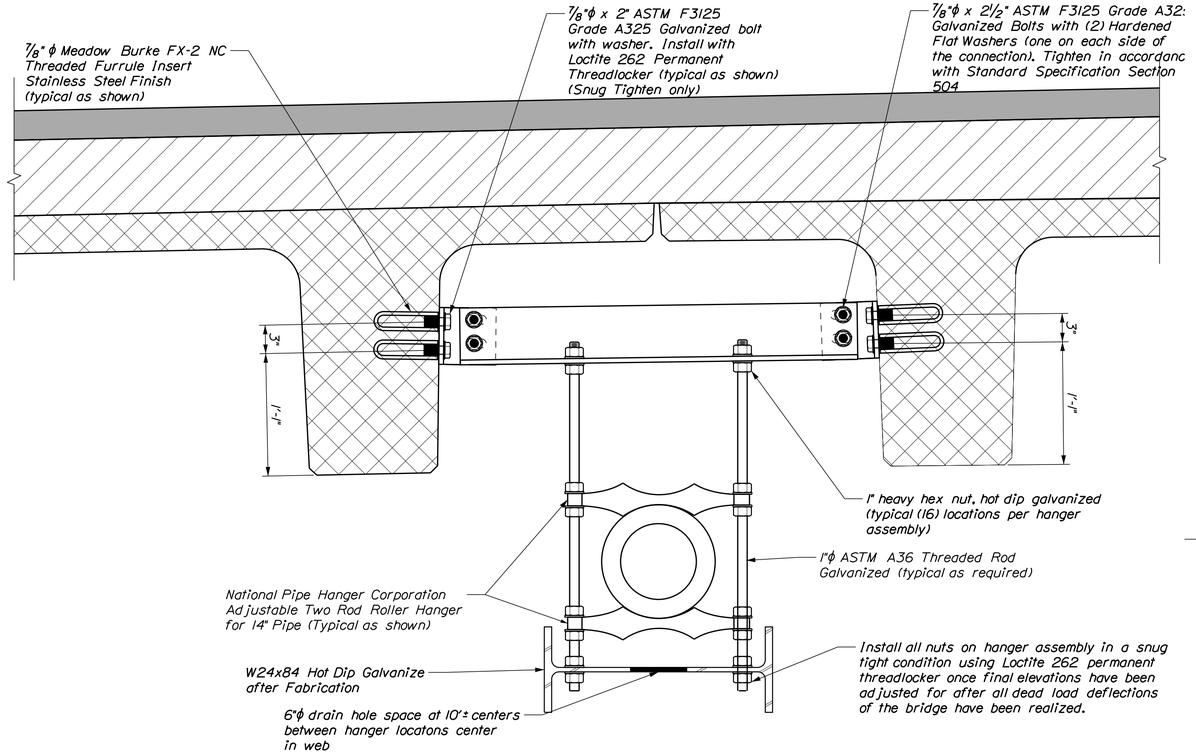

UTILITY SECTION LOOKING UPSTATION

(Install (2) hanger assemblies for each length of pipe, do not install hanger assemblies at expansion joint locations. Maximum spacing = 20'-0")

General Notes:

1. Report any observed discrepancy between these plans and actual observed field conditions.
2. Do not proceed with any dependent work until any such reported discrepancy is resolved to the satisfaction of the engineer of record.
3. Angle Iron to be ASTM A36 Hot dipped galvanized after fabrication in accordance with ASTM A123
4. W24x84 to be ASTM A992 grade 50 Hot dipped galvanized (may be double dipped)
5. All non stainless fasteners to be hot dipped galvanized in accordance with ASTM A153

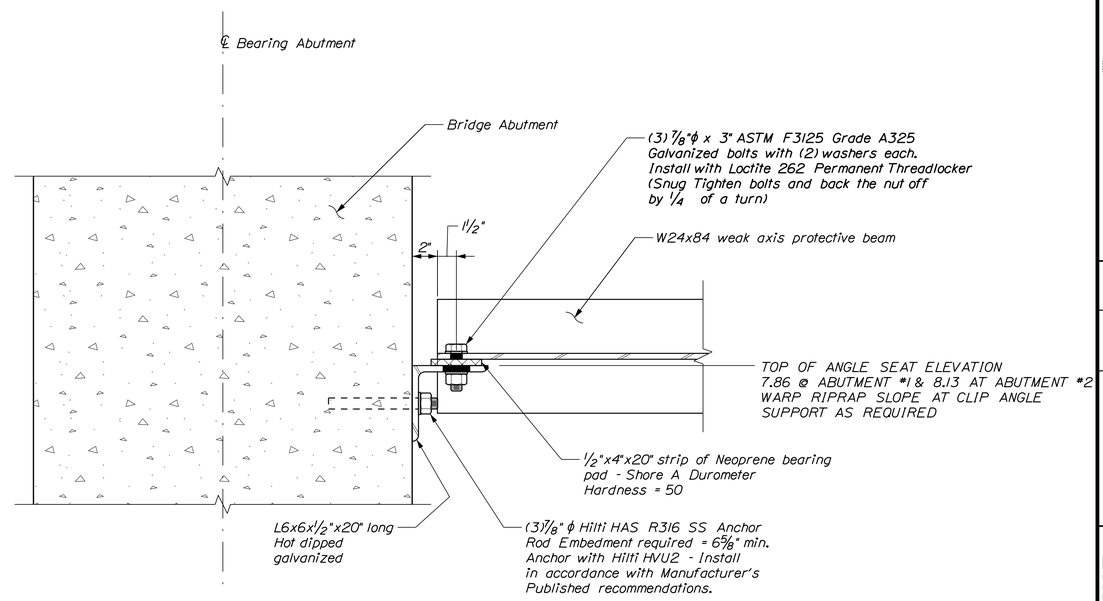

ABUTMENT W24X84 SEAT ANGLE

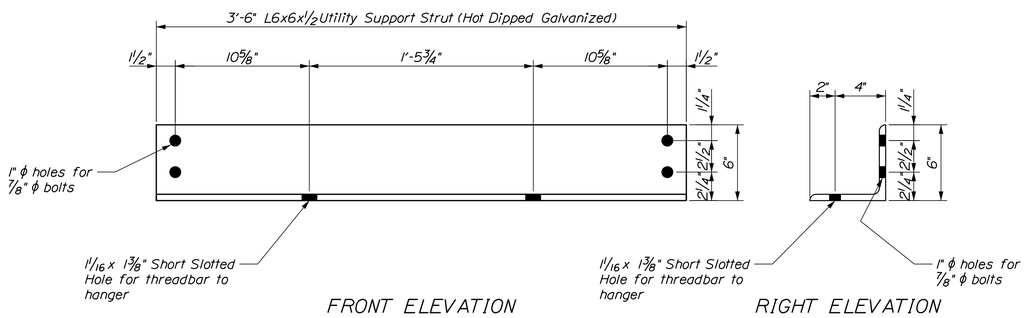

FRONT ELEVATION

RIGHT ELEVATION

UTILITY HANGER STRUT

(1) L6x6x1/2" HANGER STRUT REQUIRED AT EACH UTILITY HANGER LOCATION

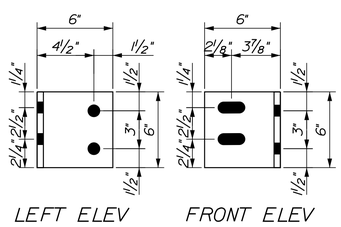

LEFT ELEV

FRONT ELEV

RIGHT SIDE CLIP ANGLE

LEFT SIDE CLIP ANGLE TO BE OPPOSITE HAND (1) LEFT SIDE AND (1) RIGHT SIDE CLIP ANGLE REQUIRED AT EACH HANGER LOCATION. CLIP ANGLES TO BE L6X6X1/2" HOT DIPPED GALVANIZED

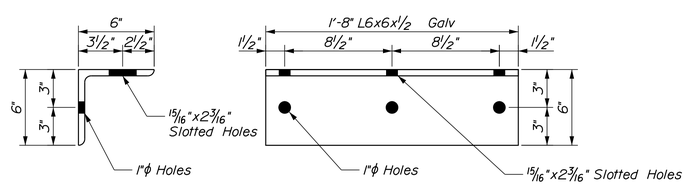

LEFT ELEV

FRONT ELEV

W24x84 SUPPORT ANGLE

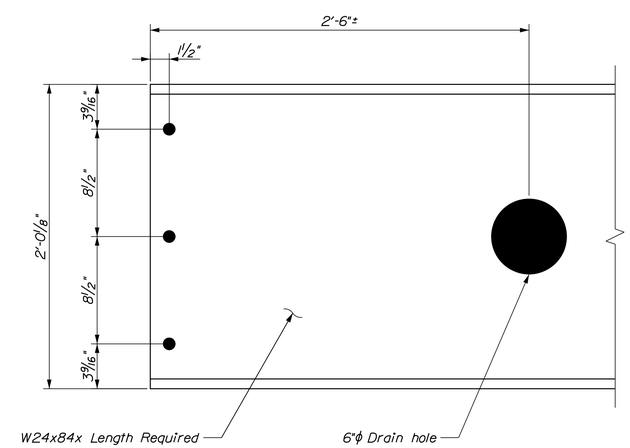

W24x84 END PLAN VIEW

(TYPICAL AT EACH END)

CALDERWOOD ENGINEERING, ETC.
STRUCTURAL ENGINEERING • DETAILING SERVICES
3 Industrial Parkway, Suite 2, Brunswick, ME 04011 PH (207)737-2007

OLVER ASSOCIATES INC.
ENVIRONMENTAL ENGINEERS
230 MAIN STREET WINTERPORT, MAINE

STATE OF MAINE ERIC CALDERWOOD No. 9099 LICENSED PROFESSIONAL ENGINEER

9099 P.E. NUMBER

AUG 2024 DATE

	BY	DATE
	ETC	AUG 2024
DESIGN-DETAILED		
CHECKED-REVIEWED		
REVISIONS 1		
REVISIONS 2		
REVISIONS 3		
REVISIONS 4		
FIELD CHANGES		

TOWN OF MOUNT DESERT, MAINE
MOUNT DESERT BABSON BRIDGE
SEWER REPLACEMENT

SEWER LINE SUPPORT DETAILS

SHEET NUMBER

S-1

Filename: ...\Mount Desert Island.dgn Workgroup: Structures Division Username: common Date:9/16/2024

Copyright (C)2024, Lanpher Associates, Inc.

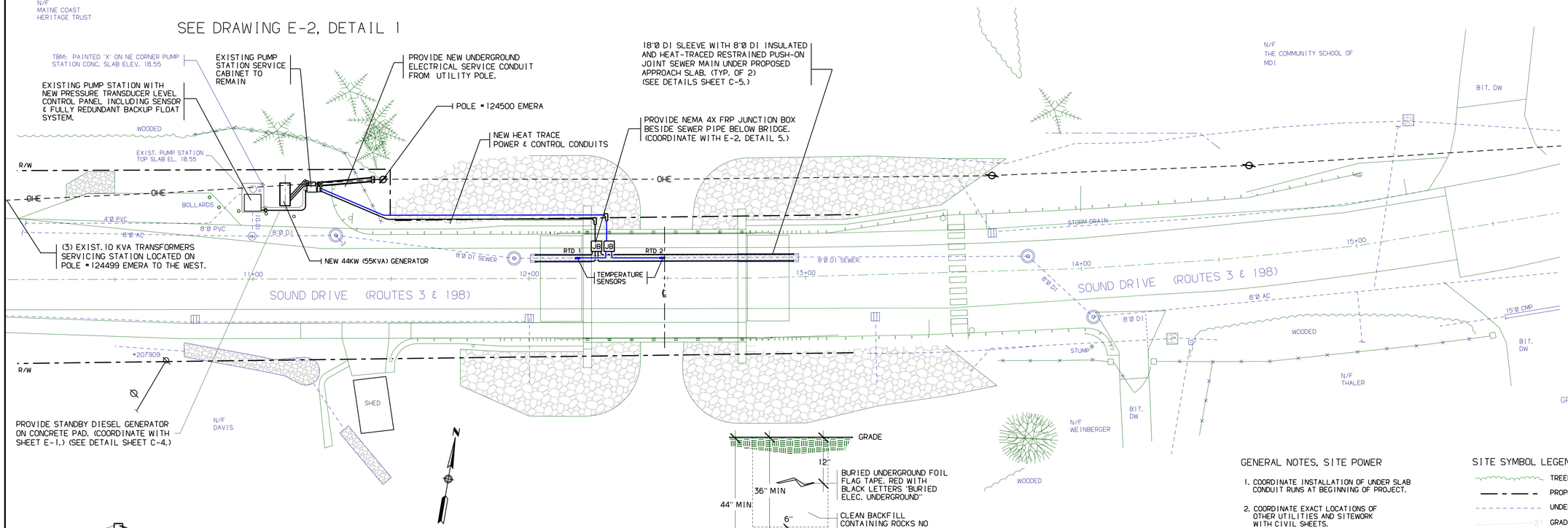

1 / E1 BABSON CREEK ELECTRICAL SITE PLAN

SCALE 1" = 20'

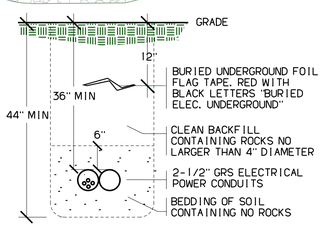

NOTE: COORDINATE WITH ENGINEERS FOR ADJUSTMENT OF DEPTH IF LEDGE IS FOUND

3 / E2 BURIED ELECTRIC CONDUIT

SCALE: NONE

GENERAL NOTES, SITE POWER

1. COORDINATE INSTALLATION OF UNDER SLAB CONDUIT RUNS AT BEGINNING OF PROJECT.
2. COORDINATE EXACT LOCATIONS OF OTHER UTILITIES AND SITEWORK WITH CIVIL SHEETS.
3. CALL DIGSAFE (888) 344-7233 TO DETERMINE LOCATION OF UTILITY CABLES BEFORE EXCAVATION.
4. SEE SPECIFICATIONS FOR PROJECT PHASING REQUIREMENTS
5. PROVIDE EXPANSION JOINTS ON ALL RISER CONDUITS BURIED LESS THAN 4' BELOW GRADE

SITE SYMBOL LEGEND

- TREELINE
- PROPERTY LINE
- UNDERGROUND UTILITY
- GRADE ELEVATION

SITE POWER SYMBOL LEGEND

- UNDERGROUND CABLE
- 3 CONDUCTORS & GROUND
- EXISTING EQUIPMENT
- ELECTRIC POLE
- UTILITY CO. METER
- POWER PANEL
- MOTOR, SIZE AS INDICATED
- XFER / PANELS / MDP — ELECTRIC SERVICE PEDESTAL
- NEW GENERATOR
- EXISTING PUMP STATION

POWER RISER SYMBOL LEGEND

- P-1 — POWER PANEL
- AUTOMATIC TRANSFER SWITCH
- 15 — EXISTING PUMP MOTOR
- CIRCUIT BREAKER
- LINE FUSE
- MOTOR LOAD AS LISTED
- DISCONNECT SWITCH
- GFCI — DUPLEX RECEPTACLE GFCI GROUND FAULT INTERUPTER
- CONDULET LB
- GRS EXPANSION JOINT

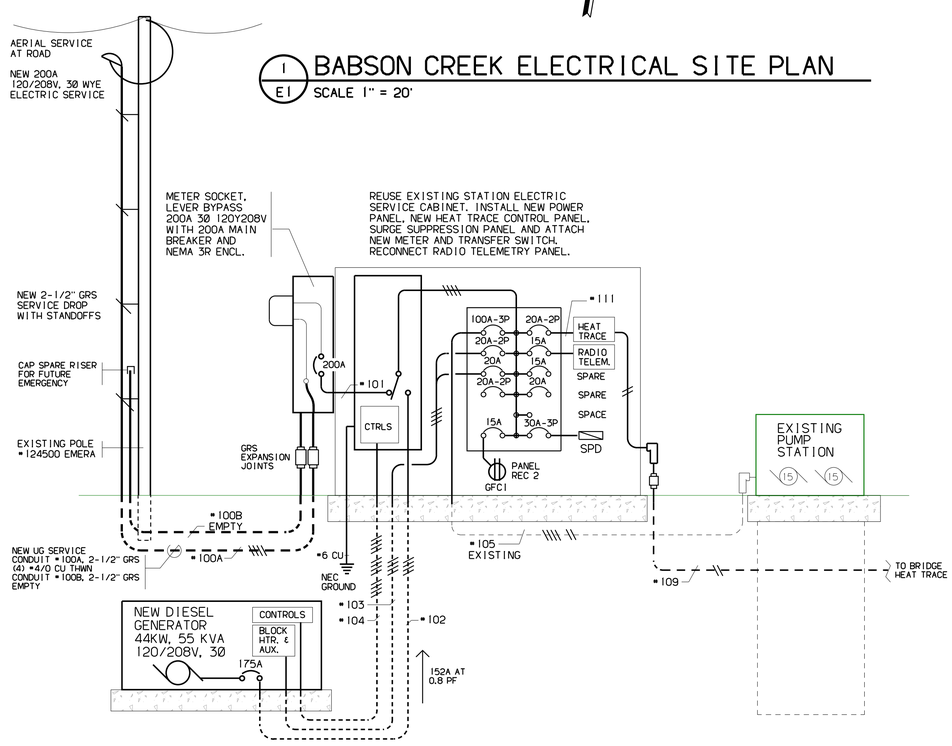

2 / E1 BABSON CREEK PUMP STATION POWER RISER

SCALE: NONE

CONDUIT #100A, 2-1/2" GRS, SERVICE ENTRANCE
(4) #4/0 CU THWN, 200A, 120/208V STATION POWER

CONDUIT #100B, 2-1/2" GRS EMPTY SPARE

CONDUIT #101, 2" GRS, METER TO TRANSFER SWITCH
(4) #4/0 CU THWN, & #6 CU BOND, 120/208V STATION POWER

CONDUIT #102, 2" GRS, GENERATOR TO TRANSFER SWITCH
(4) #2/0 CU THWN, & #6 CU BOND, 175A, 120/208V GENERATOR POWER

CONDUIT #103, 1" GRS, GENERATOR AUXILIARIES
(2) #12 CU THWN CU & #12 CU BOND, CHARGER
(2) #12 CU THWN CU & #12 CU BOND, 1.5 KW 208V, BLOCK HEATER

CONDUIT #104, 1" GRS, GENERATOR CONTROLS
(4) #14 CU THWN, CONTROLS
(2) #14 CU THWN, SPARES
(1) #14 CU THWN, GENERATOR GENERAL ALARM
(1) #14 CU THWN, GENERATOR LOW FUEL & TANK RUPTURE ALARM
(1) #14 CU THWN, COMMON ALARM RETURN

CONDUIT #105, 1-1/2" GRS EXIST. U.G. PUMP STATION FEEDER
(4) #2 CU THWN & #6 CU BOND, 120/208V POWER FEED
(2) #12 CU THWN, 120V ALARM BEACON

CONDUIT #106, 1" GRS, PUMP STATION TELEMETRY ALARM SIGNALS
(9) #14 CU THWN & #12 CU BOND, DRY CONTACT TELEMETRY
(2) #14 CU THWN ,SPARES

CONDUIT #107, 1" GRS, P.S. & GENERATOR ALARM SIGNALS
(7) #14 CU THWN & #12 CU BOND, P.S. DRY CONTACT TELEMETRY
(3) #14 CU THWN , GENERATOR DRY CONTACT TELEMETRY

CONDUIT #108, 1/2" AL, HEAT TRACE TELEMETRY
(2) #14 CU THWN , DRY CONTACT TELEMETRY

CONDUIT #109, 1" GRS, HEAT TRACE POWER
(2) #12 CU THHN & #10 CU BOND, 208V POWER

CONDUIT #110, 1" GRS, HEAT TRACE SENSORS
(3) #18 AWG CU 3 COND. WITH OVERALL SHIELD
(2) ACTIVE SENSORS, (1) SPARE CABLE TO JB UNDER BRIDGE

CONDUIT #111, 1/2" AL, RADIO TELEMETRY PANEL
(2) 12 CU THHN & #12 CU BOND, 120V POWER

CONDUIT #112, 1" AL, COMBINED RADIO TELEMETRY PANEL
(12) 12 CU THHN & #12 CU BOND, DRY CONTACT SIGNALS

CONDUIT #113, 3/4" GRS, TELEMETRY ANTENNA
(1) MATCH EXISTING RG CABLE AS NEEDED, SEE SHEET E-3, DETAIL 2 PLAN VIEW

CONDUIT #114, 1/2" AL, STATION LED BEACON, SEE SHEET E-3, DETAIL 2 FRONT
(2) 12 CU THHN & #12 CU BOND, 120V POWER, VIA CONDUIT #105

CABLES #200 - 206, SEE DRAWING E-2, DETAIL 2
PUMP STATION POWER, CONTROLS & ALARM REWIRING

4 / E1 CONDUIT & WIRE SCHEDULE

SCALE: NONE

120/208V, 3Ø, 200A, MAIN LUG, SURFACE MOUNT, NEMA 1 ENCLOSURE, 10,000 AIC

NO	AMP	DESCRIPTION	NO	AMP	DESCRIPTION
01	100	PUMP	02	20	HEAT TRACE
03	100	STATION	04	20	CONTROL PANEL
05	100	FEED	06	15	RADIO TELEMETRY PANEL
07	20	GENERATOR	08	15	SPARE
09	20	BLOCK HEATER	10	20	SPARE
11	20	GENERATOR AUXILLIARIES	12		SPACE
13	20	SPARE	14	30	SURGE
15	20		16	30	PROTECTION
17	15	PANEL RECEPTACLE	18	30	DEVICE

5 / E1 POWER PANEL P

SCALE: NONE

STATION SERVICE PANEL

TAG	EQUIPMENT DESCRIPTION	HP	VOLTS	PHASE	KW	AMPS	KVA	BRK	PANEL	CIR
P-1	PUMP MOTOR NO. 1	15	208V	3Ø	12.6	41.0	14.8	90A	PSP	—
P-2	PUMP MOTOR NO. 2	15	208V	3Ø	12.6	41.0	14.8	90A	PSP	—
FM	P.S. FAN MOTOR	1/8	120V	1Ø	0.17	2.2	0.17	15A	PSP	—
REC1	P.S. RECEPTACLE		120V	1Ø	1.8	15.0	1.8	15A	PSP	—
T1	P.S. POWER TRANSFORMER		208V	1Ø	3.0	14.4	3.0	15A	PSP	—
CTRL	P.S. CONTROL PANEL		120V	1Ø	0.5	4.2	0.5	15A	PSP	—
AP1	~~AIR PUMP 1~~ (REMOVED)		120V	1Ø	0.0	0.0	0.0	—	PSP	—
AP2	~~AIR PUMP 2~~ (REMOVED)		120V	1Ø	0.0	0.0	0.0	—	PSP	—
HTR	ELEC HEATER (NOT LISTED)		120V	1Ø	3.0	20.8	3.0	??	PSP	—
TRACE	HEAT TRACE (~100' X 2, 5W/FT)		208V	1Ø	1.0	4.8	1.2	15A	P1	02,04
TEL	RADIO TELEMETRY PANEL		120V	1Ø	0.2	1.7	0.2	15A	P1	06
GEN	GENSET BLOCK HEATER		208V	1Ø	2.5	12.0	2.5	20A	P1	07,09
REC2	SERVICE PANEL RECEPT.		120V	1Ø	1.8	15.0	1.8	15A	P1	17

6 / E1 EQUIPMENT ELECTRIC SCHEDULE

SCALE: NONE

LANPHER ASSOCIATES INC.
CIVIL ENGINEERS, LAND SURVEYORS
BOX 472, CNR. SUMMIT RD.
WINTERPORT, MAINE 04496
TEL. (207)876-3350 FAX 276-4067

PROJECT NO.: 023515.00

OLVER ASSOCIATES INC.
ENVIRONMENTAL ENGINEERS
258 MAIN STREET WINTERSPORT, MAINE

STATE OF MAINE — DWIGHT MARTIN LANPHER 5387 — LICENSED PROFESSIONAL ENGINEER

DATE	ADDITION OR REVISION

DES.BY: DML	DR.BY: DML	CK.BY: EH	LA 2024-007
SCALE: AS NOTED		OA PROJECT NO.: 2193	
DATE: AUGUST, 2024		SHEET: E-1	

TOWN OF MOUNT DESERT, MAINE
MOUNT DESERT BABSON BRIDGE
SEWER REPLACEMENT

ELECTRICAL SITE PLAN POWER RISER & SCHEDULES

SHEET NUMBER

E-1

August 14, 2024

xserver:L:A Archive: F-N: MD Babson Creek Generator

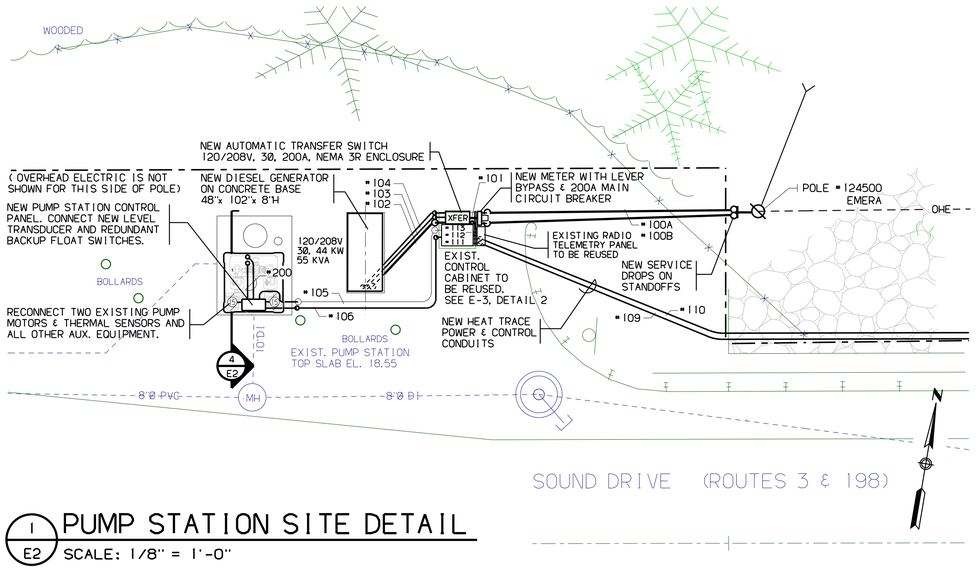

1 / E2 PUMP STATION SITE DETAIL

SCALE: 1/8" = 1'-0"

GENERAL NOTES: PUMP STATION

1. BEFORE POURING NEW GENERATOR CONCRETE PAD, COORDINATE EXACT LOCATION OF GENERATOR CONDUIT RISER LOCATIONS WITH MANUFACTURER'S SHOP DRAWINGS
2. RECONNECT TWO EXISTING 15 HP PUMP MOTORS AND THERMAL SENSORS TO NEW PUMP STATION CONTROL PANEL.
3. RECONNECT ALL EXISTING PUMP STATION AUXILLIARY EQUIPMENT TO NEW PUMP STATION CONTROL PANEL, INCLUDING, BUT NOT LIMITED TO FANS, RECEPTACLES, AND HEATERS. SEE DRAWING E-1, DETAIL 5.
4. RECONNECT EXISTING PUMP STATION ALARM BEACON WIRING TO NEW PANEL. SEE DRAWING E-3, DETAIL 3.
5. INSTALL TERMIANL BOX WITH SEALS. SEE SPECIFICATION SECTION 16100, PART 2.06, PARAGRAPH E.

PUMP STATION PUMP MOTORS & ALARM REWIRING IS NOT SHOWN. SEE THIS SHEET, DETAIL 4.

CONDUIT #200, 1" AL, WET WELL LEVEL CONTROLS TO NEW CONTROL PANEL
(10) #14 CU THWN, FLOAT SWITCHES
(1) 3-COND SHIELDED CABLE, SENSOR (MATCH NEW SENSOR CABLE TYPE)

CABLE #201, MFG'S FLOAT SWITCH (SEE SECTION DETAIL 4)
(1) WP FLEX CABLE SUPPLIED WITH FLOAT SWITCH, HIGH LEVEL ALARM

CABLE #202, MFG'S FLOAT SWITCH (SEE SECTION DETAIL 4)
(1) WP FLEX, SUPPLIED WITH FLOAT SWITCH, LAG PUMP ON

CABLE #203, MFG'S FLOAT SWITCH (SEE SECTION DETAIL 4)
(1) WP FLEX, SUPPLIED WITH FLOAT SWITCH, LEAD PUMP ON

CABLE #204, MFG'S FLOAT SWITCH (SEE SECTION DETAIL 4)
(1) WP FLEX, SUPPLIED WITH FLOAT SWITCH, ALL PUMPS OFF

CABLE #205, MFG'S FLOAT SWITCH (SEE SECTION DETAIL 4)
(1) WP FLEX CABLE SUPPLIED WITH FLOAT SWITCH, LOW LEVEL ALARM

CABLE #206, MFG'S LEVEL SENSOR (SEE SECTION DETAIL 4)
(1) WP FLEX CABLE SUPPLIED WITH PRESSURE SENSOR, WET WELL LEVEL

2 / E2 CONDUIT & WIRE SCHEDULE

SCALE NONE — EXISTING PUMP STATION

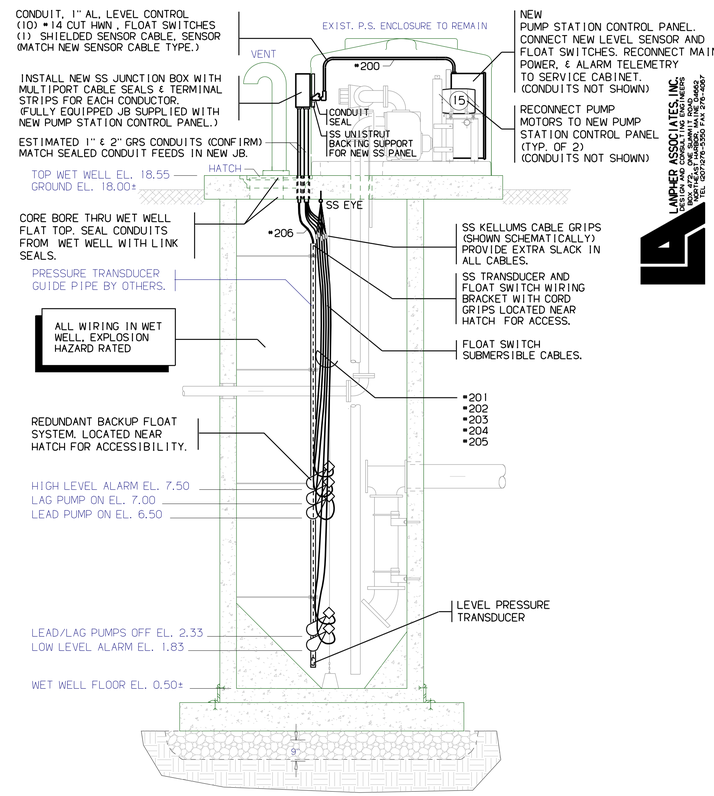

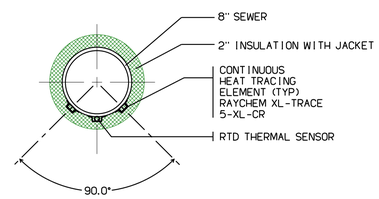

3 / E2 HEAT TRACE DETAIL

SCALE NONE — SEWER PIPE SECTION

4 / E2 WET WELL LEVEL CONTROL DETAIL

SCALE: NONE — PUMP STATION SECTION

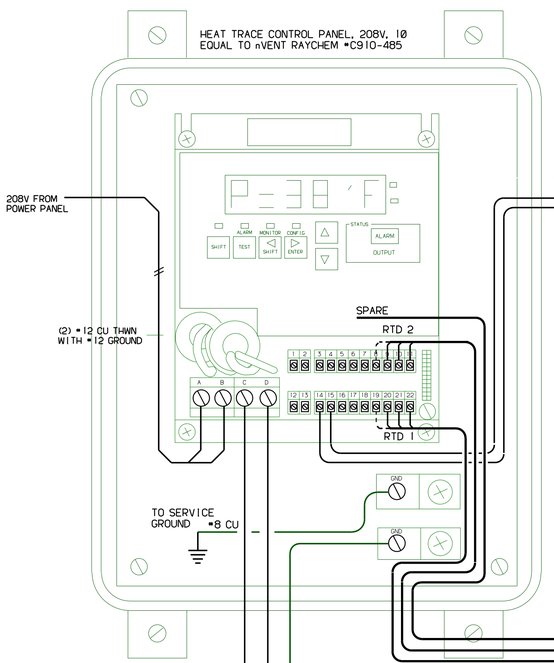

HEAT TRACE CONTROLLER PIN OUTS

A. L1 INPUT
B. L2 INPUT
C. LOAD L1 LINE OUTPUT
D. LOAD L2 LINE OUTPUT

1. L1/LINE OUT EQUAL TO INPUT VOLTAGE
2. L2/NEUTRAL OUT
3. +12V OUTPUT
4. COMMON RETURN
5.
6. EXTERNAL INPUT +
7. EXTERNAL INPUT -
8. RTD2 DRAIN (BRAID)
9. RTD2 SOURCE (WHITE)
10. RTD2 SENSE (WHITE)
11. RTD2 COMMON (RED)
12. AC TRIAC ALARM RELAY
13. AC TRIAC ALARM RELAY
14. DRY CONTACT ALARM RELAY
15. DRY CONTACT ALARM RELAY
16. 485 COMMUNICATIONS DATA +
17. 485 COMMUNICATIONS DATA -
18. 485 COMMUNICATIONS DRAIN
19. RTD1 DRAIN (BRAID)
20. RTD1 SOURCE (WHITE)
21. RTD1 SENSE (WHITE)
22. RTD1 COMMON (RED)

GENERAL NOTES:

1. PROGRAM HEAT TRACE CONTROLLER TO CLOSE OUTPUT CONTACTS 14 AND 15 DURING ALARM CONDITION.
2. DO NOT RUN RTD THERMAL SENSOR WIRING IN SAME CONDUIT WITH HEAT TRACE POWER.

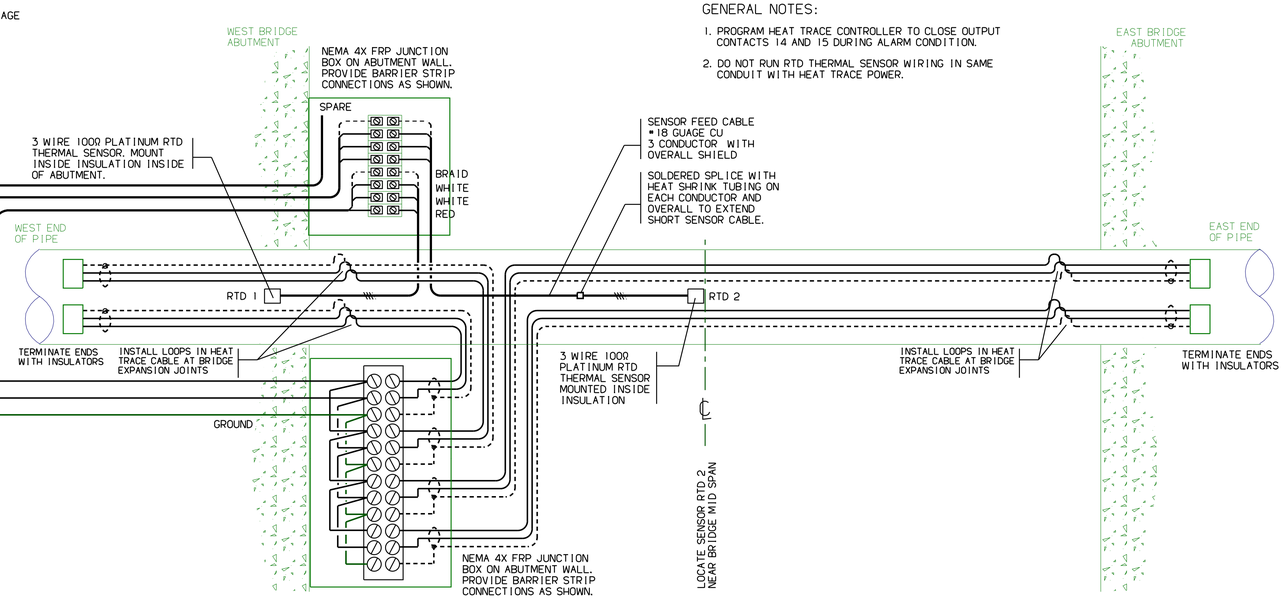

5 / E2 HEAT TRACE WIRING

SCALE: NONE

LAMPHER ASSOCIATES, INC.
CIVIL ENGINEERS & LAND SURVEYORS
BOX 472
PORT CLYDE, SUMMIT RD.
STONINGTON, MAINE 04681
TEL: (207)376-3550 FAX 376-4067

PROJECT NO.: 023515.00

OLVER ASSOCIATES INC.
ENVIRONMENTAL ENGINEERS
WINTERPORT, MAINE
298 MAIN STREET

STATE OF MAINE DWIGHT MARTIN LAMPHER 5387 LICENSED PROFESSIONAL ENGINEER

DATE	ADDITION OR REVISION

DES.BY: DML	DR.BY: DML	CK.BY: EH	
SCALE: AS NOTED		OA PROJECT NO.: 2193	LA 2024-007
DATE: AUGUST, 2024		SHEET: E-2	

TOWN OF MOUNT DESERT, MAINE
MOUNT DESERT BABSON BRIDGE
SEWER REPLACEMENT

ELECTRICAL P.S. SECTION & HEAT TRACE DETAILS

SHEET NUMBER

E-2

Copyright (C)2024, Lampher Associates, Inc.
August 14, 2024
xserver1:A Archive: F-N: MD Babson Creek Generator

Copyright (C)2024, Lanpher Associates, Inc.
August 14, 2024
xserver:LA Archive: F-N: MD Babson Creek Generator

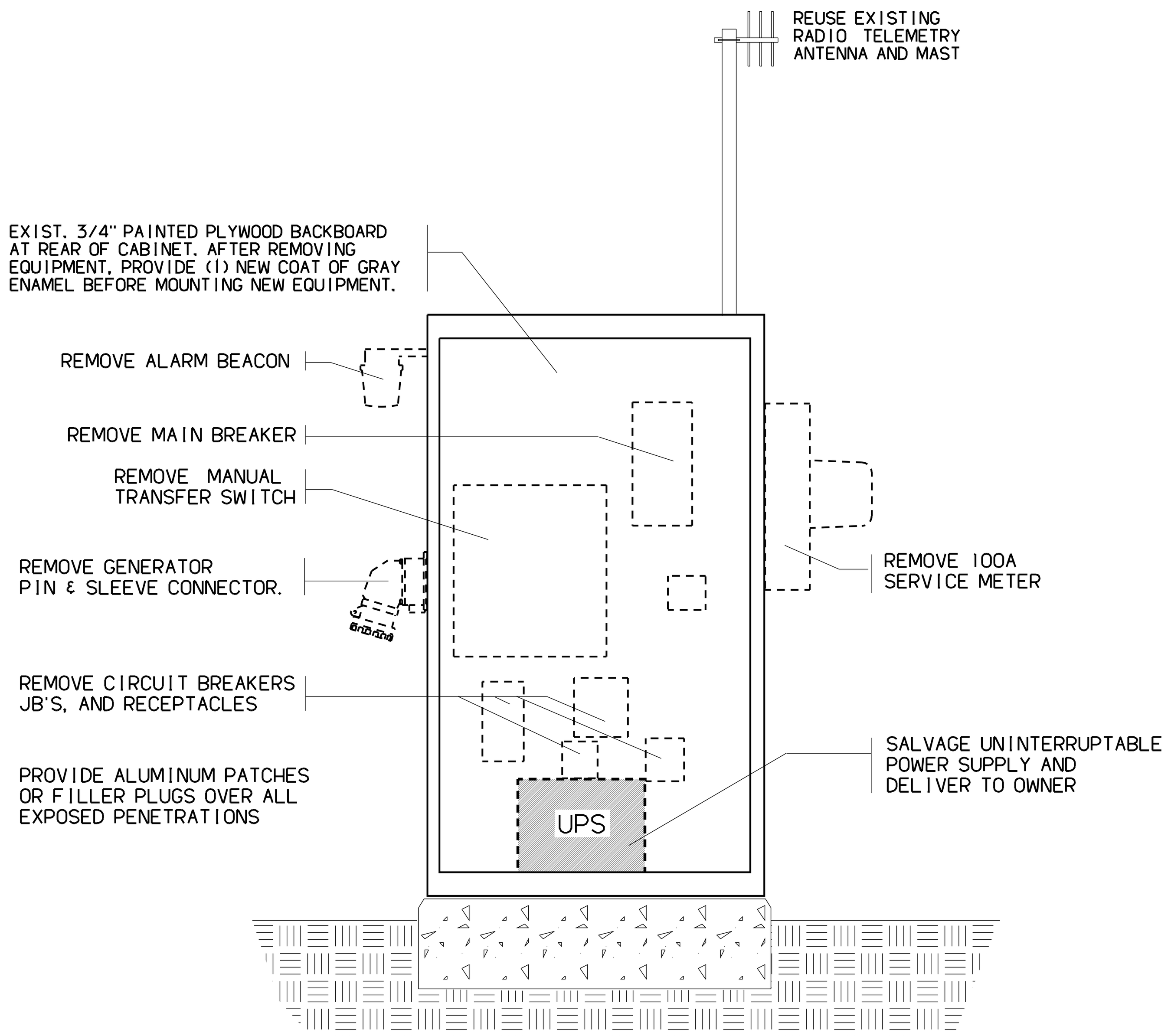

1/E3 CONTROL CABINET DEMOLITION
SCALE 3/4"=1'-0"

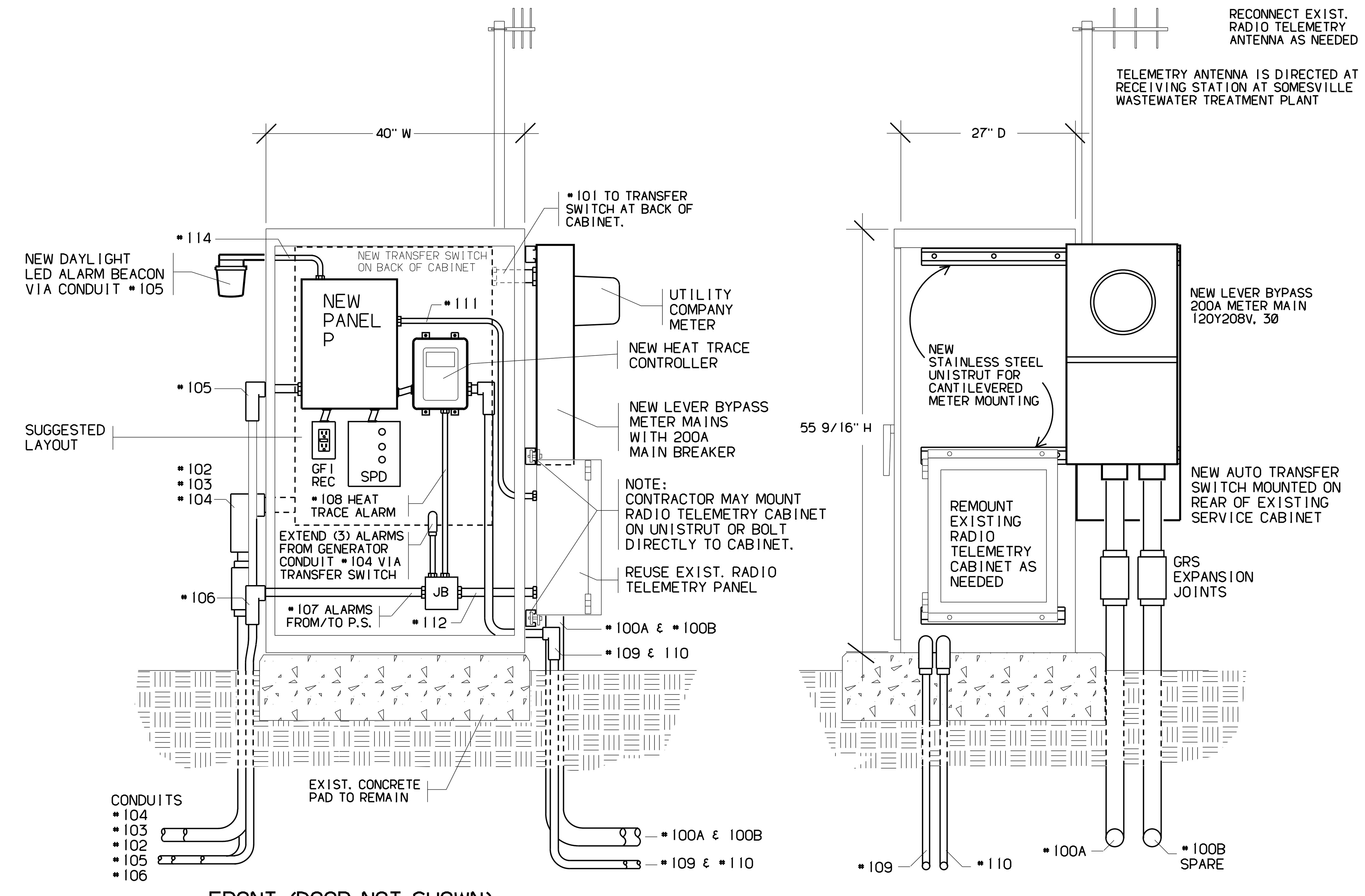

GENERAL NOTES

1. OTHER DEVICES SHOWN FOR COORDINATION PURPOSES ONLY.
2. ALIGN DEVICES ON VERTICAL & HORIZONTAL CENTERS WHERE PRACTICAL.
3. RECONNECT ALL EXISTING DEVICES AS NECESSARY.
4. ALL SCREWS, FASTENERS & OTHER HARDWARE TO BE STAINLESS.
5. ROUTE INPUT AND OUTPUT LOW LEVEL SIGNALS IN SEPARATE CONDUITS AS SHOWN. DO NOT COMBINE WITHOUT PRIOR AUTHORIZATION OF ENGINEERS.
6. ALL CONTROLS SHALL BE WIRED WITH CLASS I WIRING METHODS REGARDLESS OF VOLTAGE FOR SECURE AND PROTECTED CONNECTIONS.
7. TEST ALL CONTROL CIRCUITS FOR SHORTS BEFORE CONNECTING TO DEVICES.
8. ASSIGN EQUIPMENT CHANNELS IN ORDER SHOWN OR CONSULT WITH ENGINEERS FOR PRIOR APPROVAL OF MODIFICATIONS.
9. COORDINATE CONTROL WIRING REQUIREMENTS WITH MANUFACTURER'S SHOP DRAWINGS.
10. CALL DIGSAFE (888) 344-7233 TO DETERMINE LOCATION OF UTILITY CABLES BEFORE EXCAVATION.

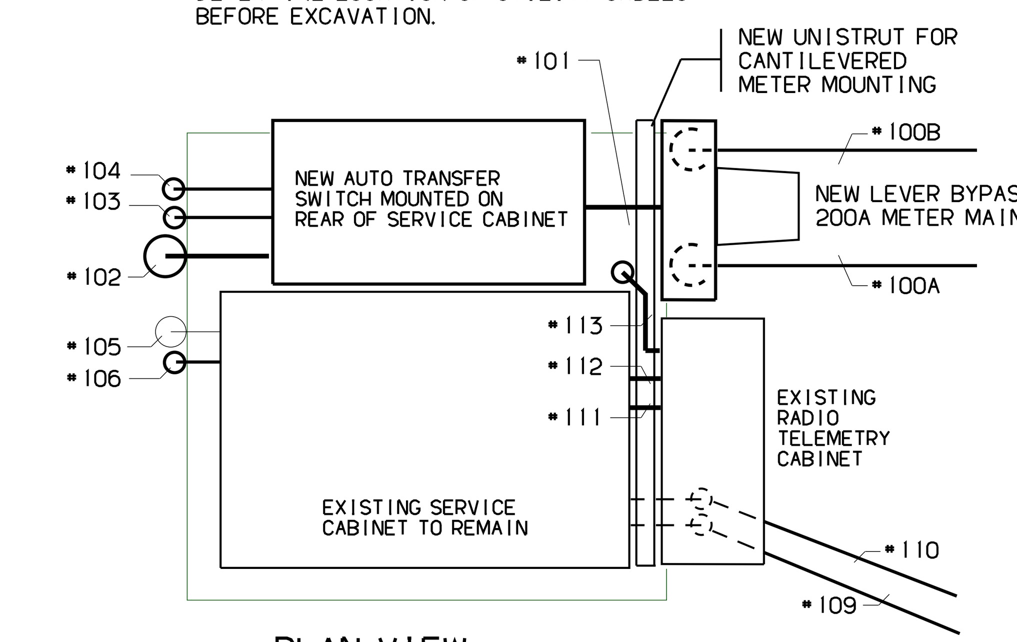

PLAN VIEW

2/E3 BABSON CREEK ELECTRIC SERVICE CABINET ELEVATIONS & PLAN VIEW
SCALE 3/4"=1'-0"

ABBREVIATIONS

A/C	AIR CONDITIONING	INT	INTERIOR, INTRUSION
AFF	ABOVE FINISHED FLR	JAN	JANITOR
APD	AIR PRESSURE DROP	K	RELAY CONTACTOR
APPROX	APPROXIMATELY	KCMILS	1000 CIRCULAR MILS
ATC	AUTO TEMP CONTROLS	KW	KILOWATTS
ATS	AUTO TRANSFER SWITCH	KWH	KILOWATT HOURS
BLDG	BUILDING	LA	LEAVING AIR
BMS	BLDG MANAGEMENT SYSTEM	LPS	LOW PRESSURE SODIUM
BOT	BOTTOM	LPS	LOW PRESSURE STEAM
BTU	BRITISH THERMAL UNIT	LT	LIGHT
C	CONDENSATE	LW	LEAVING WATER
CAB	CABINET HEATER	M	MOTOR, MAGNETIC FLOW
CFM	CUBIC FEET/MINUTE	MAG	MAGNETIC STARTER
CHW	CHILLED WATER	MBH	1000 BRITISH THERMAL UNITS
CHWC	CHW COIL	MCA	MAIN CIRCUIT AMPACITY
CHWR	CHW RETURN	MCC	MOTOR CONTROL CENTER
CHWS	CHW SUPPLY	MDP	MAIN DISTRIBUTION PANEL
CIR	CIRCUIT	MECH	MECHANICAL
CONC	CONCRETE	MFR	MANUFACTURER
COND	CONDENSATE	MH	METAL HALIDE
CMU	CONC MASONRY UNIT	MTD	MOUNTED
CR	CONTROL RELAY	N	NORTH
CTR	CENTER	NEC	NATIONAL ELEC CODE
CTRL	CONTROL	NIC	NOT IN CONTRACT
CU	COPPER	NO.	NUMBER
CU	CONDENSING UNIT	N.C.	NORMALLY CLOSED
CW	COLD WATER	N.O.	NORMALLY OPEN
D	DIMMER	NTS	NOT TO SCALE
DB	DRYBULB	OC	ON CENTER
DDC	DIRECT DIGITAL CONTROLS	O/L	OVERLOAD
DET	DETECTOR	P	POWER PANEL, PUMP
DIA	DIAMETER	PC	PHOTO CELL SWITCH
DISC	DISCONNECT	PF	POWER FACTOR
DWG	DRAWING	PH	PREHEAT
E	EAST, ELECTRIC	PHC	PREHEAT COIL
EA	ENTERING AIR	PSI	POUNDS PER SQUARE INCH
EF	EXHAUST FAN	PSIG	PSI GAGE
EFF	EXHAUST FAN	PUL	MANUAL FIRE PULL STATION
EER C	EXHAUST FAN	R	RETURN
EER H	EXHAUST FAN	RD	ROOF DRAIN
ELEC	ELECTRICAL	REC	RECEPTACLE
EMT	ELEC METALLIC TUBING	REL	MAGNETIC DOOR RELEASE
EQUIP	EQUIPMENT	REQ'D	REQUIRED
EW	ENTERING WATER	RH	REHEAT COIL
EXIST	EXISTING	RM	ROOM
EXT	EXTERIOR	S	SOUTH, SUPPLY, SWITCH
F	FILTER, FUEL OIL	SD	STORM DRAIN
FCO	FLOOR CLEAN OUT	SEER	SEASONAL EFFICIENCY RATIO
FCU	FAN COIL UNIT	SF	SUPPLY FAN
FD	FLOOR DRAIN	SP	STATIC PRESSURE
FLA	FULL LOAD AMPS	SPD	SURGE PROTECTIVE DEVICE
FLR	FLOOR	SPEC	SPECIFICATIONS
FLUOR	FLUORESCENT	SS	STAINLESS STEEL
FS	FLOW SWITCH	SSR	SURGE SUPPRESSED RECEPTACLE
G	GAS	T	THERMOSTAT
GA	GAGE	TBR	TO BE REMOVED
GAL	GALLON	TC	TEMPERATURE CONTROLLER
GALV	GALVANIZED	TEL	TELEPHONE
GEN	GENERATOR	TELEM	TELEMETRY
GFI	GND FAULT INTERRUPTER	TEMP	TEMPERATURE
GND	GROUND	TEMP	TEMPORARY
GPM	GYPSUM WALL BOARD	TOS	TOP OF SLAB
GRS	GALV RIGID STEEL	TS	TEMPERATURE SENSOR
GWB	GALLONS PER MINUTE	TYP	TYPICAL
H	HUMIDISTAT	UH	UNIT HEATER
HP	HORSE POWER	UPS	UNINTERRUPTIBLE POWER SUPPLY
HPS	HIGH PRESSURE SODIUM	VAV	VARIABLE AIR VOLUME
HPS	HIGH PRESSURE STEAM	VDT	VIDEO DISPLAY TERMINAL
HM	HUMIDIFIER	VFD	VARIABLE FREQUENCY DRIVE
HR	HEAT RECOVERY, HOUR	VTR	VENT TO ROOF
HS	HUMIDITY SENSOR	W	WEST
HSPR	HEATING SEASONAL PERFORMANCE	WB	WET BULB
HVAC	HEATING, VENTILATING, A/C	WC	WATER CLOSET
HV	HEATING & VENTILATION	WCO	WALL CLEAN OUT
HWL	HEAT WHEEL	WP	WEATHER PROOF
HW	DOMESTIC HOT WATER	WPD	WATER PRESSURE DROP
HWR	HOT WATER RETURN	WR	WATER RESISTANT
HZ	HERTZ	Ø	PHASE
INCAN	INCANDESCENT	⌀	ROUND
		⌀	SQUARE

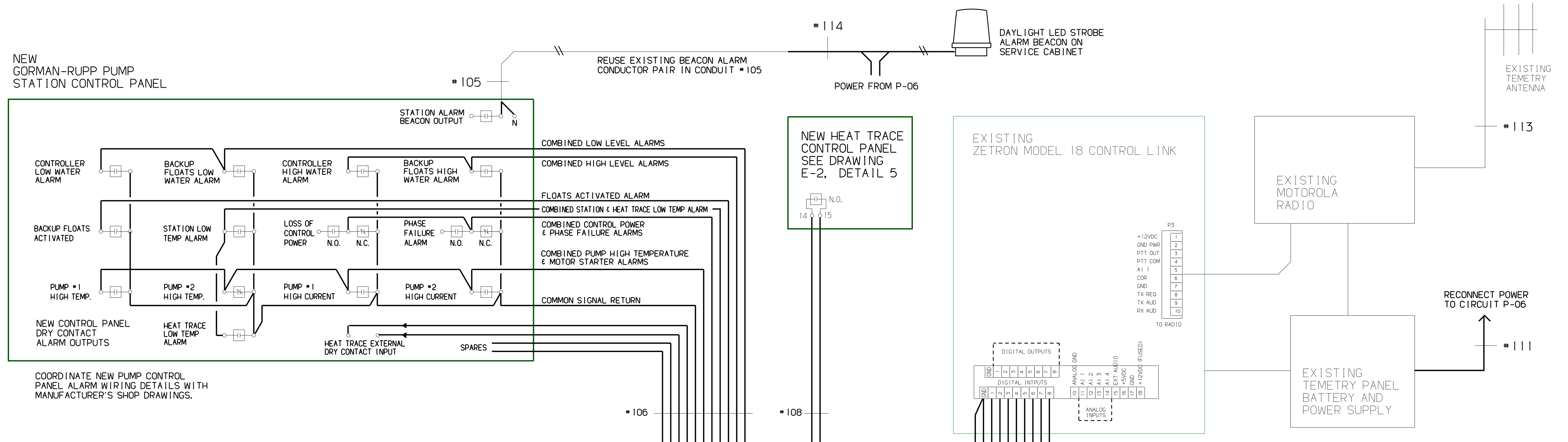

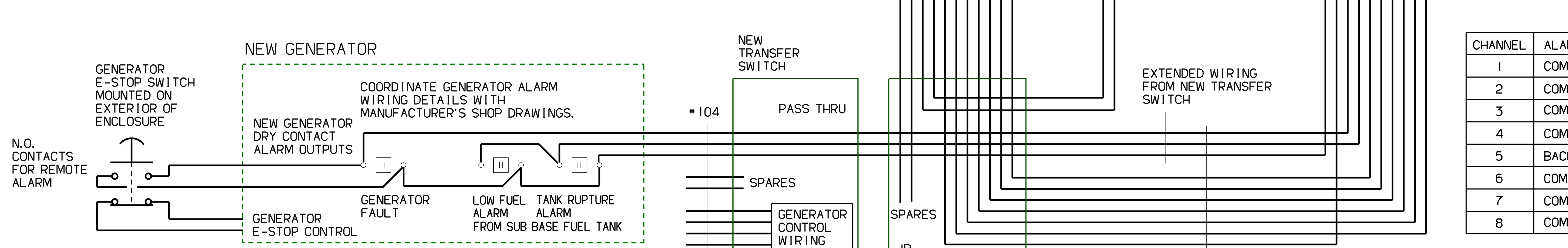

CONDUIT CONTAINS ALARM SIGNALS, 2 SPARES AND GENERATOR AUTO TRANSFER SWITCH CONTROL SIGNALS SEE DRAWING E-1, DETAIL 4.

#107 CONDUITS INSIDE CONTROL CABINET TO RADIO TELEMETRY PANEL

3/E3 ALARM RISER DETAIL
SCALE: NONE

CHANNEL	ALARM DESCRIPTION
1	COMBINED GENERATOR FAULT/E-STOP PUSHED
2	COMBINED GENERATOR LOW FUEL, TANK RUPTURE ALARMS
3	COMBINED WET WELL LOW LEVEL ALARM
4	COMBINED WET WELL HIGH LEVEL ALARMS
5	BACKUP FLOATS ACTIVATED
6	COMBINED STATION & HEAT TRACE LOW TEMPERATURE ALARM
7	COMBINED CONTROL POWER & PHASE FAILURE ALARMS
8	COMBINED PUMP HIGH TEMP & MOTOR STARTER ALARMS

PROVIDE PROGRAMMING & ANY WIRING CHANGES NECESSARY AT SOMESVILLE WASTE WATER TREATMENT FACILITY RADIO TELEMETRY.

PROGRAM EXISTING INDUSTRIAL ALARM PROCESSOR DIALER WITH NEW ALARM MESSAGES.

4/E3 RADIO TELEMETRY ALARM SCHEDULE
SCALE: NONE
PUMP STATION

LANPHER ASSOCIATES, INC.
DESIGN AND CONSULTING ENGINEERS
BOX 472, ONE SUMMIT ROAD
NORTHEAST HARBOR, MAINE 04662
TEL (207)276-5350 FAX 276-4067

OLVER ASSOCIATES INC.
ENVIRONMENTAL ENGINEERS
290 MAIN STREET
WINTERPORT, MAINE

STATE OF MAINE
DWIGHT MARTIN LANPHER
5387
LICENSED PROFESSIONAL ENGINEER

PROJECT NO.: 023515.00

DATE	ADDITION OR REVISION

DES.BY: DML | DR.BY: DML | CK.BY: EH
SCALE: AS NOTED | OA PROJECT NO.: 2193 | LA 2024-007
DATE: AUGUST, 2024 | SHEET: E-3

TOWN OF MOUNT DESERT, MAINE
MOUNT DESERT BABSON BRIDGE SEWER REPLACEMENT

PUMP STATION SERVICE CABINET DETAILS & TELEMETRY RISER

SHEET NUMBER
E-3