STATE OF MAINE
DEPARTMENT OF TRANSPORTATION

NORWAY
OXFORD COUNTY
TANNERY BROOK BRIDGE
OVER
TANNERY BROOK
STATE ROUTE 117/118
FEDERAL AID PROJECT NO. 2311600
BRIDGE NO. 3610

SPECIFICATIONS

Design: Load and Resistance Factor Design per AASHTO LRFD Bridge Design Specifications, 9th Edition 2020.

DESIGN LOADING

Live Load ..... HL - 93 Modified for Strength 1

TRAFFIC DATA

Current (2022) AADT	11,150
Future (2044) AADT	12,390
DHV - % of AADT	10%
Design Hour Volume	1,239
Heavy Trucks (% of AADT)	6%
Heavy Trucks (% of DHV)	3%
Directional Distribution (% of DHV)	54%
18 kip Equivalent P 2.0	353
18 kip Equivalent P 2.5	337
Design Speed (mph)	25 mph

HYDROLOGIC DATA

Drainage Area	7.3 sq mi
Design Discharge (Q50)	626.5 cfs
Check Discharge (Q100)	734.2 cfs
Headwater Elevation (Q50)	374.8 ft
Headwater Elevation (Q100)	375.3 ft
Discharge Velocity (Q50)	6.3 fps
Discharge Velocity (Q100)	6.8 fps

MATERIALS

Concrete:
- Barriers & Sidewalks ..... Class "LP"
- Precast ..... Class "P"
- All Other ..... Class "A"

Reinforcing Steel:
- Deck, Abutment, Sidewalk on bridge, & Barrier ..... ASTM A 1035, Grade 100
- All Other ..... ASTM A 615/A 615M, Grade 60

BASIC DESIGN STRESSES

Concrete:
- Class "A" ..... f 'c = 4,000 psi
- Class "LP" ..... f 'c = 5,000 psi
- Class "P" ..... f 'c = 8,000 psi
- f 'ci = 6,000 psi

Reinforcing Steel:
- ASTM A 615, Grade 60 ..... f y = 60,000 psi
- ASTM A 1035, Grade 100 ..... f y =100,000 psi

LIST OF DRAWINGS

Title Sheet	1
Estimated Quantities and General Notes	2
General Plan	3
Profile	4
Boring Location Plan	5
Generalized Soil Profile	6
Boring Logs	7-8
Pedestrian Accommodation Plan	9
Staged Construction	10-11
Curb Geometry and Grading Plan	12
Typical Sections	13
Cross Sections	14-16
Abutment No. 1 Plan and Elevation	17
Abutment No. 2 Plan and Elevation	18
Abutment Typical Sections	19
Abutment No. 1 Reinforcement	20
Abutment No. 2 Reinforcement	21
Abutment Details	22
Abutment Removal Limits	23
Wingwall Details	24-25
Precast Slab Details	26
Transverse Section	27
Superstructure Plan	28
Superstructure Details	29
Reinforcement Schedule	30
Right of Way Map	31

MAINTENANCE OF TRAFFIC

Maintain two 11'-0" wide lanes of traffic and one 4'-0" wide sidewalk.

UTILITIES

Central Maine Power Company, Charter Communications, Consolidated Communications of Northern New England, Norway Wastewater, Norway Water District, Town of Norway, Firstlight.

TYLin

PROJECT LOCATION:	Main Street - Route 117/ Tannery Brook Bridge (#3610) over the Tannery Brook. Located 0.15 Miles Westerly of Junction Route 118 in Norway, Maine. Latitude 44° 12' 44 N" Longitude 70° 32' 15 W"
OUTLINE OF WORK:	Bridge Replacement

STATE OF MAINE
DEPARTMENT OF TRANSPORTATION

APPROVED

	DATE
COMMISSIONER:	11-21-23
CHIEF ENGINEER:	11-21-2023

STATE OF MAINE · DANIEL S. MYERS No. 12572 · LICENSED PROFESSIONAL ENGINEER

SIGNATURE 12572
P.E. NUMBER
DATE 10/26/23

PROJECT INFORMATION

PROGRAM	BRIDGE
PROJECT MANAGER	JULIE BRASK
DESIGNER	DANIEL MYERS
CONSULTANT	T.Y. LIN INTERNATIONAL
PROJECT RESIDENT	
CONTRACTOR	
PROJECT COMPLETION DATE	

TANNERY BROOK BRIDGE
OVER TANNERY BROOK
NORWAY OXFORD COUNTY

TITLE SHEET

WIN 023116.00
2311600

SHEET NUMBER
1
OF 31

Filename:\00\BRIDGE\MSTA\001_Title.dgn Division: HIGHWAY Username: Date:11/8/2023

ESTIMATED QUANTITIES			
ITEM NO.	DESCRIPTION	QUANTITY	UNIT
201.23	Removing Single Tree Top Only	4	EA
201.24	Removing Stump	4	EA
202.19	Removing Existing Bridge (130 CY)	1	LS
202.202	Removing Pavement Surface	150	SY
203.20	Common Excavation	210	CY
203.2318	Disposal of Dredge Material	50	TON
203.25	Granular Borrow	50	CY
203.33	Special Fill - Streambed Material	25	CY
206.082	Structural Earth Excavation - Major Structures, Plan Quantity	75	CY
304.10	Aggregate Subbase Course - Gravel	400	CY
403.2081	Hot Mix Asphalt - 12.5 mm Nominal Maximum Size (Polymer Modified)	60	TON
403.209	Hot Mix Asphalt - 9.5 mm (sidewalks, drives, & incidentals)	10	TON
403.2131	Hot Mix Asphalt - 12.5 mm (base and intermediate base course, Polymer Modified)	120	TON
409.15	Bituminous Tack Coat, Applied	38	G
461.131	Temporary Pavement	125	TON
501.221	Spun Pipe Piles	480	LF
501.805	Drilling Equipment Mobilization, Spun Pipe Piles	1	LS
502.219	Structural Concrete, Abutments and Retaining Walls (31 CY)	1	LS
502.261	Structural Concrete Roadway and Sidewalk Slab on Concrete Bridges (37 CY)	1	LS
502.31	Structural Concrete Approach Slab (16 CY)	1	LS
502.49	Structural Concrete Curbs And Sidewalks (18 CY)	1	LS
502.565	Concrete Fill	3	CY
503.12	Reinforcing Steel, Fabricated and Delivered	4,100	LB
503.13	Reinforcing Steel, Placing	4,100	LB
503.19	Low-Carbon Chromium Reinforcement, Fabricated and Delivered	25,800	LB
503.20	Low-Carbon Chromium Reinforcement, Placing	25,800	LB
508.14	High Performance Waterproofing Membrane (215 SY)	1	LS
510.11	Special Detour, Pedestrian Traffic Only	1	LS
511.07	Cofferdam - Downstream	1	LS
511.07	Cofferdam - Upstream	1	LS
515.21	Protective Coating for Concrete Surfaces (130 SY)	1	LS
517.62	Shotcrete Abutment Facing	1,180	SF
524.301	Temporary Structural Support	1	LS
526.301	Portable Concrete Barrier Type I (130 LF)	1	LS
526.304	Portable Concrete Barrier, Anchored Type I (60 LF)	1	LS
526.323	Texas Classic Rail (57 LF)	1	LS
527.34	Work Zone Crash Cushions	4	Unit
535.60	Prestressed Structural Concrete Slab (65 CY)	1	LS
604.18	Adjusting Manhole or Catch Basin to Grade	6	EA
606.51	Multiple Mailbox Support	1	EA
607.39	Pedestrian Fence	20	LF
608.08	Reinforced Concrete Sidewalk	330	SY
608.10	Brick Sidewalk (Remove and Rebuild)	5	SY
608.26	Curb Ramp Detectable Warning Field	30	SF
609.11	Vertical Curb Type I	200	LF
609.13	Vertical Bridge Curb Type I	57	LF
609.237	Terminal Curb Type I - 7 Foot	5	EA
609.2371	Terminal Curb Type I - 7 Foot - Circular	2	EA
610.08	Plain Riprap	10	CY
615.07	Loam	20	CY
618.13	Seeding Method Number I	1	Unit
619.12	Mulch	1	Unit
619.16	Wood Chip Mulch	1	CY
621.273	Deciduous Trees 2" - 2½" Cal. Group A B&B	1	EA
627.733	4" White or Yellow Painted Pavement Marking Line	480	LF
627.75	White or Yellow Pavement & Curb Marking	90	SF
627.78	Temporary 4" Painted Pavement Marking Line, White or Yellow	4,000	LF
629.05	Hand Labor, Straight Time	20	HR
631.10	Air Compressor (including operator)	10	HR
631.11	Air Tool (including operator)	10	HR
631.12	All Purpose Excavator (including operator)	10	HR
631.172	Truck - large (including operator)	10	HR
639.18	Field Office, Type A	1	EA
642.13	Wooden Ramp, Permanent	1	EA
642.13	Wooden Ramp, Temporary	1	EA
645.271	Regulatory, Warning, Confirmation and Route Assembly Sign, Type I	2	SF
645.51	Special Signing, WOXO Lighted Sign	1	LS
652.311	Type II Barricade	2	EA
652.312	Type III Barricades	6	EA
652.33	Drum	20	EA
652.34	Cone	25	EA
652.35	Construction Signs	750	SF
652.361	Maintenance of Traffic Control Devices	1	LS
652.38	Flaggers	400	HR
652.41	Portable Changeable Message Sign	2	EA
656.75	Temporary Soil Erosion And Water Pollution Control	1	LS
659.10	Mobilization	1	LS

GENERAL CONSTRUCTION NOTES

1. For easements, construction limits, and right of way lines, refer to the Right of Way Map.

2. The clearing limits as shown on the plans are approximate. The exact limits will be established in the field by the Resident. Payment for clearing will be considered incidental to Contract items.

3. Except for portions specified to remain or to become property of the Town, the existing ridge shall be removed by and become the property of the Contractor.

4. All utility facilities shall be adjusted by the respective utilities unless otherwise noted.

5. Existing signs within the Project limits shall be removed and reset as directed by the Resident. Payment for removal and re-installation of existing signs will be considered incidental to the Contract. No separate payment will be made.

6. Do not excavate for Aggregate Subbase Course where existing material is suitable as determined by the Resident.

7. In areas where the Resident directs the Contractor not to excavate to the subgrade line shown on the plans, payment for removing existing pavement, grubbing, shaping, ditching, and compacting the existing subbase and layers of new subbase 6 inches or less thick will be made under appropriate equipment rental items.

8. Place loam 2 inches deep on all new or reconstructed sideslopes or as directed by the Resident.

9. Place a 24 inch wide strip of Erosion Control Blanket on the sideslopes along the top of the riprap and behind the wingwalls.

10. Protective Coating for Concrete Surfaces shall be applied to the following areas:

    All exposed surfaces of concrete curbs and sidewalks.
    Fascias down to the drip notch.
    Concrete barrier railing.

11. Project information referred to below may be accessed at the following MaineDOT web address: http://www.maine.gov/mdot/contractors/

12. The existing bridge plans may be accessed at the MaineDOT web address. The plans are reproductions of the original drawings as prepared for the construction of the bridge. It is very unlikely that the plans will show any construction field changes or any alterations which may have been made to the bridge during its life span.

13. Reports on hydrology and/or hydraulics applicable to the bridge site may be accessed at the MaineDOT web address. The reports are based on MaineDOT's interpretation of the information obtained for the subject site. No assurance is given that the information or the conclusions of the report will be representative of actual conditions at the time of construction.

14. The project geotechnical report titled: Final Geotechnical Design Report, Tannery Brook Bridge (*3610) Replacement, Norway, Maine dated September 2023 may be accessed at the MaineDOT web address.

15. Geotechnical information furnished or referred to in this plan set is for the use of the Bidders and the Contractor. No assurance is given that the information or interpretations will be representative of actual subsurface conditions at the construction site. MaineDOT will not be responsible for the Bidders' or Contractor's interpretations of, or conclusions drawn from, the geotechnical information. The boring logs contained in the plan set present factual and interpretive subsurface information collected at discrete locations. Data provided may not be representative of the subsurface conditions between the boring locations.

16. Quantities included for pay items measured and paid for by Lump Sum are estimated quantities and are provided by MaineDOT for informational purposes only. Lump Sum pay items will be paid for at the Contract Bid amount, with no addition or reduction in payment to the Contractor if the actual final quantities are different from the MaineDOT provided estimated quantities, except as follows:

    a. If a Lump Sum pay item is eliminated, the requirements of Standard Specifications Section 109.2, Elimination of Items, will take precedence.

    b. If other Contract Documents specifically allow a change in payment for a Lump Sum pay item, those requirements will be followed.

    c. If a design change results in changes to estimated quantities for Lump Sum pay items, price adjustments will be made in accordance with Standard Specifications Section 109.7, Equitable Adjustments to Compensation and Time.

17. Spun Pipe Piles may be installed prior to any excavation or removal of the existing bridge commences. The Contractor shall submit a Spun Pipe Pile Installation Plan to the Resident at least 10 business days prior to the start of the Spun Pipe Pile Installation. No work related to the installation of the Spun Pipe Piles shall be undertaken by the Contractor until MaineDOT has reviewed the Spun Pipe Pile Installation Plan for appropriateness and completeness. Payment for all work necessary for developing, submitting and finalizing the Spun Pipe Pile Installation Plan will be considered incidental to the Spun Pipe Pile pay item. Piles shall be cut off at least 12" below grade and covered with at least 6" of temporary pavement.

18. Due to the proximity of adjacent buildings to the existing bridge, the Contractor shall submit a Bridge Demolition Plan to the Resident at least 10 business days prior to the start of demolition work. The plan shall outline the methods and equipment to be used to remove and dispose of all materials included in the existing bridge. No work related to the removal of the bridge shall be undertaken by the Contractor until MaineDOT has reviewed the Bridge Demolition Plan for appropriateness and completeness. Payment for all work necessary for developing, submitting and finalizing the Demolition Plan will be considered incidental to the bridge removal pay item.

19. Excavated streambed dredge material may be beneficially reused as Special Fill - Streambed Material, as approved by the Resident.

TYLin

STATE OF MAINE
DEPARTMENT OF TRANSPORTATION

2311600

WIN 023116.00

BRIDGE NO. 3610

STATE OF MAINE DANIEL S. MYERS No. 12572 LICENSED PROFESSIONAL ENGINEER

SIGNATURE 12572 P.E. NUMBER

10/26/23 DATE

PROJ. MANAGER	JULIE BRASK	BY	DATE
DESIGN-DETAILED	D. Myers	S. Morgan	6/2023
CHECKED-REVIEWED	B. Toothaker	D. Myers	6/2023
DESIGN2-DETAILED2			
DESIGN3-DETAILED3			
REVISIONS 1			
REVISIONS 2			
REVISIONS 3			
REVISIONS 4			
FIELD CHANGES			

TANNERY BROOK BRIDGE
OVER TANNERY BROOK
NORWAY OXFORD COUNTY

ESTIMATED QUANTITIES
AND GENERAL NOTES

SHEET NUMBER
2
OF 31

Filename: ...\002_Quantities_General_Notes.dgn Division: HIGHWAY Username: Date:11/14/2023

CURVE DATA #1
PI = 48+72.05
D = 3°08'08.9"
Δ = 5°22'35.3" Lt.
R = 1827.14'
L = 171.45'
T = 85.79'
E = 2.01'
Entrance Bearing = N63°16'09.48"W
PC = 47+86.26

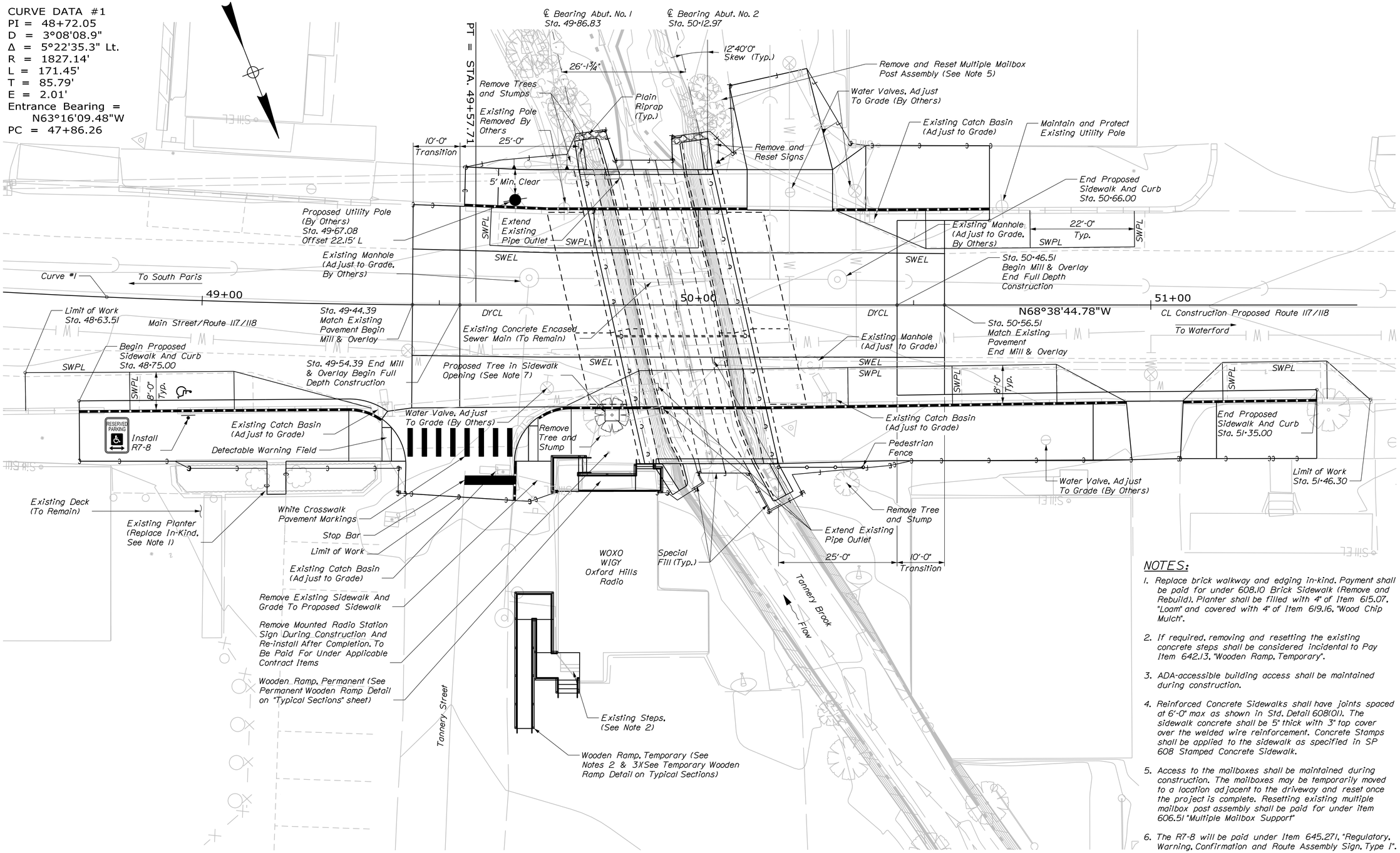

PLAN

10 0 10 20
Scale of Feet

NOTES:

1. Replace brick walkway and edging in-kind. Payment shall be paid for under 608.10 Brick Sidewalk (Remove and Rebuild). Planter shall be filled with 4" of Item 615.07, "Loam" and covered with 4" of Item 619.16, "Wood Chip Mulch".
2. If required, removing and resetting the existing concrete steps shall be considered incidental to Pay Item 642.13, "Wooden Ramp, Temporary".
3. ADA-accessible building access shall be maintained during construction.
4. Reinforced Concrete Sidewalks shall have joints spaced at 6'-0" max as shown in Std. Detail 608(01). The sidewalk concrete shall be 5" thick with 3" top cover over the welded wire reinforcement. Concrete Stamps shall be applied to the sidewalk as specified in SP 608 Stamped Concrete Sidewalk.
5. Access to the mailboxes shall be maintained during construction. The mailboxes may be temporarily moved to a location adjacent to the driveway and reset once the project is complete. Resetting existing multiple mailbox post assembly shall be paid for under item 606.51 "Multiple Mailbox Support"
6. The R7-8 will be paid under Item 645.271, "Regulatory, Warning, Confirmation and Route Assembly Sign, Type 1".
7. The sidewalk opening shall be 3'-0" x 3'-0" and shall be filled to 3" below grade with Item 615.07 "Loam" and be covered with a 3" layer of Item 619.16, "Wood Chip Mulch".

TYLin

STATE OF MAINE
DEPARTMENT OF TRANSPORTATION

2311600

WIN 023116.00

BRIDGE PLANS

BRIDGE NO. 3610

STATE OF MAINE DANIEL S. MYERS No. 12572 LICENSED PROFESSIONAL ENGINEER

SIGNATURE 12572

P.E. NUMBER

DATE 10/26/23

PROJ. MANAGER	JULIE BRASK		
DESIGN-DETAILED	N. Buczek	S. Morgan	12/2022
CHECKED-REVIEWED	S. Davis	D. Myers	12/2022
DESIGN2-DETAILED2			
DESIGN3-DETAILED3			
REVISIONS 1			
REVISIONS 2			
REVISIONS 3			
REVISIONS 4			
FIELD CHANGES			

TANNERY BROOK BRIDGE
OVER TANNERY BROOK
NORWAY OXFORD COUNTY

GENERAL PLAN

SHEET NUMBER
3
OF 31

Filename: ...\BRIDGE\MSTA\003_Gen_Plan.dgn Division: HIGHWAY Username: Date:11/8/2023

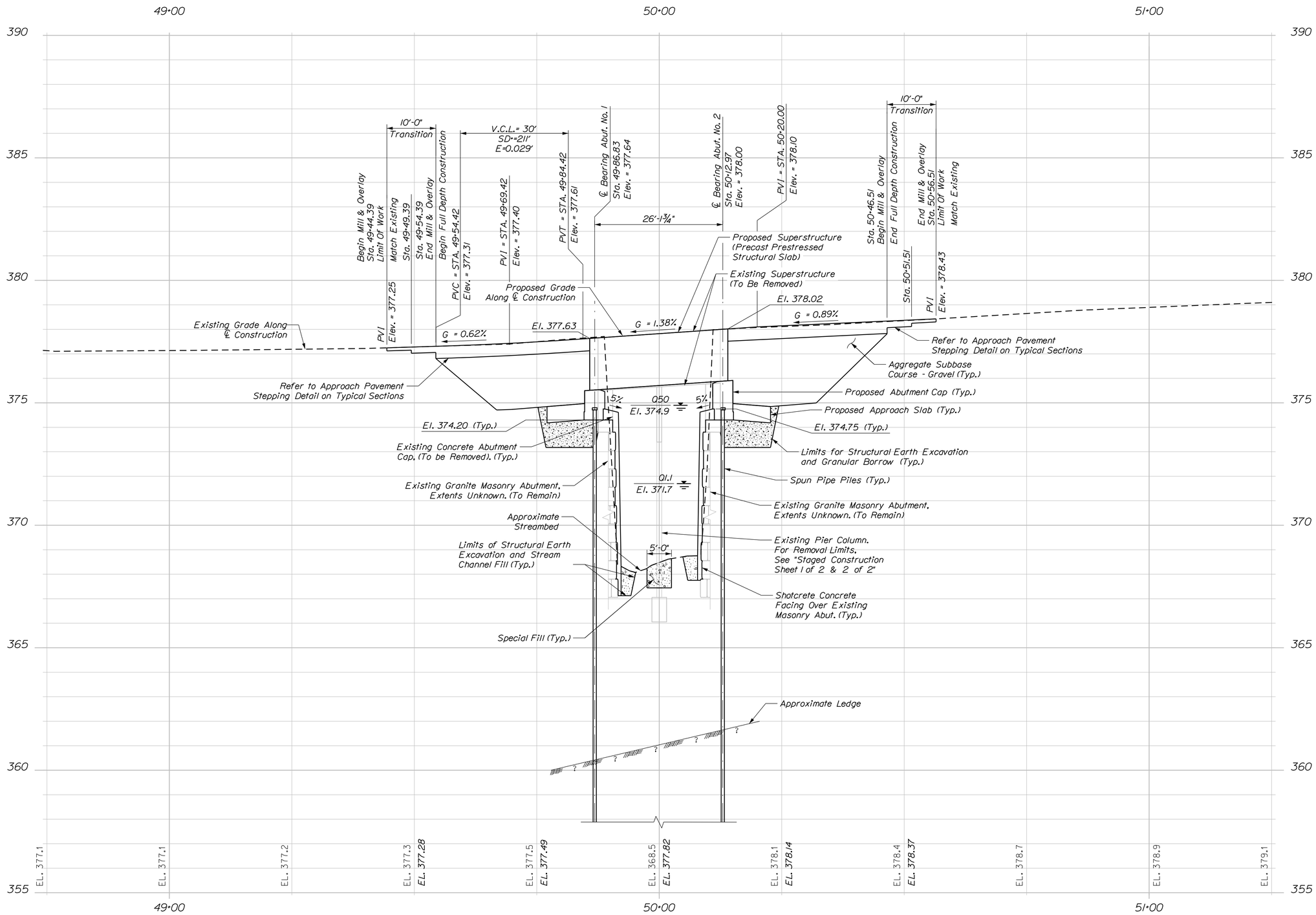

PROFILE

Horiz. 0 5 10 15 20 25

Vert. 0 1 2 3 4 5

Scale of Feet

TYLin

STATE OF MAINE
DEPARTMENT OF TRANSPORTATION

2311600

WIN 023116.00

BRIDGE NO. 3610

BRIDGE PLANS

STATE OF MAINE DANIEL S. MYERS No. 12572 LICENSED PROFESSIONAL ENGINEER

SIGNATURE 12572

P.E. NUMBER

10/26/23

DATE

PROJ. MANAGER	JULIE BRASCH	BY	DATE
DESIGN-DETAILED	N. Buczek	J. Legere	8/2022
CHECKED-REVIEWED	S. Davis	D. Myers	8/2022
DESIGN2-DETAILED2			
DESIGN3-DETAILED3			
REVISIONS 1			
REVISIONS 2			
REVISIONS 3			
REVISIONS 4			
FIELD CHANGES			

TANNERY BROOK BRIDGE
OVER TANNERY BROOK
NORWAY OXFORD COUNTY

PROFILE

SHEET NUMBER

4

OF 31

Filename: ...\HIGHWAY\MSTA\004_Profile.dgn Division: HIGHWAY Username: Date:11/8/2023

BORING PLAN

10 0 10 20

Scale of Feet

KEY:

BB = Bridge Boring

BP = Bridge Probe

LEGEND:

Cased Wash Boring

Solid Stem Auger

NOTES:

1. Borings BB-NTB-101, 102 and probes BP-NTB-101 through 106 performed by New England Boring Contractors between April 12 and April 14, 2022.
2. Supplemental explorations consisting of boring BB-NTB-103 through BB-NTB-106 performed by New England Boring Contractors between May 18 and May 19, 2022.

TYLin

STATE OF MAINE
DEPARTMENT OF TRANSPORTATION

2311600

WIN 023116.00

BRIDGE NO. 3610

BRIDGE PLANS

STATE OF MAINE TODD DOUGLAS BOWEN No. 15817 LICENSED PROFESSIONAL ENGINEER

SIGNATURE 15817

P.E. NUMBER

DATE 10/27/2023

PROJ. MANAGER	JULIE BRASK	BY	DATE
DESIGN-DETAILED	B. Reyes	S. Morgan	8/2022
CHECKED-REVIEWED	T. Dwyer	B. Reyes	8/2022
DESIGN2-DETAILED2			
DESIGN3-DETAILED3			
REVISIONS 1			
REVISIONS 2			
REVISIONS 3			
REVISIONS 4			
FIELD CHANGES			

TANNERY BROOK BRIDGE
OVER TANNERY BROOK
NORWAY OXFORD COUNTY

BORING LOCATION PLAN

SHEET NUMBER

5

OF 31

Filename: ...\005_Boring_Location_Plan.dgn Division: HIGHWAY Username: Date:11/8/2023

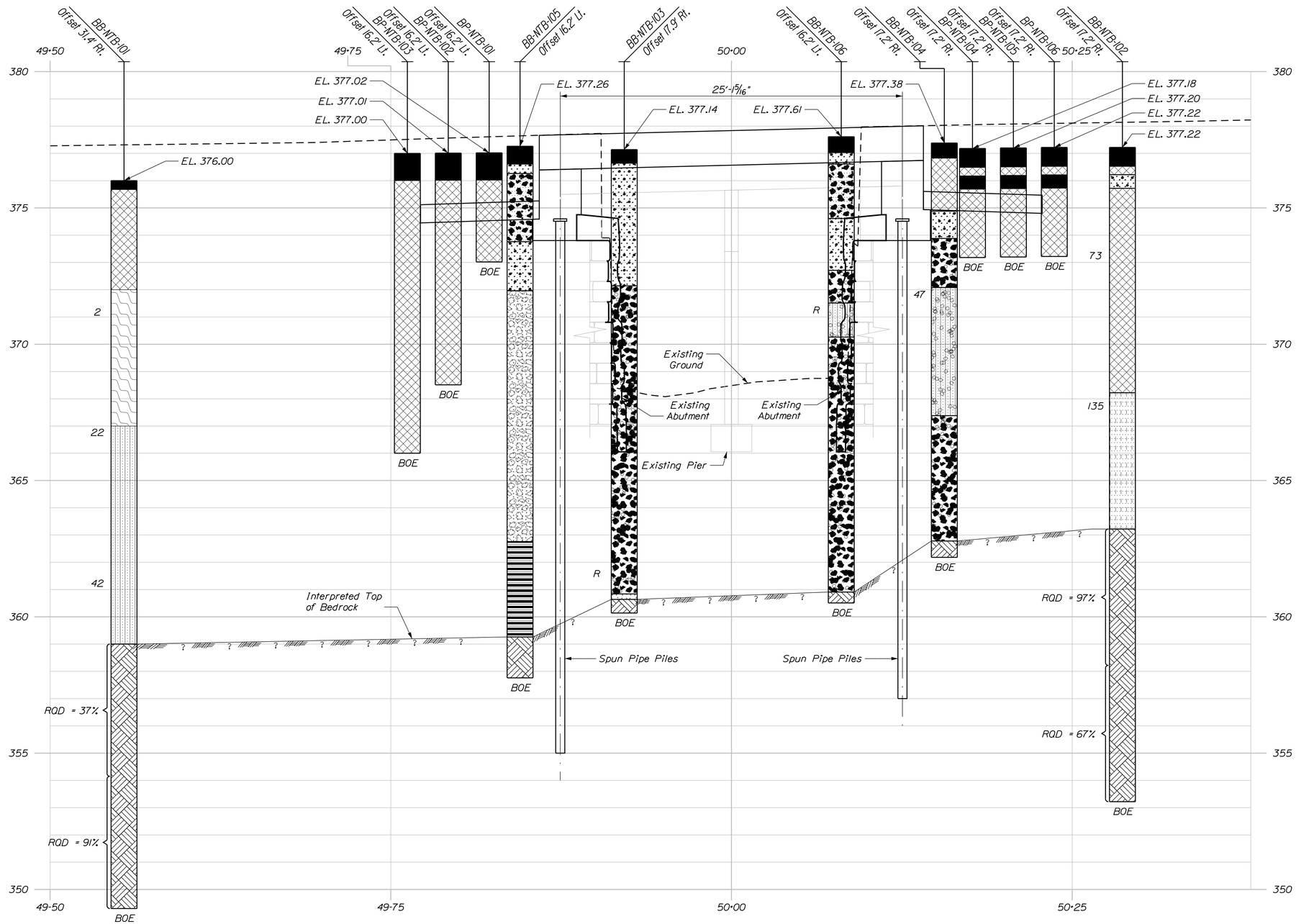

Legend:

Boring No. / Offset, if shown

Pavement Thickness if applicable

6 — Uncorrected SPT N Value (blows/foot) for specified number of inches for penetration between 6" and 18"

WOH — Indicates weight of hammer

R — Split Spoon Refusal (> 50 blows for 1" penetration)

Advancement of core barrel through apparent boulder or till

Interpreted Top of Bedrock

RQD — Rock Quality Designation for Rock Core Sample

BOE — Bottom of Exploration

STRATA SYMBOLS

- Paving
- FILL
- Low Plasticity Organic Silts
- Silty Sand
- Bedrock
- Concrete
- Well graded sand with silt
- Granite and boulders
- Poorly graded sand
- Variable sand and silt mix
- Well graded gravel and sand
- Boulders and cobbles with sand
- Weathered Bedrock

PROFILE - U.S. ROUTE 2

Horiz. 0 2 4 6 8 10

Vert. 0 1 2 3 4 5

Scale of Feet

NOTE:

This generalized interpretive soil profile is intended to convey trends in subsurface conditions. The boundaries between strata are approximate and idealized, and have been developed by interpretations of widely spaced explorations and samples. Actual soil and bedrock transitions may vary and are probably more erratic. For more specific information refer to the exploration logs.

TYLin

STATE OF MAINE
DEPARTMENT OF TRANSPORTATION

2311600

WIN 023116.00

BRIDGE NO. 3610

STATE OF MAINE — TODD DOUGLAS BRYER — No. 15817 — LICENSED PROFESSIONAL ENGINEER

SIGNATURE

P.E. NUMBER 15817

DATE 10/27/2023

		BY	DATE
PROJ. MANAGER	JULIE		
DESIGN-DETAILED	JULIE BRASCH	S. Morgan	8/2022
CHECKED-REVIEWED	B. Reyes	B. Reyes	8/2022
DESIGN2-DETAILED2	T. Dwyer		
DESIGN3-DETAILED3			
REVISIONS 1			
REVISIONS 2			
REVISIONS 3			
REVISIONS 4			
FIELD CHANGES			

TANNERY BROOK BRIDGE
OVER TANNERY BROOK
NORWAY OXFORD COUNTY

GENERALIZED SOIL PROFILE

SHEET NUMBER

6

OF 31

Filename: ...\MSTA\006_Soil Profile_01.dgn Division: HIGHWAY Username: Date:11/8/2023

Maine Department of Transportation — Soil/Rock Exploration Log — US CUSTOMARY UNITS

Project: Tannery Brook Bridge #3610 over Tannery (Bird) Brook
Location: Norway, ME
Boring No.: BB-NTB-101
WIN: 23116.00

Driller:	New England Boring Contractors	Elevation (ft.)	376.00	Auger ID/OD:	N/A
Operator:	Brad / Garret	Datum:	NAVD88	Sampler:	2" SPT
Logged By:	J. Loomis	Rig Type:	Mobile Drill B-53	Hammer Wt./Fall:	140 lbs. / 30 in.
Date Start/Finish:	04/13/21	Drilling Method:	Wash and Drive	Core Barrel:	2.15" (NX)
Boring Location:	N 502678.3573 E 941696.8687	Casing ID/OD:	HW 4" ID 4.5" OD	Water Level*:	8.5 feet
Hammer Efficiency Factor: 0.86		Hammer Type:	Automatic ☒ Hydraulic ☐ Rope & Cathead ☐		

Definitions:
D = Split Spoon Sample
MD = Unsuccessful Split Spoon Sample Attempt
U = Thin Wall Tube Sample
MU = Unsuccessful Thin Wall Tube Sample Attempt
V = Field Vane Shear Test, PP = Pocket Penetrometer
MV = Unsuccessful Field Vane Shear Test Attempt
R = Rock Core Sample
SSA = Solid Stem Auger
HSA = Hollow Stem Auger
RC = Roller Cone
WOH = Weight of 140lb. Hammer
WOR/C = Weight of Rods or Casing
WO1P = Weight of One Person
S_u = Peak/Remolded Field Vane Undrained Shear Strength (psf)
$S_{u(lab)}$ = Lab Vane Undrained Shear Strength (psf)
q_p = Unconfined Compressive Strength (ksf)
N-uncorrected = Raw Field SPT N-value
Hammer Efficiency Factor = Rig Specific Annual Calibration Value
N_{60} = SPT N-uncorrected Corrected for Hammer Efficiency
N_{60} = (Hammer Efficiency Factor/60%)*N-uncorrected
T_v = Torvane Shear Strength (psf)
WC = Water Content, percent
LL = Liquid Limit
PL = Plastic Limit
PI = Plasticity Index
G = Grain Size Analysis
C = Consolidation Test

Depth (ft.)	Sample No.	Pen./Rec. (in.)	Sample Depth (ft.)	Blows (/6 in.) Shear Strength (psf) or RQD (%)	N-uncorrected	N_{60}	Casing Blows	Elevation (ft.)	Graphic Log	Visual Description and Remarks	Laboratory Testing Results/ AASHTO and Unified Class.
0							WD	375.7		4 inches of Asphalt. 0.3	
										Brown, dry, fine to coarse Silty SAND, some non-plastic fines, some cobbles (FILL).	
								372.0		4.0 Dark grey to brown, moist, Organic SILT, non-plastic.	
5	1D	24/16	5.00 - 7.00	1/ 1/ 1/ 1	2	3				Dark brown, moist, soft PEAT.	Organic Content = 95%, Gravel= 15.4%, Sand=83.2%, Fines=1.4%
10	2D	24/10	9.00 - 11.00	11/ 9/ 13/ 30	22	32		367.0		9.0 Light grey, wet, dense, fine to coarse Silty SAND, some non-plastic fines.	
15	3D	24/13	14.00 - 16.00	11/ 18/ 24/ 30	42	60				Similar to 2D, except very dense.	
	R1	60/50	17.00 - 22.00	RQD = 37%			NX	359.0		17.0 Top of BEDROCK at El. 359.0. Light grey to white GRANITE, very hard fresh, (Islesboro Formation). Rock Quality= Poor. Rock Core Rate (min/ft): 2, 2, 1.75, 1.75, 1.75.	
20	R2	60/51	22.00 - 27.00	RQD = 91%						Light grey to white GRANITE, very hard, fresh(Islesboro Formation) Rock Quality= Excellent Rock Core Rate (min/ft): 1.75, 1.75, 1.75, 1.75, 1.25	
25								349.3		26.7 Bottom of Exploration at 26.7 feet below ground surface.	
30											

Remarks:
WD= Wash and Drive.
NX= Core Barrel.
Mobile Drill B-53 SN: D-23.

Stratification lines represent approximate boundaries between soil types; transitions may be gradual.
* Water level readings have been made at times and under conditions stated. Groundwater fluctuations may occur due to conditions other than those present at the time measurements were made.

Page 2 of ??
Boring No.: BB-NTB-101

Maine Department of Transportation — Soil/Rock Exploration Log — US CUSTOMARY UNITS

Project: Tannery Brook Bridge #3610 over Tannery (Bird) Brook
Location: Norway, ME
Boring No.: BB-NTB-102
WIN: 23116.00

Driller:	New England Boring Contractors	Elevation (ft.)	377.22	Auger ID/OD:	N/A
Operator:	Brad / Garret	Datum:	NAVD88	Sampler:	2" SPT
Logged By:	J. Loomis	Rig Type:	Mobile Drill B-53	Hammer Wt./Fall:	140 lbs / 30 inches
Date Start/Finish:	04/14/21	Drilling Method:	Wash and Drive	Core Barrel:	2.15" (NX)
Boring Location:	N 502691.9226 E 941623.5105	Casing ID/OD:	HW 4" ID 4.5" OD	Water Level*:	Not Encountered
Hammer Efficiency Factor: 0.86		Hammer Type:	Automatic ☒ Hydraulic ☐ Rope & Cathead ☐		

Definitions:
D = Split Spoon Sample
MD = Unsuccessful Split Spoon Sample Attempt
U = Thin Wall Tube Sample
MU = Unsuccessful Thin Wall Tube Sample Attempt
V = Field Vane Shear Test, PP = Pocket Penetrometer
MV = Unsuccessful Field Vane Shear Test Attempt
R = Rock Core Sample
SSA = Solid Stem Auger
HSA = Hollow Stem Auger
RC = Roller Cone
WOH = Weight of 140lb. Hammer
WOR/C = Weight of Rods or Casing
WO1P = Weight of One Person
S_u = Peak/Remolded Field Vane Undrained Shear Strength (psf)
$S_{u(lab)}$ = Lab Vane Undrained Shear Strength (psf)
q_p = Unconfined Compressive Strength (ksf)
N-uncorrected = Raw Field SPT N-value
Hammer Efficiency Factor = Rig Specific Annual Calibration Value
N_{60} = SPT N-uncorrected Corrected for Hammer Efficiency
N_{60} = (Hammer Efficiency Factor/60%)*N-uncorrected
T_v = Torvane Shear Strength (psf)
WC = Water Content, percent
LL = Liquid Limit
PL = Plastic Limit
PI = Plasticity Index
G = Grain Size Analysis
C = Consolidation Test

Depth (ft.)	Sample No.	Pen./Rec. (in.)	Sample Depth (ft.)	Blows (/6 in.) Shear Strength (psf) or RQD (%)	N-uncorrected	N_{60}	Casing Blows	Elevation (ft.)	Graphic Log	Visual Description and Remarks	Laboratory Testing Results/ AASHTO and Unified Class.
0							WD	376.5		8 inches of ASPHALT. 0.7	
								376.2		Grey, dry, coarse SAND, poorly-graded (FILL). 1.0	
								375.7		6-inch CONCRETE SLAB. 1.5	
										Grey, dry, coarse SAND, poorly-graded (FILL).	
5	1D	16/4	4.75 - 6.08	1/ 45/ 28/ 5	73	105				Grey, dry, very dense, fine to coarse GRAVEL, few fine to coarse Sand, poorly-graded.	
10	2D	24/11	9.00 - 11.00	32/ 23/ 112/ 50	135	194		368.2		9.0 Grey, dry, very dense, fine to coarse SAND, some fine Gravel, few non-plastic fines, well-graded.	
15	R1	60/60	14.00 - 19.00	RQD = 97%			NX	363.2		14.0 Top of BEDROCK at El. 363.2. Light grey to white GRANITE, very hard fresh, (Islesboro Formation). Rock Quality= Excellent. Rock Core Rate (min/ft): 3.5, 3.5, 3.5, 3.25, 2.5.	
20	R2	60/55	19.00 - 24.00	RQD = 67%						Light grey to white GRANITE, very hard, fresh, (Islesboro Formation). Rock Quality= Fair. Rock Core Rate (min/ft): 2.5, 3.25, 3.25, 3.0, 3.5.	
25								353.2		24.0 Bottom of Exploration at 24.0 feet below ground surface.	

Remarks:
WD= Wash and Drive.
NX= Core Barrel.
Mobile Drill B-53 SN: D-23.

Stratification lines represent approximate boundaries between soil types; transitions may be gradual.
* Water level readings have been made at times and under conditions stated. Groundwater fluctuations may occur due to conditions other than those present at the time measurements were made.

Page 1 of ??
Boring No.: BB-NTB-102

Maine Department of Transportation — Soil/Rock Exploration Log — US CUSTOMARY UNITS

Project: Tannery Brook Bridge #3610 over Tannery (Bird) Brook
Location: Norway, ME
Boring No.: BB-NTB-103
WIN: 23116.00

Driller:	New England Boring Contractors	Elevation (ft.)	377.14	Auger ID/OD:	N/A
Operator:	Sam Cooley	Datum:	NAVD88	Sampler:	2" SPT
Logged By:	R. Munschauer	Rig Type:	Acker Soil Scout	Hammer Wt./Fall:	140 lbs. /30 in.
Date Start/Finish:	5/18/22-5/19/22	Drilling Method:	Wash and Drive	Core Barrel:	2.15" (NX)
Boring Location:	N 502679.1729 E 941657.7734	Casing ID/OD:	HW 4" ID 4.5" OD	Water Level*:	Unable to measure
Hammer Efficiency Factor: 0.6		Hammer Type:	Automatic ☐ Hydraulic ☐ Rope & Cathead ☒		

Definitions:
D = Split Spoon Sample
MD = Unsuccessful Split Spoon Sample Attempt
U = Thin Wall Tube Sample
MU = Unsuccessful Thin Wall Tube Sample Attempt
V = Field Vane Shear Test, PP = Pocket Penetrometer
MV = Unsuccessful Field Vane Shear Test Attempt
R = Rock Core Sample
SSA = Solid Stem Auger
HSA = Hollow Stem Auger
RC = Roller Cone
WOH = Weight of 140lb. Hammer
WOR/C = Weight of Rods or Casing
WO1P = Weight of One Person
S_u = Peak/Remolded Field Vane Undrained Shear Strength (psf)
$S_{u(lab)}$ = Lab Vane Undrained Shear Strength (psf)
q_p = Unconfined Compressive Strength (ksf)
N-uncorrected = Raw Field SPT N-value
Hammer Efficiency Factor = Rig Specific Annual Calibration Value
N_{60} = SPT N-uncorrected Corrected for Hammer Efficiency
N_{60} = (Hammer Efficiency Factor/60%)*N-uncorrected
T_v = Torvane Shear Strength (psf)
WC = Water Content, percent
LL = Liquid Limit
PL = Plastic Limit
PI = Plasticity Index
G = Grain Size Analysis
C = Consolidation Test

Depth (ft.)	Sample No.	Pen./Rec. (in.)	Sample Depth (ft.)	Blows (/6 in.) Shear Strength (psf) or RQD (%)	N-uncorrected	N_{60}	Casing Blows	Elevation (ft.)	Graphic Log	Visual Description and Remarks	Laboratory Testing Results/ AASHTO and Unified Class.
0							WD	376.6		6 inches of Asphalt. 0.5	
										Concrete and Boulders.	
5	R1		5.00 - 7.30				NX	372.1		5.0 Granite & Gabbro Boulders Coring time / ft (min): 2, 2.	
							WD			Advanced from 7.3' to 11.3' with roller bit. Roller bit through strong material from 7.3' to 9'. High drill chatter due to boulders and cobbles.	
10	R2	60/28	11.30 - 16.30				NX			Boulders Coring time / ft (min): 2.25, 2.5, 3, 2, 2.5.	
15	1D	3/3	16.30 - 16.55	50/3"	--		WD	360.8 360.6 360.1		16.3 Light brown to grey, very dense Poorly-graded SAND with Gravel, fine to coarse grained sand, some fine to coarse grained subangular gravel (possible drill wash). Driller indicated no pressure on drill bit - potential soil. 16.5 Top of BEDROCK at El. 360.6 ft. Roller bit action indicated very dense material. Rate of drill 2"/min. 17.0	
20										Bottom of Exploration at 17.0 feet below ground surface.	
25											

Remarks:
Water level unable to be measured since water was introduced at the time of drilling and it did not stabilize at the end of drilling.
WD= Wash and Drive.
NX= Core Barrel.
Acker Soil Scout SN: 0907.

Stratification lines represent approximate boundaries between soil types; transitions may be gradual.
* Water level readings have been made at times and under conditions stated. Groundwater fluctuations may occur due to conditions other than those present at the time measurements were made.

Page 1 of ??
Boring No.: BB-NTB-103

Maine Department of Transportation — Soil/Rock Exploration Log — US CUSTOMARY UNITS

Project: Tannery Brook Bridge #3610 over Tannery (Bird) Brook
Location: Norway, ME
Boring No.: BB-NTB-104
WIN: 23116.00

Driller:	New England Boring Contractors	Elevation (ft.)	377.38	Auger ID/OD:	N/A
Operator:	Sam Cooley	Datum:	NAVD88	Sampler:	2" SPT
Logged By:	R. Munschauer	Rig Type:	Acker Soil Scout	Hammer Wt./Fall:	140 lbs. /30 in.
Date Start/Finish:	5/18/22	Drilling Method:	Wash and Drive	Core Barrel:	2.15" (NX)
Boring Location:	N 502687.3661 E 941635.7583	Casing ID/OD:	HW 4" ID 4.5" OD	Water Level*:	Unable to measure
Hammer Efficiency Factor: 0.6		Hammer Type:	Automatic ☐ Hydraulic ☐ Rope & Cathead ☒		

Definitions:
D = Split Spoon Sample
MD = Unsuccessful Split Spoon Sample Attempt
U = Thin Wall Tube Sample
MU = Unsuccessful Thin Wall Tube Sample Attempt
V = Field Vane Shear Test, PP = Pocket Penetrometer
MV = Unsuccessful Field Vane Shear Test Attempt
R = Rock Core Sample
SSA = Solid Stem Auger
HSA = Hollow Stem Auger
RC = Roller Cone
WOH = Weight of 140lb. Hammer
WOR/C = Weight of Rods or Casing
WO1P = Weight of One Person
S_u = Peak/Remolded Field Vane Undrained Shear Strength (psf)
$S_{u(lab)}$ = Lab Vane Undrained Shear Strength (psf)
q_p = Unconfined Compressive Strength (ksf)
N-uncorrected = Raw Field SPT N-value
Hammer Efficiency Factor = Rig Specific Annual Calibration Value
N_{60} = SPT N-uncorrected Corrected for Hammer Efficiency
N_{60} = (Hammer Efficiency Factor/60%)*N-uncorrected
T_v = Torvane Shear Strength (psf)
WC = Water Content, percent
LL = Liquid Limit
PL = Plastic Limit
PI = Plasticity Index
G = Grain Size Analysis
C = Consolidation Test

Depth (ft.)	Sample No.	Pen./Rec. (in.)	Sample Depth (ft.)	Blows (/6 in.) Shear Strength (psf) or RQD (%)	N-uncorrected	N_{60}	Casing Blows	Elevation (ft.)	Graphic Log	Visual Description and Remarks	Laboratory Testing Results/ AASHTO and Unified Class.
0							WD	376.8		7 inches of Asphalt. 0.6	
										Sand Sub-base.	
	R1	34/34	2.50 - 5.33				NX	374.9		2.5 Concrete. Coring time/ft (min): 2, 2, 2.	
								373.9		3.5 Granite and Gabbro Boulders. No mortar observed.	
5	1D	24/0	5.30 - 7.30	10/ 29/ 18/ 12	47	47	WD	372.1		5.3 Very dense, Glacial Outwash with Cobbles SPT sampler seized up. Driller unable to open it. Angular gravel at tip.	
10								367.4		10.0 Boulders. Increased bit chatter indicating harder material.	
										12.5 - 13 - No resistance on tri-cone roller bit.	
										14-14.6 - No resistance on tri-cone roller bit.	
15								362.8 362.2		14.6 Top of BEDROCK at El. 362.8 ft. Rate of drill 1"/3 min. 15.2	
										Bottom of Exploration at 15.2 feet below ground surface.	
20											
25											

Remarks:
Water level unable to be measured since water was introduced at the time of drilling and it did not stabilize at the end of drilling.
WD= Wash and Drive.
NX= Core Barrel.
Acker Soil Scout SN: 0907.

Stratification lines represent approximate boundaries between soil types; transitions may be gradual.
* Water level readings have been made at times and under conditions stated. Groundwater fluctuations may occur due to conditions other than those present at the time measurements were made.

Page 1 of ??
Boring No.: BB-NTB-104

STATE OF MAINE
DEPARTMENT OF TRANSPORTATION
2311600
BRIDGE NO. 3610
WIN 023116.00

STATE OF MAINE TODD DOUGLAS DWYER No. 15817 LICENSED PROFESSIONAL ENGINEER

SIGNATURE
P.E. NUMBER 15817
DATE 10/27/2023

PROJ. MANAGER	JULIE BRASK	BY	DATE
DESIGN-DETAILED	B. Reyes	S. Morgan	7/2022
CHECKED-REVIEWED	T. Dwyer	D. Myers	7/2022
DESIGN2-DETAILED2			
DESIGN3-DETAILED3			
REVISIONS 1			
REVISIONS 2			
REVISIONS 3			
REVISIONS 4			
FIELD CHANGES			

TANNERY BROOK BRIDGE
OVER TANNERY BROOK
NORWAY OXFORD COUNTY

BORING LOGS

TYLin

Filename: ...\MSTA\007-008_BoringLogs_01.dgn Division: HIGHWAY Username: Date:11/8/2023

Maine Department of Transportation — Soil/Rock Exploration Log — US CUSTOMARY UNITS

Project: Tannery Brook Bridge #3610 over Tannery (Bird) Brook, Location: Norway, ME

Boring No.: BB-NTB-105	WIN: 23116.00
Driller: New England Boring Contractors	Elevation (ft.) 377.26
Operator: Sam Cooley	Datum: NAVD88
Logged By: R. Munschauer	Rig Type: Acker Soil Scout
Date Start/Finish: 5/19/22 to 5/20/22	Drilling Method: Wash and Drive
Boring Location: N 502644.6882 E 941652.5041	Casing ID/OD: HW 4" ID 4.5" OD
Auger ID/OD: N/A	Sampler: 2" SPT
Hammer Wt./Fall: 140 lbs./30 in.	Core Barrel: 2.15" (NX)
Water Level*: Unable to measure	

Hammer Efficiency Factor: 0.6 — Hammer Type: Automatic ☐ Hydraulic ☐ Rope & Cathead ☒

Definitions: D = Split Spoon Sample; MD = Unsuccessful Split Spoon Sample Attempt; U = Thin Wall Tube Sample; MU = Unsuccessful Thin wall Tube Sample Attempt; V = Field Vane Shear Test, PP = Pocket Penetrometer; MV = Unsuccessful Field Vane Shear Test Attempt; R = Rock Core Sample; SSA = Solid Stem Auger; HSA = Hollow Stem Auger; RC = Roller Cone; WOH = Weight of 140lb. Hammer; WOR/C = Weight of Rods or Casing; WOP = Weight of One Person; S_u = Peak/Remolded Field Vane Undrained Shear Strength (psf); $S_{u(lab)}$ = Lab Vane Undrained Shear Strength (psf); q_p = Unconfined Compressive Strength (ksf); N-uncorrected = Raw Field SPT N-value; Hammer Efficiency Factor = Rig Specific Annual Calibration No.; N_{60} = SPT N-uncorrected Corrected for Hammer Efficiency; N_{60} = (Hammer Efficiency Factor/60%)*N-uncorrected; T_v = Torvane Shear Strength (psf); WC = Water Content, percent; LL = Liquid Limit; PL = Plastic Limit; PI = Plasticity Index; G = Grain Size Analysis; C = Consolidation Test

Depth (ft.)	Sample No.	Pen./Rec. (in.)	Sample Depth (ft.)	Blows (/6 in.) Shear Strength (psf) Qp (tsf)	N-uncorrected	N60	Casing Blows	Elevation (ft.)	Visual Description and Remarks	Laboratory Testing Results/ AASHTO and Unified Class.
0								376.6	8 inches of Asphalt.	
								376.5	Concrete	0.7
									Sand & Grave Sub-base.	1.0
	R1	36/28	3.50 - 6.50				NR	373.5	Concrete.	3.5
5								372.0	Coring time/ft (min): 2, 2, 1.75.	5.3
									Boulders and Cobbles with Sand.	
	R2		9.70 - 10.70							
	R3	60/12	11.00 - 16.00							
10									Decomposed wood encountered. Coring time/ft (min): 4.	
									Coring time/ft (min): 1.75, 2.25, 2.5, 1.5, 1, 1-1.5 - No resistance on tri-cone roller bit.	
									11.5-13.5 - Increase in tri-cone roller bit resistance.	
									13.5-14.5 - No resistance on tri-cone roller bit.	
15								362.8	Weathered Bedrock.	14.5
								359.3	Top of BEDROCK at El. 359.3 ft. Drill rate 2"/min.	18.0
								357.8	Bottom of Exploration at 19.5 feet below ground surface.	19.5
20										
25										

Remarks:
Water level unable to be measured since water was introduced at the time of drilling and it did not stabilize at the end of drilling.
WD- Wash and Drive.
NX- Core Barrel.
Acker Soil Scout SN 0907.

Stratification lines represent approximate boundaries between soil types; transitions may be gradual.
* Water level readings have been made at times and under conditions stated. Groundwater fluctuations may occur due to conditions other than those present at the time measurements were made.

Page 1 of ?? Boring No.: BB-NTB-105

Maine Department of Transportation — Soil/Rock Exploration Log — US CUSTOMARY UNITS

Project: Tannery Brook Bridge #3610 over Tannery (Bird) Brook, Location: Norway, ME

Boring No.: BB-NTB-106	WIN: 23116.00
Driller: New England Boring Contractors	Elevation (ft.) 377.61
Operator: Sam Cooley	Datum: NAVD88
Logged By: R. Munschauer	Rig Type: Acker Soil Scout
Date Start/Finish: 5/19/22	Drilling Method: Wash & Drive
Boring Location: N 502653.2722 E 941630.5488	Casing ID/OD: HW 4" ID 4.5" OD
Auger ID/OD: N/A	Sampler: 2" SPT
Hammer Wt./Fall: 140 lbs./30 in.	Core Barrel: 2.15" (NX)
Water Level*: Unable to measure	

Hammer Efficiency Factor: 0.6 — Hammer Type: Automatic ☐ Hydraulic ☐ Rope & Cathead ☒

Sample No.	Pen./Rec. (in.)	Sample Depth (ft.)	Blows (/6 in.) Shear Strength (psf) Qp (tsf)	N-uncorrected	N60	Casing Blows	Elevation (ft.)	Visual Description and Remarks	Laboratory Testing Results/ AASHTO and Unified Class.
							377.1	7 inches of Asphalt.	0.6
							376.0	Concrete.	1.0
								Sand & Grave Sub-base.	
R1	37/34	3.00 - 6.08				NR	374.0	Concrete. Coring time/ft (min): 2.5, 2.25, 2.5.	3.0
							372.7	Boulders. No mortar observed.	4.9
1D	15/2	6.10 - 7.35	17/ 5/ 50/3"	R		WD	371.1	Dark brown, very dense Silty SAND with Gravel, some fine to coarse grained gravel, little fines.	6.1
							370.3	Boulders. Roller bit down to 16.7'. Increased drill chatter. Boulder.	7.4
R2	54/19	8.00 - 12.50				NR			
							360.5	Top of BEDROCK at El. 360.9 ft. Drill rate 2"/min.	16.7
							360.0	Bottom of Exploration at 17.1 feet below ground surface.	17.1

Remarks:
Water level unable to be measured since water was introduced at the time of drilling and it did not stabilize at the end of drilling.
WD- Wash and Drive.
NX- Core Barrel.
Acker Soil Scout SN 0907.

Stratification lines represent approximate boundaries between soil types; transitions may be gradual.
* Water level readings have been made at times and under conditions stated. Groundwater fluctuations may occur due to conditions other than those present at the time measurements were made.

Page 1 of ?? Boring No.: BB-NTB-106

Maine Department of Transportation — Soil/Rock Exploration Log — US CUSTOMARY UNITS

Project: Tannery Brook Bridge #3610 over Tannery (Bird) Brook, Location: Norway, ME

Boring No.: BP-NTB-101	WIN: 23116.00
Driller: New England Boring Contractors	Elevation (ft.) 377.02
Operator: Brad / Garret	Datum: NAVD88
Logged By: J. Loomis	Rig Type: N/A
Date Start/Finish: 04/13/21	Drilling Method: Vacuum
Boring Location: N 502643.8633 E 941654.6142	Casing ID/OD: N/A
Auger ID/OD: N/A	Sampler: N/A
Hammer Wt./Fall: N/A	Core Barrel: N/A
Water Level*: Not Encountered	

Hammer Efficiency Factor: N/A — Hammer Type: Automatic ☐ Hydraulic ☐ Rope & Cathead ☐

Sample No.	Pen./Rec. (in.)	Sample Depth (ft.)	Blows (/6 in.) Shear Strength (psf) Qp (tsf)	N-uncorrected	N60	Casing Blows	Elevation (ft.)	Visual Description and Remarks	Laboratory Testing Results/ AASHTO and Unified Class.
							376.0	12 inches of ASPHALT.	
								Grey, dry, coarse SAND, trace cobbles, poorly-graded (FILL).	1.0
								Grey, dry, fine Silty SAND, little non plastic fines, trace roots (FILL).	
							373.0	Bottom of Exploration at 4.0 feet below ground surface.	4.0

Remarks:
Top of abutment encountered at 4 feet.
V= Vacuum.

Stratification lines represent approximate boundaries between soil types; transitions may be gradual.
* Water level readings have been made at times and under conditions stated. Groundwater fluctuations may occur due to conditions other than those present at the time measurements were made.

Page 1 of ?? Boring No.: BP-NTB-101

Maine Department of Transportation — Soil/Rock Exploration Log — US CUSTOMARY UNITS

Project: Tannery Brook Bridge #3610 over Tannery (Bird) Brook, Location: Norway, ME

Boring No.: BP-NTB-102	WIN: 23116.00
Driller: New England Boring Contractors	Elevation (ft.) 377.01
Operator: Brad / Garret	Datum: NAVD88
Logged By: J. Loomis	Rig Type: N/A
Date Start/Finish: 04/13/21	Drilling Method: Hollow Stem Auger
Boring Location: N 502642.7445 E 941657.3977	Casing ID/OD: N/A
Auger ID/OD: N/A	Sampler: N/A
Hammer Wt./Fall: N/A	Core Barrel: N/A
Water Level*: Not Encountered	

Hammer Efficiency Factor: N/A — Hammer Type: Automatic ☐ Hydraulic ☐ Rope & Cathead ☐

Sample No.	Pen./Rec. (in.)	Sample Depth (ft.)	Blows (/6 in.) Shear Strength (psf) Qp (tsf)	N-uncorrected	N60	Casing Blows	Elevation (ft.)	Visual Description and Remarks	Laboratory Testing Results/ AASHTO and Unified Class.
							376.0	12 inches of ASPHALT.	
								Grey, dry, coarse SAND, trace cobbles, poorly-graded (FILL).	1.0
								Grey, dry, fine Silty SAND, little non plastic fines, trace roots, trace cobbles (FILL).	
							368.5	Bottom of Exploration at 8.5 feet below ground surface.	8.5

Remarks:
Refusal on possible boulder at 8.5 feet.
V= Vacuum.

Stratification lines represent approximate boundaries between soil types; transitions may be gradual.
* Water level readings have been made at times and under conditions stated. Groundwater fluctuations may occur due to conditions other than those present at the time measurements were made.

Page 1 of ?? Boring No.: BP-NTB-102

Maine Department of Transportation — Soil/Rock Exploration Log — US CUSTOMARY UNITS

Project: Tannery Brook Bridge #3610 over Tannery (Bird) Brook, Location: Norway, ME

Boring No.: BP-NTB-103	WIN: 23116.00
Driller: New England Boring Contractors	Elevation (ft.) 377.00
Operator: Brad / Garret	Datum: NAVD88
Logged By: J. Loomis	Rig Type: N/A
Date Start/Finish: 04/13/21	Drilling Method: Hollow Stem Auger
Boring Location: N 502641.6257 E 941660.1813	Casing ID/OD: N/A
Auger ID/OD: N/A	Sampler: N/A
Hammer Wt./Fall: N/A	Core Barrel: N/A
Water Level*: Not Encountered	

Hammer Efficiency Factor: N/A — Hammer Type: Automatic ☐ Hydraulic ☐ Rope & Cathead ☐

Sample No.	Pen./Rec. (in.)	Sample Depth (ft.)	Blows (/6 in.) Shear Strength (psf) Qp (tsf)	N-uncorrected	N60	Casing Blows	Elevation (ft.)	Visual Description and Remarks	Laboratory Testing Results/ AASHTO and Unified Class.
							376.0	12 inches of ASPHALT.	
								Grey, dry, coarse SAND, trace cobbles, poorly-graded (FILL).	1.0
								Grey, dry, fine Silty SAND, little non plastic fines, trace roots (FILL).	
							366.0	Bottom of Exploration at 11.0 feet below ground surface.	11.0

Remarks:
V= Vacuum

Stratification lines represent approximate boundaries between soil types; transitions may be gradual.
* Water level readings have been made at times and under conditions stated. Groundwater fluctuations may occur due to conditions other than those present at the time measurements were made.

Page 1 of ?? Boring No.: BP-NTB-103

Maine Department of Transportation — Soil/Rock Exploration Log — US CUSTOMARY UNITS

Project: Tannery Brook Bridge #3610 over Tannery (Bird) Brook, Location: Norway, ME

Boring No.: BP-NTB-104	WIN: 23116.00
Driller: New England Boring Contractors	Elevation (ft.) 377.18
Operator: Brad / Garret	Datum: NAVD88
Logged By: J. Loomis	Rig Type: N/A
Date Start/Finish: 04/12/21	Drilling Method: Vacuum
Boring Location: N 502687.3661 E 941635.583	Casing ID/OD: N/A
Auger ID/OD: N/A	Sampler: N/A
Hammer Wt./Fall: N/A	Core Barrel: N/A
Water Level*: Not Encountered	

Hammer Efficiency Factor: N/A — Hammer Type: Automatic ☐ Hydraulic ☐ Rope & Cathead ☐

Sample No.	Pen./Rec. (in.)	Sample Depth (ft.)	Blows (/6 in.) Shear Strength (psf) Qp (tsf)	N-uncorrected	N60	Casing Blows	Elevation (ft.)	Visual Description and Remarks	Laboratory Testing Results/ AASHTO and Unified Class.
							376.2	8 inches of ASPHALT.	
							376.1	Grey, dry, coarse SAND, trace cobbles, trace bricks, poorly-graded.	0.7
							375.2	6 inches of CONCRETE.	1.0
								Grey, dry, coarse SAND, trace cobbles, trace bricks, poorly-graded.	
							373.2	Bottom of Exploration at 4.0 feet below ground surface.	4.0

Remarks:
Top of rubble abutment encountered at 4 feet.
V= Vacuum.

Stratification lines represent approximate boundaries between soil types; transitions may be gradual.
* Water level readings have been made at times and under conditions stated. Groundwater fluctuations may occur due to conditions other than those present at the time measurements were made.

Page 1 of ?? Boring No.: BP-NTB-104

Maine Department of Transportation — Soil/Rock Exploration Log — US CUSTOMARY UNITS

Project: Tannery Brook Bridge #3610 over Tannery (Bird) Brook, Location: Norway, ME

Boring No.: BP-NTB-105	WIN: 23116.00
Driller: New England Boring Contractors	Elevation (ft.) 377.20
Operator: Brad / Garret	Datum: NAVD88
Logged By: J. Loomis	Rig Type: N/A
Date Start/Finish: 04/12/21	Drilling Method: Vacuum
Boring Location: N 502688.9918 E 941630.9543	Casing ID/OD: N/A
Auger ID/OD: N/A	Sampler: N/A
Hammer Wt./Fall: N/A	Core Barrel: N/A
Water Level*: Not Encountered	

Hammer Efficiency Factor: N/A — Hammer Type: Automatic ☐ Hydraulic ☐ Rope & Cathead ☐

Sample No.	Pen./Rec. (in.)	Sample Depth (ft.)	Blows (/6 in.) Shear Strength (psf) Qp (tsf)	N-uncorrected	N60	Casing Blows	Elevation (ft.)	Visual Description and Remarks	Laboratory Testing Results/ AASHTO and Unified Class.
							376.2	8 inches of ASPHALT.	
							376.1	Grey, dry, coarse SAND, trace cobbles, trace bricks, poorly-graded.	0.7
							375.2	6 inches of CONCRETE.	1.0
								Grey, dry, coarse SAND, trace cobbles, trace bricks, poorly-graded.	
							373.2	Bottom of Exploration at 4.0 feet below ground surface.	4.0

Remarks:
Top of rubble abutment encountered at 4 feet.
V= Vacuum.

Stratification lines represent approximate boundaries between soil types; transitions may be gradual.
* Water level readings have been made at times and under conditions stated. Groundwater fluctuations may occur due to conditions other than those present at the time measurements were made.

Page 1 of ?? Boring No.: BP-NTB-105

Maine Department of Transportation — Soil/Rock Exploration Log — US CUSTOMARY UNITS

Project: Tannery Brook Bridge #3610 over Tannery (Bird) Brook, Location: Norway, ME

Boring No.: BP-NTB-106	WIN: 23116.00
Driller: New England Boring Contractors	Elevation (ft.) 377.22
Operator: Brad / Garret	Datum: NAVD88
Logged By: J. Loomis	Rig Type: N/A
Date Start/Finish: 04/12/21	Drilling Method: Vacuum
Boring Location: N 502690.0908 E 941628.1629	Casing ID/OD: N/A
Auger ID/OD: N/A	Sampler: N/A
Hammer Wt./Fall: N/A	Core Barrel: N/A
Water Level*: Not Encountered	

Hammer Efficiency Factor: N/A — Hammer Type: Automatic ☐ Hydraulic ☐ Rope & Cathead ☐

Sample No.	Pen./Rec. (in.)	Sample Depth (ft.)	Blows (/6 in.) Shear Strength (psf) Qp (tsf)	N-uncorrected	N60	Casing Blows	Elevation (ft.)	Visual Description and Remarks	Laboratory Testing Results/ AASHTO and Unified Class.
							376.2	8 inches of ASPHALT.	
							376.1	Grey, dry, coarse SAND, trace cobbles, trace bricks, poorly-graded.	0.7
							375.2	6 inches of CONCRETE.	1.0
								Grey, dry, coarse SAND, trace cobbles, trace bricks, poorly-graded.	
							373.2	Bottom of Exploration at 4.0 feet below ground surface.	4.0

Remarks:
Top of rubble abutment encountered at 4 feet.
V= Vacuum.

Stratification lines represent approximate boundaries between soil types; transitions may be gradual.
* Water level readings have been made at times and under conditions stated. Groundwater fluctuations may occur due to conditions other than those present at the time measurements were made.

Page 1 of ?? Boring No.: BP-NTB-106

STATE OF MAINE
DEPARTMENT OF TRANSPORTATION

2311600

WIN 023116.00

BRIDGE NO. 3610

STATE OF MAINE — TODD DOUGLAS BOYCE — No. 13817 — LICENSED PROFESSIONAL ENGINEER

SIGNATURE

13817
P.E. NUMBER

10/27/2023
DATE

PROJ. MANAGER	JULIE BRACK	BY	DATE
DESIGN-DETAILED	B. Reyes	S. Morgan	7/2022
CHECKED-REVIEWED	T. Dwyer	D. Myers	7/2022
DESIGN2-DETAILED2			
DESIGN3-DETAILED3			
REVISIONS 1			
REVISIONS 2			
REVISIONS 3			
REVISIONS 4			
FIELD CHANGES			

TANNERY BROOK BRIDGE
OVER TANNERY BROOK
NORWAY OXFORD COUNTY

BORING LOGS

TYLin

SHEET NUMBER
8
OF 31

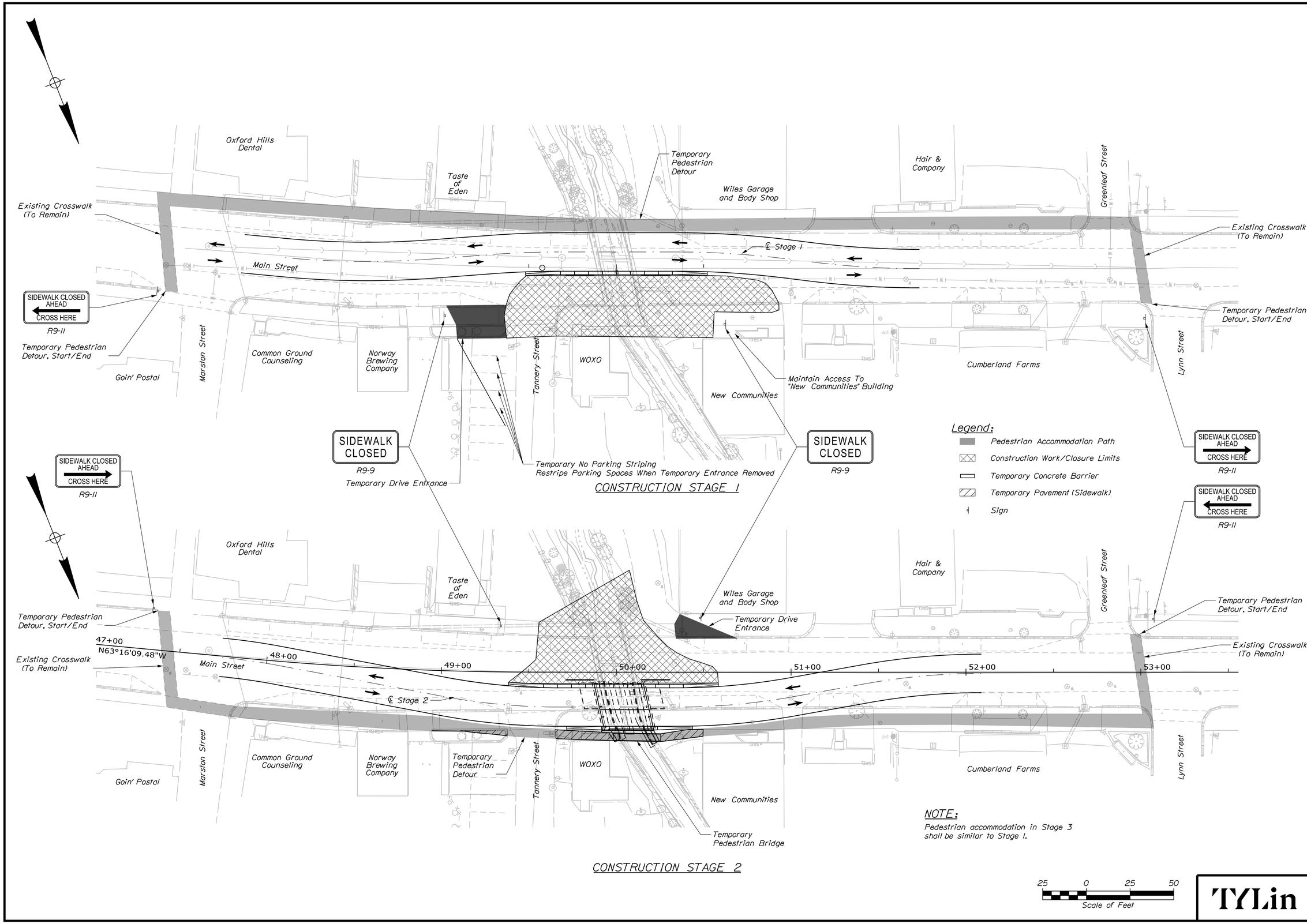

STATE OF MAINE
DEPARTMENT OF TRANSPORTATION

2311600

WIN 023116.00

BRIDGE NO. 3610

BRIDGE PLANS

STATE OF MAINE
DANIEL S. MYERS
No. 12572
LICENSED PROFESSIONAL ENGINEER

P.E. NUMBER 12572
SIGNATURE
10/26/23
DATE

PROJ. MANAGER	JULIE BRASK	BY	DATE
DESIGN-DETAILED	S. Davis	S. Morgan	5/2023
CHECKED-REVIEWED	D. Myers	D. Myers	5/2023
DESIGN2-DETAILED2			
DESIGN3-DETAILED3			
REVISIONS 1			
REVISIONS 2			
REVISIONS 3			
REVISIONS 4			
FIELD CHANGES			

TANNERY BROOK BRIDGE
OVER TANNERY BROOK
NORWAY OXFORD COUNTY

PEDESTRIAN ACCOMMODATION PLAN

SHEET NUMBER
9
OF 31

TYLin

Filename: ...\MSTA\009_Ped_ Accomm_Plan.dgn Division: HIGHWAY Username: Date:11/8/2023

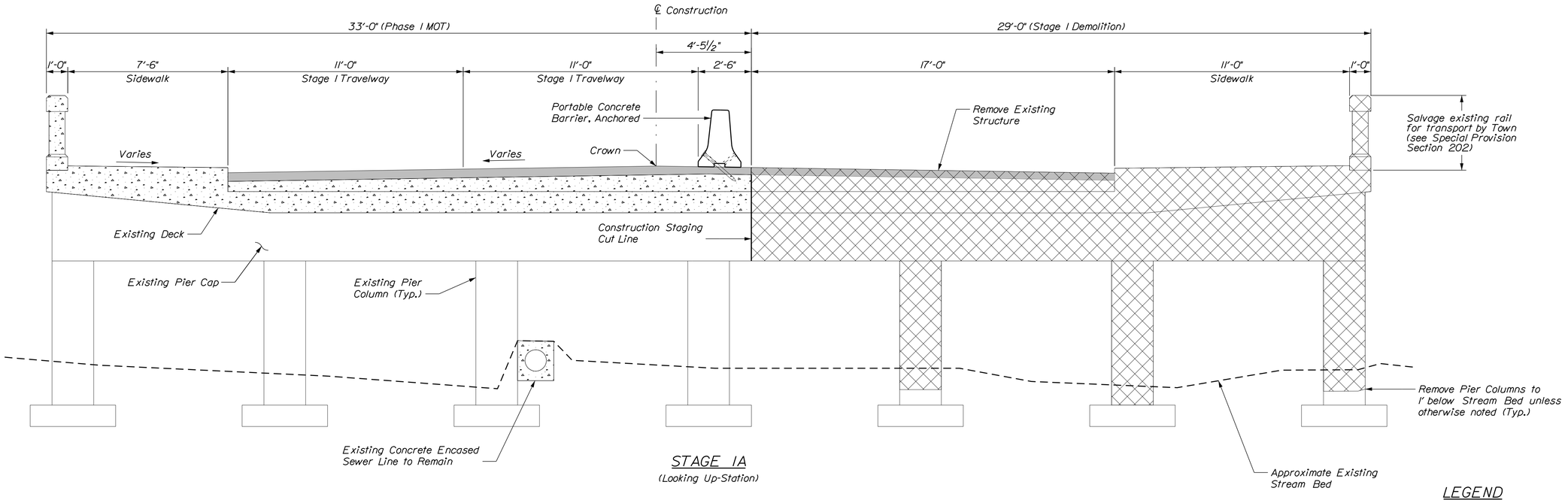

STAGE IA
(Looking Up-Station)

LEGEND

- Precast Slab
- Existing Structure Removal Limits
- Cast-in-place Concrete
- Special Fill

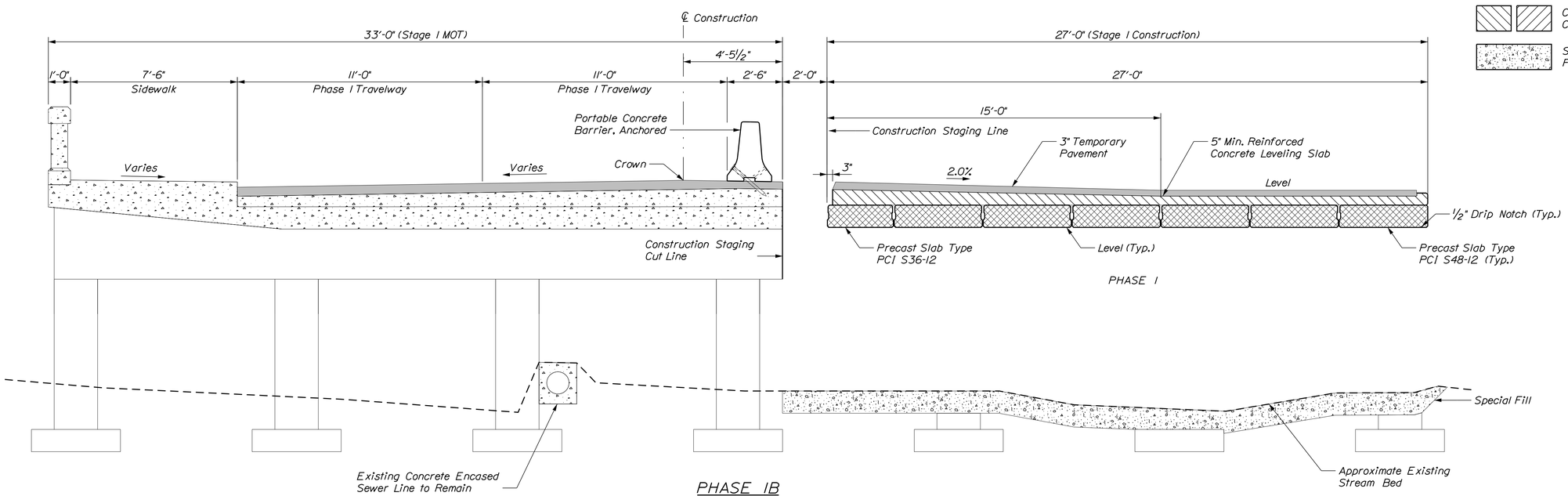

PHASE I

PHASE IB
(Looking Up-Station)

TYLin

STATE OF MAINE
DEPARTMENT OF TRANSPORTATION

2311600

WIN 023116.00

BRIDGE PLANS

BRIDGE NO. 3610

STATE OF MAINE DANIEL S. MYERS No. 12572 LICENSED PROFESSIONAL ENGINEER

P.E. NUMBER 12572

SIGNATURE

10/26/23

DATE

PROJ. MANAGER	JULIE BRASCH		
DESIGN-DETAILED	J. Legere	BY	DATE
CHECKED-REVIEWED	D. Myers	J. Legere	8/2022
DESIGN2-DETAILED2		D. Myers	8/2022
DESIGN3-DETAILED3			
REVISIONS 1			
REVISIONS 2			
REVISIONS 3			
REVISIONS 4			
FIELD CHANGES			

TANNERY BROOK BRIDGE
OVER TANNERY BROOK
NORWAY OXFORD COUNTY

STAGED CONSTRUCTION
SHEET 1 OF 2

SHEET NUMBER

10

OF 31

Filename: ...\010_Superstructure_Phasing_1.dgn Division: HIGHWAY Username: Date:11/8/2023

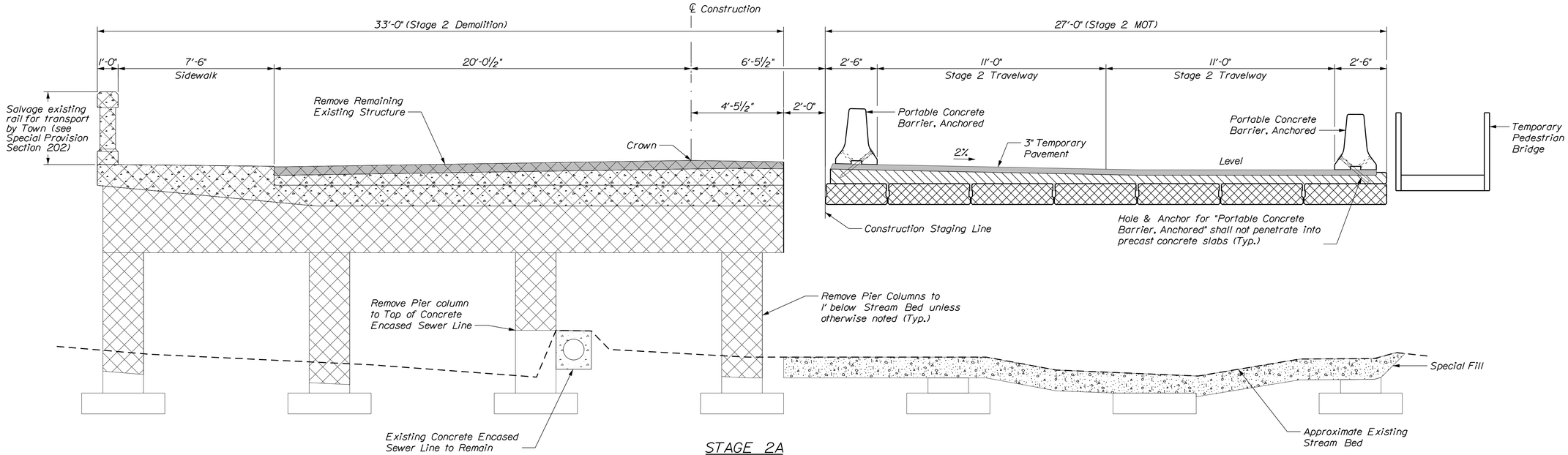

STAGE 2A
(Looking Up-Station)

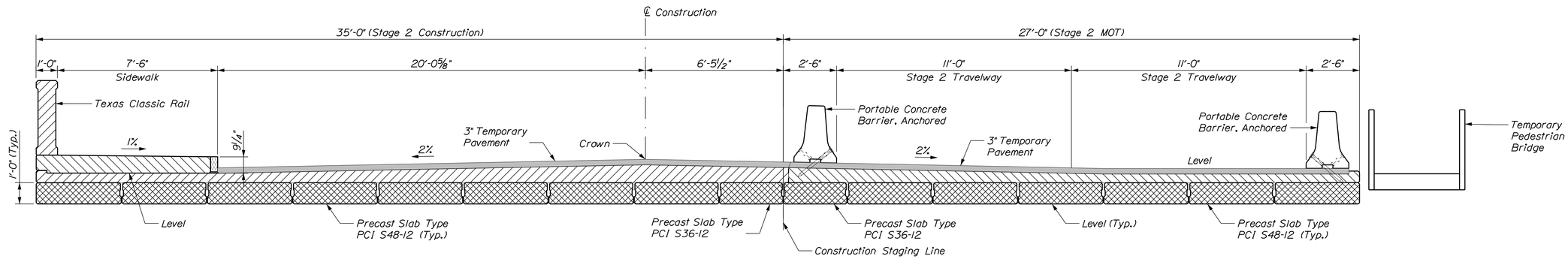

STAGE 2B
(Looking Up-Station)

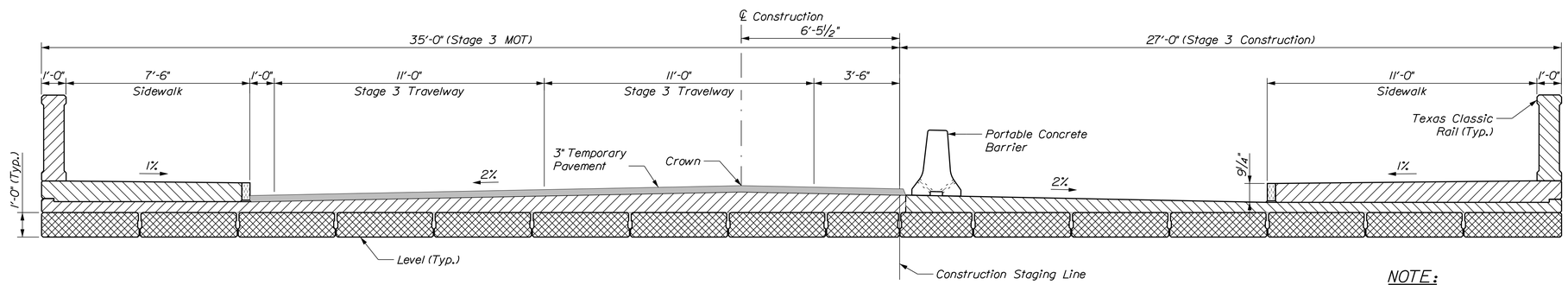

STAGE 3
(Looking Up-Station)

LEGEND

- Precast Slab
- Existing Structure Removal Limits
- Cast-in-place Concrete
- Special Fill

NOTE:
High performance waterproofing membrane and paving will be completed after Stage 3.

TYLin

STATE OF MAINE
DEPARTMENT OF TRANSPORTATION

2311600

WIN 023116.00

BRIDGE PLANS

BRIDGE NO. 3610

STATE OF MAINE DANIEL S. MYERS No. 12572 LICENSED PROFESSIONAL ENGINEER

SIGNATURE 12572

P.E. NUMBER

10/26/23

DATE

PROJ. MANAGER	JULIE BRASK	BY	DATE
DESIGN-DETAILED	J. Legere	J. Legere	8/2022
CHECKED-REVIEWED	D. Myers	D. Myers	8/2022
DESIGN2-DETAILED2			
DESIGN3-DETAILED3			
REVISIONS 1			
REVISIONS 2			
REVISIONS 3			
REVISIONS 4			
FIELD CHANGES			

TANNERY BROOK BRIDGE
OVER TANNERY BROOK
NORWAY OXFORD COUNTY

STAGED CONSTRUCTION
SHEET 2 OF 2

SHEET NUMBER
11
OF 31

Filename: ...\011_Superstructure_Phasing_2.dgn Division: HIGHWAY Username: Date:11/8/2023

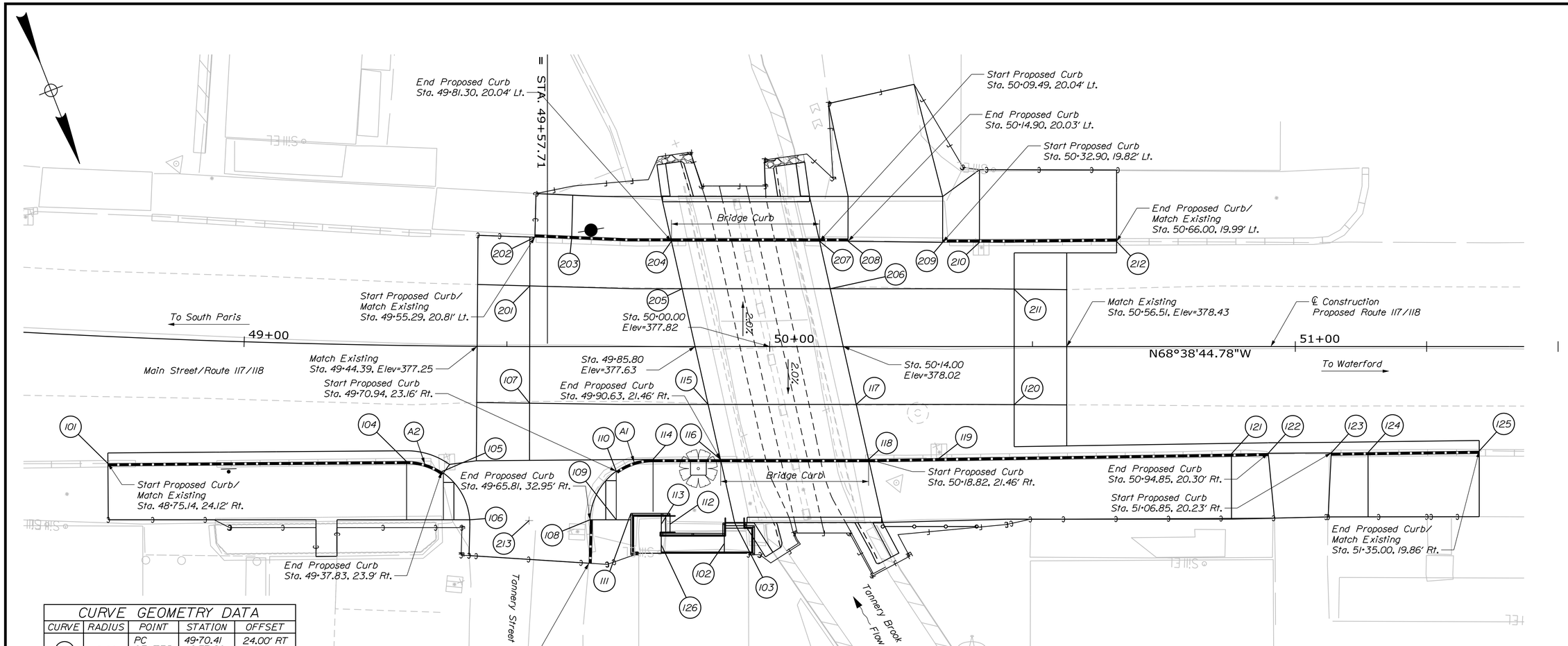

CURB GEOMETRY PLAN

10 0 10 20
Scale of Feet

CURVE GEOMETRY DATA				
CURVE	RADIUS	POINT	STATION	OFFSET
A1	12.00'	PC CENTER PT	49+70.41 49+77.80 49+77.80	24.00' RT 33.46' RT 21.46' RT
A2	12.00'	PC CENTER PT	49+31.18 49+31.44 49+37.83	22.02' RT 34.02' RT 23.90' RT

POINT DATA					
POINT	DESCRIPTION	STATION	OFFSET (FT.)		ELEV. (FT.)
101	CURB LINE (TOP PAVE)	48+75.14	24.12	RT	376.06
102	BOTTOM OF RAMP	49+91.37	37.58	RT	377.86
103	BOTTOM OF RAMP	49+93.99	33.58	RT	377.91
104	CURB LINE (TOP PAVE)	49+31.18	22.02	RT	376.13
105	CURB LINE (TOP PAVE)	49+37.83	23.93	RT	376.08
106	EDGE OF PAVEMENT	49+43.18	33.01	RT	375.99
107	EDGE OF TRAVEL LANE	49+54.34	10.78	RT	377.02
108	CURB LINE (TOP PAVE)	49+65.81	32.95	RT	375.74
109	EDGE OF SIDEWALK	49+70.81	32.95	RT	375.82
110	CURB LINE (TOP PAVE)	49+70.81	23.70	RT	376.30
111	EDGE OF SIDEWALK	49+73.58	31.74	RT	376.81
112	BOTTOM OF STEP	49+81.04	33.78	RT	377.47
113	TOP OF STEP	49+79.37	33.78	RT	378.95

POINT DATA					
POINT	DESCRIPTION	STATION	OFFSET (FT.)		ELEV. (FT.)
114	CURB LINE (TOP PAVE)	49+79.93	21.56	RT	376.75
115	EDGE OF TRAVEL LANE	49+88.28	11.00	RT	377.44
116	CURB LINE (TOP PAVE)	49+90.63	21.46	RT	377.26
117	EDGE OF TRAVEL LANE	50+16.47	11.00	RT	377.83
118	CURB LINE (TOP PAVE)	50+18.82	21.46	RT	377.67
119	CURB LINE (TOP PAVE)	50+32.23	21.25	RT	377.36
120	EDGE OF TRAVEL LANE	50+46.51	11.04	RT	378.04
121	CURB LINE (TOP PAVE)	50+87.85	20.41	RT	378.24
122	CURB LINE (TOP PAVE)	50+94.85	20.30	RT	378.37
123	CURB LINE (TOP PAVE)	51+06.85	20.23	RT	378.57
124	CURB LINE (TOP PAVE)	51+13.85	20.14	RT	378.61
125	CURB LINE (TOP PAVE)	51+35.00	19.86	RT	378.73
126	TOP OF RAMP	49+79.37	37.70	RT	378.95

POINT DATA					
POINT	DESCRIPTION	STATION	OFFSET (FT.)		ELEV. (FT.)
201	EDGE OF TRAVEL LANE	49+54.34	11.53	LT	377.08
202	CURB LINE (TOP PAVE)	49+55.29	20.81	LT	376.32
203	CURB LINE (TOP PAVE)	49+62.32	20.62	LT	376.55
204	CURB LINE (TOP PAVE)	49+81.30	20.04	LT	377.17
205	EDGE OF TRAVEL LANE	49+83.33	11.00	LT	377.37
206	EDGE OF TRAVEL LANE	50+11.52	11.00	LT	377.76
207	CURB LINE (TOP PAVE)	50+09.49	20.04	LT	377.54
208	CURB LINE (TOP PAVE)	50+14.90	20.03	LT	377.57
209	CURB LINE (TOP PAVE)	50+32.90	19.82	LT	377.62
210	CURB LINE (TOP PAVE)	50+39.90	19.82	LT	377.62
211	EDGE OF TRAVEL LANE	50+46.51	10.90	LT	378.10
212	CURB LINE (TOP PAVE)	50+66.00	19.99	LT	378.01
213	CROWN OF ROAD	49+54.29	33.11	RT	376.10

POINT DATA					
POINT	DESCRIPTION	STATION	OFFSET (FT.)		ELEV. (FT.)
214	BOTTOM OF STEP	49+77.08	81.86	RT	376.49
215	TOP OF RAMP	49+72.04	73.32	RT	379.19
216	BOTTOM OF RAMP	49+67.95	89.32	RT	376.71±
217	TOP OF RAMP	49+67.95	66.32	RT	378.63
218	TOP OF STEP	49+77.08	79.11	RT	379.19

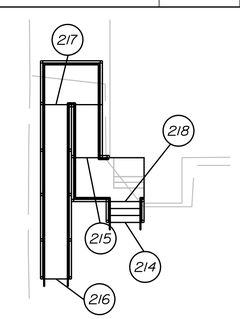

TEMPORARY WOODEN RAMP

10 0 10 20
Scale of Feet

TERMINAL CURB	
END POINT	LENGTH
105	7.52'
110	7.46'
122	7.00'
123	7.00'
202	7.00'
208	5.41'
209	7.00'

TYLin

STATE OF MAINE
DEPARTMENT OF TRANSPORTATION

2311600

WIN 023116.00

BRIDGE NO. 3610

BRIDGE PLANS

STATE OF MAINE
DANIEL S. MYERS
No. 12572
LICENSED
PROFESSIONAL ENGINEER

SIGNATURE 12572

P.E. NUMBER 10/26/23

DATE

PROJ. MANAGER	JULIE BRASK		
DESIGN-DETAILED	N. Buczek	S. Morgan	8/2022
CHECKED-REVIEWED	S. Davis	D. Myers	8/2022
DESIGN2-DETAILED2			
DESIGN3-DETAILED3			
REVISIONS 1			
REVISIONS 2			
REVISIONS 3			
REVISIONS 4			
FIELD CHANGES			

TANNERY BROOK BRIDGE
OVER TANNERY BROOK
NORWAY OXFORD COUNTY

CURB GEOMETRY AND GRADING PLAN

SHEET NUMBER
12
OF 31

Filename: ...\012_Curb Layout and Grading Plan.dgnDivision: HIGHWAY Username: Date:11/8/2023

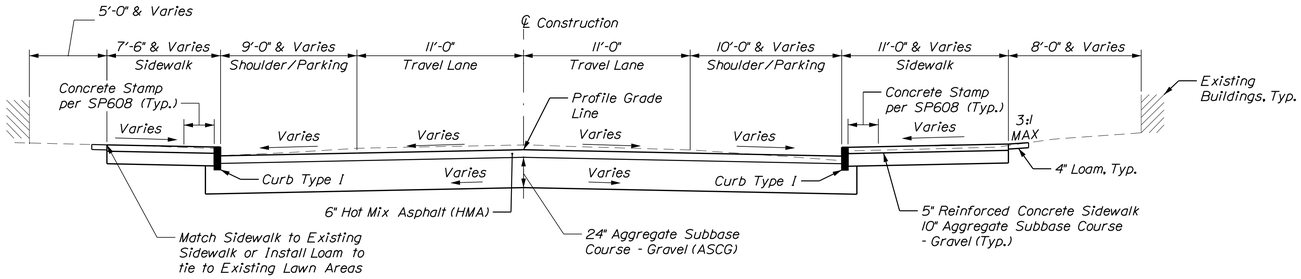

MAIN STREET (RT. 117/118) APPROACH DESIGN SECTION

Sta 49+54.39 to Sta 49+85.81
Sta 50+13.99 to Sta 50+46.51

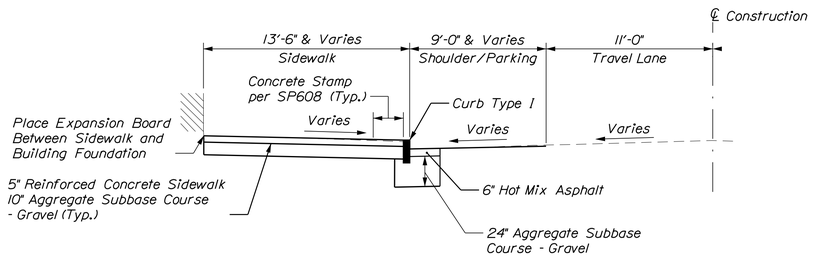

MAIN STREET (RT. 117/118) APPROACH DESIGN SECTION

Sta 50+46.51 to Sta 50+66.00 Lt.

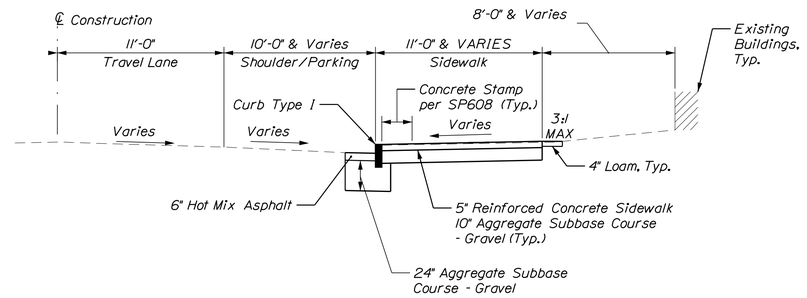

MAIN STREET (RT. 117/118) CURB/SIDEWALK SECTION

Sta 48+75.00 to Sta 49+54.39 Rt.
Sta 50+46.51 to Sta 51+35.00 Rt.

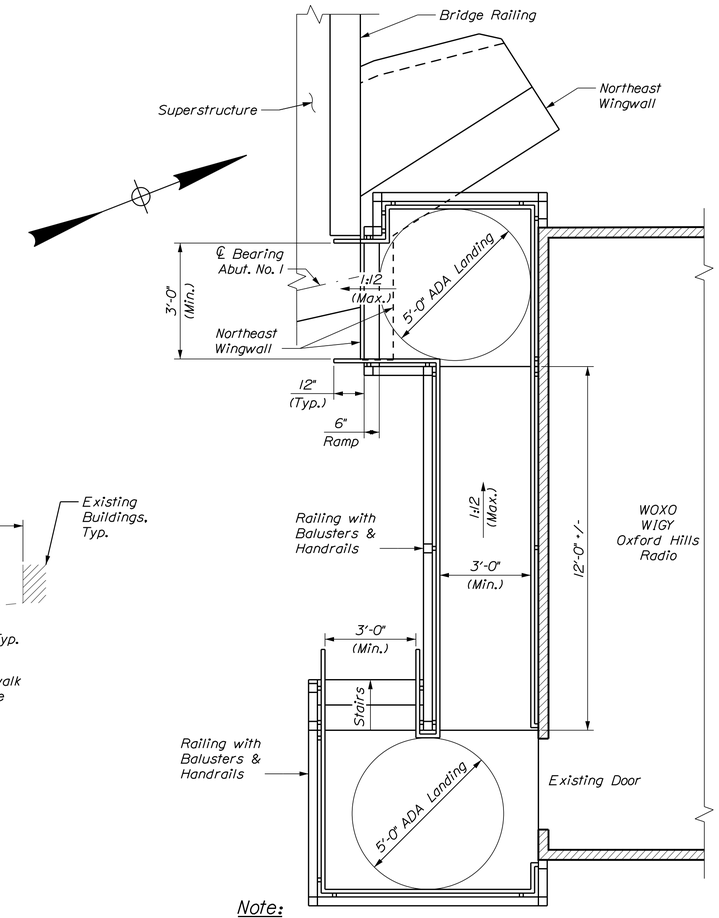

Note:

All landings, ramps and stairs shall comply with ADA Standards for Accessible Design.

PERMANENT WOODEN RAMP DETAIL

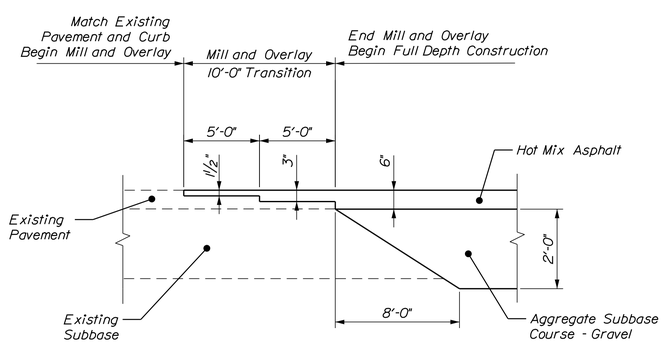

APPROACH PAVEMENT STEPPING DETAIL - MAIN STREET (RT. 117/118)

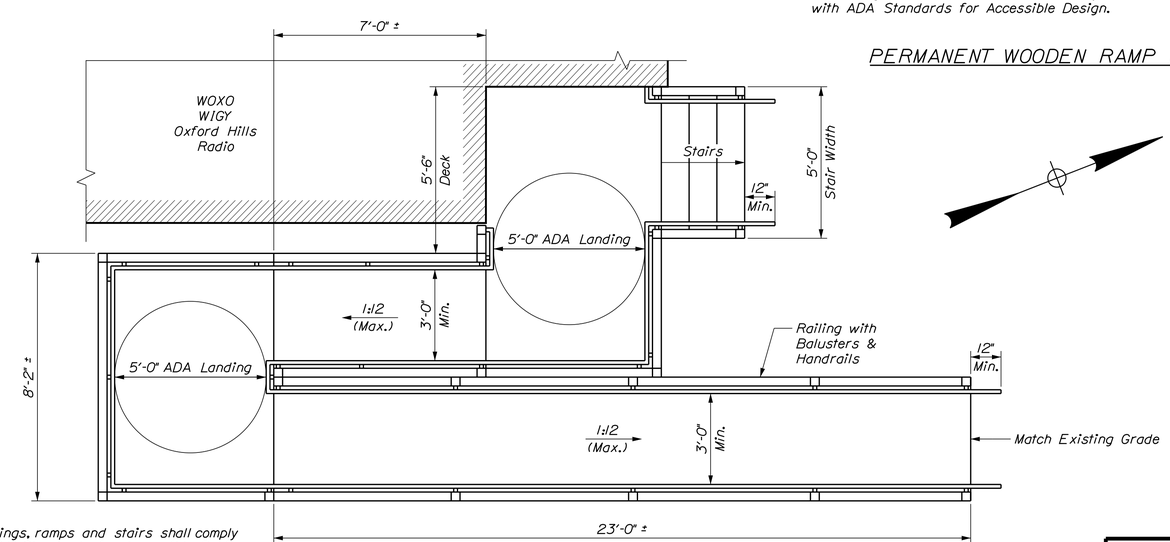

Note:

All landings, ramps and stairs shall comply with ADA Standards for Accessible Design.

TEMPORARY WOODEN RAMP DETAIL

STATE OF MAINE
DEPARTMENT OF TRANSPORTATION

2311600

WIN 023116.00

BRIDGE PLANS

BRIDGE NO. 3610

STATE OF MAINE DANIEL S. MYERS No. 12572 LICENSED PROFESSIONAL ENGINEER

P.E. NUMBER 12572
SIGNATURE
10/26/23
DATE

PROJ. MANAGER	JULIE BRASCH		
DESIGN-DETAILED	T. Antz	BY	DATE
CHECKED-REVIEWED	S. Davis	T. Antz	10/2023
DESIGN2-DETAILED2		S. Davis	10/2023
DESIGN3-DETAILED3			
REVISIONS 1			
REVISIONS 2			
REVISIONS 3			
REVISIONS 4			
FIELD CHANGES			

TANNERY BROOK BRIDGE
OVER TANNERY BROOK
NORWAY OXFORD COUNTY

TYPICAL SECTIONS

TYLin

SHEET NUMBER
13
OF 31

Date:11/8/2023
Username:
Division: HIGHWAY
Filename: ...\MSTA\013_Typ_Sections.dgn

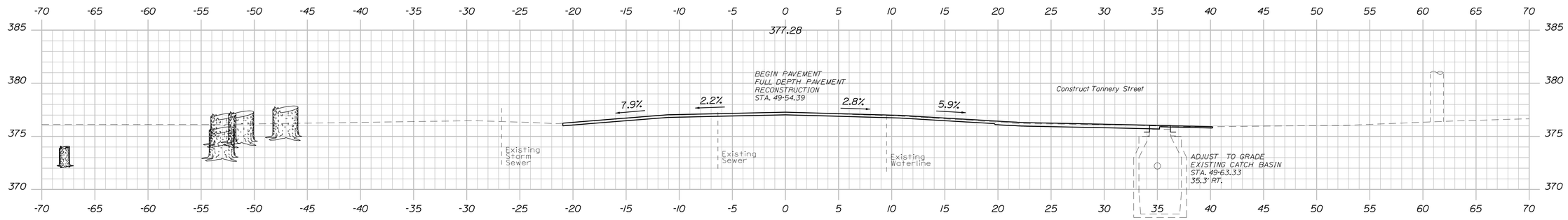

49+50.00

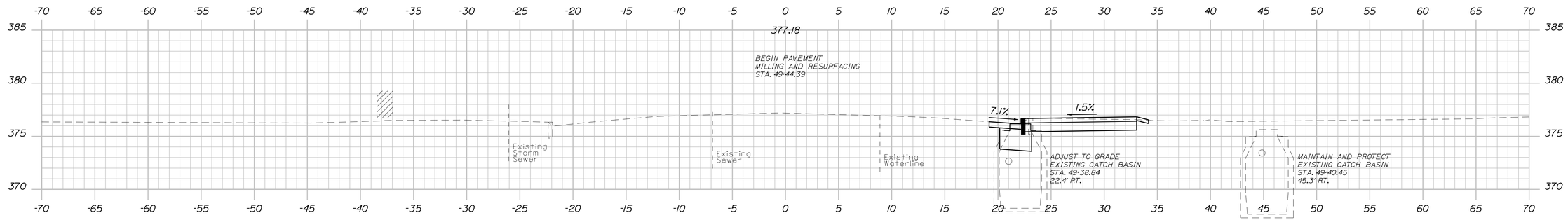

49+25.00

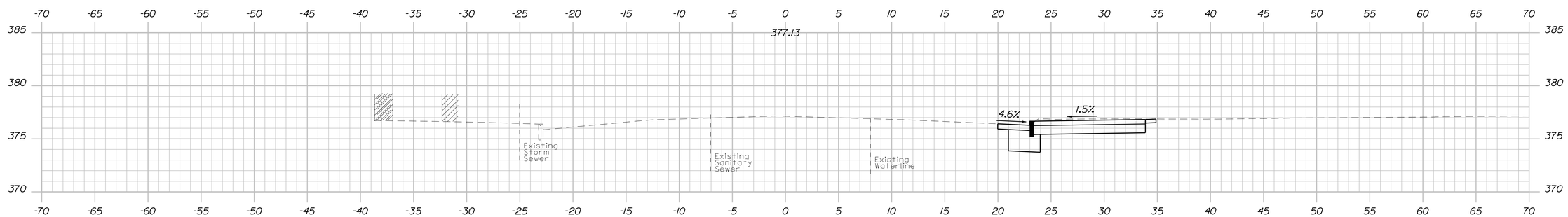

49+00.00

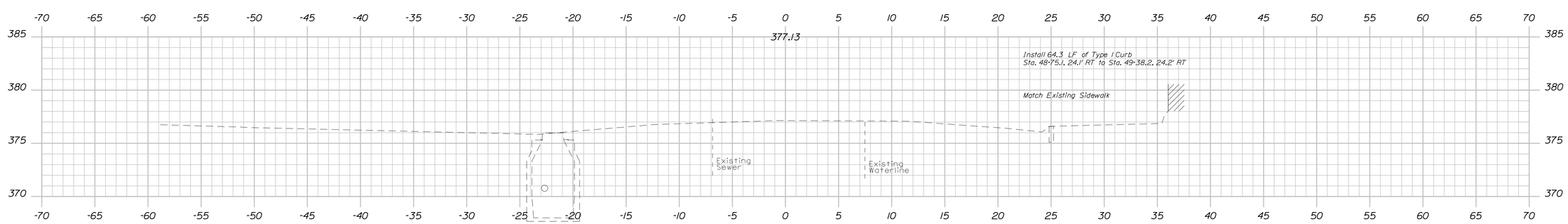

48+75.00

TYLin

STATE OF MAINE
DEPARTMENT OF TRANSPORTATION

2311600

WIN 023116.00

BRIDGE PLANS

BRIDGE NO. 3610

STATE OF MAINE
DANIEL S. MYERS
No. 12572
LICENSED
PROFESSIONAL ENGINEER

P.E. NUMBER 12572
SIGNATURE
10/26/23
DATE

PROJ. MANAGER	JULIE BRASCH		
DESIGN-DETAILED	T. Antz	BY	DATE
CHECKED-REVIEWED	S. Davis	T. Antz	10/2023
DESIGN2-DETAILED2		S. Davis	10/2023
DESIGN3-DETAILED3			
REVISIONS 1			
REVISIONS 2			
REVISIONS 3			
REVISIONS 4			
FIELD CHANGES			

TANNERY BROOK BRIDGE
OVER TANNERY BROOK
NORWAY OXFORD COUNTY

CROSS SECTIONS

SHEET NUMBER
14
OF 31

Sta. 48+75.00 to Sta. 49+50.00

Filename: ...\HIGHWAY\MSTA\014_016_Xsect.dgn Division: HIGHWAY Username: Date:11/8/2023

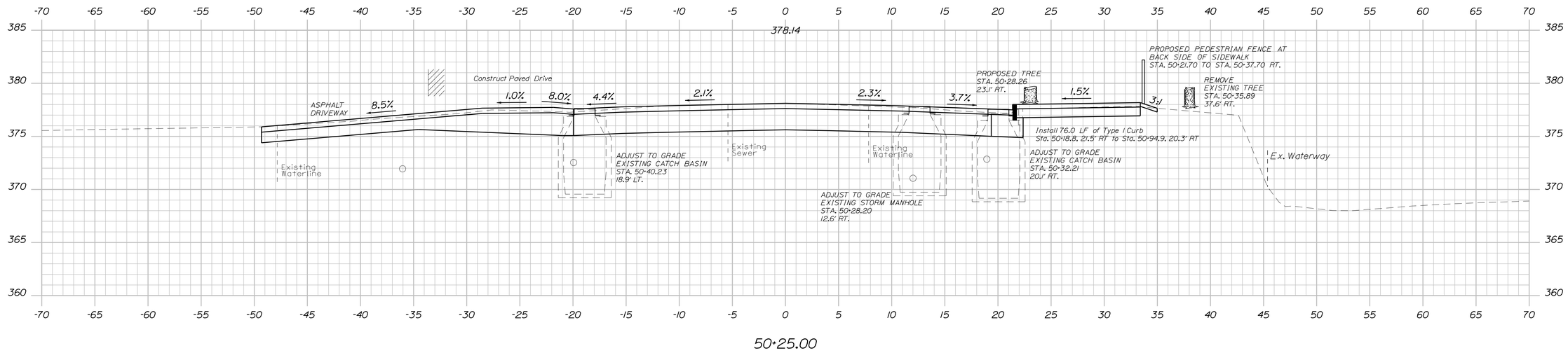

Install 5.4 LF of Type I Curb
Sta. 50+09.5, 20.0' LT to Sta. 50+14.9, 20.0' LT

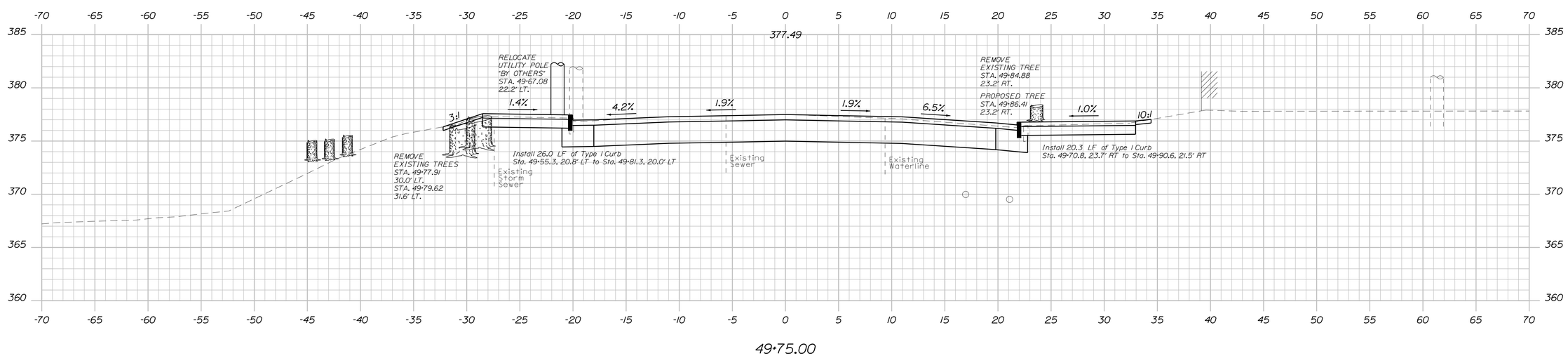

STATE OF MAINE
DEPARTMENT OF TRANSPORTATION

2311600

WIN 023116.00

BRIDGE PLANS

BRIDGE NO. 3610

STATE OF MAINE DANIEL S. MYERS No. 12572 LICENSED PROFESSIONAL ENGINEER

P.E. NUMBER 12572

SIGNATURE

10/26/23

DATE

PROJ. MANAGER	JULIE BRASCH		
DESIGN-DETAILED	T. Antz	BY	DATE
CHECKED-REVIEWED	S. Davis	T. Antz	10/2023
DESIGN2-DETAILED2		S. Davis	10/2023
DESIGN3-DETAILED3			
REVISIONS 1			
REVISIONS 2			
REVISIONS 3			
REVISIONS 4			
FIELD CHANGES			

TANNERY BROOK BRIDGE
OVER TANNERY BROOK
NORWAY OXFORD COUNTY

CROSS SECTIONS

SHEET NUMBER

15

OF 31

TYLin

Sta. 49+75.00 to Sta. 50+25.00

Date:11/8/2023

Username:

Division: HIGHWAY

Filename: ...\HIGHWAY\MSTA\014_016_Xsect1.dgn

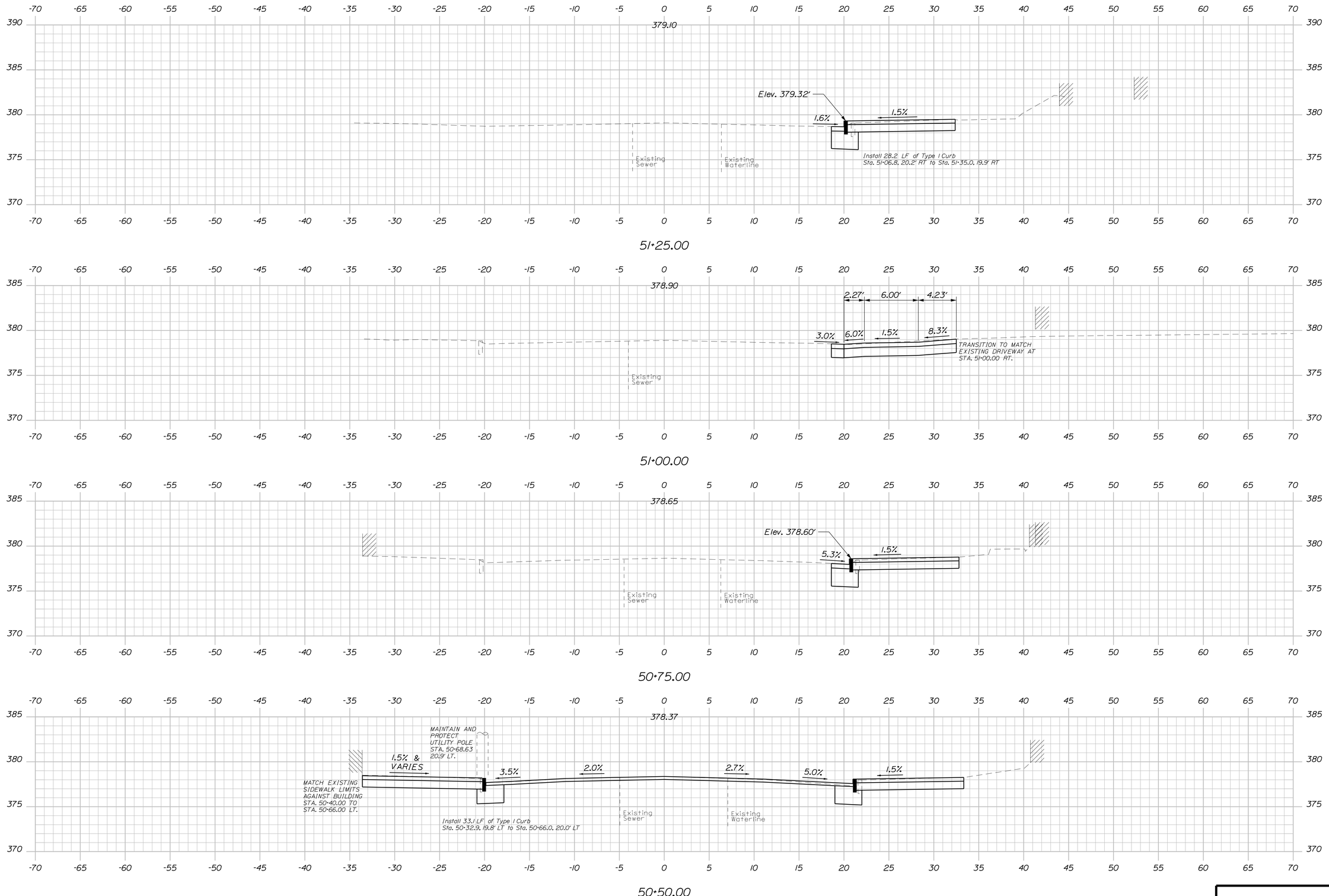

STATE OF MAINE
DEPARTMENT OF TRANSPORTATION

2311600

WIN 023116.00

BRIDGE PLANS

BRIDGE NO. 3610

STATE OF MAINE
DANIEL S. MYERS
No. 12572
LICENSED
PROFESSIONAL ENGINEER

P.E. NUMBER 12572
SIGNATURE
10/26/23
DATE

		BY	DATE
PROJ. MANAGER	JULIE BRASCH		
DESIGN-DETAILED	T. Antz	T. Antz	10/2023
CHECKED-REVIEWED	S. Davis	S. Davis	10/2023
DESIGN2-DETAILED2			
DESIGN3-DETAILED3			
REVISIONS 1			
REVISIONS 2			
REVISIONS 3			
REVISIONS 4			
FIELD CHANGES			

TANNERY BROOK BRIDGE
OVER TANNERY BROOK
NORWAY OXFORD COUNTY

CROSS SECTIONS

TYLin

SHEET NUMBER
16
OF 31

Sta. 50+50.00 to Sta. 51+25.00

Date:11/8/2023
Username:
Filename: ...\HIGHWAY\MSTA\014_016_Xsect.dgn Division: HIGHWAY

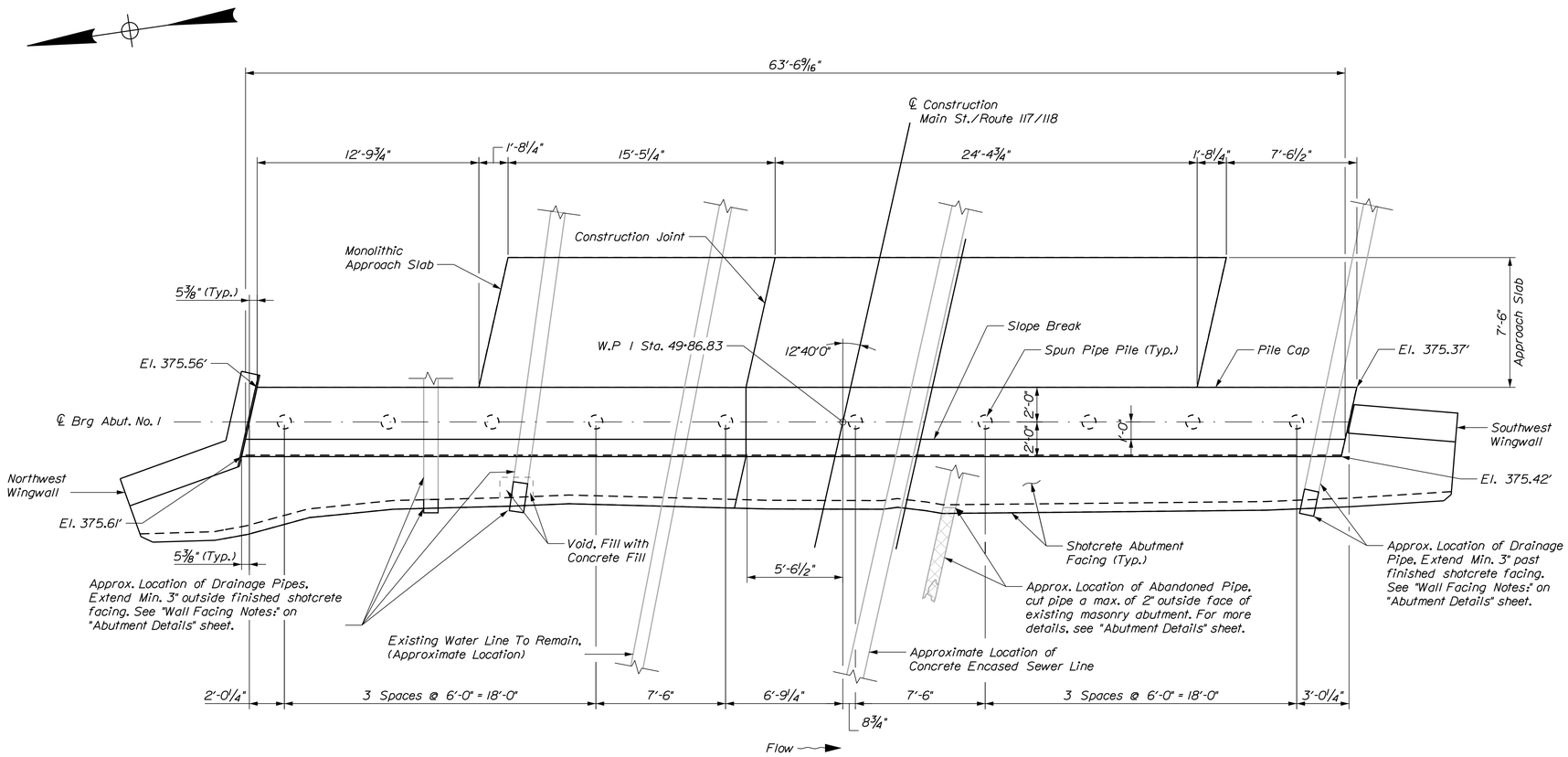

ABUTMENT NO. 1 PLAN

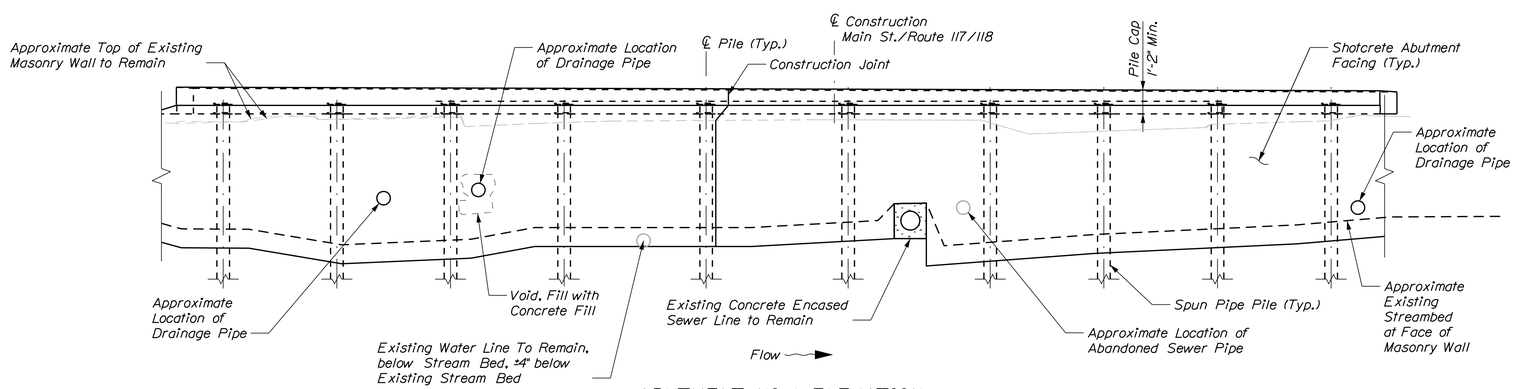

ABUTMENT NO. 1 ELEVATION

Elevation Perpendicular to Pile Cap Face
Wingwalls not shown

ABUTMENT NOTES:

1. Place drains with a 2-inch diameter in the shotcrete concrete facing at 5 feet maximum spacing. The exact location and depth will be determined by the Resident. Payment shall be incidental to 502 items.
2. Cover joints where waterstops are not required in accordance with Standard Details Section 502.
3. Near face bridge seat elevations do not account for the 1" tall beveled portion of the bridge seat.
4. The Pile Cap & Wingwalls will be paid under Item 502.219, "Structural Concrete, Abutments and Retaining Walls".
5. The Abutment Facing will be paid under Item 517.62, "Shotcrete Abutment Facing".
6. The Approach Slabs will be paid under Item 502.31, "Structural Concrete Approach Slab".

SPUN PIPE PILE NOTES:

1. The spun pipe pile shall consist of a steel pile casing filled with grout. No internal reinforcing steel is required.
2. Construct spun pipe piles in accordance with Special Provisions Section 501, Foundation Piles - Spun Pipe Piles.
3. The pile casing shall be in accordance with Special Provisions Section 501, Foundation Piles - Spun Pipe Piles or approved equal.
4. Spun pipe piles shall be constructed plumb.
5. Spun pipe piles shall be embedded a minimum of 4 feet into competent bedrock under observation of the Geotechnical Engineer.
6. Estimate of piles required (5 feet contingency included):

   Abutment No. 1: 10 ~ 9.625" ϕ x 0.545" wall thickness Pipe Piles @ ±25 feet long
   Abutment No. 2: 10 ~ 9.625" ϕ x 0.545" wall thickness Pipe Piles @ ±23 feet long
7. Pile top plate steel shall conform to the requirements of AASHTO designation M270 (ASTM designation A709) grade 50.
8. Required Nominal Resistance:
   Compression: 500 kips
   Tension: 0 kips

   Factored Design Load:
   Compression: 230 kips
   Tension: 0 kips
9. Contractor shall be responsible for ensuring piles do not conflict with underground utilities. Pile locations shown may be adjusted along the centerline of abutment as approved by the Resident. Maximum pile spacing shall not exceed 8'-6" center to center. Piles shall not be off of centerline abutment by more than 2 inches.
10. Threaded Permanent Steel Casing joints shall not be used within 5 feet of the bottom of the pile cap.

STATE OF MAINE
DEPARTMENT OF TRANSPORTATION

2311600

WIN 023116.00

BRIDGE NO. 3610

BRIDGE PLANS

STATE OF MAINE DANIEL S. MYERS No. 12572 LICENSED PROFESSIONAL ENGINEER

SIGNATURE 12572
P.E. NUMBER
10/26/23
DATE

		BY	DATE
PROJ. MANAGER	JULIE BRASK		
DESIGN-DETAILED	J.Legere	J.Legere	6/2023
CHECKED-REVIEWED	B.Toothaker	D.Myers	6/2023
DESIGN2-DETAILED2			
DESIGN3-DETAILED3			
REVISIONS 1			
REVISIONS 2			
REVISIONS 3			
REVISIONS 4			
FIELD CHANGES			

TANNERY BROOK BRIDGE
OVER TANNERY BROOK
NORWAY OXFORD COUNTY

ABUTMENT NO. 1 PLAN & ELEVATION

SHEET NUMBER
17
OF 31

TYLin

Filename: ...\017_Abutment_No1_Plan_Elevation.dgn Division: HIGHWAY Username: Date:11/8/2023

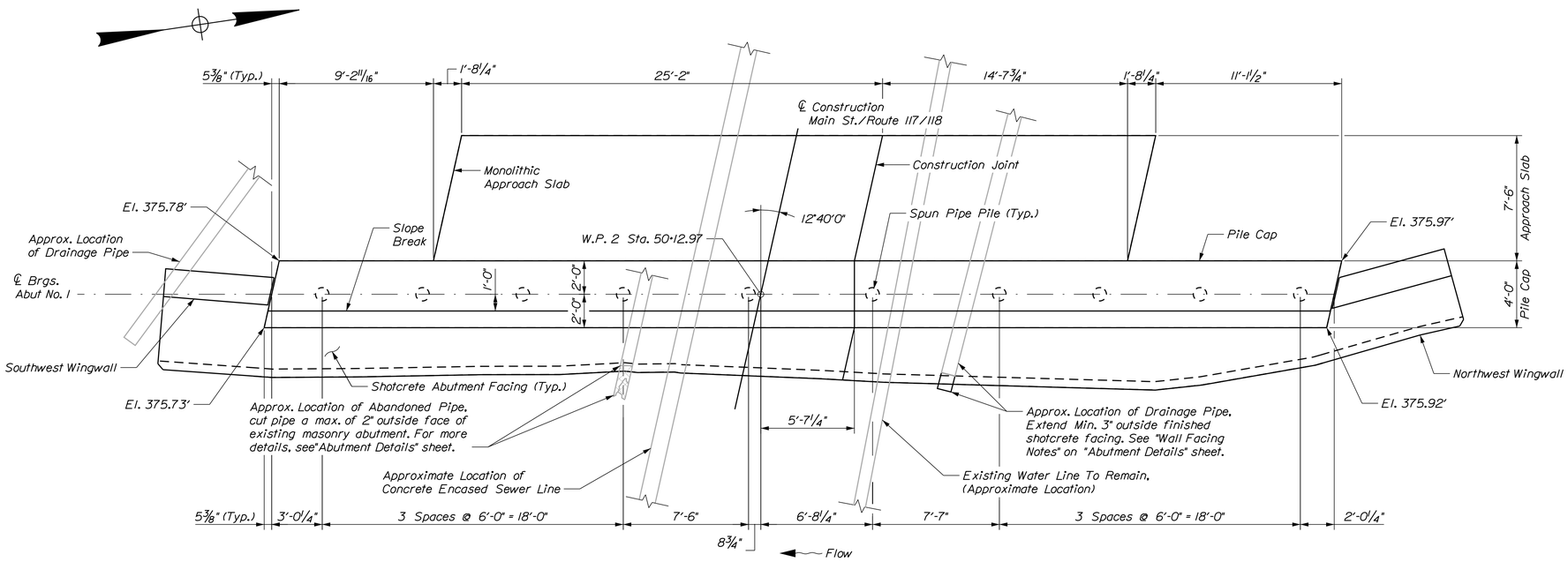

ABUTMENT NO. 2 PLAN

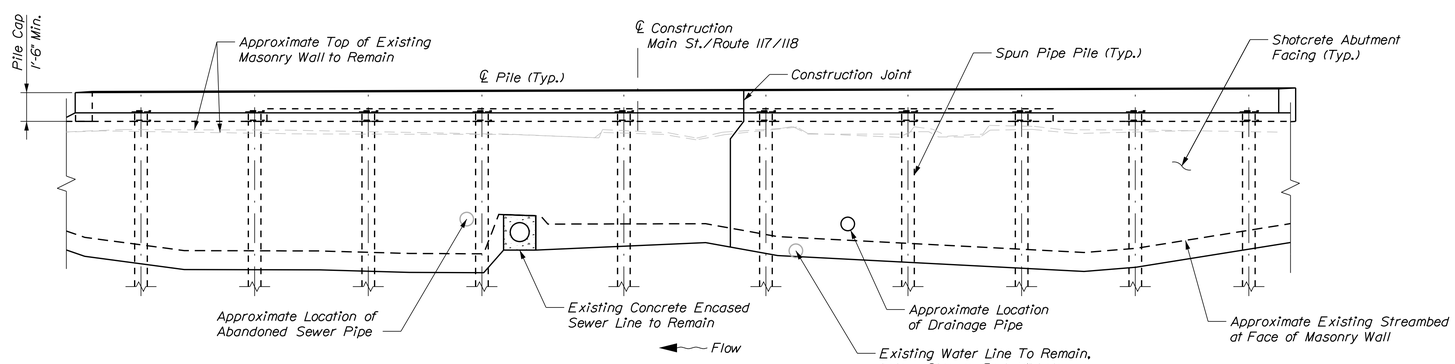

ABUTMENT NO. 2 ELEVATION

Elevation perpendicular to Pile Cap Face
Wingwalls not shown

STATE OF MAINE
DEPARTMENT OF TRANSPORTATION

2311600

WIN 023116.00

BRIDGE NO. 3610

BRIDGE PLANS

STATE OF MAINE
DANIEL S. MYERS
No. 12572
LICENSED
PROFESSIONAL ENGINEER

SIGNATURE 12572

P.E. NUMBER

10/26/23

DATE

PROJ. MANAGER	JULIE	BY	DATE
DESIGN-DETAILED	J. Legere	J. Legere	6/2023
CHECKED-REVIEWED	B. Toothaker	D. Myers	6/2023
DESIGN2-DETAILED2			
DESIGN3-DETAILED3			
REVISIONS 1			
REVISIONS 2			
REVISIONS 3			
REVISIONS 4			
FIELD CHANGES			

TANNERY BROOK BRIDGE
OVER TANNERY BROOK
NORWAY OXFORD COUNTY

ABUTMENT NO. 2 PLAN
& ELEVATION

SHEET NUMBER

18

OF 31

TYLin

Filename: ...\018_Abutment_No2_Plan_Elevation.dgnDivision: HIGHWAY Username: Date:11/8/2023

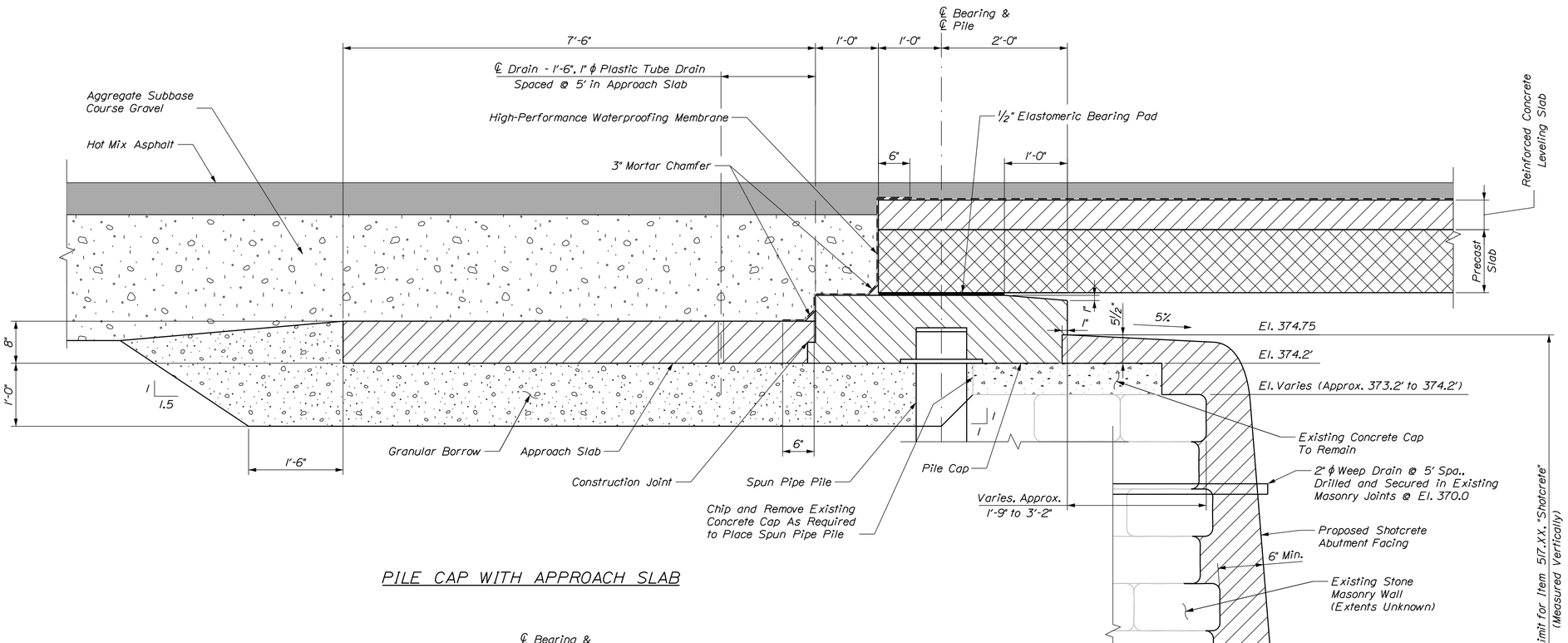

PILE CAP WITH APPROACH SLAB

TYPICAL ABUTMENT SECTION

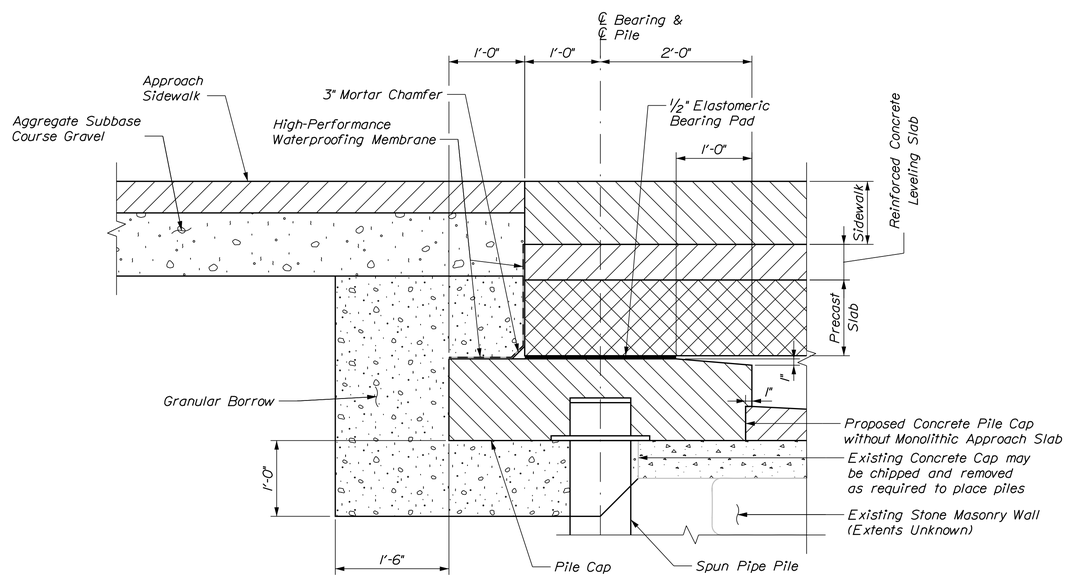

PILE CAP SECTION WITHOUT APPROACH SLAB

NOTES:

1. The 3" Mortar Chamfers shall be considered Incidental to related contract items.
2. For additional notes and details, see sheet, "Abutment Details."

TYLin

STATE OF MAINE
DEPARTMENT OF TRANSPORTATION

2311600

WIN 023116.00

BRIDGE NO. 3610

BRIDGE PLANS

STATE OF MAINE
DANIEL S. MYERS
No. 12572
LICENSED
PROFESSIONAL ENGINEER

P.E. NUMBER 12572
SIGNATURE
10/26/23
DATE

PROJ. MANAGER	JULIE BRASCH	BY	DATE
DESIGN-DETAILED	B. Toothaker	B. Toothaker	6/2023
CHECKED-REVIEWED	D. Myers	D. Myers	6/2023
DESIGN2-DETAILED2			
DESIGN3-DETAILED3			
REVISIONS 1			
REVISIONS 2			
REVISIONS 3			
REVISIONS 4			
FIELD CHANGES			

TANNERY BROOK BRIDGE
OVER TANNERY BROOK
NORWAY OXFORD COUNTY

ABUTMENT TYPICAL SECTIONS

SHEET NUMBER
19
OF 31

Filename: ...\019_Abutment_Typical_Sections.dgn Division: HIGHWAY Username: Date:11/8/2023

REINFORCING STEEL NOTES:

1. Reinforcing steel shall have a minimum concrete cover of 2 inches unless otherwise noted.
2. Bar sets from pile to fascia shall be spaced @ 8" max.
3. Bars next to pile shall have 1" clear from pile shaft.
4. For wingwall reinforcement details, see "Wingwall Details 1" sheet.
5. Shotcrete Concrete Facing, see "Abutment Details" sheet.

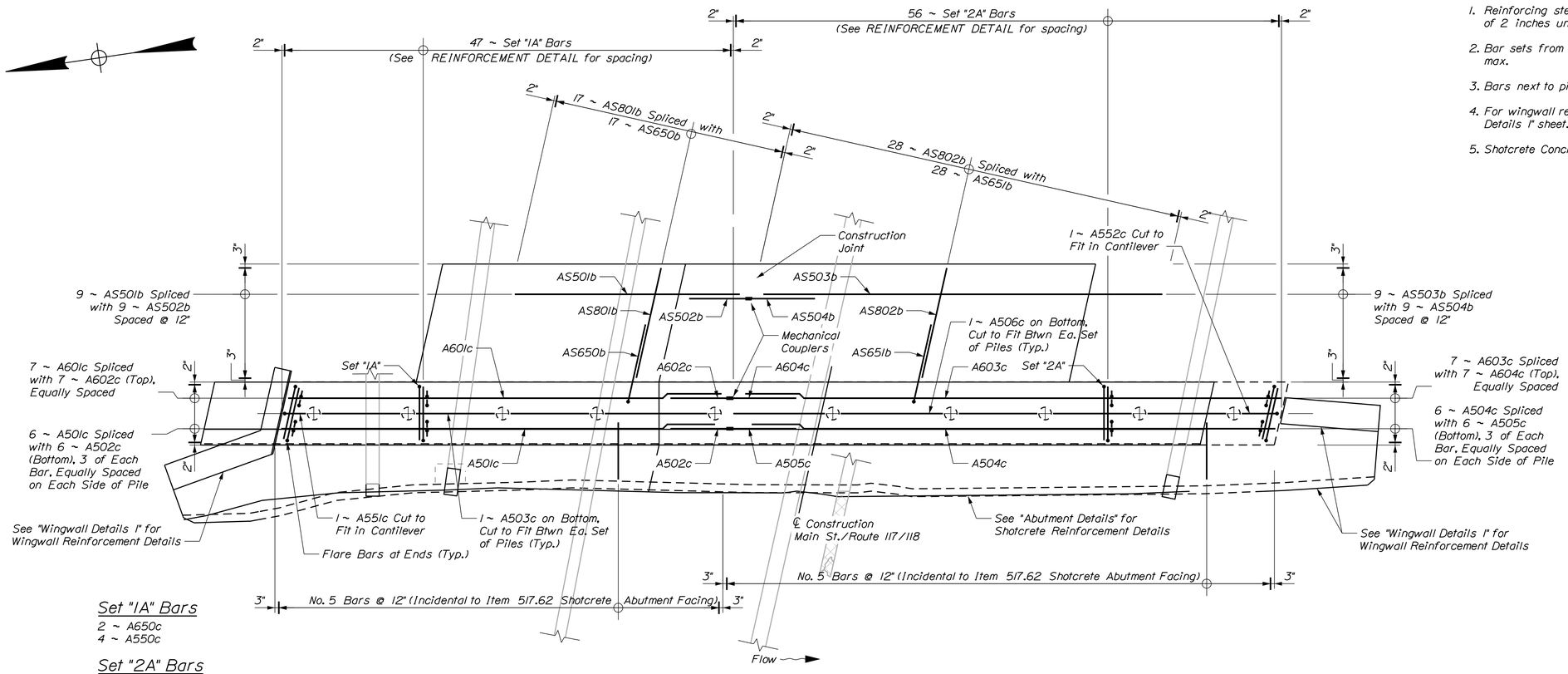

Set "1A" Bars

2 ~ A650c
4 ~ A550c

Set "2A" Bars

2 ~ A651c
4 ~ A553c

ABUTMENT NO. 1 REINFORCEMENT PLAN

Wingwalls & Shotcrete Facing Reinforcement not shown for clarity

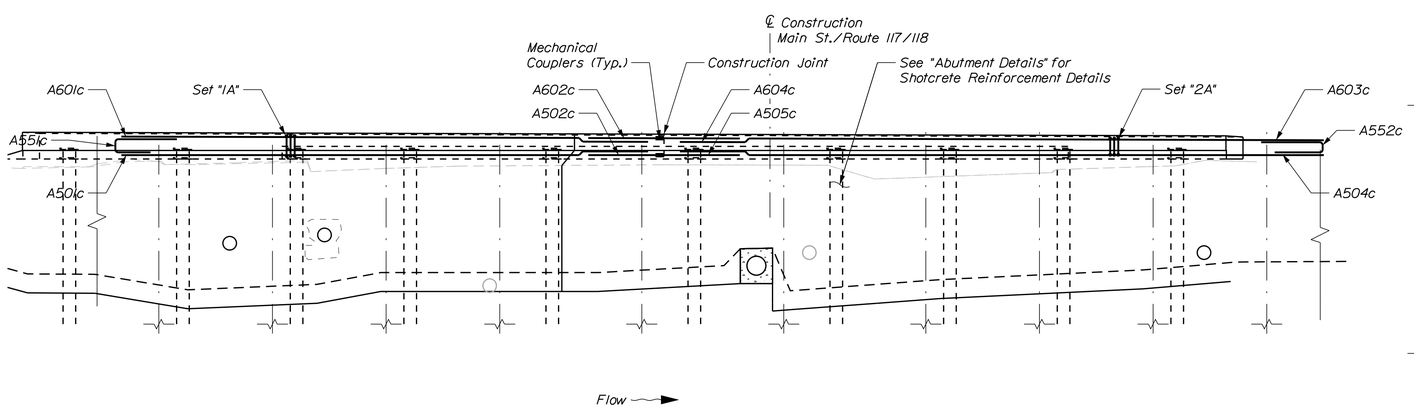

ABUTMENT NO. 1 REINFORCEMENT ELEVATION

Wingwalls & Shotcrete Facing Reinforcement not shown for clarity

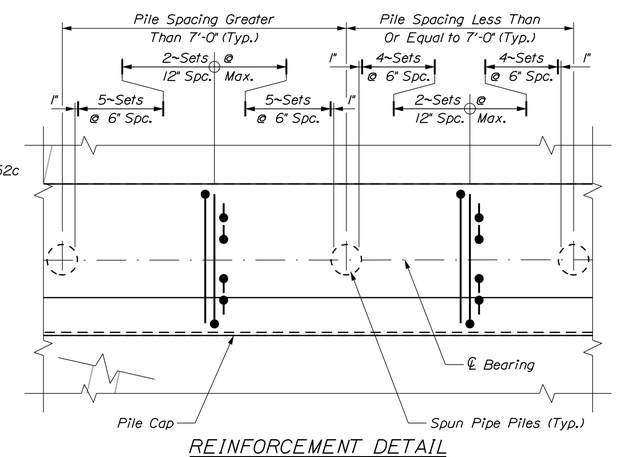

REINFORCEMENT DETAIL

(Abutment No. 1 Shown, Abutment No. 2 Similar)
(Sets are Set "1A" or Set "2A" Depending on Stage)

TYLin

STATE OF MAINE
DEPARTMENT OF TRANSPORTATION

2311600

WIN 023116.00

BRIDGE NO. 3610

BRIDGE PLANS

STATE OF MAINE DANIEL S. MYERS No. 12572 LICENSED PROFESSIONAL ENGINEER

SIGNATURE 12572

P.E. NUMBER

10/26/23

DATE

PROJ. MANAGER	JULIE BRASCH		
DESIGN-DETAILED	J.J.Legere	J.J.Legere	6/2023
CHECKED-REVIEWED	D.Myers	D.Myers	6/2023
DESIGN2-DETAILED2			
DESIGN3-DETAILED3			
REVISIONS 1			
REVISIONS 2			
REVISIONS 3			
REVISIONS 4			
FIELD CHANGES			

TANNERY BROOK BRIDGE
OVER TANNERY BROOK
NORWAY OXFORD COUNTY

ABUTMENT NO. 1 REINFORCEMENT

SHEET NUMBER

20

OF 31

Filename: ...\020_Abutment_No1_Reinforcing.dgn Division: HIGHWAY Username: Date:11/8/2023

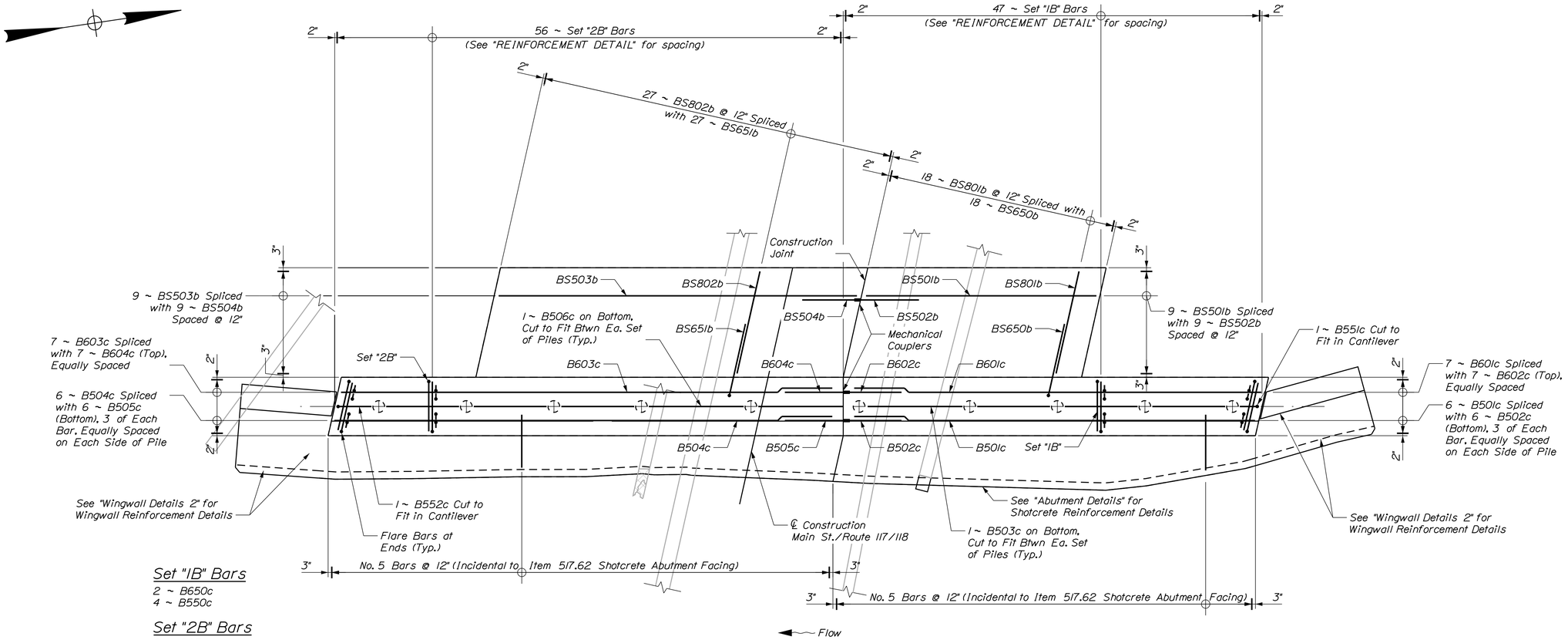

Set "1B" Bars
2 ~ B650c
4 ~ B550c

Set "2B" Bars
2 ~ B651c
4 ~ B553c

ABUTMENT NO. 2 REINFORCEMENT PLAN

Wingwalls & Shotcrete Facing Reinforcement not shown for clarity

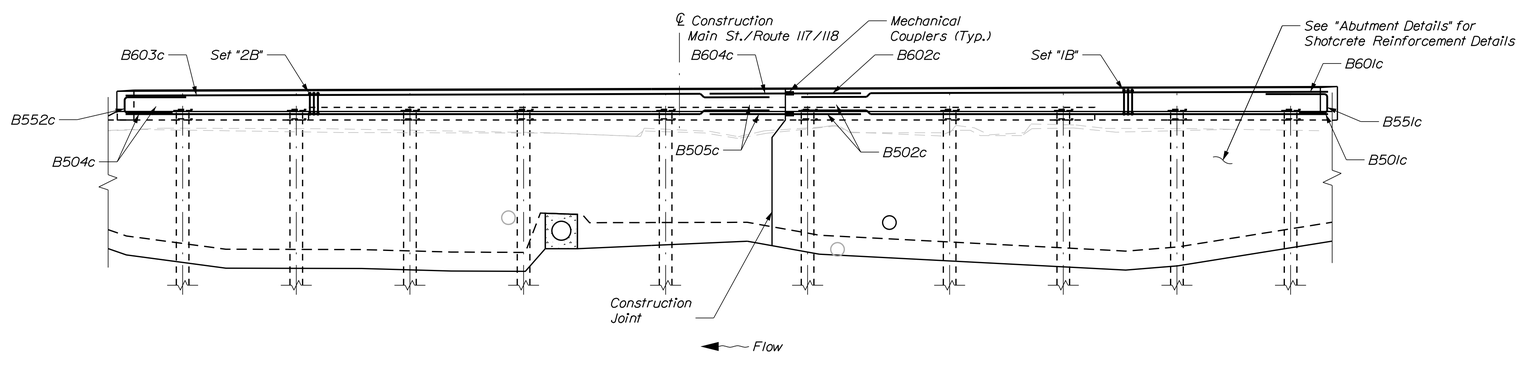

ABUTMENT NO. 2 REINFORCEMENT ELEVATION

Wingwalls & Shotcrete Facing Reinforcement not shown for clarity

STATE OF MAINE
DEPARTMENT OF TRANSPORTATION

2311600

WIN 023116.00

BRIDGE NO. 3610

BRIDGE PLANS

STATE OF MAINE DANIEL S. MYERS No. 12572 LICENSED PROFESSIONAL ENGINEER

SIGNATURE 12572

P.E. NUMBER 10/26/23

DATE

PROJ. MANAGER	JULIE BRASCH	BY	DATE
DESIGN-DETAILED	J.Legere	P.McClure	6/2023
CHECKED-REVIEWED	D.Myers	D.Myers	6/2023
DESIGN2-DETAILED2			
DESIGN3-DETAILED3			
REVISIONS 1			
REVISIONS 2			
REVISIONS 3			
REVISIONS 4			
FIELD CHANGES			

TANNERY BROOK BRIDGE
OVER TANNERY BROOK
NORWAY OXFORD COUNTY

ABUTMENT NO. 2 REINFORCEMENT

SHEET NUMBER
21
OF 31

TYLin

Filename: ...\021_Abutment_No2_Reinforcing.dgn Division: HIGHWAY Username: Date:11/8/2023

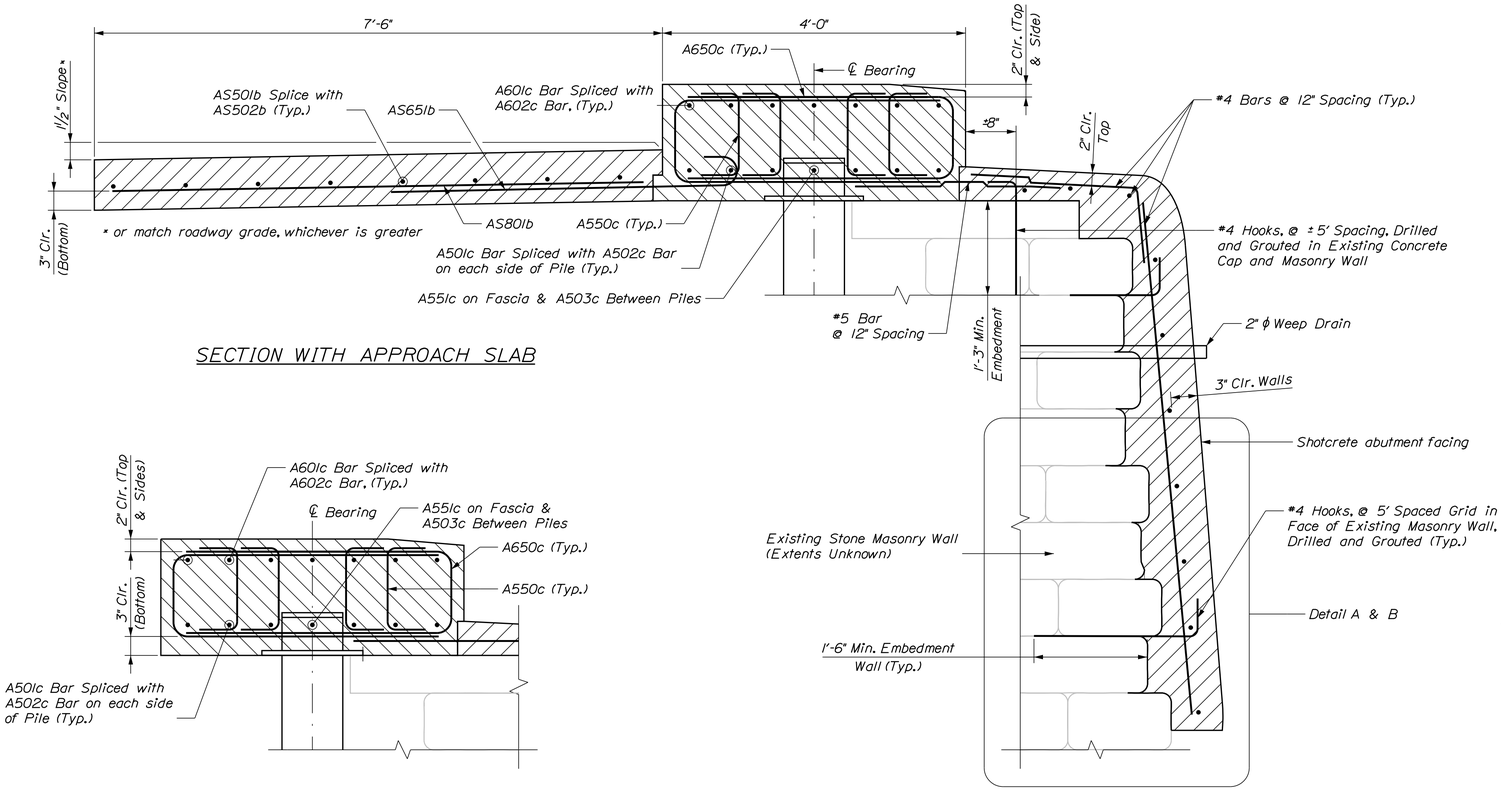

SECTION WITH APPROACH SLAB

SECTION WITHOUT MONOLITHIC APPROACH SLAB

MASONRY WALL FACING REINFORCEMENT

ABUTMENT REINFORCEMENT TYPICAL SECTION

(Abutment 1 Stage 1 shown, Abutment 1 Stage 2 & Abutment 2 Stages 1 & 2 similar)

ABUTMENT FACING NOTES:

1. Cut off existing pipe to be removed 2" max. outside face of existing masonry abutments. The pipe remaining in each abutment shall be plugged with concrete fill or hydraulic cement. See "Detail A". Payment will be incidental to Item 517.62, "Shotcrete Abutment Facing".
2. Extend existing pipes to remain to project a minimum of 3" past the proposed finished surface of the shotcrete facing surrounding the pipe. See "Detail B". All extensions shall be made with steel or HDPE pipe, with inside pipe diameter closely matching the existing pipe to remain. Pipe extensions may be slipped into the existing pipe ends, where approved by The Resident, and all voids between existing pipe and pipe extension material shall be filled with a grout or adhesive from the MaineDOT QPL. Payment shall be incidental to Item 517.62, "Shotcrete Abutment Facing".
3. Large voids created by removal of existing concrete, existing masonry stones, or other obstructions will be filled with concrete fill, prior to placing preliminary shotcrete facing. All work will be as directed by the Resident, and payment will be made under Item 502.565, "Concrete Fill".
4. All bars drilled and grouted into the existing concrete or masonry shall be secured with a product from the MaineDOT Qualified Products List for grout or adhesives prequalified for anchoring.
5. Contractor may flex the grid of #4 bars in the wall and top of shotcrete area where needed to maintain cover requirements. Any bars flexed in this way will be secured to ensure that the bars do not move during the shotcrete application.
6. Shotcrete Abutment Facing will be paid under Item 517.62, "Shotcrete Abutment Facing".
7. Reinforcing in the Shotcrete Abutment Facing shall be uncoated plain steel reinforcing and will be considered incidental to Item 517.62, "Shotcrete Abutment Facing".

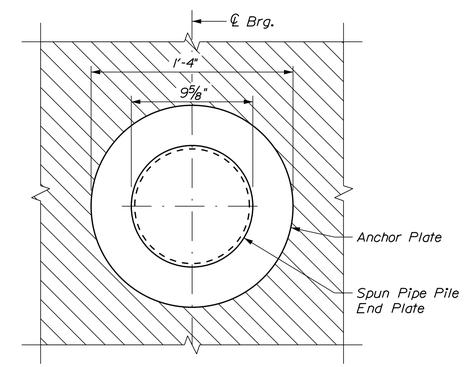

PLAN

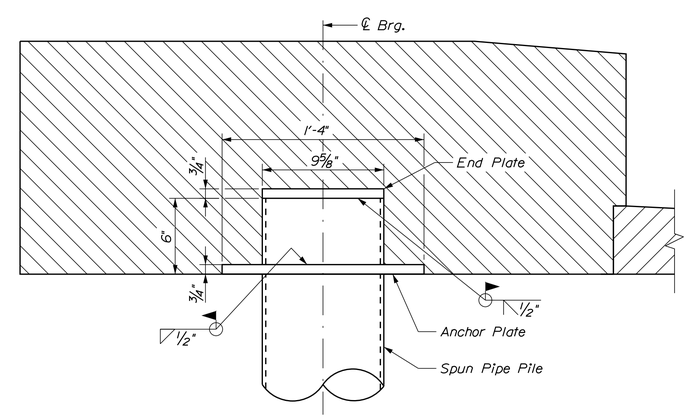

ELEVATION

SPUN PIPE PILE DETAIL

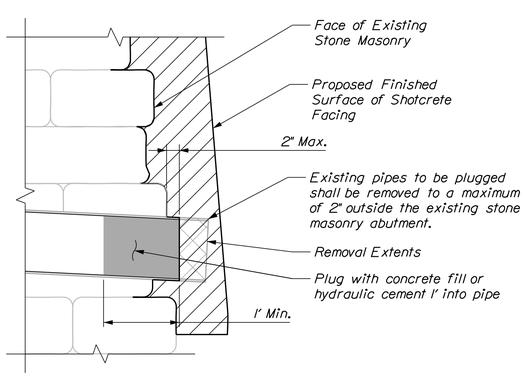

DETAIL A

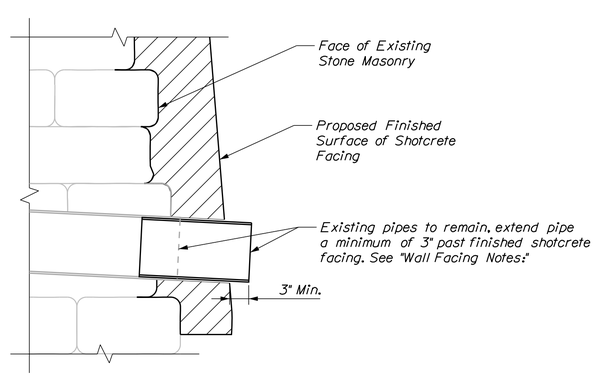

DETAIL B

STATE OF MAINE
DEPARTMENT OF TRANSPORTATION

2311600

WIN 023116.00

BRIDGE PLANS

BRIDGE NO. 3610

STATE OF MAINE DANIEL S. MYERS No. 12572 LICENSED PROFESSIONAL ENGINEER

SIGNATURE 12572

P.E. NUMBER 10/26/23

DATE

PROJ. MANAGER	JULIE BRASCH		
DESIGN-DETAILED	J.J. Legere	BY	DATE
CHECKED-REVIEWED	X. Hon	J.J. Legere	6/2023
DESIGN2-DETAILED2		D. Myers	6/2023
DESIGN3-DETAILED3			
REVISIONS 1			
REVISIONS 2			
REVISIONS 3			
REVISIONS 4			
FIELD CHANGES			

TANNERY BROOK BRIDGE
OVER TANNERY BROOK
NORWAY OXFORD COUNTY

ABUTMENT DETAILS

TYLin

SHEET NUMBER

22

OF 31

Filename: ...\MSTA\022_Abutment_Details.dgn Division: HIGHWAY Username: Date:11/8/2023

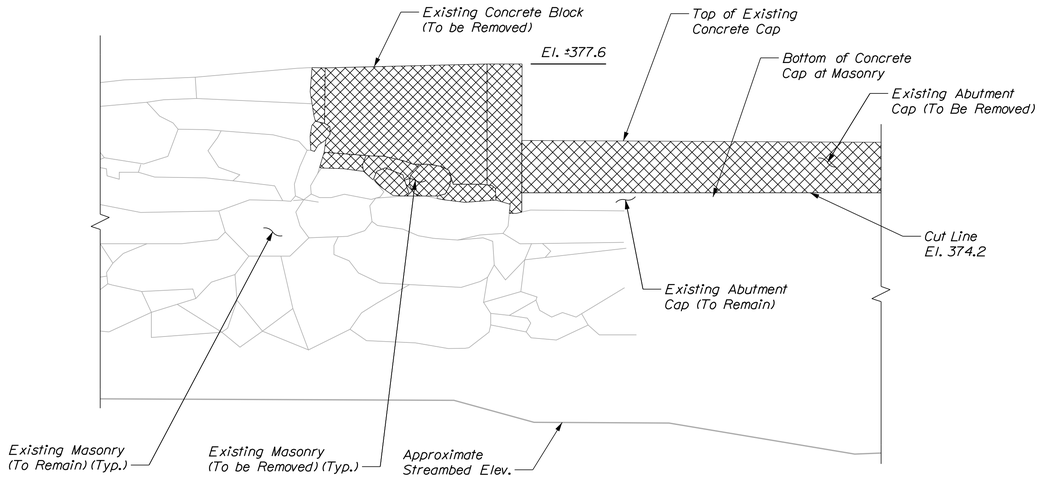

NORTHEAST WINGWALL - ABUTMENT NO. 1

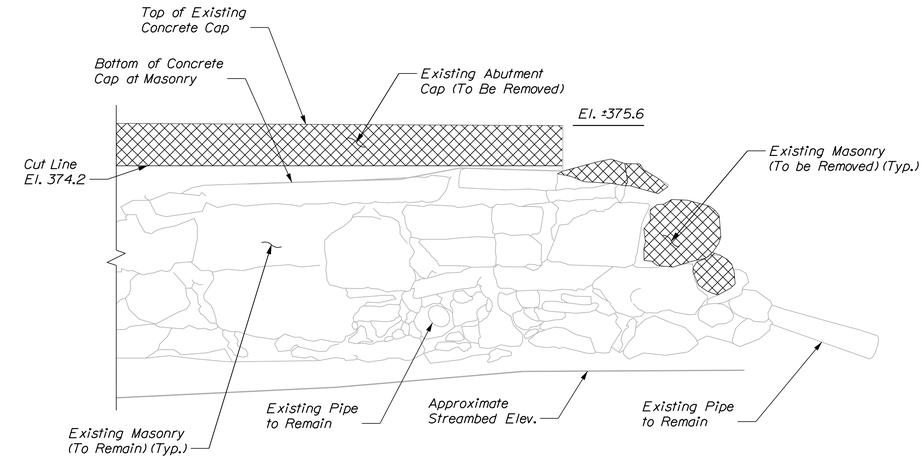

SOUTHEAST WINGWALL - ABUTMENT NO. 1

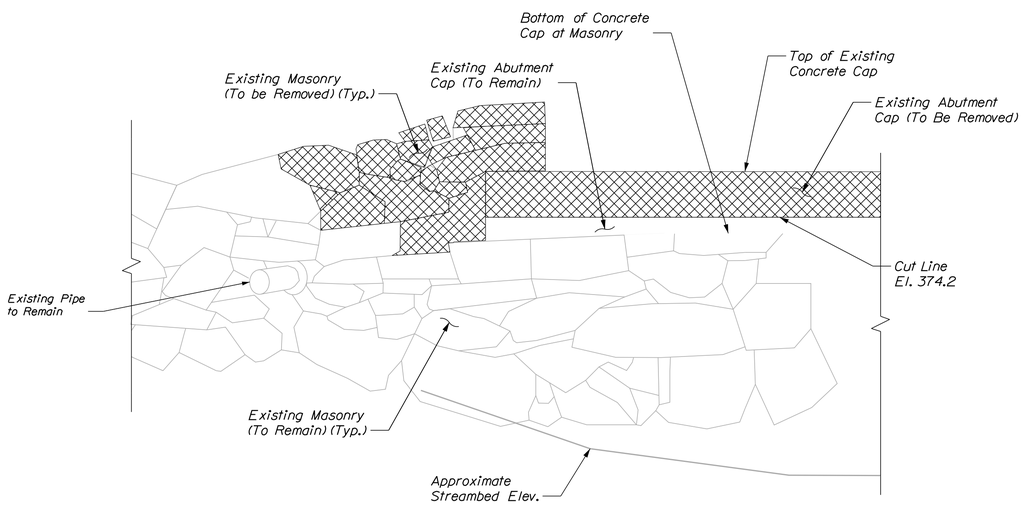

SOUTHWEST WINGWALL - ABUTMENT NO. 2

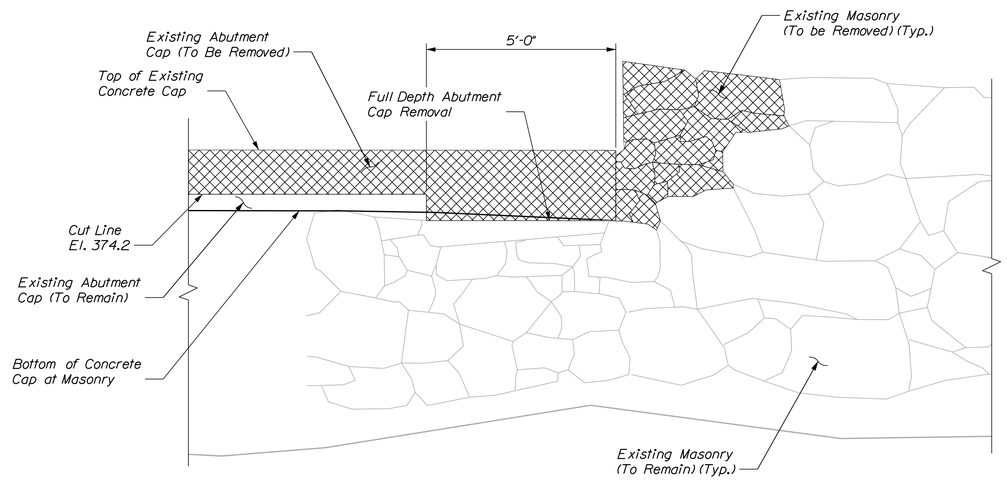

NORTHWEST WINGWALL - ABUTMENT NO. 2

NOTES:

1. The existing Abutment Cap may be removed to an elevation below El. 374.2. If the final removal elevation is greater than or equal to El. 374.0, the Abutment Pile Cap may be placed in a single pour with an increased bottom concrete cover less than or equal to 6" as approved by the Resident. If the final removal elevation is below El. 374.0, then a separate leveling pour of Concrete Fill shall be placed before the Abutment Pile Cap is placed.

2. If a leveling concrete pour is required before placing the Abutment Pile Cap, it will be considered incidental to Item 502.219, "Structural Concrete, Abutments and Retaining Walls".

STATE OF MAINE
DEPARTMENT OF TRANSPORTATION

2311600

WIN 023116.00

BRIDGE NO. 3610

BRIDGE PLANS

STATE OF MAINE
DANIEL S. MYERS
No. 12572
LICENSED
PROFESSIONAL ENGINEER

SIGNATURE 12572

P.E. NUMBER

10/26/23

DATE

		BY	DATE
PROJ. MANAGER	JULIE BRASK		
DESIGN-DETAILED	D.Myers	S.Morgan	06/23
CHECKED-REVIEWED	B.Toothaker	D.Myers	06/23
DESIGN2-DETAILED2			
DESIGN3-DETAILED3			
REVISIONS 1			
REVISIONS 2			
REVISIONS 3			
REVISIONS 4			
FIELD CHANGES			

TANNERY BROOK BRIDGE
OVER TANNERY BROOK
NORWAY OXFORD COUNTY

ABUTMENT REMOVAL LIMITS

SHEET NUMBER

23

OF 31

TYLin

Filename: ...\MSTA\023_Abutment_Removal.dgn Division: HIGHWAY Username: Date:11/8/2023

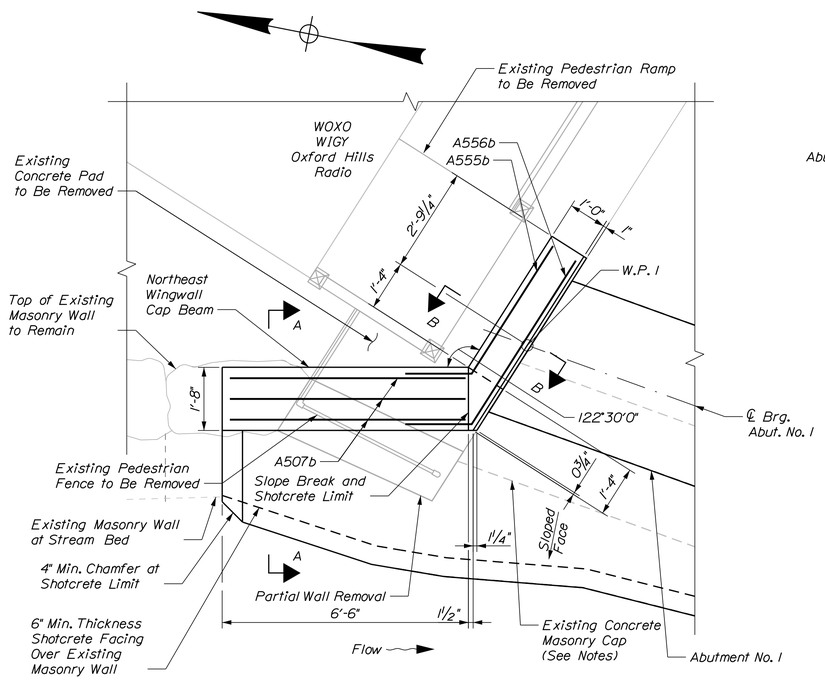

NORTHEAST WINGWALL PLAN

(Superstructure not shown for clarity)

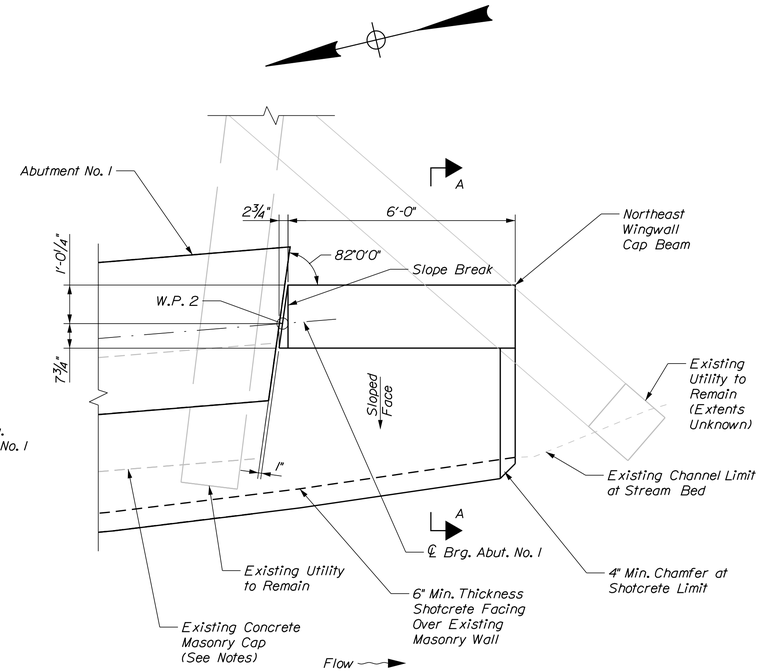

SOUTHEAST WINGWALL PLAN

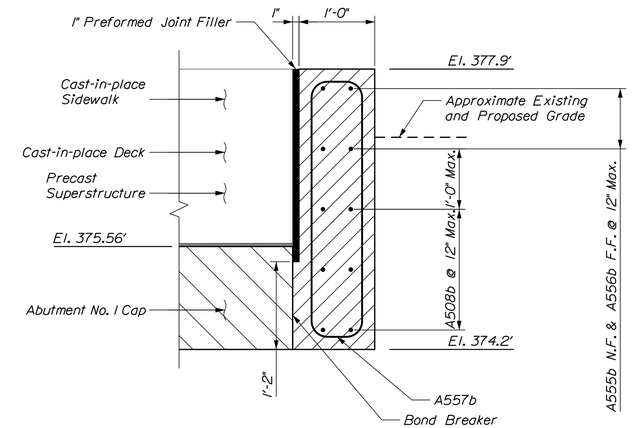

SECTION B-B

Point	Station	Offset
W.P. 1	49+94.37	33.54' RT
W.P. 2	49+80.40	28.63' LT
W.P. 3	50+06.63	28.63' LT
W.P. 4	50+20.51	33.54' RT

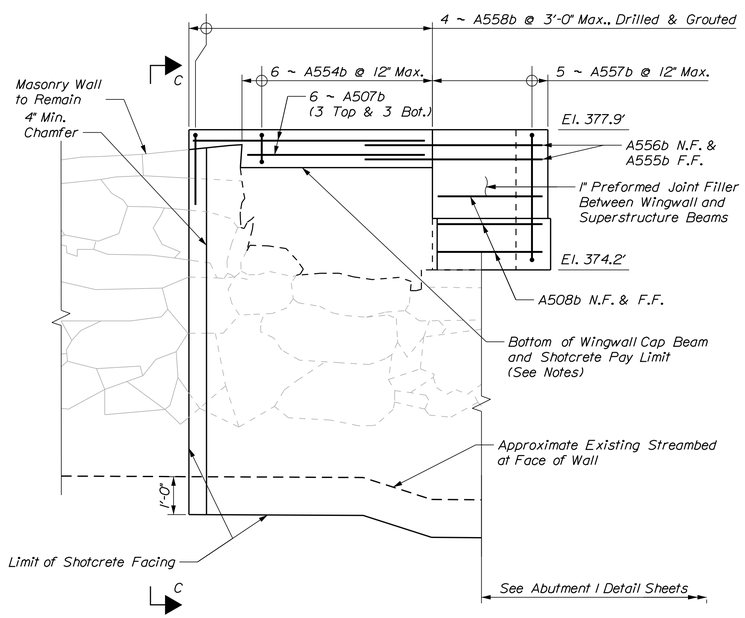

NORTHEAST WINGWALL ELEVATION

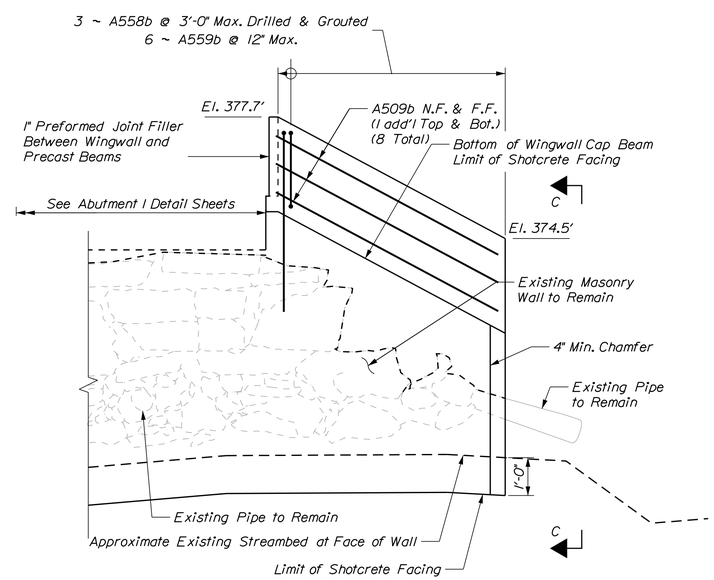

SOUTHEAST WINGWALL ELEVATION

WINGWALL NOTES:

1. For existing wall and concrete cap removal limits and details, see "Abutment Removal Limits" sheet.
2. Place shotcrete facing for abutment and adjacent wingwall in a single, continuous placement.
3. Provide a 1" thick preformed joint filler between the superstructure beams and the adjacent wingwall concrete. Payment will be considered incidental to Item 502.219, "Structural Concrete, Abutments and Retaining Walls".
4. Dowel bars shall be embedded 1'-3" minimum. Bars shall be drilled and grouted using a product from the MaineDOT Qualified Products List for Grout Materials or Epoxy and Resin Based Adhesive Bonding Systems. Dowel location and anchorage material shall be approved by The Resident.
5. Reinforcement placed in the shotcrete walls may be flexed to maintain clear cover as required. All bars shall be secured to maintain required clear cover during shotcrete placement. The grid of #4 reinforcement bars in the wall facing may be cut to fit with minimum 1'-6" laps. Materials and work will be considered incidental to Item 517.62, "Shotcrete Abutment Facing".
6. The wingwall cap beam may be cast directly on the top of masonry wall near the end of the northeast wingwall and northwest wingwall as shown in the elevation.
7. The wingwall cap beams shall be paid under Item 502.219, "Structural Concrete Abutments and Retaining Walls."
8. Large voids created by removal of existing concrete, existing masonry stones, or other obstructions will be filled with concrete fill, prior to placing preliminary shotcrete facing. All work will be as directed by the Resident, and payment will be made under Item 502.565, "Concrete Fill". Voids may also be filled with reused masonry stones, which will be paid for with hourly work items.
9. The bars in the bottom of the wingwall cap beams may be cut to fit in locations where the cap beam thickness is reduced below 12", as directed by The Resident.
10. The legs on the drilled and grouted bars may be cut to fit based on final wall removal limits.

TYLin

STATE OF MAINE
DEPARTMENT OF TRANSPORTATION

2311600

WIN 023116.00

BRIDGE PLANS

BRIDGE NO. 3610

STATE OF MAINE DANIEL S. MYERS No. 12572 LICENSED PROFESSIONAL ENGINEER

SIGNATURE 12572

P.E. NUMBER 10/26/23

DATE

		BY	DATE
PROJ. MANAGER	JULIE BRASCH		
DESIGN-DETAILED	B. Toothaker	B. Toothaker	6/2023
CHECKED-REVIEWED	D. Myers	D. Myers	6/2023
DESIGN2-DETAILED2			
DESIGN3-DETAILED3			
REVISIONS 1			
REVISIONS 2			
REVISIONS 3			
REVISIONS 4			
FIELD CHANGES			

TANNERY BROOK BRIDGE
OVER TANNERY BROOK
NORWAY OXFORD COUNTY

WINGWALL DETAILS 1

SHEET NUMBER

24

OF 31

Filename: ...\024_Wingwall_Details_1.dgn Division: HIGHWAY Username: Date:11/8/2023

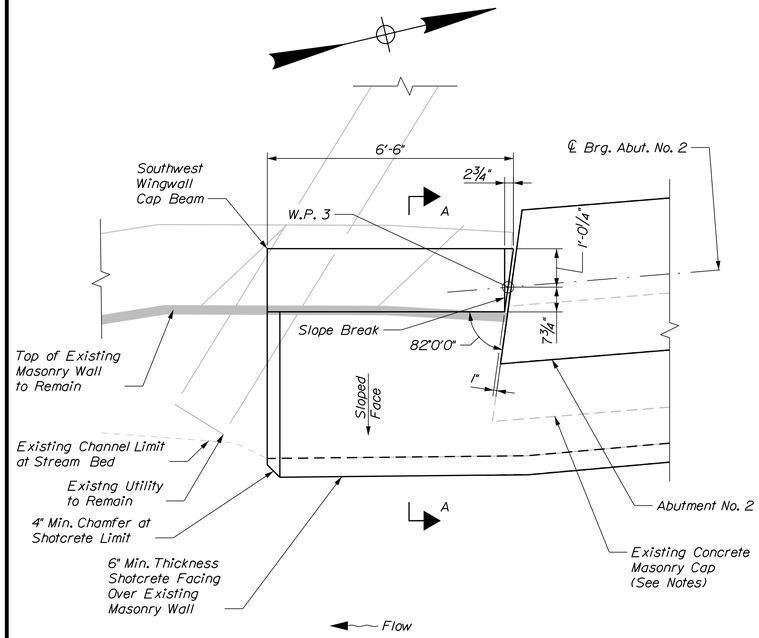

SOUTHWEST WINGWALL PLAN

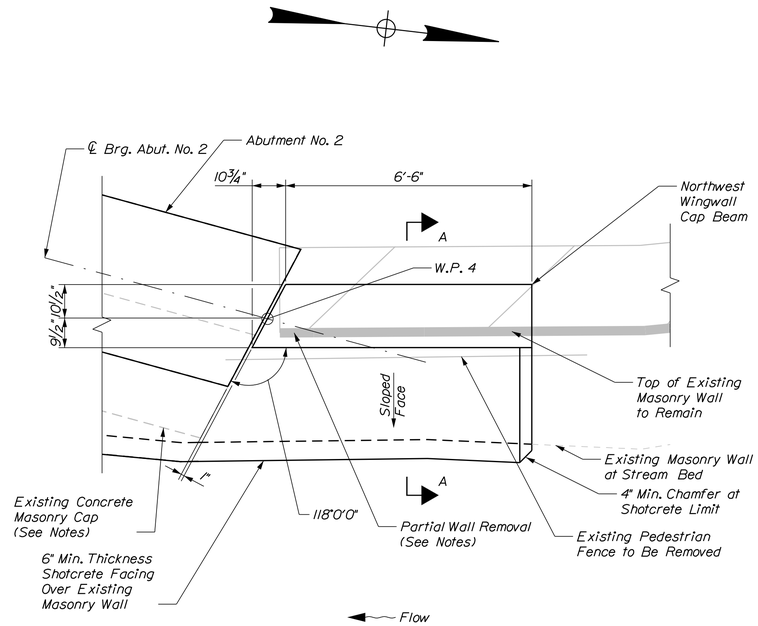

NORTHWEST WINGWALL PLAN

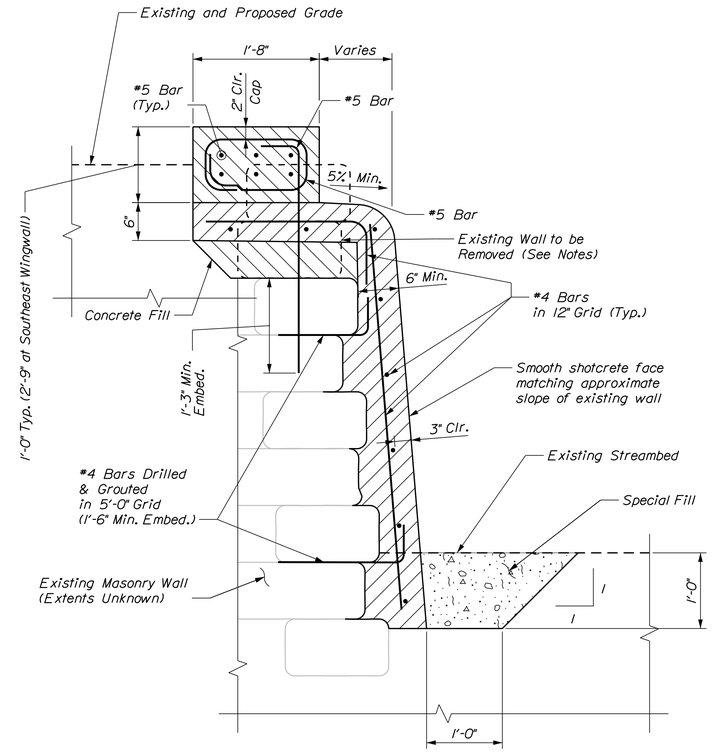

SECTION A-A

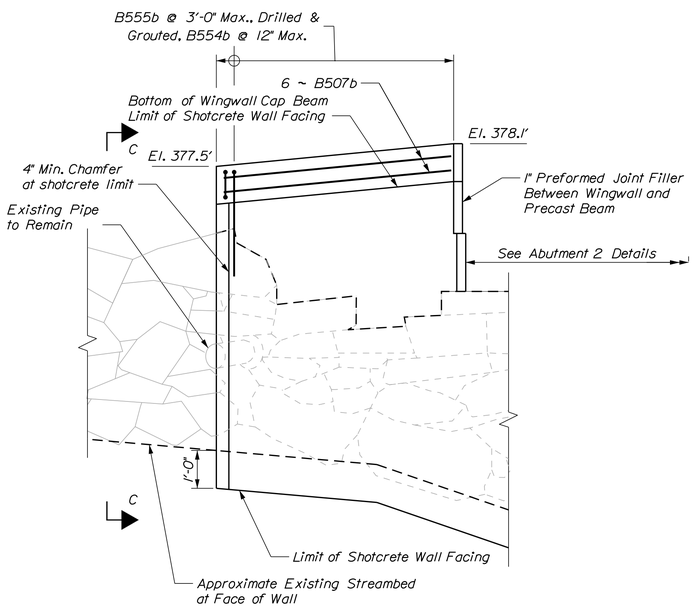

SOUTHWEST WINGWALL ELEVATION

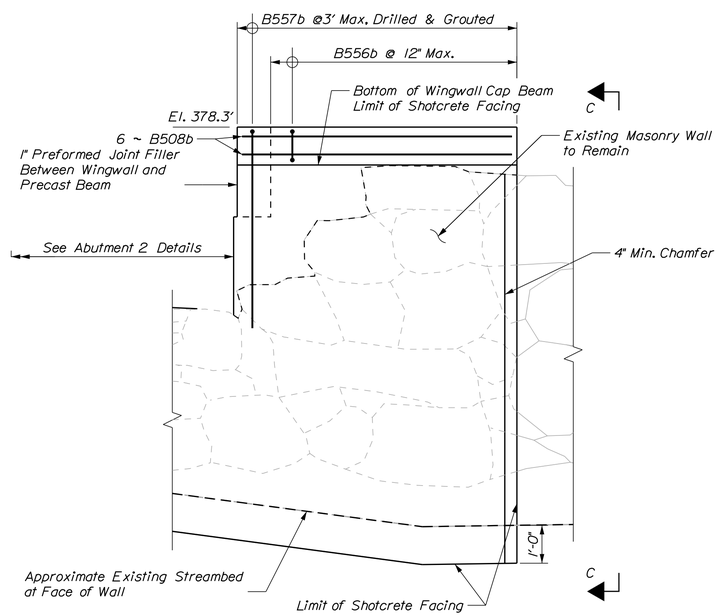

NORTHWEST WINGWALL ELEVATION

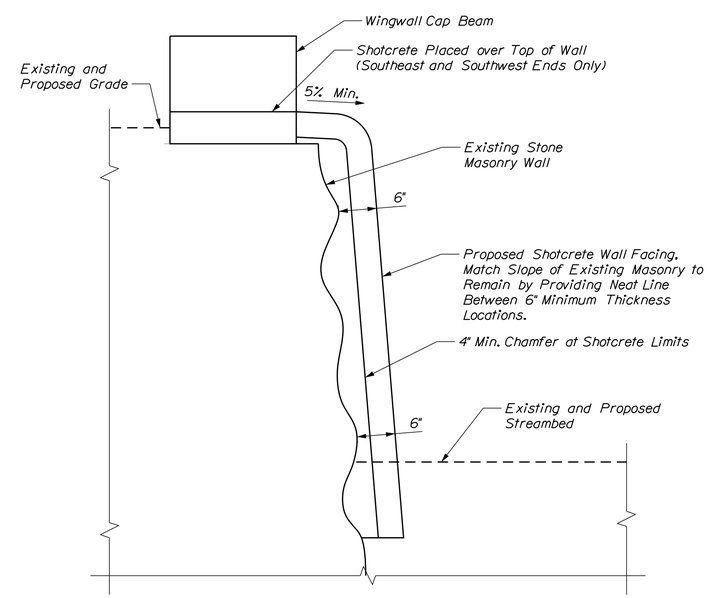

VIEW C-C

Northwest and Southeast Wingwall Opposite Hand

TYLin

STATE OF MAINE
DEPARTMENT OF TRANSPORTATION

2311600

WIN 023116.00

BRIDGE PLANS

BRIDGE NO. 3610

STATE OF MAINE DANIEL S. MYERS No. 12572 LICENSED PROFESSIONAL ENGINEER

SIGNATURE 12572

P.E. NUMBER

10/26/23

DATE

PROJ. MANAGER	JULIE BRASCK	BY	DATE
DESIGN-DETAILED	B. Toothaker	B. Toothaker	6/2023
CHECKED-REVIEWED	D.Myers	D.Myers	6/2023
DESIGN2-DETAILED2			
DESIGN3-DETAILED3			
REVISIONS 1			
REVISIONS 2			
REVISIONS 3			
REVISIONS 4			
FIELD CHANGES			

TANNERY BROOK BRIDGE
OVER TANNERY BROOK
NORWAY OXFORD COUNTY

WINGWALL DETAILS 2

SHEET NUMBER

25

OF 31

Date:11/8/2023 Username: Division: HIGHWAY Filename: ...\025_Wingwall_Details_2.dgn

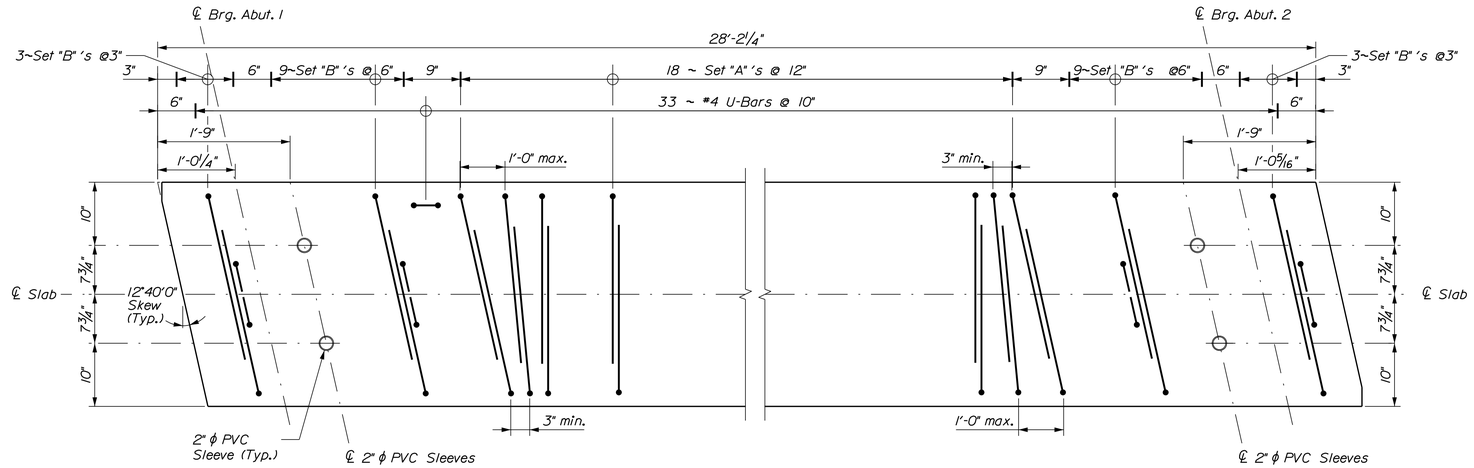

PRECAST SLAB (AASHTO TYPE S36-12)

Showing Interior Slab Layout for Set A and B Stirrups along with shear reinforcement.
For more information on additional reinforcement, dimensioning, spacing and clearances see Standard Details, Section 535 - Precast Superstructure.

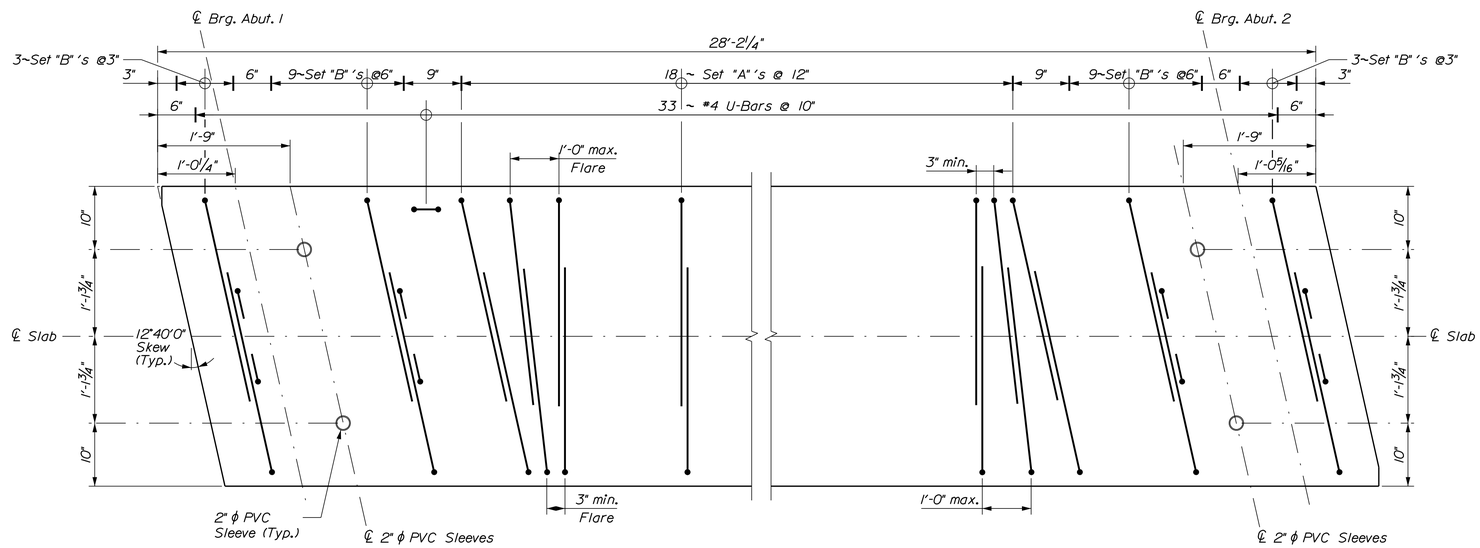

PRECAST SLAB (AASHTO TYPE S48-12)

Showing Interior Slab Layout for Set A and B Stirrups along with shear reinforcement
For more information on additional reinforcement, dimensioning, spacing and clearances see Standard Details, Section 535 - Precast Superstructure. (Exterior Slab Similar - See Standard Detail 535(16) for additional deck shear reinforcement)

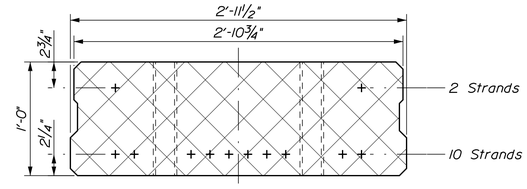

TYPICAL INTERIOR SLAB SECTION (AASHTO TYPE S36-12)

Showing Strand Layout

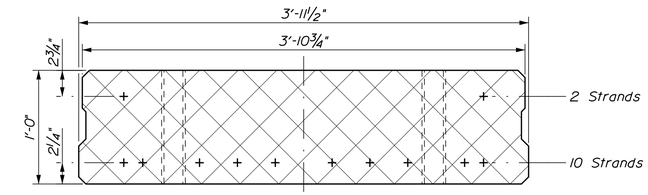

TYPICAL INTERIOR SLAB SECTION (AASHTO TYPE S48-12)

Showing Strand Layout

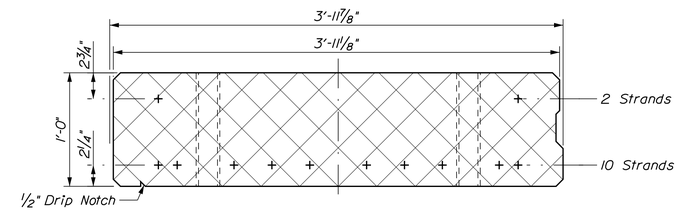

TYPICAL EXTERIOR SLAB SECTION (AASHTO TYPE S48-12)

Showing Strand Layout. S1 shown, S16 opposite hand

+ Strand Fully Bonded

For more information on additional rebar, dimensioning, spacing and clearances, See Standard Details, Section 535 - Precast Superstructure

PRECAST CONCRETE SUPERSTRUCTURE NOTES:

1. Prestressing strands shall be 0.6 inch diameter. The tensioning force is 44 kips per prestressing strand.
2. The top surface of the prestressed beams shall be raked to a surface roughness of ±¼ inch, except at locations corresponding to the blocking points. At these locations a flattened area of sufficient size shall be left to facilitate taking elevations for setting of slab elevations.
3. Do not drill holes or use powder actuated tools on the prestressed beams without the approval of the Fabrication Engineer.
4. Reinforcing steel shall have a minimum concrete cover of 2 inches unless otherwise noted.
5. Transverse post-tensioning is not required.
6. All dimensions and details shall meet slab type S36-12 & S48-12 per Standard Detail Section 535 unless otherwise noted.
7. Lifting loops shall be a maximum of 2 feet from beam end.
8. Reinforcing bars used in the precast slabs shall be low carbon chromium.

STATE OF MAINE
DEPARTMENT OF TRANSPORTATION

2311600

WIN 023116.00

BRIDGE PLANS

BRIDGE NO. 3610

STATE OF MAINE DANIEL S. MYERS No. 12572 LICENSED PROFESSIONAL ENGINEER

SIGNATURE 12572

P.E. NUMBER

10/26/23

DATE

PROJ. MANAGER	JULIE BRASCH		
DESIGN-DETAILED	J.J.Legere	J.J.Legere	6/2023
CHECKED-REVIEWED	D.Myers	D.Myers	6/2023
DESIGN2-DETAILED2			
DESIGN3-DETAILED3			
REVISIONS 1			
REVISIONS 2			
REVISIONS 3			
REVISIONS 4			
FIELD CHANGES			

TANNERY BROOK BRIDGE
OVER TANNERY BROOK
NORWAY OXFORD COUNTY

PRECAST SLAB DETAILS

TYLin

SHEET NUMBER

26

OF 31

Filename: ...\026_Precast_Slab_Details.dgn Division: HIGHWAY Username: Date:11/8/2023

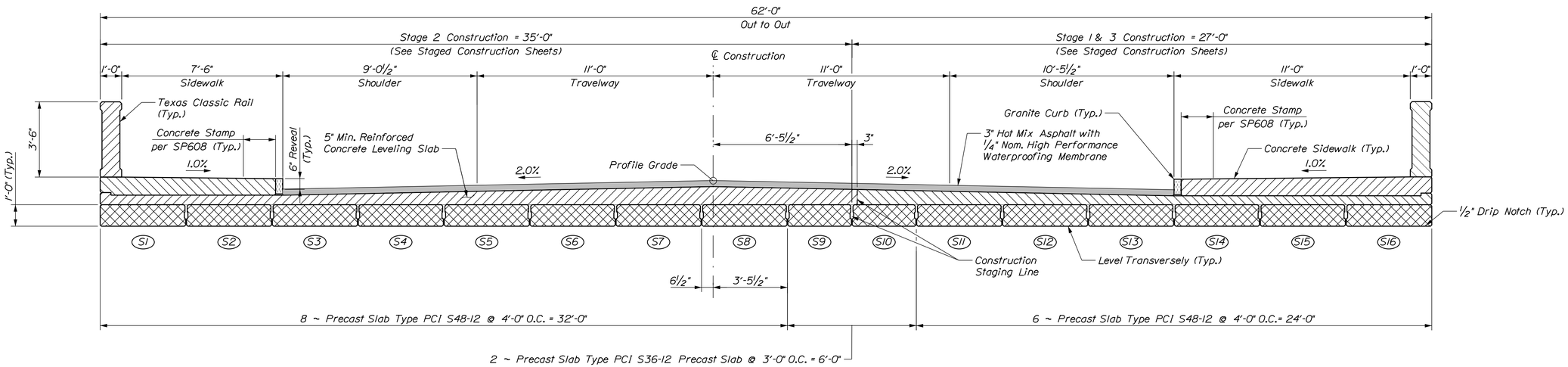

NOTE:
See "SUPERSTRUCTURE NOTES" on "SUPERSTRUCTURE DETAILS" sheet.

TRANSVERSE SECTION
(Looking Up-Station)

Date:11/8/2023
Username:
Division: HIGHWAY
Filename: ...\027_Transverse_Section.dgn

STATE OF MAINE
DEPARTMENT OF TRANSPORTATION

2311600

WIN 023116.00

BRIDGE NO. 3610

BRIDGE PLANS

STATE OF MAINE
DANIEL S. MYERS
No. 12572
LICENSED
PROFESSIONAL ENGINEER

SIGNATURE 12572
P.E. NUMBER
10/26/23
DATE

PROJ. MANAGER	JULIE BRASCK		
DESIGN-DETAILED	J. Legere	BY	DATE
CHECKED-REVIEWED	D. Myers	J. Legere	8/2022
DESIGN2-DETAILED2		D. Myers	8/2022
DESIGN3-DETAILED3			
REVISIONS 1			
REVISIONS 2			
REVISIONS 3			
REVISIONS 4			
FIELD CHANGES			

TANNERY BROOK BRIDGE
OVER TANNERY BROOK
NORWAY OXFORD COUNTY

TRANSVERSE SECTION

TYLin

SHEET NUMBER
27
OF 31

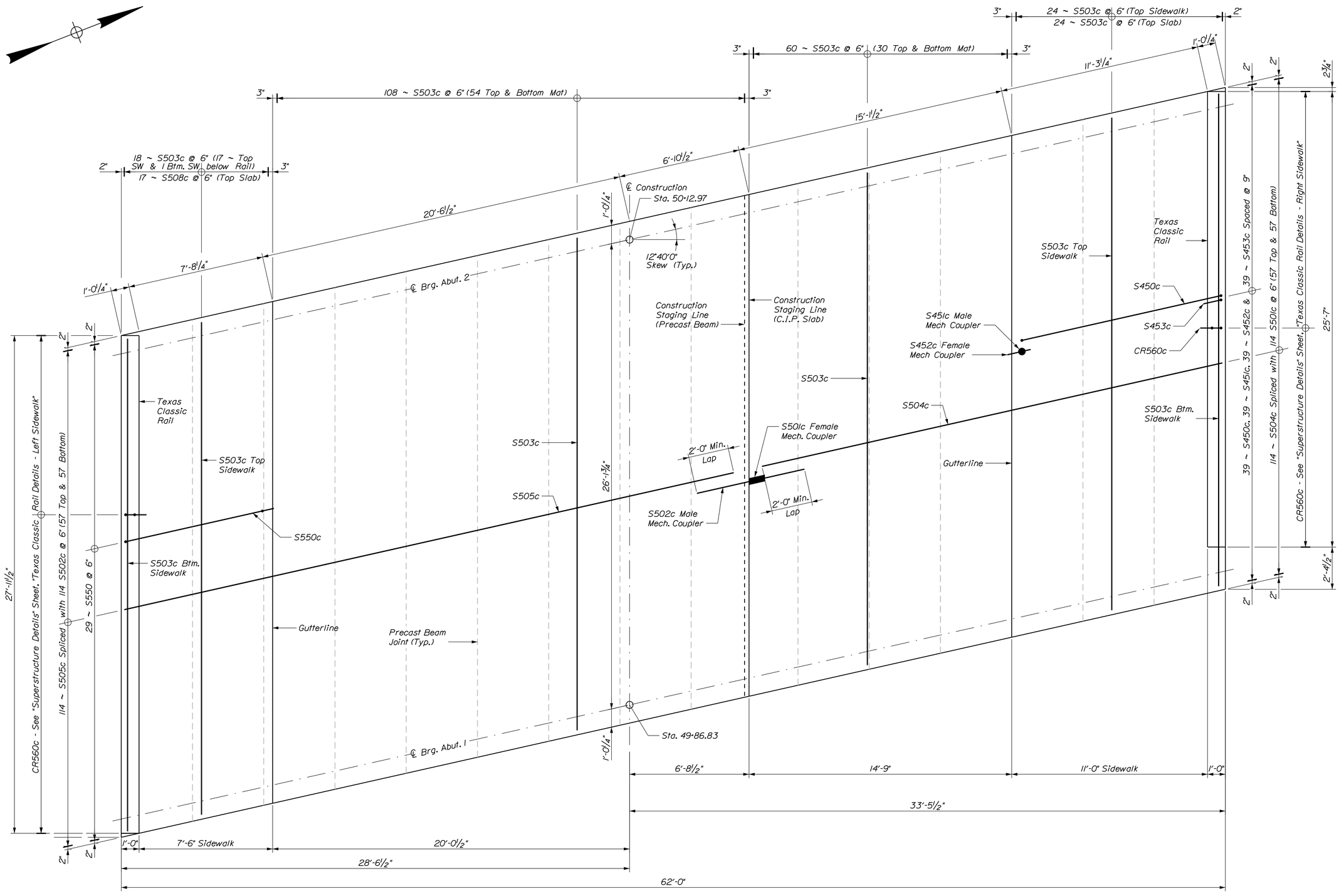

SUPERSTRUCTURE PLAN

*See "Superstructure Notes:" on "Superstructure Details" sheet.

TYLin

STATE OF MAINE
DEPARTMENT OF TRANSPORTATION

2311600

WIN 023116.00

BRIDGE PLANS

BRIDGE NO. 3610

DANIEL S. MYERS No. 12572 LICENSED PROFESSIONAL ENGINEER STATE OF MAINE

P.E. NUMBER 12572

SIGNATURE

10/26/23

DATE

PROJ. MANAGER	JULIE BRASK	BY	DATE
DESIGN-DETAILED	J.LEGERE	J.LEGERE	6/9/2023
CHECKED-REVIEWED	D.MYERS	D.MYERS	6/9/2023
DESIGN2-DETAILED2			
DESIGN3-DETAILED3			
REVISIONS: 1			
REVISIONS: 2			
REVISIONS: 3			
REVISIONS: 4			
FIELD CHANGES			

TANNERY BROOK BRIDGE
OVER TANNERY BROOK
NORWAY OXFORD COUNTY

SUPERSTRUCTURE PLAN

SHEET NUMBER

28

OF 31

Filename: ...\028_Superstructure_Plan.dgn Division: HIGHWAY Username: Date:11/8/2023

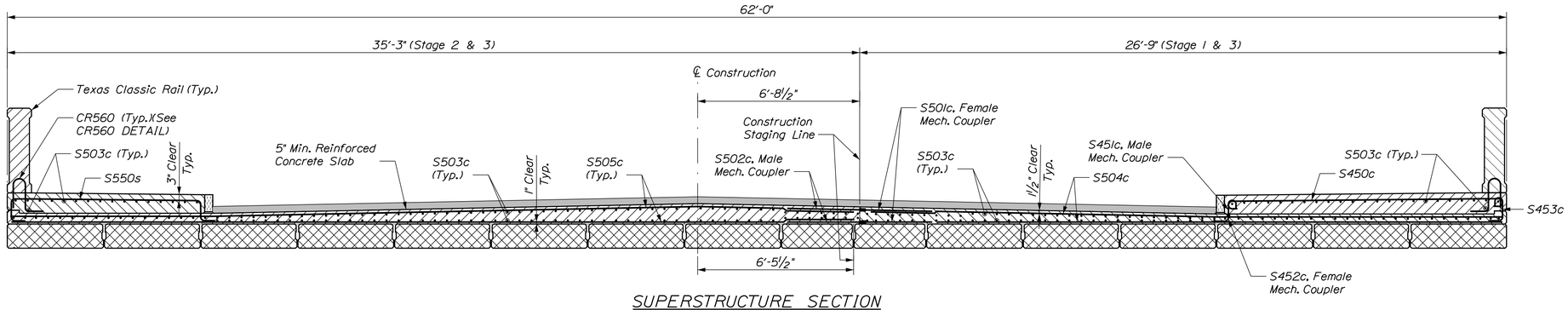

SUPERSTRUCTURE SECTION

(Looking Up-Station)

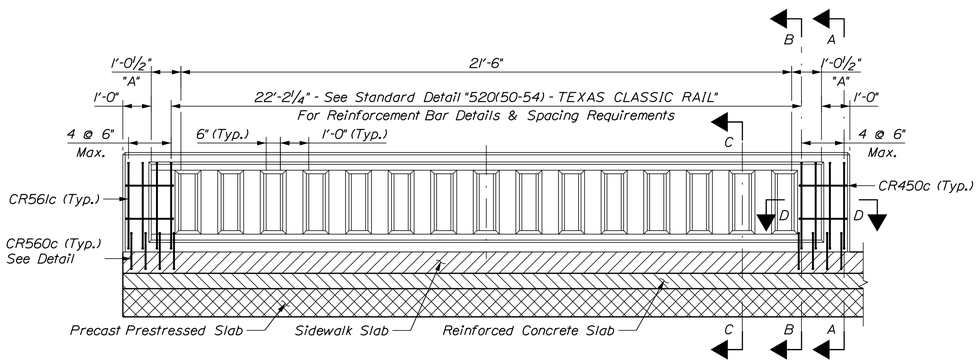

TEXAS CLASSIC RAIL DETAIL - RIGHT SIDEWALK

(Layout and Bar Adjustments)

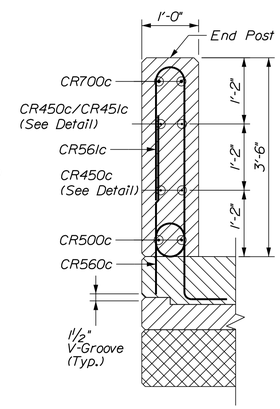

SECTION A-A

Reinforcing Layout. See Standard Detail 526(54) for more information

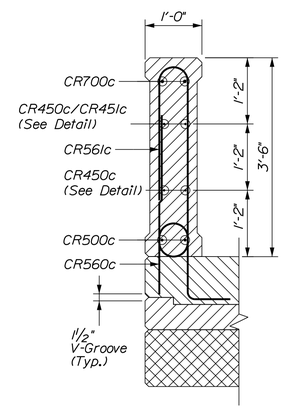

SECTION B-B

Reinforcing Layout. See Standard Detail 526(54) for more information

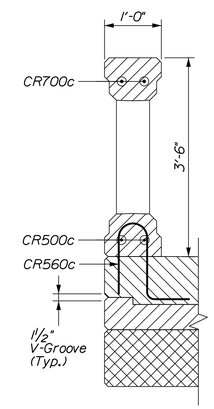

SECTION C-C

Reinforcing Layout. See Standard Detail 526(54) for more information

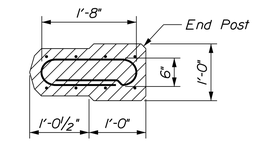

SECTION D-D

Additional CR450c Bar not part of Texas Classic Rail Standard Detail 526(54)

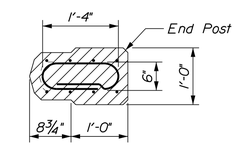

SECTION E-E

Additional CR451c Bar not part of Texas Classic Rail Standard Detail 526(54)

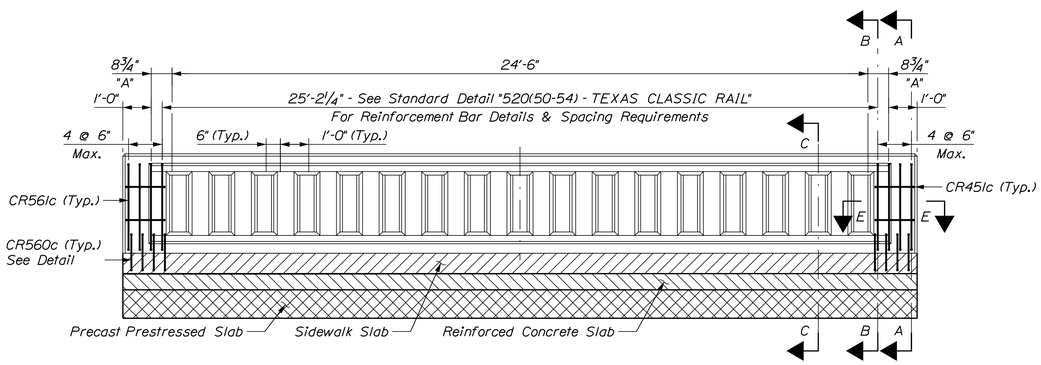

TEXAS CLASSIC RAIL DETAIL - RIGHT SIDEWALK

(Layout and Bar Adjustments)

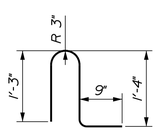

CR560c DETAIL

Bar CR560 from Standard Detail, Texas Classic Rail 526(54) shall be modified as shown

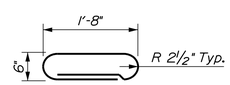

CR450c DETAIL

Additional CR450c bar not part of Texas Classic Rail Standard Detail 526(54)

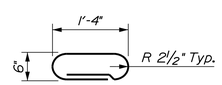

CR451c DETAIL

Additional CR451c bar not part of Texas Classic Rail Standard Detail 526(54)

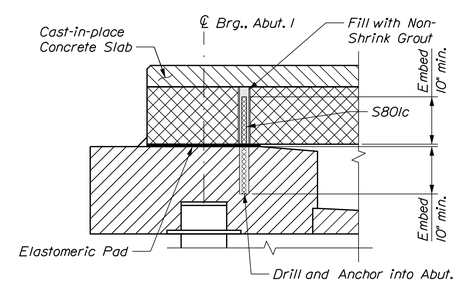

SUPERSTRUCTURE ANCHORAGE DETAIL

(Abut. 1 Shown, Abut. 2 Similar)

SUPERSTRUCTURE NOTES:

1. The deck thickness shall be adjusted in accordance with Special Provision Section 535, Precast, Prestressed Concrete Superstructure, Camber.
2. Form a one inch V-groove on the fascias at the horizontal joint between the sidewalk and slab.
3. Reinforcing steel shall have a minimum concrete cover of 2 inches unless otherwise noted.
4. The cast-in-place superstructure slab concrete shall be placed continuously and shall be kept plastic until the entire placement has been made.
5. Mortar for bedding and for joints in the granite curb shall contain an approved non-shrink additive.
6. The steel reinforcement in the Texas Classic Rail shall be low-carbon chromium reinforcement.
7. Elastomeric Bearing Pads shall be 2'-0" in plan and ½" thick.
8. The elastomer shall have a shear modulus of 95 psi.
9. Elastomeric Bearing Pads shall conform to the requirements of the latest edition of the AASHTO LRFD Bridge Construction Specification, Section 18.2.
10. Elastomeric Bearing Pads & Non-shrink Grout will not be paid for directly but will be considered incidental to related Contract Items. No separate payment will be made.
11. Non-shrink grout used in precast beam anchorages shall be from the MaineDOT QPL for Grout Materials.

TYLin

STATE OF MAINE
DEPARTMENT OF TRANSPORTATION

2311600

WIN 023116.00

BRIDGE PLANS

BRIDGE NO. 3610

STATE OF MAINE DANIEL S. MYERS No. 12572 LICENSED PROFESSIONAL ENGINEER

SIGNATURE 12572

P.E. NUMBER

10/26/23

DATE

		BY	DATE
PROJ. MANAGER	JULIE BRASK		
DESIGN-DETAILED	J. Legere	J. Legere	8/2022
CHECKED-REVIEWED	D. Myers	D. Myers	8/2022
DESIGN2-DETAILED2			
DESIGN3-DETAILED3			
REVISIONS 1			
REVISIONS 2			
REVISIONS 3			
REVISIONS 4			
FIELD CHANGES			

TANNERY BROOK BRIDGE
OVER TANNERY BROOK
NORWAY OXFORD COUNTY

SUPERSTRUCTURE DETAILS

SHEET NUMBER

29

OF 31

Filename: ...\029_Superstructure_Details.dgn Division: HIGHWAY Username: Date:11/8/2023

STRAIGHT BARS

MARK	QTY.	LENGTH	LOCATION
			Abutment No. 1
A501c	6	28'-3"	HORIZ. PILE CAP, BOTTOM
A502c	6	4'-0"	HORIZ. PILE CAP, BOTTOM (FEMALE COUPLER)
A503c	4	8'-0"	HORIZ. PILE CAP, BOTTOM
A504c	6	34'-5"	HORIZ. PILE CAP, BOTTOM
A505c	6	4'-0"	HORIZ. PILE CAP, BOTTOM (MALE COUPLER)
A506c	5	8'-0"	HORIZ. PILE CAP, BOTTOM
A507b	6	6'-2"	HORIZ. NE WINGWALL CAP BEAM
A508b	6	5'-1"	HORIZ. NW WINGWALL CAP BEAM
A509b	8	6'-5"	HORIZ. SE WINGWALL CAP BEAM
A601c	7	27'-11"	HORIZ. PILE CAP, TOP
A602c	7	5'-0"	HORIZ. PILE CAP, TOP (FEMALE COUPLER)
A603c	7	34'-1"	HORIZ. PILE CAP, TOP
A604c	7	5'-0"	HORIZ. PILE CAP, TOP (MALE COUPLER)
AS501b	9	14'-7"	HORIZ. APPROACH SLAB
AS502b	9	4'-0"	HORIZ. APPROACH SLAB (FEMALE COUPLER)
AS503b	9	25'-2"	HORIZ. APPROACH SLAB
AS504b	9	4'-0"	HORIZ. APPROACH SLAB (MALE COUPLER)
AS801b	17	7'-4"	HORIZ. APPROACH SLAB
AS802b	28	7'-4"	HORIZ. APPROACH SLAB
			Abutment No. 2
B501c	6	28'-3"	HORIZ. PILE CAP, BOTTOM
B502c	6	4'-0"	HORIZ. PILE CAP, BOTTOM (FEMALE COUPLER)
B503c	4	8'-0"	HORIZ. PILE CAP, BOTTOM
B504c	6	34'-5"	HORIZ. PILE CAP, BOTTOM
B505c	6	4'-0"	HORIZ. PILE CAP, BOTTOM (MALE COUPLER)
B506c	5	8'-0"	HORIZ. PILE CAP, BOTTOM
B507b	6	6'-2"	HORIZ. SW WINGWALL CAP BEAM
B508b	6	7'-0"	HORIZ. NW WINGWALL CAP BEAM
B601c	7	27'-11"	HORIZ. PILE CAP, TOP
B602c	7	5'-0"	HORIZ. PILE CAP, TOP (FEMALE COUPLER)
B603c	7	34'-1"	HORIZ. PILE CAP, TOP
B604c	7	5'-0"	HORIZ. PILE CAP, TOP (MALE COUPLER)
BS501b	9	15'-5"	HORIZ. APPROACH SLAB
BS502b	9	4'-0"	HORIZ. APPROACH SLAB (FEMALE COUPLER)
BS503b	9	24'-3"	HORIZ. APPROACH SLAB
BS504b	9	4'-0"	HORIZ. APPROACH SLAB (MALE COUPLER)
BS801b	18	7'-4"	HORIZ. APPROACH SLAB
BS802b	27	7'-4"	HORIZ. APPROACH SLAB
			Superstructure Slab
S501c	114	3'-0"	TRANSVERSE SLAB FEMALE COUPLER
S502c	114	3'-0"	TRANSVERSE SLAB MALE COUPLER
S503c	252	27'-10"	LONGITUDINAL SLAB TOP & BOTTOM, SW TOP
S504c	114	26'-3"	TRANSVERSE SLAB TOP & BOTTOM
S505c	114	35'-0"	TRANSVERSE SLAB TOP & BOTTOM
S801c	64	1'-8"	SUPERSTRUCTURE ANCHOR

BENT BARS

MARK	QTY.	LENGTH	TYPE	A	B	C	D	E	F	G/J	H	K	O	R	LOCATION
							Abutment No. 1								
A550c	188	1'-10"	S	0"	6"	10"	6"	-	-	0"	-	-	-	-	PILE CAP
A551c	1	7'-2"	S	0"	3'-3"	8"	3'-3"	-	-	0"	-	-	-	-	PILE CAP, FASCIA
A552c	1	7'-1"	S	0"	3'-3"	7"	3'-3"	-	-	0"	-	-	-	-	PILE CAP, FASCIA
A553c	224	1'-9"	S	0"	6"	9"	6"	-	-	0"	-	-	-	-	PILE CAP
A554b	6	4'-10"	HB	6"	1'-4"	7"	1'-4"	7"	-	6"	-	-	-	-	NE WINGWALL CAP BEAM
A555b	2	7'-8"	V	-	-	-	3'-7"	4'-1"	-	-	3'-6"	-	-	-	NE WINGWALL CAP BEAM
A556b	2	8'-8"	V	-	-	-	3'-7"	5'-1"	-	-	4'-4"	-	-	-	NE WINGWALL CAP BEAM
A557b	5	8'-10"	HB	6"	8"	3'-3"	8"	3'-3"	-	6"	-	-	-	-	NE WINGWALL CAP BEAM
A558b	4	7'-4"	L	6'-0"	1'-4"	-	-	-	-	-	-	-	-	-	NE WINGWALL CAP BEAM
A559b	6	8'-4"	HB	6"	1'-4"	2'-4"	1'-4"	2'-4"	-	6"	-	-	-	-	SE WINGWALL CAP BEAM
A560b	3	7'-4"	L	6'-0"	1'-4"	-	-	-	-	-	-	-	-	-	SE WINGWALL CAP BEAM
A650c	94	8'-2"	S	0"	3'-8"	10"	3'-8"	-	-	0"	-	-	-	-	PILE CAP
A651c	112	8'-1"	S	0"	3'-8"	9"	3'-8"	-	-	0"	-	-	-	-	PILE CAP
AS650b	17	5'-9"	C	8"	5'-1"	0"	-	-	-	-	-	-	-	-	APPROACH SLAB
AS651b	28	5'-9"	C	8"	5'-1"	0"	-	-	-	-	-	-	-	-	APPROACH SLAB
							Abutment No. 2								
B550c	188	2'-2"	S	0"	6"	1'-2"	6"	-	-	0"	-	-	-	-	PILE CAP
B551c	1	7'-6"	S	0"	3'-3"	1'-0"	3'-3"	-	-	0"	-	-	-	-	PILE CAP, FASCIA
B552c	1	7'-5"	S	0"	3'-3"	11"	3'-3"	-	-	0"	-	-	-	-	PILE CAP, FASCIA
B553c	224	2'-1"	S	0"	6"	1'-1"	6"	-	-	0"	-	-	-	-	PILE CAP
B554b	8	4'-10"	HB	6"	1'-4"	7"	1'-4"	7"	-	6"	-	-	-	-	SW WINGWALL CAP BEAM
B555b	4	7'-4"	L	6'-0"	1'-4"	-	-	-	-	-	-	-	-	-	SW WINGWALL CAP BEAM
B556b	8	4'-8"	HB	6"	1'-3"	7"	1'-3"	7"	-	6"	-	-	-	-	NW WINGWALL CAP BEAM
B557b	4	7'-4"	L	6'-0"	1'-4"	-	-	-	-	-	-	-	-	-	NW WINGWALL CAP BEAM
B650c	94	8'-2"	S	0"	3'-8"	10"	3'-8"	-	-	0"	-	-	-	-	PILE CAP
B651c	112	8'-5"	S	0"	3'-8"	1'-1"	3'-8"	-	-	0"	-	-	-	-	PILE CAP
BS650b	18	5'-9"	C	8"	5'-1"	0"	-	-	-	-	-	-	-	-	APPROACH SLAB
BS651b	27	5'-9"	C	8"	5'-1"	0"	-	-	-	-	-	-	-	-	APPROACH SLAB
							Superstructure Slab								
S450c	39	12'-7"	C	6"	11'-7"	6"	-	-	-	-	-	-	-	-	TRANSVERSE SIDEWALK
S451c	39	1'-1"	CM	6"	6"	-	-	-	-	-	-	-	-	-	SIDEWALK MALE COUPLER
S452c	39	0'-10"	CF	4"	6"	-	-	-	-	-	-	-	-	-	SLAB FEMALE COUPLER
S453c	39	2'-0"	PC	6"	11"	-	-	-	-	6"	-	-	-	-	SIDEWALK TIE
S550c	29	11'-1"	S	7"	11"	8'-0"	10"	-	-	7"	-	-	-	-	TRANSVERSE SIDEWALK

TYPE - BENDING DIAGRAMS

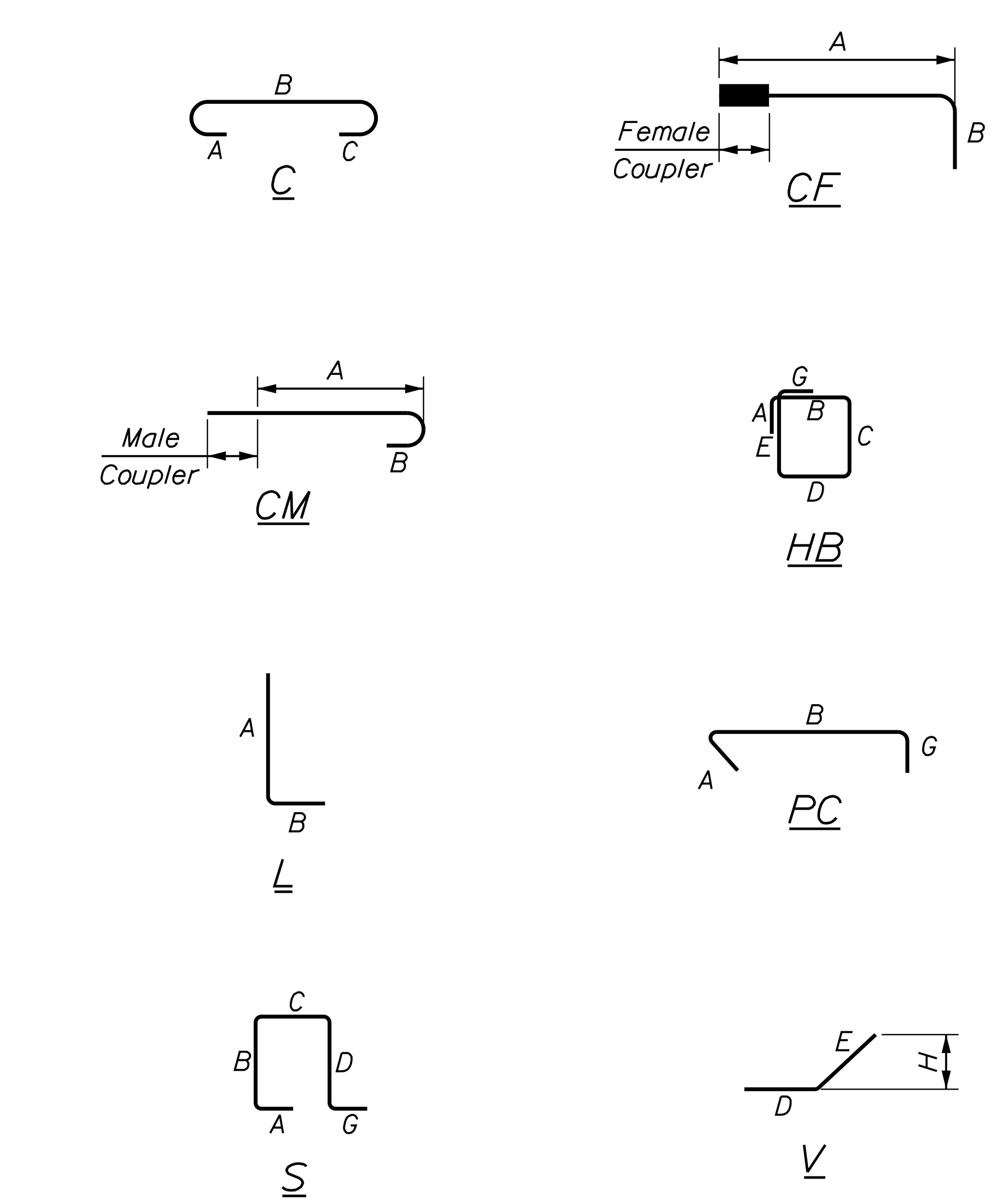

All dimensions are out-to-out of bar.

Bending details and hooks shall conform to the recommendations of the current revision of ACI Standard 315 and ACI Standard 318.

Plain Reinforcing Steel: ASTM A 615, Grade 60
Stainless Steel Reinforcing: ASTM A955, Grade 75
Glass Fiber Reinforced Polymer: ASTM D7957
Low-Carbon Chromium Steel: ASTM A1035, Type CS, Grade 100

GENERAL NOTES

1. The first digit following the letter(s) of the mark indicate the size of the bar:

Mark "A502" = bar size #5
Mark "P805" = bar size #8
Mark "S650" = bar size #6
Mark "P1404" = bar size #14

2. The lower case letter following the bar number indicates the material of the bar:

"A502b", b = (Black) Plain Steel
"A550s", s = Stainless Steel
"S500p", p = Glass Fiber Reinforced Polymer
"P510c", c = Low-Carbon Chromium Steel

TYLin

STATE OF MAINE
DEPARTMENT OF TRANSPORTATION
2311600
WIN 023116.00
BRIDGE NO. 3610

DANIEL S. MYERS No. 12572 — STATE OF MAINE LICENSED PROFESSIONAL ENGINEER
SIGNATURE
P.E. NUMBER 12572
DATE 10/26/23

		BY	DATE
PROJ. MANAGER	JULIE BRASK		
DESIGN-DETAILED	P. Chalgeri	P. Chalgeri	10/2023
CHECKED-REVIEWED	J. Legere	J. Legere	10/2023
DESIGN2-DETAILED2			
DESIGN3-DETAILED3			
REVISIONS 1			
REVISIONS 2			
REVISIONS 3			
REVISIONS 4			
FIELD CHANGES			

TANNERY BROOK BRIDGE
OVER TANNERY BROOK
NORWAY OXFORD COUNTY

REINFORCING SCHEDULE

Date:11/8/2023 Username: Division: HIGHWAY Filename: ...\BRIDGE\MSTA\030_Reinf_Schd.dgn

PLAN LEGEND

Town, County, State	New R/W Along Existing R/W	Sanitary Sewer (Existing / Proposed)	Traveled Way (Existing / Proposed)
Approx. Property Lines — P.L.	Building	Telephone Line	Ditch
Existing Right of Way	Trees — Conifer / Deciduous	Electric Line	Catch Basin
Limits of Wrought Portion — L.O.W.P.	Tree Line / Bush Line	Water Line	Manhole
Control Of Access — C.O.A.	Water Edge	Underdrain Line	Sewer Manhole
New Right of Way	Ledge / Rock/Boulder / Flag Pole	Gas Line	Utility Pole
New Easement	Fence — CHAIN LINK / BARB WIRE / STOCKADE	Guardrail	Fire Hydrant
New Temporary Rights	Sign / Well / Mailbox	Culvert	Curbing
New R/W Within Existing R/W			

Cut Line	Fill Line
Stonewall	Retaining Wall
Baseline — 10+00, 11+00, 12+00	
Monument	Traverse Point
Iron Rod Found — IRF	Pipe Found — IPF
Replacement Pin Set	

THIS PLAN WAS PREPARED IN CONNECTION WITH THE DEPARTMENT'S ACQUISITION OF REAL PROPERTY FOR TRANSPORTATION PURPOSES. IT CANNOT BE USED TO ESTABLISH LEGAL BOUNDARIES BETWEEN ABUTTING PROPERTY OWNERS.

25 0 25 50 75 100
Scale of Feet

STATE OF MAINE
REGISTRY OF DEEDS

COUNTY _____
RECEIVED _____, _____
at _____h_____m_____M and
recorded in Plan Bk _____, Pg._____
Attest: _____
REGISTER

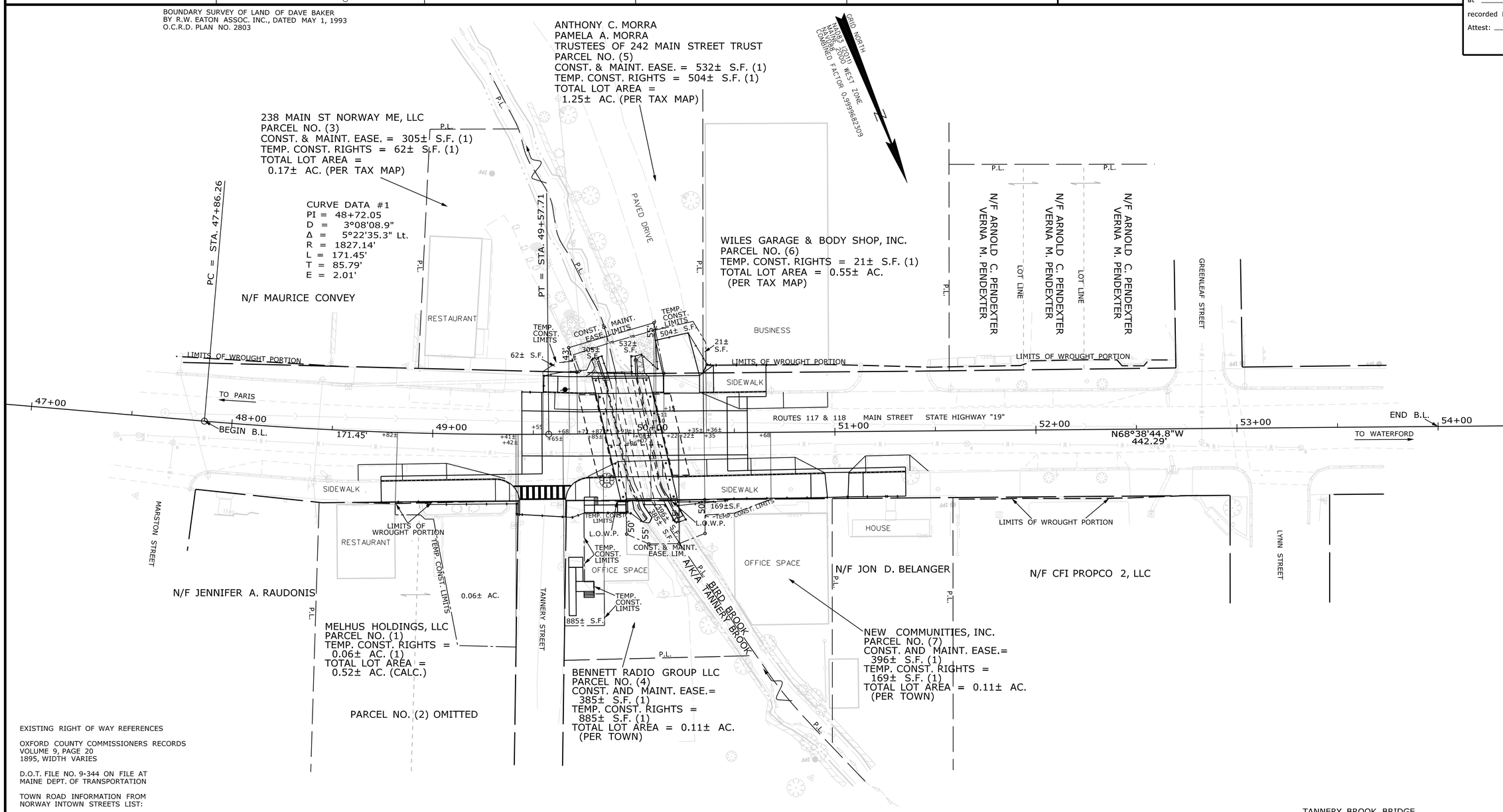

EXISTING RIGHT OF WAY REFERENCES

OXFORD COUNTY COMMISSIONERS RECORDS
VOLUME 9, PAGE 20
1895, WIDTH VARIES

D.O.T. FILE NO. 9-344 ON FILE AT
MAINE DEPT. OF TRANSPORTATION

TOWN ROAD INFORMATION FROM
NORWAY INTOWN STREETS LIST:

LYNN STREET - 3 RODS WIDE, ACCEPTED 1874
GREENLEAF STREET - 2 RODS WIDE, ACCEPTED 1869
TANNERY STREET - 24 FEET WIDE, ACCEPTED 1912
MARSTON STREET - 30 FEET WIDE FOR FIRST 297 FEET, ACCEPTED 1874

A PLAN OF CENTRAL MAINE POWER COMPANY LOTS
BETWEEN TANNERY AND MARSTON STREETS
NORWAY, MAINE, PREPARED BY WALDO N. SEAVEY,
DATED JUNE 1956, O.C.R.D. PLAN NO. 671

NOTE: PRESCRIPTIVE EASEMENT FOR
HIGHWAY PURPOSES WITHIN LIMITS OF
WROUGHT PORTION (L.O.W.P.)

TANNERY BROOK BRIDGE
OVER
TANNERY BROOK

BRIDGE NO. 3610 WIN 023116.00

ITEM	TECH	CHECKED
EXISTING CONDITION PLAN	PNS	JDF
FINAL RIGHT OF WAY	PNS	
AREAS		

STATE OF MAINE
DEPARTMENT OF TRANSPORTATION
16 STATE HOUSE STATION - AUGUSTA, ME 04333-0016 - 207-624-3460
NORWAY
RIGHT OF WAY MAP

REVISIONS

NO.	DATE	DESCRIPTION	BY

PLAN FILED IN PLAN BOOK	PAGE	COUNTY RECORD			
NO.	GRANTOR	INSTRUMENT	DATE	BOOK	PAGE

BRUCE A. VAN NOTE
COMMISSIONER
JOYCE NOEL TAYLOR
CHIEF ENGINEER
DATE

STATE HIGHWAY "19"
ROUTES 117 & 118 MAIN STREET
NORWAY OXFORD COUNTY
FEDERAL AID PROJECT NO. 2311600

MAY 2023	RIGHT-OF-WAY MAP	D.O.T. FILE NO. 9-428
SCALE 1" = 25'	SHEET 1 OF 1	

SHEET NUMBER
31
OF 31

Filename: ...\00\ROW\MSTA\001_RWPLAN1.dgn Division: ROW Username: Perry.Silvermon Date:10/20/2023