STATE OF MAINE
DEPARTMENT OF TRANSPORTATION

LIST OF DRAWINGS

Bridge Title Sheet 1
General Construction Notes 2
General Bridge Plan 3
Typical Sections 4
Substructure Plan 5
Abutment No. 1 Details 6
Abutment No. 2 Extension (2 Sheets) 7-8
Span 1 Pier Details 9
Span 2 Pier Details 10
Sidewalk Plan 11
Bridge Sidewalk Sections 12
Beam Details 13
Reinforcing Schedule 14

SANFORD
YORK COUNTY
WASHINGTON STREET BRIDGE
OVER
MOUSAM RIVER
BRIDGE #1359
WIN 022642.01

MATERIALS

Concrete:
- Precast ..... Class P
- All Other ..... Class A1

BASIC DESIGN STRESSES

Concrete:
- Class A1 ..... f 'c = 4,000 psi
- Class P ..... f 'c = 5,000 psi

TRAFFIC DATA

Current (2026) AADT 7770
Future (2036) AADT 8550
DHV - % of AADT 9%
Design Hour Volume 770
Heavy Trucks (% of AADT) 11%
Heavy Trucks (% of DHV) 10%
18 kip Equivalent P 2.0 X
18 kip Equivalent P 2.5 X
Design Speed (mph) 25

PROJECT LOCATION	*Washington St. Bridge (#1359) over Mousam River* *Sanford, York County* *Lat./Long. 43° 26' 28.0" N 70° 46' 25.4"*
PROGRAM AREA	*Highway Program*
OUTLINE OF WORK	*Sidewalk Widening, Additional Beam Line, and Substructure Extension*

STATE OF MAINE
DEPARTMENT OF TRANSPORTATION

APPROVED — DATE

COMMISSIONER:

CHIEF ENGINEER:

PROJECT INFORMATION

PROGRAM	Bridge
PROJECT MANAGER	E. MARTIN
DESIGNER	K. BOUCHARD
CONSULTANT	VHB
PROJECT RESIDENT	
CONTRACTOR	
PROJECT COMPLETION DATE	

SIGNATURE

P.E. NUMBER

DATE

SANFORD
DOWNTOWN IMPROVEMENTS

BRIDGE TITLE SHEET

SHEET NUMBER
160
OF 195

Filename:\BRIDGE\MSTA\B01_Title.dgn Division: HIGHWAY Username: jamesdavis Date:8/27/2026

GENERAL CONSTRUCTION NOTES

1. Project information referred to below may be accessed at the following MaineDOT web address: http://www.maine.gov/mdot/contractors/

2. The existing bridge plans may be accessed at the MaineDOT web address. The plans are reproductions of the original drawings as prepared for the construction of the bridge. It is very unlikely that the plans will show any construction field changes or any alterations which may have been made to the bridge during its life span.

3. All dimensions, angles, and stationing shown on existing plans are taken from the year 2000 as-built construction drawings and are not guaranteed to be accurate. All information based on or relating to the existing bridge shall be verified in the field by the Contractor. Adjustments to the proposed work shown in these plans due to field verifications of existing geometry shall be submitted to the Resident for approval. The Resident shall be given 14 calendar days for review and approval prior to performing work.

4. Reinforcing bar lengths and quantities shown on the plans are based on existing dimensions per Note 3. Where field verified dimensions of existing conditions vary from the dimensions shown, the Contractor shall adjust reinforcing bar lengths and quantities accordingly, maintaining the bar size, spacing, and cover shown on the plans. Adjusted bar lengths and quantities shall be submitted to the Resident for review and approval 14 days prior to reinforcement fabrication.

5. Reinforcing steel shall have a minimum concrete cover of 2" unless otherwise noted.

6. All existing reinforcing steel that is to be exposed and reused shall be cleaned by a method approved by the Resident. Payment shall be incidental to the related Contract Items.

7. All dowel installation into concrete is incidental to related contract items.

8. Removal of retaining wall at Abutment 2 extension location shall be paid for under item 202.17 Removing Existing Structural Concrete (Retaining Wall).

9. All existing materials which are removed from the work area shall be removed from the site and properly disposed of by the Contractor. These existing materials include, but are not limited to: concrete, reinforcing steel, silt, drainage pipes and other debris on or attached to the structure within the work areas. The cost of removal and disposal shall be incidental to the cost of the work items for which these removals are required.

10. If the depth of deteriorated concrete is at/or below the reinforcing steel, then remove the concrete to a minimum depth of 1 inch below the reinforcing bars.

11. Protective Coating for Concrete Surfaces shall be applied to the following areas:

All exposed surfaces of concrete curbs and sidewalks.
Fascias down to the drip notch.
Concrete barrier railing.
Abutment and Backwall Concrete.
& Abutment Extension Wall.

STATE OF MAINE
DEPARTMENT OF TRANSPORTATION

CAPITAL PROJECTS

WIN 024395.01

HIGHWAY PLANS

vhb

		BY	DATE
PROJ. MANAGER	E. MARTIN		
DESIGN-DETAILED	KJB	MJC	8/27/2026
CHECKED-REVIEWED	KJB	CTA	8/27/2026
DESIGN2-DETAILED2			
DESIGN3-DETAILED3			
REVISIONS 1			
REVISIONS 2			
REVISIONS 3			
REVISIONS 4			
FIELD CHANGES			

SANFORD
WASHINGTON STREET BRIDGE

GENERAL CONSTRUCTION NOTES

SHEET NUMBER

161

OF 195

Filename: ...\BRIDGE\MSTA\B02_Quantities.dgn Division: HIGHWAY Username: jamesdavis Date:8/27/2026

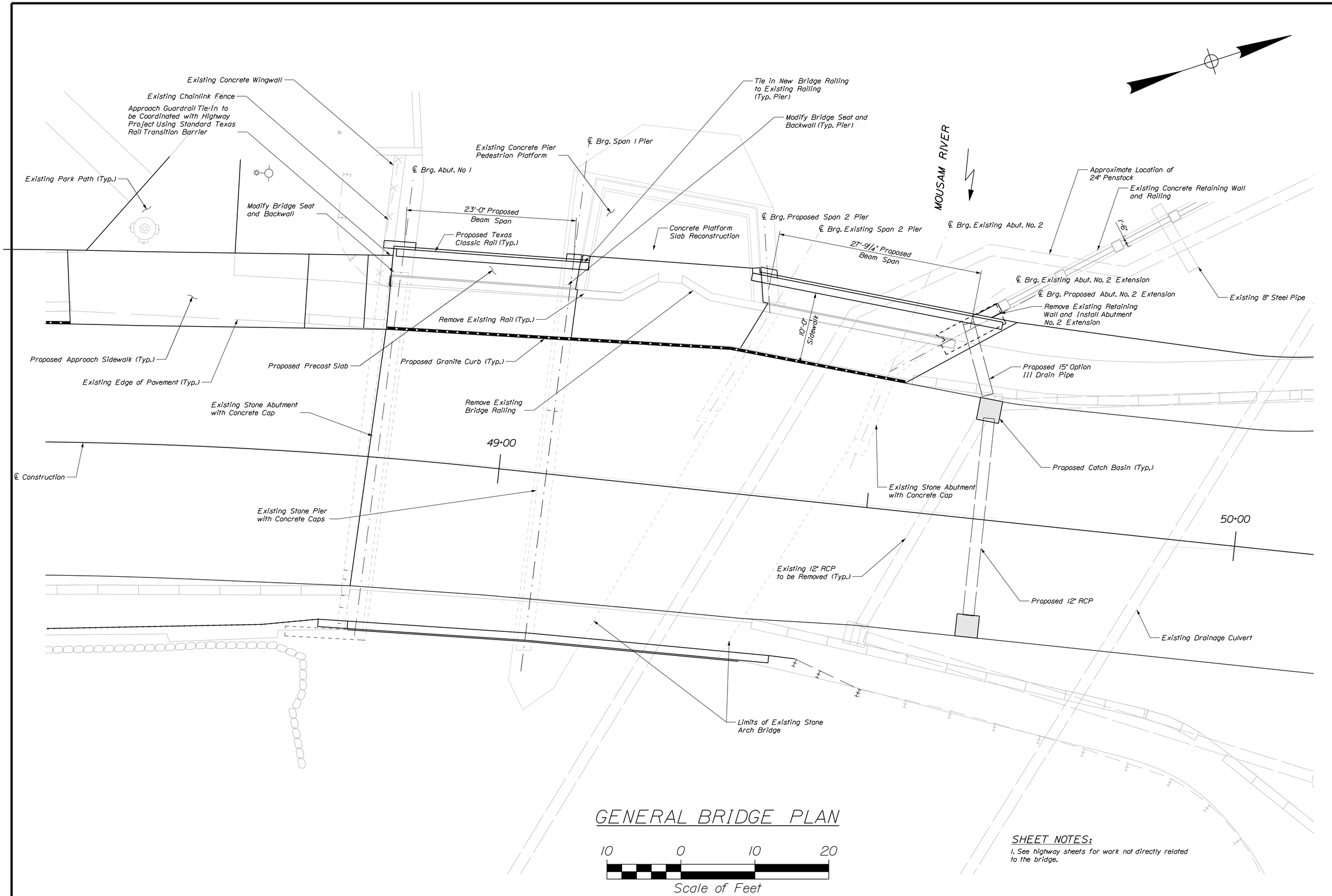

GENERAL BRIDGE PLAN

SHEET NOTES:

1. See highway sheets for work not directly related to the bridge.

STATE OF MAINE
DEPARTMENT OF TRANSPORTATION

CAPITAL PROJECTS

WIN 024395.01

HIGHWAY PLANS

vhb

PROJ. MANAGER	E. MARTIN	BY	DATE
DESIGN-DETAILED	K.JB	MJC	8/27/2026
CHECKED-REVIEWED	K.JB	CTA	8/27/2026
DESIGN2-DETAILED2			
DESIGN3-DETAILED3			
REVISIONS 1			
REVISIONS 2			
REVISIONS 3			
REVISIONS 4			
FIELD CHANGES			

SANFORD
WASHINGTON STREET BRIDGE

GENERAL BRIDGE PLAN

SHEET NUMBER
162
OF 195

Filename: ...\MSTA\B03_GeneralPlan.dgn Division: HIGHWAY Username: jamesdavis Date:8/27/2026

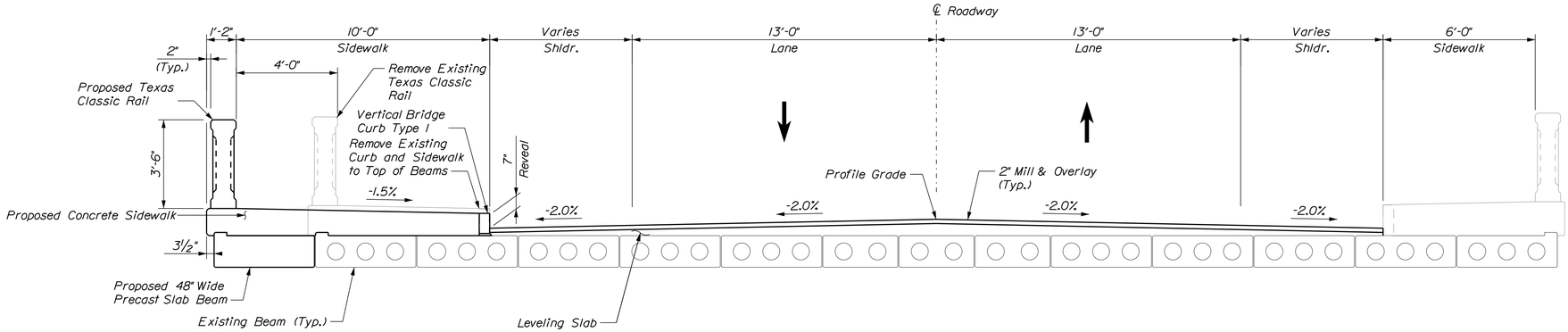

SPAN 1 SUPERSTRUCTURE TYPICAL SECTION

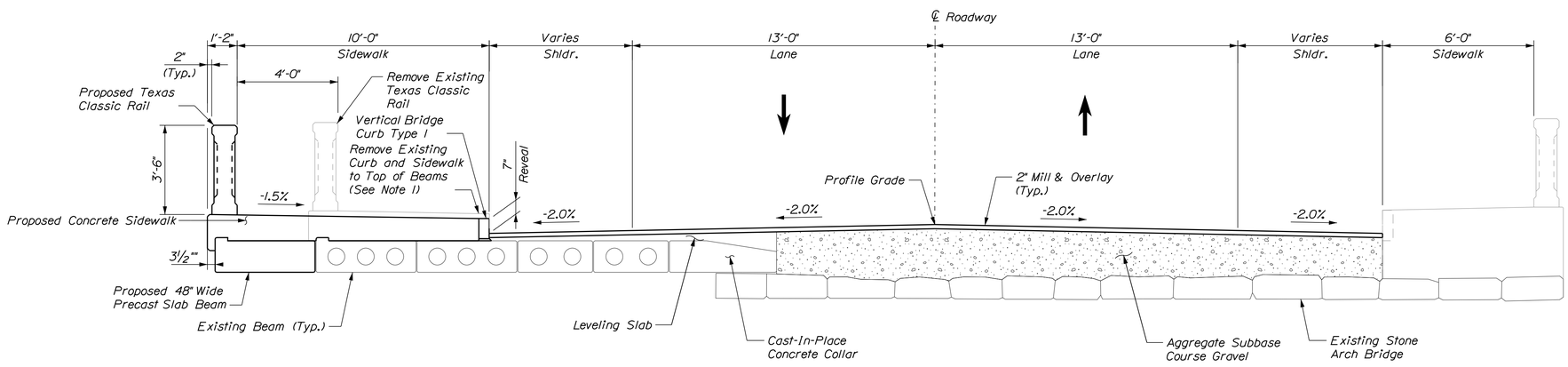

SPAN 2 SUPERSTRUCTURE TYPICAL SECTION

SHEET NOTES:

1. Existing reinforcement projecting from top of beams shall be preserved. The Contractor shall take care to not damage existing beam reinforcement or the top of the beams. Any damage to the beam reinforcement or beams shall be repaired by the Contractor to the satisfaction of the Resident at no additional cost to the Department.

STATE OF MAINE
DEPARTMENT OF TRANSPORTATION

CAPITAL PROJECTS

WIN 024395.01

HIGHWAY PLANS

vhb

PROJ. MANAGER	E. MARTIN	BY	DATE
DESIGN-DETAILED	K.JB	BJM	8/27/2026
CHECKED-REVIEWED	K.JB	CTA	8/27/2026
DESIGN2-DETAILED2			
DESIGN3-DETAILED3			
REVISIONS 1			
REVISIONS 2			
REVISIONS 3			
REVISIONS 4			
FIELD CHANGES			

SANFORD
WASHINGTON STREET BRIDGE

TYPICAL SECTIONS

SHEET NUMBER
163
OF 195

Filename: ...\MSTA\B04_Typical_Sections.dgn Division: HIGHWAY Username: jamesdavis Date:8/27/2026

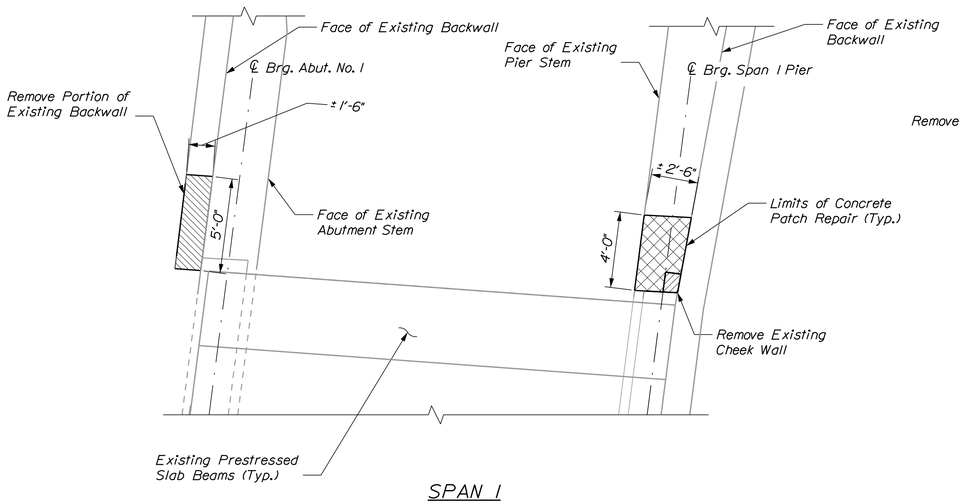

SPAN 1
SUBSTRUCTURE REMOVAL PLAN

Scale: 1/4" = 1'-0"

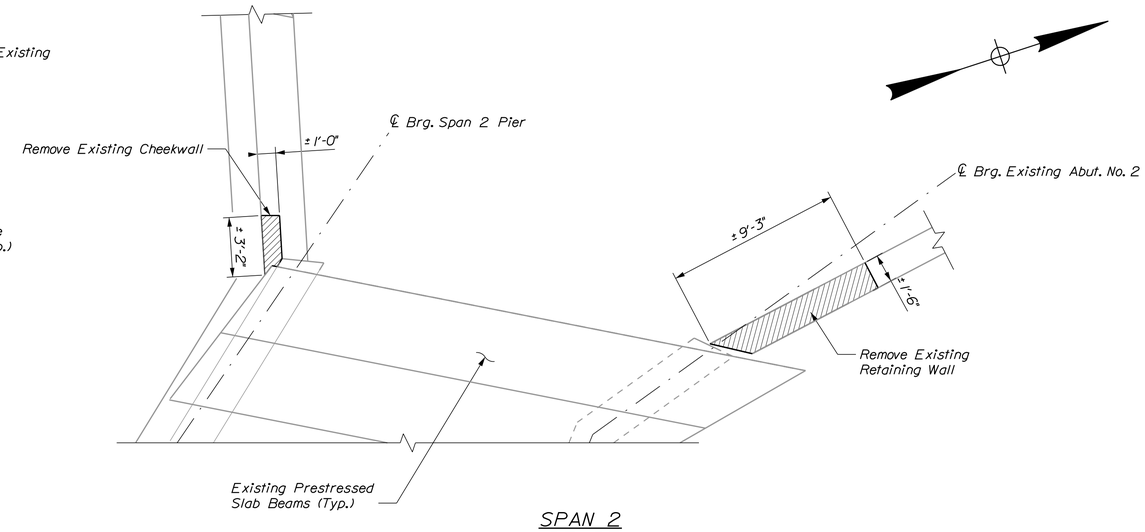

SPAN 2
SUBSTRUCTURE REMOVAL PLAN

Scale: 1/4" = 1'-0"

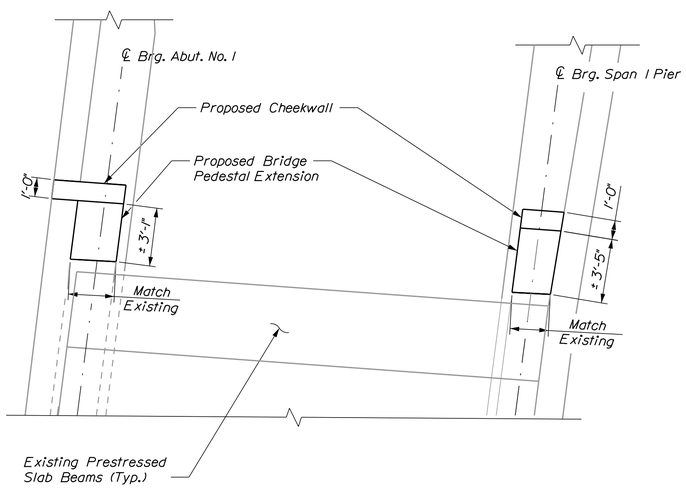

SPAN 1
PROPOSED SUBSTRUCTURE PLAN

Scale: 1/4" = 1'-0"

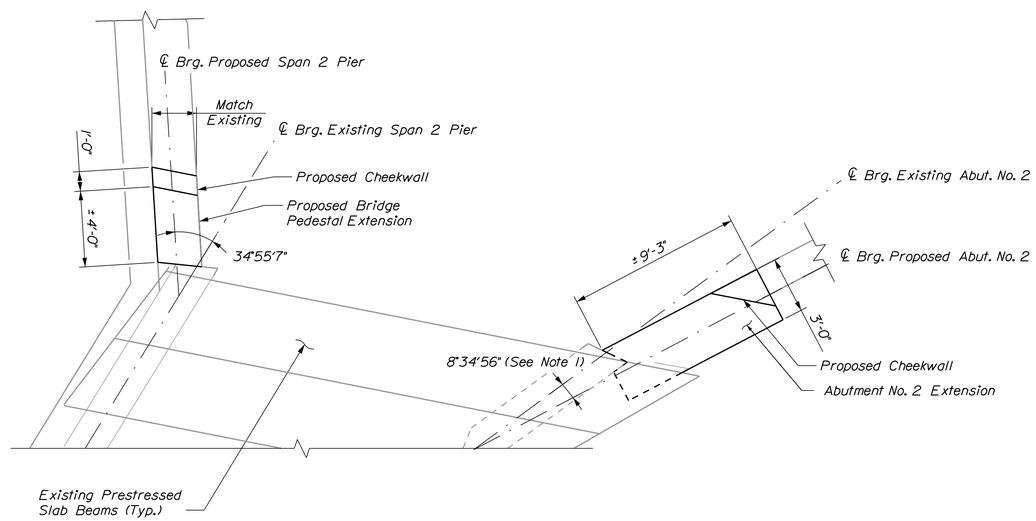

SPAN 2
PROPOSED SUBSTRUCTURE PLAN

Scale: 1/4" = 1'-0"

SHEET NOTES:

1. The Contractor shall field verify skew angle dimensions of existing substructure.

STATE OF MAINE
DEPARTMENT OF TRANSPORTATION

CAPITAL PROJECTS

WIN 024395.01

HIGHWAY PLANS

vhb

PROJ. MANAGER	E. MARTIN	BY	DATE
DESIGN-DETAILED	K.JB	MJC	8/27/2026
CHECKED-REVIEWED	K.JB	CTA	8/27/2026
DESIGN2-DETAILED2			
DESIGN3-DETAILED3			
REVISIONS 1			
REVISIONS 2			
REVISIONS 3			
REVISIONS 4			
FIELD CHANGES			

SANFORD
WASHINGTON STREET BRIDGE

SUBSTRUCTURE PLAN

SHEET NUMBER

164

OF 195

Filename: ...\MSTA\B07_Substructure_Plan.dgn Division: HIGHWAY Username: jamesdavis Date:8/27/2026

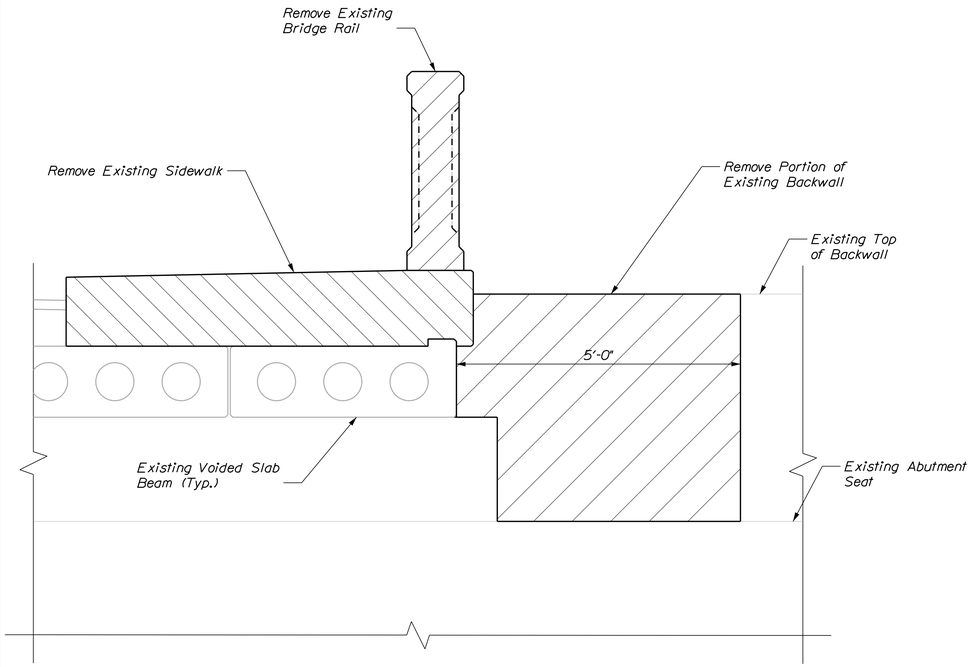

ABUTMENT NO. 1
REMOVAL ELEVATION

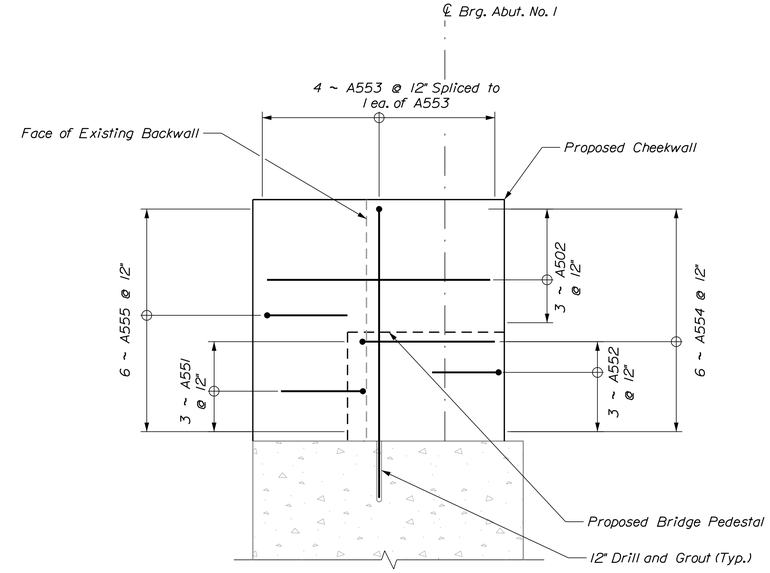

SECTION B-B

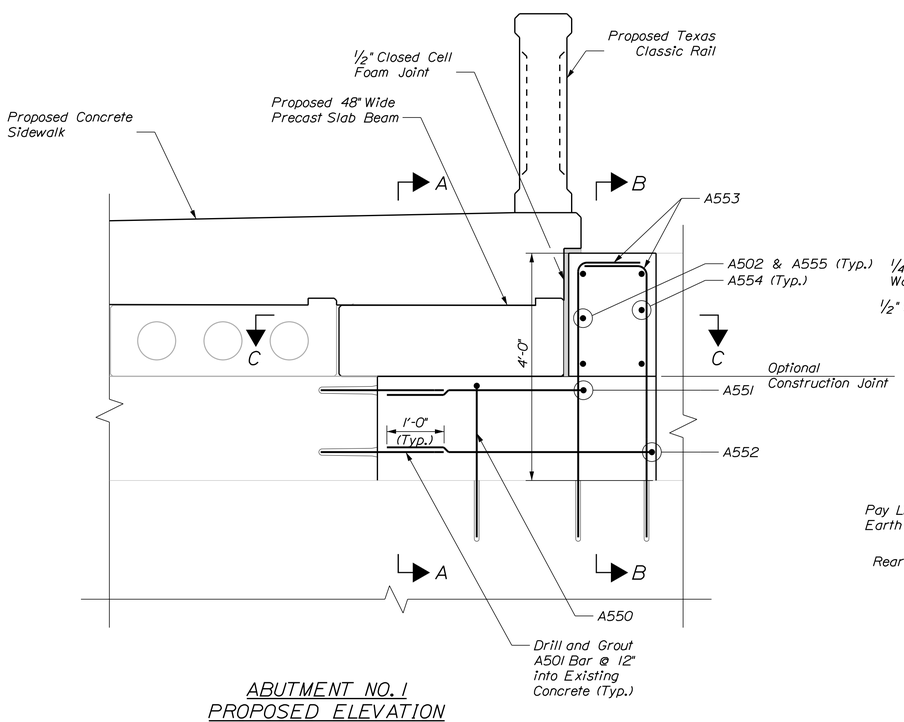

ABUTMENT NO. 1
PROPOSED ELEVATION

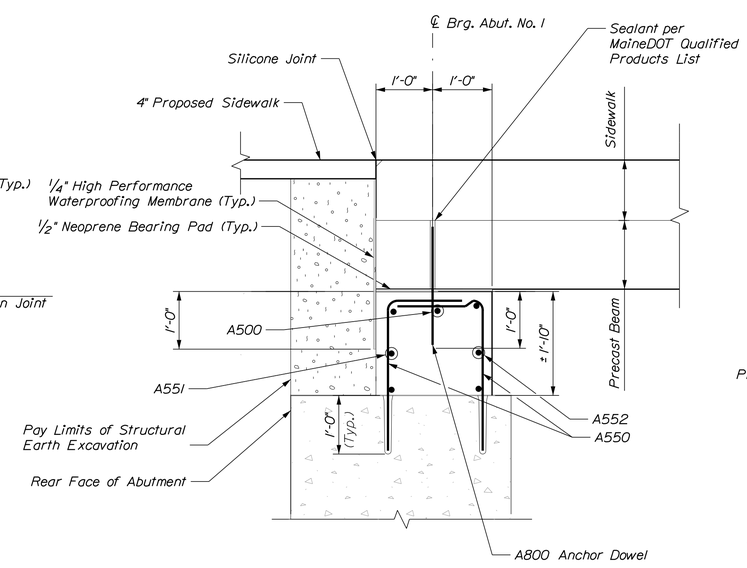

SECTION A-A

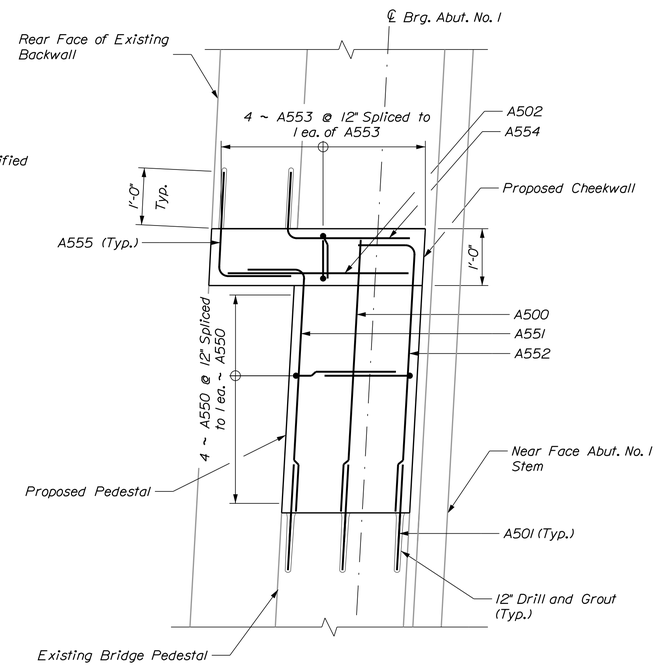

SECTION C-C

STATE OF MAINE
DEPARTMENT OF TRANSPORTATION
CAPITAL PROJECTS
WIN 024395.01
HIGHWAY PLANS

PROJ. MANAGER	E. MARTIN	BY	DATE
DESIGN-DETAILED	K.JB	MJC	8/27/2026
CHECKED-REVIEWED	K.JB	CTA	8/27/2026
DESIGN2-DETAILED2			
DESIGN3-DETAILED3			
REVISIONS 1			
REVISIONS 2			
REVISIONS 3			
REVISIONS 4			
FIELD CHANGES			

SANFORD
WASHINGTON STREET BRIDGE

ABUTMENT NO. 1 DETAILS

SHEET NUMBER
165
OF 195

Filename: ...\MSTA\B08_Abutment1_Details.dgn Division: HIGHWAY Username: jamesdavis Date:8/27/2026

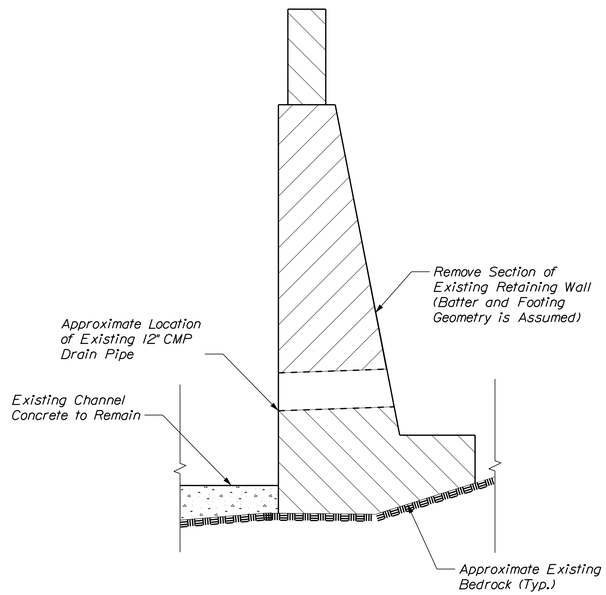

RETAINING WALL EXISTING SECTION

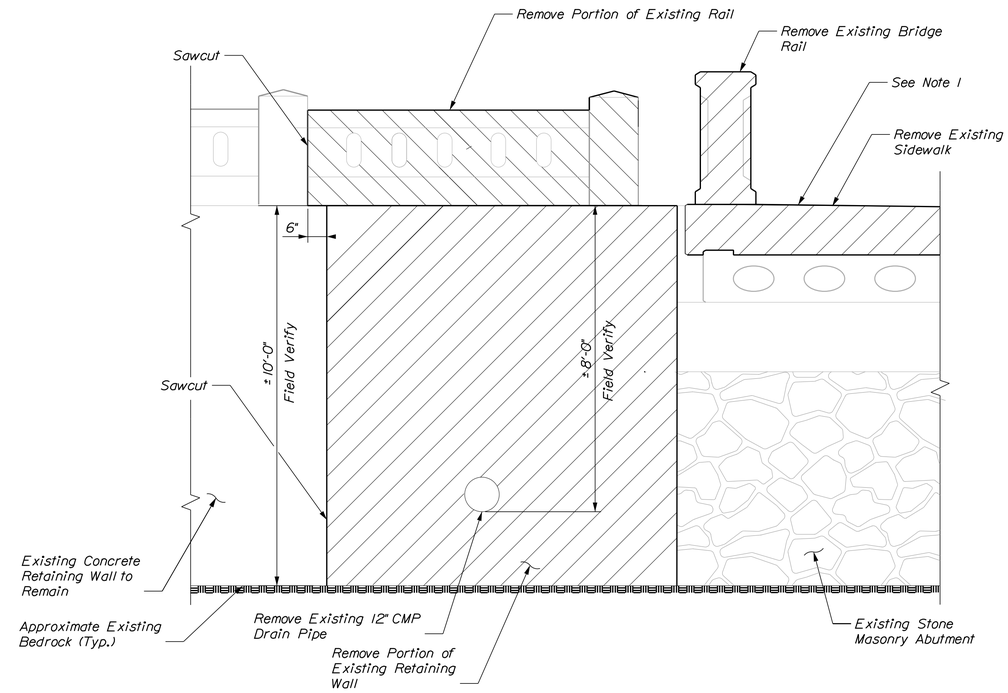

RETAINING WALL EXISTING ELEVATION

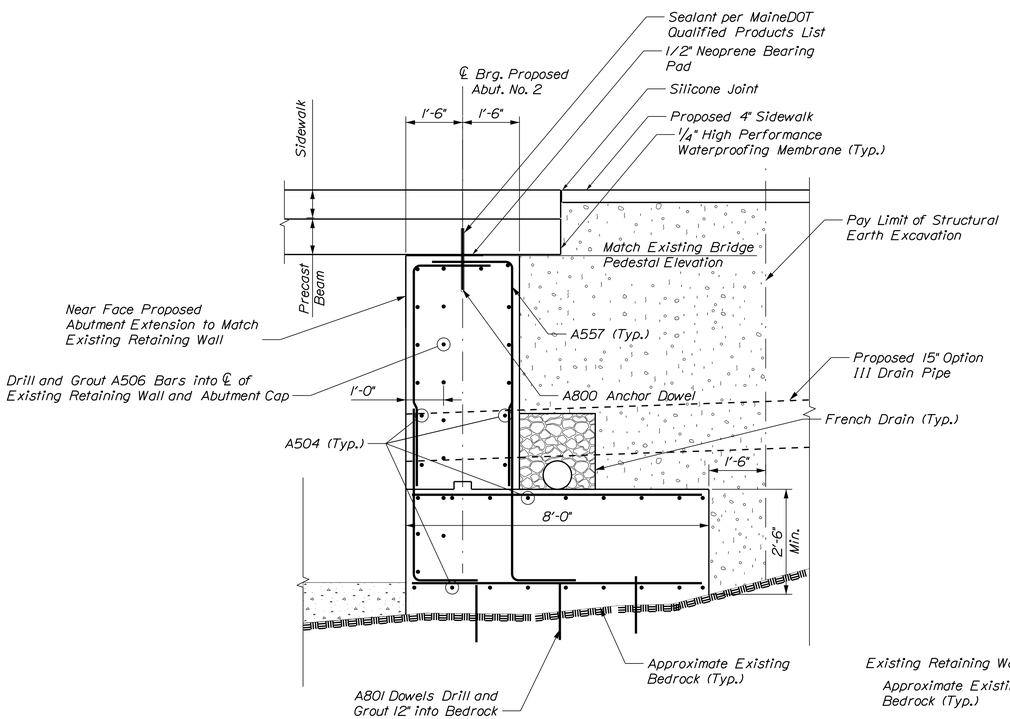

ABUTMENT 2 EXTENSION PROPOSED SECTION

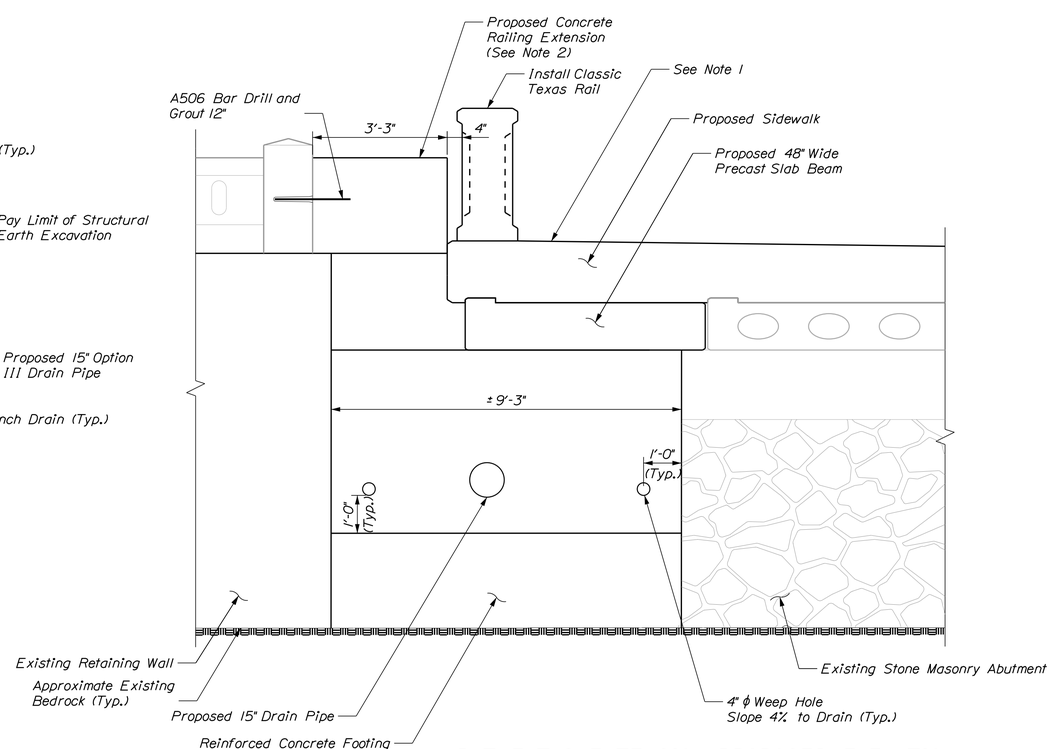

ABUTMENT 2 EXTENSION PROPOSED ELEVATION

Elevation View Normal to Wall. Bridge Skewed

SHEET NOTES:

1. Superstructure and stone abutment shown skewed relative to retaining wall and abutment extension.

2. The Contractor shall provide #5 bars at 12" in every direction. The Contractor shall provide the Resident a reinforcement plan for review and approval 14 days prior to the reinforcement fabrication.

STATE OF MAINE
DEPARTMENT OF TRANSPORTATION

CAPITAL PROJECTS

WIN 024395.01

HIGHWAY PLANS

vhb

		BY	DATE
PROJ. MANAGER	E. MARTIN		
DESIGN-DETAILED	KJB	MJC	8/27/2026
CHECKED-REVIEWED	KJB	CTA	8/27/2026
DESIGN2-DETAILED2			
DESIGN3-DETAILED3			
REVISIONS 1			
REVISIONS 2			
REVISIONS 3			
REVISIONS 4			
FIELD CHANGES			

SANFORD
WASHINGTON STREET BRIDGE

ABUTMENT NO. 2 EXTENSION
(1 OF 2)

SHEET NUMBER
166
OF 195

Filename: ...\B11_Abutment2_Extension1of2.dgn Division: HIGHWAY Username: jamesdavis Date:8/27/2026

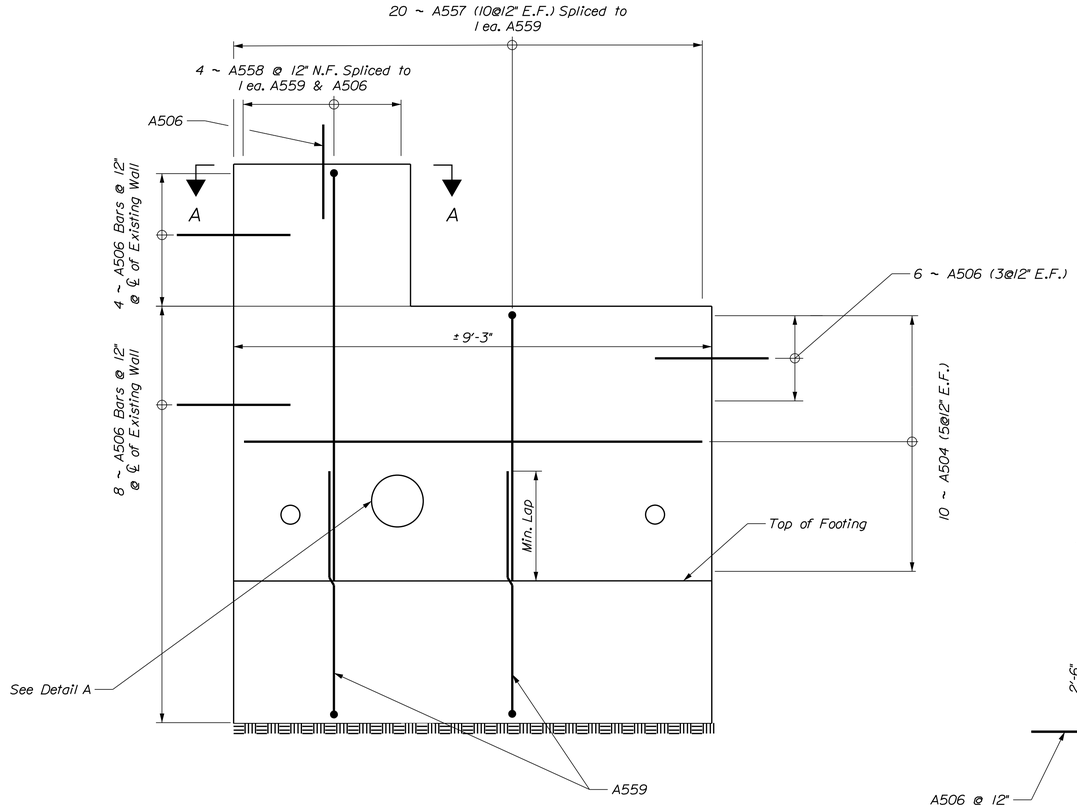

ABUTMENT NO. 2 EXTENSION
REINFORCEMENT ELEVATION

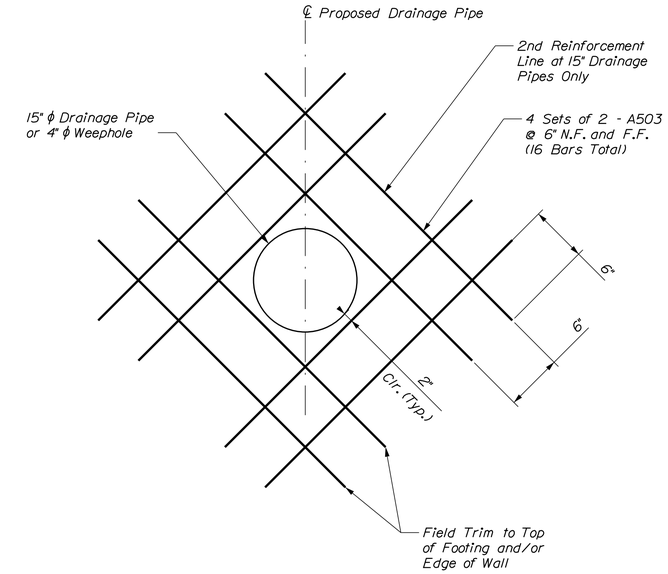

DETAIL A

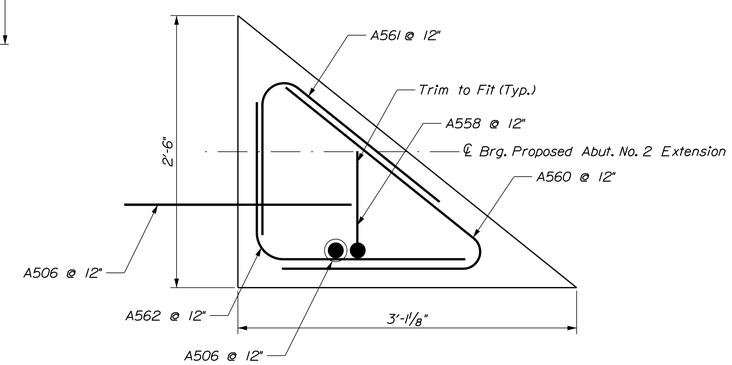

CHEEKWALL SECTION A-A

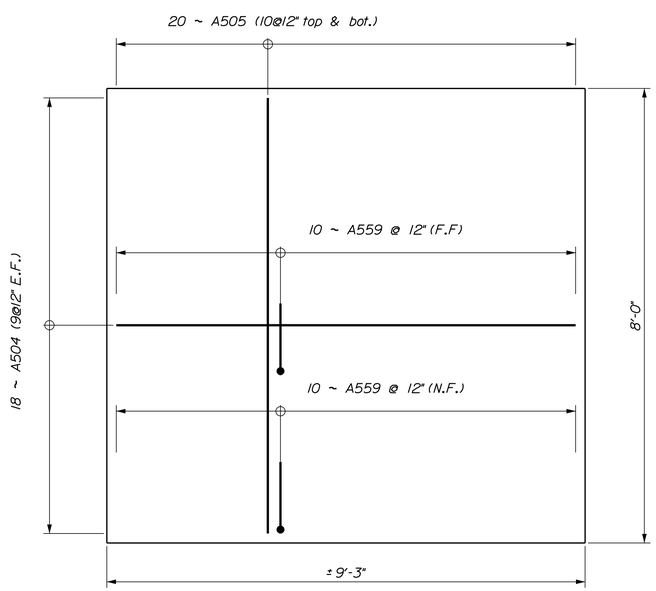

ABUTMENT NO. 2 EXTENSION
FOOTING PLAN

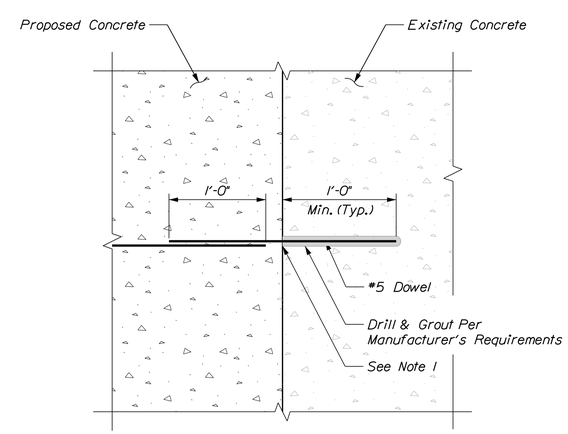

CONCRETE DOWEL DETAIL

SHEET NOTES:

1. The anchoring material shall be one of the products listed on the Maine Department of Transportation List of Prequalified Type 3 Anchoring Materials. Installation shall be in conformance with the Manufacturer's recommendations.

2. Reinforcing bar lengths and quantities for the Abutment No. 2 Extension shall be field verified and adjusted in accordance with Note 4 on Sheet 161.

3. The location, dimensions, and condition of the existing retaining wall, stone masonry abutment, and bedrock at the Abutment No. 2 Extension are based on incomplete as-built information and assumed existing conditions. Where excavation for the proposed extension reveals conditions differing from those shown, including but not limited to wall batter, wall thickness, bedrock elevation, or unsound or deteriorated existing concrete, masonry, or rock, the Contractor shall stop work in that location and notify the Resident prior to proceeding.

4. Drilled hole locations, embedment depths, and dowel lengths for all dowels drilled and grouted into the existing retaining wall, stone masonry abutment, abutment cap, and bedrock at the Abutment No. 2 Extension are based on incomplete as-built information and assumed existing conditions. Where existing reinforcing, anchors, or other obstructions are encountered during drilling, or where the material at dowel installation locations is found unsound, deteriorated, or otherwise unsuitable, the Contractor shall stop work at that location and notify the Resident prior to proceeding.

STATE OF MAINE
DEPARTMENT OF TRANSPORTATION
CAPITAL PROJECTS
WIN 024395.01
HIGHWAY PLANS

vhb

		BY	DATE
PROJ. MANAGER	E. MARTIN		
DESIGN-DETAILED	K.JB	MJC	8/27/2026
CHECKED-REVIEWED	K.JB	CTA	8/27/2026
DESIGN2-DETAILED2			
DESIGN3-DETAILED3			
REVISIONS 1			
REVISIONS 2			
REVISIONS 3			
REVISIONS 4			
FIELD CHANGES			

SANFORD
WASHINGTON STREET BRIDGE
ABUTMENT NO. 2 EXTENSION
(2 OF 2)

SHEET NUMBER
167
OF 195

Filename: ...\B12_Abutment2_Extension_2of2.dgn Division: HIGHWAY Username: jamesdavis Date:8/27/2026

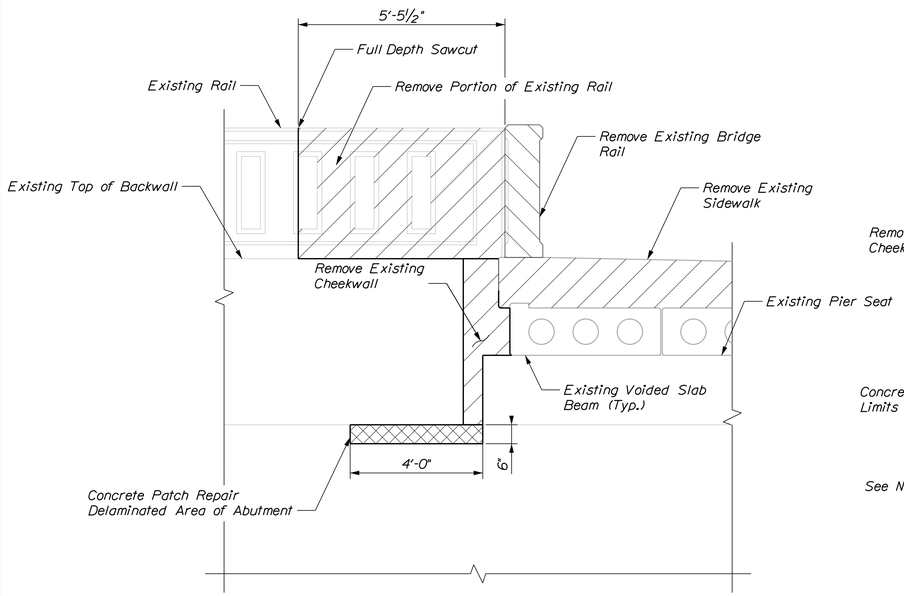

SPAN 1 PIER
REMOVAL ELEVATION

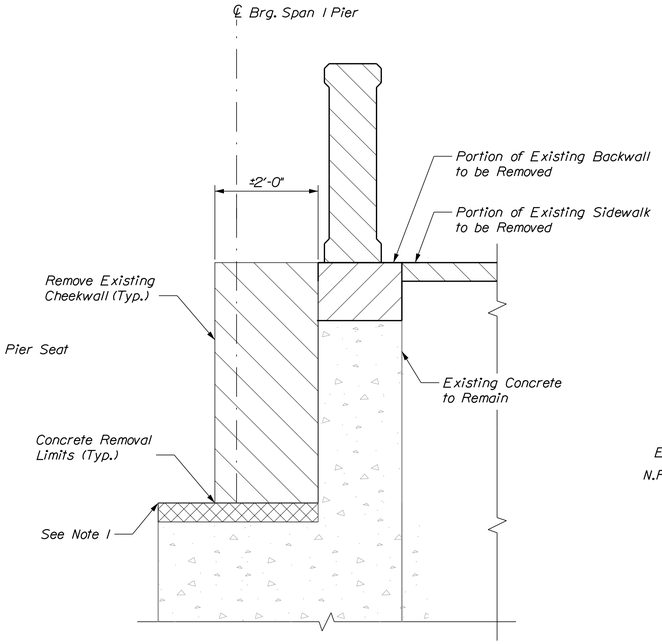

SPAN 1 PIER
EXISTING SECTION

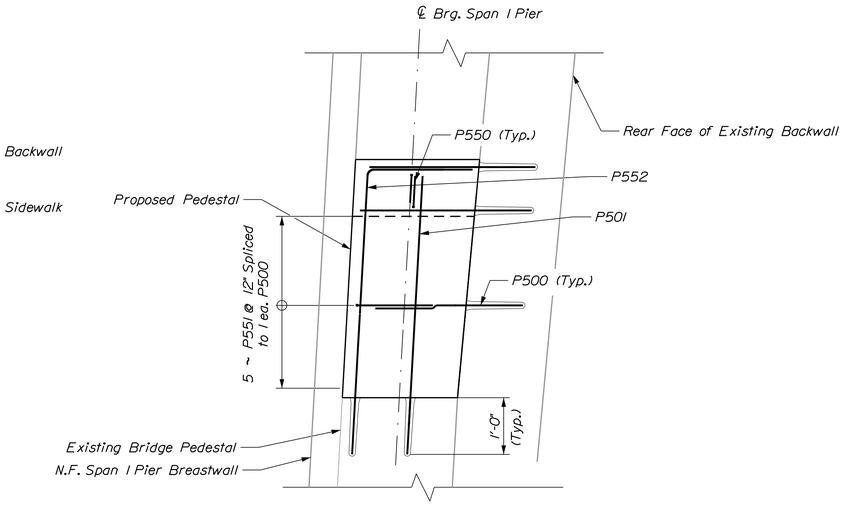

SECTION B-B

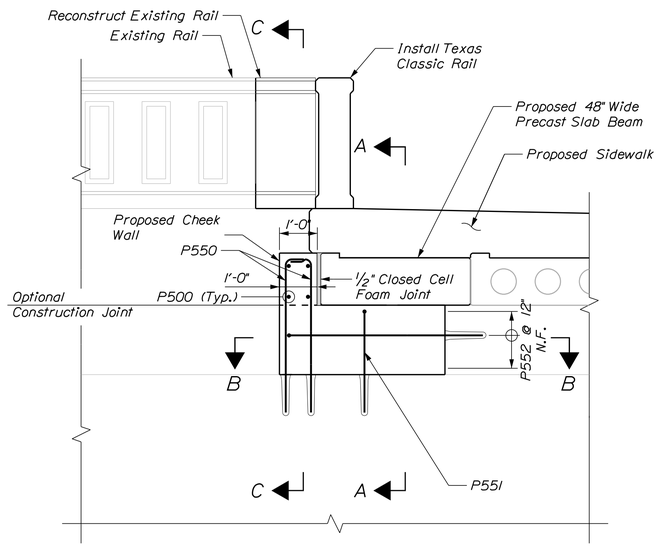

SPAN NO. 1 PIER
PROPOSED ELEVATION

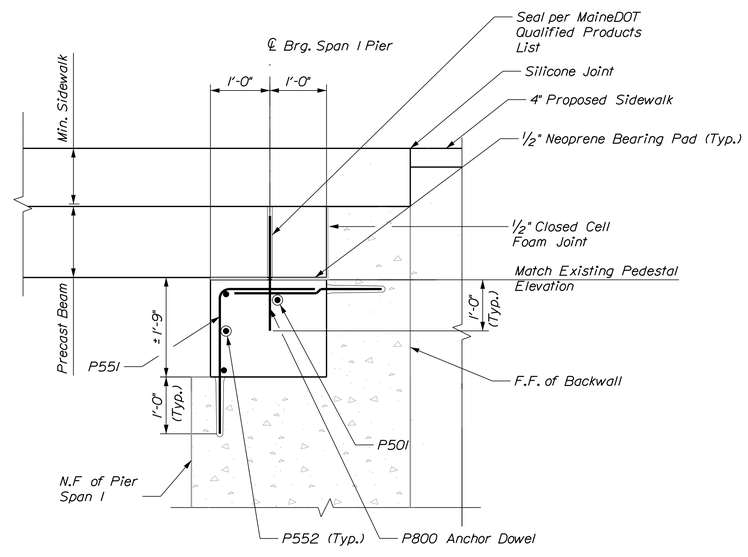

SECTION A-A

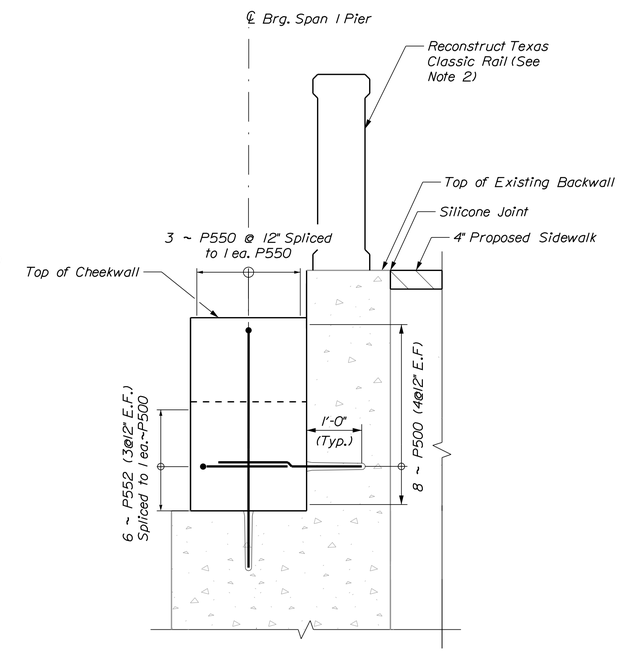

SECTION C-C

SHEET NOTES:

1. Chip and remove all loose, unsound and deteriorated concrete from the bridge seat within the limits shown, to a depth of 3" minimum and 6" maximum.

2. See MaineDOT Standard Details 526(39) through 526(55) for Texas Classic Rail details.

STATE OF MAINE
DEPARTMENT OF TRANSPORTATION
CAPITAL PROJECTS
WIN 024395.01
HIGHWAY PLANS

vhb

		BY	DATE
PROJ. MANAGER	E. MARTIN		
DESIGN-DETAILED	KJB	MJC	8/27/2026
CHECKED-REVIEWED	KJB	CTA	8/27/2026
DESIGN2-DETAILED2			
DESIGN3-DETAILED3			
REVISIONS 1			
REVISIONS 2			
REVISIONS 3			
REVISIONS 4			
FIELD CHANGES			

SANFORD
WASHINGTON STREET BRIDGE

SPAN 1 PIER DETAILS

SHEET NUMBER
168
OF 195

Filename: ...\BRIDGE\MSTA\B09_Span1_Pier.dgn Division: HIGHWAY Username: jamesdavis Date:8/27/2026

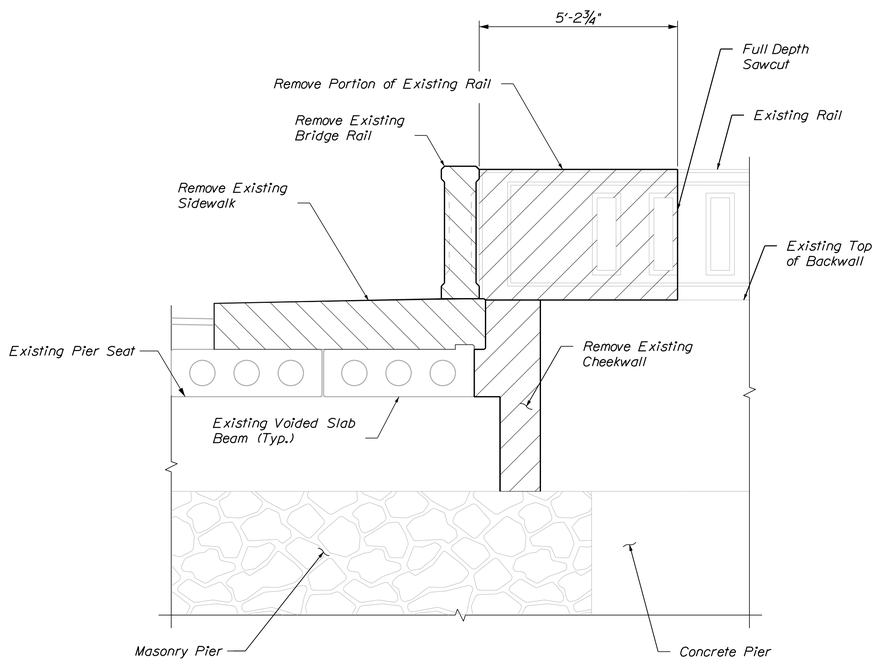

SPAN NO. 2 PIER
REMOVAL ELEVATION

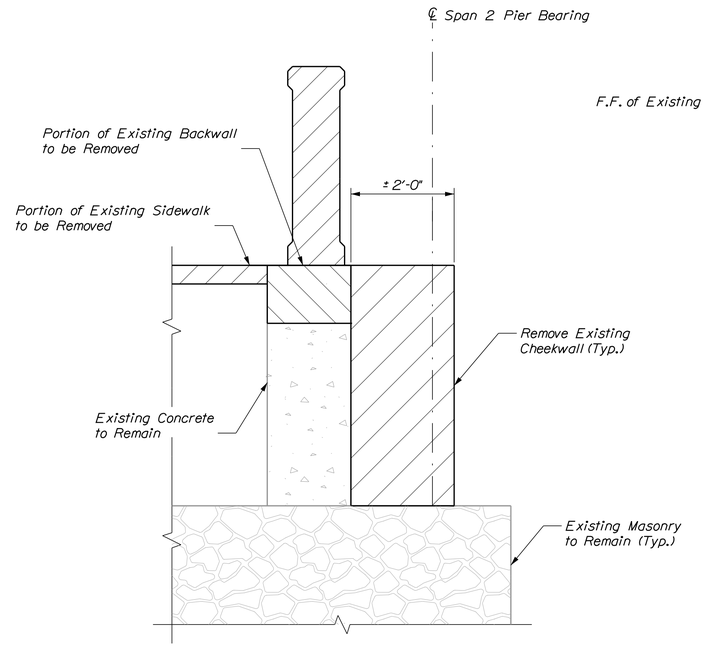

SPAN 2 PIER
EXISTING SECTION

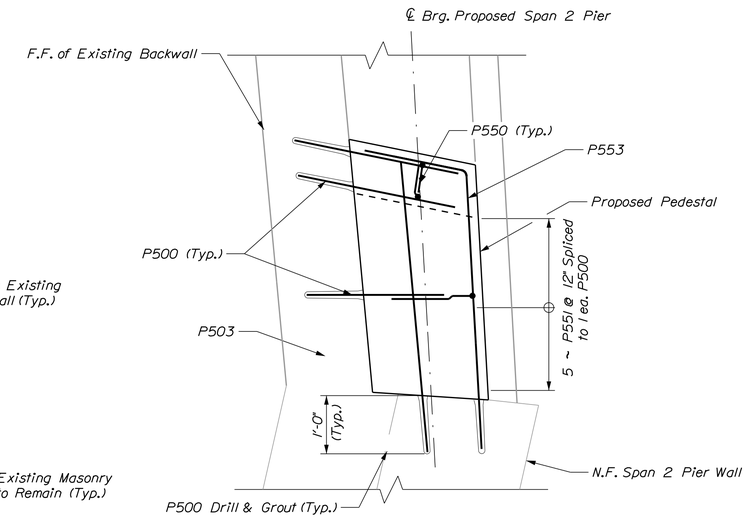

SECTION B-B

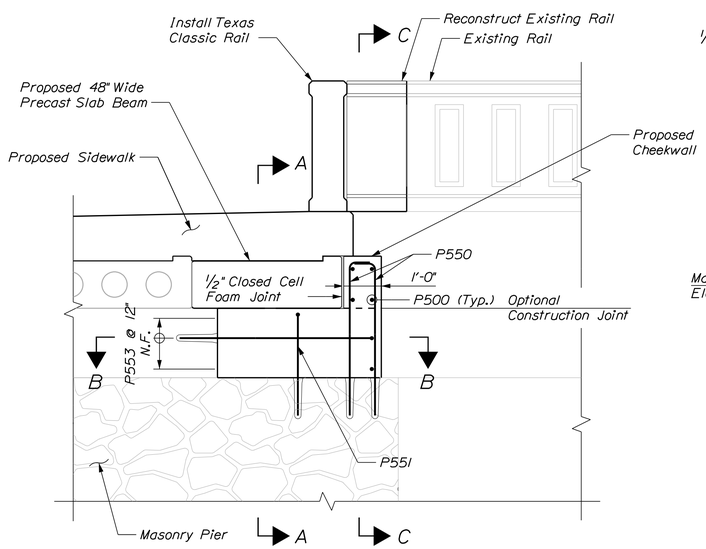

SPAN NO. 2 PIER
PROPOSED ELEVATION

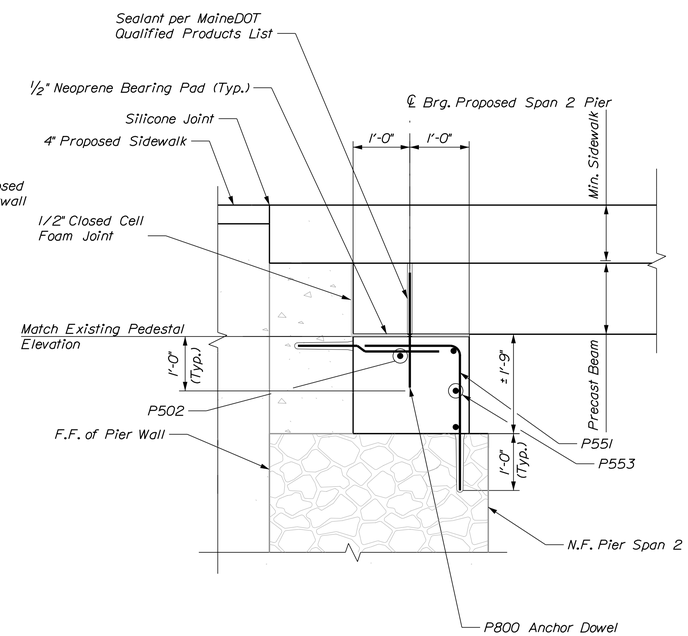

SECTION A-A

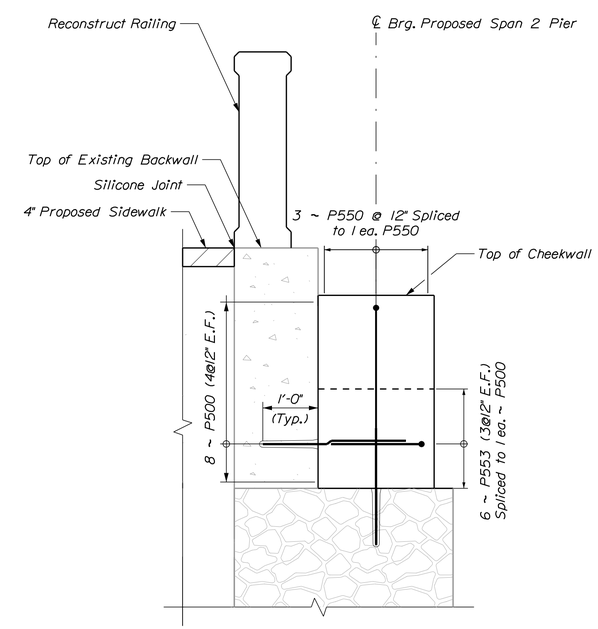

SECTION C-C

STATE OF MAINE
DEPARTMENT OF TRANSPORTATION

CAPITAL PROJECTS

WIN 024395.01

HIGHWAY PLANS

vhb

PROJ. MANAGER	E. MARTIN	BY	DATE
DESIGN-DETAILED	KJB	MJC	8/27/2026
CHECKED-REVIEWED	KJB	CTA	8/27/2026
DESIGN2-DETAILED2			
DESIGN3-DETAILED3			
REVISIONS 1			
REVISIONS 2			
REVISIONS 3			
REVISIONS 4			
FIELD CHANGES			

SANFORD
WASHINGTON STREET BRIDGE

SPAN 2 PIER DETAILS

SHEET NUMBER
169
OF 195

Filename: ...\MSTA\B10_Span2_Pier1.dgn Division: HIGHWAY Username: jamesdavis Date:8/27/2026

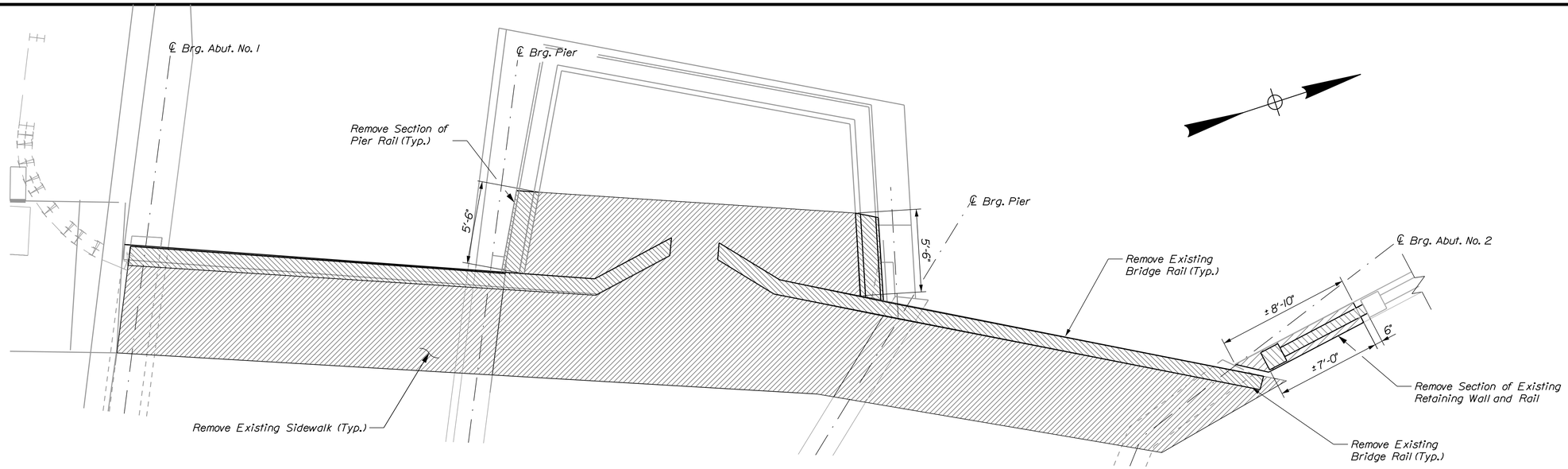

SIDEWALK AND RAIL REMOVAL PLAN

Scale: 1/4" = 1'-0"

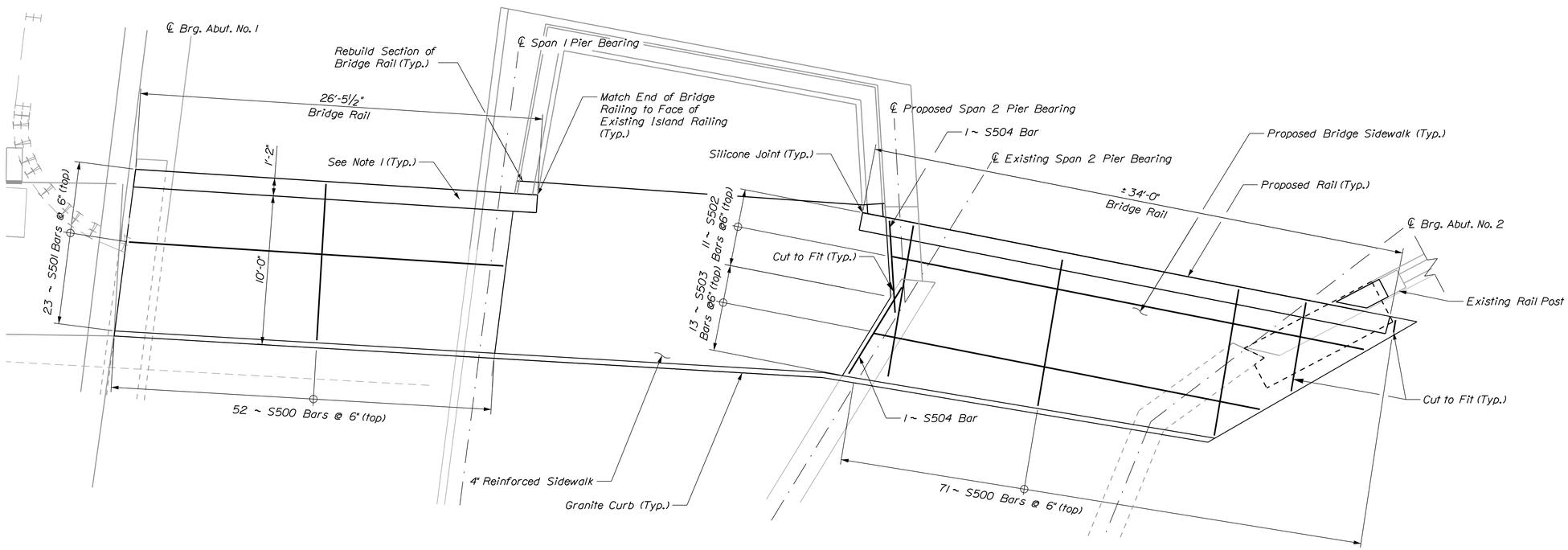

PROPOSED SIDEWALK AND RAILING PLAN

Scale: 1/4" = 1'-0"

SHEET NOTES:

1. See MaineDOT Standard Detail 526(39) through 526(55) for Texas Classic Rail details.

STATE OF MAINE
DEPARTMENT OF TRANSPORTATION

CAPITAL PROJECTS

WIN 024395.01

HIGHWAY PLANS

vhb

PROJ. MANAGER	E. MARTIN		
DESIGN-DETAILED	K.JB	MJC	8/27/2026
CHECKED-REVIEWED	K.JB	CTA	8/27/2026
DESIGN2-DETAILED2			
DESIGN3-DETAILED3			
REVISIONS 1			
REVISIONS 2			
REVISIONS 3			
REVISIONS 4			
FIELD CHANGES			

SANFORD
WASHINGTON STREET BRIDGE

SIDEWALK PLAN

SHEET NUMBER

170

OF 195

Filename: ...\MSTA\B05_Sidewalk_Plan.dgn Division: HIGHWAY Username: jamesdavis Date:8/27/2026

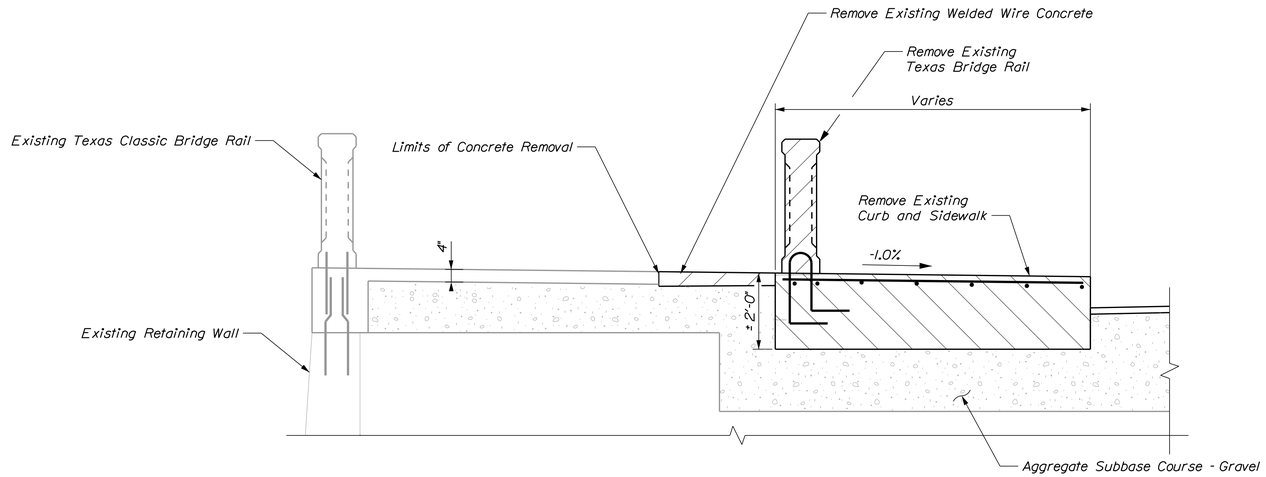

EXISTING SIDEWALK AT PIER

Scale: 1/2" = 1'-0"

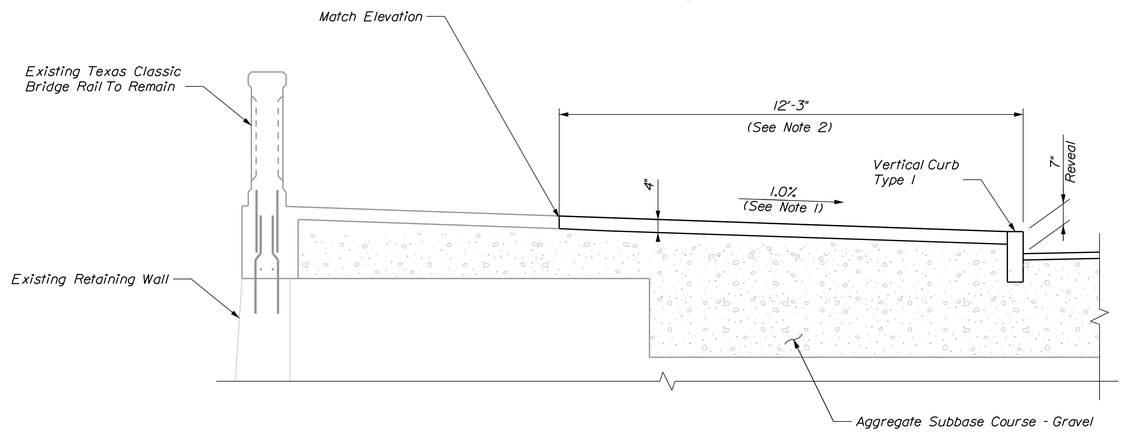

PROPOSED SIDEWALK AT PIER

Scale: 1/2" = 1'-0"

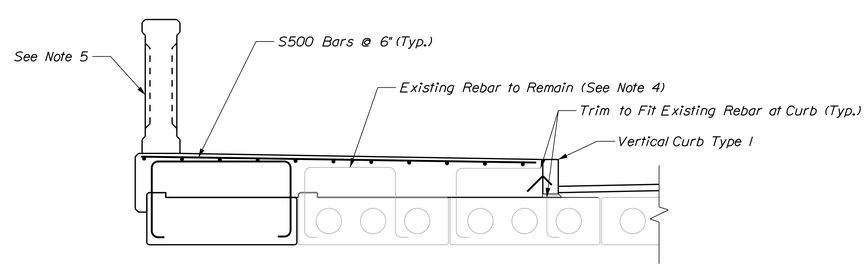

PROPOSED SIDEWALK AT SPANS 1 & 2

Scale: 1/2" = 1'-0"

SHEET NOTES:

1. Warp to match existing island slab. Required minimum slope is 0.5%.
2. The Contractor shall verify the tie in location based on existing and proposed grades. The Contractor shall notify the Engineer if a change in tie in location is required in order to maintain a minimum 0.5% slope.
3. See Standard Detail 608(01) for sidewalk reinforcing.
4. The Contractor shall take care during demolition to preserve the integrity of existing reinforcement to remain. Any existing reinforcement to remain that is damaged to a degree deemed unusable by the Resident shall be repaired or replaced at no cost to the Town. Reinforcing steel that is to be exposed and reused shall be cleaned of loose debris by a method approved by the Resident. Payment shall be incidental related Contract Items.
5. See MaineDOT Standard Detail 526(39) through 526(55) for Texas Classic Rail details.

STATE OF MAINE
DEPARTMENT OF TRANSPORTATION

CAPITAL PROJECTS

WIN 024395.01

HIGHWAY PLANS

vhb

PROJ. MANAGER	E. MARTIN	BY	DATE
DESIGN-DETAILED	K.JB	MJC	8/27/2026
CHECKED-REVIEWED	K.JB	CTA	8/27/2026
DESIGN2-DETAILED2			
DESIGN3-DETAILED3			
REVISIONS 1			
REVISIONS 2			
REVISIONS 3			
REVISIONS 4			
FIELD CHANGES			

SANFORD
WASHINGTON STREET BRIDGE

BRIDGE SIDEWALK SECTIONS

SHEET NUMBER

171

OF 195

Filename: ...\MSTA\B06_Sidewalk_Sections.dgn Division: HIGHWAY Username: jamesdavis Date:8/27/2026

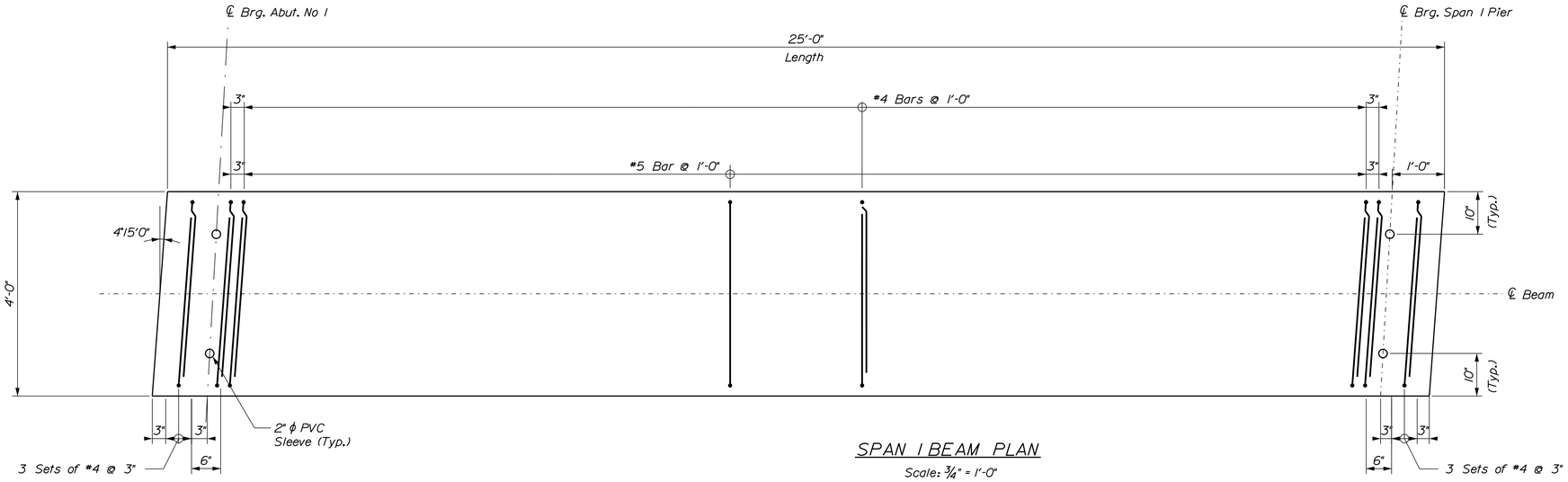

SPAN 1 BEAM PLAN

Scale: 3/4" = 1'-0"

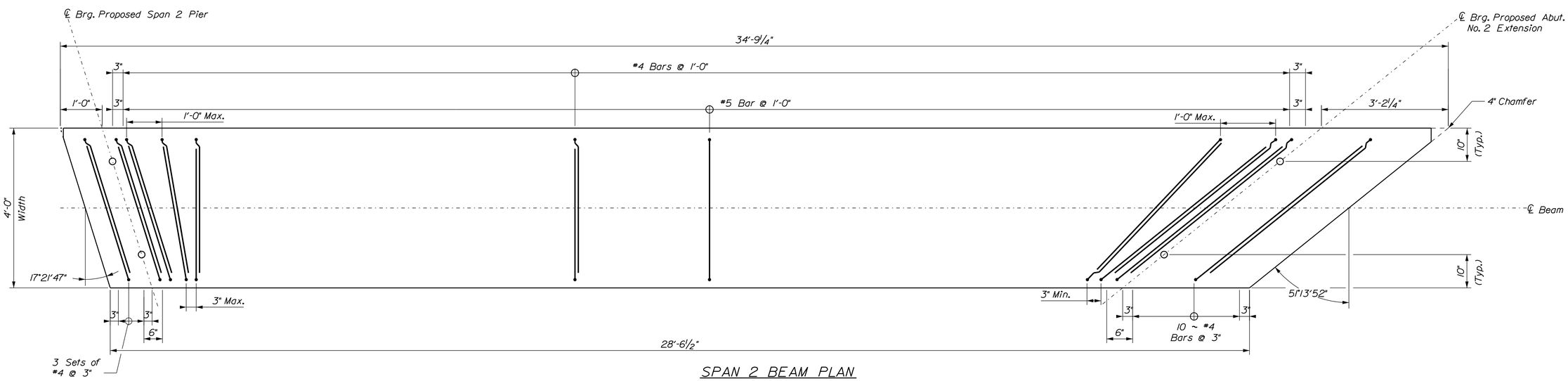

SPAN 2 BEAM PLAN

Scale: 3/4" = 1'-0"

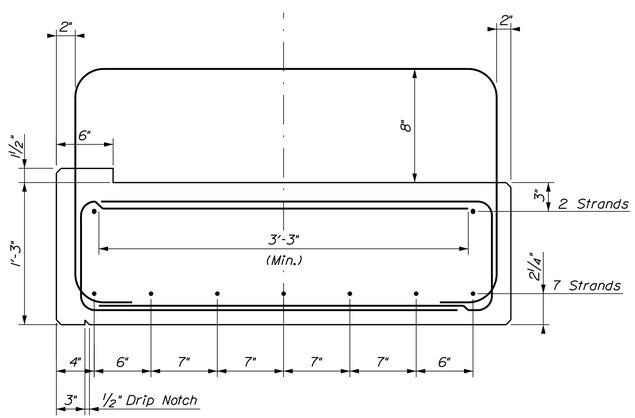

SPAN 1 REINFORCING SECTION

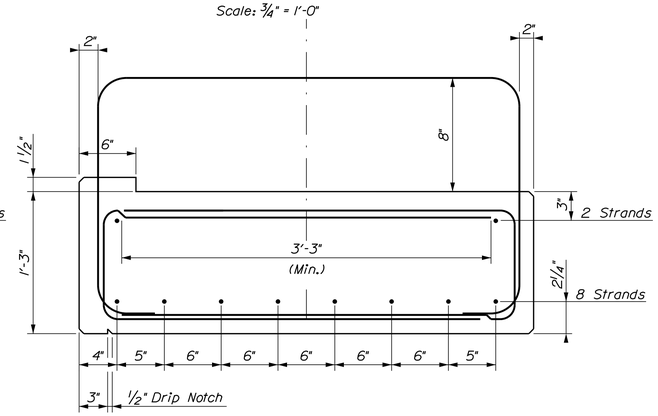

SPAN 2 REINFORCING SECTION

PRECAST CONCRETE BEAM NOTES:

1. Prestressing strands shall be 0.6 inch diameter. The tensioning force is 47 kips per prestressing strand.
2. The top surface of the prestressed beams shall be raked to a surface roughness of ±1/4".
3. Do not drill holes or use powder actuated tools on the prestressed beams without the approval of the Fabrication Engineer.
4. Reinforcing steel shall have a minimum concrete cover of 2" unless otherwise noted.
5. Transverse post-tensioning is not required.
6. All dimensions and details shall meet slab type S48-I5 per Standard Detail Section 535 unless otherwise noted.
7. Lifting loops shall be a maximum of 2'-0" from beam end.

STATE OF MAINE
DEPARTMENT OF TRANSPORTATION

CAPITAL PROJECTS

WIN 024395.01

HIGHWAY PLANS

vhb

PROJ. MANAGER	E. MARTIN	BY	DATE
DESIGN-DETAILED	K.JB	BJM	8/27/2026
CHECKED-REVIEWED	K.JB	CTA	8/27/2026
DESIGN2-DETAILED2			
DESIGN3-DETAILED3			
REVISIONS 1			
REVISIONS 2			
REVISIONS 3			
REVISIONS 4			
FIELD CHANGES			

SANFORD
WASHINGTON STREET BRIDGE

BEAM DETAILS

SHEET NUMBER

172

OF 195

Filename: ...\MSTA\B14_Beam_Details_1of2.dgn Division: HIGHWAY Username: jamesdavis Date:8/27/2026

STRAIGHT BARS

MARK	QTY.	LENGTH	LOCATION
			ABUTMENT 1
A500	1	3'-9"	Pedestal Extension
A501	7	2'-0"	Pedestal Dowels
A502	3	3'-2"	Cheekwall
A800	2	2'-3"	Beam Anchor Dowels
			ABUTMENT 2
A503	32	3'-7"	Abutment Extension Stem
A504	28	8'-11"	Abutment Extension Footing and Stem
A505	20	7'-8"	Abutment Extension Footing
A506	27	2'-0"	Abutment Extension Stem
A800	2	2'-3"	Beam Anchor Dowels
A801	90	3'-0"	Abutment Extension Footing
			PIER
P500	26	2'-10"	Pedestal Extension Dowels
P501	1	5'-3"	Pedestal Extension
P502	1	5'-10"	Pedestal Extension
P800	4	2'-3"	Beam Anchor Dowels
			SIDEWALK SLAB
S500	123	10'-10"	Span 1 and 2 Sidewalk
S501	23	25'-0"	Span 1 Sidewalk
S502	11	35'-8"	Span 2 Sidewalk
S503	13	28'-5"	Span 2 Sidewalk
S504	2	6'-4"	Span 2 Sidewalk

BENT BARS

MARK	QTY.	LENGTH	TYPE	A	B	C	D	E	F	G	H	O	R	LOCATION
								ABUTMENT 1						
A550	8	4'-4"	L	2'-8"	1'-8"									Pedestal Extension
A551	3	4'-5"	L	2'-11"	1'-6"									Pedestal Extension into Cheekwall
A552	3	4'-11"	L	3'-11"	1'-0"									Pedestal Extension into Cheekwall
A553	10	4'-10"	L	4'-2"	0'-8"									Cheekwall
A554	6	3'-2"	L	1'-2"	2'-0"									Cheekwall
A555	6	3'-2"	L	1'-10"	1'-4"									Cheekwall
								ABUTMENT 2						
A557	20	7'-4"	L	4'-8"	2'-8"									Abutment Extension Stem
A558	4	9'-4"	L	7'-2"	2'-2"									Abutment Extension Stem
A559	20	6'-3"	L	4'-3"	2'-0"									Abutment Extension Footing
A560	4	5'-6"	A				2'-5"	3'-1"			1'-11 1/2"			Cheekwall
A561	4	5'-0"	A				1'-11"	3'-1"			2'-5"			Cheekwall
A562	4	4'-4"	L	1'-11"	2'-5"									Cheekwall
									PIER					
P550	12	4'-7"	L	3'-11"	0'-8"									Cheekwall
P551	10	4'-5"	L	2'-7"	1'-10"									Pedestal Extension
P552	3	6'-1"	L	4'-3"	1'-10"									Pedestal Extension
P553	3	7'-8"	V				1'-10"	5'-10"			5'-7"			Pedestal Extension
								SIDEWALK SLAB						

TYPE - BENDING DIAGRAMS

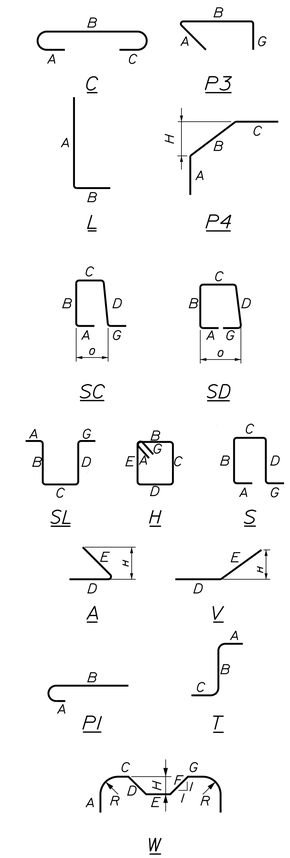

All dimensions are out-to-out of bar.

Bending details and hooks shall conform to the recommendations of the current revision of ACI Standard 315 and ACI Standard 318.

Reinforcing Bar: ASTM A615, Grade 60
ASTM A1035, Type CS, Grade 100
ASTM D7957, Glass Fiber Reinforced Polymer

GENERAL NOTES

1. The first two digits following the letter(s) of the mark indicate the size of the bar:

   Mark "A502" = bar size #5
   Mark "B805" = bar size #8
   Mark "S650" = bar size #6

2. Bar Marks ending in a letter indicate the following:

   c = Low Carbon Chromium

   p = Glass Fiber Reinforced Polymer

STATE OF MAINE
DEPARTMENT OF TRANSPORTATION

CAPITAL PROJECTS

WIN 024395.01

HIGHWAY PLANS

vhb

		BY	DATE
PROJ. MANAGER	E. MARTIN		
DESIGN-DETAILED	K.JB	MJC	8/27/2026
CHECKED-REVIEWED	K.JB	CTA	8/27/2026
DESIGN2-DETAILED2			
DESIGN3-DETAILED3			
REVISIONS 1			
REVISIONS 2			
REVISIONS 3			
REVISIONS 4			
FIELD CHANGES			

SANFORD
WASHINGTON STREET BRIDGE

REINFORCING SCHEDULE

SHEET NUMBER
173
OF 195

Filename: ...\MSTA\B13_Reinf_Sched.dgn Division: HIGHWAY Username: jamesdavis Date:8/27/2026

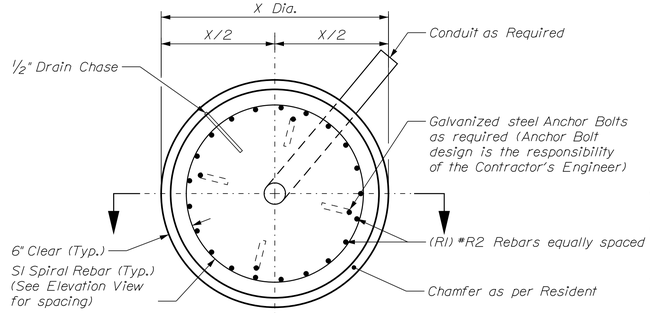

Drilled Shaft Plan View

Not to Scale (See Table for Drilled Shaft & Reinforcement Information)

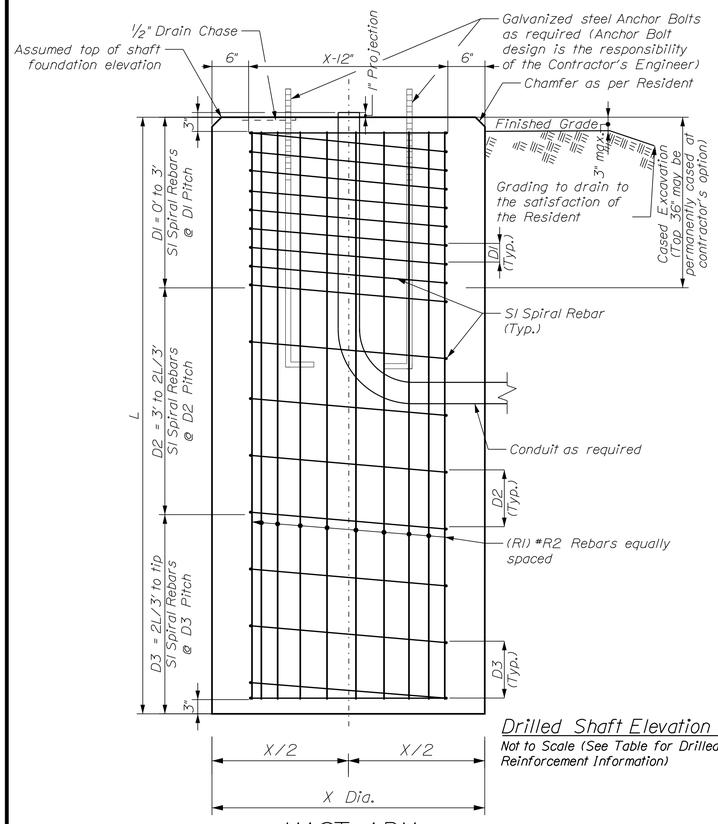

Drilled Shaft Elevation View

Not to Scale (See Table for Drilled Shaft & Reinforcement Information)

MAST ARM

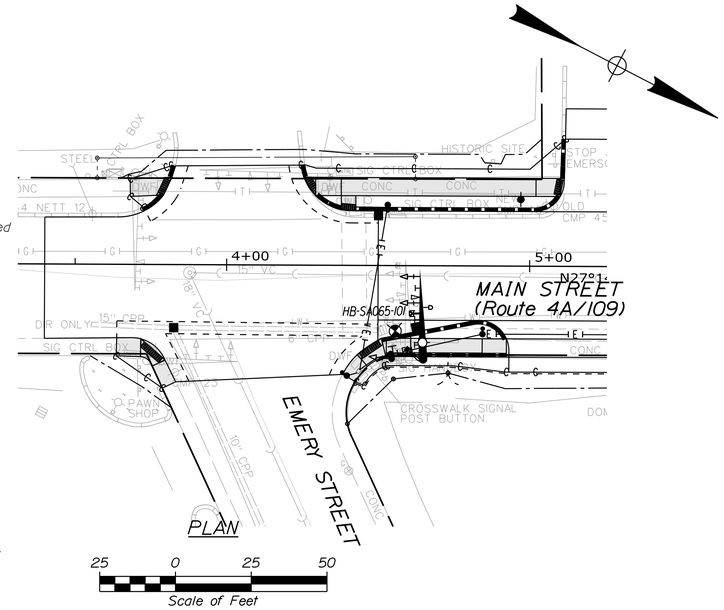

PLAN

BORING LOCATION PLAN LEGEND

BB-SA065-101 Approximate location and designation of cased wash borings by MaineDOT

NOTES:

1. All reinforcing steel is to be grade 60 and conform to MaineDOT Standard Specification requirements along with any project specific Supplementals or Special Provisions.

2. All rebar shall have 6" cover unless otherwise noted.

3. Should there be a discrepancy between these Details and actual observed field conditions report it to the Resident immediately.

4. Do not proceed with dependent work until any such discrepancy is resolved to the satisfaction of the Resident.

5. Concrete to be Class LP with f'c = 5,000 PSI.

6. Foundation sizes are designed based on estimated loading conditions and are subject to change based on the design of the above-ground components and the actual loading conditions at the top of each foundation submitted by the Contractor in accordance with Standard Specification Section 626.44. Any increase in foundation size based on the submitted loading conditions shall be paid for at the unit price bid by the Contractor. Any reduction in foundation size shall be to the benefit of the Department at the unit price bid by the Contractor.

Maine Department of Transportation
Soil/Rock Exploration Log
US CUSTOMARY UNITS

Project: Sanford Intersection Signals
Location: Sanford, Maine
Boring No.: HB-SA065-101
WIN: 24301.00

Driller:	MaineDOT	**Elevation (ft.)**		**Auger ID/OD:**	5" Dia.
Operator:	Daggett/Aaron/Niles	**Datum:**	NAVD88	**Sampler:**	Standard Split Spoon
Logged By:	B. Wilder	**Rig Type:**	CME 45C	**Hammer Wt./Fall:**	140#/30"
Date Start/Finish:	10/8/2019; 14:15-15:00	**Drilling Method:**	Solid Stem Auger	**Core Barrel:**	N/A
Boring Location:	TBD	**Casing ID/OD:**	N/A	**Water Level*:**	None Observed
Hammer Efficiency Factor:	0.886	**Hammer Type:**	Automatic ☒ Hydraulic ☐ Rope & Cathead ☐		

Definitions:
D = Split Spoon Sample
MD = Unsuccessful Split Spoon Sample Attempt
U = Thin Wall Tube Sample
MU = Unsuccessful Thin Wall Tube Sample Attempt
V = Field Vane Shear Test, PP = Pocket Penetrometer
MV = Unsuccessful Field Vane Shear Test Attempt
R = Rock Core Sample
SSA = Solid Stem Auger
HSA = Hollow Stem Auger
RC = Roller Cone
WOH = Weight of 140lb. Hammer
WORC = Weight of Rods or Casing
WO1P = Weight of One Person
S_u = Peak/Remolded Field Vane Undrained Shear Strength (psf)
$S_{u(lab)}$ = Lab Vane Undrained Shear Strength (psf)
q_p = Unconfined Compressive Strength (ksf)
N-uncorrected = Raw Field SPT N-value
Hammer Efficiency Factor = Rig Specific Annual Calibration Value
N_{60} = SPT N-uncorrected Corrected for Hammer Efficiency
N_{60} = (Hammer Efficiency Factor/60%)*N-uncorrected
T_v = Pocket Torvane Shear Strength (psf)
WC = Water Content, percent
LL = Liquid Limit
PL = Plastic Limit
PI = Plasticity Index
G = Grain Size Analysis
C = Consolidation Test

Depth (ft.)	Sample No.	Pen./Rec. (in.)	Sample Depth (ft.)	Blows (/6 in.) Shear Strength (psf) or RQD (%)	N-uncorrected	N_{60}	Casing Blows	Elevation (ft.)	Graphic Log	Visual Description and Remarks	Laboratory Testing Results/ AASHTO and Unified Class.
0							SSA	-0.3		4" HMA.	
	1D	24/16	1.00 - 3.00	3/4/4/3	8	12				Brown, moist, loose, fine to coarse SAND, trace gravel, trace silt.	
5	2D	24/8	5.00 - 7.00	2/2/4/8	6	9		-8.5		Similar to above.	
10	3D	24/18	10.00 - 12.00	13/14/18/19	32	47		-12.0		Brown, damp, dense, fine to coarse SAND, some gravel, trace silt.	
15										**Bottom of Exploration at 12.0 feet below ground surface.** NO REFUSAL	
20											
25											

Remarks:

Stratification lines represent approximate boundaries between soil types; transitions may be gradual.

* Water level readings have been made at times and under conditions stated. Groundwater fluctuations may occur due to conditions other than those present at the time measurements were made.

Page 1 of 1
Boring No.: HB-SA065-101

Mast Arm	Location	Drilled Shaft Dimensions				Reinforcing Steel			Spiral Bar Spacing		
		X_{ob}	X_{rs}	L_{ob}	L_{rs}	R1	R2	S1	D1 (in)	D2 (in)	D3 (in)
		Diameter Overburden (feet)	Diameter Rock Socket (feet)	Length Overburden (feet)	Length Rock Socket (feet)	Longitudinal Rebars Quantity	Longitudinal Rebars Size	Spiral Rebars Size	0 to 3 ft	3 ft to 2L/3 ft	2L/3 ft to tip
C-M1	Emery Street and Main Street	3.0	N/A	15.0	N/A	12	#9	#5	4	4	12

STATE OF MAINE
DEPARTMENT OF TRANSPORTATION
CAPITAL PROJECTS
WIN 022642.01
BORING PLANS

STATE OF MAINE Andrew R. Blaisdell 10957 LICENSED PROFESSIONAL ENGINEER

P.E. NUMBER 10957
SIGNATURE
DATE 8/27/2026

		BY	DATE
PROJ. MANAGER	E. MARTIN		
DESIGN-DETAILED	XXX	XXX	8/27/2026
CHECKED-REVIEWED	XXX	XXX	8/27/2026
DESIGN2-DETAILED2			
DESIGN3-DETAILED3			
REVISIONS 1			
REVISIONS 2			
REVISIONS 3			
REVISIONS 4			
FIELD CHANGES			

SANFORD
DOWNTOWN IMPROVEMENTS
MAST ARM FOUNDATION DESIGN

SHEET NUMBER
174
OF 195

Filename: ...\MSTA\Planset\B_001_Borings.dgn Division: HIGHWAY Username: jamesdavis Date:8/27/2026

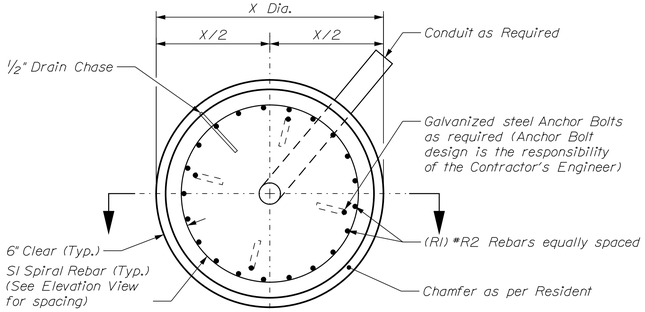

Drilled Shaft Plan View

Not to Scale (See Table for Drilled Shaft & Reinforcement Information)

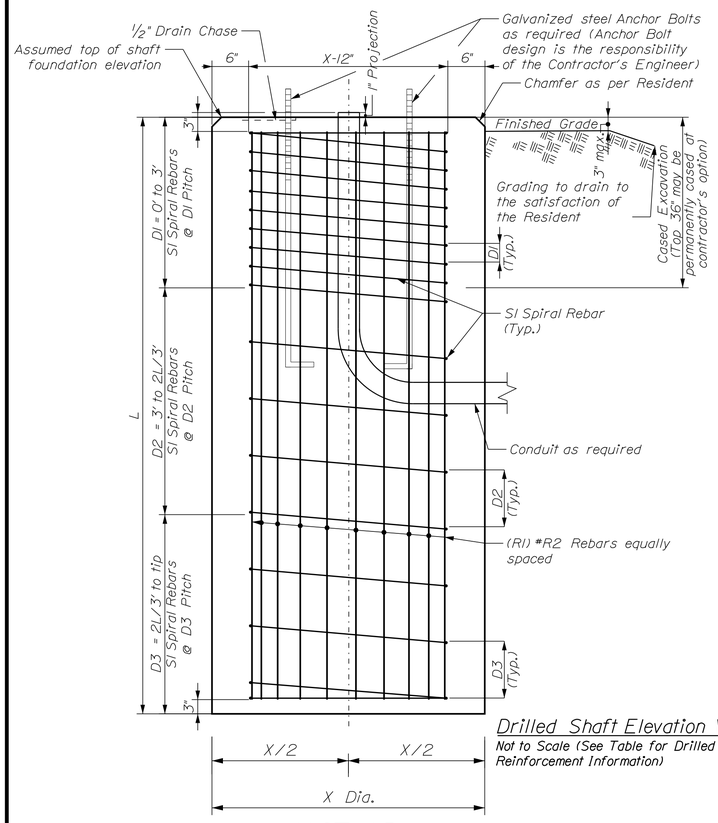

Drilled Shaft Elevation View

Not to Scale (See Table for Drilled Shaft & Reinforcement Information)

MAST ARM

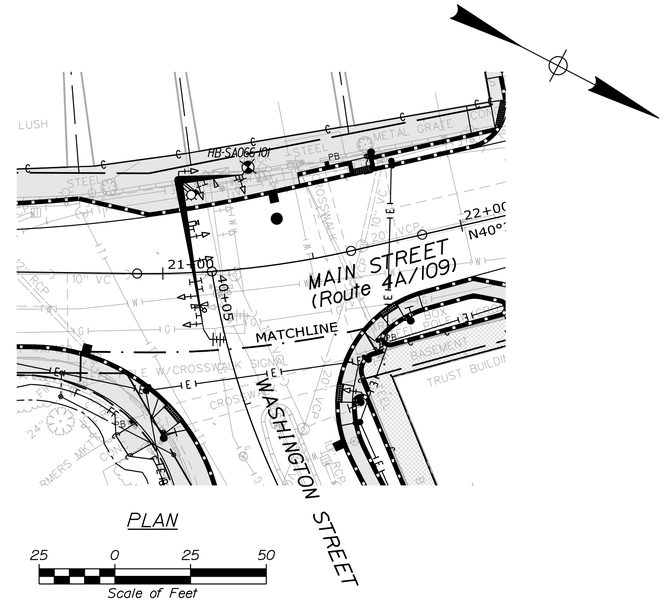

PLAN

BORING LOCATION PLAN LEGEND

BB-SA066-101 — Approximate location and designation of cased wash borings by MaineDOT

NOTES:

1. All reinforcing steel is to be grade 60 and conform to MaineDOT Standard Specification requirements along with any project specific Supplementals or Special Provisions.
2. All rebar shall have 6" cover unless otherwise noted.
3. Should there be a discrepancy between these Details and actual observed field conditions report it to the Resident immediately.
4. Do not proceed with dependent work until any such discrepancy is resolved to the satisfaction of the Resident.
5. Concrete to be Class LP with f'c = 5,000 PSI.
6. Foundation sizes are designed based on estimated loading conditions and are subject to change based on the design of the above-ground components and the actual loading conditions at the top of each foundation submitted by the Contractor in accordance with Standard Specification Section 626.44. Any increase in foundation size based on the submitted loading conditions shall be paid for at the unit price bid by the Contractor. Any reduction in foundation size shall be to the benefit of the Department at the unit price bid by the Contractor.

Maine Department of Transportation
Soil/Rock Exploration Log
US CUSTOMARY UNITS

Project: Sanford Intersection Signals
Location: Sanford, Maine
Boring No.: HB-SA066-101
WIN: 24301.00

Driller:	MaineDOT	**Elevation (ft.)**		**Auger ID/OD:**	5" Dia.
Operator:	Daggett/AQuron/Niles	**Datum:**	NAVD88	**Sampler:**	Standard Split Spoon
Logged By:	B. Wilder	**Rig Type:**	CME 45C	**Hammer Wt./Fall:**	140#/30"
Date Start/Finish:	10/9/2019; 12:30-14:00	**Drilling Method:**	Solid Stem Auger	**Core Barrel:**	N/A
Boring Location:	TBD	**Casing ID/OD:**	N/A	**Water Level*:**	None Observed
Hammer Efficiency Factor:	0.886	**Hammer Type:**	Automatic ☒ Hydraulic ☐ Rope & Cathead ☐		

Definitions:
D = Split Spoon Sample
MD = Unsuccessful Split Spoon Sample Attempt
U = Thin Wall Tube Sample
MU = Unsuccessful Thin Wall Tube Sample Attempt
V = Field Vane Shear Test, PP = Pocket Penetrometer
MV = Unsuccessful Field Vane Shear Test Attempt
R = Rock Core Sample
SSA = Solid Stem Auger
HSA = Hollow Stem Auger
RC = Roller Cone
WOH = Weight of 140lb. Hammer
WORC = Weight of Rods or Casing
WO1P = Weight of One Person
S_u = Peak/Remolded Field Vane Undrained Shear Strength (psf)
$S_{u(lab)}$ = Lab Vane Undrained Shear Strength (psf)
q_p = Unconfined Compressive Strength (ksf)
N-uncorrected = Raw Field SPT N-value
Hammer Efficiency Factor = Rig Specific Annual Calibration Value
N_{60} = SPT N-uncorrected Corrected for Hammer Efficiency
N_{60} = (Hammer Efficiency Factor/60%)*N-uncorrected
T_v = Pocket Torvane Shear Strength (psf)
WC = Water Content, percent
LL = Liquid Limit
PL = Plastic Limit
PI = Plasticity Index
G = Grain Size Analysis
C = Consolidation Test

Depth (ft.)	Sample No.	Pen./Rec. (in.)	Sample Depth (ft.)	Blows (/6 in.) Shear Strength (psf) or RQD (%)	N-uncorrected	N_{60}	Casing Blows	Elevation (ft.)	Graphic Log	Visual Description and Remarks	Laboratory Testing Results/ AASHTO and Unified Class.
0							SSA	-0.3		3" Layer of Brick.	0.3
								-1.5		Layer of Gravel.	1.5
										Soft Concrete.	
	1A		3.00 - 5.50	Off Auger							
5	1D	24/15	5.50 - 7.50	8/8/8/9	16	24		-5.5		Brown, damp, medium dense, fine to coarse SAND, little gravel, trace silt.	5.5
10	2D	24/20	10.00 - 12.00	13/20/13/14	33	49				Similar to above, except dense.	
15	3D	24/17	15.00 - 17.00	14/14/21/34	35	52		-15.0		Brown, damp, dense, fine to coarse SAND, little gravel, trace silt.	15.0
20	4D	24/18	20.00 - 22.00	20/26/28/47	54	80		-22.0		Similar to above, except very dense.	
										Bottom of Exploration at 22.0 feet below ground surface. NO REFUSAL	22.0
25											

Remarks:

Stratification lines represent approximate boundaries between soil types; transitions may be gradual.
*Water level readings have been made at times and under conditions stated. Groundwater fluctuations may occur due to conditions other than those present at the time measurements were made.

Page 1 of 1
Boring No.: HB-SA066-101

Mast Arm	Location	Drilled Shaft Dimensions				Reinforcing Steel			Spiral Bar Spacing		
		X_{ob}	X_{rs}	L_{ob}	L_{rs}	R1	R2	S1	D1 (in)	D2 (in)	D3 (in)
		Diameter Overburden (feet)	Diameter Rock Socket (feet)	Length Overburden (feet)	Length Rock Socket (feet)	Longitudinal Rebars Quantity	Longitudinal Rebars Size	Spiral Rebars Size	0 to 3 ft	3 ft to 2L/3 ft	2L/3 ft to tip
A-M1	Washington Street and Main Street	3.0	N/A	15.0	N/A	12	#9	#5	4	4	12

STATE OF MAINE
DEPARTMENT OF TRANSPORTATION
CAPITAL PROJECTS
WIN 022642.01
BORING PLANS

STATE OF MAINE Andrew R. Blaisdell 10957 LICENSED PROFESSIONAL ENGINEER

P.E. NUMBER 10957
SIGNATURE
DATE 8/27/2026

		BY	DATE
PROJ. MANAGER	E. MARTIN		
DESIGN-DETAILED	XXX	XXX	8/27/2026
CHECKED-REVIEWED	XXX	XXX	8/27/2026
DESIGN2-DETAILED2			
DESIGN3-DETAILED3			
REVISIONS 1			
REVISIONS 2			
REVISIONS 3			
REVISIONS 4			
FIELD CHANGES			

SANFORD
DOWNTOWN IMPROVEMENTS
MAST ARM FOUNDATION DESIGN

SHEET NUMBER
175
OF 195

Filename: ...\MSTA\Planset\B_001_Borings.dgn Division: HIGHWAY Username: jamesdavis Date:8/27/2026

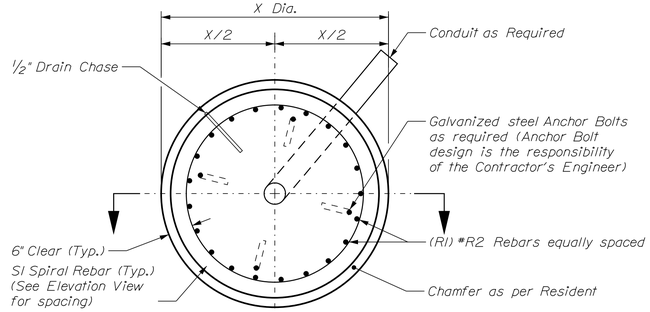

Drilled Shaft Plan View

Not to Scale (See Table for Drilled Shaft & Reinforcement Information)

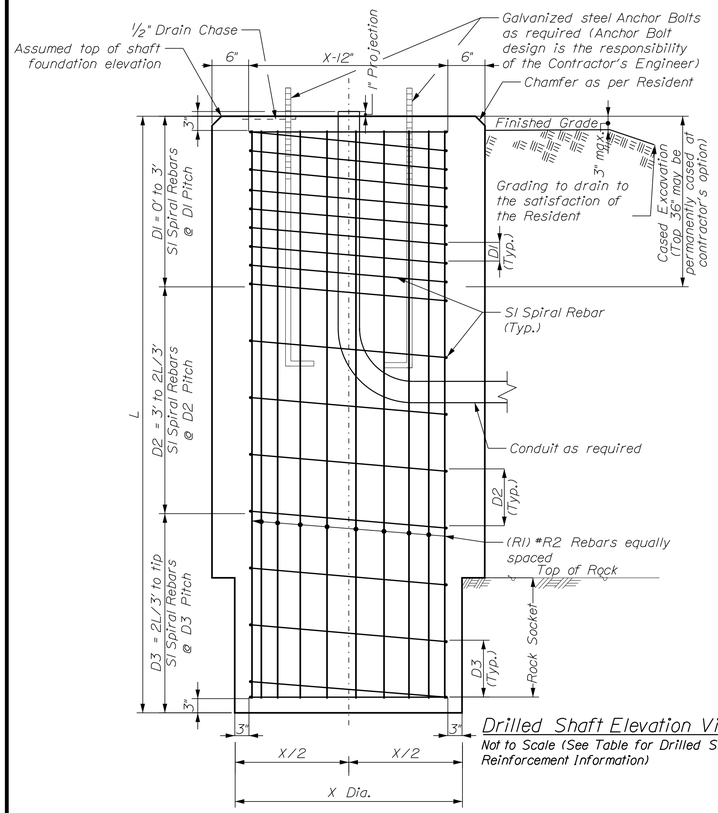

Drilled Shaft Elevation View

Not to Scale (See Table for Drilled Shaft & Reinforcement Information)

MAST ARM

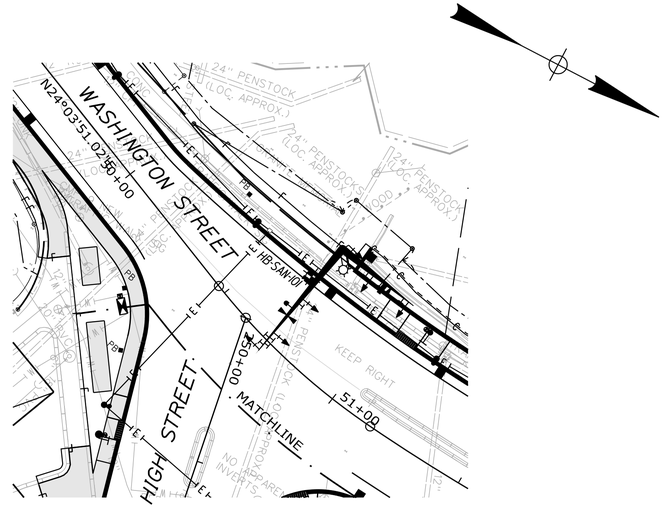

PLAN

25 0 25 50

Scale of Feet

BORING LOCATION PLAN LEGEND

BB-SAN-101 — Approximate location and designation of cased wash borings by MaineDOT

NOTES:

1. All reinforcing steel is to be grade 60 and conform to MaineDOT Standard Specification requirements along with any project specific Supplementals or Special Provisions.
2. All rebar shall have 3" cover unless otherwise noted.
3. Should there be a discrepancy between these Details and actual observed field conditions report it to the Resident immediately.
4. Do not proceed with dependent work until any such discrepancy is resolved to the satisfaction of the Resident.
5. Concrete to be Class LP with f'c = 5,000 PSI.
6. Item 626.43 (Mast Arm) shall be 15' long, unless competent rock is encountered at 13' below top of shaft or less, in which case a rock socket shall be provided in accordance with the dimensions provided in the summary table.
7. Foundation sizes are designed based on estimated loading conditions and are subject to change based on the design of the above-ground components and the actual loading conditions at the top of each foundation submitted by the Contractor in accordance with Standard Specification Section 626.44. Any increase in foundation size based on the submitted loading conditions shall be paid for at the unit price bid by the Contractor. Any reduction in foundation size shall be to the benefit of the Department at the unit price bid by the Contractor.

Maine Department of Transportation
Soil/Rock Exploration Log
US CUSTOMARY UNITS

Project: Intersection Washington St. and High St.
Location: Sanford, Maine
Boring No.: HB-SAN-101
WIN: 24395.01

Driller:	MaineDOT	**Elevation (ft.)**		**Auger ID/OD:**	5" Solid Stem
Operator:	Daggett/Jay	**Datum:**	NAVD88	**Sampler:**	Standard Split Spoon
Logged By:	B. Wilder	**Rig Type:**	CME 45C	**Hammer Wt./Fall:**	140#/30"
Date Start/Finish:	8/24/2021; 08:00-11:00	**Drilling Method:**	Cased Wash Boring	**Core Barrel:**	NQ-2"
Boring Location:	50+58.7, 21.8 ft Lt.	**Casing ID/OD:**	NW-3"	**Water Level*:**	5.0 ft bgs
Hammer Efficiency Factor:	0.89	**Hammer Type:**	Automatic ☒ Hydraulic ☐ Rope & Cathead ☐		

Definitions:
D = Split Spoon Sample
MD = Unsuccessful Split Spoon Sample Attempt
U = Thin Wall Tube Sample
MU = Unsuccessful Thin Wall Tube Sample Attempt
V = Field Vane Shear Test, PP = Pocket Penetrometer
MV = Unsuccessful Field Vane Shear Test Attempt
R = Rock Core Sample
SSA = Solid Stem Auger
HSA = Hollow Stem Auger
RC = Roller Cone
WOH = Weight of 140lb. Hammer
WORC = Weight of Rods or Casing
WO1P = Weight of One Person
S_u = Peak/Remolded Field Vane Undrained Shear Strength (psf)
S_u(lab) = Lab Vane Undrained Shear Strength (psf)
q_p = Unconfined Compressive Strength (ksf)
N-uncorrected = Raw Field SPT N-value
Hammer Efficiency Factor = Rig Specific Annual Calibration Value
N_{60} = SPT N-uncorrected Corrected for Hammer Efficiency
N_{60} = (Hammer Efficiency Factor/60%)*N-uncorrected
T_v = Pocket Torvane Shear Strength (psf)
WC = Water Content, percent
LL = Liquid Limit
PL = Plastic Limit
PI = Plasticity Index
G = Grain Size Analysis
C = Consolidation Test

Depth (ft.)	Sample No.	Pen./Rec. (in.)	Sample Depth (ft.)	Blows (/6 in.) Shear Strength (psf) or RQD (%)	N-uncorrected	N_{60}	Casing Blows	Elevation (ft.)	Graphic Log	Visual Description and Remarks	Laboratory Testing Results/ AASHTO and Unified Class.
0							SSA	-0.8		10" HMA. (0.8)	
	1D	24/19	1.00 - 3.00	9/11/7/6	18	27				Brown, damp, medium dense, fine to coarse SAND, some gravel, little silt, (Fill).	
5	2D	24/17	5.00 - 7.00	4/5/7/7	12	18	12			Brown, damp, medium dense, fine to coarse SAND, some gravel, little silt, (Fill).	
							15				
							47				
							176				
	R1	60/55	9.10 - 14.10	RQD = 23%			#50 NQ-2	-9.1		#50 blows for 0.1 ft. (9.1)	
10										Top of Bedrock at Elev. ?? R1: Bedrock: Intrusive CARBONIFEROUS muscovite-biotite GRANITE; and Interbedded PELITE, LIMESTONE, and DOLOSTONE, [Rindgemere Formation]. Rock Quality = Very Poor R1: Core Times (min:sec) 9.1-10.1 ft (1:15) 10.1-11.1 ft (2:40) 11.1-12.1 ft (3:07) 12.1-13.1 ft (4:46) 13.1-14.1 ft (3:30) 92% Recovery	
15								-14.1		(14.1)	
20											
25											

Bottom of Exploration at 14.1 feet below ground surface.

Remarks:

Stratification lines represent approximate boundaries between soil types; transitions may be gradual.

* Water level readings have been made at times and under conditions stated. Groundwater fluctuations may occur due to conditions other than those present at the time measurements were made.

Page 1 of 1
Boring No.: HB-SAN-101

Mast Arm	Location	Drilled Shaft Dimensions				Reinforcing Steel			Spiral Bar Spacing		
		X_{ob}	X_{rs}	L_{ob}	L_{rs}	R1	R2	S1	D1 (in)	D2 (in)	D3 (in)
		Diameter Overburden (feet)	Diameter Rock Socket (feet)	Length Overburden (feet)	Length Rock Socket (feet)	Longitudinal Rebars Quantity	Longitudinal Rebars Size	Spiral Rebars Size	0 to 3 ft	3 ft to 2L/3 ft	2L/3 ft to tip
B-M1	Washington Street and High Street	3.0	2.5	Less than 13	2.0	12	#9	#5	4	4	12

STATE OF MAINE
DEPARTMENT OF TRANSPORTATION
CAPITAL PROJECTS
WIN 022642.01
BORING PLANS

STATE OF MAINE — Andrew R. Blaisdell 10957 — LICENSED PROFESSIONAL ENGINEER

P.E. NUMBER	10957		
SIGNATURE			
DATE	8/27/2026		

		BY	DATE
PROJ. MANAGER	E. MARTIN		
DESIGN-DETAILED	XXX	XXX	8/27/2026
CHECKED-REVIEWED	XXX	XXX	8/27/2026
DESIGN2-DETAILED2			
DESIGN3-DETAILED3			
REVISIONS 1			
REVISIONS 2			
REVISIONS 3			
REVISIONS 4			
FIELD CHANGES			

SANFORD
DOWNTOWN IMPROVEMENTS
MAST ARM FOUNDATION DESIGN

SHEET NUMBER
176
OF 195

Filename: ...\MSTA\Planset\B_001_Borings.dgn Division: HIGHWAY Username: jamesdavis Date:8/27/2026

LIGHTING LEGEND:

CONDUIT LABEL	L
HANDHOLE LABEL	HH-A5E
NEW POLE AND LUMINAIRE	
NEW HANDHOLE (Junction Box)	
SERVICE PEDESTAL	
UNDERGROUND ELECTRIC	

HANDHOLE (Junction Box) LABELING:

HH-X#Y

- HH = HANDHOLE
- X = FIRST LETTER OF STREET NAME
- # = HANDHOLE NUMBER
- Y = CARDINAL DIRECTION ON STREET

LIGHTING SYSTEM NOTES

1. ALL WORK SHALL CONFORM TO THE LATEST REVISION OF THE STATE OF MAINE ELECTRICAL CODE, NATIONAL ELECTRIC CODE, MAINE DOT STANDARDS & SPECIFICATIONS, AND LOCAL MUNICIPAL CODES.
2. ALL WORK TO BE COORDINATED WITH THE LOCAL PUBLIC UTILITIES. NO CONSTRUCTION SHALL COMMENCE UNTIL THE CONTRACTOR HAS NOTIFIED DIG-SAFE AND ALL UTILITIES HAVE BEEN PROPERLY IDENTIFIED.
3. LOCATION OF EXISTING UTILITIES ARE APPROXIMATE AND HAVE BEEN PLOTTED FROM THE BEST AVAILABLE INFORMATION. CONTRACTOR SHALL VERIFY IN FIELD THE LOCATIONS OF ALL EXISTING UTILITIES. ANY DAMAGE TO THESE UTILITIES SHALL BE THE RESPONSIBILITY OF THE CONTRACTOR.
4. PROVIDE ENOUGH SLACK (CABLE) AT ALL JUNCTION BOXES/HANDHOLES TO ALLOW FOR SPLICING AND REPAIRS TO BE MADE.
5. IDENTIFY AND TAG ALL CIRCUITS AT EACH JUNCTION BOX/HANDHOLE. PROVIDE NUMBERING TAGS ACCORDING TO THE ONE LINE WIRING DIAGRAMS.
6. PRIOR TO BACKFILLING CONDUIT TRENCHES, WARNING TAPE SHALL BE PLACED ONE (1) FOOT ABOVE PIPE IN ALL LOCATIONS.
7. PROVIDE ADDITIONAL PULL STRING IN EVERY CONDUIT.
8. REFER TO TRENCH DETAIL FOR CONDUIT INSTALLATION REQUIREMENTS.

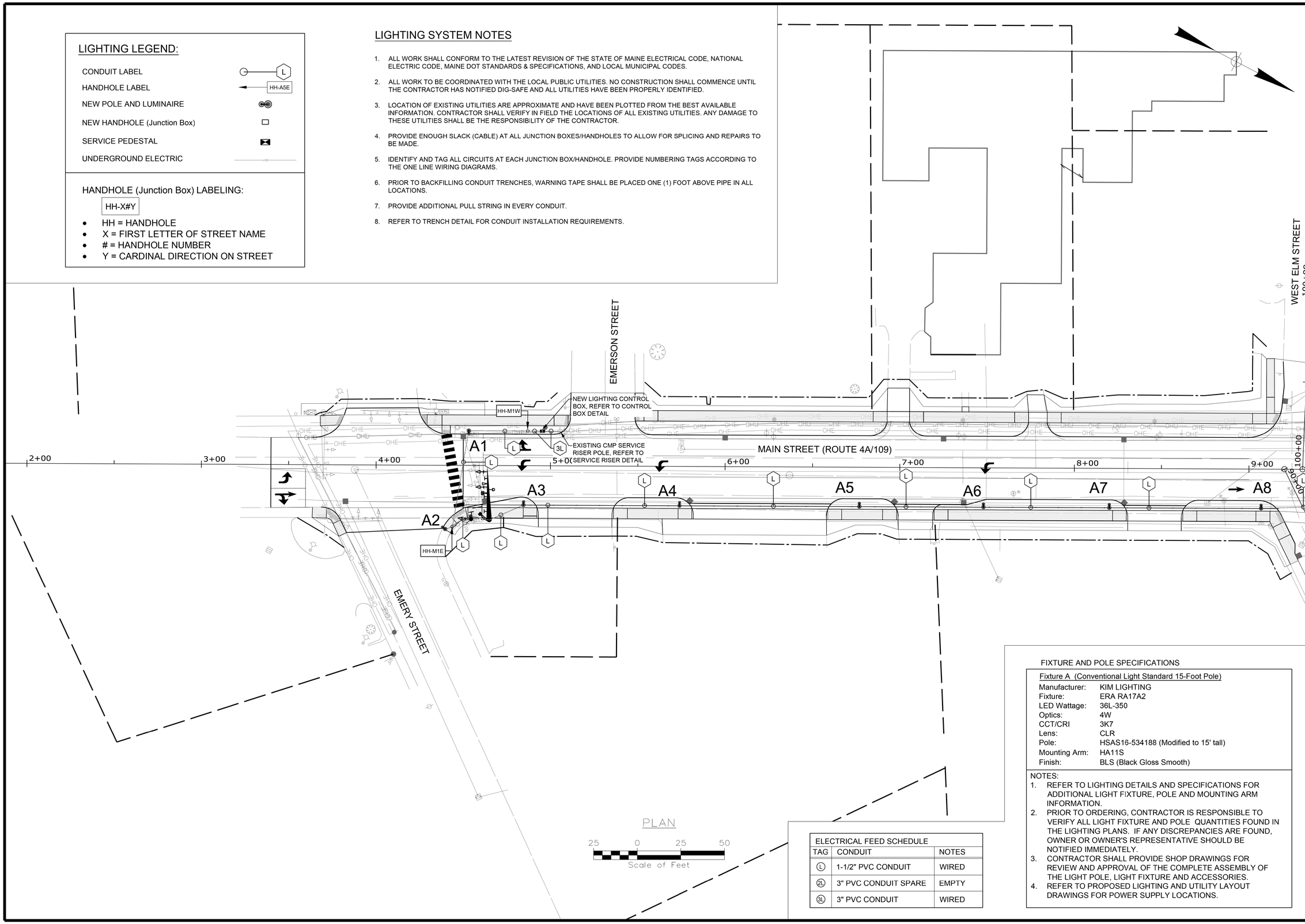

ELECTRICAL FEED SCHEDULE		
TAG	CONDUIT	NOTES
L	1-1/2" PVC CONDUIT	WIRED
2L	3" PVC CONDUIT SPARE	EMPTY
3L	3" PVC CONDUIT	WIRED

FIXTURE AND POLE SPECIFICATIONS

Fixture A (Conventional Light Standard 15-Foot Pole)

Manufacturer:	KIM LIGHTING
Fixture:	ERA RA17A2
LED Wattage:	36L-350
Optics:	4W
CCT/CRI	3K7
Lens:	CLR
Pole:	HSAS16-534188 (Modified to 15' tall)
Mounting Arm:	HA11S
Finish:	BLS (Black Gloss Smooth)

NOTES:

1. REFER TO LIGHTING DETAILS AND SPECIFICATIONS FOR ADDITIONAL LIGHT FIXTURE, POLE AND MOUNTING ARM INFORMATION.
2. PRIOR TO ORDERING, CONTRACTOR IS RESPONSIBLE TO VERIFY ALL LIGHT FIXTURE AND POLE QUANTITIES FOUND IN THE LIGHTING PLANS. IF ANY DISCREPANCIES ARE FOUND, OWNER OR OWNER'S REPRESENTATIVE SHOULD BE NOTIFIED IMMEDIATELY.
3. CONTRACTOR SHALL PROVIDE SHOP DRAWINGS FOR REVIEW AND APPROVAL OF THE COMPLETE ASSEMBLY OF THE LIGHT POLE, LIGHT FIXTURE AND ACCESSORIES.
4. REFER TO PROPOSED LIGHTING AND UTILITY LAYOUT DRAWINGS FOR POWER SUPPLY LOCATIONS.

STATE OF MAINE
DEPARTMENT OF TRANSPORTATION
CAPITAL PROJECTS
WIN 024395.01
HIGHWAY PLANS

vhb

	BY	DATE
PROJ. MANAGER	E. MARTIN	
DESIGN-DETAILED	MJW	MKW
CHECKED-REVIEWED	EOF	AG
DESIGN2-DETAILED2		
DESIGN3-DETAILED3		
REVISIONS 1		
REVISIONS 2		
REVISIONS 3		
REVISIONS 4		
FIELD CHANGES		7/29/2026

SANFORD DOWNTOWN IMPROVEMENTS

LIGHTING PLANS

SHEET NUMBER

177

OF 195

Date: 05/15/2026
Username: mwelsh
Division: HIGHWAY
Filename: 55303.02-LI.dwg

LIGHTING LEGEND:

CONDUIT LABEL	L
HANDHOLE LABEL	HH-A5E
NEW POLE AND LUMINAIRE	
NEW HANDHOLE (Junction Box)	
SERVICE PEDESTAL	
UNDERGROUND ELECTRIC	

HANDHOLE (Junction Box) LABELING:

HH-X#Y

- HH = HANDHOLE
- X = FIRST LETTER OF STREET NAME
- # = HANDHOLE NUMBER
- Y = CARDINAL DIRECTION ON STREET

LIGHTING SYSTEM NOTES

1. ALL WORK SHALL CONFORM TO THE LATEST REVISION OF THE STATE OF MAINE ELECTRICAL CODE, NATIONAL ELECTRIC CODE, MAINE DOT STANDARDS & SPECIFICATIONS, AND LOCAL MUNICIPAL CODES.
2. ALL WORK TO BE COORDINATED WITH THE LOCAL PUBLIC UTILITIES. NO CONSTRUCTION SHALL COMMENCE UNTIL THE CONTRACTOR HAS NOTIFIED DIG-SAFE AND ALL UTILITIES HAVE BEEN PROPERLY IDENTIFIED.
3. LOCATION OF EXISTING UTILITIES ARE APPROXIMATE AND HAVE BEEN PLOTTED FROM THE BEST AVAILABLE INFORMATION. CONTRACTOR SHALL VERIFY IN FIELD THE LOCATIONS OF ALL EXISTING UTILITIES. ANY DAMAGE TO THESE UTILITIES SHALL BE THE RESPONSIBILITY OF THE CONTRACTOR.
4. PROVIDE ENOUGH SLACK (CABLE) AT ALL JUNCTION BOXES/HANDHOLES TO ALLOW FOR SPLICING AND REPAIRS TO BE MADE.
5. IDENTIFY AND TAG ALL CIRCUITS AT EACH JUNCTION BOX/HANDHOLE. PROVIDE NUMBERING TAGS ACCORDING TO THE ONE LINE WIRING DIAGRAMS.
6. PRIOR TO BACKFILLING CONDUIT TRENCHES, WARNING TAPE SHALL BE PLACED ONE (1) FOOT ABOVE PIPE IN ALL LOCATIONS.
7. PROVIDE ADDITIONAL PULL STRING IN EVERY CONDUIT.
8. REFER TO TRENCH DETAIL FOR CONDUIT INSTALLATION REQUIREMENTS.

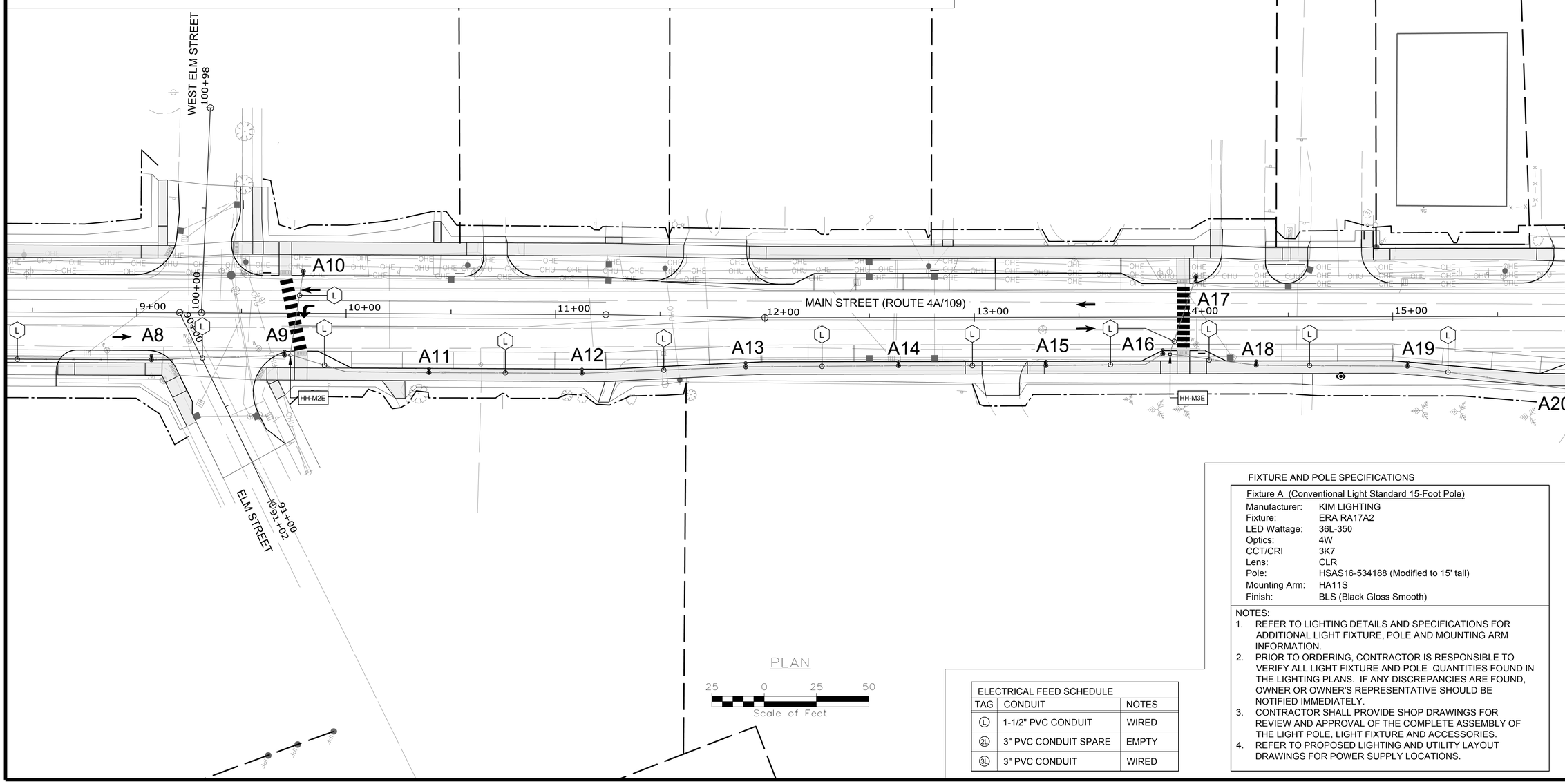

ELECTRICAL FEED SCHEDULE		
TAG	CONDUIT	NOTES
L	1-1/2" PVC CONDUIT	WIRED
2L	3" PVC CONDUIT SPARE	EMPTY
3L	3" PVC CONDUIT	WIRED

FIXTURE AND POLE SPECIFICATIONS

Fixture A (Conventional Light Standard 15-Foot Pole)

Manufacturer:	KIM LIGHTING
Fixture:	ERA RA17A2
LED Wattage:	36L-350
Optics:	4W
CCT/CRI	3K7
Lens:	CLR
Pole:	HSAS16-534188 (Modified to 15' tall)
Mounting Arm:	HA11S
Finish:	BLS (Black Gloss Smooth)

NOTES:

1. REFER TO LIGHTING DETAILS AND SPECIFICATIONS FOR ADDITIONAL LIGHT FIXTURE, POLE AND MOUNTING ARM INFORMATION.
2. PRIOR TO ORDERING, CONTRACTOR IS RESPONSIBLE TO VERIFY ALL LIGHT FIXTURE AND POLE QUANTITIES FOUND IN THE LIGHTING PLANS. IF ANY DISCREPANCIES ARE FOUND, OWNER OR OWNER'S REPRESENTATIVE SHOULD BE NOTIFIED IMMEDIATELY.
3. CONTRACTOR SHALL PROVIDE SHOP DRAWINGS FOR REVIEW AND APPROVAL OF THE COMPLETE ASSEMBLY OF THE LIGHT POLE, LIGHT FIXTURE AND ACCESSORIES.
4. REFER TO PROPOSED LIGHTING AND UTILITY LAYOUT DRAWINGS FOR POWER SUPPLY LOCATIONS.

STATE OF MAINE
DEPARTMENT OF TRANSPORTATION
CAPITAL PROJECTS
WIN 024395.01
HIGHWAY PLANS

vhb

		BY	DATE
PROJ. MANAGER	E. MARTIN		
DESIGN-DETAILED	MJW	MKW	7/29/2026
CHECKED-REVIEWED	ECF	AG	
DESIGN2-DETAILED2			
DESIGN3-DETAILED3			
REVISIONS 1			
REVISIONS 2			
REVISIONS 3			
REVISIONS 4			
FIELD CHANGES			

SANFORD DOWNTOWN IMPROVEMENTS

LIGHTING PLANS

SHEET NUMBER

178

OF 195

Filename: 55303.02-LI.dwg Division: HIGHWAY Username: mwelsh Date: 05/15/2026

FIXTURE AND POLE SPECIFICATIONS

Fixture A (Conventional Light Standard 15-Foot Pole)

Manufacturer:	KIM LIGHTING
Fixture:	ERA RA17A2
LED Wattage:	36L-350
Optics:	4W
CCT/CRI	3K7
Lens:	CLR
Pole:	HSAS16-534188 (Modified to 15' tall)
Mounting Arm:	HA11S
Finish:	BLS (Black Gloss Smooth)

NOTES:
1. REFER TO LIGHTING DETAILS AND SPECIFICATIONS FOR ADDITIONAL LIGHT FIXTURE, POLE AND MOUNTING ARM INFORMATION.
2. PRIOR TO ORDERING, CONTRACTOR IS RESPONSIBLE TO VERIFY ALL LIGHT FIXTURE AND POLE QUANTITIES FOUND IN THE LIGHTING PLANS. IF ANY DISCREPANCIES ARE FOUND, OWNER OR OWNER'S REPRESENTATIVE SHOULD BE NOTIFIED IMMEDIATELY.
3. CONTRACTOR SHALL PROVIDE SHOP DRAWINGS FOR REVIEW AND APPROVAL OF THE COMPLETE ASSEMBLY OF THE LIGHT POLE, LIGHT FIXTURE AND ACCESSORIES.
4. REFER TO PROPOSED LIGHTING AND UTILITY LAYOUT DRAWINGS FOR POWER SUPPLY LOCATIONS.

LIGHTING SYSTEM NOTES

1. ALL WORK SHALL CONFORM TO THE LATEST REVISION OF THE STATE OF MAINE ELECTRICAL CODE, NATIONAL ELECTRIC CODE, MAINE DOT STANDARDS & SPECIFICATIONS, AND LOCAL MUNICIPAL CODES.
2. ALL WORK TO BE COORDINATED WITH THE LOCAL PUBLIC UTILITIES. NO CONSTRUCTION SHALL COMMENCE UNTIL THE CONTRACTOR HAS NOTIFIED DIG-SAFE AND ALL UTILITIES HAVE BEEN PROPERLY IDENTIFIED.
3. LOCATION OF EXISTING UTILITIES ARE APPROXIMATE AND HAVE BEEN PLOTTED FROM THE BEST AVAILABLE INFORMATION. CONTRACTOR SHALL VERIFY IN FIELD THE LOCATIONS OF ALL EXISTING UTILITIES. ANY DAMAGE TO THESE UTILITIES SHALL BE THE RESPONSIBILITY OF THE CONTRACTOR.
4. PROVIDE ENOUGH SLACK (CABLE) AT ALL JUNCTION BOXES/HANDHOLES TO ALLOW FOR SPLICING AND REPAIRS TO BE MADE.
5. IDENTIFY AND TAG ALL CIRCUITS AT EACH JUNCTION BOX/HANDHOLE. PROVIDE NUMBERING TAGS ACCORDING TO THE ONE LINE WIRING DIAGRAMS.
6. PRIOR TO BACKFILLING CONDUIT TRENCHES, WARNING TAPE SHALL BE PLACED ONE (1) FOOT ABOVE PIPE IN ALL LOCATIONS.
7. PROVIDE ADDITIONAL PULL STRING IN EVERY CONDUIT.
8. REFER TO TRENCH DETAIL FOR CONDUIT INSTALLATION REQUIREMENTS.

LIGHTING LEGEND:

- CONDUIT LABEL
- HANDHOLE LABEL
- NEW POLE AND LUMINAIRE
- NEW HANDHOLE (Junction Box)
- SERVICE PEDESTAL
- UNDERGROUND ELECTRIC

HANDHOLE (Junction Box) LABELING:

HH-X#Y

- HH = HANDHOLE
- X = FIRST LETTER OF STREET NAME
- # = HANDHOLE NUMBER
- Y = CARDINAL DIRECTION ON STREET

ELECTRICAL FEED SCHEDULE

TAG	CONDUIT	NOTES
L	1-1/2" PVC CONDUIT	WIRED
2L	3" PVC CONDUIT SPARE	EMPTY
3L	3" PVC CONDUIT	WIRED

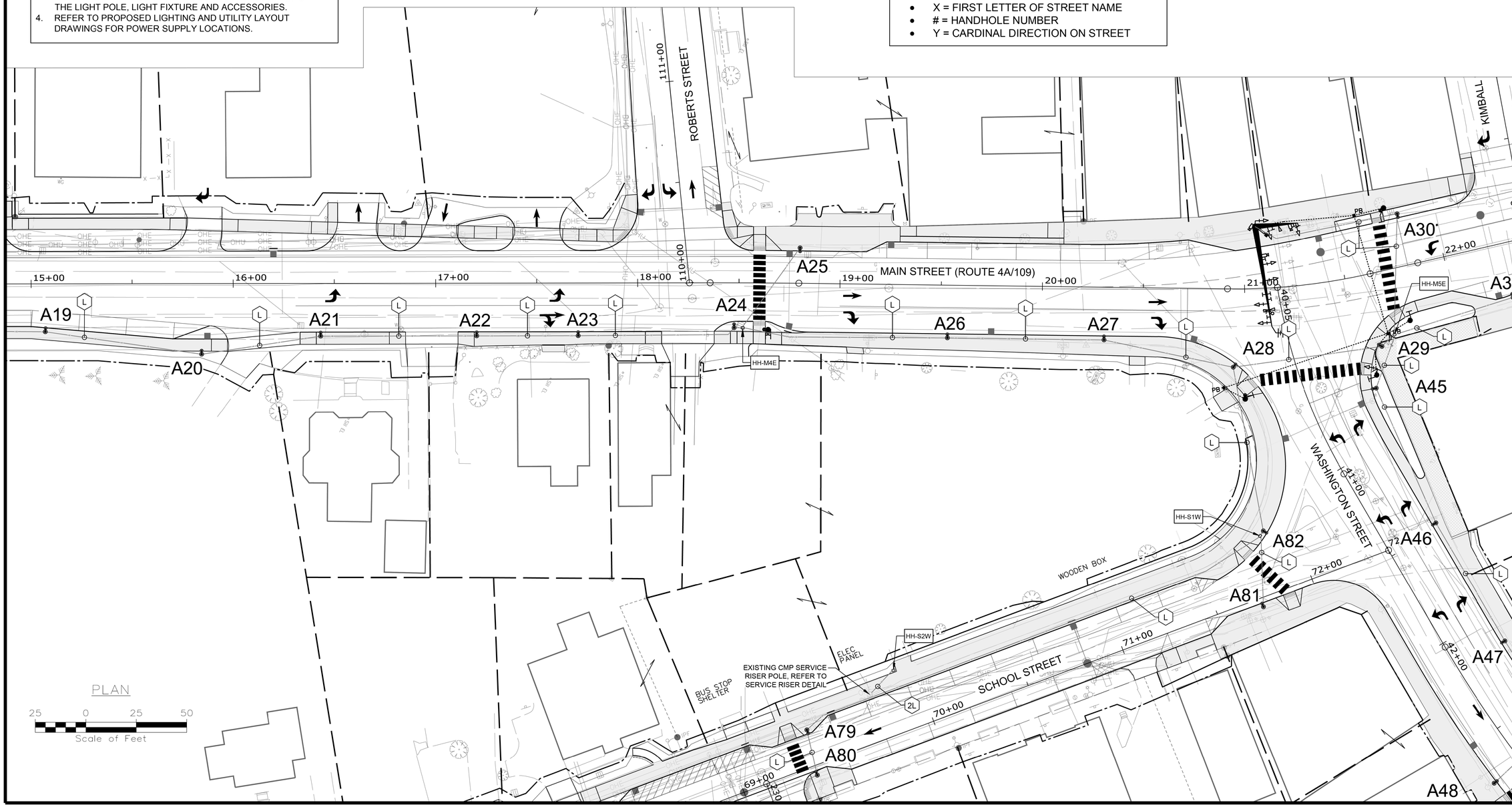

STATE OF MAINE
DEPARTMENT OF TRANSPORTATION
CAPITAL PROJECTS
WIN 024395.01
HIGHWAY PLANS

vhb

PROJ. MANAGER	E. MARTIN		
DESIGN-DETAILED	MJW	BY	DATE
CHECKED-REVIEWED	EGF	MKW	7/29/2026
DESIGN2-DETAILED2		AG	
DESIGN3-DETAILED3			
REVISIONS 1			
REVISIONS 2			
REVISIONS 3			
REVISIONS 4			
FIELD CHANGES			

SANFORD DOWNTOWN IMPROVEMENTS

LIGHTING PLANS

SHEET NUMBER
179
OF 195

Date: 05/15/2026
Username: mwelsh
Division: HIGHWAY
Filename: 55303.02-LI.dwg

LIGHTING LEGEND:

CONDUIT LABEL	L
HANDHOLE LABEL	HH-A5E
NEW POLE AND LUMINAIRE	
NEW HANDHOLE (Junction Box)	
SERVICE PEDESTAL	
UNDERGROUND ELECTRIC	

HANDHOLE (Junction Box) LABELING:

HH-X#Y

- HH = HANDHOLE
- X = FIRST LETTER OF STREET NAME
- # = HANDHOLE NUMBER
- Y = CARDINAL DIRECTION ON STREET

LIGHTING SYSTEM NOTES

1. ALL WORK SHALL CONFORM TO THE LATEST REVISION OF THE STATE OF MAINE ELECTRICAL CODE, NATIONAL ELECTRIC CODE, MAINE DOT STANDARDS & SPECIFICATIONS, AND LOCAL MUNICIPAL CODES.
2. ALL WORK TO BE COORDINATED WITH THE LOCAL PUBLIC UTILITIES. NO CONSTRUCTION SHALL COMMENCE UNTIL THE CONTRACTOR HAS NOTIFIED DIG-SAFE AND ALL UTILITIES HAVE BEEN PROPERLY IDENTIFIED.
3. LOCATION OF EXISTING UTILITIES ARE APPROXIMATE AND HAVE BEEN PLOTTED FROM THE BEST AVAILABLE INFORMATION. CONTRACTOR SHALL VERIFY IN FIELD THE LOCATIONS OF ALL EXISTING UTILITIES. ANY DAMAGE TO THESE UTILITIES SHALL BE THE RESPONSIBILITY OF THE CONTRACTOR.
4. PROVIDE ENOUGH SLACK (CABLE) AT ALL JUNCTION BOXES/HANDHOLES TO ALLOW FOR SPLICING AND REPAIRS TO BE MADE.
5. IDENTIFY AND TAG ALL CIRCUITS AT EACH JUNCTION BOX/HANDHOLE. PROVIDE NUMBERING TAGS ACCORDING TO THE ONE LINE WIRING DIAGRAMS.
6. PRIOR TO BACKFILLING CONDUIT TRENCHES, WARNING TAPE SHALL BE PLACED ONE (1) FOOT ABOVE PIPE IN ALL LOCATIONS.
7. PROVIDE ADDITIONAL PULL STRING IN EVERY CONDUIT.
8. REFER TO TRENCH DETAIL FOR CONDUIT INSTALLATION REQUIREMENTS.

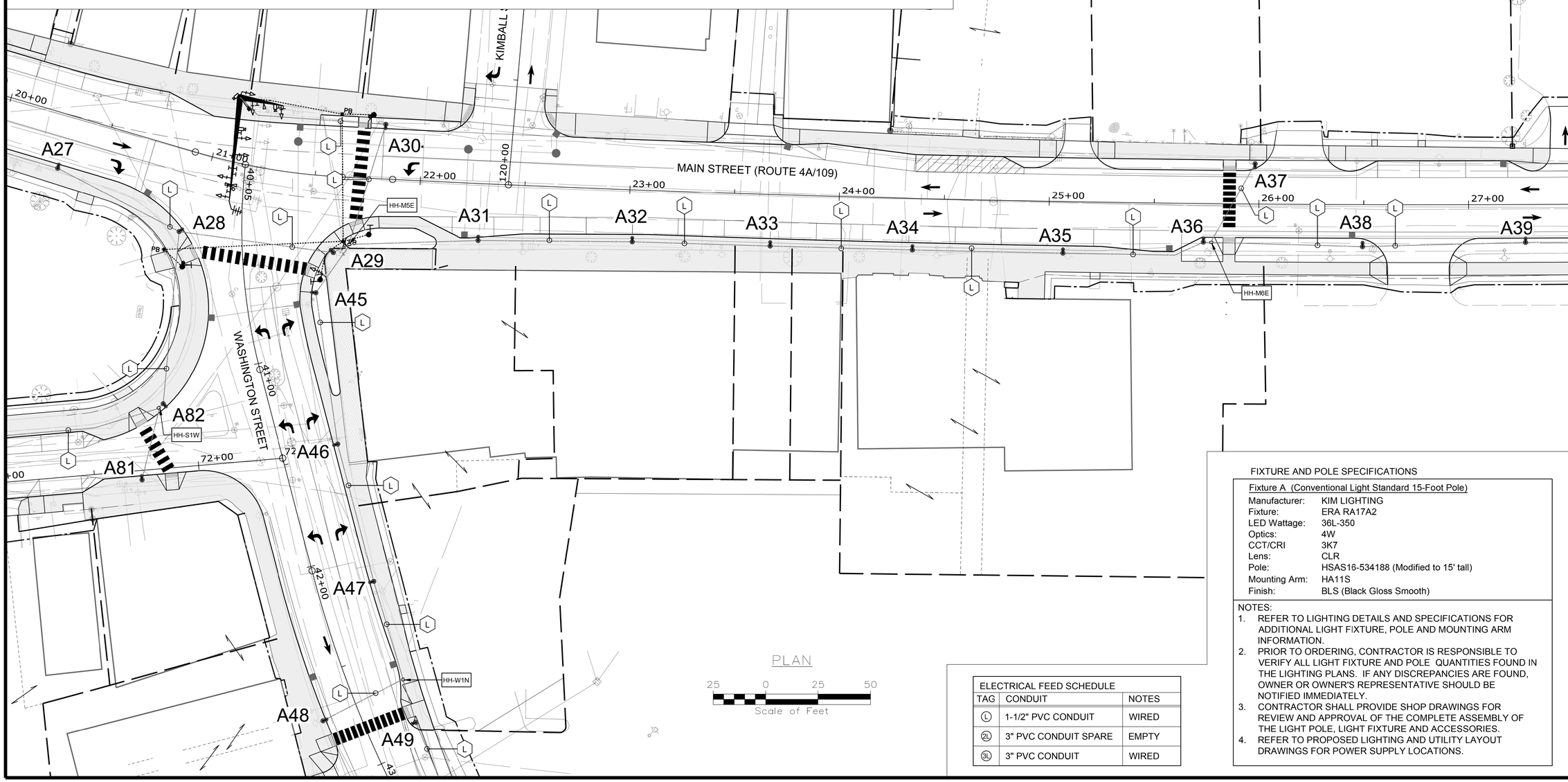

FIXTURE AND POLE SPECIFICATIONS

Fixture A (Conventional Light Standard 15-Foot Pole)

Manufacturer:	KIM LIGHTING
Fixture:	ERA RA17A2
LED Wattage:	36L-350
Optics:	4W
CCT/CRI	3K7
Lens:	CLR
Pole:	HSAS16-534188 (Modified to 15' tall)
Mounting Arm:	HA11S
Finish:	BLS (Black Gloss Smooth)

NOTES:

1. REFER TO LIGHTING DETAILS AND SPECIFICATIONS FOR ADDITIONAL LIGHT FIXTURE, POLE AND MOUNTING ARM INFORMATION.
2. PRIOR TO ORDERING, CONTRACTOR IS RESPONSIBLE TO VERIFY ALL LIGHT FIXTURE AND POLE QUANTITIES FOUND IN THE LIGHTING PLANS. IF ANY DISCREPANCIES ARE FOUND, OWNER OR OWNER'S REPRESENTATIVE SHOULD BE NOTIFIED IMMEDIATELY.
3. CONTRACTOR SHALL PROVIDE SHOP DRAWINGS FOR REVIEW AND APPROVAL OF THE COMPLETE ASSEMBLY OF THE LIGHT POLE, LIGHT FIXTURE AND ACCESSORIES.
4. REFER TO PROPOSED LIGHTING AND UTILITY LAYOUT DRAWINGS FOR POWER SUPPLY LOCATIONS.

ELECTRICAL FEED SCHEDULE

TAG	CONDUIT	NOTES
L	1-1/2" PVC CONDUIT	WIRED
2L	3" PVC CONDUIT SPARE	EMPTY
3L	3" PVC CONDUIT	WIRED

STATE OF MAINE
DEPARTMENT OF TRANSPORTATION
CAPITAL PROJECTS
WIN 024395.01
HIGHWAY PLANS

vhb

PROJ. MANAGER	E. MARTIN	BY	DATE
DESIGN-DETAILED	MJW	MKW	7/29/2026
CHECKED-REVIEWED	EGF	AG	
DESIGN2-DETAILED2			
DESIGN3-DETAILED3			
REVISIONS 1			
REVISIONS 2			
REVISIONS 3			
REVISIONS 4			
FIELD CHANGES			

SANFORD
DOWNTOWN IMPROVEMENTS

LIGHTING PLANS

SHEET NUMBER
180
OF 195

Filename: 55303.02-LI.dwg
Division: HIGHWAY
Username: mwelsh
Date: 05/15/2026

LIGHTING LEGEND:

CONDUIT LABEL	L
HANDHOLE LABEL	HH-A5E
NEW POLE AND LUMINAIRE	
NEW HANDHOLE (Junction Box)	
SERVICE PEDESTAL	
UNDERGROUND ELECTRIC	

HANDHOLE (Junction Box) LABELING:

HH-X#Y

- HH = HANDHOLE
- X = FIRST LETTER OF STREET NAME
- # = HANDHOLE NUMBER
- Y = CARDINAL DIRECTION ON STREET

LIGHTING SYSTEM NOTES

1. ALL WORK SHALL CONFORM TO THE LATEST REVISION OF THE STATE OF MAINE ELECTRICAL CODE, NATIONAL ELECTRIC CODE, MAINE DOT STANDARDS & SPECIFICATIONS, AND LOCAL MUNICIPAL CODES.
2. ALL WORK TO BE COORDINATED WITH THE LOCAL PUBLIC UTILITIES. NO CONSTRUCTION SHALL COMMENCE UNTIL THE CONTRACTOR HAS NOTIFIED DIG-SAFE AND ALL UTILITIES HAVE BEEN PROPERLY IDENTIFIED.
3. LOCATION OF EXISTING UTILITIES ARE APPROXIMATE AND HAVE BEEN PLOTTED FROM THE BEST AVAILABLE INFORMATION. CONTRACTOR SHALL VERIFY IN FIELD THE LOCATIONS OF ALL EXISTING UTILITIES. ANY DAMAGE TO THESE UTILITIES SHALL BE THE RESPONSIBILITY OF THE CONTRACTOR.
4. PROVIDE ENOUGH SLACK (CABLE) AT ALL JUNCTION BOXES/HANDHOLES TO ALLOW FOR SPLICING AND REPAIRS TO BE MADE.
5. IDENTIFY AND TAG ALL CIRCUITS AT EACH JUNCTION BOX/HANDHOLE. PROVIDE NUMBERING TAGS ACCORDING TO THE ONE LINE WIRING DIAGRAMS.
6. PRIOR TO BACKFILLING CONDUIT TRENCHES, WARNING TAPE SHALL BE PLACED ONE (1) FOOT ABOVE PIPE IN ALL LOCATIONS.
7. PROVIDE ADDITIONAL PULL STRING IN EVERY CONDUIT.
8. REFER TO TRENCH DETAIL FOR CONDUIT INSTALLATION REQUIREMENTS.

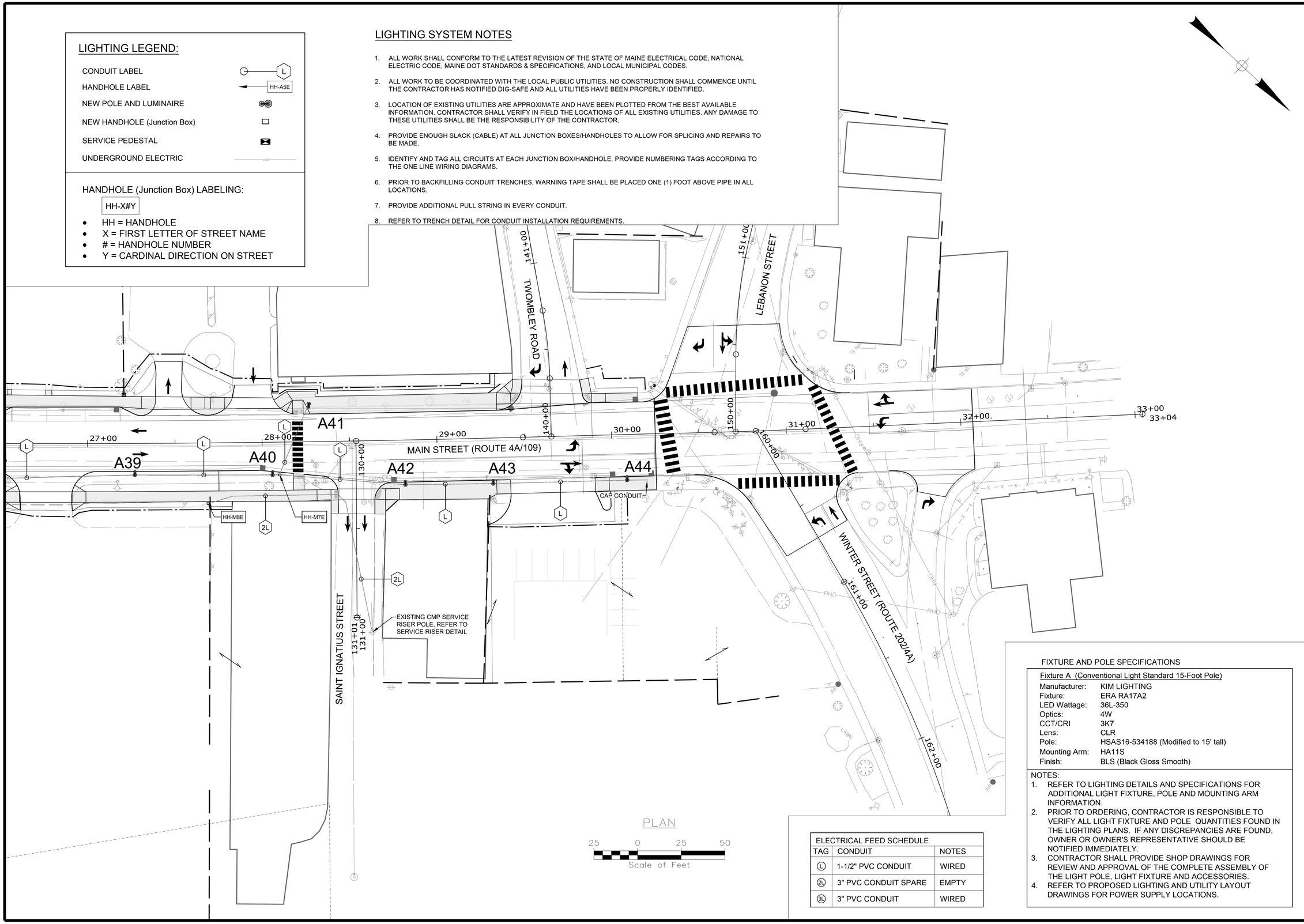

ELECTRICAL FEED SCHEDULE		
TAG	CONDUIT	NOTES
L	1-1/2" PVC CONDUIT	WIRED
2L	3" PVC CONDUIT SPARE	EMPTY
3L	3" PVC CONDUIT	WIRED

FIXTURE AND POLE SPECIFICATIONS

Fixture A (Conventional Light Standard 15-Foot Pole)

Manufacturer:	KIM LIGHTING
Fixture:	ERA RA17A2
LED Wattage:	36L-350
Optics:	4W
CCT/CRI	3K7
Lens:	CLR
Pole:	HSAS16-534188 (Modified to 15' tall)
Mounting Arm:	HA11S
Finish:	BLS (Black Gloss Smooth)

NOTES:

1. REFER TO LIGHTING DETAILS AND SPECIFICATIONS FOR ADDITIONAL LIGHT FIXTURE, POLE AND MOUNTING ARM INFORMATION.
2. PRIOR TO ORDERING, CONTRACTOR IS RESPONSIBLE TO VERIFY ALL LIGHT FIXTURE AND POLE QUANTITIES FOUND IN THE LIGHTING PLANS. IF ANY DISCREPANCIES ARE FOUND, OWNER OR OWNER'S REPRESENTATIVE SHOULD BE NOTIFIED IMMEDIATELY.
3. CONTRACTOR SHALL PROVIDE SHOP DRAWINGS FOR REVIEW AND APPROVAL OF THE COMPLETE ASSEMBLY OF THE LIGHT POLE, LIGHT FIXTURE AND ACCESSORIES.
4. REFER TO PROPOSED LIGHTING AND UTILITY LAYOUT DRAWINGS FOR POWER SUPPLY LOCATIONS.

STATE OF MAINE
DEPARTMENT OF TRANSPORTATION
CAPITAL PROJECTS

WIN 024395.01

HIGHWAY PLANS

vhb

PROJ. MANAGER	E. MARTIN	BY	DATE
DESIGN-DETAILED	MJW	MKW	7/29/2026
CHECKED-REVIEWED	ECF	AG	
DESIGN2-DETAILED2			
DESIGN3-DETAILED3			
REVISIONS 1			
REVISIONS 2			
REVISIONS 3			
REVISIONS 4			
FIELD CHANGES			

SANFORD DOWNTOWN IMPROVEMENTS

LIGHTING PLANS

SHEET NUMBER

181

OF 195

Filename: 55303.02-LI.dwg Division: HIGHWAY Username: mwelsh Date: 05/15/2026

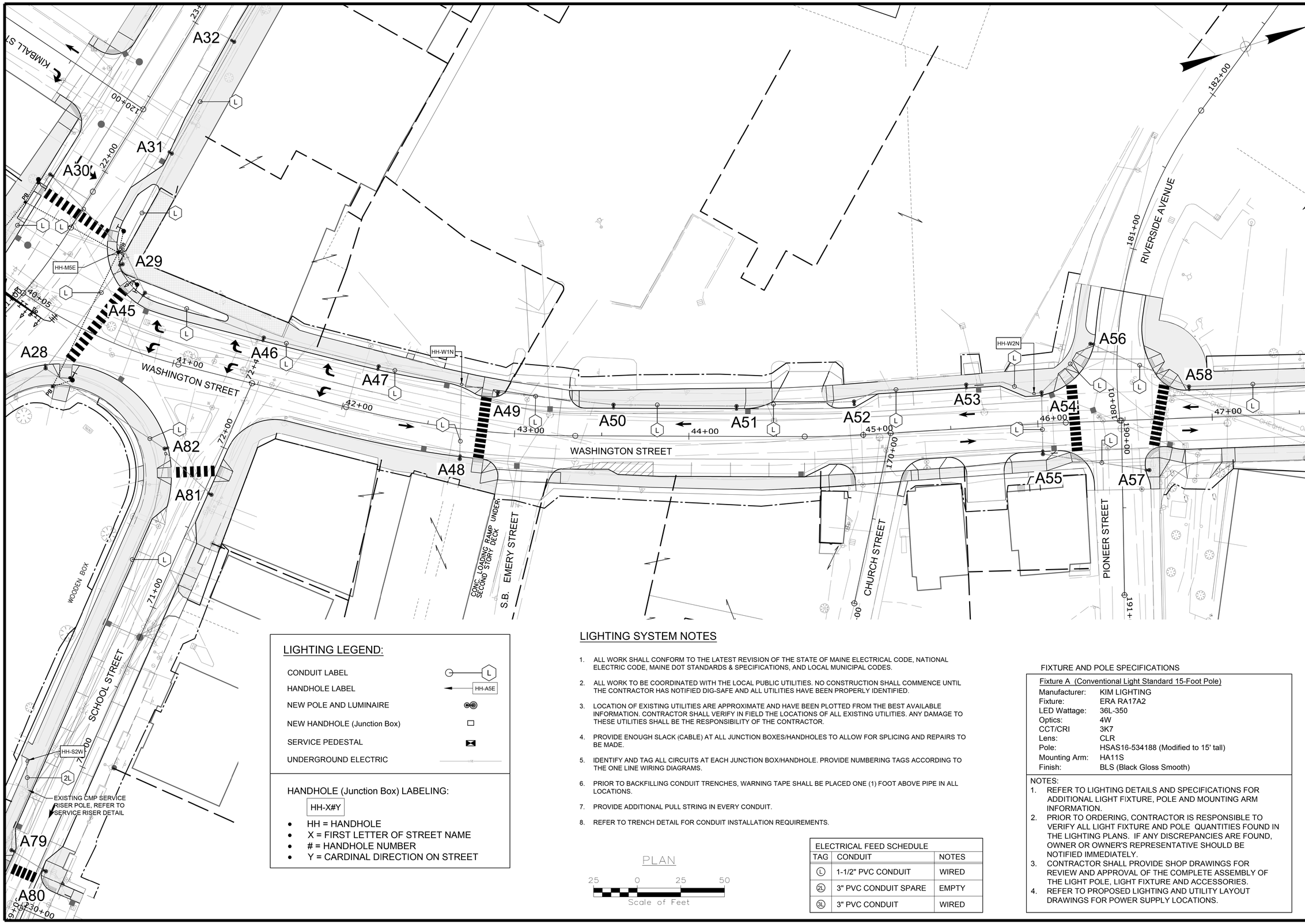

LIGHTING LEGEND:

- CONDUIT LABEL
- HANDHOLE LABEL
- NEW POLE AND LUMINAIRE
- NEW HANDHOLE (Junction Box)
- SERVICE PEDESTAL
- UNDERGROUND ELECTRIC

HANDHOLE (Junction Box) LABELING:

HH-X#Y

- HH = HANDHOLE
- X = FIRST LETTER OF STREET NAME
- # = HANDHOLE NUMBER
- Y = CARDINAL DIRECTION ON STREET

LIGHTING SYSTEM NOTES

1. ALL WORK SHALL CONFORM TO THE LATEST REVISION OF THE STATE OF MAINE ELECTRICAL CODE, NATIONAL ELECTRIC CODE, MAINE DOT STANDARDS & SPECIFICATIONS, AND LOCAL MUNICIPAL CODES.
2. ALL WORK TO BE COORDINATED WITH THE LOCAL PUBLIC UTILITIES. NO CONSTRUCTION SHALL COMMENCE UNTIL THE CONTRACTOR HAS NOTIFIED DIG-SAFE AND ALL UTILITIES HAVE BEEN PROPERLY IDENTIFIED.
3. LOCATION OF EXISTING UTILITIES ARE APPROXIMATE AND HAVE BEEN PLOTTED FROM THE BEST AVAILABLE INFORMATION. CONTRACTOR SHALL VERIFY IN FIELD THE LOCATIONS OF ALL EXISTING UTILITIES. ANY DAMAGE TO THESE UTILITIES SHALL BE THE RESPONSIBILITY OF THE CONTRACTOR.
4. PROVIDE ENOUGH SLACK (CABLE) AT ALL JUNCTION BOXES/HANDHOLES TO ALLOW FOR SPLICING AND REPAIRS TO BE MADE.
5. IDENTIFY AND TAG ALL CIRCUITS AT EACH JUNCTION BOX/HANDHOLE. PROVIDE NUMBERING TAGS ACCORDING TO THE ONE LINE WIRING DIAGRAMS.
6. PRIOR TO BACKFILLING CONDUIT TRENCHES, WARNING TAPE SHALL BE PLACED ONE (1) FOOT ABOVE PIPE IN ALL LOCATIONS.
7. PROVIDE ADDITIONAL PULL STRING IN EVERY CONDUIT.
8. REFER TO TRENCH DETAIL FOR CONDUIT INSTALLATION REQUIREMENTS.

PLAN

25 0 25 50

Scale of Feet

ELECTRICAL FEED SCHEDULE

TAG	CONDUIT	NOTES
L	1-1/2" PVC CONDUIT	WIRED
2L	3" PVC CONDUIT SPARE	EMPTY
3L	3" PVC CONDUIT	WIRED

FIXTURE AND POLE SPECIFICATIONS

Fixture A (Conventional Light Standard 15-Foot Pole)

Manufacturer:	KIM LIGHTING
Fixture:	ERA RA17A2
LED Wattage:	36L-350
Optics:	4W
CCT/CRI	3K7
Lens:	CLR
Pole:	HSAS16-534188 (Modified to 15' tall)
Mounting Arm:	HA11S
Finish:	BLS (Black Gloss Smooth)

NOTES:

1. REFER TO LIGHTING DETAILS AND SPECIFICATIONS FOR ADDITIONAL LIGHT FIXTURE, POLE AND MOUNTING ARM INFORMATION.
2. PRIOR TO ORDERING, CONTRACTOR IS RESPONSIBLE TO VERIFY ALL LIGHT FIXTURE AND POLE QUANTITIES FOUND IN THE LIGHTING PLANS. IF ANY DISCREPANCIES ARE FOUND, OWNER OR OWNER'S REPRESENTATIVE SHOULD BE NOTIFIED IMMEDIATELY.
3. CONTRACTOR SHALL PROVIDE SHOP DRAWINGS FOR REVIEW AND APPROVAL OF THE COMPLETE ASSEMBLY OF THE LIGHT POLE, LIGHT FIXTURE AND ACCESSORIES.
4. REFER TO PROPOSED LIGHTING AND UTILITY LAYOUT DRAWINGS FOR POWER SUPPLY LOCATIONS.

STATE OF MAINE
DEPARTMENT OF TRANSPORTATION

CAPITAL PROJECTS

WIN 024395.01

HIGHWAY PLANS

vhb

PROJ. MANAGER	E. MARTIN	BY	DATE
DESIGN-DETAILED	MJW	MKW	7/29/2026
CHECKED-REVIEWED	EGF	AG	
DESIGN2-DETAILED2			
DESIGN3-DETAILED3			
REVISIONS 1			
REVISIONS 2			
REVISIONS 3			
REVISIONS 4			
FIELD CHANGES			

SANFORD DOWNTOWN IMPROVEMENTS

LIGHTING PLANS

SHEET NUMBER

182

OF 195

Filename: 55303.02-LI.dwg Division: HIGHWAY Username: mwelsh Date: 05/15/2026

LIGHTING LEGEND:

CONDUIT LABEL	L
HANDHOLE LABEL	HH-A5E
NEW POLE AND LUMINAIRE	
NEW HANDHOLE (Junction Box)	
SERVICE PEDESTAL	
UNDERGROUND ELECTRIC	

HANDHOLE (Junction Box) LABELING:

HH-X#Y

- HH = HANDHOLE
- X = FIRST LETTER OF STREET NAME
- # = HANDHOLE NUMBER
- Y = CARDINAL DIRECTION ON STREET

LIGHTING SYSTEM NOTES

1. ALL WORK SHALL CONFORM TO THE LATEST REVISION OF THE STATE OF MAINE ELECTRICAL CODE, NATIONAL ELECTRIC CODE, MAINE DOT STANDARDS & SPECIFICATIONS, AND LOCAL MUNICIPAL CODES.
2. ALL WORK TO BE COORDINATED WITH THE LOCAL PUBLIC UTILITIES. NO CONSTRUCTION SHALL COMMENCE UNTIL THE CONTRACTOR HAS NOTIFIED DIG-SAFE AND ALL UTILITIES HAVE BEEN PROPERLY IDENTIFIED.
3. LOCATION OF EXISTING UTILITIES ARE APPROXIMATE AND HAVE BEEN PLOTTED FROM THE BEST AVAILABLE INFORMATION. CONTRACTOR SHALL VERIFY IN FIELD THE LOCATIONS OF ALL EXISTING UTILITIES. ANY DAMAGE TO THESE UTILITIES SHALL BE THE RESPONSIBILITY OF THE CONTRACTOR.
4. PROVIDE ENOUGH SLACK (CABLE) AT ALL JUNCTION BOXES/HANDHOLES TO ALLOW FOR SPLICING AND REPAIRS TO BE MADE.
5. IDENTIFY AND TAG ALL CIRCUITS AT EACH JUNCTION BOX/HANDHOLE. PROVIDE NUMBERING TAGS ACCORDING TO THE ONE LINE WIRING DIAGRAMS.
6. PRIOR TO BACKFILLING CONDUIT TRENCHES, WARNING TAPE SHALL BE PLACED ONE (1) FOOT ABOVE PIPE IN ALL LOCATIONS.
7. PROVIDE ADDITIONAL PULL STRING IN EVERY CONDUIT.
8. REFER TO TRENCH DETAIL FOR CONDUIT INSTALLATION REQUIREMENTS.

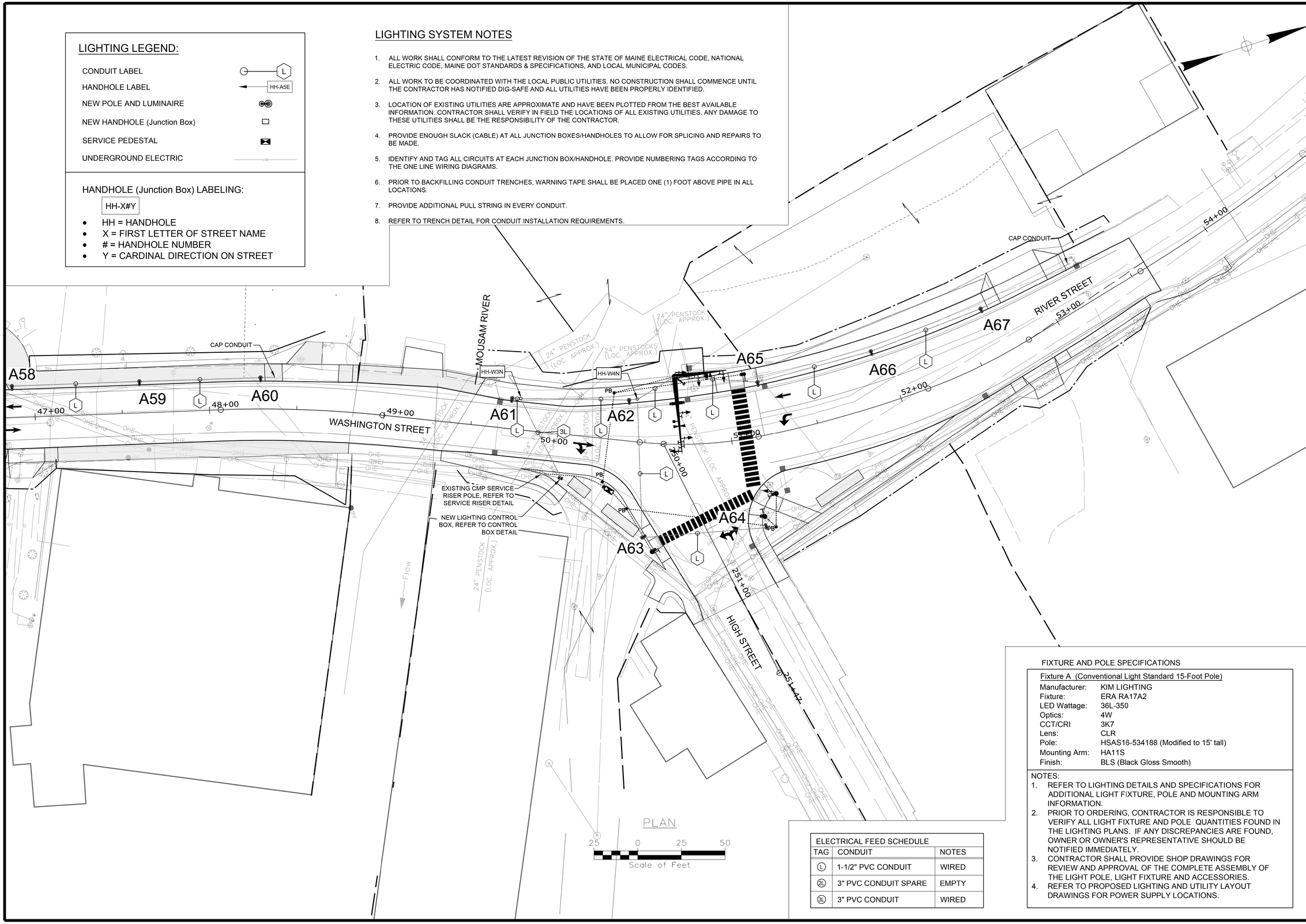

ELECTRICAL FEED SCHEDULE		
TAG	CONDUIT	NOTES
L	1-1/2" PVC CONDUIT	WIRED
2L	3" PVC CONDUIT SPARE	EMPTY
3L	3" PVC CONDUIT	WIRED

FIXTURE AND POLE SPECIFICATIONS

Fixture A (Conventional Light Standard 15-Foot Pole)

Manufacturer:	KIM LIGHTING
Fixture:	ERA RA17A2
LED Wattage:	36L-350
Optics:	4W
CCT/CRI	3K7
Lens:	CLR
Pole:	HSAS16-534188 (Modified to 15' tall)
Mounting Arm:	HA11S
Finish:	BLS (Black Gloss Smooth)

NOTES:

1. REFER TO LIGHTING DETAILS AND SPECIFICATIONS FOR ADDITIONAL LIGHT FIXTURE, POLE AND MOUNTING ARM INFORMATION.
2. PRIOR TO ORDERING, CONTRACTOR IS RESPONSIBLE TO VERIFY ALL LIGHT FIXTURE AND POLE QUANTITIES FOUND IN THE LIGHTING PLANS. IF ANY DISCREPANCIES ARE FOUND, OWNER OR OWNER'S REPRESENTATIVE SHOULD BE NOTIFIED IMMEDIATELY.
3. CONTRACTOR SHALL PROVIDE SHOP DRAWINGS FOR REVIEW AND APPROVAL OF THE COMPLETE ASSEMBLY OF THE LIGHT POLE, LIGHT FIXTURE AND ACCESSORIES.
4. REFER TO PROPOSED LIGHTING AND UTILITY LAYOUT DRAWINGS FOR POWER SUPPLY LOCATIONS.

STATE OF MAINE
DEPARTMENT OF TRANSPORTATION
CAPITAL PROJECTS

WIN 024395.01

HIGHWAY PLANS

vhb

		BY	DATE
PROJ. MANAGER	E. MARTIN		
DESIGN-DETAILED	MJW	MKW	7/29/2026
CHECKED-REVIEWED	EOF	AG	
DESIGN2-DETAILED2			
DESIGN3-DETAILED3			
REVISIONS 1			
REVISIONS 2			
REVISIONS 3			
REVISIONS 4			
FIELD CHANGES			

SANFORD DOWNTOWN IMPROVEMENTS

LIGHTING PLANS

SHEET NUMBER

183

OF 195

Filename: 55303.02-LI.dwg Division: HIGHWAY Username: mwelsh Date: 05/15/2026

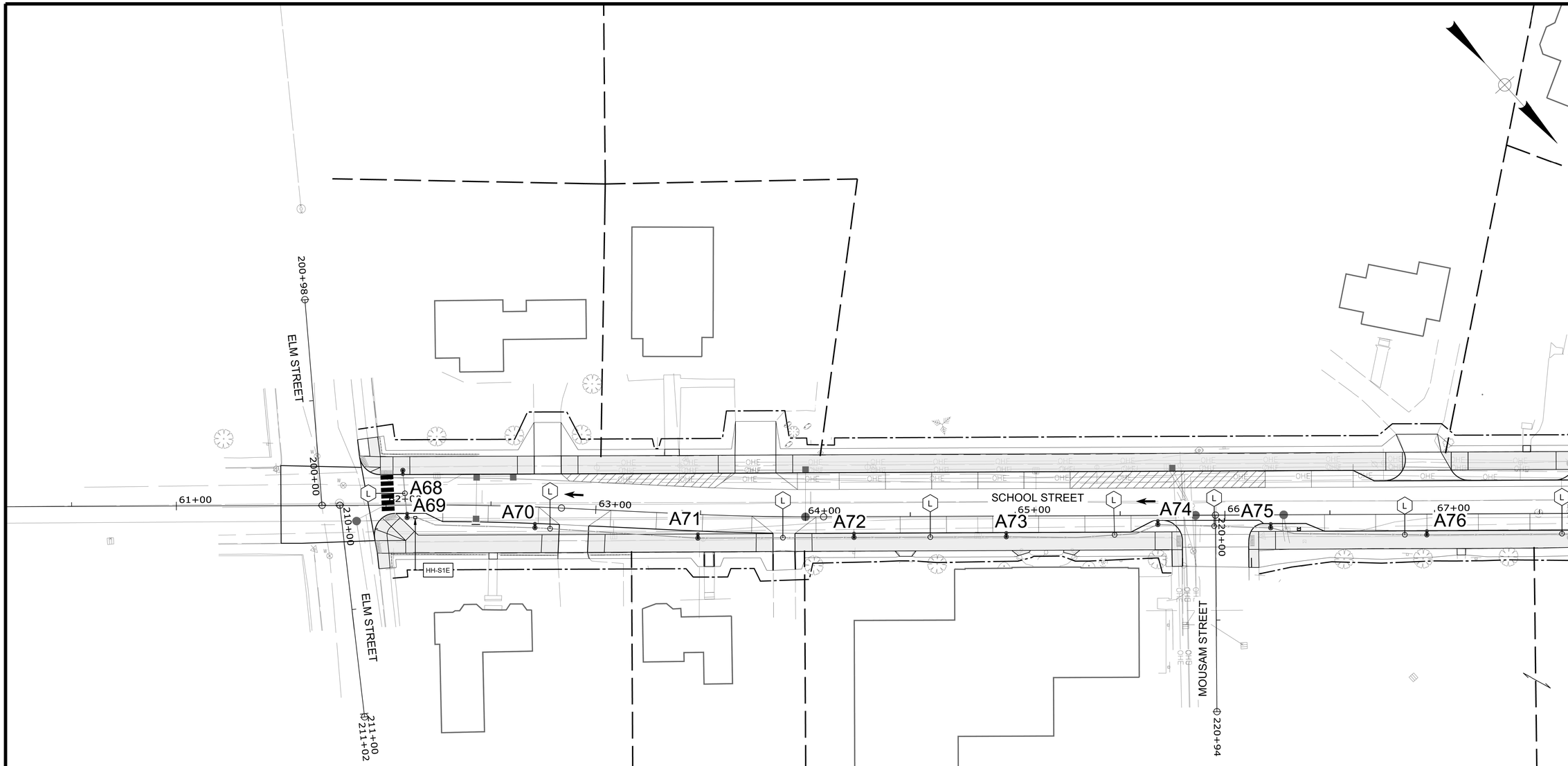

LIGHTING LEGEND:

- CONDUIT LABEL
- HANDHOLE LABEL (HH-A5E)
- NEW POLE AND LUMINAIRE
- NEW HANDHOLE (Junction Box)
- SERVICE PEDESTAL
- UNDERGROUND ELECTRIC

HANDHOLE (Junction Box) LABELING:

HH-X#Y

- HH = HANDHOLE
- X = FIRST LETTER OF STREET NAME
- # = HANDHOLE NUMBER
- Y = CARDINAL DIRECTION ON STREET

LIGHTING SYSTEM NOTES

1. ALL WORK SHALL CONFORM TO THE LATEST REVISION OF THE STATE OF MAINE ELECTRICAL CODE, NATIONAL ELECTRIC CODE, MAINE DOT STANDARDS & SPECIFICATIONS, AND LOCAL MUNICIPAL CODES.
2. ALL WORK TO BE COORDINATED WITH THE LOCAL PUBLIC UTILITIES. NO CONSTRUCTION SHALL COMMENCE UNTIL THE CONTRACTOR HAS NOTIFIED DIG-SAFE AND ALL UTILITIES HAVE BEEN PROPERLY IDENTIFIED.
3. LOCATION OF EXISTING UTILITIES ARE APPROXIMATE AND HAVE BEEN PLOTTED FROM THE BEST AVAILABLE INFORMATION. CONTRACTOR SHALL VERIFY IN FIELD THE LOCATIONS OF ALL EXISTING UTILITIES. ANY DAMAGE TO THESE UTILITIES SHALL BE THE RESPONSIBILITY OF THE CONTRACTOR.
4. PROVIDE ENOUGH SLACK (CABLE) AT ALL JUNCTION BOXES/HANDHOLES TO ALLOW FOR SPLICING AND REPAIRS TO BE MADE.
5. IDENTIFY AND TAG ALL CIRCUITS AT EACH JUNCTION BOX/HANDHOLE. PROVIDE NUMBERING TAGS ACCORDING TO THE ONE LINE WIRING DIAGRAMS.
6. PRIOR TO BACKFILLING CONDUIT TRENCHES, WARNING TAPE SHALL BE PLACED ONE (1) FOOT ABOVE PIPE IN ALL LOCATIONS.
7. PROVIDE ADDITIONAL PULL STRING IN EVERY CONDUIT.
8. REFER TO TRENCH DETAIL FOR CONDUIT INSTALLATION REQUIREMENTS.

PLAN

25 0 25 50

Scale of Feet

ELECTRICAL FEED SCHEDULE

TAG	CONDUIT	NOTES
L	1-1/2" PVC CONDUIT	WIRED
2L	3" PVC CONDUIT SPARE	EMPTY
3L	3" PVC CONDUIT	WIRED

FIXTURE AND POLE SPECIFICATIONS

Fixture A (Conventional Light Standard 15-Foot Pole)

Manufacturer:	KIM LIGHTING
Fixture:	ERA RA17A2
LED Wattage:	36L-350
Optics:	4W
CCT/CRI	3K7
Lens:	CLR
Pole:	HSAS16-534188 (Modified to 15' tall)
Mounting Arm:	HA11S
Finish:	BLS (Black Gloss Smooth)

NOTES:

1. REFER TO LIGHTING DETAILS AND SPECIFICATIONS FOR ADDITIONAL LIGHT FIXTURE, POLE AND MOUNTING ARM INFORMATION.
2. PRIOR TO ORDERING, CONTRACTOR IS RESPONSIBLE TO VERIFY ALL LIGHT FIXTURE AND POLE QUANTITIES FOUND IN THE LIGHTING PLANS. IF ANY DISCREPANCIES ARE FOUND, OWNER OR OWNER'S REPRESENTATIVE SHOULD BE NOTIFIED IMMEDIATELY.
3. CONTRACTOR SHALL PROVIDE SHOP DRAWINGS FOR REVIEW AND APPROVAL OF THE COMPLETE ASSEMBLY OF THE LIGHT POLE, LIGHT FIXTURE AND ACCESSORIES.
4. REFER TO PROPOSED LIGHTING AND UTILITY LAYOUT DRAWINGS FOR POWER SUPPLY LOCATIONS.

STATE OF MAINE
DEPARTMENT OF TRANSPORTATION

CAPITAL PROJECTS

WIN 024395.01

HIGHWAY PLANS

vhb

	BY	DATE
PROJ. MANAGER	E. MARTIN	
DESIGN-DETAILED	MJW	MKW
CHECKED-REVIEWED	EOF	AG
DESIGN2-DETAILED2		
DESIGN3-DETAILED3		
REVISIONS 1		
REVISIONS 2		
REVISIONS 3		
REVISIONS 4		
FIELD CHANGES		

SANFORD DOWNTOWN IMPROVEMENTS

LIGHTING PLANS

SHEET NUMBER

184

OF 195

Division: HIGHWAY

Username: mwelsh

Date: 05/15/2026

Filename: 55303.02-LI.dwg

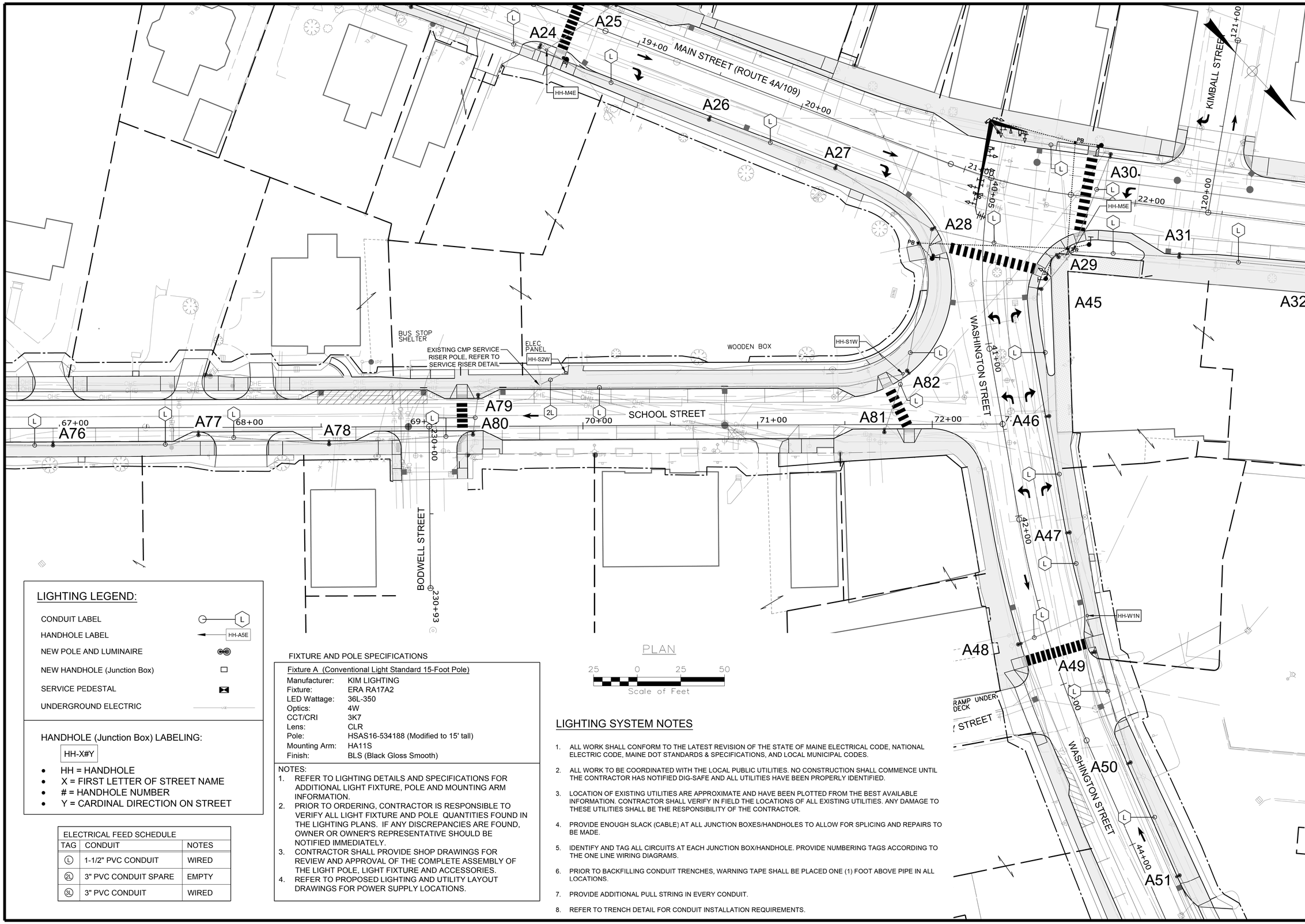

LIGHTING LEGEND:

- CONDUIT LABEL — L
- HANDHOLE LABEL — HH-A5E
- NEW POLE AND LUMINAIRE
- NEW HANDHOLE (Junction Box)
- SERVICE PEDESTAL
- UNDERGROUND ELECTRIC

HANDHOLE (Junction Box) LABELING:

HH-X#Y

- HH = HANDHOLE
- X = FIRST LETTER OF STREET NAME
- # = HANDHOLE NUMBER
- Y = CARDINAL DIRECTION ON STREET

ELECTRICAL FEED SCHEDULE

TAG	CONDUIT	NOTES
L	1-1/2" PVC CONDUIT	WIRED
2L	3" PVC CONDUIT SPARE	EMPTY
3L	3" PVC CONDUIT	WIRED

FIXTURE AND POLE SPECIFICATIONS

Fixture A (Conventional Light Standard 15-Foot Pole)

Manufacturer:	KIM LIGHTING
Fixture:	ERA RA17A2
LED Wattage:	36L-350
Optics:	4W
CCT/CRI	3K7
Lens:	CLR
Pole:	HSAS16-534188 (Modified to 15' tall)
Mounting Arm:	HA11S
Finish:	BLS (Black Gloss Smooth)

NOTES:

1. REFER TO LIGHTING DETAILS AND SPECIFICATIONS FOR ADDITIONAL LIGHT FIXTURE, POLE AND MOUNTING ARM INFORMATION.
2. PRIOR TO ORDERING, CONTRACTOR IS RESPONSIBLE TO VERIFY ALL LIGHT FIXTURE AND POLE QUANTITIES FOUND IN THE LIGHTING PLANS. IF ANY DISCREPANCIES ARE FOUND, OWNER OR OWNER'S REPRESENTATIVE SHOULD BE NOTIFIED IMMEDIATELY.
3. CONTRACTOR SHALL PROVIDE SHOP DRAWINGS FOR REVIEW AND APPROVAL OF THE COMPLETE ASSEMBLY OF THE LIGHT POLE, LIGHT FIXTURE AND ACCESSORIES.
4. REFER TO PROPOSED LIGHTING AND UTILITY LAYOUT DRAWINGS FOR POWER SUPPLY LOCATIONS.

LIGHTING SYSTEM NOTES

1. ALL WORK SHALL CONFORM TO THE LATEST REVISION OF THE STATE OF MAINE ELECTRICAL CODE, NATIONAL ELECTRIC CODE, MAINE DOT STANDARDS & SPECIFICATIONS, AND LOCAL MUNICIPAL CODES.
2. ALL WORK TO BE COORDINATED WITH THE LOCAL PUBLIC UTILITIES. NO CONSTRUCTION SHALL COMMENCE UNTIL THE CONTRACTOR HAS NOTIFIED DIG-SAFE AND ALL UTILITIES HAVE BEEN PROPERLY IDENTIFIED.
3. LOCATION OF EXISTING UTILITIES ARE APPROXIMATE AND HAVE BEEN PLOTTED FROM THE BEST AVAILABLE INFORMATION. CONTRACTOR SHALL VERIFY IN FIELD THE LOCATIONS OF ALL EXISTING UTILITIES. ANY DAMAGE TO THESE UTILITIES SHALL BE THE RESPONSIBILITY OF THE CONTRACTOR.
4. PROVIDE ENOUGH SLACK (CABLE) AT ALL JUNCTION BOXES/HANDHOLES TO ALLOW FOR SPLICING AND REPAIRS TO BE MADE.
5. IDENTIFY AND TAG ALL CIRCUITS AT EACH JUNCTION BOX/HANDHOLE. PROVIDE NUMBERING TAGS ACCORDING TO THE ONE LINE WIRING DIAGRAMS.
6. PRIOR TO BACKFILLING CONDUIT TRENCHES, WARNING TAPE SHALL BE PLACED ONE (1) FOOT ABOVE PIPE IN ALL LOCATIONS.
7. PROVIDE ADDITIONAL PULL STRING IN EVERY CONDUIT.
8. REFER TO TRENCH DETAIL FOR CONDUIT INSTALLATION REQUIREMENTS.

STATE OF MAINE
DEPARTMENT OF TRANSPORTATION
CAPITAL PROJECTS
WIN 024395.01
HIGHWAY PLANS

vhb

PROJ. MANAGER	E. MARTIN	BY	DATE
DESIGN-DETAILED	MJW	MKW	7/29/2026
CHECKED-REVIEWED	EGF	AG	
DESIGN2-DETAILED2			
DESIGN3-DETAILED3			
REVISIONS 1			
REVISIONS 2			
REVISIONS 3			
REVISIONS 4			
FIELD CHANGES			

SANFORD DOWNTOWN IMPROVEMENTS

LIGHTING PLANS

SHEET NUMBER

185

OF 195

Filename: 55303.02-LI.dwg Division: HIGHWAY Username: mwelsh Date: 05/15/2026

LIGHTING DETAIL AND SPECIFICATION NOTES

1. REFER TO THE MAINE DOT STANDARD DETAILS AND SPECIFICATIONS FOR ADDITIONAL INFORMATION; March 2020.
2. LIGHT POLES FOUNDATIONS: REFER TO MAINE DOT DETAIL 626(02) March 2020
3. JUNCTION BOX/HAND HOLE: REFER TO MAINE DOT DETAIL 626(02) March 2020
4. LIGHTING SERVICE POLE: REFER TO MAINE DOT DETAIL 634(01) March 2020 (If applicable)

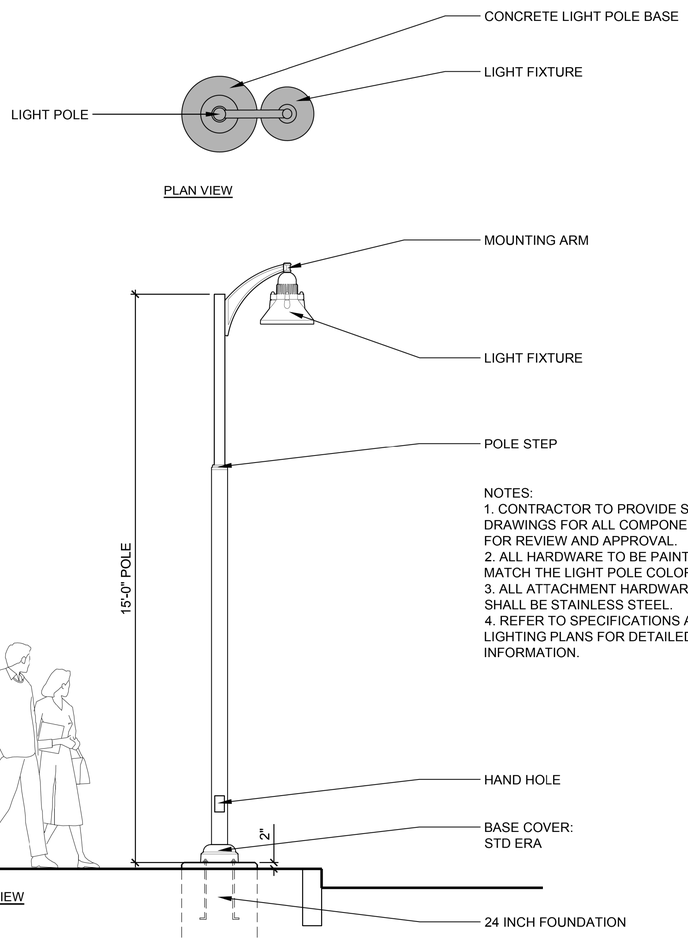

NOTES:
1. CONTRACTOR TO PROVIDE SHOP DRAWINGS FOR ALL COMPONENTS FOR REVIEW AND APPROVAL.
2. ALL HARDWARE TO BE PAINTED TO MATCH THE LIGHT POLE COLOR.
3. ALL ATTACHMENT HARDWARE SHALL BE STAINLESS STEEL.
4. REFER TO SPECIFICATIONS AND LIGHTING PLANS FOR DETAILED INFORMATION.

A FIXTURE A - (Conventional Light Standard 15-Foot Pole)
SCALE 1/2" = 1'-0"

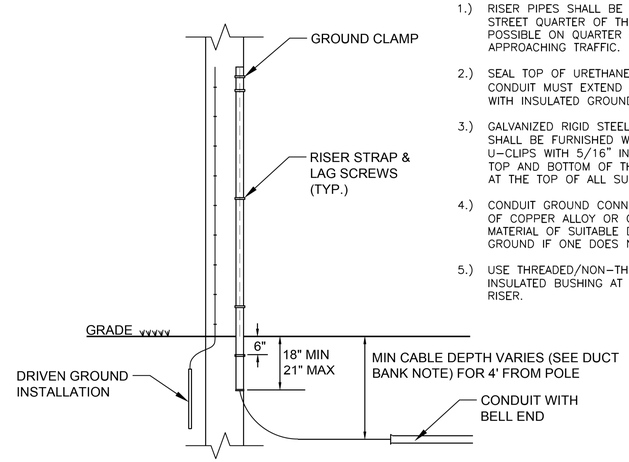

B CMP SECONDARY SERVICE RISER
SCALE: NTS

GRS CONDUIT RISER NOTES:

1.) RISER PIPES SHALL BE LOCATED ON THE STREET QUARTER OF THE POLE, AND, WHEN POSSIBLE ON QUARTER AWAY FROM APPROACHING TRAFFIC.

2.) SEAL TOP OF URETHANE SEALER. TOP OF CONDUIT MUST EXTEND 4" ABOVE NEUTRAL, WITH INSULATED GROUNDING BUSHING.

3.) GALVANIZED RIGID STEEL RISER CONDUIT SHALL BE FURNISHED WITH TWO-HOLE U-CLIPS WITH 5/16" INCH HOLES AT THE TOP AND BOTTOM OF THE FIRST SECTION, AND AT THE TOP OF ALL SUBSEQUENT SECTIONS.

4.) CONDUIT GROUND CONNECTOR SHALL BE MADE OF COPPER ALLOY OR GALVANIZED STEEL MATERIAL OF SUITABLE DESIGN. FURNISH POLE GROUND IF ONE DOES NOT EXIST.

5.) USE THREADED/NON-THREADED COUPLING OR INSULATED BUSHING AT THE BOTTOM OF RISER.

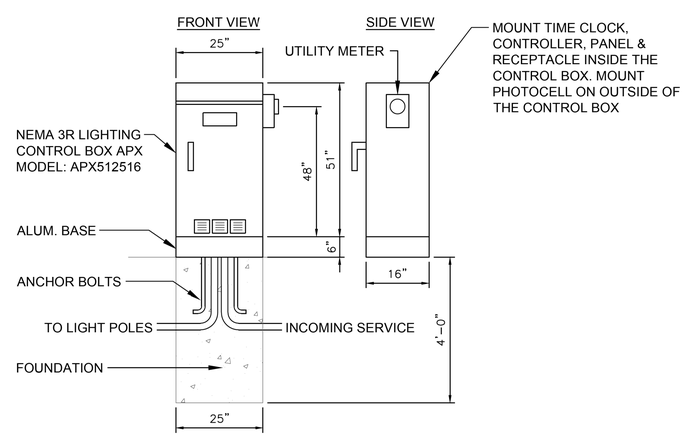

C LIGHTING CONTROL BOX DETAIL
SCALE: NTS

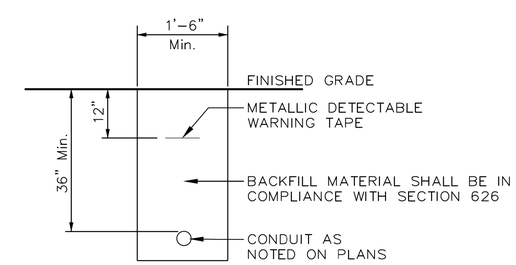

D TRENCH CROSS SECTION
SCALE: NTS

STATE OF MAINE
DEPARTMENT OF TRANSPORTATION
CAPITAL PROJECTS
WIN 024395.01
HIGHWAY PLANS

vhb

PROJ. MANAGER	E. MARTIN	BY	DATE
DESIGN-DETAILED	MJW	MKW	7/29/2026
CHECKED-REVIEWED	EGF	AG	
DESIGN2-DETAILED2			
DESIGN3-DETAILED3			
REVISIONS 1			
REVISIONS 2			
REVISIONS 3			
REVISIONS 4			
FIELD CHANGES			

SANFORD
DOWNTOWN IMPROVEMENTS

LIGHTING PLANS

SHEET NUMBER
186
OF 195

Filename: 55303.02-LIDT.dwg Division: HIGHWAY Username: mwelsh Date: 05/15/2026

KIM LIGHTING®

DATE: LOCATION:
TYPE: PROJECT:
CATALOG #:

RA17A2

ARCHITECTURAL AREA/SITE

Era®

Fixture A

FEATURES

- TIR Optics
- Available in Amber, 3000K, 4000K and 5000K standard CCT
- Type 1, 2, 3, 4W, 5Q, 5W distributions
- 0 - 10V dimming drivers standard

See Certification Specifications

3000K and warmer CCTs only

RELATED PRODUCTS

Ouro Pavilion PGL8

SPECIFICATIONS

CONSTRUCTION

- One piece die-cast housing, low copper (<0.6% Cu) Aluminum Alloy with integral cooling ribs over the optical chamber and electrical compartment
- Solid barrier wall separates optical and electrical compartments
- Double-thick wall with gussets on the support-arm mounting end
- Housing forms a half cylinder with 55° front face plane providing a recess to allow a flush single-latch detail
- All hardware is stainless steel or electro-zinc plated steel
- Finish: fade and abrasion resistant, electrostatically applied, thermally cured, triglycidal isocyanurate (TGIC) polyester powdercoat
- One-piece die-cast, low copper (<0.6% Cu) aluminum alloy lens frame with 1" minimum depth around the gasket flange
- Optional clear 1/8" thick tempered glass lens retained by eight steel clips with full silicone gasketing around the perimeter
- Optional, fixture supplied with a one-piece flat, clear, UV stabilized polycarbonate, fully gasketed. CAUTION: Use only when vandalism is anticipated to be high. Useful life is limited by UV discoloration from sunlight. A program of regular inspection and periodic replacement is highly recommended to maintain optimum fixture performance
- One-piece extruded aluminum arm with internal bolt guides and fully radiused top and bottom
- Luminaire-to-pole attachment is by internal draw bolts, and includes a pole reinforcing plate with wire strain relief

CONSTRUCTION (CONTINUED)

- Arm is circular cut for specified round pole
- Optional cast, low copper aluminum horizontal slip-fitter with adaptor plate to secure the luminaire to 2" IPS pipe size arms
- Optional cast aluminum wall mount plate assembly. Attaches to the wall over the junction box. Luminaire attaches to the wall plate

OPTICS

- Optical cartridge system consisting of a die cast heat sink, LED engine, TIR optics, gasket and bezel plate
- Cartridge is easily disassembled to replace components. Optics are hed in place without the use of adhesives
- Molded silicone gasket ensures a weather-proof seal around each individual LED
- Features revolutionary individual LED optical control based on high performance TIR optical designs
- Optional BackLight Control for complete control of unwanted backlight
- IP66 Optical assembly
- Type 1, 2, 3, 4W, 5Q, and 5W standard distributions Custom available
- 3000K, 4000K, 5000K standard CCT. Amber and custom available
- Die-cast, low copper aluminum heat sink modules provide thermal transfer at PCB level
- Anodized aluminum heat sink modules

INSTALLATION

- Fixtures must be grounded in accordance with national, state and/or local electrical codes. Failure to do so may result in serious personal injury

ELECTRICAL

- Dimming range from 10% to 100% through the use of standard 0-10V interface on the programmable driver
- Modular wiring harness in the service area provides user access to the dimming circuitry
- Optional factory programmed dimming profile
- Surge protection: 10kV surge suppression
- SF for 120, 277, 347 Line volts
  DF for 208, 240, 480 Line volts
- Wiring: 14GA wires rated 150°C

CONTROLS

- Button Photocell

CERTIFICATIONS AND LISTINGS

- Listed to UL1598 and CSA C22.2#250.0-24 for wet locations
- RoHS compliant
- This product qualifies as a "designated country construction material" per FAR 52.225-11 Buy American-Construction Materials under Trade Agreements effective 6/06/2020. See Buy American Solutions
- IDA approved, 3000K and warmer CCTs only

WARRANTY

- 5 year warranty

KEY DATA	
Lumen Range	2,220–9,453
Wattage Range	42.2–73.3
Efficacy Range (LPW)	52.6–133.4
Reported Life (Hours)	L70/60,000
Weight	37 lbs 16.78 kg
EPA	0.8

© 2022 HLI Solutions, Inc. All rights reserved. Information and specifications subject to change without notice. All values are design or typical values when measured under laboratory conditions.

KIM LIGHTING®

Fixture A - Pole

HSAS

ERA® STEPPED ALUMINUM SMOOTH POLE

Type:
Job:
Catalog number:

/ / / / / /
Pole Cat. No. / Mounting / Arm Drilling Option / Pole Finish / Optional Base Cove / Optional Pole Top Cap/Finial / Optional Duplex Receptical

See page 2 — See page 3 — See page 4

Approvals:

Specifications

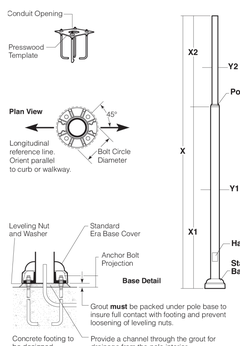

Pole Construction: Seamless round extruded aluminum tube of alloy 6061-T6, welded to top and bottom of aluminum base casting of alloy 356.

Base Cover: Two-piece, cast aluminum full cover, secured by stainless set screws. The standard base cover is the Era Base Cover. Two optional base cover styles available. (See page **4**)

1) **HBC1 -** Decorative smooth sided cast aluminum base cover.
2) **HBC2 -** Traditional fluted side cast aluminum base cover.

Pole Cap: Flat cast aluminum provided for all side-mounted luminaires. Optional traditional style finial available. (See page **4**)

1) **HF1 -** Dome style cast aluminum cap.
2) **HF2 -** Traditional style cast aluminum finial.

Handhole: 18" above the base cover, with a gasketed cover and ground lug.

Anchor Bolts: Four galvanized anchor bolts provided complete with eight nuts, eight flat washers, and a presswood template.

Vibration Dampener: All poles 25' and above include an internally mounted, factory installed pendulum vibration dampener, with flush stainless steel socket head fasteners finished to match pole.

Strength: Poles designed to withstand wind loads as listed in chart (See page **5**) when luminaires are mounted per fixture installation instructions. Refer to specific Era® Collection mounting arm for specific luminaire and arm EPA.

Finish: Super TGIC thermoset polyester powder coat paint applied over a titanated zirconium conversion coating.

CAUTION: Do not install poles without luminaires or strength guarantee is voided. Any unauthorized accessories secured to pole shall void strength guarantee.

Maintenance: A regularly scheduled maintenance program must be established to insure the protective paint coating is intact, corrosion or structural damage has not occurred, and anchor bolt nuts are tight. Failure to do so could lead to pole collapse and serious personal injury.

Certification: Certified UL 1598 in accordance with Article 410 of ANSI/NFPA 70, National Electrical Code.

© 2022 HLI Solutions, Inc. All rights reserved. Information and specifications subject to change without notice. All values are design or typical values when measured under laboratory conditions.

KIM LIGHTING®

Fixture A - Mounting Arm

HA11

SIDE POLE SWEPT CAST ARM

Type:
Job:
Ordering Example:

1A / AE17H3 / 150PMH277 / LG-P / **HA11S-TM1 / HAF2**
Mtg. Fixture / Elec Module / Finish / Options

Ordering Information

Always refer to the specific luminaire catalog, and the ordering information page within that catalog. Place the optional Heritage Arm catalog number as an "Option" following the Fixture catalog numbers.

Approvals:

Specifications

HA11L
Large Arm
for Kim RA25, AE21, BE21, and LET26 fixtures only.

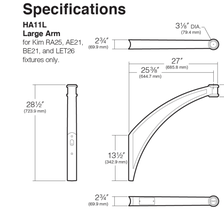

HA11S
Small Arm
for Kim RA17, AE17, BE17, NS, SRS, and LET19 fixtures.

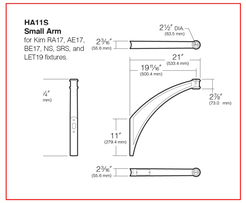

Arm: One-piece, cast aluminum side-mounted arm and cover. Fixture mounting arm is open for access to wiring connections and stainless steel mounting bolts, and enclosed by a flush mounted cast aluminum cover secured with stainless steel screws. Optional cast aluminum finial may be selected to close off fixture mounting hub (flat cap standard). Attachment to pole is by ⅞" stainless steel bolts. Stainless steel bolts thread into a pole backing plate located inside the pole. Pole backing plate is heavy gauge zinc plated steel, and includes a wire strain relief and grounding connection. For round poles, arm is circular cut for the specific pole diameter. Arm-to-luminaire attachment is by concealed stainless steel rods, projecting into the fixture where nuts and washers secure the mounting. Small arm utilizes ⅜" studs and large arm utilizes ½" studs.

Finish: Premium Super TGIC thermoset polyester powder coating, 2.5 mil nominal thickness, applied over a titanated zirconium conversion coating. Arm color is always provided to match the selected pole and luminaire color.

Optional Arm Finial: (See page **3**)
Optional Wall Mount: (See page **3**)
Optional Tenon Mount: (See page **3**)

NOTES:

1) Refer to page **75** of Arms and Poles Selection Guide for wind map and application information.
2) Refer to pages **78** and **79** of Arms and Poles Selection Guide for luminaire Optical Centerline Matrix.
3) A regularly scheduled maintenance program must be established to insure paint coating is intact, corrosion or structural damage has not occurred, and all mounting rods, nuts and bolts are tight. Failure to do so could lead to damage or serious personal injury.

© 2022 HLI Solutions, Inc. All rights reserved. Information and specifications subject to change without notice. All values are design or typical values when measured under laboratory conditions.

KIM LIGHTING®

DATE: LOCATION:
TYPE: PROJECT:
CATALOG #:

RA17A2

ARCHITECTURAL AREA/SITE

ORDERING GUIDE

Example: RA17A2-36L-600-3K7-3-UNV-BL-CLR-PC- HA01S

CATALOG #

HOUSING

Housing	Current	CCT/CRI	Distribution	Voltage	Fixture Finish	Lens
RA17A2 RA17 2.0	36L - 350 4,000lm	AM Amber-595nm Peak [1]	1 Type I	UNV 120-277V	BLS Black Gloss Smooth	Blank No Lens
	36L - 600 6,600lm	3K7 3000K, 70 CRI	2 Type II	347 347V	BLT Black Matte Textured	CLR Clear Lens
	36L - 645 7,500lm	4K7 4000K, 70 CRI	3 Type III	480 480V	DBS Dark Bronze Gloss Smooth	PL Polycarbonate Lens
		5K7 5000K, 70 CRI	4W Type IV Wide		DBT Dark Bronze Matte Textured	
			5Q Type V Square Medium		GTT Graphite Matte Textured	
			5W Type V Wide (Round)		LGS Light Grey Gloss Smooth	
					LGT Light Grey Matte Textured	
					PSS Platinum Silver Gloss Smooth	
					VGT Verde Green Matte Textured	
					WHS White Gloss Smooth	
					WHT White Matte Textured	
					Color Option	
					CC Custom Color	
					CLA[2] Clear Anodize	

Shielding	Fuse Option	Photocell	Pole Mounted Sensors	Arm Type
BC Back Light Control [3]	SF Single Fuse	PC Button Photocell [4]	SCH-R Round Pole Mounted Occupancy Sensor up to up to 30'	Pole Arm / Pole Tenon Mount / Wall Mount / Style
	DF Double Fuse		SCH-S Square Pole Mounted Occupancy Sensor up to up to 30'	HA03S [4] HA03S-TM1, HA03S-TM2, HA03S-TM3, HA03S-TM4 — HA11S-W Side Pole Swept Cast Arm
			Note: Pole mounted sensor - ordered separately. SCH specification Sheet	HA11S HA11S-TM1, HA11S-TM2, HA11S-TM3, HA11S-TM4 — HA12S-W Side Pole S-Shaped Up Cast Arm
				HA12S HA12S-TM1, HA12S-TM2, HA12S-TM3, HA12S-TM4 — HA14S-W Side Pole Neo-Classic Arm
				HA14S HA14S-TM1, HA14S-TM2, HA14S-TM3, HA14S-TM4
				Arm Finial: HAF02

Notes:
1 Wild life friendly
2 Recommended for harsh environment, salt spray 3,000 hours rated
3 Back Light Control not available for Type 5Q and Type 5W
4 HSAS Pole only
5 PC not available in 480V

© 2022 HLI Solutions, Inc. All rights reserved. Information and specifications subject to change without notice. All values are design or typical values when measured under laboratory conditions.

KIM LIGHTING®

HSAS

ERA® STEPPED ALUMINUM SMOOTH POLE

Standard Features

NOTE: All allowable pole and fixture EPAs (Effective Projected Area, which is Fixture Area x Drag Factor) are derived from the AASHTO standard (American Association of State Highway and Transportation Officials). Responsibility lies with the specifier for correct pole selection based on local codes and standards for the job location (See page **5**).

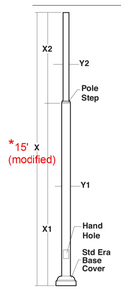

Pole — **Allowable Pole EPA** — Wind Map Steady Wind

Pole Catalog Number	X	X1	X2	Y1	Y2	85	90	100	110	120	130	140	150
HSAS10-534188	10'	6.5'	3.5'	5"x.188	3.375"	29.54	26.14	23.92	19.55	16.24	13.67	11.63	9.99
HSAS12-534188	12'	8'	4'	5"x.188	3.375"	23.91	21.09	19.23	15.63	12.91	10.80	9.13	7.79
HSAS14-534188	14'	9.3'	4.7'	5"x.188	3.375"	19.80	17.38	15.79	12.74	10.45	8.67	7.26	6.14
* HSAS16-534188	16'	10.5'	5.5'	5"x.188	3.375"	16.64	14.52	13.12	10.50	8.52	6.99	5.78	4.80
HSAS20-534188	19.5'	13'	6.4'	5"x.188	3.375"	11.73	10.09	9.02	7.06	5.60	4.47	3.58	2.87
HSAS14-64188	14'	9.3'	4.7'	6"x.188	4"	29.78	26.23	23.89	19.70	16.26	13.59	11.48	10.00
HSAS16-64188	16'	10.5'	5.5'	6"x.188	4"	25.24	22.12	20.08	16.54	13.56	11.25	9.42	8.29
HSAS20-64188	19.5'	13'	6.4'	6"x.188	4"	18.15	15.94	14.63	11.67	9.43	7.77	6.56	5.59
HSAS25-64188	25'	16.7'	8.3'	6"x.188	4"	11.85	10.21	9.34	7.19	5.56	4.40	3.62	3.00
HSAS25-64250	25'	16.7'	8.3'	6"x.250	4"	16.75	14.58	13.36	10.51	8.35	6.78	5.67	4.79
HSAS30-64250	30'	20'	10'	6"x.250	4"	11.63	9.96	9.10	6.90	5.25	4.08	3.31	2.71
HSAS30-64400'	30'	20'	10'	6"x.400	4"	17.73	15.37	14.03	10.82	8.56	6.87	5.70	4.79

*Pole reinforced, to 40" above base, to .400", remaining section is .250"

Anchor Base and Bolt Detail

Pole Height	Pole Diameter	Bolt Circle DIA	Anchor Bolt Projection	Anchor Bolts Size	Base Cover Size	Conduit Opening
10'-14'	5"	8 1/2"	3 1/4"	3/4" x 15" + 3"	11 7/8" DIA	3" DIA
16'-20'	5"	8 1/2"	3 1/4"	3/4" x 30" + 4"	11 7/8" DIA	3" DIA
14'	6"	10 1/2"	3 3/8"	3/4" x 15" + 3"	14" DIA	5" DIA
16'-30'	6"	10 1/2"	3 3/8"	3/4" x 30" + 4"	14" DIA	5" DIA

Mounting

Flush Mount — Side Arm

Plan Views:

Mounting: FM | A | SA | B | SB | L | SL | T | ST | Y | SY | C | SC

NOTE: Allowable Pole EPA for jobsite wind conditions must be equal to or greater than fixture mount EPA. Please refer to Kim luminaire catalog for specific fixture.

Available Arm Drilling

Please see pole drilling requirements in specific Kim luminaire catalog.

HA02S	HA02L	HA14S	HA14L	HA34S	HA34L	HA38S	HA38L
HA11S	HA11L	HA31S	HA31L	HA35S	HA35L	NO OPTION	
HA12S	HA12L	HA32S	HA32L	HA36S	HA36L		
HA13S	HA13L	HA33S	HA33L	HS37S	HA37L		

[1]**HA01S** mounts to pole top O.D. of 3 3/8" [1]**HA03S** mounts to pole top O.D. of 3 3/8"
[1]**HA01L** mounts to pole top O.D. of 4" [1]**HA03L** mounts to pole top O.D. of 4"
[2]Pole will be shipped with internal pole adaptor installed.

© 2022 HLI Solutions, Inc. All rights reserved. Information and specifications subject to change without notice. All values are design or typical values when measured under laboratory conditions.

Filename: 55303.02-LIDT.dwg Division: HIGHWAY Username: mwelsh Date: 05/15/2026

STATE OF MAINE
DEPARTMENT OF TRANSPORTATION
CAPITAL PROJECTS

WIN 024395.01

HIGHWAY PLANS

vhb

		BY	DATE
PROJ. MANAGER	E. MARTIN		
DESIGN-DETAILED	MJW	MKW	7/29/2026
CHECKED-REVIEWED	ECF	AG	
DESIGN2-DETAILED2			
DESIGN3-DETAILED3			
REVISIONS 1			
REVISIONS 2			
REVISIONS 3			
REVISIONS 4			
FIELD CHANGES			

SANFORD
DOWNTOWN IMPROVEMENTS

LIGHTING PLANS

SHEET NUMBER
187
OF 195

PLAN LEGEND

Town, County, State	New R/W Along Existing R/W	Sanitary Sewer (Existing / Proposed)	Traveled Way (Existing / Proposed)
Approx. Property Lines — P.L. —	Building / Clearing Limit Line	Telephone Line	Ditch
Existing Right of Way	Trees: Conifer / Deciduous	Electric Line	Catch Basin
Limits of Wrought Portion — L.O.W.P. —	Tree Line / Bush Line	Water Line	Manhole
Control Of Access — C.O.A. —	Water Edge	Underdrain Line	Sewer Manhole
New Right of Way	Ledge / Rock/Boulder / Flag Pole	Gas Line	Utility Pole
New Easement	Fence: CHAIN LINK / BARB WIRE / STOCKADE	Guardrail	Fire Hydrant
New Temporary Rights	Sign / Well / Mailbox	Culvert	Curbing
New R/W Within Existing R/W			

Cut Line	Fill Line	
Stonewall	Retaining Wall	
Baseline 10+00 11+00 12+00		
Monument	Traverse Point	
Iron Rod Found IRF	Pipe Found IPF	
Replacement Pin Set		

THIS PLAN WAS PREPARED IN CONNECTION WITH THE DEPARTMENT'S ACQUISITION OF REAL PROPERTY FOR TRANSPORTATION PURPOSES. IT CANNOT BE USED TO ESTABLISH LEGAL BOUNDARIES BETWEEN ABUTTING PROPERTY OWNERS.

25 0 25 50 75 100
Scale of Feet

STATE OF MAINE
REGISTRY OF DEEDS

COUNTY _____
RECEIVED _____, _____
at ____h____m____M and
recorded in Plan Bk ____, Pg. ____
Attest: _____
REGISTER

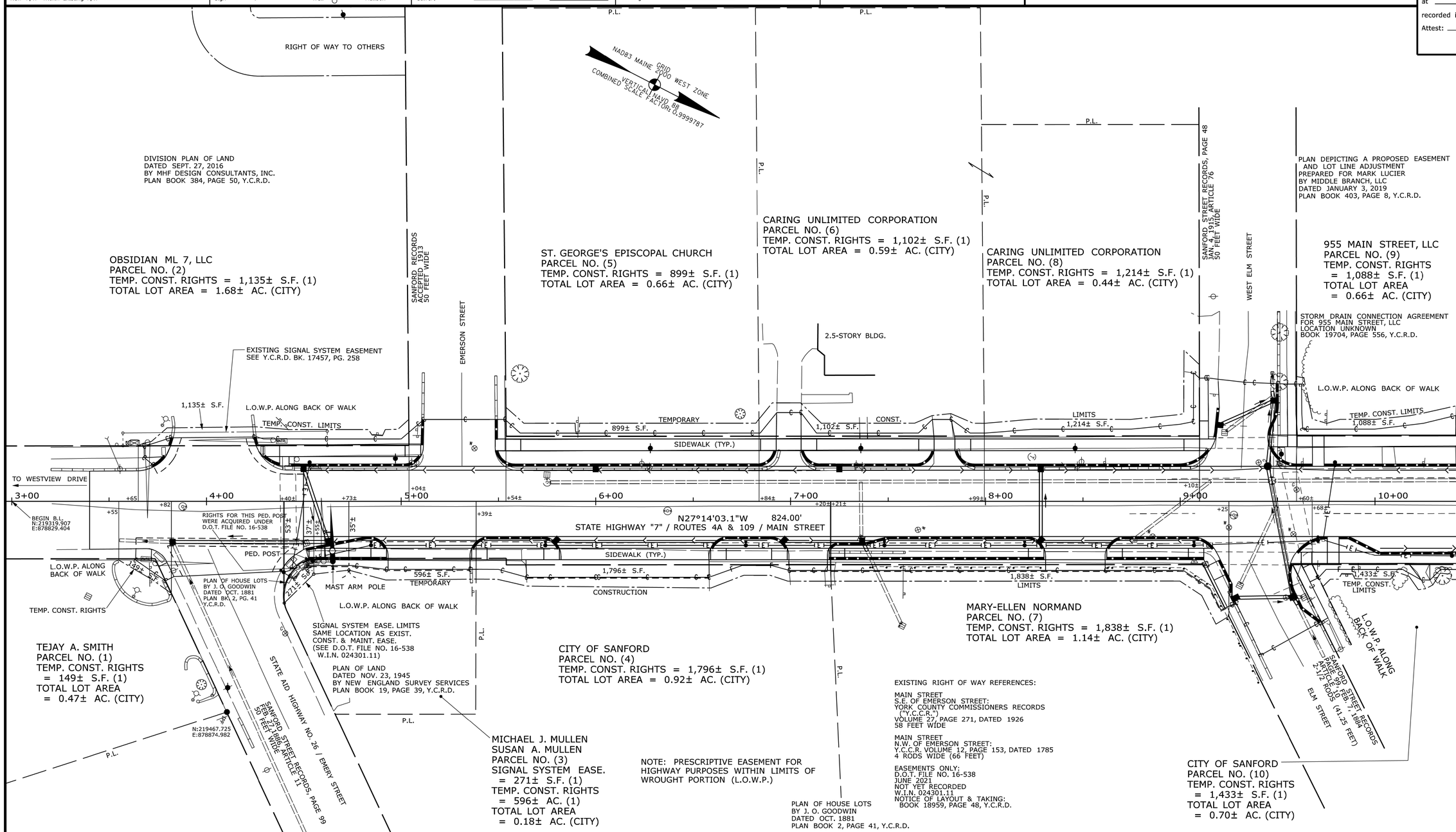

ITEM	TECH	CHECKED
EXISTING CONDITION PLAN	B.S.	GLL & CK
FINAL RIGHT OF WAY	B.S.	D.G.
AREAS	B.S.	J.H.

STATE OF MAINE
DEPARTMENT OF TRANSPORTATION
16 STATE HOUSE STATION - AUGUSTA, ME 04333-0016 - 207-624-3460

SANFORD
RIGHT OF WAY MAP

REVISIONS

NO.	DATE	DESCRIPTION	BY

PLAN FILED IN PLAN BOOK PAGE COUNTY RECORD

NO.	GRANTOR	INSTRUMENT	DATE	BOOK	PAGE

DALE F. DOUGHTY
ACTING COMMISSIONER
WILLIAM A. PULVER
CHIEF ENGINEER
DATE

STATE HIGHWAY "7"
ROUTES 4A & 109 - MAIN STREET
SANFORD YORK COUNTY
WORK IDENTIFICATION NUMBER (W.I.N.) 024395.01

JANUARY 2026	RIGHT-OF-WAY MAP	D.O.T. FILE NO. 16-558
SCALE 1" = 25'	SHEET 1 OF 8	

SHEET NUMBER
188
OF 195

Filename: $file$ Division: $wkgroup$ Username: $user$ Date: $date$

PLAN LEGEND

Town, County, State	New R/W Along Existing R/W	Sanitary Sewer	Traveled Way	Cut Line	Fill Line
Approx. Property Lines P.L.	Building / Clearing Limit Line	Telephone Line	Ditch	Stonewall	Retaining Wall
Existing Right of Way	Trees Conifer / Deciduous	Electric Line	Catch Basin	Baseline 10+00 11+00 12+00	
Limits of Wrought Portion L.O.W.P.	Tree Line / Bush Line	Water Line	Manhole	Monument	Traverse Point
Control Of Access C.O.A.	Water Edge	Underdrain Line	Sewer Manhole	Iron Rod Found IRF	Pipe Found IPF
New Right of Way	Ledge / Rock/Boulder / Flag Pole	Gas Line	Utility Pole	Replacement Pin Set	
New Easement	Fence CHAIN LINK / BARB WIRE / STOCKADE	Guardrail	Fire Hydrant		
New Temporary Rights	Sign / Well / Mailbox	Culvert	Curbing		
New R/W Within Existing R/W					

Existing / Proposed

THIS PLAN WAS PREPARED IN CONNECTION WITH THE DEPARTMENT'S ACQUISITION OF REAL PROPERTY FOR TRANSPORTATION PURPOSES. IT CANNOT BE USED TO ESTABLISH LEGAL BOUNDARIES BETWEEN ABUTTING PROPERTY OWNERS.

25 0 25 50 75 100
Scale of Feet

STATE OF MAINE
REGISTRY OF DEEDS

COUNTY _____
RECEIVED _____, _____
at ____h____m____M and
recorded in Plan Bk ____, Pg. ____
Attest: _____
REGISTER

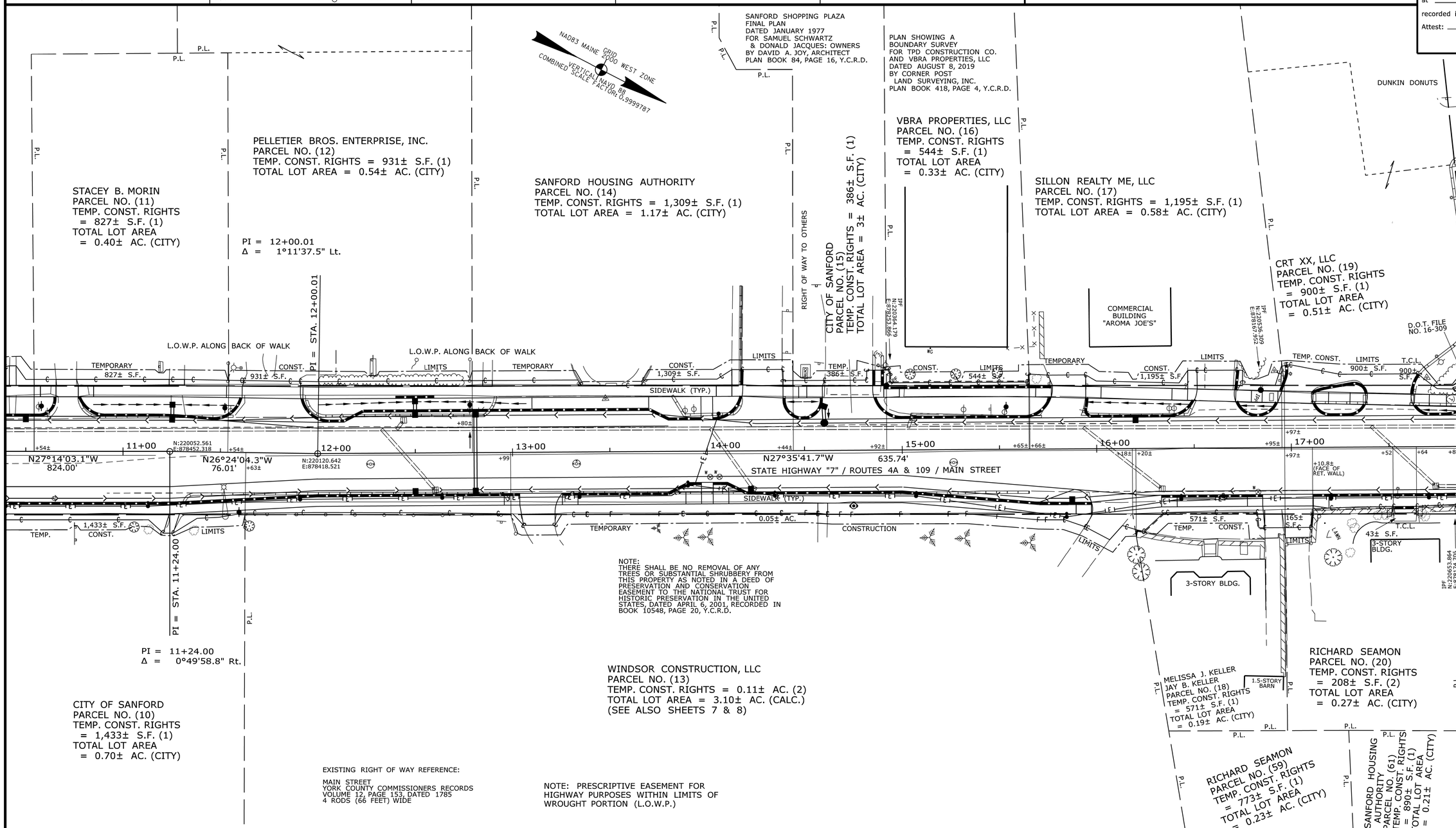

NOTE:
THERE SHALL BE NO REMOVAL OF ANY TREES OR SUBSTANTIAL SHRUBBERY FROM THIS PROPERTY AS NOTED IN A DEED OF PRESERVATION AND CONSERVATION EASEMENT TO THE NATIONAL TRUST FOR HISTORIC PRESERVATION IN THE UNITED STATES, DATED APRIL 6, 2001, RECORDED IN BOOK 10548, PAGE 20, Y.C.R.D.

EXISTING RIGHT OF WAY REFERENCE:

MAIN STREET
YORK COUNTY COMMISSIONERS RECORDS
VOLUME 12, PAGE 153, DATED 1785
4 RODS (66 FEET) WIDE

NOTE: PRESCRIPTIVE EASEMENT FOR HIGHWAY PURPOSES WITHIN LIMITS OF WROUGHT PORTION (L.O.W.P.)

ITEM	TECH	CHECKED
EXISTING CONDITION PLAN	B.S.	GLL & CK
FINAL RIGHT OF WAY	B.S.	D.G.
AREAS	B.S.	J.H.

STATE OF MAINE
DEPARTMENT OF TRANSPORTATION
16 STATE HOUSE STATION - AUGUSTA, ME 04333-0016 - 207-624-3460
SANFORD
RIGHT OF WAY MAP

REVISIONS

NO.	DATE	DESCRIPTION	BY

PLAN FILED IN PLAN BOOK PAGE COUNTY RECORD

NO.	GRANTOR	INSTRUMENT	DATE	BOOK	PAGE

DALE F. DOUGHTY
ACTING COMMISSIONER
WILLIAM A. PULVER
CHIEF ENGINEER
DATE

STATE HIGHWAY "7"
ROUTES 4A & 109 - MAIN STREET
SANFORD YORK COUNTY
WORK IDENTIFICATION NUMBER (W.I.N.) 024395.01

JANUARY 2026	RIGHT-OF-WAY MAP	D.O.T. FILE NO. 16-558
SCALE 1" = 25'	SHEET 2 OF 8	

SHEET NUMBER
189
OF 195

Filename: $file$ Division: $wkgroup$ Username: $user$ Date: $date$

PLAN LEGEND

Town, County, State	New R/W Along Existing R/W	Existing / Proposed: Sanitary Sewer, Telephone Line, Electric Line, Water Line, Underdrain Line, Gas Line, Guardrail, Culvert	Existing / Proposed: Traveled Way, Ditch, Catch Basin, Manhole, Sewer Manhole, Utility Pole, Fire Hydrant, Curbing	Cut Line, Stonewall, Baseline (10+00, 11+00, 12+00), Monument, Iron Rod Found (IRF), Replacement Pin Set	Fill Line, Retaining Wall, Traverse Point, Pipe Found (IPF)
Approx. Property Lines (P.L.)	Building, Clearing Limit Line				
Existing Right of Way	Trees: Conifer, Deciduous				
Limits of Wrought Portion (L.O.W.P.)	Tree Line, Bush Line				
Control Of Access (C.O.A.)	Water Edge				
New Right of Way	Ledge, Rock/Boulder, Flag Pole				
New Easement	Fence: CHAIN LINK, BARB WIRE, STOCKADE				
New Temporary Rights					
New R/W Within Existing R/W	Sign, Well, WELL, Mailbox				

THIS PLAN WAS PREPARED IN CONNECTION WITH THE DEPARTMENT'S ACQUISITION OF REAL PROPERTY FOR TRANSPORTATION PURPOSES. IT CANNOT BE USED TO ESTABLISH LEGAL BOUNDARIES BETWEEN ABUTTING PROPERTY OWNERS.

25 0 25 50 75 100
Scale of Feet

STATE OF MAINE
REGISTRY OF DEEDS

COUNTY _____
RECEIVED _____, _____
at ____h____m____M and
recorded in Plan Bk ____, Pg. ____
Attest: _____
REGISTER

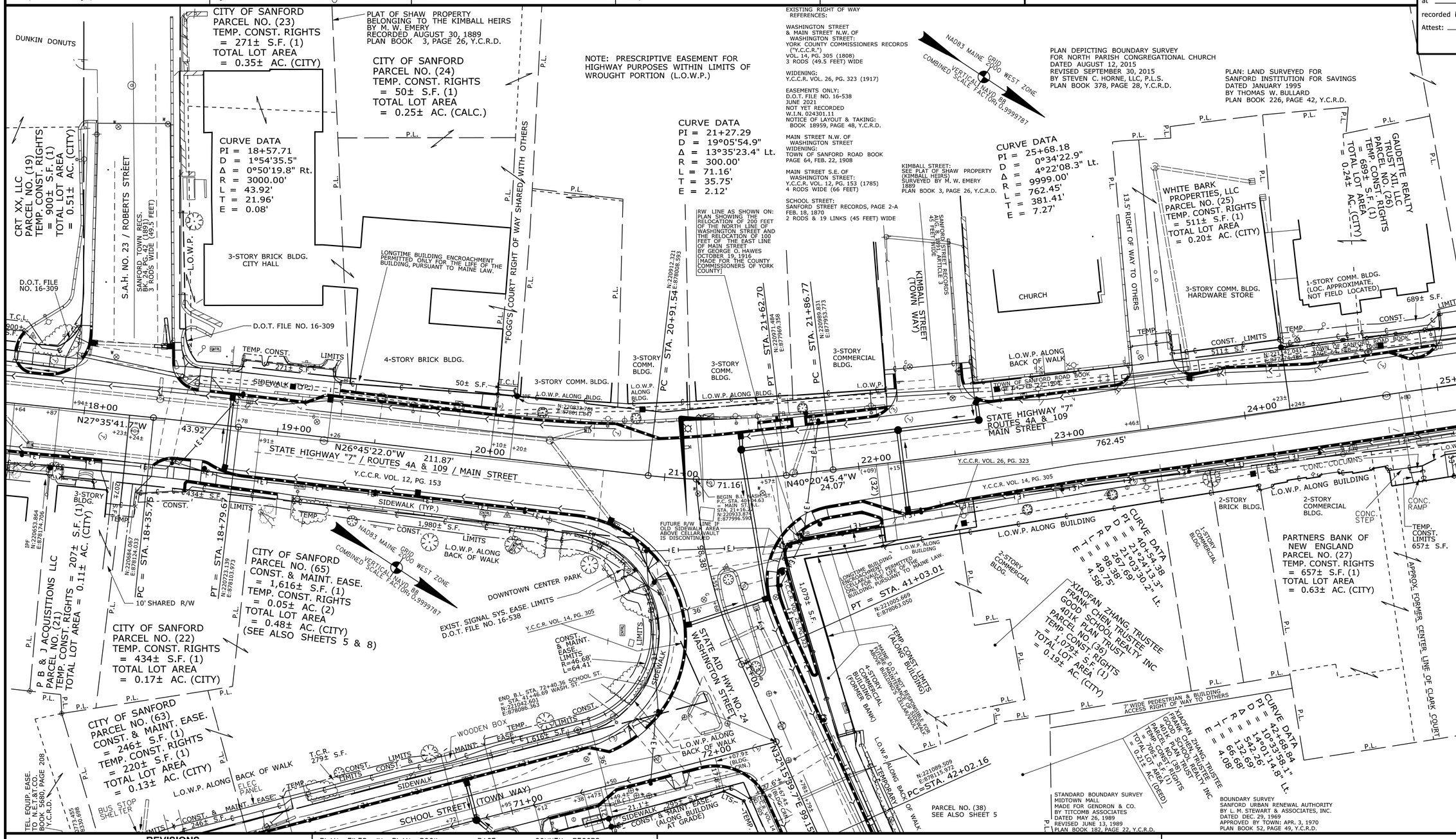

ITEM	TECH	CHECKED
EXISTING CONDITION PLAN	B.S.	GLL & CK
FINAL RIGHT OF WAY	B.S.	D.G.
AREAS	B.S.	J.H.

STATE OF MAINE
DEPARTMENT OF TRANSPORTATION
16 STATE HOUSE STATION - AUGUSTA, ME 04333-0016 - 207-624-3460

SANFORD
RIGHT OF WAY MAP

REVISIONS

NO.	DATE	DESCRIPTION	BY

PLAN FILED IN PLAN BOOK	PAGE	COUNTY RECORD			
NO.	GRANTOR	INSTRUMENT	DATE	BOOK	PAGE

DALE F. DOUGHTY
ACTING COMMISSIONER
WILLIAM A. PULVER
CHIEF ENGINEER
DATE

STATE HIGHWAY "7"
ROUTES 4A & 109 - MAIN STREET
SANFORD YORK COUNTY
WORK IDENTIFICATION NUMBER (W.I.N.) 024395.01

JANUARY 2026	RIGHT-OF-WAY MAP	D.O.T. FILE NO. 16-558
SCALE 1" = 25'	SHEET 3 OF 8	

SHEET NUMBER
190
OF 195

Filename: $file$ Division: $wkgroup$ Username: $user$ Date: $date$

PLAN LEGEND

Town, County, State	New R/W Along Existing R/W	Sanitary Sewer (Existing / Proposed)	Traveled Way (Existing / Proposed)
Approx. Property Lines — P.L.	Building / Clearing Limit Line	Telephone Line	Ditch
Existing Right of Way	Trees — Conifer / Deciduous	Electric Line	Catch Basin
Limits of Wrought Portion — L.O.W.P.	Tree Line / Bush Line	Water Line	Manhole
Control Of Access — C.O.A.	Water Edge	Underdrain Line	Sewer Manhole
New Right of Way	Ledge / Rock/Boulder / Flag Pole	Gas Line	Utility Pole
New Easement	Fence — CHAIN LINK / BARB WIRE / STOCKADE	Guardrail	Fire Hydrant
New Temporary Rights	Sign / Well / WELL / Mailbox	Culvert	Curbing
New R/W Within Existing R/W			

Cut Line / Fill Line; Stonewall / Retaining Wall; Baseline 10+00 11+00 12+00; Monument; Traverse Point; Iron Rod Found IRF; Pipe Found IPF; Replacement Pin Set

THIS PLAN WAS PREPARED IN CONNECTION WITH THE DEPARTMENT'S ACQUISITION OF REAL PROPERTY FOR TRANSPORTATION PURPOSES. IT CANNOT BE USED TO ESTABLISH LEGAL BOUNDARIES BETWEEN ABUTTING PROPERTY OWNERS.

25 0 25 50 75 100
Scale of Feet

STATE OF MAINE
REGISTRY OF DEEDS
COUNTY _____
RECEIVED _____, _____
at ____h____m____M and
recorded in Plan Bk ____, Pg. ____
Attest: _____
REGISTER

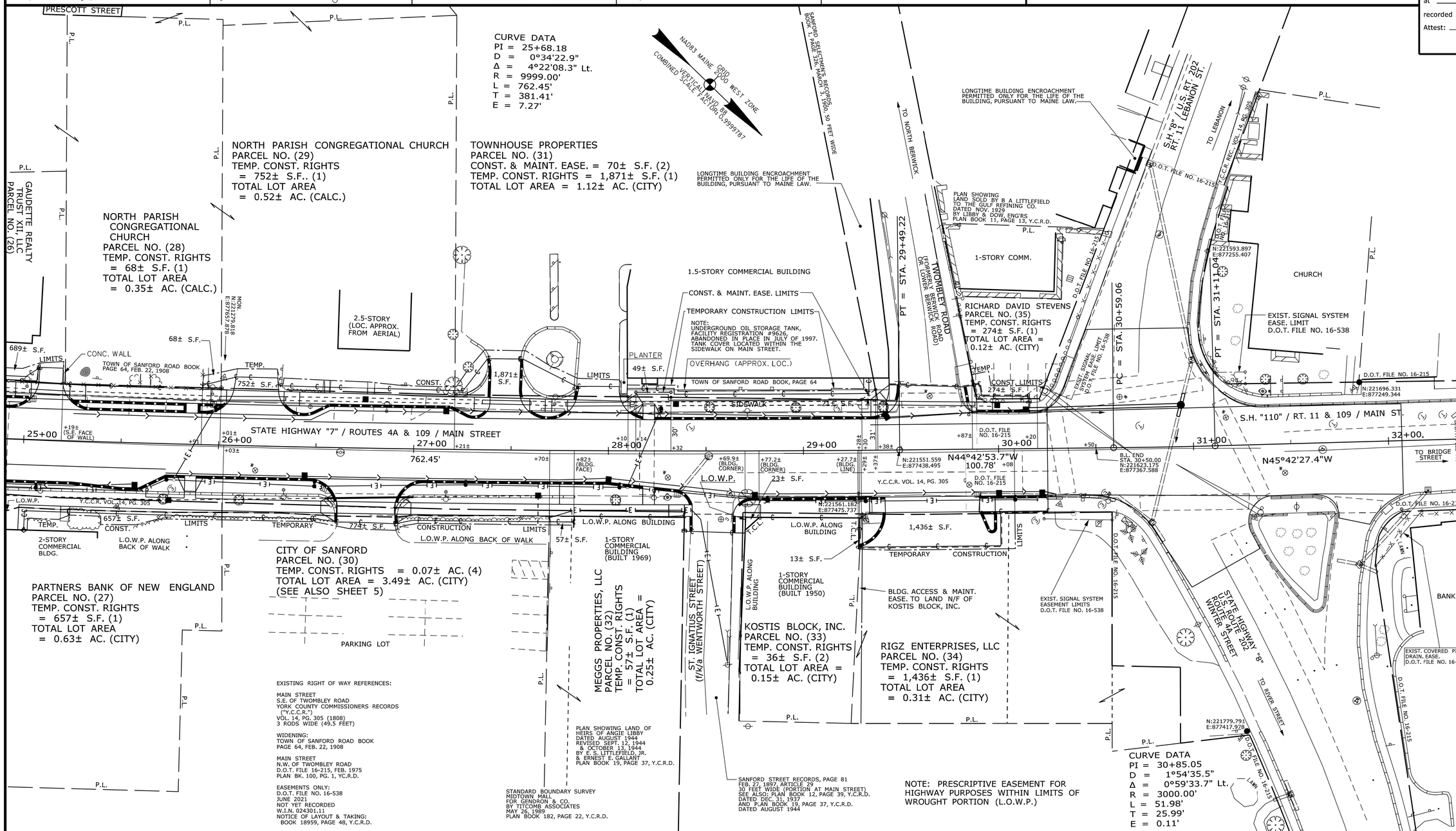

ITEM	TECH	CHECKED
EXISTING CONDITION PLAN	B.S.	GLL & CK
FINAL RIGHT OF WAY	B.S.	D.G.
AREAS	B.S.	J.H.

STATE OF MAINE
DEPARTMENT OF TRANSPORTATION
16 STATE HOUSE STATION - AUGUSTA, ME 04333-0016 - 207-624-3460
SANFORD
RIGHT OF WAY MAP

REVISIONS

NO.	DATE	DESCRIPTION	BY

PLAN FILED IN PLAN BOOK		PAGE	COUNTY RECORD			
NO.	GRANTOR	INSTRUMENT	DATE	BOOK	PAGE	

DALE F. DOUGHTY
ACTING COMMISSIONER
WILLIAM A. PULVER
CHIEF ENGINEER
DATE

STATE HIGHWAY "7"
ROUTES 4A & 109 - MAIN STREET
SANFORD YORK COUNTY
WORK IDENTIFICATION NUMBER (W.I.N.) 024395.01
JANUARY 2026 | RIGHT-OF-WAY MAP | SCALE 1" = 25' | SHEET 4 OF 8
D.O.T. FILE NO. 16-558

SHEET NUMBER
191
OF 195

Date: $date$
Username: $user$
Division: $wkgroup$
Filename: $file$

PLAN LEGEND

Town, County, State	New R/W Along Existing R/W	Sanitary Sewer (Existing / Proposed)	Traveled Way (Existing / Proposed)
Approx. Property Lines — P.L.	Building	Telephone Line	Ditch
Existing Right of Way	Clearing Limit Line	Electric Line	Catch Basin
Limits of Wrought Portion — L.O.W.P.	Trees — Conifer, Deciduous	Water Line	Manhole
Control Of Access — C.O.A.	Tree Line, Bush Line	Underdrain Line	Sewer Manhole
New Right of Way	Water Edge	Gas Line	Utility Pole
New Easement	Ledge, Rock/Boulder, Flag Pole	Guardrail	Fire Hydrant
New Temporary Rights	Fence — CHAIN LINK, BARB WIRE, STOCKADE	Culvert	Curbing
New R/W Within Existing R/W	Sign, Well, WELL, Mailbox		

Cut Line, Fill Line, Stonewall, Retaining Wall, Baseline (10+00, 11+00, 12+00), Monument, Traverse Point, Iron Rod Found (IRF), Pipe Found (IPF), Replacement Pin Set

THIS PLAN WAS PREPARED IN CONNECTION WITH THE DEPARTMENT'S ACQUISITION OF REAL PROPERTY FOR TRANSPORTATION PURPOSES. IT CANNOT BE USED TO ESTABLISH LEGAL BOUNDARIES BETWEEN ABUTTING PROPERTY OWNERS.

25 0 25 50 75 100
Scale of Feet

STATE OF MAINE
REGISTRY OF DEEDS

COUNTY _____
RECEIVED _____, _____
at _____h_____m_____M and
recorded in Plan Bk _____, Pg. _____
Attest: _____
REGISTER

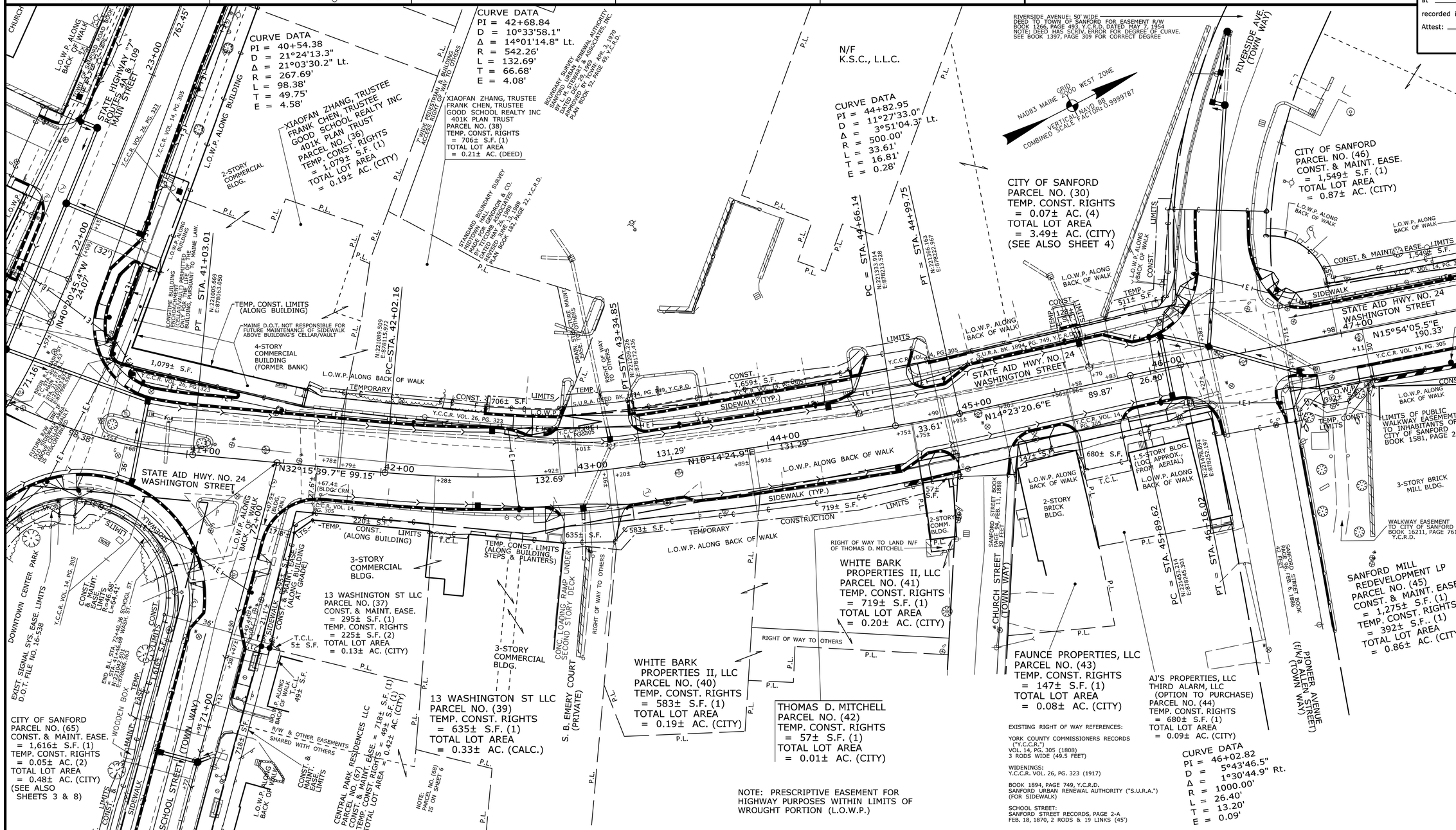

ITEM	TECH	CHECKED
EXISTING CONDITION PLAN	B.S.	GLL & CK
FINAL RIGHT OF WAY	B.S.	D.G.
AREAS	B.S.	J.H.

STATE OF MAINE
DEPARTMENT OF TRANSPORTATION
16 STATE HOUSE STATION - AUGUSTA, ME 04333-0016 - 207-624-3460

SANFORD
RIGHT OF WAY MAP

REVISIONS

NO.	DATE	DESCRIPTION	BY

PLAN FILED IN PLAN BOOK	PAGE	COUNTY RECORD			
NO.	GRANTOR	INSTRUMENT	DATE	BOOK	PAGE

DALE F. DOUGHTY
ACTING COMMISSIONER
WILLIAM A. PULVER
CHIEF ENGINEER
DATE

STATE AID HIGHWAY NO. 24
WASHINGTON STREET
SANFORD — YORK COUNTY
WORK IDENTIFICATION NUMBER (W.I.N.) 024395.01

JANUARY 2026	RIGHT-OF-WAY MAP	D.O.T. FILE NO. 16-558
SCALE 1" = 25'	SHEET 5 OF 8	

SHEET NUMBER
192
OF 195

Date: $date$
Username: $user$
Division: $wkgroup$
Filename: $file$

PLAN LEGEND

Town, County, State	New R/W Along Existing R/W	Existing / Proposed: Sanitary Sewer, Telephone Line, Electric Line, Water Line, Underdrain Line, Gas Line, Guardrail, Culvert	Existing / Proposed: Traveled Way, Ditch, Catch Basin, Manhole, Sewer Manhole, Utility Pole, Fire Hydrant, Curbing	Cut Line, Stonewall, Baseline (10+00, 11+00, 12+00), Monument, Iron Rod Found (IRF), Replacement Pin Set	Fill Line, Retaining Wall, Traverse Point, Pipe Found (IPF)
Approx. Property Lines (P.L.)	Building, Clearing Limit Line				
Existing Right of Way	Trees: Conifer, Deciduous				
Limits of Wrought Portion (L.O.W.P.)	Tree Line, Bush Line				
Control Of Access (C.O.A.)	Water Edge				
New Right of Way	Ledge, Rock/Boulder, Flag Pole				
New Easement	Fence: CHAIN LINK, BARB WIRE, STOCKADE				
New Temporary Rights					
New R/W Within Existing R/W	Sign, Well, WELL, Mailbox				

THIS PLAN WAS PREPARED IN CONNECTION WITH THE DEPARTMENT'S ACQUISITION OF REAL PROPERTY FOR TRANSPORTATION PURPOSES. IT CANNOT BE USED TO ESTABLISH LEGAL BOUNDARIES BETWEEN ABUTTING PROPERTY OWNERS.

25 0 25 50 75 100
Scale of Feet

STATE OF MAINE
REGISTRY OF DEEDS

COUNTY _____
RECEIVED _____, _____
at _____h_____m_____M and
recorded in Plan Bk _____, Pg. _____
Attest: _____
REGISTER

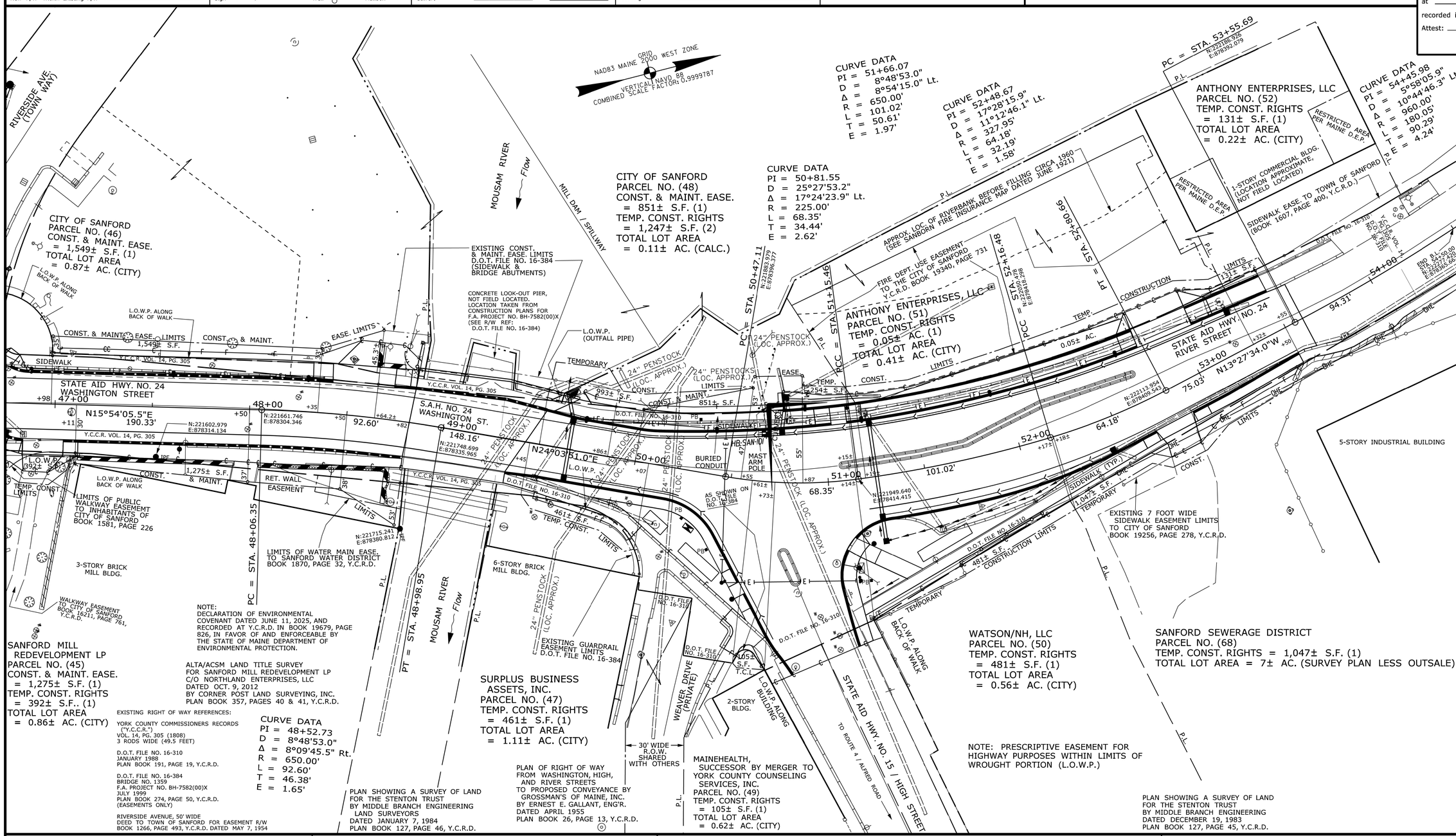

NOTE:
DECLARATION OF ENVIRONMENTAL COVENANT DATED JUNE 11, 2025, AND RECORDED AT Y.C.R.D. IN BOOK 19679, PAGE 826, IN FAVOR OF AND ENFORCEABLE BY THE STATE OF MAINE DEPARTMENT OF ENVIRONMENTAL PROTECTION.

ALTA/ACSM LAND TITLE SURVEY FOR SANFORD MILL REDEVELOPMENT LP C/O NORTHLAND ENTERPRISES, LLC DATED OCT. 9, 2012 BY CORNER POST LAND SURVEYING, INC. PLAN BOOK 357, PAGES 40 & 41, Y.C.R.D.

SANFORD MILL REDEVELOPMENT LP
PARCEL NO. (45)
CONST. & MAINT. EASE.
= 1,275± S.F. (1)
TEMP. CONST. RIGHTS
= 392± S.F.. (1)
TOTAL LOT AREA
= 0.86± AC. (CITY)

EXISTING RIGHT OF WAY REFERENCES:

YORK COUNTY COMMISSIONERS RECORDS ("Y.C.C.R.")
VOL. 14, PG. 305 (1808)
3 RODS WIDE (49.5 FEET)

D.O.T. FILE NO. 16-310
JANUARY 1988
PLAN BOOK 191, PAGE 19, Y.C.R.D.

D.O.T. FILE NO. 16-384
BRIDGE NO. 1359
F.A. PROJECT NO. BH-7582(00)X
JULY 1999
PLAN BOOK 274, PAGE 50, Y.C.R.D.
(EASEMENTS ONLY)

RIVERSIDE AVENUE, 50' WIDE
DEED TO TOWN OF SANFORD FOR EASEMENT R/W
BOOK 1266, PAGE 493, Y.C.R.D. DATED MAY 7, 1954

CURVE DATA
PI = 48+52.73
D = 8°48'53.0"
Δ = 8°09'45.5" Rt.
R = 650.00'
L = 92.60'
T = 46.38'
E = 1.65'

PLAN SHOWING A SURVEY OF LAND FOR THE STENTON TRUST BY MIDDLE BRANCH ENGINEERING LAND SURVEYORS DATED JANUARY 7, 1984 PLAN BOOK 127, PAGE 46, Y.C.R.D.

SURPLUS BUSINESS ASSETS, INC.
PARCEL NO. (47)
TEMP. CONST. RIGHTS
= 461± S.F. (1)
TOTAL LOT AREA
= 1.11± AC. (CITY)

PLAN OF RIGHT OF WAY FROM WASHINGTON, HIGH, AND RIVER STREETS TO PROPOSED CONVEYANCE BY GROSSMAN'S OF MAINE, INC. BY ERNEST E. GALLANT, ENG'R. DATED APRIL 1955 PLAN BOOK 26, PAGE 13, Y.C.R.D.

MAINEHEALTH, SUCCESSOR BY MERGER TO YORK COUNTY COUNSELING SERVICES, INC.
PARCEL NO. (49)
TEMP. CONST. RIGHTS
= 105± S.F. (1)
TOTAL LOT AREA
= 0.62± AC. (CITY)

WATSON/NH, LLC
PARCEL NO. (50)
TEMP. CONST. RIGHTS
= 481± S.F. (1)
TOTAL LOT AREA
= 0.56± AC. (CITY)

NOTE: PRESCRIPTIVE EASEMENT FOR HIGHWAY PURPOSES WITHIN LIMITS OF WROUGHT PORTION (L.O.W.P.)

SANFORD SEWERAGE DISTRICT
PARCEL NO. (68)
TEMP. CONST. RIGHTS = 1,047± S.F. (1)
TOTAL LOT AREA = 7± AC. (SURVEY PLAN LESS OUTSALE)

PLAN SHOWING A SURVEY OF LAND FOR THE STENTON TRUST BY MIDDLE BRANCH ENGINEERING DATED DECEMBER 19, 1983 PLAN BOOK 127, PAGE 45, Y.C.R.D.

ITEM	TECH	CHECKED
EXISTING CONDITION PLAN	B.S.	GLL & CK
FINAL RIGHT OF WAY	B.S.	D.G.
AREAS	B.S.	J.H.

STATE OF MAINE
DEPARTMENT OF TRANSPORTATION
16 STATE HOUSE STATION - AUGUSTA, ME 04333-0016 - 207-624-3460
SANFORD
RIGHT OF WAY MAP

REVISIONS

NO.	DATE	DESCRIPTION	BY

PLAN FILED IN PLAN BOOK PAGE COUNTY RECORD

NO.	GRANTOR	INSTRUMENT	DATE	BOOK	PAGE

DALE F. DOUGHTY
ACTING COMMISSIONER

WILLIAM A. PULVER
CHIEF ENGINEER

DATE

STATE AID HIGHWAY NO. 24
WASHINGTON STREET & RIVER STREET
SANFORD YORK COUNTY
WORK IDENTIFICATION NUMBER (W.I.N.) 024395.01

JANUARY 2026	RIGHT-OF-WAY MAP	D.O.T. FILE NO. 16-558
SCALE 1" = 25'	SHEET 6 OF 8	

SHEET NUMBER
193
OF 195

Date: $date$
Username: $user$
Division: $wkgroup$
Filename: $file$

PLAN LEGEND

Town, County, State	New R/W Along Existing R/W	Sanitary Sewer (Existing / Proposed)	Traveled Way (Existing / Proposed)
Approx. Property Lines — P.L.	Building — Clearing Limit Line	Telephone Line	Ditch
Existing Right of Way	Trees — Conifer — Deciduous	Electric Line	Catch Basin
Limits of Wrought Portion — L.O.W.P.	Tree Line — Bush Line	Water Line	Manhole
Control Of Access — C.O.A.	Water Edge	Underdrain Line	Sewer Manhole
New Right of Way	Ledge — Rock/Boulder — Flag Pole	Gas Line	Utility Pole
New Easement	Fence — CHAIN LINK — BARB WIRE — STOCKADE	Guardrail	Fire Hydrant
New Temporary Rights	Sign — Well — Mailbox	Culvert	Curbing
New R/W Within Existing R/W			

Cut Line — Fill Line
Stonewall — Retaining Wall
Baseline — 10+00 — 11+00 — 12+00
Monument — Traverse Point
Iron Rod Found — IRF — Pipe Found — IPF
Replacement Pin Set

THIS PLAN WAS PREPARED IN CONNECTION WITH THE DEPARTMENT'S ACQUISITION OF REAL PROPERTY FOR TRANSPORTATION PURPOSES. IT CANNOT BE USED TO ESTABLISH LEGAL BOUNDARIES BETWEEN ABUTTING PROPERTY OWNERS.

25 0 25 50 75 100
Scale of Feet

STATE OF MAINE
REGISTRY OF DEEDS

COUNTY _____
RECEIVED _____, _____
at _____h_____m_____M and
recorded in Plan Bk _____, Pg. _____
Attest: _____
REGISTER

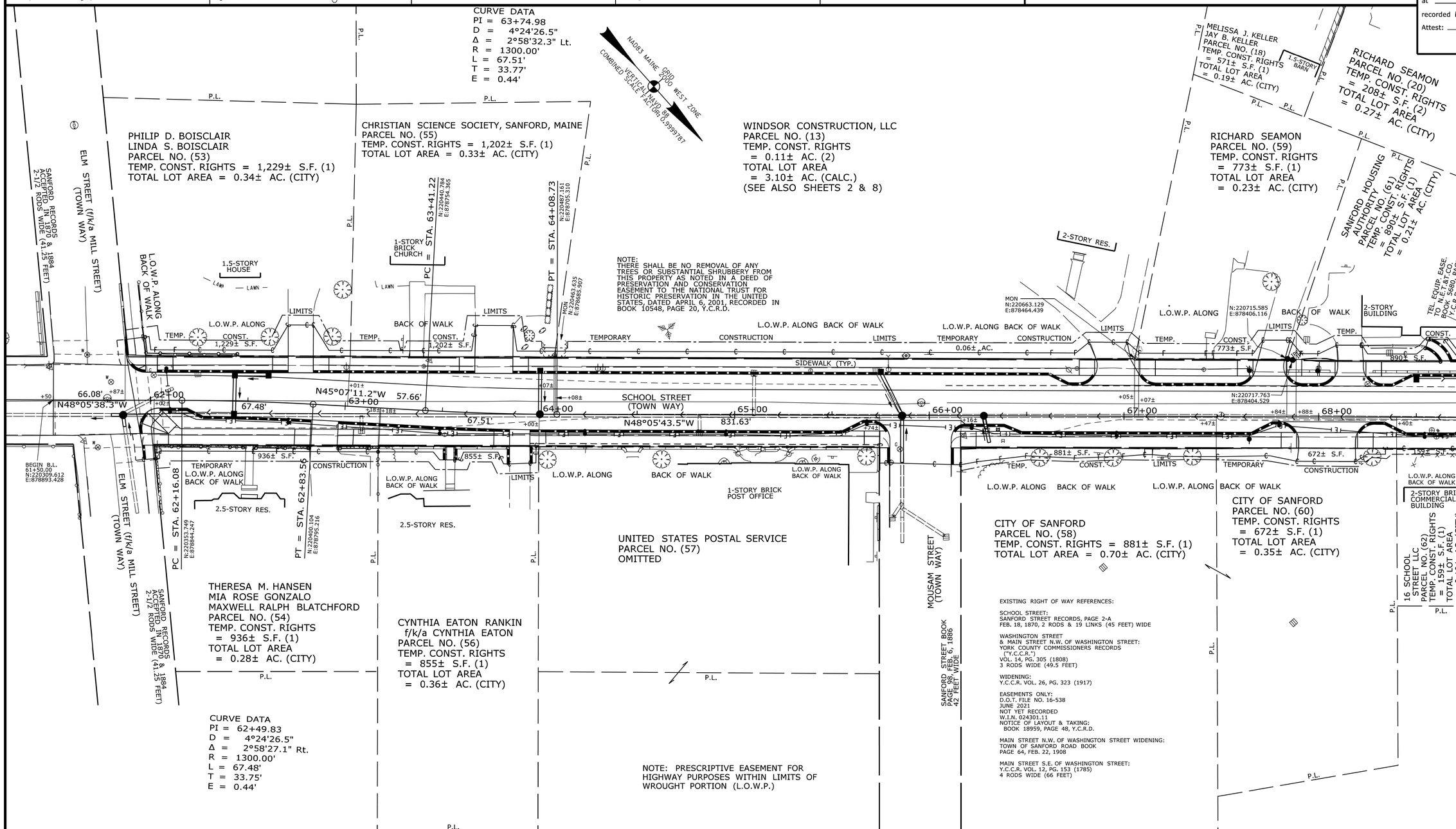

ITEM	TECH	CHECKED
EXISTING CONDITION PLAN	B.S.	GLL & CK
FINAL RIGHT OF WAY	B.S.	D.G.
AREAS	B.S.	J.H.

STATE OF MAINE
DEPARTMENT OF TRANSPORTATION
16 STATE HOUSE STATION - AUGUSTA, ME 04333-0016 - 207-624-3460
SANFORD
RIGHT OF WAY MAP

REVISIONS

NO.	DATE	DESCRIPTION	BY

PLAN FILED IN PLAN BOOK			PAGE	COUNTY RECORD		
NO.	GRANTOR	INSTRUMENT	DATE	BOOK	PAGE	

DALE F. DOUGHTY
ACTING COMMISSIONER
WILLIAM A. PULVER
CHIEF ENGINEER
DATE

SCHOOL STREET
(TOWN WAY)
SANFORD — YORK COUNTY
WORK IDENTIFICATION NUMBER (W.I.N.) 024395.01

JANUARY 2026	RIGHT-OF-WAY MAP	D.O.T. FILE NO. 16-558
SCALE 1" = 25'	SHEET 7 OF 8	

SHEET NUMBER
194
OF 195

Filename: $file$ Division: $wkgroup$ Username: $user$ Date: $date$

PLAN LEGEND

Town, County, State	New R/W Along Existing R/W	Sanitary Sewer (Existing / Proposed)	Traveled Way (Existing / Proposed)
Approx. Property Lines — P.L.	Building — Clearing Limit Line	Telephone Line	Ditch
Existing Right of Way	Trees — Conifer — Deciduous	Electric Line	Catch Basin
Limits of Wrought Portion — L.O.W.P.	Tree Line — Bush Line	Water Line	Manhole
Control Of Access — C.O.A.	Water Edge	Underdrain Line	Sewer Manhole
New Right of Way	Ledge — Rock/Boulder — Flag Pole	Gas Line	Utility Pole
New Easement	Fence — CHAIN LINK — BARB WIRE — STOCKADE	Guardrail	Fire Hydrant
New Temporary Rights	Sign — Well — WELL — Mailbox	Culvert	Curbing
New R/W Within Existing R/W			

Cut Line	Fill Line	
Stonewall	Retaining Wall	
Baseline 10+00 11+00 12+00		
Monument	Traverse Point	
Iron Rod Found — IRF	Pipe Found — IPF	
Replacement Pin Set		

THIS PLAN WAS PREPARED IN CONNECTION WITH THE DEPARTMENT'S ACQUISITION OF REAL PROPERTY FOR TRANSPORTATION PURPOSES. IT CANNOT BE USED TO ESTABLISH LEGAL BOUNDARIES BETWEEN ABUTTING PROPERTY OWNERS.

25 0 25 50 75 100
Scale of Feet

STATE OF MAINE
REGISTRY OF DEEDS

COUNTY _____
RECEIVED _____, _____
at ____h____m____M and
recorded in Plan Bk ____, Pg. ____
Attest: _____
REGISTER

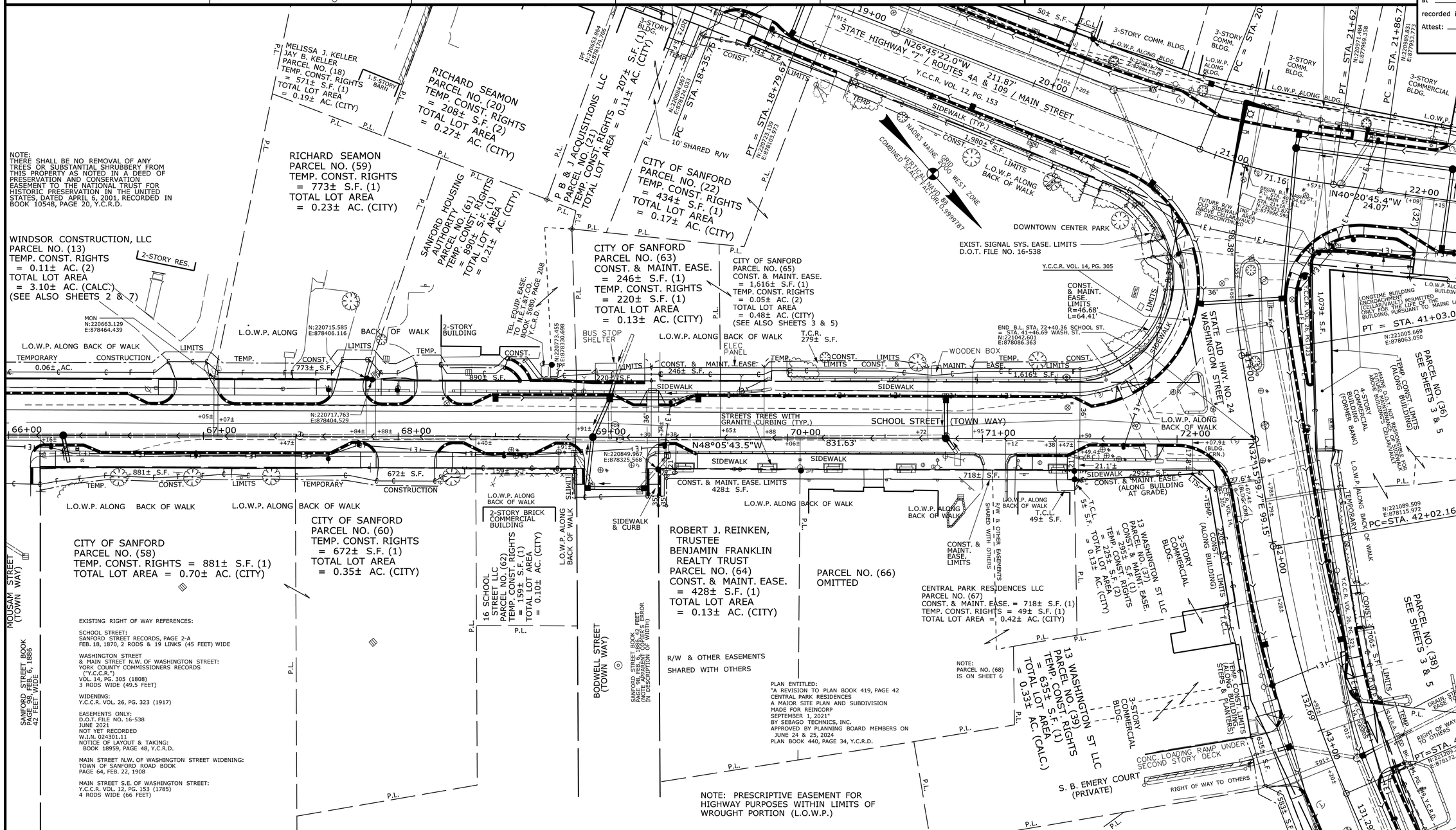

ITEM	TECH	CHECKED
EXISTING CONDITION PLAN	B.S.	GLL & CK
FINAL RIGHT OF WAY	B.S.	D.G.
AREAS	B.S.	J.H.

STATE OF MAINE
DEPARTMENT OF TRANSPORTATION
16 STATE HOUSE STATION - AUGUSTA, ME 04333-0016 - 207-624-3460

SANFORD
RIGHT OF WAY MAP

REVISIONS

NO.	DATE	DESCRIPTION	BY

PLAN FILED IN PLAN BOOK PAGE COUNTY RECORD

NO.	GRANTOR	INSTRUMENT	DATE	BOOK	PAGE

DALE F. DOUGHTY
ACTING COMMISSIONER
WILLIAM A. PULVER
CHIEF ENGINEER
DATE

SCHOOL STREET
(TOWN WAY)
SANFORD YORK COUNTY
WORK IDENTIFICATION NUMBER (W.I.N.) 024395.01

JANUARY 2026	RIGHT-OF-WAY MAP	D.O.T. FILE NO. 16-558
SCALE 1" = 25'	SHEET 8 OF 8	

SHEET NUMBER
195
OF 195

Date: $date$ Username: $user$ Division: $wkgroup$ Filename: $file$

PLANS PREPARED BY:

vhb 600 Southborough Drive, Suite 100 South Portland, Maine 04106

CITY OF SANFORD

SANFORDNET FIBER UNDERGROUND CONDUIT

MAY 20, 2026

PLAN LEGEND

- Town, County, State
- Property Lines
- R/W Lines-Existing
- Project Baseline (10+00)
- Culvert-Existing
- Culvert Proposed
- Curbing-Existing
- Type 1
- Type 3
- Type 5
- Outline of Bodies of Water
- Existing Travelway
- Existing Ditch
- Catch Basins — Existing ■ Proposed
- Manholes — Existing ● Proposed
- Existing San. Sewer Manhole
- Existing Utility Poles
- Existing Fire Hydrants
- Existing Water Line
- Existing San. Sewer
- Proposed San. Sewer
- Existing Gas Line
- Guardrail-Existing
- Guardrail-Cable, Other
- Buildings
- Trees — Conifer, Deciduous
- Tree Line

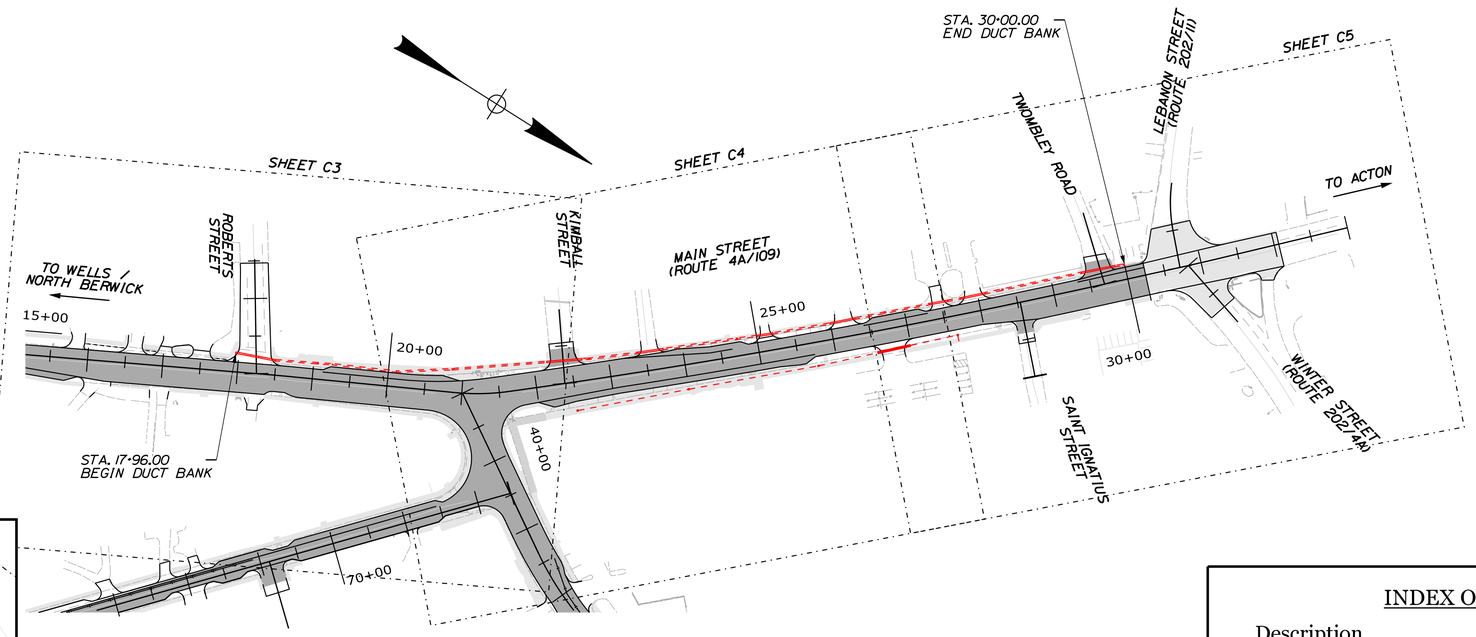

LAYOUT SCALE

100 0 100 200

Scale in Feet

0 1/2 1

Scale in Miles

LOCATION MAP

INDEX OF SHEETS

Description	Sheet No.
Title Sheet	C1
Typicals	C2
General Plans	C3-C5

PROJECT LOCATION:	BEGINNING AT THE INTERSECTION WITH ROBERTS STREET AND EXTENDING 0.23 MILES TO THE INTERSECTION WITH LEBANON STREET

CITY OF SANFORD
919 MAIN STREET
SANFORD, MAINE 04073

APPROVED — DATE

SUPERINTENDENT:

STATE OF MAINE — ETHAN C. FLYNN 13436 — LICENSED PROFESSIONAL ENGINEER

SIGNATURE

P.E. NUMBER 13436

DATE 7/30/2026

PROJECT INFORMATION

PROGRAM	HIGHWAY
PROJECT MANAGER	MATTHEW HILL
DESIGNER	E. FLYNN
CONSULTANT	VHB
PROJECT RESIDENT	
CONTRACTOR	
PROJECT COMPLETION DATE	

SANFORD
SANFORDNET FIBER UNDERGROUND CONDUIT

TITLE SHEET

SHEET NUMBER

C1

OF 5

Filename: ...\001_Title_Conduit.dgn Division: HIGHWAY Username: bdarrah Date:8/19/2026

NOTES:

1. DUCT BANKS SHALL BE CONCRETE ENCASED ONLY WHEN CROSSING UNDER THE ROADWAY AND CURBING. SECONDARY SERVICE ARE NOT PART OF CONCRETE ENCASED DUCT BANKS.
2. CONCRETE ENCASED DUCT BANK SHALL HAVE AT LEAST FOUR INCHES OF CONCRETE AT THE TOP, FOUR INCHES AT THE BOTTOM, AND FOUR INCHES ON EACH SIDE AS COVER.
3. INTERIOR SPACING BETWEEN ALL CONDUITS SHALL BE AT LEAST TWO INCHES.
4. A HORIZONTAL AND VERTICAL SEPARATION BETWEEN THE DUCTS OF TWO INCHES SHALL BE MAINTAINED BY INSTALLING UNDERGROUND DEVICES HIGH IMPACT POLYSTYRENE SPACERS. SPACERS SHALL BE INTERLOCKED HORIZONTALLY ONLY. ALONG THE DUCT RUN SPACERS SHALL BE STAGGERED VERTICALLY AND SHALL BE PLACED AT AN INTERVAL OF FOUR SPACERS PER 20 FEET (5 FEET APART).
5. DUCT BANK SHALL BE CENTERED UNDER SIDEWALK WHERE POSSIBLE.
6. THE DUCT BANK SHOULD BE OF MONOLITHIC CONSTRUCTION.
7. WHEN PLACING CONCRETE AROUND CONDUITS ADJUST THE DELIVERY CHUTE SO THE FALL OF THE CONCRETE INTO THE TRENCH IS MINIMAL. POUR THE CONCRETE SLOWLY AND DISTRIBUTE IT EVENLY SO AS NOT TO DISLODGE THE SPACERS.
8. CONDUIT SHALL BE SCHEDULE 40 ELECTRICAL CONDUIT (NEMA TC-3 STANDARD) AND INCLUDE A PRE-INSTALLED PULL TAPE WITH A MINIMUM TENSILE STENGTH OF 210 LBS.
9. WHERE NECESSARY, 45 DEGREE LONG RADIUS ELBOWS SHALL BE USED AT CORNERS.
10. SLACK LOOPS SHALL BE PLACED IN PULL BOXES, SPACED NO FURTHER THAN 600 FEET APART.
11. CONDUITS MUST HAVE A PULL STRING OR TAPE INSTALLED WITH A TENSILE STRENGTH BETWEEN 210 TO 250 LBS. THE PULL STRING SHALL EXTEND AT LEAST 2 FEET BEYOND EACH END OF THE CONDUIT.
12. CONDUIT ENDS SHALL BE CAPPED AFTER INSTALLATION.
13. PLACE WARNING MARKER TAPE ABOVE THE CONDUIT WHEN BACKFILLING. THE TAPE SHOULD INCLUDE TRACEABLE WIRE OR LOCATING TAPE THAT CAN BE DETECTED BY A CABLE LOCATOR. ENSURE THAT THE BACKFILL IS DONE CAREFULLY AROUND THE MARKER TAPE AND CONDUIT, AND THAT THE TRACEABLE WIRE IS KEPT INTACT TO ALLOW FUTURE DETECTION OF THE CONDUIT WITHOUT EXCAVATION.

ESTIMATED QUANTITIES

ITEM NO.	ITEM DESCRIPTION	UNIT	TOTAL QUANTITY
626.11	PRECAST CONCRETE JUNCTION BOX	EA	11
626.22	NON-METALLIC CONDUIT	LF	1,400
626.221	NON-METALLIC CONDUIT, CONCRETE ENCASED	LF	340
652.33	DRUM	EA	40
652.34	CONE	EA	70
652.361	MAINTENANCE OF TRAFFIC CONTROL DEVICES	CD	21
652.38	FLAGGER	HR	300
659.10	MOBILIZATION	LS	1

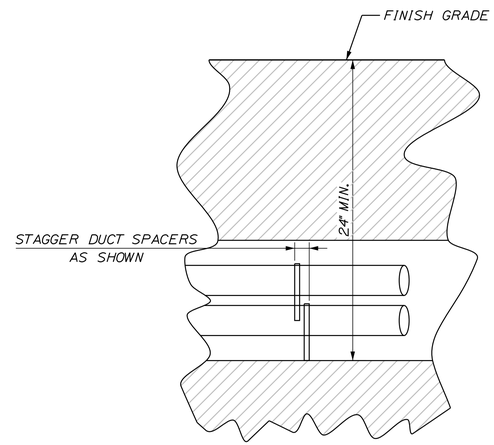

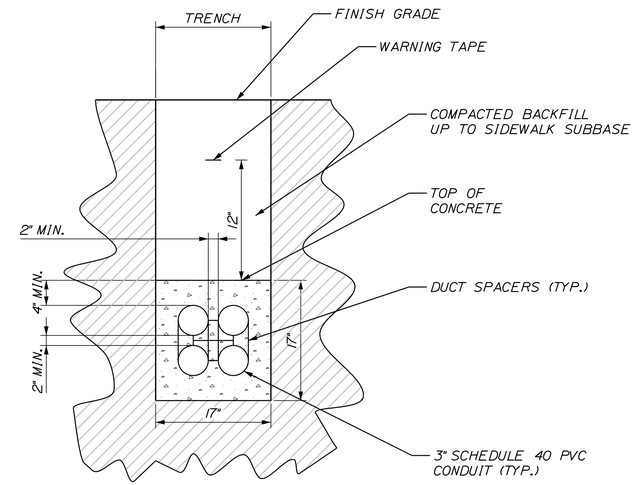

TYPICAL SECTION - CONCRETE ENCASED DUCT BANK (2X2)
NOT TO SCALE

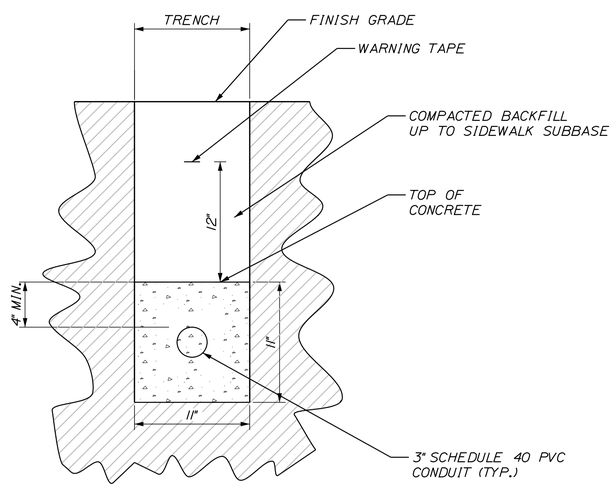

TYPICAL SECTION - CONCRETE ENCASED SINGLE 3" CONDUIT
NOT TO SCALE

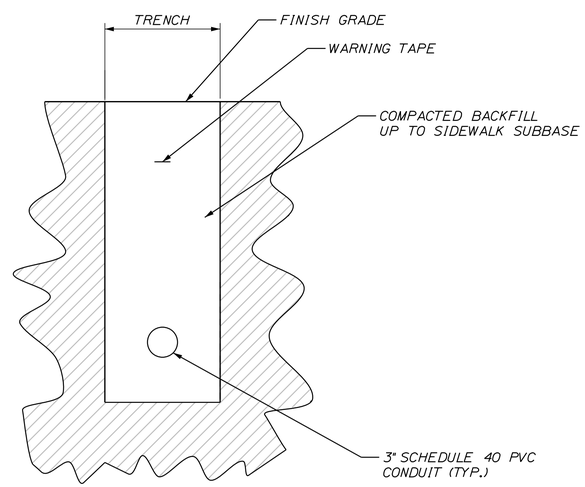

TYPICAL SECTION - SINGLE 3" CONDUIT
NOT TO SCALE

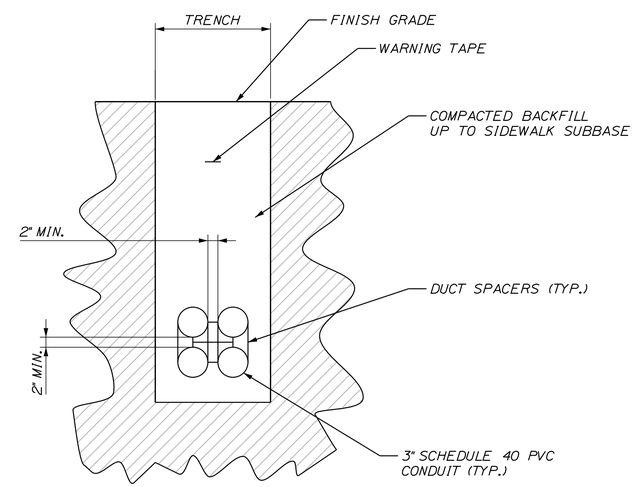

TYPICAL SECTION - DUCT BANK (2X2)
NOT TO SCALE

NOT TO SCALE

CITY OF SANFORD
SANFORDNET FIBER

vhb

PROJ. MANAGER	M. HILL		
DESIGN-DETAILED	BMD	CPN	8/19/2026
CHECKED-REVIEWED	DMP	ECF	8/19/2026
DESIGN2-DETAILED2			
DESIGN3-DETAILED3			
REVISIONS 1			
REVISIONS 2			
REVISIONS 3			
REVISIONS 4			
FIELD CHANGES			

SANFORD
SANFORDNET FIBER UNDERGROUND CONDUIT

TYPICALS

SHEET NUMBER
C2
OF 5

Filename: ...\010_Typicals - Ductbank.dgn Division: HIGHWAY Username: bdarrah Date:8/19/2026

NOTES:

1. LOCATIONS SHOWN ARE APPROXIMATE AND MAY BE ADJUSTED AS DIRECTED BY THE RESIDENT IF NECESSARY DUE TO ON-SITE CONDITIONS AND CONSTRUCTION OF THE DOWNTOWN IMPROVEMENTS PROJECT.
2. PROPOSED ROADWAY IMPROVEMENTS AS PART OF THE RAISE GRANT PROJECT ARE ALSO SHOWN ON THESE PLANS FOR REFERENCE.
3. EXISTING UNDERGROUND ELECTRICAL LINE FOR PEDESTRIAN LIGHTING WILL BE ABANDONED. AND NEW ELECTRICAL LINE WILL BE LOCATED WITHIN THE PROPOSED DUCT BANK.

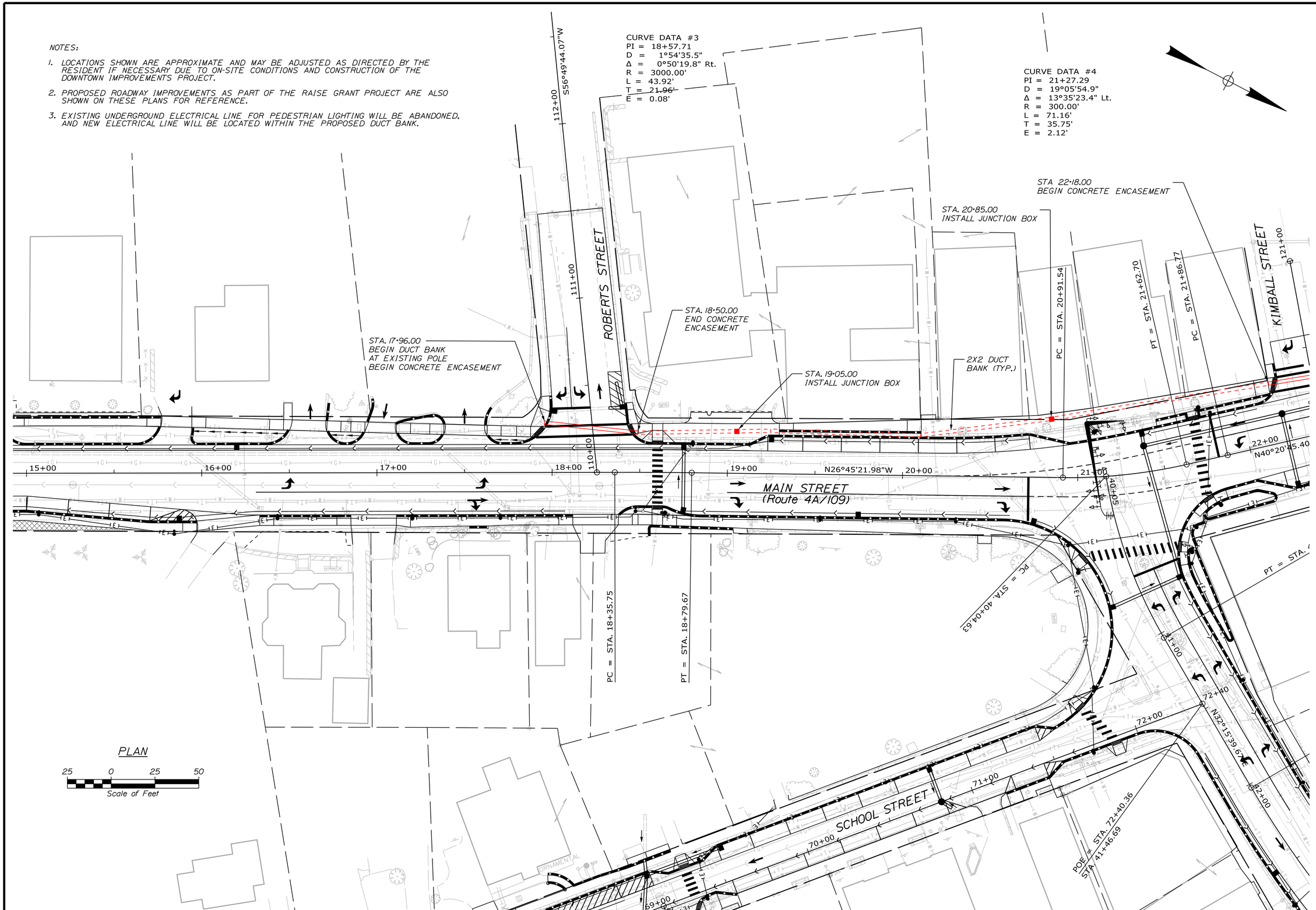

CITY OF SANFORD
SANFORDNET FIBER

vhb

	BY	DATE
PROJ. MANAGER M. HILL		
DESIGN-DETAILED	BMD	8/19/2026
CHECKED-REVIEWED	DMP	8/19/2026
DESIGN2-DETAILED2		
DESIGN3-DETAILED3		
REVISIONS 1		
REVISIONS 2		
REVISIONS 3		
REVISIONS 4		
FIELD CHANGES		

SANFORD
SANFORDNET FIBER UNDERGROUND CONDUIT
GENERAL PLANS

SHEET NUMBER
C3
OF 5

Filename: ...\020_Plans_DuctBank.dgn Division: HIGHWAY Username: bdarrah Date:8/19/2026

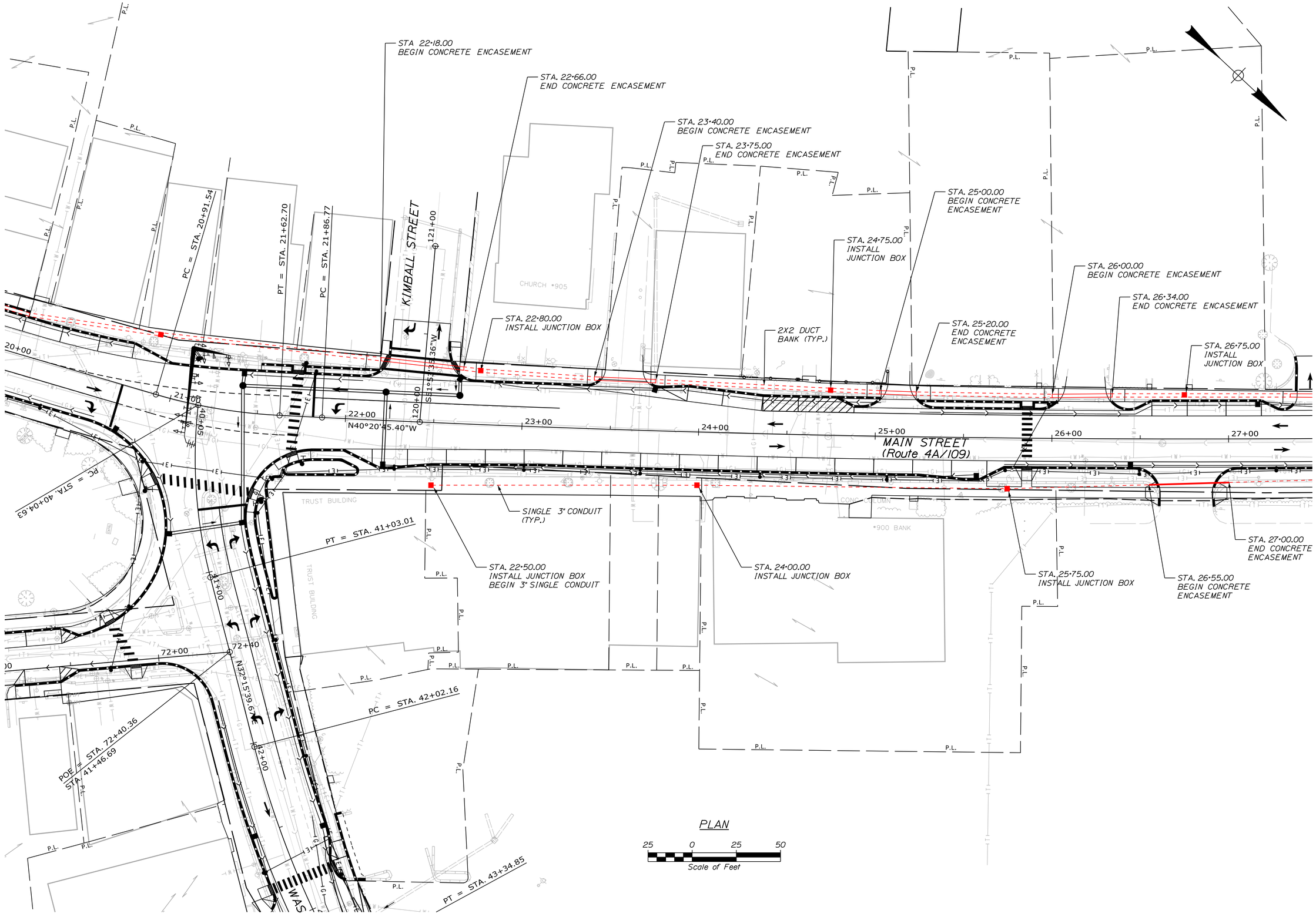

CITY OF SANFORD
SANFORDNET FIBER

vhb

	BY	DATE
PROJ. MANAGER	M. HILL	
DESIGN-DETAILED	BMD	8/19/2026
CHECKED-REVIEWED	DMP	8/19/2026
DESIGN2-DETAILED2		
DESIGN3-DETAILED3		
REVISIONS 1		
REVISIONS 2		
REVISIONS 3		
REVISIONS 4		
FIELD CHANGES		

SANFORD
SANFORDNET FIBER UNDERGROUND CONDUIT

GENERAL PLANS

SHEET NUMBER

C4

OF 5

Filename: ...\020_Plans_DuctBank.dgn Division: HIGHWAY Username: bdarrah Date:8/19/2026

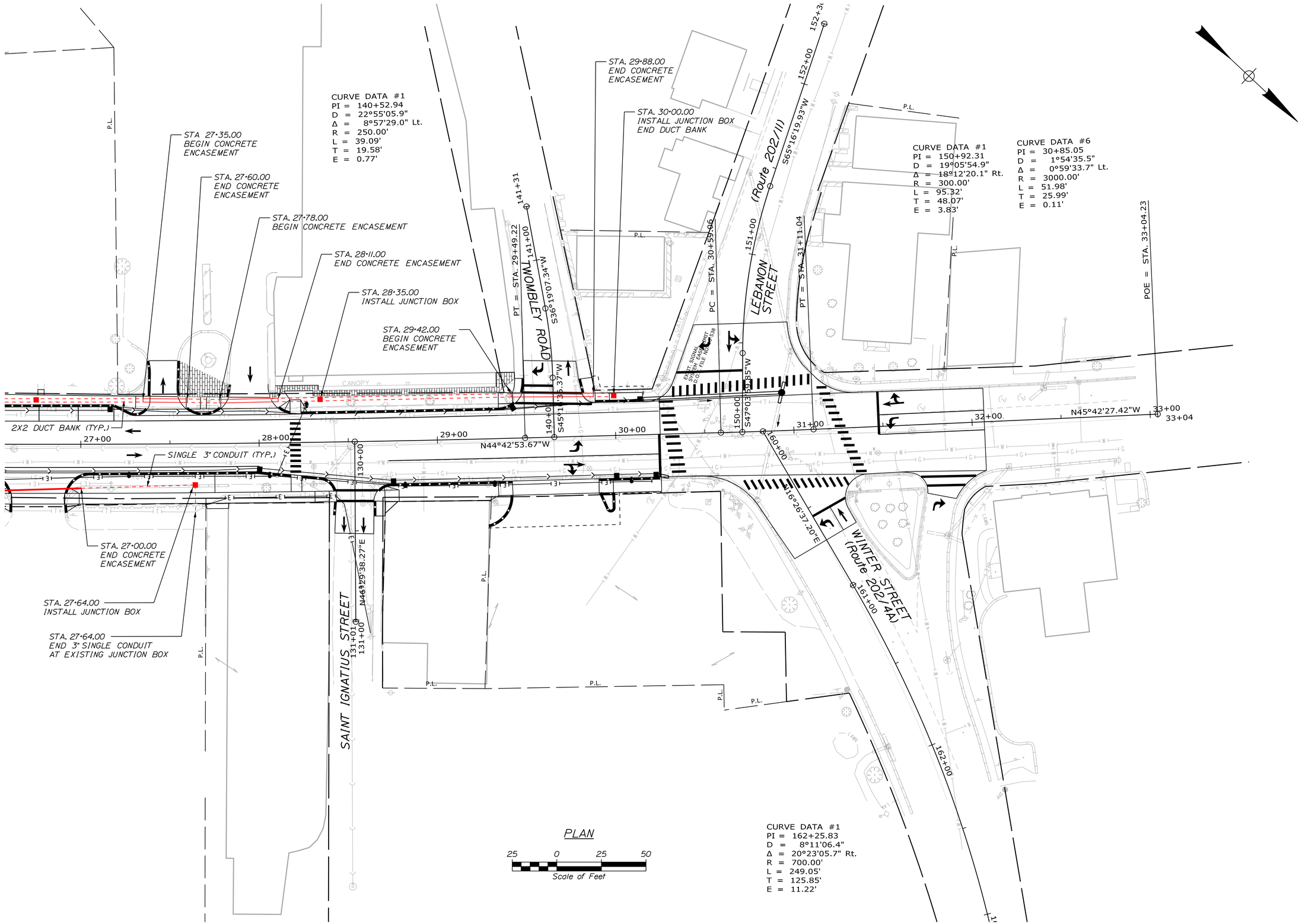

CURVE DATA #1
PI = 162+25.83
D = 8°11'06.4"
Δ = 20°23'05.7" Rt.
R = 700.00'
L = 249.05'
T = 125.85'
E = 11.22'

CITY OF SANFORD
SANFORDNET FIBER

vhb

PROJ. MANAGER	M. HILL		
		BY	DATE
DESIGN-DETAILED	BMD	CPN	8/19/2026
CHECKED-REVIEWED	DMP	ECF	8/19/2026
DESIGN2-DETAILED2			
DESIGN3-DETAILED3			
REVISIONS 1			
REVISIONS 2			
REVISIONS 3			
REVISIONS 4			
FIELD CHANGES			

SANFORD
SANFORDNET FIBER UNDERGROUND CONDUIT

GENERAL PLANS

SHEET NUMBER
C5
OF 5

Filename: ...\020_Plans_DuctBank.dgn Division: HIGHWAY Username: bdarrah Date:8/19/2026