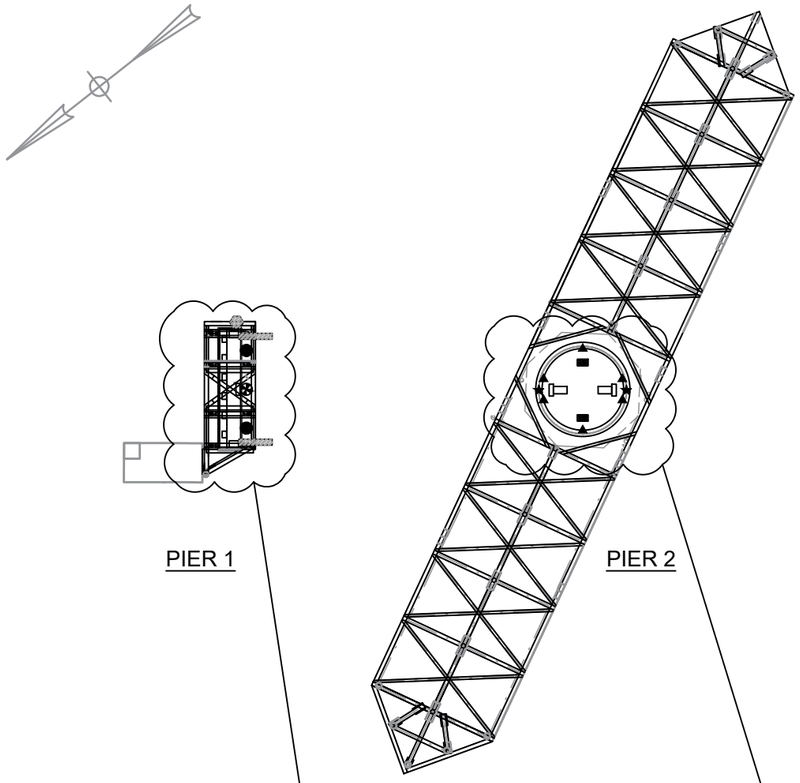

PLAN

Scale: N.T.S.

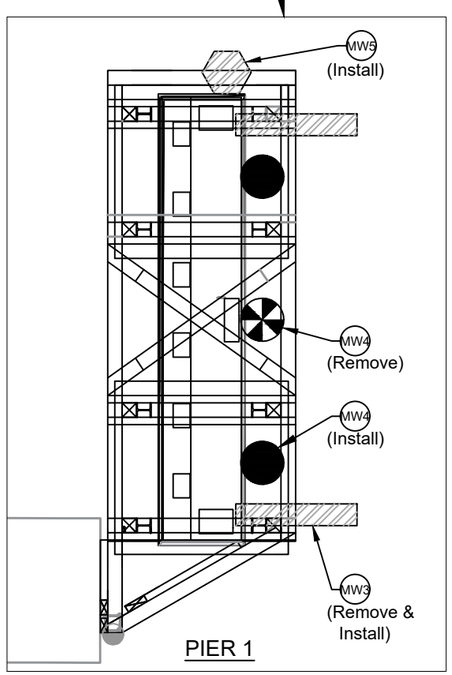

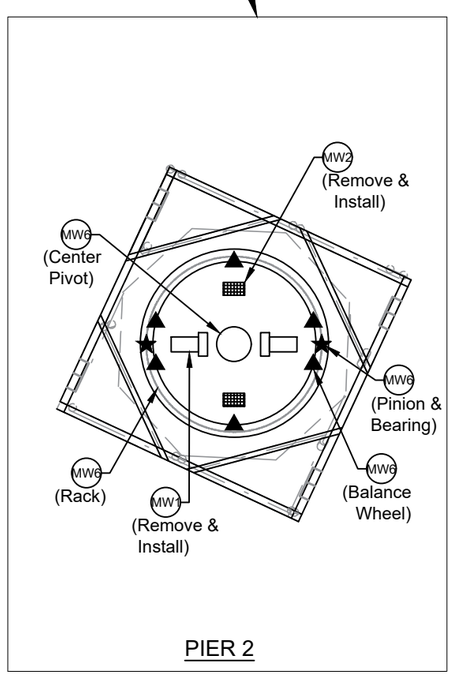

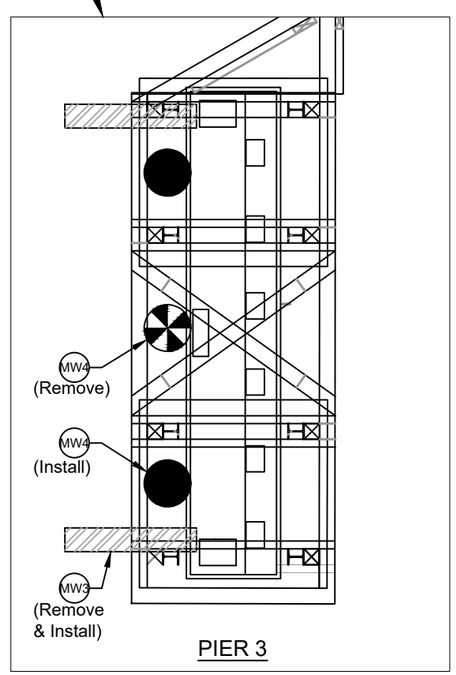

MECHANICAL WORK IDENTIFICATION SCHEDULE

MECH. WORK ITEM	SYMBOL(S)	QTY. REQ'D.		SYSTEM	DESCRIPTION (SEE SPECIAL PROVISIONS FOR ADDITIONAL INFORMATION)	REFERENCE SHEETS
		Remove	Install			
MW1		2	2	Span Drive Machinery	Remove existing motor and brakes. Install new motor and brakes.	M1, M2, M3, M17, M18
MW2		2	2	Center Wedge Machinery	Remove existing center wedge system. Furnish and install new live load roller assemblies.	M1, M2, M4, M19, M21, M22
MW3		4	4	End Seat Machinery	Remove existing end wedge machinery system. Furnish and install new end seat machinery system.	M1, M2, M5, M20, M21, M22
MW4		2	4	End Jack Machinery	Remove existing end jack system. Furnish and install new end jack machinery system.	M1, M2, M6, M22
MW5		0	1	End Stops	Furnish and install new end stop.	See Struct. Dwgs. (Sheet 25)
MW6		N/A	N/A	Miscellaneous Repairs	Replace pinion bearing cap bolts. Clean and lubricate other mechanical components.	M1, M2, M16, M18, M23, M24

GRESHAM CONSULTING
MOVABLE STRUCTURES ENGINEERS
25 SKUNK HOLLOW ROAD
CHALFONT, PA 18914
www.greshamconsulting.com
(215)997-0645

STATE OF MAINE
DEPARTMENT OF TRANSPORTATION

STP-2175(100)

WIN 21751.00

BRIDGE NO. 2789

BRIDGE PLANS

STATE OF MAINE
TIMOTHY C. GRESHAM
16735
PROFESSIONAL ENGINEER

PROJ. MANAGER	J. STETSON, PE		
DESIGN-DETAILED		E. CANZA	06-28-22
CHECKED-REVIEWED			
DESIGN2-DETAILED2			
DESIGN3-DETAILED3			
REVISIONS 1			
REVISIONS 2			
REVISIONS 3			
REVISIONS 4			
FINAL CHANGES			

DESIGN2-DETAILED2

P.E. NUMBER 16735

DATE 08-19-2022

SOUTHPORT BRIDGE ROUTE 27
OVER TOWNSEND GUT
SOUTHPORT & BOOTHBAY HARBOR ME LINCOLN COUNTY

MECHANICAL WORK IDENTIFICATION

SHEET NUMBER

M1

M1 OF M24

SWING SPAN MACHINERY GENERAL NOTES
(SHEETS M1 THROUGH M16)

1. All demolition of existing machinery shall be done in a careful and deliberate manner. Any damage to existing materials, equipment, components or hardware that are intended to remain in service at the completion of the project shall be repaired by the Contractor to the satisfaction of the Department, at no additional cost.
2. All new machinery is designed in accordance with the AASHTO LRFD Movable Highway Bridge Design Specifications, 2nd Edition 2007 with Interim Revisions, except as otherwise noted.
3. All dimensions shown on the machinery drawings are in inches and all surface finishes are in microinches unless otherwise noted.
4. All dimensions shown on the machinery drawings are nominal and shall be coordinated with all other drawings as required to provide a functional system.
5. The Contractor shall provide shop drawings for all components. Shop drawings shall dimension all parts with the appropriate tolerances to obtain the required fits between mating parts. Except as otherwise noted on the drawings, fits and finishes shall comply with the AASHTO Specifications.
6. See Special Provisions for additional details, information and requirements related to the work indicated on these Plans.
7. All layout dimensions are references to ambient temperature at 70° F and shall be compensated for the temperature variations greater than 5° F.
8. Coordinate all Mechanical work with Structural and Electrical interfaces as required to ensure proper fit-up and to provide functional systems.
9. The mechanical machinery systems provided under this contract shall be installed to start, move, hold and seat the swing span in a smooth and controlled manner with no unusual noise, vibration, or impact to the satisfaction of the Department. Any adjustment necessary to satisfy this requirement shall be made at no additional cost to the Department.
10. The Center Wedge Machinery (MW2), End Seat Machinery(MW3) and End Jack Machinery (MW4) have common/shared mechanical and hydraulic components. These include but are not limited to hydraulic controls, hydraulic power units, hydraulic actuators, mechanical cranks, shafts, bearings and associated supports and mounting hardware. Each of these existing systems is to be removed in their entirety. See the Special Provisions and other Contract Plans for additional information.
11. See Mechanical Special Provisions Section 860 for information related to End Stop material and installation requirements. See Structural Sheet titled "Pier No. 1 Concrete Patch Repair Details" for End Stop mounting location. See Structural Sheet titled "End Stop Details" for End Stop fabrication details.
12. See Mechanical Special Provisions Section 880 for information related to Span Balancing. The Contractor shall maintain safe control and balance of the swing span at all times during the construction. The Contractor is particularly alerted to the need to provide interim span balancing to account for the temporary stringers. See Structural Sheet titled "Truss Swing Span Plan and Typical Section" for stringer locations and sizes.
13. All existing machinery systems and components to be removed shall be removed by and become the property of the Contractor. Some of the existing components and their supporting members may be coated with a lead-based paint system. The Contractor is responsible for the containment, proper management and disposal of all lead contaminated hazardous waste generated by performing the work. The Contractor is responsible for implementing appropriate OSHA mandated personal protection standards related to this work. Once the existing machinery components are removed, the Contractor is solely responsible for the care, custody and control of the components and any hazardous waste generated as a result of the storage, recycling or disposal of them. Payment for all labor, materials, equipment and other costs required to remove and dispose of these materials shall be considered incidental to the work and other Pay Items.

MECHANICAL DRAWING LIST

Sheet No.	Sheet Title
M1	Mechanical Work Identification
M2	Mechanical General Notes
M3	Span Drive Machinery Demolition
M4	Center Wedge Machinery Demolition
M5	End Wedge Machinery Demolition
M6	End Jack Machinery Demolition
M7	New Span Drive Machinery Arrangement
M8	New Span Drive Machinery Details
M9	New Center Pier Live Load Rollers
M10	Live Load Roller Details
M11	New End Seat and End Jack Machinery Schedule and Arrangement
M12	New End Seat Machinery Assembly
M13	New End Seat Machinery Details-1
M14	New End Seat Machinery Details-2
M15	New End Jack Machinery Details
M16	Miscellaneous Repairs
M17	Original 1939 Machinery Reference Drawing
M18	Rehabilitated 1985 Span Drive Machinery Reference Drawing
M19	Rehabilitated 1985 Center Wedge Machinery Reference Drawing
M20	Rehabilitated 1985 End Wedge Machinery Reference Drawing
M21	Rehabilitated 1985 End Wedge and Center Wedge Shaft Assemblies Reference Drawing
M22	2015 End Wedge, Center Wedge and End Jack Hydraulic System Reference Drawing
M23	Existing Center (Pivot) Girder Details Reference Drawing
M24	Existing Truss Details Reference Drawing

GRESHAM CONSULTING
MOVABLE STRUCTURES ENGINEERS
25 SKUNK HOLLOW ROAD
CHALFONT, PA 18914
www.greshamconsulting.com
(215)997-0645

STATE OF MAINE
DEPARTMENT OF TRANSPORTATION

STP-2175(100)

WIN 21751.00

BRIDGE NO. 2789

BRIDGE PLANS

STATE OF MAINE
TIMOTHY C. GRESHAM
16735
PROFESSIONAL ENGINEER

PROJ. MANAGER	J. STETSON, PE		
DESIGN-DETAILED	N. CALVARIO	05-24-22	
CHECKED-REVIEWED			
DESIGN2-DETAILED2			
DESIGN3-DETAILED3			
REVISIONS 1			
REVISIONS 2			
REVISIONS 3			
REVISIONS 4			
FIELD CHANGES			

DESIGN2-DETAILED2
16735
P.E. NUMBER
08-19-2022
DATE

SOUTHPORT BRIDGE ROUTE 27
OVER TOWNSEND GUT
SOUTHPORT & BOOTHBAY HARBOR ME LINCOLN COUNTY

MECHANICAL GENERAL NOTES

SHEET NUMBER
M2
M2 OF M24

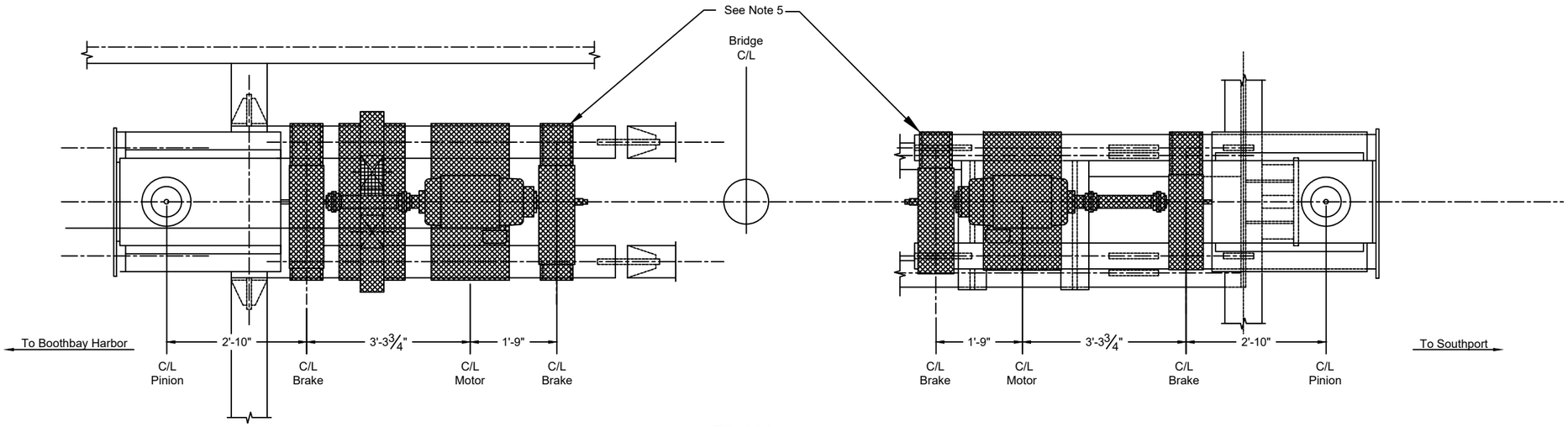

PLAN

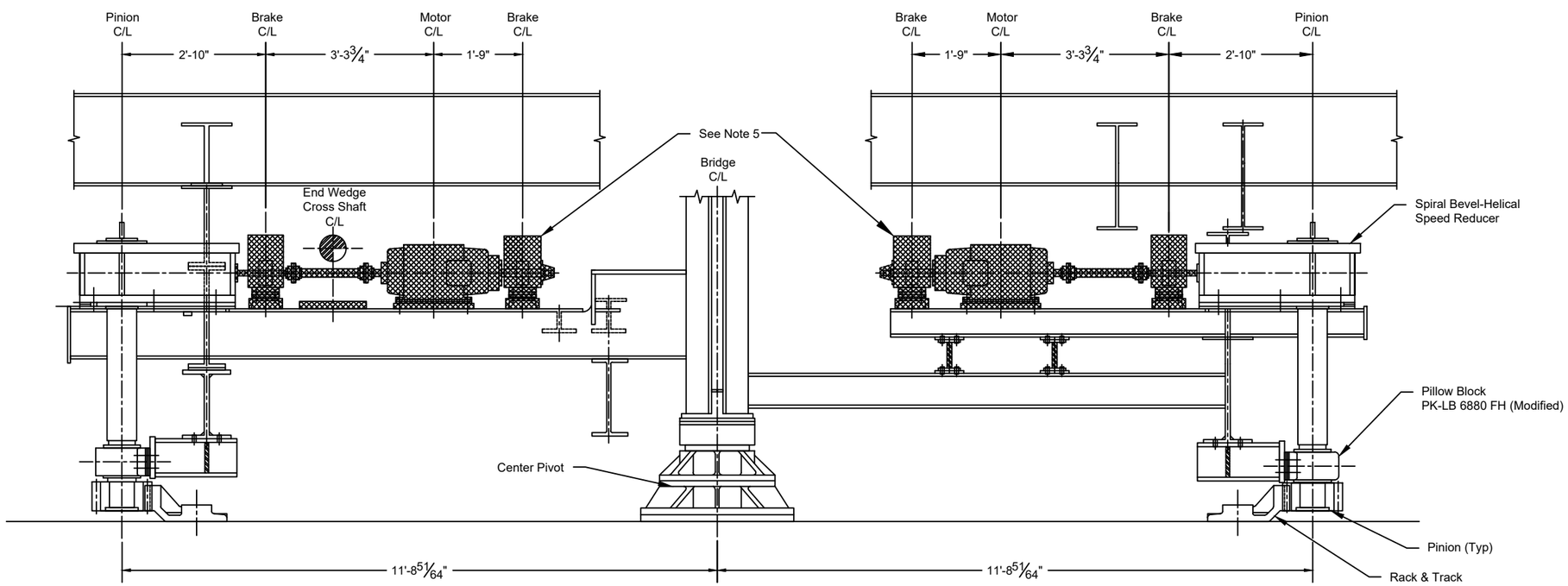

ELEVATION

= To Be Removed

SHEET NOTES

1. All demolition of existing machinery shall be done in a careful and deliberate manner. any damage to existing materials, equipment, components or hardware that are intended to remain in service at the completion of the project shall be repaired by the Contractor to the satisfaction of the Department at no additional cost.
2. See Sheet M1 for identification of work item locations. See Sheet M2 for General Notes applicable to work.
5. See Sheets M17 and M18 for additional information related to the existing Span Drive machinery. The Contractor is alerted to the fact that the information on those sheets has not been verified in detail and is provided for reference only.
6. Remove all brakes, motors, shafts, couplings and their mounting steel. This includes all appurtenances such as brake wheels, covers and mounting hardware.

GRESHAM CONSULTING
MOVABLE STRUCTURES ENGINEERS
25 SKUNK HOLLOW ROAD
CHALFONT, PA 18914
www.greshamconsulting.com
(215)997-0645

STATE OF MAINE
DEPARTMENT OF TRANSPORTATION

STP-2175(100)

BRIDGE NO. 2789

WIN 21751.00

BRIDGE PLANS

STATE OF MAINE TIMOTHY C. GRESHAM 16735 PROFESSIONAL ENGINEER

PROJ. MANAGER	J. STETSON, PE	BY	DATE
DESIGN-DETAILED		N. CALVARD	05-24-22
CHECKED-REVIEWED			
DESIGN2-DETAILED2			
DESIGN3-DETAILED3			
REVISIONS 1			
REVISIONS 2			
REVISIONS 3			
REVISIONS 4			
FIELD CHANGES			

DESIGN2-DETAILED2 16735 P.E. NUMBER 08-19-2022 DATE

SOUTHPORT BRIDGE ROUTE 27
OVER TOWNSEND GUT
SOUTHPORT & BOOTHBAY HARBOR ME LINCOLN COUNTY

SPAN DRIVE
MACHINERY DEMOLITION

SHEET NUMBER

M3

M3 OF M24

P1 CENTER WEDGE ASSEMBLY

P4 WEDGE AND JACK HPU

P2 CENTER WEDGE SHAFT ASSEMBLY

P5 CENTER WEDGE ACTUATOR & CONTROLS

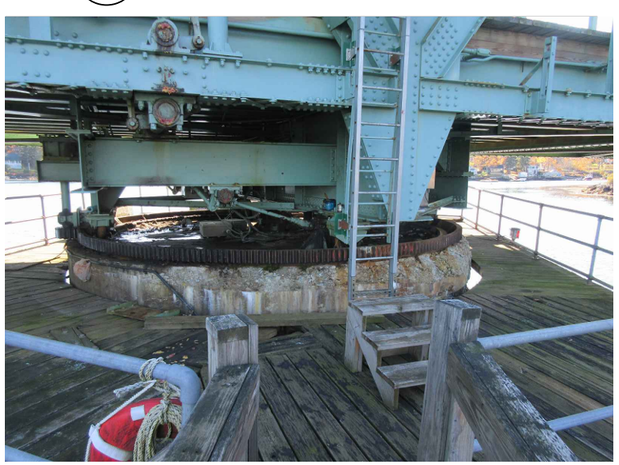

P3 CENTER WEDGE SHAFT & LINKAGE

P6 WEDGE AND JACK CONTROLS

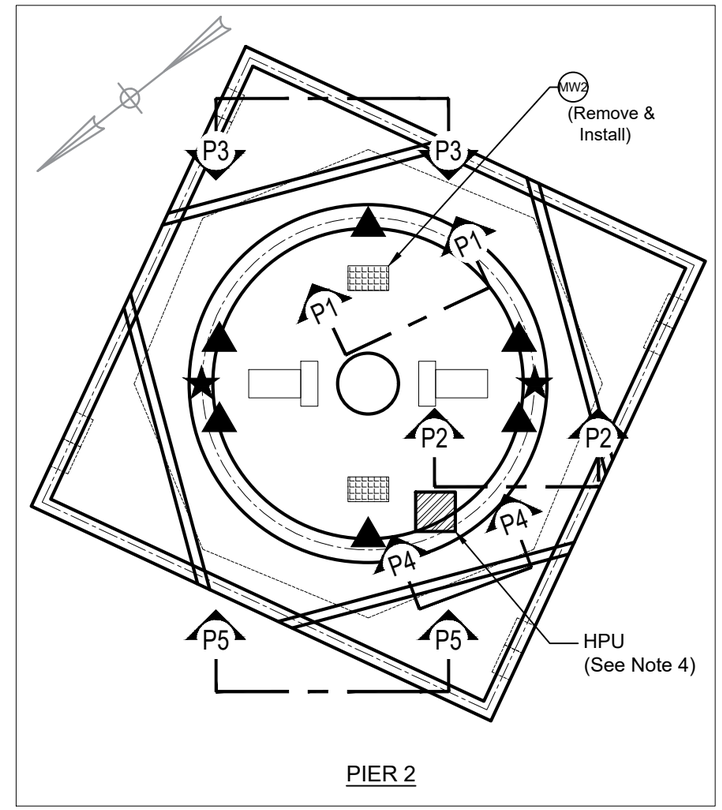

PIER 2

SHEET NOTES

1. All demolition of existing Center Wedge machinery shall be done in a careful and deliberate manner. Any damage to existing materials, equipment, components or hardware that are intended to remain in service at the completion of the project shall be repaired by the Contractor to the satisfaction of the Department at no additional cost.
2. See Sheet M2 for General Notes applicable to work.
3. Remove the Center Wedge machinery in its entirety including all wedges, guides, seats, rods, links, turnbuckles, cranks, shafts, couplings, and bearings. Also included is all associated hydraulic system components including but not limited to the HPU (hydraulic power unit), actuating cylinders, piping, hoses, supports and all related appurtenances and hardware.
4. The Hydraulic Power Unit (HPU) and Hydraulic Control System are common to all wedge and jack systems. Photo 4 is of the HPU and. Photo 5 is of the local Controls and Hydraulic Actuators. These provide operation of the center wedges, end wedges and end jacks.
5. See Sheets M19, M21 and M22 for additional information related to the existing Center Wedge machinery. The Contractor is alerted to the fact that the information on those sheets has not been verified in detail and is provided for reference only.
6. In addition to the locations alongside and beneath the bridge, there are Wedge and Jack Controls located in the control house above the roadway, some of which are shown in Photo 6.
7. Cut existing center wedge pedestal anchors off 1-1/2" below top of pier and fill excavated area with approved epoxy grout. Epoxy grout shall be made smooth with top of pier and not interfere with installation of new Live Load Roller assemblies.

GRESHAM CONSULTING
MOVABLE STRUCTURES ENGINEERS
25 SKUNK HOLLOW ROAD
CHALFONT, PA 18914
www.greshamconsulting.com
(215)997-0645

STATE OF MAINE
DEPARTMENT OF TRANSPORTATION

STP-2175(100)

BRIDGE NO. 2789 | WIN 21751.00 | BRIDGE PLANS

STATE OF MAINE
TIMOTHY C. GRESHAM
16735
PROFESSIONAL ENGINEER

PROJ. MANAGER	J. STETSON, PE		
DESIGN-DETAILED	L. SUPLANAS	BY	DATE
CHECKED-REVIEWED			
DESIGN2-DETAILED2			
DESIGN3-DETAILED3			
REVISIONS 1			
REVISIONS 2			
REVISIONS 3			
REVISIONS 4			
FEAD-CHANGES			

DESIGN2-DETAILED2 07-04-22

16735 P.E. NUMBER

08-19-2022 DATE

SOUTHPORT BRIDGE ROUTE 27
OVER TOWNSEND GUT
SOUTHPORT & BOOTHBAY HARBOR ME LINCOLN COUNTY

CENTER WEDGE
MACHINERY DEMOLITION

SHEET NUMBER

M4

M4 OF M24

P1 END WEDGE ASSEMBLY

P2 END WEDGE SHAFT ASSEMBLY

P3 END WEDGE ACTUATOR & CONTROLS

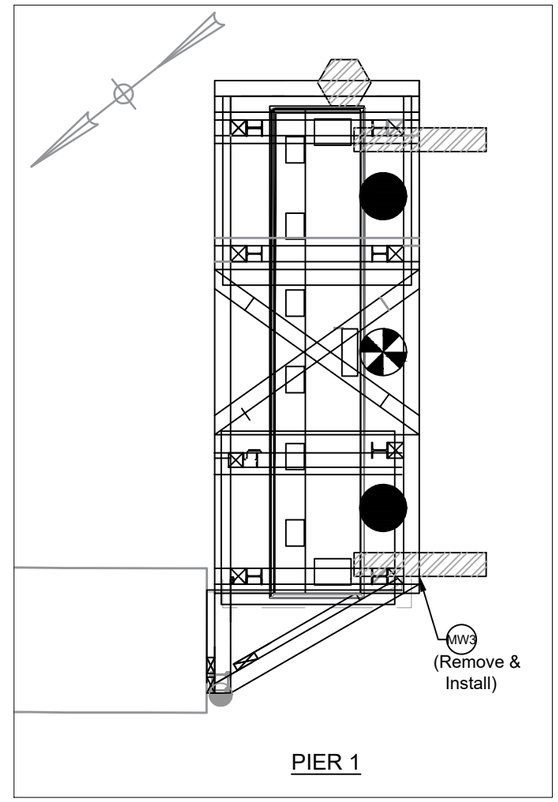

PIER 1

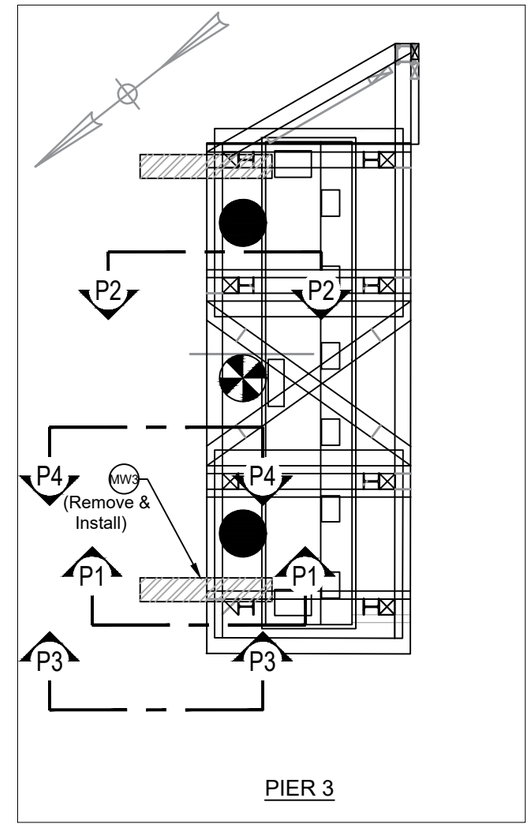

PIER 3

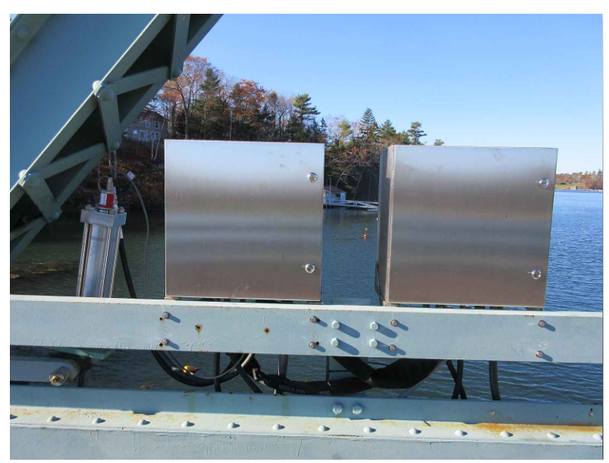

P4 END WEDGE ACTUATOR & CONTROLS

SHEET NOTES

1. All demolition of existing End Wedge machinery shall be done in a careful and deliberate manner. Any damage to existing materials, equipment, components or hardware that are intended to remain in service at the completion of the project shall be repaired by the Contractor to the satisfaction of the Department at no additional cost.
2. See Sheet M2 for General Notes applicable to work.
3. Remove the End Wedge machinery in its entirety including all wedges, guides, seats, rods, links, turnbuckles, cranks, shafts, couplings, and bearings. Also included is all associated hydraulic system components including but not limited to the HPU (hydraulic power unit), actuating cylinders, piping, hoses, supports and all related appurtenances and hardware.
4. See Sheets M20, M21 and M22 for additional information related to the existing End Wedge machinery. The Contractor is alerted to the fact that the information on those sheets has not been verified in detail and is provided for reference only.
5. Cut existing end wedge pedestal anchors off 1-1/2" below top of pier and fill excavated area with approved epoxy grout. Epoxy grout shall be made smooth with top of pier and not interfere with installation of new End Seat Assemblies.

GRESHAM CONSULTING
MOVABLE STRUCTURES ENGINEERS
25 SKUNK HOLLOW ROAD
CHALFONT, PA 18914
www.greshamconsulting.com
(215)997-0645

STATE OF MAINE
DEPARTMENT OF TRANSPORTATION

STP-2175(100)

BRIDGE NO. 2789

WIN 21751.00

BRIDGE PLANS

STATE OF MAINE TIMOTHY C. GRESHAM 16735 PROFESSIONAL ENGINEER

PROJ. MANAGER			
DESIGN-DETAILED	J. STETSON, PE	BY	DATE
CHECKED-REVIEWED			
DESIGN2-DETAILED2	J. SUPLINAS	07-04-22	
DESIGN3-DETAILED3			
REVISIONS 1			
REVISIONS 2			
REVISIONS 3			
REVISIONS 4			
FIELD CHANGES			

DESIGN2-DETAILED2
16735
P.E. NUMBER
08-19-2022
DATE

SOUTHPORT BRIDGE ROUTE 27
OVER TOWNSEND GUT
SOUTHPORT & BOOTHBAY HARBOR ME LINCOLN COUNTY

END WEDGE
MACHINERY DEMOLITION

SHEET NUMBER

M5

M5 OF M24

P1 END JACK ASSEMBLY

P2 END JACK ASSEMBLY

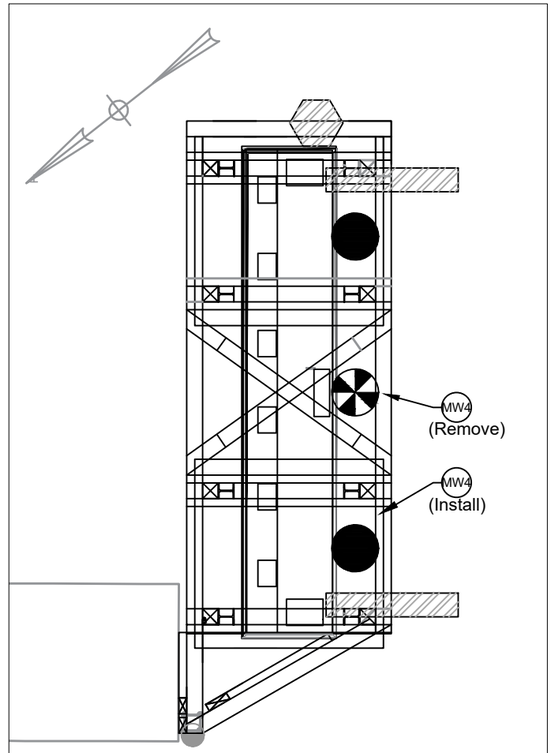

PIER 1

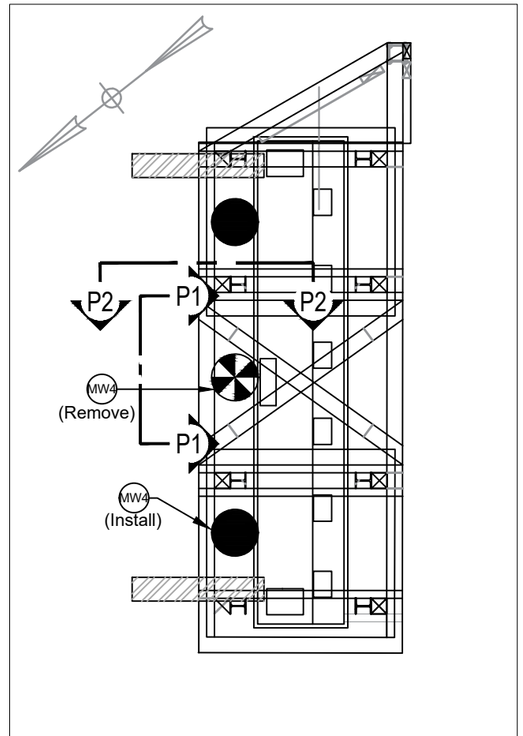

PIER 3

SHEET NOTES

1. All demolition of existing End Jack machinery shall be done in a careful and deliberate manner. Any damage to existing materials, equipment, components or hardware that are intended to remain in service at the completion of the project shall be repaired by the Contractor to the satisfaction of the Department at no additional cost.
2. See Sheet M2 for General Notes applicable to work.
3. The exisiting End Jack cylinders and their support steel are mounted to Stringers S5 and S6 at each end of the swing span. See Structural Drawing Sheet 31 for the location of Stringers S5 and S6.
4. Remove the End Jack machinery in its entirety including all jack cylinders, and their supporting steel below Stringers S5 and S6. Also remove all associated hydraulic system components including but not limited to the HPU (hydraulic power unit), piping, hoses, supports and all related appurtenances and hardware.
5. No existing End Jack machinery drawings are available. There is one End Jack located at each end of the swing span (two End Jacks total). The End Jacks are operated by the same hydraulic system as that used for control and operation of the Center Wedges and End Wedges. See Sheet M22 for hydraulic system schematic.
6. Cut existing end jack strike plate anchors off 1-1/2" below top of pier and fill excavated area with approved epoxy grout. Epoxy grout shall be made smooth with top of pier.

GRESHAM CONSULTING
MOVABLE STRUCTURES ENGINEERS
25 SKUNK HOLLOW ROAD
CHALFONT, PA 18914
www.greshamconsulting.com
(215)997-0645

STATE OF MAINE
DEPARTMENT OF TRANSPORTATION

STP-2175(100)

BRIDGE NO. 2789

WIN 21751.00

BRIDGE PLANS

STATE OF MAINE TIMOTHY C. GRESHAM 16735 PROFESSIONAL ENGINEER

PROJ. MANAGER	J. STETSON, PE		
DESIGN-DETAILED	J. SUPILANAS	07-04-22	DESIGN2-DETAILED2
CHECKED-REVIEWED			16735
DESIGN2-DETAILED2			P.E. NUMBER
DESIGN3-DETAILED3			08-19-2022
REVISIONS 1			DATE
REVISIONS 2			
REVISIONS 3			
REVISIONS 4			
FINAL CHANGES			

SOUTHPORT BRIDGE ROUTE 27
OVER TOWNSEND GUT
SOUTHPORT & BOOTHBAY HARBOR ME LINCOLN COUNTY

END JACK
MACHINERY DEMOLITION

SHEET NUMBER

M6

M6 OF M24

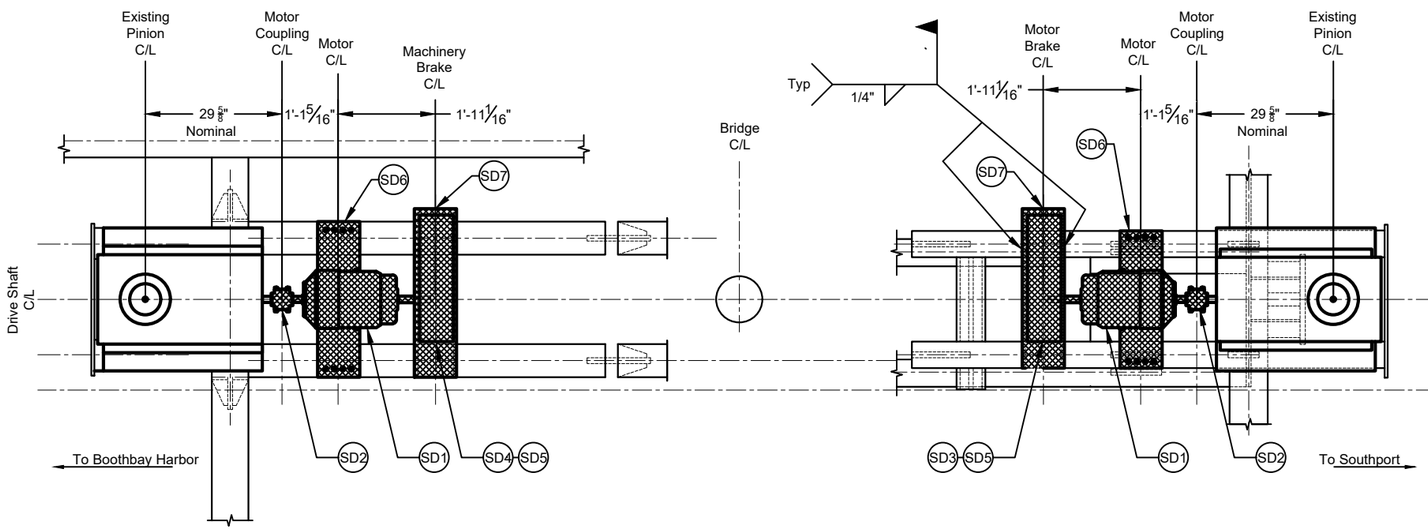

PLAN

Scale: N.T.S.

SPAN DRIVE MACHINERY SCHEDULE

MARK NO.	QTY REQ'D	COMPONENT	DESCRIPTIONS (SEE SPECIAL PROVISIONS FOR ADDITIONAL INFORMATION)	REFERENCE SHEETS
SD1	2	Span Drive Motor	7.5 hp @ 900 rpm electric motor, 256T frame, NEMA D design. Rear motor shaft to extend through 5" brakewheel to provide hex shaped lug for manual operation.	M7, M8
SD2	2	Motor Coupling	Double engsagement grid coupling with horizontally split cover. Minimum rating 3,850 lb-in.	M7, M8
SD3	1	Motor Brake	Thrustor operated, spring set drum brake. 5" brakewheel. Set torque to 30 ft-lb. 0.75 to 1.5 second time delay on set.	M7, M8
SD4	1	Machinery Brake	Thrustor operated, spring set drum brake. 5" brakewheel. Set torque to 40 ft-lb. 2.25 to 3 second time delay on set.	M7, M8
SD5	2	Brake Cover	NEMA 3R stainless steel removable enclosure with vertical split.	M7, M8
SD6	8	Motor Support	Steel Plate: ASTM A709 Grade 50. (Boothbay = 1-14" Southport = 2")	M7, M8
SD7	8	Brake Support	Steel Channel: MC13x50 ASTM A36 (cut flanges per Sheet M8)	M7, M8
RP	8	Cap Bolt	Per manufacturer recommendation (See Note 8)	M7, M16

SHEET NOTES

1. See Sheet M2 for General Notes applicable to work.
2. Distance from centerline of existing pinion to centerline of Motor Coupling SD2 based on available existing drawings. Contractor to confirm dimensions and provide adjustments to locations of components and their supports to suit.
3. Provide nominal shims as called for under Items SD1, SD3 and SD4.
4. All fasteners, hardware shims, etc. which are not explicitly identified in the schedule but are required to produce completed assemblies and provide a functional system are incidental to this work and shall be provided as past of this work at no additional cost.
5. Motor rear shaft extension is special order. See Sheet M8 for details.
6. Brake Supports SD7 to have flanges cut. See Sheet M8 for details.
7. Brake manual release handles shall be located on the side of the brake away from the span drive motor.
8. Cap bolt material, size and tolerances to be per bearing manufacturer recommendation. Submit to Department for review and approval.

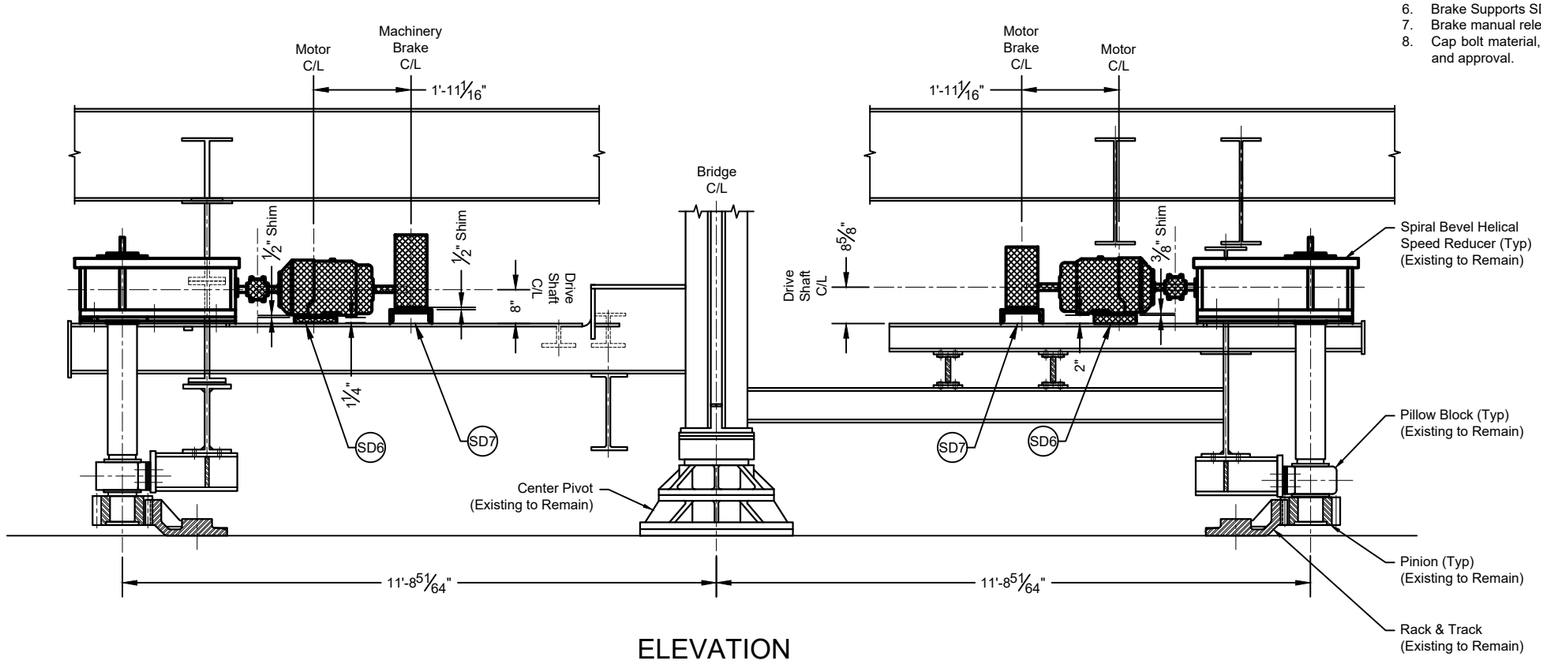

ELEVATION

Scale: N.T.S.

= To Be Installed

GRESHAM CONSULTING
MOVABLE STRUCTURES ENGINEERS
25 SKUNK HOLLOW ROAD
CHALFONT, PA 18914
www.greshamconsulting.com
(215)997-0645

STATE OF MAINE
DEPARTMENT OF TRANSPORTATION

STP-2175(100)

WIN 21751.00

BRIDGE PLANS

BRIDGE NO. 2789

STATE OF MAINE TIMOTHY C. GREENHALL 16735 PROFESSIONAL ENGINEER

PROJ. MANAGER J. STETSON, PE		
DESIGN-DETAILED	J. SIPILANAS	07-04-22
CHECKED-REVIEWED		
DESIGN2-DETAILED2		
DESIGN3-DETAILED3		
REVISIONS 1		
REVISIONS 2		
REVISIONS 3		
REVISIONS 4		
FIELD CHANGES		

DESIGN2-DETAILED2
16735
P.E. NUMBER
08-19-2022
DATE

SOUTHPORT BRIDGE ROUTE 27
OVER TOWNSEND GUT
SOUTHPORT & BOOTHBAY HARBOR ME LINCOLN COUNTY

NEW SPAN DRIVE
MACHINERY ARRANGEMENT

SHEET NUMBER

M7

M7 OF M24

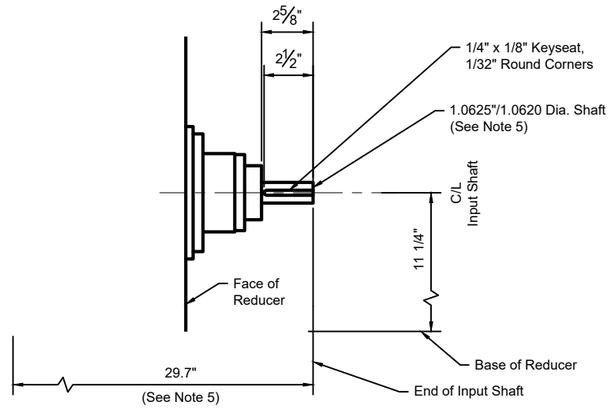

REDUCER INPUT SHAFT DETAIL

Scale: 3" = 1'-0"

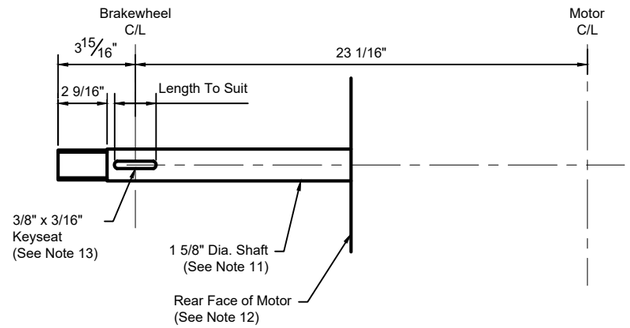

MOTOR REAR SHAFT EXTENSION

Scale: 3" = 1'-0"

SHEET NOTES

1. See Sheet M2 for notes applicable to work.
2. See Span Drive Machinery Schedule on Sheet M7 for materials and quantities.
3. All dimensions are finished dimensions unless otherwise noted. Add stock for fabrication as necessary to ensure complete cleanup of machined surfaces.
4. Perform field welding per AWS D1.5.
5. Reducer input shaft dimensions based on available existing drawings. Contractor to confirm dimensions to provide FN2 fit with bore of Motor Coupling SD2. Fit of key with keyseat shall be as called for on Sheet M2, Note 5.
6. For Motor Support SD6 and Brake Support SD7, locate supports to existing steel per assembly dimensions shown on Sheet M7. Supports shall provide for 1/2" shim or 3/8" shim under supported components as called for on Sheet M7.
7. Machine all mounting pads and surfaces which support machinery or contact structural steel to a 125 microinch finish.
8. Field install and align Span Drive Motor SD1 on Motor Support SD6 after bolting support to existing structural steel. Drill and ream SD1 for turned mounting bolts after final alignment has been approved by the Department.
9. Span Drive Motor SD1 front (drive) shaft is standard 256T Frame dimensions. Span Drive Motor SD1 rear shaft extension is special order to accommodate Motor Brake SD3 and Machinery Brake SD4 using an offset, straight bore, 5" brakewheel. Additionally, a minimum of 2-9/16" length of Span Drive Motor SD1 rear shaft extension to be machined to standard dimensions for accommodation of standard 1-5/16" hex head socket for manual operation.
10. Provide cover to protect rear shaft extensions when not in use. Provide limit switch to prevent power to Span Drive Motor SD1 when protective cover is not secure and in place.
11. Provide FN2 fit of brakewheel hubs on Span Drive Motor SD1 rear shaft extension.
12. Distance to rear face of Span Drive Motor SD1 is based on standard 256T Frame dimensions. It does not include space required for encoder. Contractor to coordinate final length of motor shaft to accommodate encoder and brake cover. Submit overhung load calculations to Department for review and approval prior to ordering Span Drive Motor SD1.
13. Keyseat to engage entire length of hub of offset brakewheel bore.

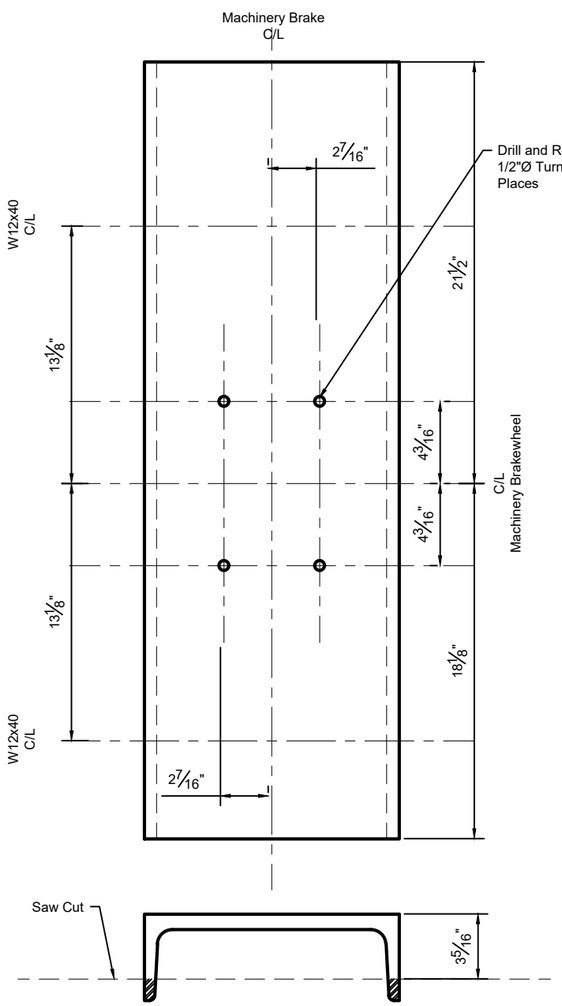

SD7 BRAKE MOUNT (BOOTHBAY)

Scale: 3" = 1'-0"

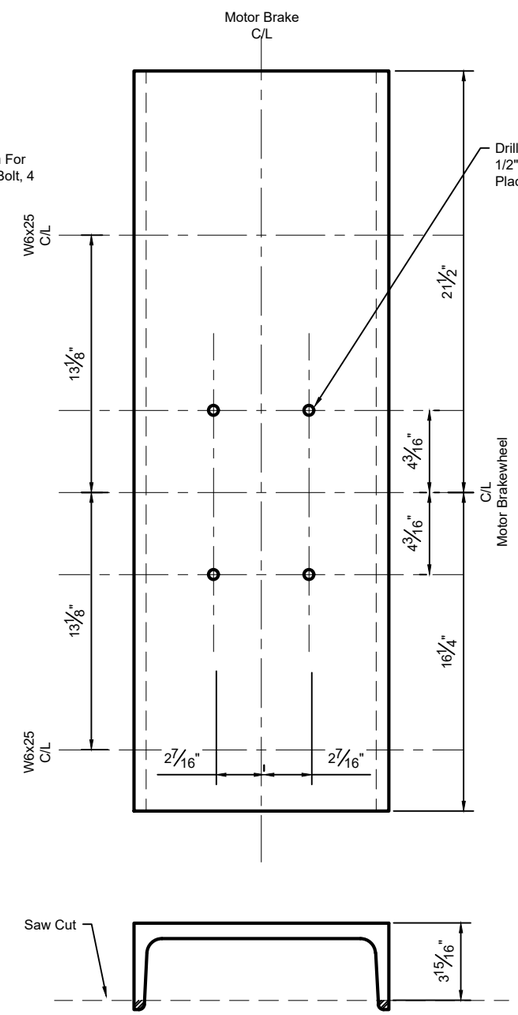

SD7 BRAKE MOUNT (SOUTHPORT)

Scale: 3" = 1'-0"

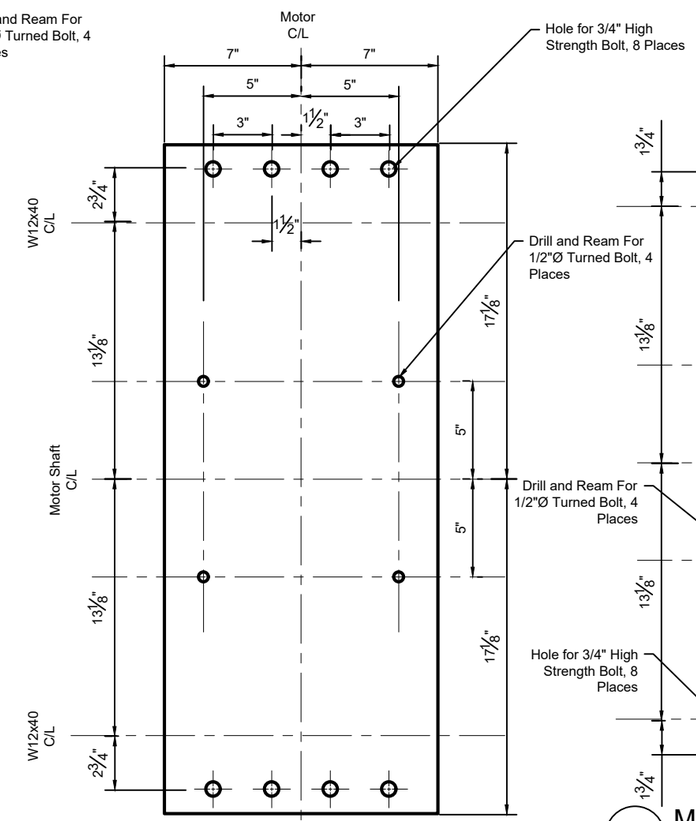

SD6 MOTOR SUPPORT (BOOTHBAY)

Scale: 3" = 1'-0"

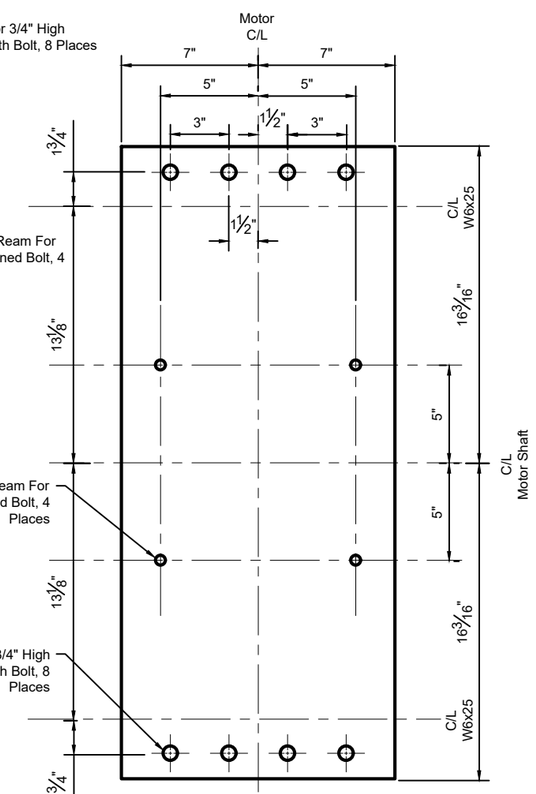

SD6 MOTOR SUPPORT (SOUTHPORT)

Scale: 3" = 1'-0"

GRESHAM CONSULTING
MOVABLE STRUCTURES ENGINEERS
25 SKUNK HOLLOW ROAD
CHALFONT, PA 18914
www.greshamconsulting.com
(215)997-0645

STATE OF MAINE
DEPARTMENT OF TRANSPORTATION

STP-2175(100)

BRIDGE NO. 2789

WIN 21751.00

BRIDGE PLANS

STATE OF MAINE TIMOTHY C. GRESHAM 16735 PROFESSIONAL ENGINEER

	BY	DATE
PROJ. MANAGER	J. STETSON, PE	
DESIGN-DETAILED	J. SIPILANAS	07-04-22
CHECKED-REVIEWED		
DESIGN2-DETAILED2		
DESIGN3-DETAILED3		
REVISIONS 1		
REVISIONS 2		
REVISIONS 3		
REVISIONS 4		
FIELD CHANGES		

DESIGN2-DETAILED2

16735 P.E. NUMBER

08-19-2022 DATE

SOUTHPORT BRIDGE ROUTE 27
OVER TOWNSEND GUT
SOUTHPORT & BOOTHBAY HARBOR ME LINCOLN COUNTY

NEW SPAN DRIVE
MACHINERY DETAILS

SHEET NUMBER

M8

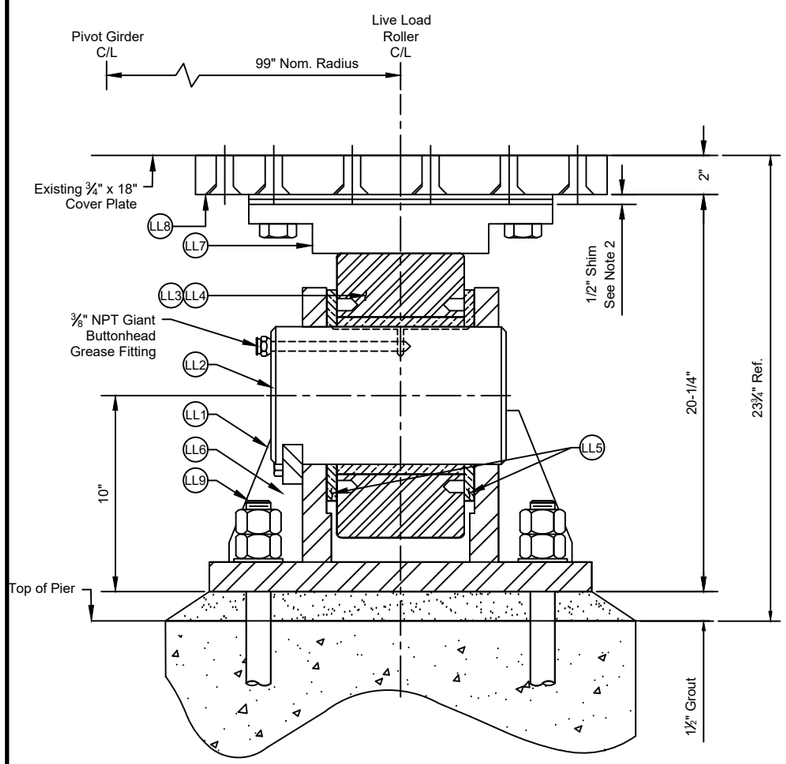

A SECTION

Scale: 3" = 1'-0"

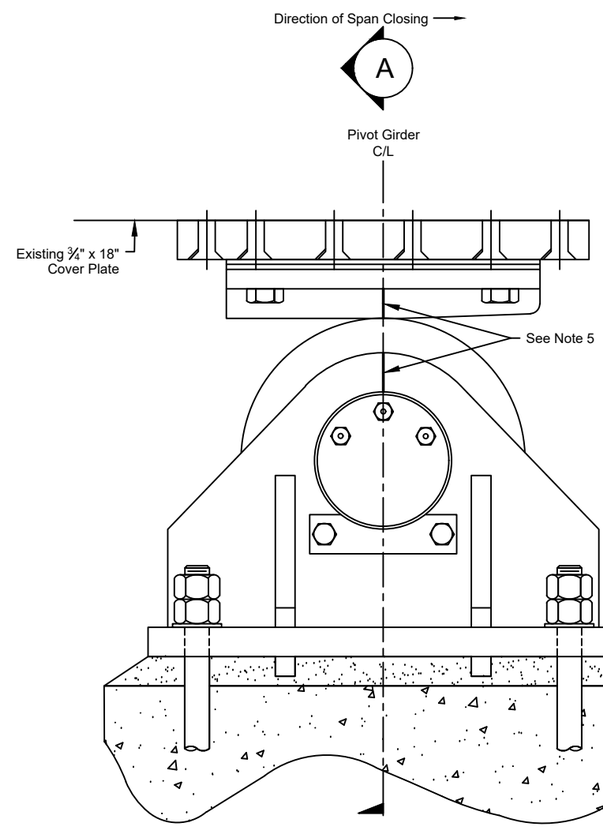

LIVE LOAD ROLLER ASSEMBLY

Scale: 3" = 1'-0"

LIVE LOAD ROLLER ASSEMBLY SCHEDULE

MARK NO.	QTY. REQ'D	COMPONENT	DESCRIPTION (SEE SPECIAL PROVISIONS FOR ADDITIONAL INFORMATION)	REFERENCE SHEETS
LL1	2	Live Load Clevis	Weldment. Material: ASTM A709 Grade 50.	M9, M10
LL2	2	Live Load Pin	Steel Forging. Material: ASTM A668 Class M.	M9
LL3	2	Live Load Bushing	Bronze. Material: ASTM B22 Alloy C91300.	M9
LL4	2	Live Load Roller	Steel Forging. Material: ASTM A668 Class M.	M9
LL5	4	Live Load Thrust Washer	Bronze. Material: ASTM B22 Alloy C93700.	M9, M10
LL6	2	Live Load Keeper Plate	Steel Plate. Material: ASTM A709 Grade 50.	M9, M10
LL7	2	Live Load Shoe	Steel Forging. Material: ASTM A668 Class L.	M9, M10
LL8	2	Live Load Fill Plate	Steel Plate. Material: ASTM A709 Grade 50.	M9, M10
LL9	8	Anchor Bolts	1.25" dia. x 12" embedment. Material: ASTM A193 Grade B7.	M9

SHEET NOTES

1. See Sheet M2 for General Notes applicable to the work.
2. Shim Live Load Shoes to provide firm contact with the Live Load Rollers with the bridge closed and resting on the End Seats.
3. Bore Bushing LL3 after assembly with Roller LL4.
4. Secure fill plate to pivot girder with hex socket flat countersunk head bolts. Tighten per Turn-of-Nut method. Recess bolt heads 1/8" deep to avoid interference with Live Load Shoe LL7 shims. See Reference Sheet M23 for existing pivot girder details.
5. Locate Clevis LL1 such that at the bridge fully closed position the scribe lines on the Clevis LL1 and Shoe LL7 align within 1/16". Grout into position and secure with Anchor Bolts LL9.

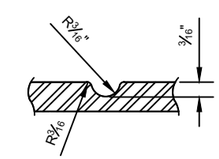

GREASE GROOVE DETAIL

Not to Scale

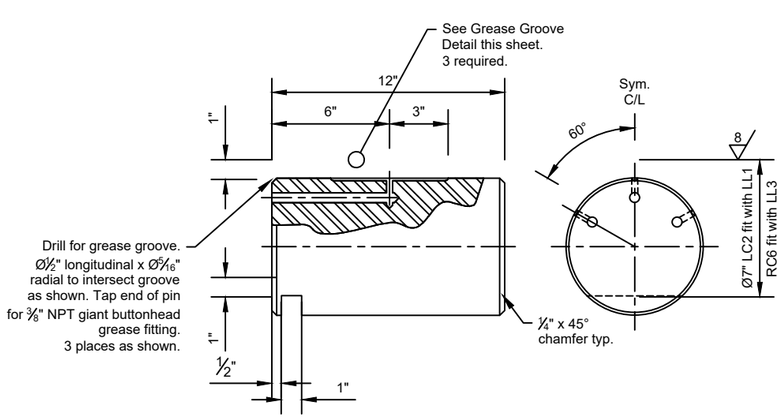

LL2 LIVE LOAD PIN

Scale: 3" = 1'-0"

Prove 125 microinch surface finish U.O.N.

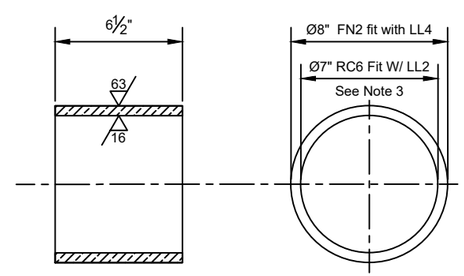

LL3 LIVE LOAD BUSHING

Scale: 3" = 1'-0"

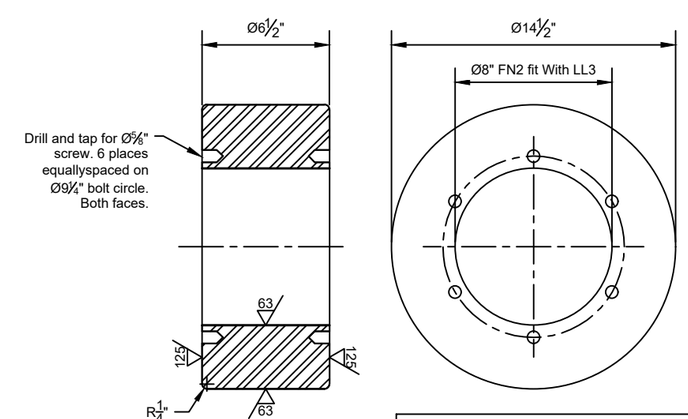

LL4 LIVE LOAD ROLLER

Scale: 3" = 1'-0"

GRESHAM CONSULTING
MOVABLE STRUCTURES ENGINEERS
25 SKUNK HOLLOW ROAD
CHALFONT, PA 18914
www.greshamconsulting.com
(215)997-0645

STATE OF MAINE
DEPARTMENT OF TRANSPORTATION

STP-2175(100)

WIN 21751.00

BRIDGE NO. 2789

BRIDGE PLANS

STATE OF MAINE TIMOTHY C. GREENHALL 16735 PROFESSIONAL ENGINEER

PROJ. MANAGER J. STETSON, PE	BY	DATE
DESIGN-DETAILED	MCARTICHAD	06-06-22
CHECKED-REVIEWED		
DESIGN2-DETAILED2		
DESIGN3-DETAILED3		
REVISIONS 1		
REVISIONS 2		
REVISIONS 3		
REVISIONS 4		
FIELD CHANGES		

DESIGN2-DETAILED2 16735 P.E. NUMBER 08-19-2022 DATE

SOUTHPORT BRIDGE ROUTE 27
OVER TOWNSEND GUT
SOUTHPORT & BOOTHBAY HARBOR ME LINCOLN COUNTY

NEW CENTER PIER
LIVE LOAD ROLLERS

SHEET NUMBER

M9

M9 OF M24

SHEET NOTES

1. See Sheet M2 for General Notes applicable to work.
2. See Live Load Roller Schedule on Sheet M9 for materials and quantities.
3. All dimensions are finished dimensions unless otherwise noted. Add stock for fabrication as necessary to ensure complete cleanup of machined surfaces.
4. Spot face all bolt holes as necessary to ensure full bearing of bolt head and nut on surface.
5. Live Load Clevis LL1 fabrication: Join webs and base plate with complete joint penetration groove welds. Mill stiffeners to bear and secure with fillet welds as shown. Seal all welds to prevent open joints.
6. Stress relieve weldment prior to machining.
7. Machine interior face of Clevis to provide 0.060" Clearance with Live Load Roller Thrust Washers LL5 at assembly.

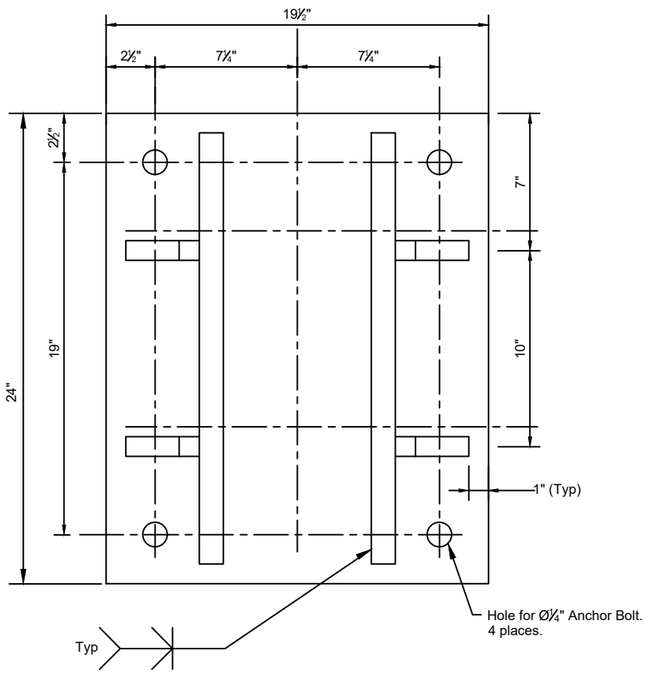

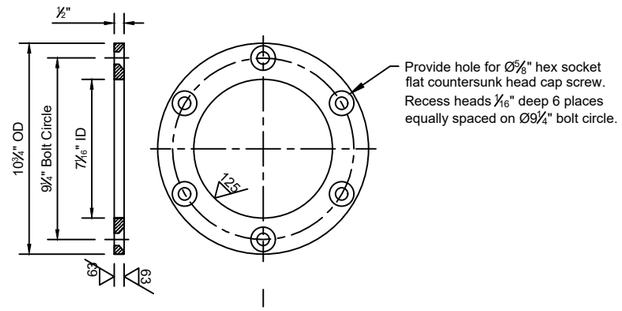

LL5 LIVE LOAD THRUST WASHER

Scale: 3" = 1'-0"

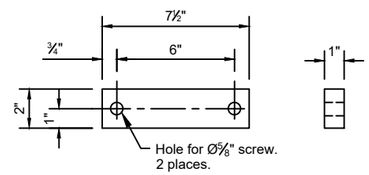

LL6 LIVE LOAD KEEPER PLATE

Scale: 3" = 1'-0"
Provide 125 Finish All Over U.O.N.

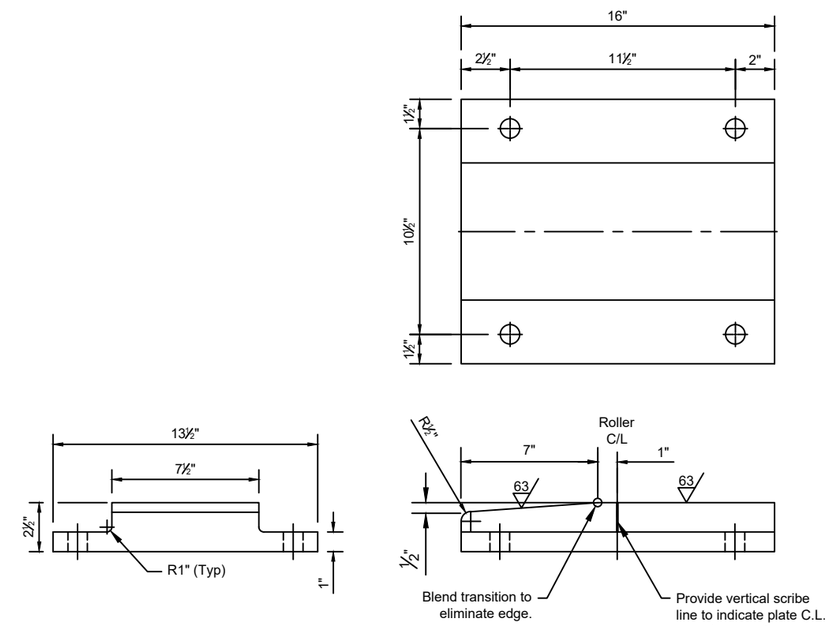

LL7 LIVE LOAD SHOE

Scale: 3" = 1'-0"
Provide 125 Finish All Over U.O.N.

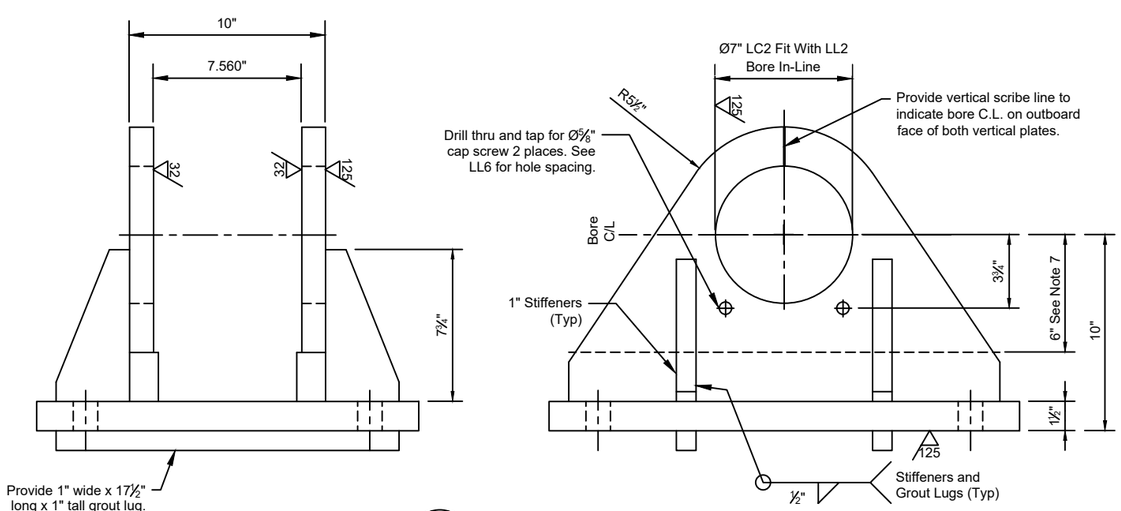

LL1 LIVE LOAD CLEVIS

Scale: 3" = 1'-0"
See Notes 5 & 6 for fabrication details.

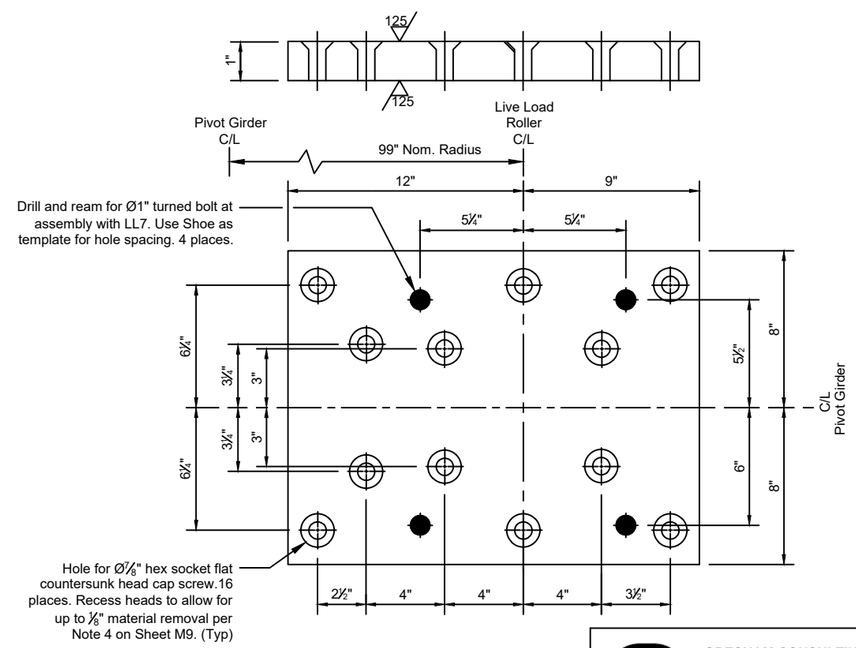

LL8 LIVE LOAD FILL PLATE

Scale: 3" = 1'-0"

GRESHAM CONSULTING
MOVABLE STRUCTURES ENGINEERS
25 SKUNK HOLLOW ROAD
CHALFONT, PA 18914
www.greshamconsulting.com
(215)997-0645

STATE OF MAINE
DEPARTMENT OF TRANSPORTATION

STP-2175(100)

WIN 21751.00

BRIDGE NO. 2789

BRIDGE PLANS

STATE OF MAINE TIMOTHY C. GREENHAW 16735 PROFESSIONAL ENGINEER

	BY	DATE
PROJ. MANAGER J. STETSON, PE		
DESIGN-DETAILED	N. CALVARIO	05-26-22
CHECKED-REVIEWED		
DESIGN2-DETAILED2	DESIGN2-DETAILED2	
DESIGN3-DETAILED3	16735	
REVISIONS 1	P.E. NUMBER	
REVISIONS 2		
REVISIONS 3	08-19-2022	
REVISIONS 4	DATE	
FINAL CHANGES		

SOUTHPORT BRIDGE ROUTE 27
OVER TOWNSEND GUT
SOUTHPORT & BOOTHBAY HARBOR ME LINCOLN COUNTY

LIVE LOAD ROLLER DETAILS

SHEET NUMBER

M10

M10 OF M24

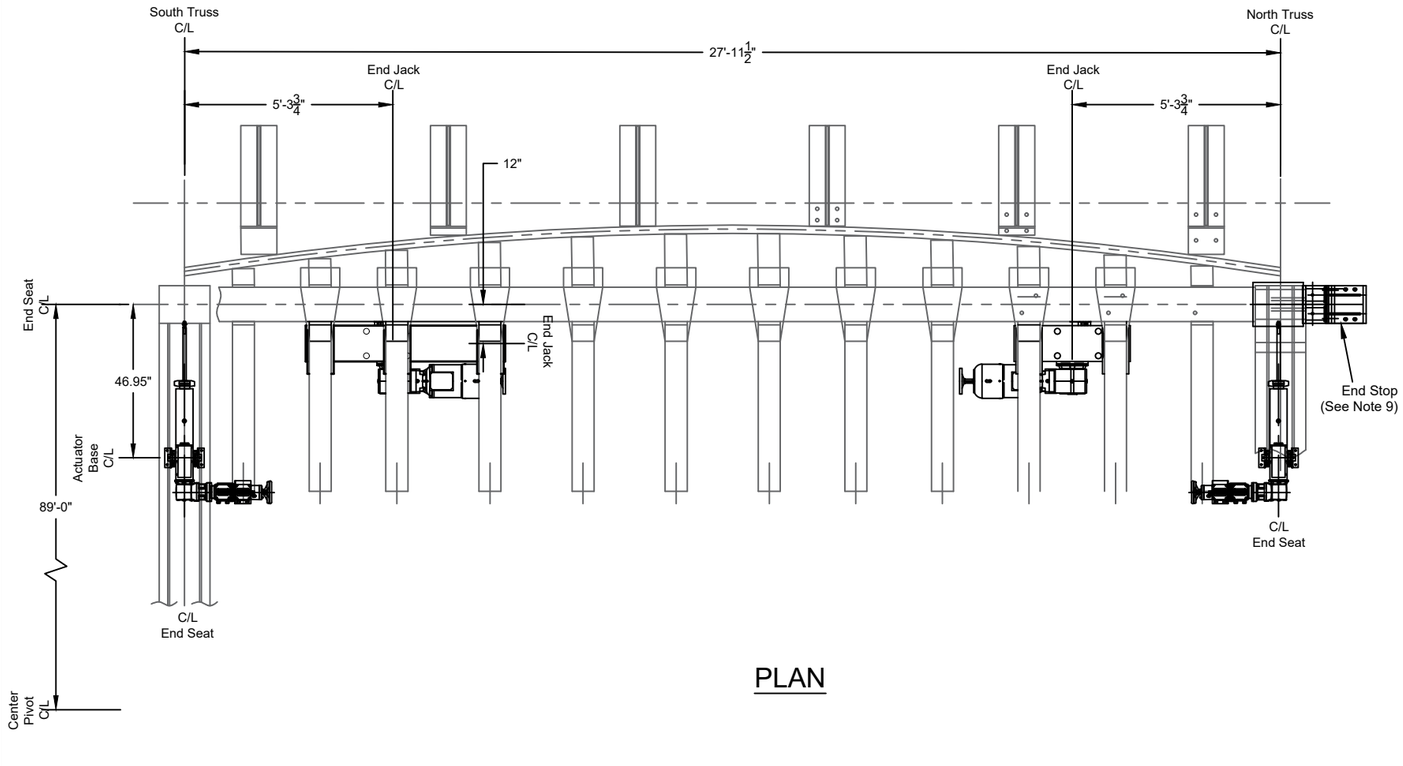

PLAN

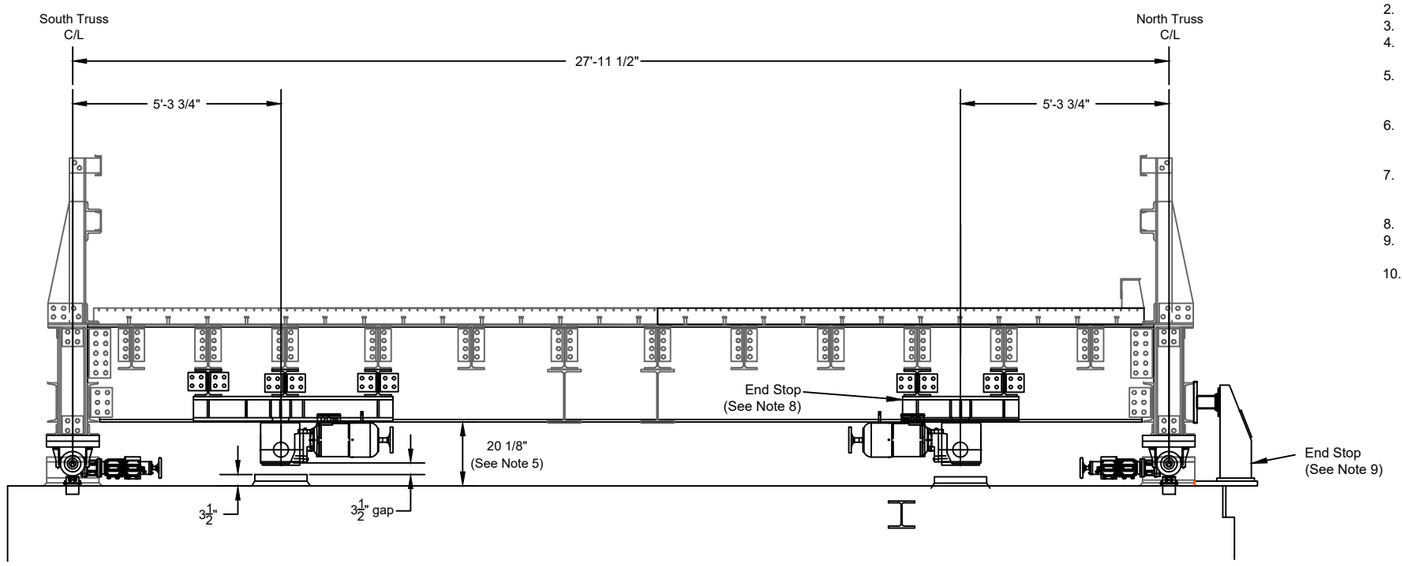

ELEVATION

END SEAT MACHINERY SCHEDULE

MARK NO.	QTY. REQ'D	COMPONENT	DESCRIPTION (SEE SPECIAL PROVISIONS FOR ADDITIONAL INFORMATION)	REFERENCE SHEETS
ES1	4	End Seat Support	Steel Weldment. Material: ASTM A709 Grade 50 U.O.N. Top Plate. Material: ASTM A276 Type 316 Stainless Steel.	M10, M11, M11A
ES2	4	End Seat Actuator	Linear Actuator: 2,200 lb., Thrust Force, 14" Stroke.	M10, M11
ES3	4	End Seat Shoe	Bronze. Material: ASTM B22 Alloy C91100.	M10, M11, M11A
ES4	4	End Seat Shoe Guide	Steel Weldment. Material: ASTM A276 Type 316 Stainless Steel.	M10, M11, M11A
ES5	4	Actuator Cover Plate	1/2" Steel Plate. Material: ASTM A709 Grade 50.	M10, M11, M12
ES6	4	Actuator Mounting Plate	2" Steel Plate. Material: ASTM A709 Grade 50.	M10, M11, M12

END JACK MACHINERY SCHEDULE

MARK NO.	QTY. REQ'D	COMPONENT	DESCRIPTION (SEE SPECIAL PROVISIONS FOR ADDITIONAL INFORMATION)	REFERENCE SHEETS
EJ1	4	End Jack Support	Steel Weldment. Material: ASTM A709 Grade 50.	M10, M13
EJ2	4	End Jack	35 Ton Screw Jack with 6" Stroke.	M10
EJ3	4	End Jack Shoe	1" Steel Plate. Material: ASTM A709 Grade 50.	M10, M13
EJ4	4	End Jack Strike Plate	Bronze, Material: ASTM B22 Alloy C93700.	M10, M13

SHEET NOTES

1. See Sheet M2 for general notes applicable to work.
2. Span shall be properly balanced prior to final alignment and shimming of End Jacks EJ2 and End Jack Shoes EJ3.
3. Adjust shims at each End Jack Shoe EJ3 location to achieve the reactions provided in the Special Provisions.
4. Adjust shims at each End Jack EJ2 location to provide indicated gap between Strike Plate EJ4 and Shoe EJ3 with the span supported on the End Seats.
5. Elevation View shows position of end floor beam relative to top of pier with span in supported position. Free position of span (End Jacks and End Seats retracted) will result in the end floor beam being approximately 1/2" lower than indicated. See Note 8 on Sheet M12 for additional information.
6. The distance from the underside of the End Jack Shoe EJ3 at its fully retracted position to the contact surface of the End Jack Strike Plate EJ4 shall not vary by more than 1/16" When the swing span is closed and fully seated on its End Seats.
7. Coordinate mounting of limit switches provided under electrical work to indicate limits of travel for End Jacks EJ2 and End Seat Actuators ES2. Limit switch mounting shall be durable, weatherproof and located so as not to obstruct span travel.
8. See Structural Drawings Sheet 32 for End Jack Support EJ1 details.
9. See Structural Drawings Sheet 25 for End Stop Details. All work for procurement, fabrication, installation, hardware, shims and other incidentals for the End Stops shall be paid under Pay Item 860.1862 Fully Closed Stops.
10. The Contractor is alerted to the need to order End Seat Actuator ES2 and End Jack EJ2 with specific orientations for their intended locations. This includes left-hand and right-hand configurations. It also includes specifically locating all accessory items such as electrical conduit and junction boxes so that they are accessible for maintenance while still providing a minimum of 2" clearance with all fixed structural, electrical and mechanical components during operation of the swing span. The weatherproof accessory housing on the End Seat Actuator requires particular attention during ordering, fabrication and installation to achieve proper clearance.

GRESHAM CONSULTING
MOVABLE STRUCTURES ENGINEERS
25 SKUNK HOLLOW ROAD
CHALFONT, PA 18914
www.greshamconsulting.com
(215)997-0645

STATE OF MAINE
DEPARTMENT OF TRANSPORTATION

STP-2175(100)

WIN 21751.00

BRIDGE PLANS

BRIDGE NO. 2789

STATE OF MAINE TIMOTHY C. GRESHAM 16735 PROFESSIONAL ENGINEER

PROJ. MANAGER J. STETSON, PE	BY	DATE
DESIGN-DETAILED	J.M. RAMOS	06-29-22
CHECKED-REVIEWED		
DESIGN2-DETAILED2		
DESIGN3-DETAILED3		
REVISIONS 1		
REVISIONS 2		
REVISIONS 3		
REVISIONS 4		
FIELD CHANGES		

DESIGN2-DETAILED2
16735
P.E. NUMBER
08-19-2022
DATE

SOUTHPORT BRIDGE ROUTE 27
OVER TOWNSEND GUT
SOUTHPORT & BOOTHBAY HARBOR ME LINCOLN COUNTY

NEW END SEAT AND END JACK
MACHINERY SCHEDULE AND ARRANGEMENT

SHEET NUMBER

M11

M11 OF M24

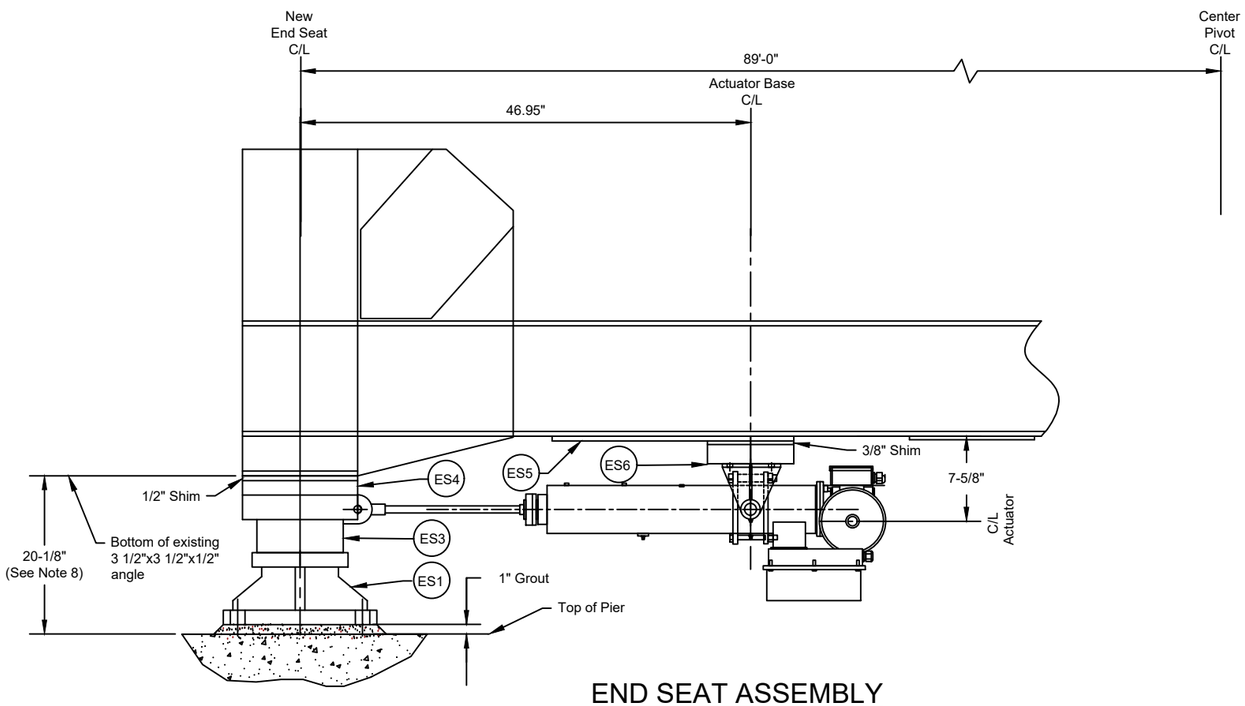

END SEAT ASSEMBLY

Scale: 1-1/2" = 1'-0"

SHEET NOTES

1. See Sheet M2 for general notes applicable to work.
2. Span shall be properly balanced prior to final alignment and shimming of End Seat Actuator ES1 and End Seat Shoe Guide ES4. The span shall also be properly balanced prior to final grouting of End Seat Support ES1.
3. Adjust shims at each End Seat Shoe ES3 and End Seat Shoe Guide ES4 to provide full contact between them across their entire surface. Full contact shal be considered contact that achieves less than a 0.003" gap at any of the four corners of the interface.
4. Coordinate mounting of limit switches provided under electrical work to indicate limits of travel for End Seat Shoes ES3. Limit switch mounting shall be durable, weatherproof and located so as not to obstruct span travel.
5. See Sheet M14 for additional notes related to Actuator Cover Plate ES5 holes and mounting hardware.
6. See Sheet M14 for additional information related to Actuator Mounting Plate ES6 holes and mounting hardware.
7. Existing end wedge shaft shown for reference. Shaft to be removed prior to the start of End Seat component installation.
8. Original Plan dimensional information (circa 1939) shows the distance from top of pier to bottom of end floor beam/truss as 20 5/8". This contract intends to reduce that existing elevation difference by 1/2". Refer to the SP860 for additional information and construction requirements.

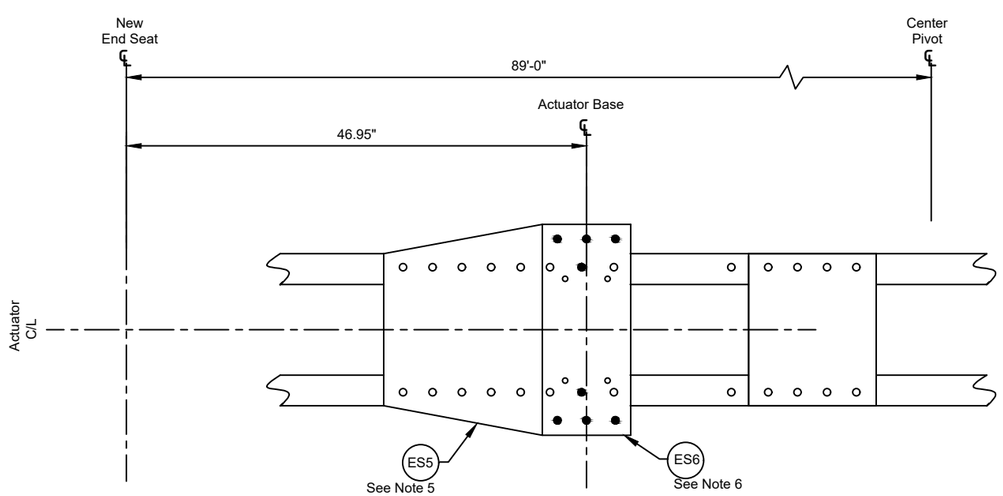

ACTUATOR MOUNT INSTALLS

Scale: 1-1/2" = 1'-0"

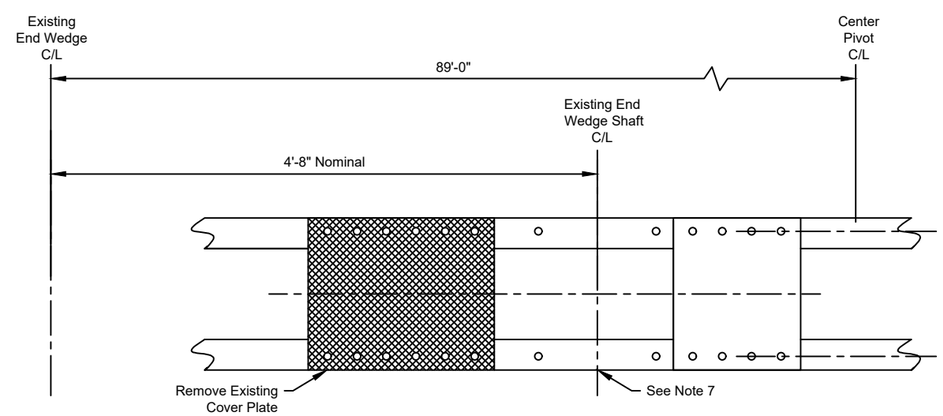

ACTUATOR MOUNT REMOVALS

Scale: 1-1/2" = 1'-0"

= To Be Removed

GRESHAM CONSULTING
MOVABLE STRUCTURES ENGINEERS
25 SKUNK HOLLOW ROAD
CHALFONT, PA 18914
www.greshamconsulting.com
(215)997-0645

STATE OF MAINE
DEPARTMENT OF TRANSPORTATION

STP-2175(100)

BRIDGE NO. 2789

WIN 21751.00

BRIDGE PLANS

STATE OF MAINE
TIMOTHY C. GRESHAM
16735
PROFESSIONAL ENGINEER

PROJ. MANAGER	J. STETSON, PE		
DESIGN-DETAILED		HED	06-28-22
CHECKED-REVIEWED			
DESIGN2-DETAILED2			
DESIGN3-DETAILED3			
REVISIONS 1			
REVISIONS 2			
REVISIONS 3			
REVISIONS 4			
FIELD CHANGES			

DESIGN2-DETAILED2

16735
P.E. NUMBER

08-19-2022
DATE

SOUTHPORT BRIDGE ROUTE 27
OVER TOWNSEND GUT
SOUTHPORT & BOOTHBAY HARBOR ME LINCOLN COUNTY

END SEAT MACHINERY ASSEMBLY

SHEET NUMBER

M12

M12 OF M24

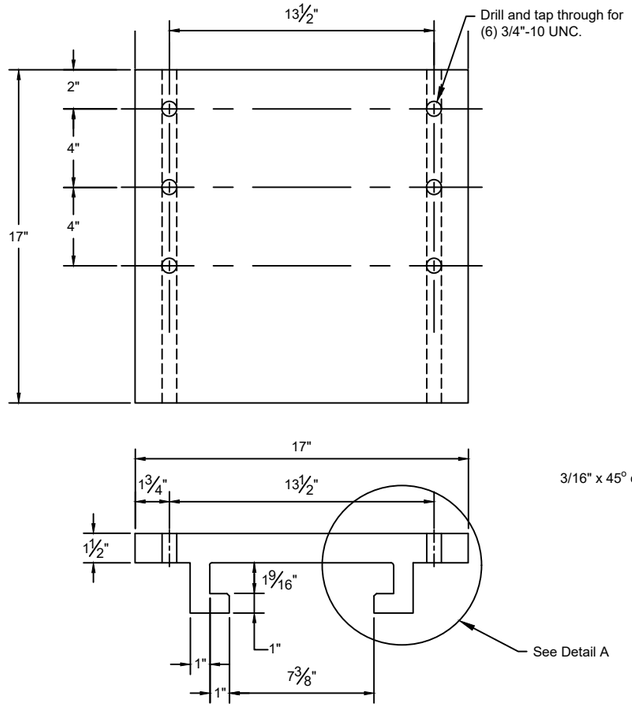

ES4 END SEAT SHOE GUIDE

Scale: 3" = 1'-0" U.O.N.
Provide 125 Finish All Over U.O.N

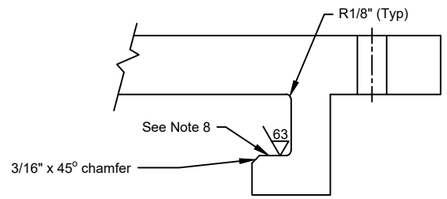

DETAIL A

Scale: 6" = 1'-0"

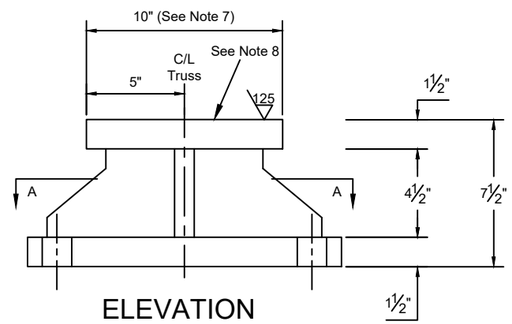

ELEVATION

Scale: 3" = 1'-0"

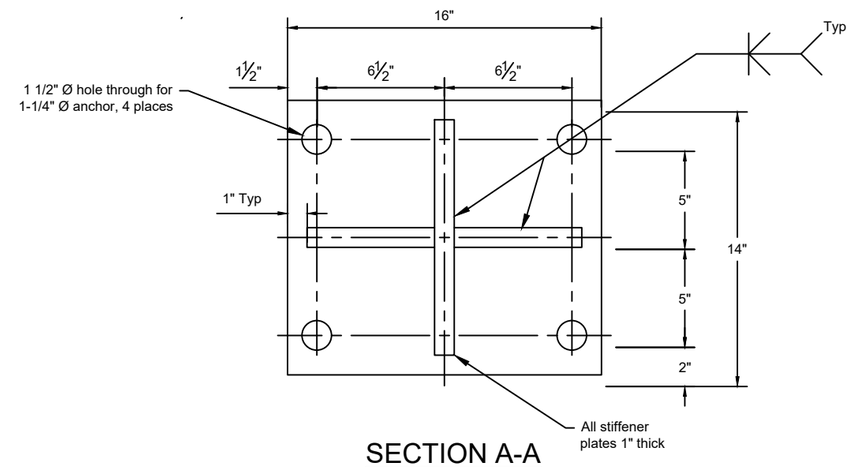

SECTION A-A

ES1 END SEAT SUPPORT

Scale: 3" = 1'-0"

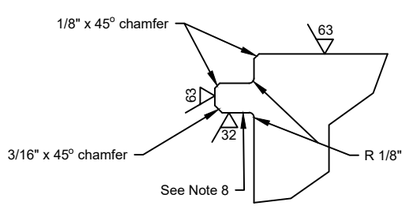

DETAIL B

Scale: 6" = 1'-0"

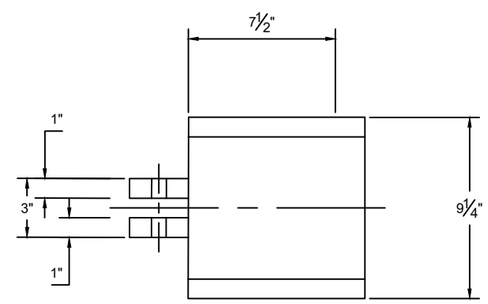

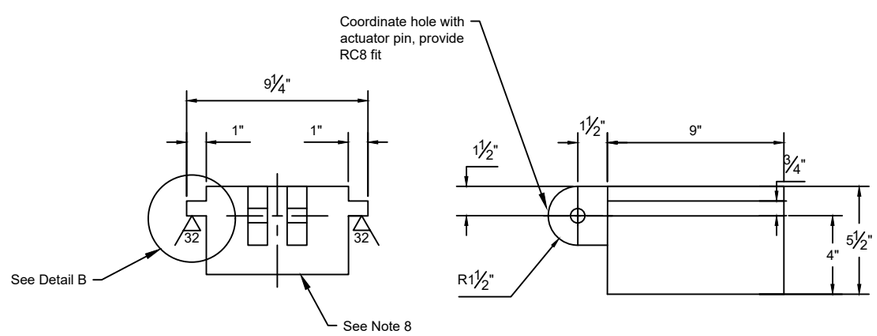

ES3 END SEAT SHOE

SCALE: 3" = 1'-0" U.O.N.
Provide 125 Finish All Over U.O.N.

SHEET NOTES

1. See Sheet M2 for general notes applicable to work.
2. See End Seat Assembly Schedule on Sheet M11 for materials and quantities.
3. All dimensions are finished dimensions unless otherwise noted. Add stock for fabrication as necessary to ensure complete cleanup of machined surfaces.
4. Spot face all bolt holes as necessary to ensure full bearing of bolt head and nut on surface.
5. End Seat Support ES1 fabrication: join top plate, webs and base plate with complete joint penetration groove welds. Mill stiffeners to bear and secure with filler welds as shown. Seal all welds to prevent open joints.
6. Stress relieve weldment prior to machining.
7. Top plate of End Seat Support ES1 shall be 10"x12"x1 1/2" centered above bottom plate.
8. Brush lubricate End Seat Support ES1, End Seat Shoe ES3 and End Seat Shoe Guide ES4 at the locations shown with lubricant called for in SP860 Section 860.7.10 "Lubrication" or as approved by the Department. The surfaces to be lubricated include the interfaces between the End Seat Shoe ES3 and the End Seat Shoe Guide ES4 that are engaged during the driving and withdrawing of the End Seat Shoes ES3. Also lubricate the bottom of the End Seat Shoe ES3 and the top of the End Seat Support ES1. DO NOT lubricate the top of the End Seat Shoe ES3 or the bottom of the End Seat Shoe Guide ES4.
9. End Seat Shoe ES3 shall be machined from a single block of bronze.

GRESHAM CONSULTING
MOVABLE STRUCTURES ENGINEERS
25 SKUNK HOLLOW ROAD
CHALFONT, PA 18914
www.greshamconsulting.com
(215)997-0645

STATE OF MAINE
DEPARTMENT OF TRANSPORTATION

STP-2175(100)

BRIDGE NO. 2789

WIN 21751.00

BRIDGE PLANS

PROJ. MANAGER	J. STETSON, PE		
DESIGN-DETAILED			
CHECKED-REVIEWED			
DESIGN2-DETAILED2			
DESIGN3-DETAILED3			
REVISIONS 1			
REVISIONS 2			
REVISIONS 3			
REVISIONS 4			
FEAD-CHANGES			
	BY	DATE	
	E. CANZA	06-28-22	
DESIGN2-DETAILED2			
16735			
P.E. NUMBER			
08-19-2022			
DATE			

SOUTHPORT BRIDGE ROUTE 27
OVER TOWNSEND GUT
SOUTHPORT & BOOTHBAY HARBOR ME LINCOLN COUNTY

NEW END SEAT
MACHINERY DETAILS-1

SHEET NUMBER

M13

M13 OF M24

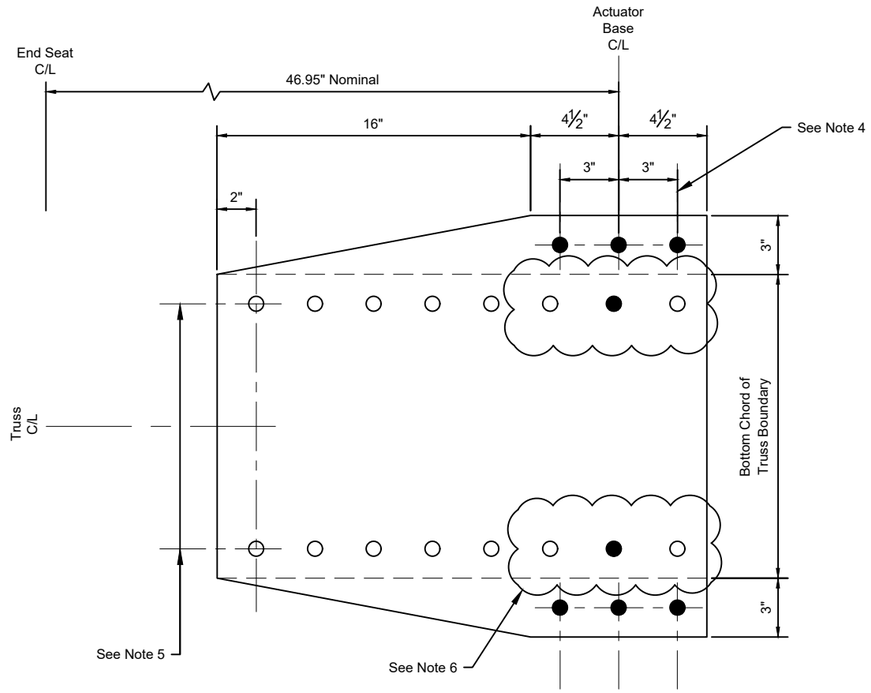

ACTUATOR COVER PLATE

Scale: 3" = 1'0-0"
125 All Over U.O.N

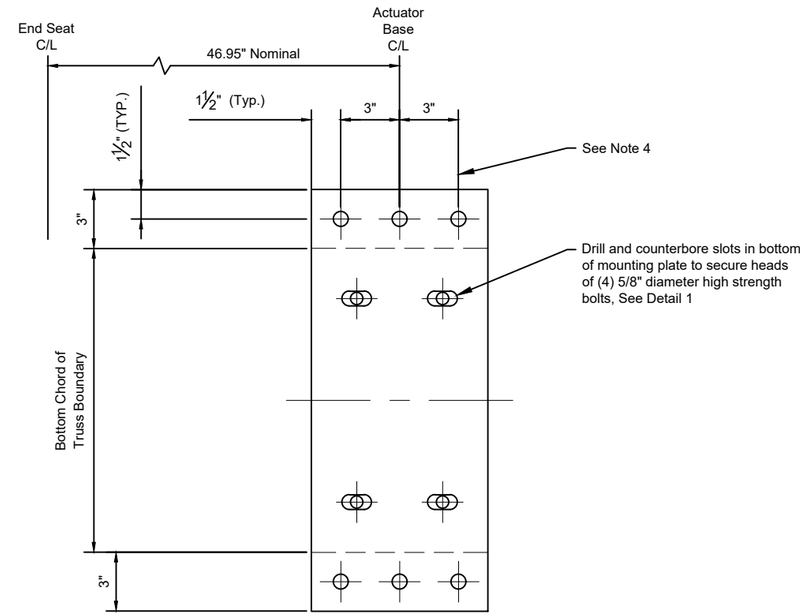

ACTUATOR MOUNTING PLATE

Scale: 3" = 1'-0"
125 All Over U.O.N

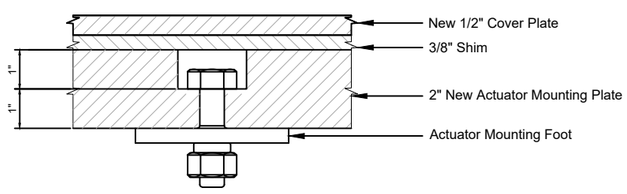

DETAIL 1

Scale: 6" = 1'-0"

SHEET NOTES

1. See Sheet M2 for general notes applicable to work.
2. See End Seat Machinery Schedule on Sheet M11 for materials and quantities.
3. All dimensions are finished dimensions unless otherwise noted. Add stock for fabrication as necessary to ensure complete cleanup of machined surfaces.
4. After final alignment, drill and ream through Actuator Cover Plate ES5, Actuator Mounting Plate ES6 and any installed shims for 3/4" diameter high strength bolts, six (6) places.
5. Use existing holes in bottom flange of truss as template to drill holes for 3/4" diameter high strength bolts for fourteen (14) existing holes. Two (2) new holes required equally spaced between existing holes.
6. Drill holes for 3/4" diameter high strength, countersunk bolts, six (6) places.

GRESHAM CONSULTING
MOVABLE STRUCTURES ENGINEERS
25 SKUNK HOLLOW ROAD
CHALFONT, PA 18914
www.greshamconsulting.com
(215)997-0645

STATE OF MAINE
DEPARTMENT OF TRANSPORTATION

STP-2175(100)

BRIDGE NO. 2789

WIN 21751.00

BRIDGE PLANS

STATE OF MAINE
TIMOTHY C. GREENHALL
16735
PROFESSIONAL ENGINEER REGISTRATION

PROJ. MANAGER	J. STETSON, PE		
DESIGN-DETAILED	G. GUEVARRA	06-24-22	
CHECKED-REVIEWED			
DESIGN2-DETAILED2			
DESIGN3-DETAILED3			
REVISIONS 1			
REVISIONS 2			
REVISIONS 3			
REVISIONS 4			
FINAL CHANGES			

DESIGN2-DETAILED2
16735
P.E. NUMBER
08-19-2022
DATE

SOUTHPORT BRIDGE ROUTE 27
OVER TOWNSEND GUT
SOUTHPORT & BOOTHBAY HARBOR ME LINCOLN COUNTY

NEW END SEAT
MACHINERY DETAILS-2

SHEET NUMBER
M14

M14 OF M24

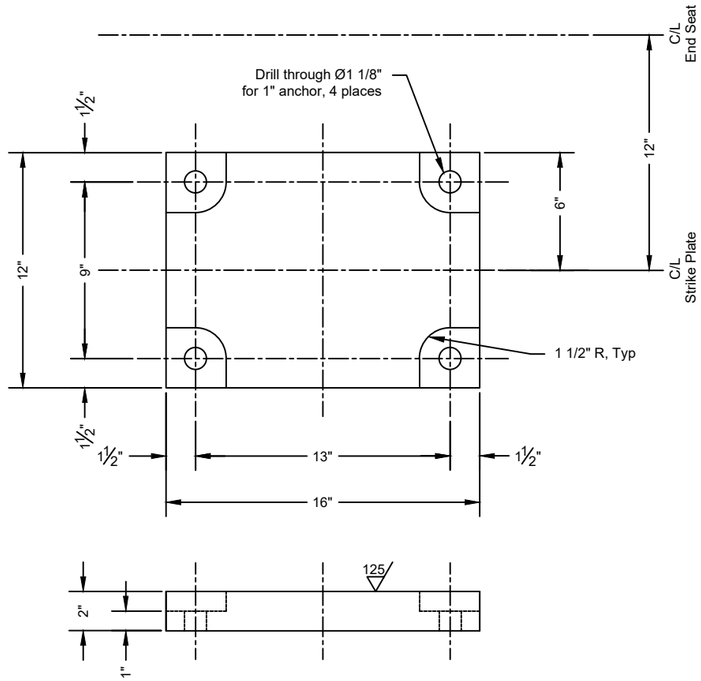

EJ4 END JACK STRIKE PLATE

Scale: 3" = 1'-0"

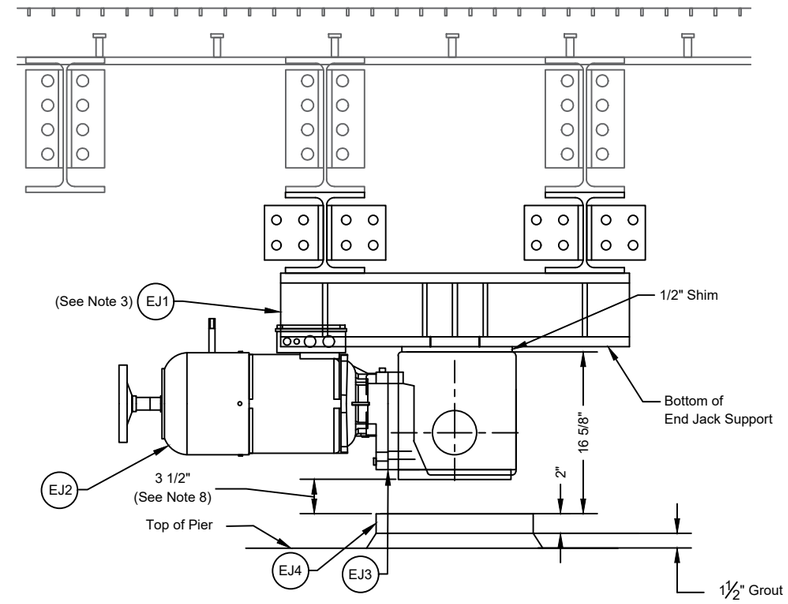

END JACK ELEVATION

Scale: 1-1/2" = 1'-0"

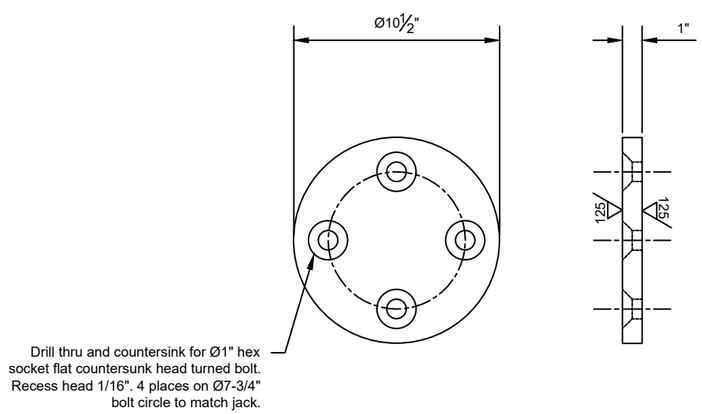

EJ3 END JACK SHOE

Scale: 3" = 1'-0"

SHEET NOTES

1. See Sheet M2 for General Notes applicable to work.
2. See End Jack Assembly Schedule on Sheet M11 for materials and quantities.
3. End Jack Support EJ1 shown is for the end jacks adjacent to the south truss. The End Jack Supports EJ1 for the end jacks adjacent to the north truss are similar, but longer in length and span 3 stringers. See Structural sheet titled "Jacking Support Details" for End Jack Support EJ1 details.
4. All dimensions are finished dimensions unless otherwise noted. Add stock for fabrication as necessary to ensure complete cleanup of machined surfaces.
5. Spot face all bolt holes as necessary to ensure full bearing of bolt head and nut on surface.
6. Span shall be properly balanced prior to final alignment and shimming of End Jack EJ2. The span shall also be properly balanced prior to final grouting of End Jack Strike Plate EJ4.
7. Stress relieve weldment prior to machining.
8. Adjust shims at each End Jack EJ2 location to provide indicated gap between Strike Plate EJ4 and Shoe EJ3 with the span supported on the End Seats. Set stroke of End Jacks for additional 1/4" to 5/16" for pulling and driving of End Seat Shoes.
9. End Jack Elevation view shows position of End Jack relative to top of pier with span in supported position. Free position of span (End Jacks and End Seats retracted) will result in the end floor beam being approximately 1/2" lower than indicated.
10. Coordinate mounting of limit switches provided under electrical work to indicate limits of travel for End Jack Shoes EJ3. Limit switch mounting shall be durable, weatherproof and located so as not to obstruct span travel.
11. Provide limit switch to prevent power to End Jack EJ2 when handwheel is installed and ready for use in providing manual operation.

GRESHAM CONSULTING
MOVABLE STRUCTURES ENGINEERS
25 SKUNK HOLLOW ROAD
CHALFONT, PA 18914
www.greshamconsulting.com
(215)997-0645

STATE OF MAINE
DEPARTMENT OF TRANSPORTATION

STP-2175(100)

BRIDGE NO. 2789 — WIN 21751.00 — BRIDGE PLANS

STATE OF MAINE — TIMOTHY C. GRESHAM — 16735 — PROFESSIONAL ENGINEER

PROJ. MANAGER	J. STETSON, PE		
DESIGN-DETAILED		BY	DATE
CHECKED-REVIEWED		J. SALVALEON	05-28-22
DESIGN2-DETAILED2			
DESIGN3-DETAILED3			
REVISIONS 1			
REVISIONS 2			
REVISIONS 3			
REVISIONS 4			
FINAL CHANGES			

DESIGN2-DETAILED2
16735
P.E. NUMBER
08-19-2022
DATE

SOUTHPORT BRIDGE ROUTE 27
OVER TOWNSEND GUT
SOUTHPORT & BOOTHBAY HARBOR ME LINCOLN COUNTY

NEW END JACK
MACHINERY DETAILS

SHEET NUMBER

M15

M15 OF M24

P1 MAIN PINION BEARING

P4 ENCLOSED GEAR REDUCER (BOOTHBAY)

P2 BALANCE WHEEL ASSEMBLY

P5 ENCLOSED GEAR REDUCER (SOUTHPORT)

P3 CENTER PIVOT

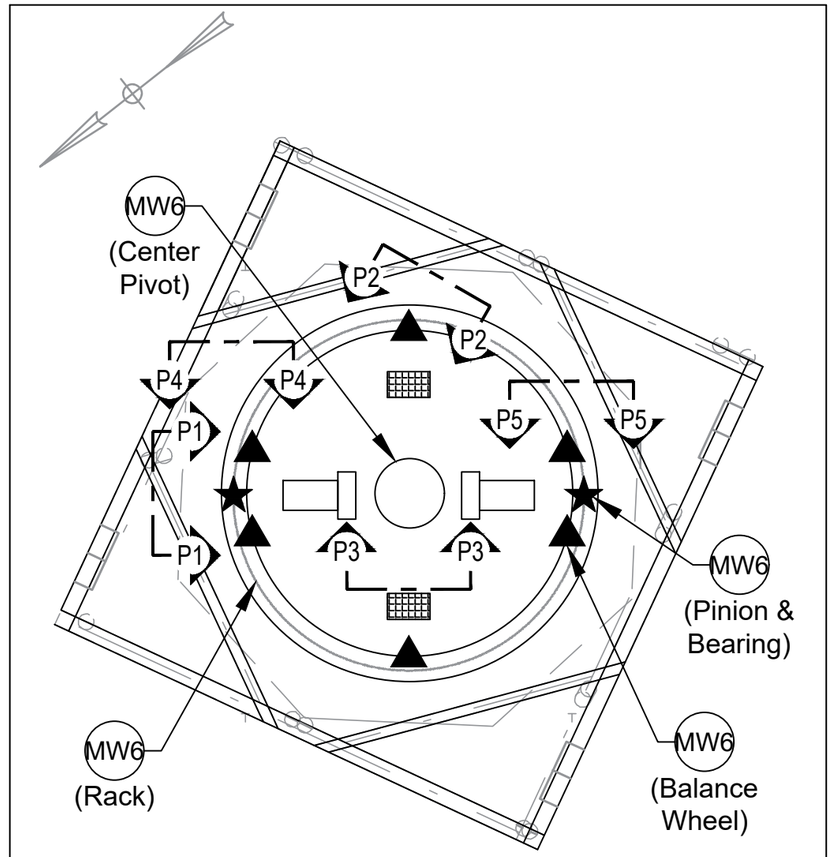

PIER 2

SHEET NOTES

1. See Sheet M2 for General Notes applicable to work.
2. Refer to the applicable portions of the Special Provisions for additional information and requirements for the work scope presented on this drawing.
3. Replace pinion bearing cap bolts in-kind. Remove no more than 1 bolt at a time, per bearing, when performing this work. Do not operate the span with any cap bolts removed.
4. Clean all pinion teeth and all rack teeth that engage during normal operation and over travel of the swing span. Remove all grease and surface corrosion. Relubricate with grease specified in the bridge's O&M Manual or as approved by the Engineer.
5. Shim all balance wheels to provide 1/16" +/- 1/64" clearance between each balance wheel and the track with the span final balanced, and the end seats and end jacks fully retracted.
6. Purge balance wheel bushings and ensure that grease passes without restriction. Relubricate with grease specified in the bridge's O&M Manual or as approved by the Engineer.
7. Drain, flush and refill center pivot with oil specified in the bridge's O&M Manual or as approved by the Engineer.
8. Drain, flush and refill enclosed gear reducers with oil specified in the bridge's O&M Manual or as approved by the Engineer.
9. Clean and paint reducer as called for in SP880 Section 860.9.4 "Enclosed Gear Reducers".
10. Remove and dispose of abandoned gear on top of Southport enclosed gear reducer. Care shall be taken not to damage shaft on which the gear is mounted.

GRESHAM CONSULTING
MOVABLE STRUCTURES ENGINEERS
25 SKUNK HOLLOW ROAD
CHALFONT, PA 18914
www.greshamconsulting.com
(215)997-0645

STATE OF MAINE
DEPARTMENT OF TRANSPORTATION

STP-2175(100)

BRIDGE NO. 2789 | WIN 21751.00 | BRIDGE PLANS

STATE OF MAINE
TIMOTHY C. GRESHAM
16735
PROFESSIONAL ENGINEER REGISTERED

PROJ. MANAGER	J. STETSON, PE	BY	DATE
DESIGN-DETAILED		J. AMOY	07-07-22
CHECKED-REVIEWED			
DESIGN2-DETAILED2			
DESIGN3-DETAILED3			
REVISIONS 1			
REVISIONS 2			
REVISIONS 3			
REVISIONS 4			
FEAD CHANGES			

DESIGN2-DETAILED2
16735
P.E. NUMBER
08-19-2022
DATE

SOUTHPORT BRIDGE ROUTE 27
OVER TOWNSEND GUT
SOUTHPORT & BOOTHBAY HARBOR ME LINCOLN COUNTY

MISCELLANEOUS REPAIRS

SHEET NUMBER
M16

FOR REFERENCE ONLY

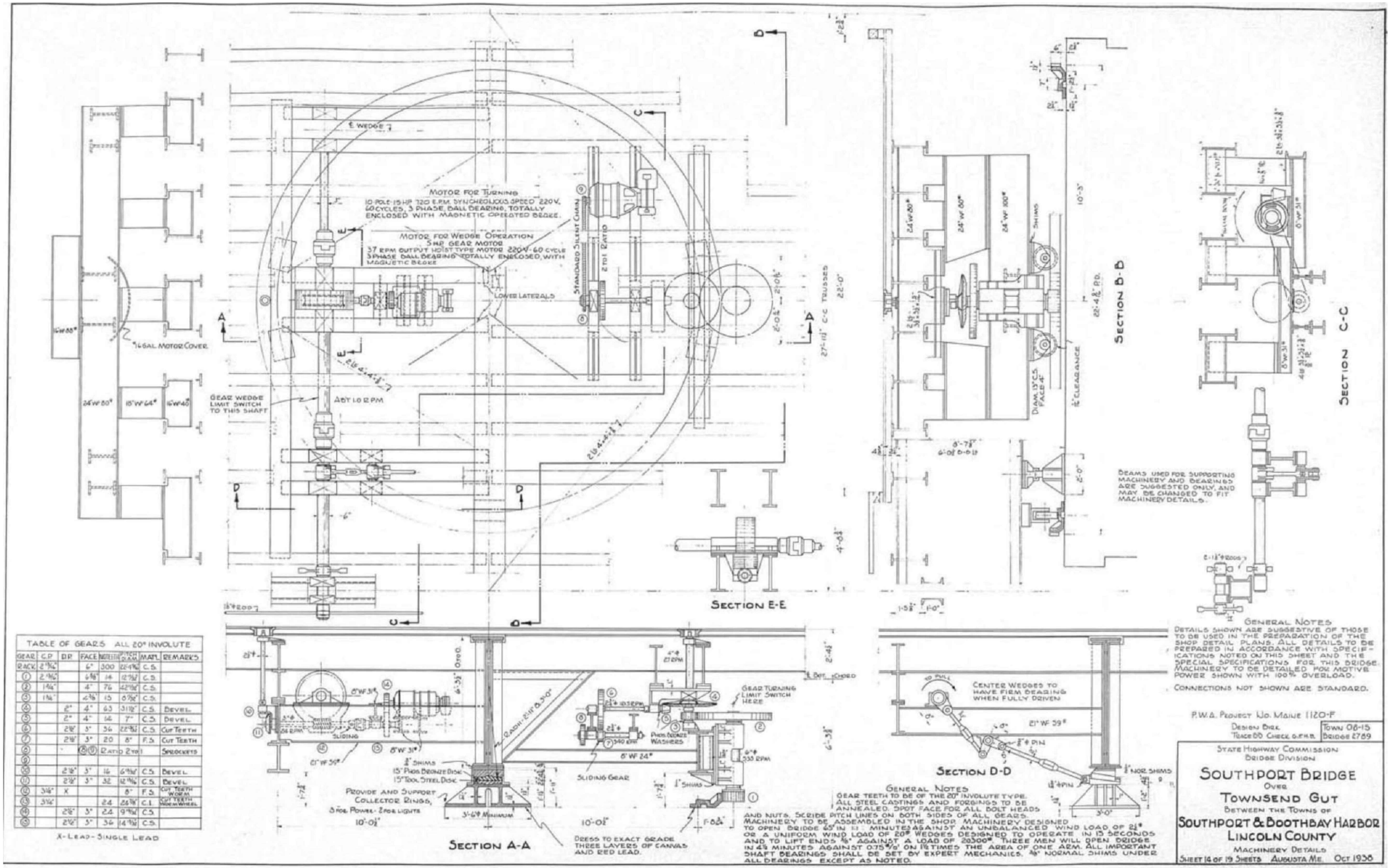

TABLE OF GEARS ALL 20° INVOLUTE								
GEAR	C.P.	D.P.	FACE	NO. TEETH	PITCH DIAM.	MAT'L	REMARKS
RACK	2 1/16"		6"	300	22 1/16"	C.S.	
①	2 1/16"		6 1/8"	14	12 1/16"	C.S.	
②	1 1/16"		4"	76	42 1/16"	C.S.	
③	1 1/16"		4 1/8"	15	8 1/16"	C.S.	
④		2"	4"	63	31 1/2"	C.S.	Devel.
⑤		2"	4"	14	7"	C.S.	Devel.
⑥		2 1/2"	3"	36	22 1/2"	C.S.	Cut Teeth
⑦		2 1/2"	3"	20	8"	F.S.	Cut Teeth
⑧			⑧/⑦	Ratio 2 to 1			Sprockets
⑨							
⑩		2 1/2"	3"	16	6 1/16"	C.S.	Devel.
⑪		2 1/2"	3"	32	12 1/16"	C.S.	Devel.
⑫	3/16"	X			8"	F.S.	Cut Teeth Worm
⑬	3/16"			24	24 1/16"	C.I.	Cut Teeth Worm Wheel
⑭		2 1/2"	3"	24	9 1/16"	C.S.	
⑮		2 1/2"	3"	36	14 1/16"	C.S.	

X-Lead - Single Lead

SHEET NOTES

1. This drawing on this sheet is provided as a reference for the demolition work shown on Sheet M3 to M5. The Contractor is advised that no dimensions or components depicted have been verified and therefore is to use this information at the Contractor's own risk.
2. The Span Drive Machinery was modified circa 1985. The Center Wedge Machinery and End Wedge Machinery were modified circa 2015. Refer to Sheets M17 to M22 for a representation of some of these modifications.
3. Full set of Plans is available on the MaineDOT website.

GRESHAM CONSULTING
MOVABLE STRUCTURES ENGINEERS
25 SKUNK HOLLOW ROAD
CHALFONT, PA 18914
www.greshamconsulting.com
(215)997-0645

STATE OF MAINE
DEPARTMENT OF TRANSPORTATION

STP-2175(100)

BRIDGE NO. 2789 | WIN 21751.00 | BRIDGE PLANS

STATE OF MAINE TIMOTHY C. GRESHAM 16735 PROFESSIONAL ENGINEER

PROJ. MANAGER	J. STETSON, PE		
DESIGN-DETAILED	J.M. RAMOS	06-29-22	DESIGN2-DETAILED2
CHECKED-REVIEWED			16735
DESIGN2-DETAILED2			P.E. NUMBER
DESIGN3-DETAILED3			08-19-2022
REVISIONS 1			DATE
REVISIONS 2			
REVISIONS 3			
REVISIONS 4			
FEAD-CHANGES			

SOUTHPORT BRIDGE ROUTE 27
OVER TOWNSEND GUT
SOUTHPORT & BOOTHBAY HARBOR ME LINCOLN COUNTY

ORIGINAL 1939 MACHINERY
REFERENCE DRAWING

SHEET NUMBER

M17

M17 OF M24

FOR REFERENCE ONLY

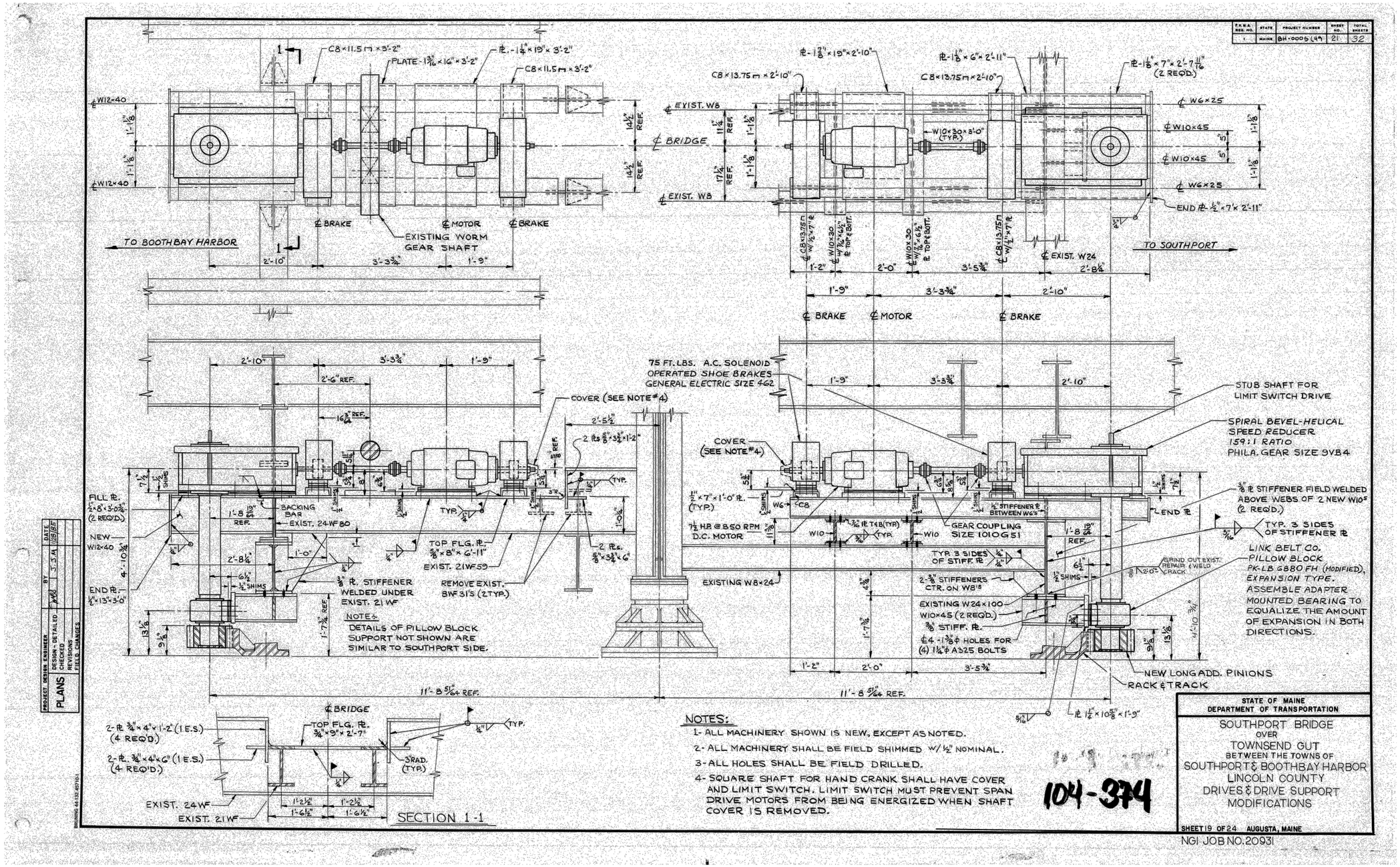

SHEET NOTES

1. This drawing is provided as a reference for the Span Drive demolition work shown on Sheet M3. The Contractor is advised that no dimensions or components depicted have been verified and therefore is to use this information at the Contractor's own risk.
2. The Span Drive Machinery was modified circa 1985. Refer to Sheets M17 and M18 for a representation of some of these modifications.
3. Full set of Plans is available on the MaineDOT website.

GRESHAM CONSULTING
MOVABLE STRUCTURES ENGINEERS
25 SKUNK HOLLOW ROAD
CHALFONT, PA 18914
www.greshamconsulting.com
(215)997-0645

STATE OF MAINE
DEPARTMENT OF TRANSPORTATION
STP-2175(100)
WIN 21751.00
BRIDGE NO. 2789
BRIDGE PLANS

STATE OF MAINE TIMOTHY C. GRENIER 10798 PROFESSIONAL ENGINEER

	BY	DATE
PROJ. MANAGER	J. STETSON, PE	
DESIGN-DETAILED	N. CALVARIO	05-24-22
CHECKED-REVIEWED		
DESIGN2-DETAILED2		
DESIGN3-DETAILED3		
REVISIONS 1		
REVISIONS 2		
REVISIONS 3		
REVISIONS 4		
FIELD CHANGES		

DESIGN2-DETAILED2
16735 P.E. NUMBER
08-19-2022 DATE

SOUTHPORT BRIDGE ROUTE 27
OVER TOWNSEND GUT
SOUTHPORT & BOOTHBAY HARBOR ME LINCOLN COUNTY

REHABILITATED 1985 SPAN DRIVE
MACHINERY REFERENCE DRAWING

SHEET NUMBER
M18
M18 OF M24

FOR REFERENCE ONLY

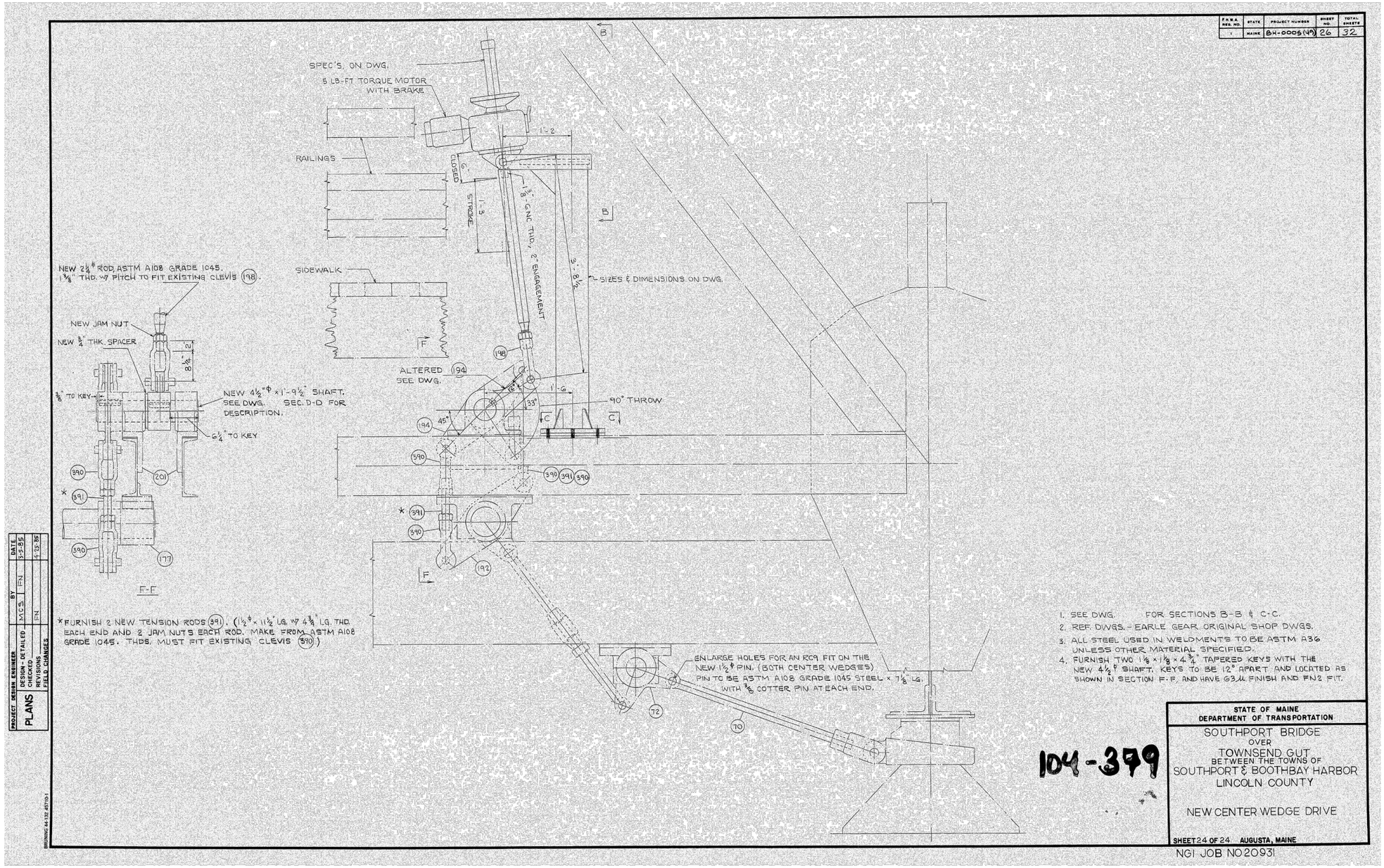

SHEET NOTES

1. This drawing on this sheet is provided as a reference for the Center Wedge demolition work shown on Sheet M4. The Contractor is advised that no dimensions or components depicted have been verified and therefore is to use this information at the Contractor's own risk.
2. The Center Wedge Machinery (and End Wedge Machinery) were modified circa 2015.
3. Refer to Sheet M21 for additional information related to the existing Center Wedge Machinery.
4. Refer to Sheet M22 for information related to the existing hydraulic system used for operation of the Center Wedges, End Wedges and End Jacks.
5. Full set of Plans is available on the MaineDOT website.

GRESHAM CONSULTING
MOVABLE STRUCTURES ENGINEERS
25 SKUNK HOLLOW ROAD
CHALFONT, PA 18914
www.greshamconsulting.com
(215)997-0645

STATE OF MAINE
DEPARTMENT OF TRANSPORTATION
STP-2175(100)
WIN 21751.00
BRIDGE NO. 2789
BRIDGE PLANS

STATE OF MAINE
TIMOTHY C. GREENHALL
16735
PROFESSIONAL ENGINEER

PROJ. MANAGER J. STETSON, PE	BY	DATE	
DESIGN-DETAILED	N. CALVARO	05-24-22	
CHECKED-REVIEWED			
DESIGN2-DETAILED2			
DESIGN3-DETAILED3			
REVISIONS 1			
REVISIONS 2			
REVISIONS 3			
REVISIONS 4			
FIELD CHANGES			

DESIGN2-DETAILED2
16735
P.E. NUMBER
08-19-2022
DATE

SOUTHPORT BRIDGE ROUTE 27
OVER TOWNSEND GUT
SOUTHPORT & BOOTHBAY HARBOR ME LINCOLN COUNTY

REHABILITATED 1985 CENTER WEDGE DRIVE
MACHINERY REFERENCE DRAWING

SHEET NUMBER
M19
M19 OF M24

FOR REFERENCE ONLY

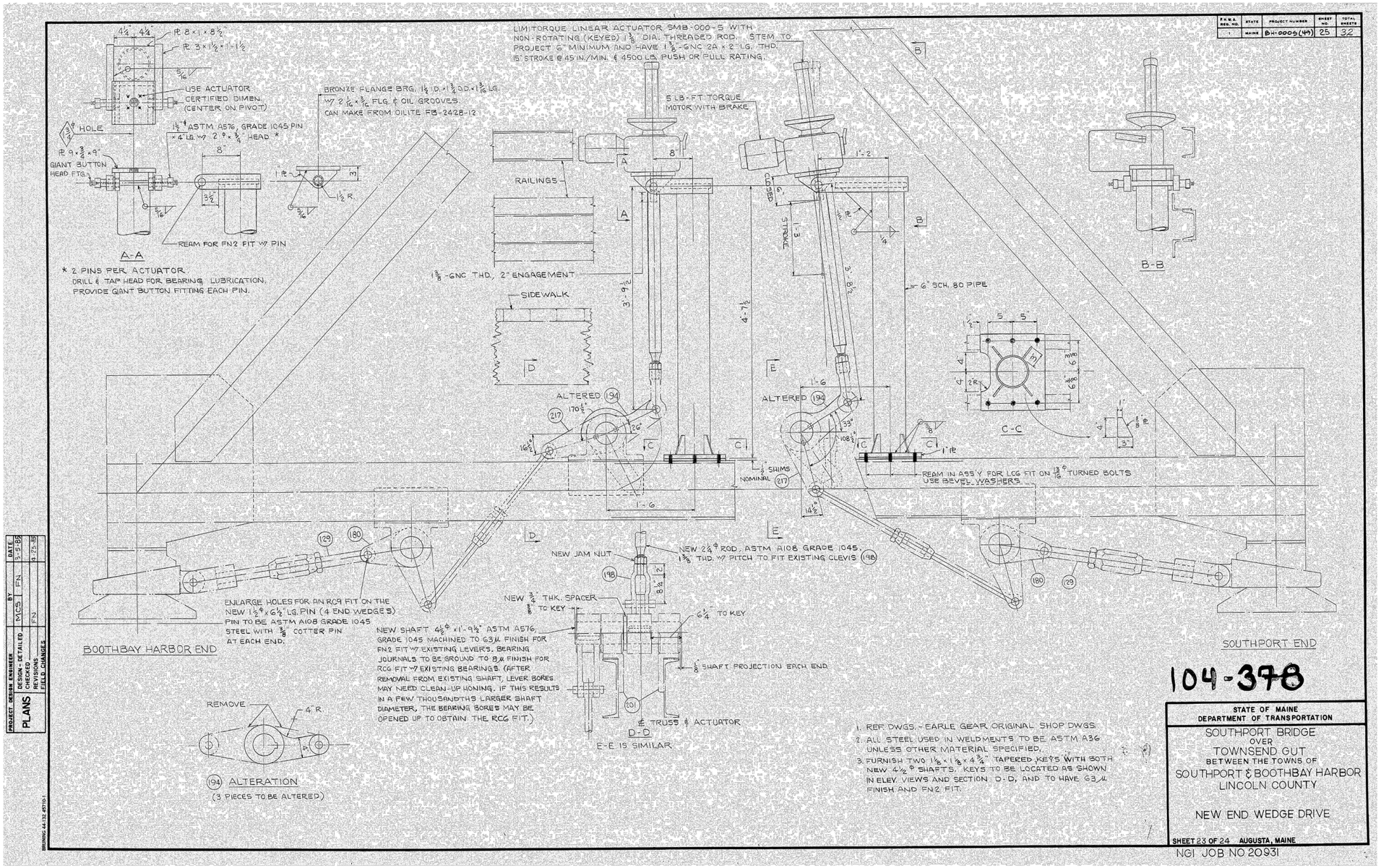

SHEET NOTES

1. This drawing on this sheet is provided as a reference for the End Wedge demolition work shown on Sheet M5. The Contractor is advised that no dimensions or components depicted have been verified and therefore is to use this information at the Contractor's own risk.
2. The End Wedge Machinery (and Center Wedge Machinery) were modified circa 2015.
3. Refer to Sheet M21 for additional information related to the existing End Wedge Machinery.
4. Refer to Sheet M22 for information related to the existing hydraulic system used for operation of the Center Wedges, End Wedges and End Jacks.
5. Full set of Plans is available on the MaineDOT website.

GRESHAM CONSULTING
MOVABLE STRUCTURES ENGINEERS
25 SKUNK HOLLOW ROAD
CHALFONT, PA 18914
www.greshamconsulting.com
(215)997-0645

STATE OF MAINE
DEPARTMENT OF TRANSPORTATION

STP-2175(100)

BRIDGE NO. 2789

WIN 21751.00

BRIDGE PLANS

SOUTHPORT BRIDGE ROUTE 27
OVER TOWNSEND GUT
SOUTHPORT & BOOTHBAY HARBOR ME LINCOLN COUNTY

REHABILITATED 1985 END WEDGE DRIVE
MACHINERY REFERENCE DRAWING

SHEET NUMBER

M20

M20 OF M24

FOR REFERENCE ONLY

F.H.W.A. REG. NO.	STATE	PROJECT NUMBER	SHEET NO.	TOTAL SHEETS
1	MAINE	BH-0005(49)	24	32

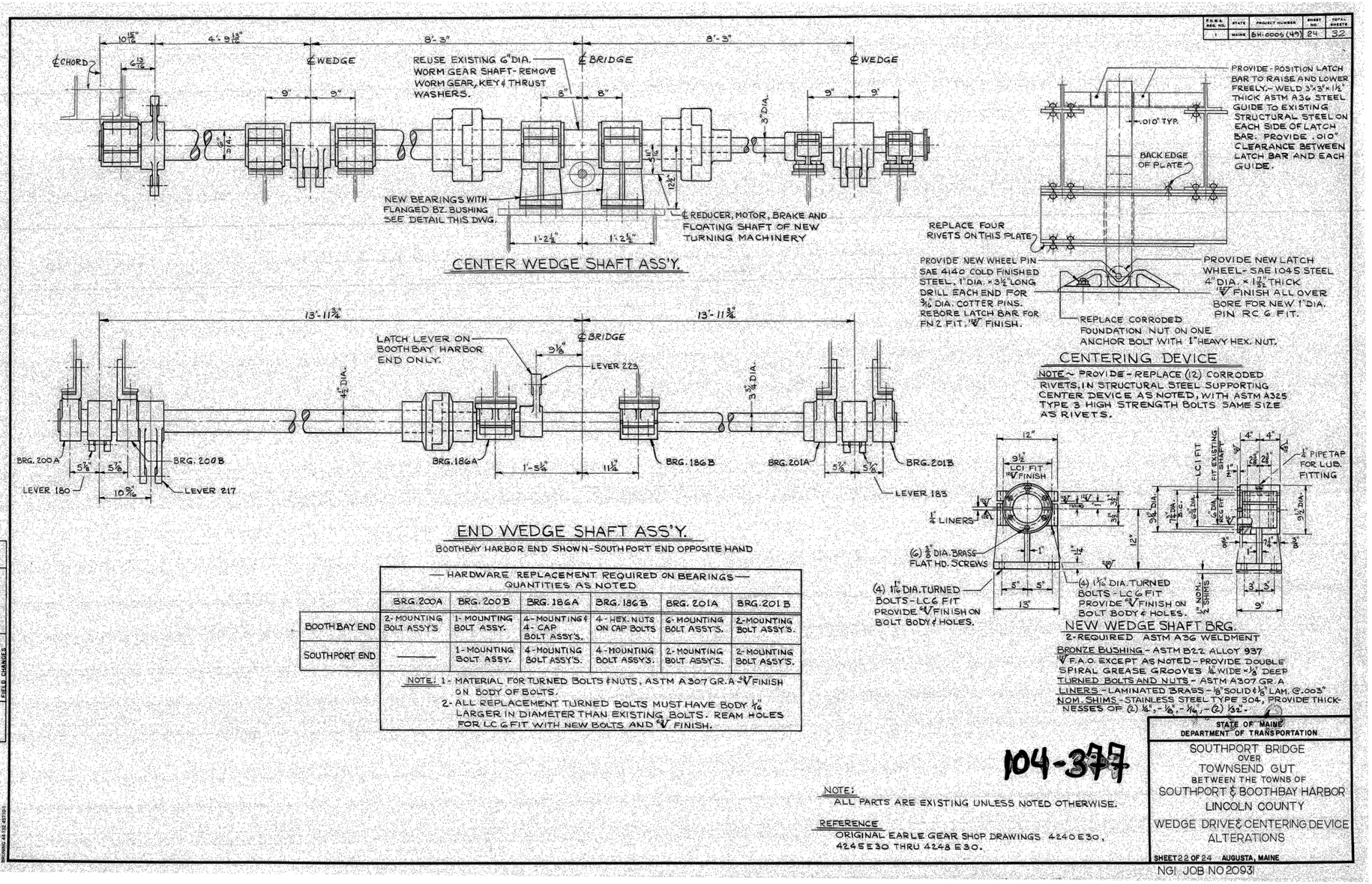

	HARDWARE REPLACEMENT REQUIRED ON BEARINGS — QUANTITIES AS NOTED					
	BRG. 200A	BRG. 200B	BRG. 186A	BRG. 186B	BRG. 201A	BRG. 201B
BOOTHBAY END	2-MOUNTING BOLT ASSY'S	1-MOUNTING BOLT ASSY.	4-MOUNTING & 4-CAP BOLT ASSY'S.	4-HEX. NUTS ON CAP BOLTS	6-MOUNTING BOLT ASSY'S.	2-MOUNTING BOLT ASSY'S.
SOUTHPORT END	———	1-MOUNTING BOLT ASSY.	4-MOUNTING BOLT ASSY'S.	4-MOUNTING BOLT ASSY'S.	2-MOUNTING BOLT ASSY'S.	2-MOUNTING BOLT ASSY'S.

NOTE: 1- MATERIAL FOR TURNED BOLTS & NUTS, ASTM A307 GR. A - 125 FINISH ON BODY OF BOLTS.
2- ALL REPLACEMENT TURNED BOLTS MUST HAVE BODY 1/16" LARGER IN DIAMETER THAN EXISTING BOLTS. REAM HOLES FOR LC6 FIT WITH NEW BOLTS AND 125 FINISH.

104-377

NOTE:
ALL PARTS ARE EXISTING UNLESS NOTED OTHERWISE.

REFERENCE
ORIGINAL EARLE GEAR SHOP DRAWINGS 4240E30, 4245E30 THRU 4248E30.

PROJECT DESIGN ENGINEER	BY	DATE
PLANS DESIGN-DETAILED	MKC	FEB. 86
CHECKED	K.S.C.	FEB. 86
REVISIONS	J.T.M.	APR. 86
FIELD CHANGES		

BRIDGING 48-102-4271-01

SHEET NOTES

1. This drawing on this sheet is provided as a reference for the Center Wedge demolition work shown on Sheet M4 and the End Wedge demolition work shown on Sheet M5. The Contractor is advised that no dimensions or components depicted have been verified and therefore is to use this information at the Contractor's own risk.
2. Refer to Sheet M19 for additional information related to the existing Center Wedge machinery and Sheet M20 for additional information related to the existing End Wedge machinery.
3. Refer to Sheet M22 for information related to the existing hydraulic system used for operation of the Center Wedges, End Wedges and End Jacks.
4. Full set of Plans is available on the MaineDOT website.

GRESHAM CONSULTING
MOVABLE STRUCTURES ENGINEERS
25 SKUNK HOLLOW ROAD
CHALFONT, PA 18914
www.greshamconsulting.com
(215)997-0645

STATE OF MAINE
DEPARTMENT OF TRANSPORTATION

STP-2175(100)

WIN 21751.00

BRIDGE NO. 2789

BRIDGE PLANS

STATE OF MAINE TIMOTHY C. GRENIER 16735 PROFESSIONAL ENGINEER

PROJ. MANAGER	J. STETSON, PE		
DESIGN-DETAILED	N. CALVARO	05-24-22	DESIGN-DETAILED2
CHECKED-REVIEWED			16735
DESIGN2-DETAILED2			P.E. NUMBER
DESIGN3-DETAILED3			08-19-2022
REVISIONS 1			DATE
REVISIONS 2			
REVISIONS 3			
REVISIONS 4			
FIELD CHANGES			

SOUTHPORT BRIDGE ROUTE 27
OVER TOWNSEND GUT
SOUTHPORT & BOOTHBAY HARBOR ME LINCOLN COUNTY

REHABILITATED 1985 END WEDGE AND CENTER WEDGE SHAFT ASSEMBLIES
REFERENCE DRAWING

SHEET NUMBER
M21

M21 OF M24

FOR REFERENCE ONLY

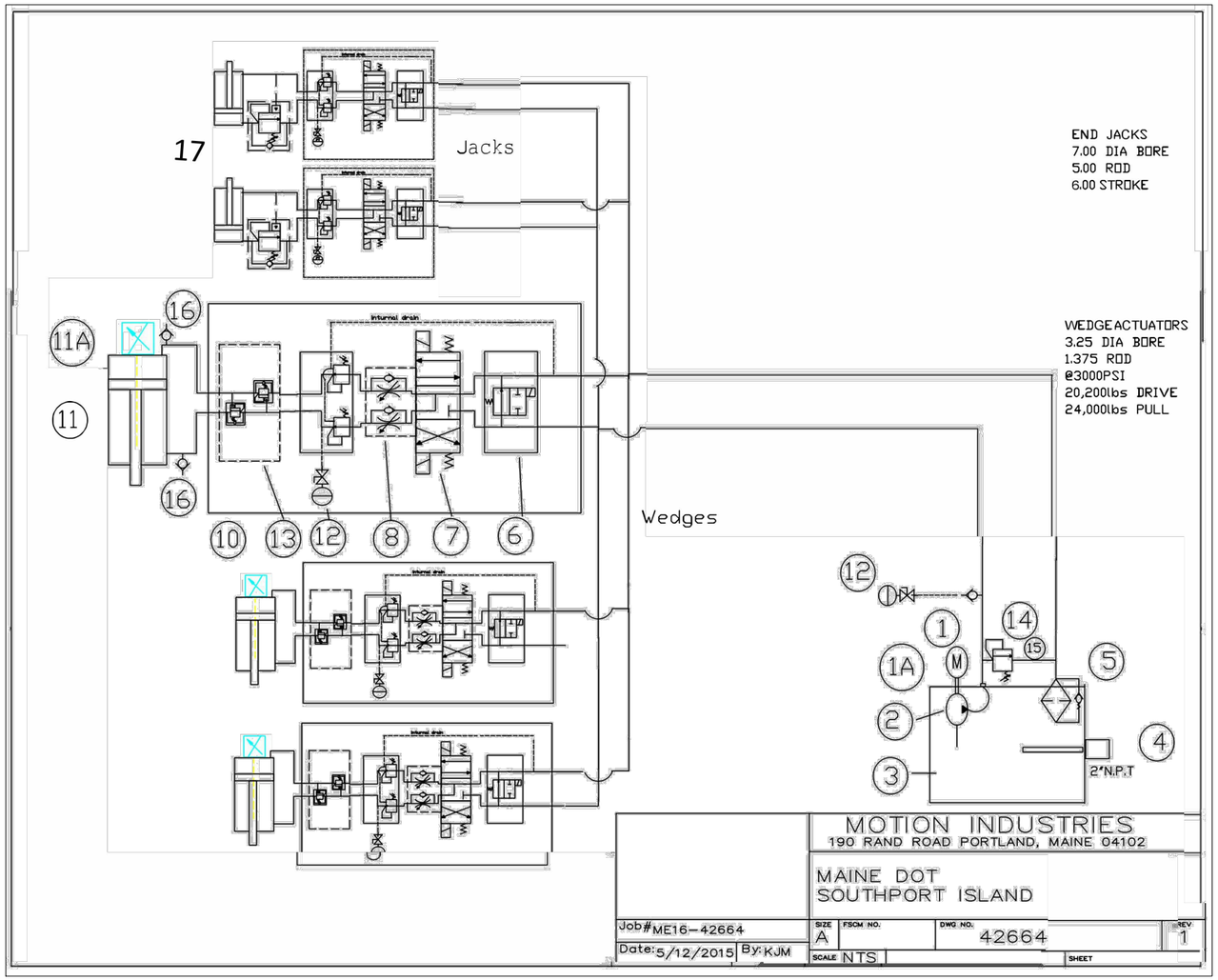

BILL OF MATERIALS - WEDGE AND JACK HYDRAULIC SYSTEM

ITEM	MI ITEM NO.	DESCRIPTION
1	77X75971	CSSEWDM3714T 10 HP 1760 RPM 215TC STAINLESS MOTOR
1A	528X01114	300 X 1-3/8 KW 5/16 STD HUB MOTOR SIDE
1A	528X01088	300 X 3/4 KW 3/16 STD HUB PUMP SIDE
1A	528X01420	M370N6 INSERT NEOPRENE
2	287X70048	26004-RZC PUMP, 1.02 PER REV GEAR PUMP
3	745Z62000	VP-25 STAINLESS STEEL TANK
4	1326Z62000	ARMTO-2255E2 T1_P/N283311 TANK HEATER
5	441X20043	RFMMM90BC 15E2.1/12, RETURN FILTER
5A	441H98017	0090R010 MM, REPLACEMENT ELEMENT
6	217X02299	AD03-P01-2-S/C
7	900H43761	DG4V 3S 6C MUH5 60 DIRECTIONAL CONTROL VALVE
8	900H14146	DGMFN 3 Y A2W B2W 41 METER OUT FLOW CONTROL
9	569H79466	SV5-10-0-0-00 CART 02-185352 HOUSING UNLOADING SOLENOID
9A	569X80095	MCSCJ024DG000010 COIL ONLY 24V, UNLOADING SOLENOID
10	12372Z62000	5412ESS202008 NEMA 4X STAINLESS STEEL ENCLOSURE
11	5087Z62000	SSHKN-MF1-3.25X12X1.375-K-S HYDRAULIC CYLINDER ASSEMBLY
11		RHT0112OUD601A01
12	931F06617	A-10 5000PSI 4-20MA 1/4NPT DIN PRESSURE TRANSDUCER
13	2513X71036	PPDB-LAN-E89 A-B PORT PRESSURE REDUCING VALVE
14	900H03568	RV5-10-S-50 SCREW ADJUST RELIEF VALVE
15	569X80252	HOUSING ONLY RELIEF MOUNTED @ TANK 23036A8
16	358F32496	K4S/S QUICK CONNECT FOR 12B BACK UP PUMP
17	5087x62000	6" x 7" x 5.00" JACK CYLINDER hpi# 32235

SHEET NOTES

1. This drawing on this sheet is provided as a reference for the Center Wedge demolition work shown on Sheet M4, the End Wedge demolition work shown on Sheet M5 and the End Jack demolition work shown on Sheet M6. The Contractor is advised that no dimensions or components depicted have been verified and therefore is to use this information at the Contractor's own risk.
2. Refer to Sheets M19 and M21 for additional information related to the existing Center Wedge machinery.
3. Refer to Sheets M20 and M21 for additional information related to the existing End Wedge machinery.
4. Full set of Plans is available on the MaineDOT website.

GRESHAM CONSULTING
MOVABLE STRUCTURES ENGINEERS
25 SKUNK HOLLOW ROAD
CHALFONT, PA 18914
www.greshamconsulting.com
(215)997-0645

STATE OF MAINE
DEPARTMENT OF TRANSPORTATION

STP-2175(100)

BRIDGE NO. 2789

WIN 21751.00

BRIDGE PLANS

STATE OF MAINE
TIMOTHY C. GREENHALL
16735
PROFESSIONAL ENGINEER

PROJ. MANAGER	J. STETSON, PE	BY	
DESIGN-DETAILED			
CHECKED-REVIEWED		N. CALVARIO	05-24-22
DESIGN2-DETAILED2			
DESIGN3-DETAILED3			
REVISIONS 1			
REVISIONS 2			
REVISIONS 3			
REVISIONS 4			
FIELD CHANGES			

DESIGN2-DETAILED2
P.E. NUMBER 16735
DATE 08-19-2022

SOUTHPORT BRIDGE ROUTE 27
OVER TOWNSEND GUT
SOUTHPORT & BOOTHBAY HARBOR ME LINCOLN COUNTY

2015 END WEDGE, CENTER WEDGE AND
END JACK HYDRAULIC SYSTEM
REFERENCE DRAWING

SHEET NUMBER
M22

M22 OF M24

FOR REFERENCE ONLY

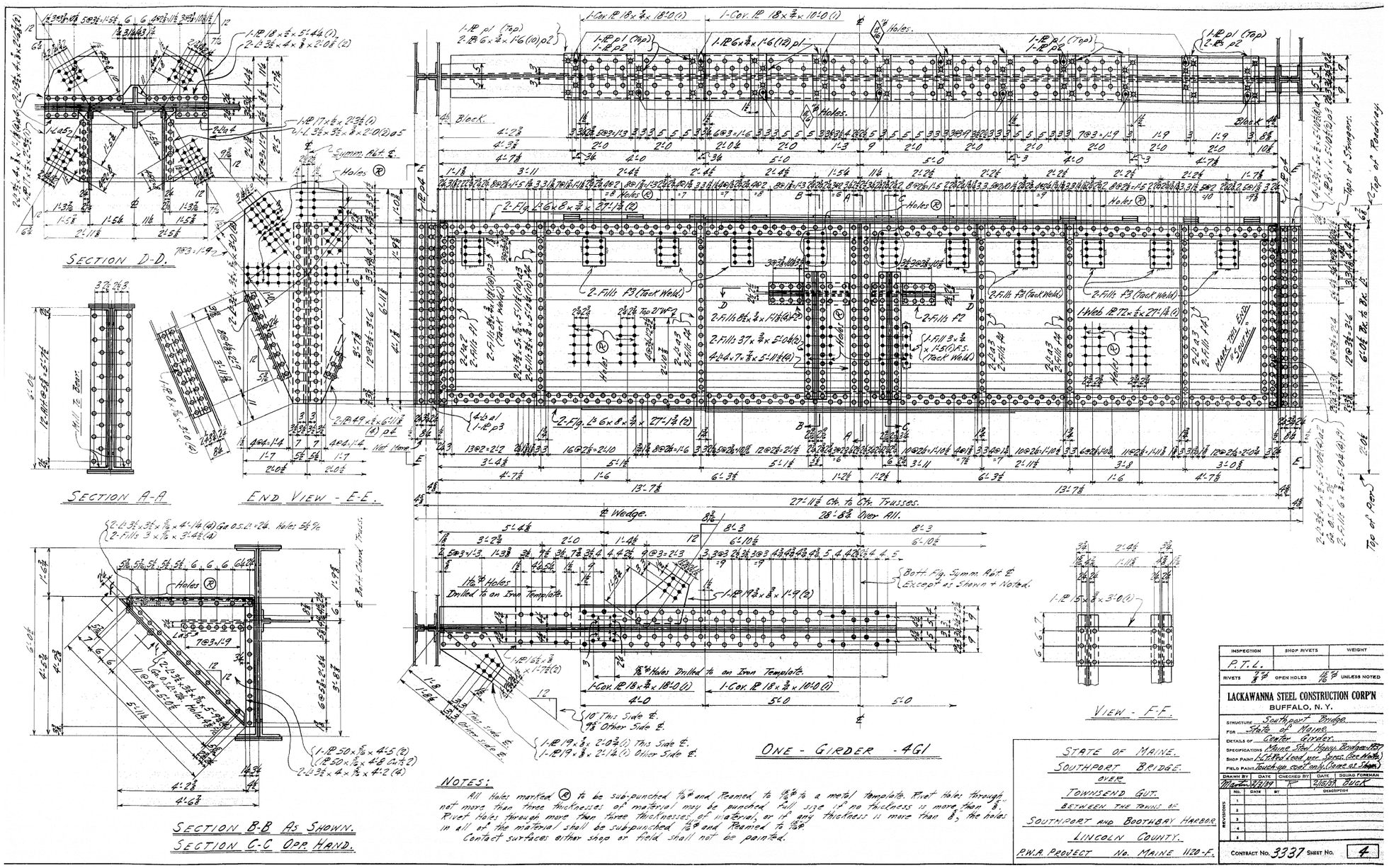

SHEET NOTES

1. This drawing on this sheet is provided as a reference for the Live Load Roller Installation work required on Sheet M9 and Sheet M10. The Contractor is advised that no dimensions or components depicted have been verified and therefore is to use this information at the Contractor's own risk.
2. Full set of Plans is available on the MaineDOT website.

GRESHAM CONSULTING
MOVABLE STRUCTURES ENGINEERS
25 SKUNK HOLLOW ROAD
CHALFONT, PA 18914
www.greshamconsulting.com
(215)997-0645

STATE OF MAINE
DEPARTMENT OF TRANSPORTATION

STP-2175(100)

WIN 21751.00

BRIDGE NO. 2789

BRIDGE PLANS

STATE OF MAINE TIMOTHY C. GREENHALGH 15755 REGISTERED PROFESSIONAL ENGINEER

	BY	DATE
PROJ. MANAGER J. STETSON, PE		
DESIGN-DETAILED	DEL	07-09-22
CHECKED-REVIEWED		
DESIGN2-DETAILED2		
DESIGN3-DETAILED3		
REVISIONS 1		
REVISIONS 2		
REVISIONS 3		
REVISIONS 4		
F.H.D. CHANGES		

DESIGN2-DETAILED2

P.E. NUMBER 16735

08-19-2022 DATE

SOUTHPORT BRIDGE ROUTE 27
OVER TOWNSEND GUT
SOUTHPORT & BOOTHBAY HARBOR ME LINCOLN COUNTY

EXISTING CENTER (PIVOT) GIRDER
DETAILS REFERENCE DRAWING

SHEET NUMBER

M23

M23 OF M24

FOR REFERENCE ONLY

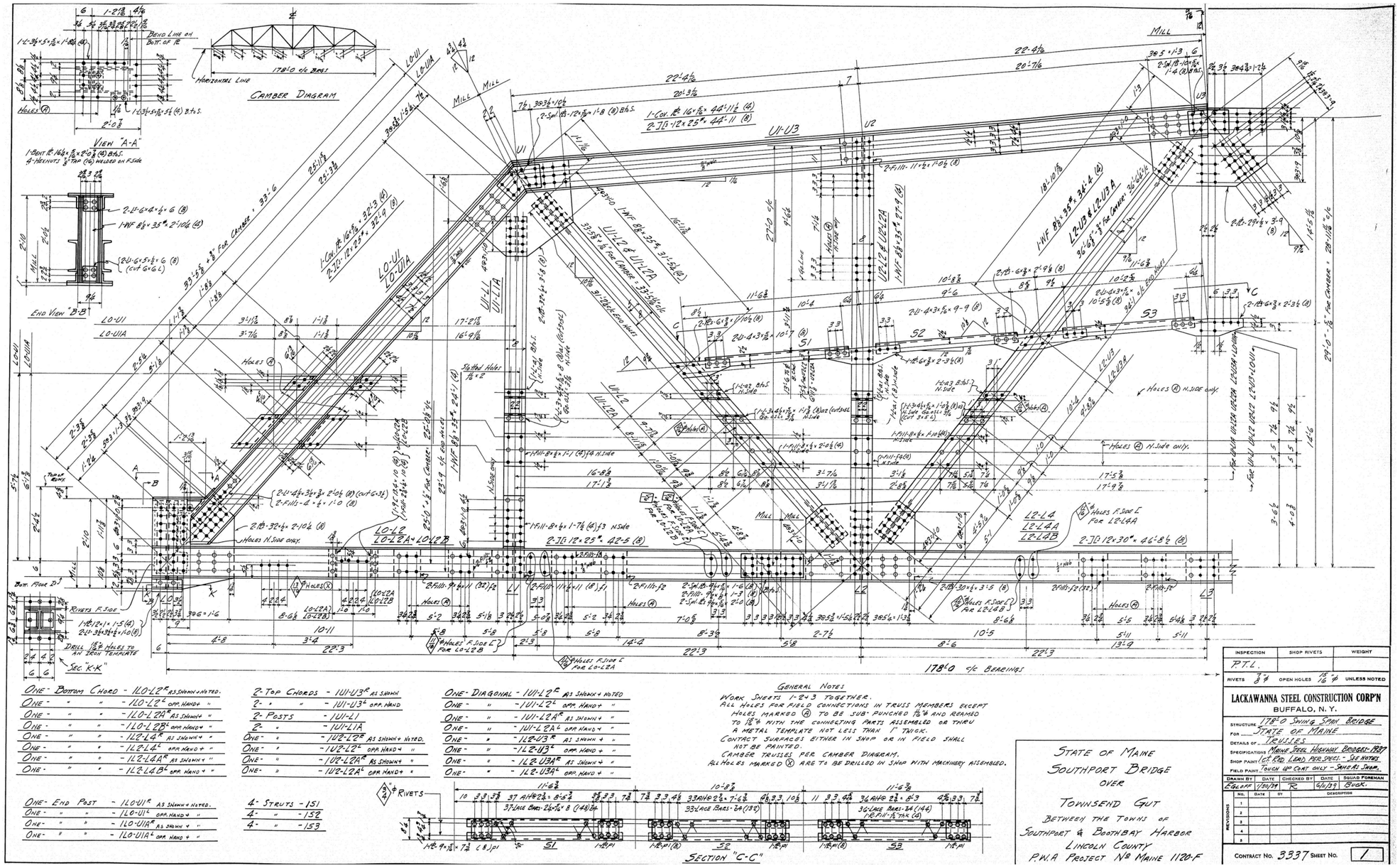

SHEET NOTES

1. This drawing is provided as a reference for the End Seat Installation work required on Sheets M11 to M14. The Contractor is advised that no dimensions or components depicted have been verified and therefore is to use this information at the Contractor's own risk.
2. Full set of Plans is available on the MaineDOT website.

GRESHAM CONSULTING
MOVABLE STRUCTURES ENGINEERS
25 SKUNK HOLLOW ROAD
CHALFONT, PA 18914
www.greshamconsulting.com
(215)997-0645

STATE OF MAINE
DEPARTMENT OF TRANSPORTATION

STP-2175(100)

BRIDGE NO. 2789

WIN 21751.00

BRIDGE PLANS

STATE OF MAINE TIMOTHY C. GREENHALL 16735 REGISTERED PROFESSIONAL ENGINEER

PROJ. MANAGER	J. STETSON, PE		
DESIGN-DETAILED	BY	DATE	
CHECKED-REVIEWED	ERA	07-09-22	
DESIGN2-DETAILED2			
DESIGN3-DETAILED3			
REVISIONS 1			
REVISIONS 2			
REVISIONS 3			
REVISIONS 4			
FIELD CHANGES			

DESIGN2-DETAILED2
16735
P.E. NUMBER
08-19-2022
DATE

SOUTHPORT BRIDGE ROUTE 27
OVER TOWNSEND GUT
SOUTHPORT & BOOTHBAY HARBOR ME LINCOLN COUNTY

EXISTING TRUSS DETAILS
REFERENCE DRAWING

SHEET NUMBER

M24

M24 OF M24