# STATE OF MAINE
# DEPARTMENT OF TRANSPORTATION

## SPECIFICATIONS

Design: Load and Resistance Factor Design per AASHTO LRFD Bridge Design Specifications, Eighth Edition 2017.

## DESIGN LOADING

Live Load ..... HL - 93 Modified for Strength I

## TRAFFIC DATA

| | |
|---|---|
| Current (2017) AADT | 7,300 |
| Future (2037) AADT | 8,180 |
| DHV - % of AADT | 13% |
| Design Hour Volume | 1063 |
| Heavy Trucks (% of AADT) | 6% |
| Heavy Trucks (% of DHV) | 4% |
| Directional Distribution (% of DHV) | 53% |
| 18 kip Equivalent P 2.0 | 321 |
| 18 kip Equivalent P 2.5 | 306 |
| Design Speed (mph) | 50 |

## HYDROLOGIC DATA

| | |
|---|---|
| Headwater Elevation (Q10) | 373.53 ft |
| Headwater Elevation (Q50) | 376.53 ft |
| Headwater Elevation (Q100) | 379.53 ft |

## MATERIALS

| | |
|---|---|
| Concrete: | |
| Curbs & Transition Barriers | Class "LP" |
| Precast | Class "P" |
| All Other | Class "A" |
| Reinforcing Steel | |
| Plain | ASTM A 615/A 615M, Grade 60 |
| Stainless Steel | ASTM A 995/A 995M, Grade 75 |
| Structural Steel: | |
| H-Piles | ASTM A 572/A572M, Grade 50 |

## BASIC DESIGN STRESSES

| | |
|---|---|
| Concrete, Class "A" | f 'c = 4,000 psi |
| Concrete, Class "LP" | f 'c = 5,000 psi |
| Concrete, Class "P" | f 'c = 8,000 psi |
| | f 'ci = 6,000 psi |
| Reinforcing Steel: | |
| ASTM A615, Grade 60 | f y = 60,000 psi |
| ASTM A995, Grade 75 | f y = 75,000 psi |
| Structural Steel: | |
| ASTM A 572, Grade 50 | F y = 50,000 psi |

## UTILITIES

| | |
|---|---|
| FairPoint Communications | Oxford Networks |
| Central Maine Power | Time Warner Cable |

## MAINTENANCE OF TRAFFIC

Maintain one lane of alternating one-way traffic on the existing and proposed bridge during staged construction. Traffic will be controlled by temporary traffic signals.

# FRYEBURG
# OXFORD COUNTY
# EDDY FLATS BRIDGE
## OVER
# SACO RIVER OVERFLOW
## U.S. ROUTE 302
## FEDERAL AID PROJECT NO. BR-1791(200)X
## PROJECT LENGTH 0.03 mi.
## BRIDGE NO. 2261

## LIST OF DRAWINGS


| | |
|---|---|
| Title Sheet | B1 |
| Estimated Quantities and General Construction Notes | B2 |
| General Plan | B3 |
| Profile | B4 |
| Boring Location Plan | B5 |
| Interpretive Subsurface Profile | B6-B7 |
| Boring Logs | B8-B9 |
| Typical Sections | B10 |
| Highway Cross Sections | B11-B12 |
| Staged Construction | B13 |
| Abutments | B14-B17 |
| Precast NEXT Beams | B18-B19 |
| Superstructure Plan | B20 |
| Superstructure Details | B21 |
| Reinforcing Schedule | B22 |


| | |
|---|---|
| PROJECT LOCATION | Located in the on Bridgton Road (Route 302) approximately 0.40 miles westerly of Stanley Hill Road.<br>Lat./Long. 44°01'46" N 70°54'16" W |
| PROGRAM AREA | Bridge |
| OUTLINE OF WORK | Bridge Replacement |

WIN 17912.00

STATE OF MAINE
DEPARTMENT OF TRANSPORTATION

| | | DATE |
|---|---|---|
| APPROVED | COMMISSIONER: | 12/17/18 |
| | CHIEF ENGINEER: | 12-17-18 |

STATE OF MAINE ★ Roger M. Naous 9918 ★ LICENSED PROFESSIONAL ENGINEER

SIGNATURE: 12/13/18
P.E. NUMBER
DATE DEC 13 2018

PROJECT INFORMATION

| | |
|---|---|
| PROGRAM | BRIDGE |
| PROJECT MANAGER | J. STILWELL |
| DESIGNER | R. NAOUS |
| CONSULTANT | |
| PROJECT RESIDENT | |
| CONTRACTOR | |
| PROJECT COMPLETION DATE | |

FRYEBURG
EDDY FLATS BRIDGE

TITLE SHEET

SHEET NUMBER
B1
OF B22

Filename:\00\BRIDGE\MSTA\0B1_Title.dgn Division: BRIDGE Username: sjwilliams Date:12/11/2018

ESTIMATED QUANTITIES

| ITEM NO. | DESCRIPTION | | QUANTITY | UNITS |
|---|---|---|---|---|
| 202.19 | REMOVING EXISTING BRIDGE | (390 CY) | 1 | LS |
| | | | | |
| 203.25 | GRANULAR BORROW | | 410 | CY |
| | | | | |
| 206.082 | STRUCTURAL EARTH EXCAVATION - MAJOR STRUCTURES, PLAN QUANTITY | | 260 | CY |
| | | | | |
| 501.231 | DYNAMIC LOADING TEST | | 2 | EA |
| 501.50 | STEEL H-BEAM PILES 89 LB/FT, DELIVERED | | 1135 | LF |
| 501.501 | STEEL H-BEAM PILES 89 LB/FT, IN PLACE | | 1095 | LF |
| 501.90 | PILE TIPS | | 10 | EA |
| 501.91 | PILE SPLICES | | 20 | EA |
| 501.92 | PILE DRIVING EQUIPMENT MOBILIZATION | | 1 | LS |
| | | | | |
| 502.219 | STRUCTURAL CONCRETE, ABUTMENTS AND RETAINING WALLS | (95 CY) | 1 | LS |
| 502.261 | STRUCTURAL CONCRETE ROADWAY AND SIDEWALK SLAB ON CONCRETE BRIDGES | (78 CY) | 1 | LS |
| 502.31 | STRUCTURAL CONCRETE APPROACH SLAB | (26 CY) | 1 | LS |
| 502.49 | STRUCTURAL CONCRETE CURBS AND SIDEWALKS | (8 CY) | 1 | LS |
| | | | | |
| 503.12 | REINFORCING STEEL, FABRICATED AND DELIVERED | | 19600 | LB |
| 503.13 | REINFORCING STEEL, PLACING | | 19600 | LB |
| 503.17 | MECHANICAL/WELDED SPLICE | | 66 | EA |
| 503.26 | STAINLESS STEEL REINFORCEMENT, FABRICATED AND DELIVERED | | 15200 | LB |
| 503.27 | STAINLESS STEEL REINFORCEMENT, PLACING | | 15200 | LB |
| | | | | |
| 507.0821 | STEEL BRIDGE RAILING, 3 BAR | (98 LF) | 1 | LS |
| | | | | |
| 508.14 | HIGH PERFORMANCE WATERPROOFING MEMBRANE | (260 SY) | 1 | LS |
| | | | | |
| 511.07 | COFFERDAM ABUTMENT 1 | | 1 | LS |
| 511.07 | COFFERDAM ABUTMENT 2 | | 1 | LS |
| | | | | |
| 514.06 | CURING BOX FOR CONCRETE CYLINDERS | | 1 | EA |
| | | | | |
| 515.21 | PROTECTIVE COATING FOR CONCRETE SURFACES | (120 SY) | 1 | LS |
| | | | | |
| 520.232 | EXPANSION DEVICE - ASPHALTIC PLUG JOINT | | 68 | LF |
| | | | | |
| 524.301 | TEMPORARY STRUCTURAL SUPPORT - ROADWAY SUPPORT | | 1 | LS |
| | | | | |
| 526.301 | TEMPORARY CONCRETE BARRIER | (400 LF) | 1 | LS |
| 526.305 | TEMPORARY CONCRETE BARRIER , BRACED TYPE I | (160 LF) | 1 | LS |
| 526.34 | PERMANENT CONCRETE TRANSITION BARRIER | | 4 | EA |
| | | | | |
| 527.34 | WORK ZONE CRASH CUSHIONS | | 4 | UN |
| | | | | |
| 535.622 | PRESTRESSED STRUCTURAL CONCRETE NEXT BEAM | (70 CY) | 1 | LS |
| | | | | |
| 606.1307 | BRIDGE TRANSITION (ASYMMETRICAL) - TYPE 1 | | 4 | EA |
| | | | | |
| 610.08 | PLAIN RIPRAP | | 2200 | CY |
| | | | | |
| 613.319 | EROSION CONTROL BLANKET | | 94 | SY |
| | | | | |
| 620.58 | EROSION CONTROL GEOTEXTILE | | 2200 | SY |
| 620.66 | DRAINAGE GEOCOMPOSITE | | 90 | SY |
| | | | | |
| 629.05 | HAND LABOR, STRAIGHT TIME | | 35 | HR |
| | | | | |
| 631.121 | HEAVY DUTY ALL-PURPOSE EXCAVATOR (INCLUDING OPERATOR) | | 20 | HR |
| | | | | |
| 643.72 | TEMPORARY TRAFFIC SIGNAL | | 0.5 | LS |
| | | | | |
| 652.312 | TYPE III BARRICADES | | 4 | EA |
| 652.33 | DRUM | | 50 | EA |
| 652.34 | CONE | | 100 | EA |
| 652.35 | CONSTRUCTION SIGNS | | 150 | SF |
| 652.38 | FLAGGERS | | 430 | HR |
| 652.41 | PORTABLE-CHANGEABLE MESSAGE SIGN | | 2 | EA |
| | | | | |
| 659.10 | MOBILIZATION | | 1 | LS |
| | | | | |

## GENERAL CONSTRUCTION NOTES

1. For easements, construction limits and right of way lines, refer to Right of Way Map.

2. The clearing limits as shown on the plans are approximate. The exact limits will be established in the field by the Resident. Payment for clearing will be considered incidental to Contract items.

3. All utility facilities shall be adjusted by the respective utilities unless otherwise noted.

4. Do not excavate for Aggregate Subbase Course where existing material is suitable as determined by the Resident.

5. In areas where the Resident directs the Contractor not to excavate to the subgrade line shown on the plans, payment for removing existing pavement, grubbing, shaping, ditching, and compacting the existing subbase and layers of new subbase 6 inches or less thick will be made under appropriate equipment rental items.

6. All embankment material, except as otherwise shown, placed below EL. 380.00 shall be Granular Borrow meeting the requirements of Subsection 703.19, Material for Underwater Backfill.

7. Place riprap on sideslopes up to EL. 377.00.

8. Construct the riprap shelf at Abutment No. 1 and 2 at EL. 376.00.

9. Place loam 2 inches deep on all new or reconstructed sideslopes or as directed by the Resident.

10. Erosion Control Mix may be substituted in those areas normally receiving loam and seed as directed by the Resident. Placement shall be in accordance with Standard Specifications Section 619, Mulch. Payment will be made under Item No. 619.14, Erosion Control Mix as part of WIN 17280.00.

11. Place a 24-in. wide strip of Temporary Erosion Control Blanket on the sideslopes along the top of the riprap and behind the wingwalls.

12. An NCHRP350 or MASH compliant guardrail end treatment shall be installed concurrently with the placement of each section of beam guardrail.

13. Protective Coating for Concrete Surfaces shall be applied to the following areas:

All exposed surfaces of concrete curbs.
Fascias down to the drip notch.
All exposed surfaces of Concrete Transition Barriers.
Top of abutment backwalls and to one foot below the top of backwalls on the back side.
Top face and exposed back surface of wingwalls.

14. Project information referred to below may be accessed at the following MaineDOT web address: http://www.maine.gov/mdot/contractors/.

15. The existing bridge plans may be accessed at the MaineDOT web address. The plans are reproductions of the original drawings as prepared for the construction of the bridge. It is very unlikely that the plans will show any construction field changes or any alterations which may have been made to the bridge during its life span.

16. The hydrologic information listed on the title sheet for the bridge site is based on MaineDOT's interpretation of the information obtained for the subject site. No assurance is given that the information will be representative of actual conditions at the time of construction.

17. The project geotechnical report titled: Geotechnical Design Report Eddy Flats Bridge NO. 2261 over Saco River Overflow, Soils Report 2018-31, August 29, 2018 may be accessed at the MaineDOT web address.

18. Geotechnical information furnished or referred to in this plan set is for the use of the Bidders and the Contractor. No assurance is given that the information or interpretations will be representative of actual subsurface conditions at the construction site. MaineDOT will not be responsible for the Bidders' or Contractor's interpretations of, or conclusions drawn from, the geotechnical information. The boring logs contained in the plan set present factual and interpretive subsurface information collected at discrete locations. Data provided may not be representative of the subsurface conditions between the boring locations.

19. Quantities included for pay items measured and paid for by Lump Sum are estimated quantities and are provided by MaineDOT for informational purposes only. Lump Sum pay items will be paid for at the Contract Bid amount, with no addition or reduction in payment to the Contractor if the actual final quantities are different from the MaineDOT provided estimated quantities, except as follows:

a. If a Lump Sum pay item is eliminated, the requirements of Standard Specifications Section 109.2, Elimination of Items, will take precedence.

b. If other Contract Documents specifically allow a change in payment for a Lump Sum pay item, those requirements will be followed.

c. If a design change results in changes to estimated quantities for Lump Sum pay items, price adjustments will be made in accordance with Standard Specifications Section 109.7, Equitable Adjustments to Compensation.

20. Install two layers of 6 mil polyethylene sheeting under approach slabs. Payment will be considered incidental to Item No. 502.31, Structural Concrete Approach Slab.

21. Transverse saw cuts in the pavement at the ends of approach slabs shall be sealed with emulsified asphalt sealing compound conforming to Specification 702.12. The saw cut and emulsified asphalt sealing shall not be paid for directly, but considered incidental to related Contract Items.

22. Vertical project limits between WIN 17912.00 and WIN 17280.00 are shown in the Bridge Profile. All Items above the bottom of the subbase course gravel and approach slabs within the bridge project limits and embankment construction outside of the granular borrow and riprap limits shall be paid for as part of WIN 17280.00. High Performance Waterproofing Membrane, Permanent Concrete Transition Barriers and Bridge Guardrail Transitions are included under WIN 17912.00.

STATE OF MAINE
DEPARTMENT OF TRANSPORTATION

STP-1791(200)

WIN 17912.00

BRIDGE NO. 2261

BRIDGE PLANS

| | | BY | DATE |
|---|---|---|---|
| PROJ. MANAGER | J. STILWELL | | |
| DESIGN-DETAILED | RMN | DJB/LSF | DEC 2018 |
| CHECKED-REVIEWED | JGS | SJW | DEC 2018 |
| DESIGN2-DETAILED2 | | | |
| DESIGN3-DETAILED3 | | | |
| REVISIONS 1 | | | |
| REVISIONS 2 | | | |
| REVISIONS 3 | | | |
| REVISIONS 4 | | | |
| FIELD CHANGES | | | |

SIGNATURE

P.E. NUMBER

DATE

EDDY FLATS BRIDGE
SACO RIVER OVERFLOW
FRYEBURG OXFORD COUNTY

ESTIMATED QUANTITIES & CONSTRUCTION NOTES

SHEET NUMBER

B2

OF B22

Filename: ...\MSTA\OB2_Quantities_Notes.dgn Division: BRIDGE Username: lflanders Date:12/14/2018

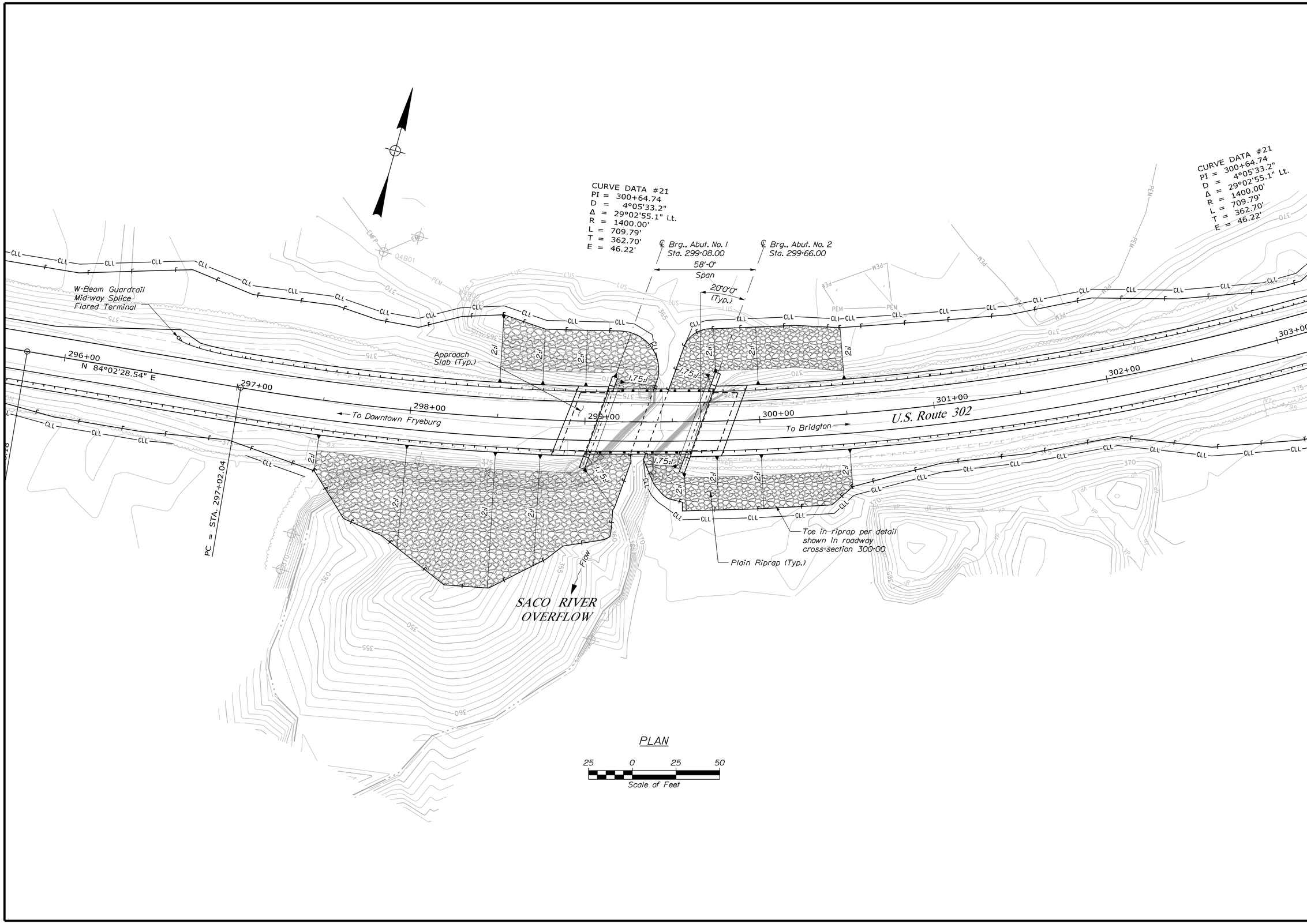


Filename: ...\00\BRIDGE\MSTA\0B3_BPlan.dgn Division: BRIDGE Username: lflanders Date:12/14/2018

STATE OF MAINE
DEPARTMENT OF TRANSPORTATION

STP-1791(200)

WIN
17912.00

BRIDGE NO. 2261

BRIDGE PLANS

| | | BY | DATE |
|---|---|---|---|
| PROJ. MANAGER | J. STILWELL | | |
| DESIGN-DETAILED | RMN | DJB\LSF | DEC 2018 |
| CHECKED-REVIEWED | JGS | SJW | DEC 2018 |
| DESIGN2-DETAILED2 | | | |
| DESIGN3-DETAILED3 | | | |
| REVISIONS 1 | | | |
| REVISIONS 2 | | | |
| REVISIONS 3 | | | |
| REVISIONS 4 | | | |
| FIELD CHANGES | | | |

SIGNATURE

P.E. NUMBER

DATE

EDDY FLATS BRIDGE
SACO RIVER OVERFLOW
FRYEBURG OXFORD COUNTY

PLAN

SHEET NUMBER

B3

OF B22

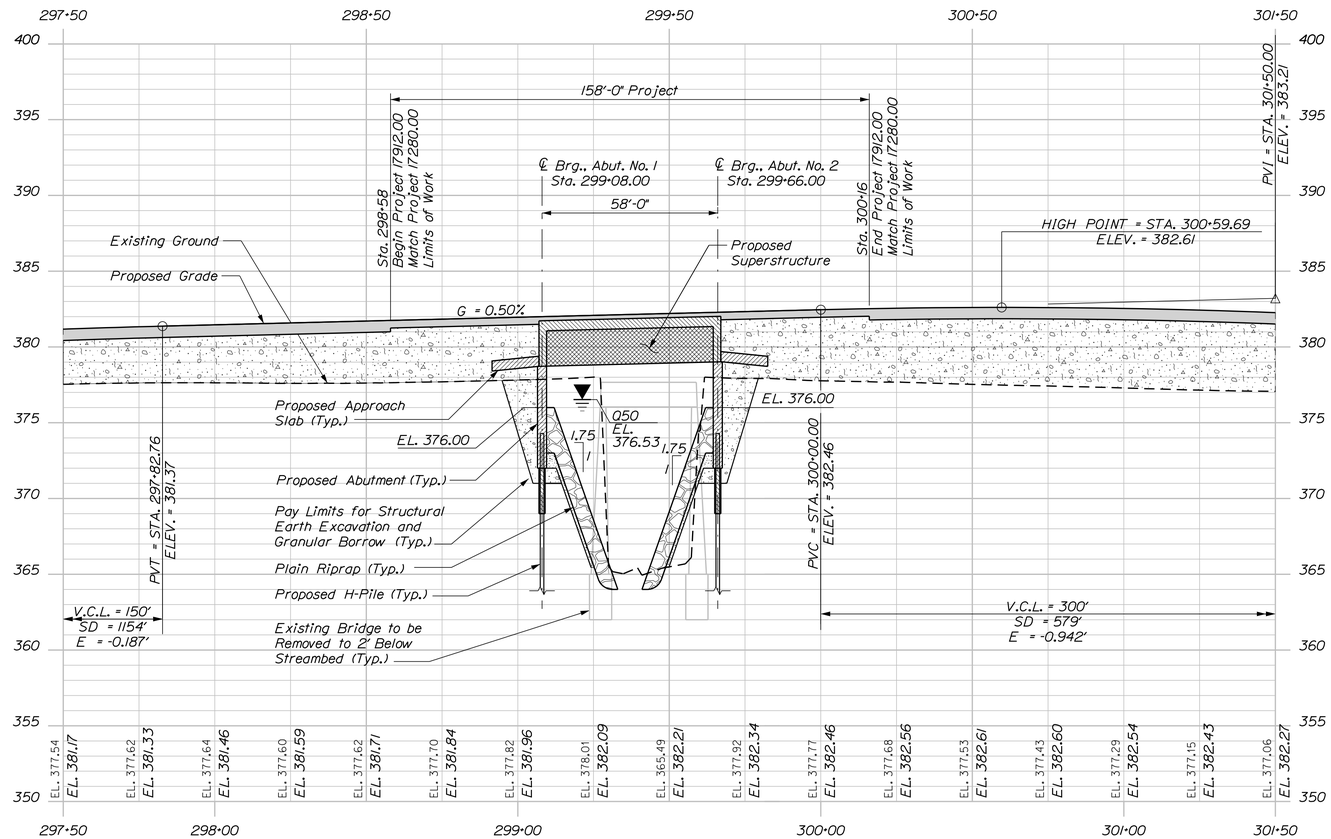


## EDDY FLATS BRIDGE PROFILE

Horiz. 25 0 25 50

Vert. 5 0 5 10

Scale of Feet

## NOTES

1. See General Construction Notes for horizontal project limits between WIN 17280.00 and WIN 17912.00.

Filename: ...\00\BRIDGE\MSTA\0B4_Profile.dgn Division: BRIDGE Username: lflanders Date:12/14/2018

STATE OF MAINE
DEPARTMENT OF TRANSPORTATION

STP-1791(200)

WIN 17912.00

BRIDGE NO. 2261

BRIDGE PLANS

| | | BY | DATE |
|---|---|---|---|
| PROJ. MANAGER | J. STILWELL | | |
| DESIGN-DETAILED | RMN | DJB/LSF | DEC 2018 |
| CHECKED-REVIEWED | JGS | SJW | DEC 2018 |
| DESIGN2-DETAILED2 | | | |
| DESIGN3-DETAILED3 | | | |
| REVISIONS 1 | | | |
| REVISIONS 2 | | | |
| REVISIONS 3 | | | |
| REVISIONS 4 | | | |
| FIELD CHANGES | | | |

SIGNATURE

P.E. NUMBER

DATE

EDDY FLATS BRIDGE
SACO RIVER OVERFLOW
FRYEBURG OXFORD COUNTY

PROFILE

SHEET NUMBER

B4

OF B22

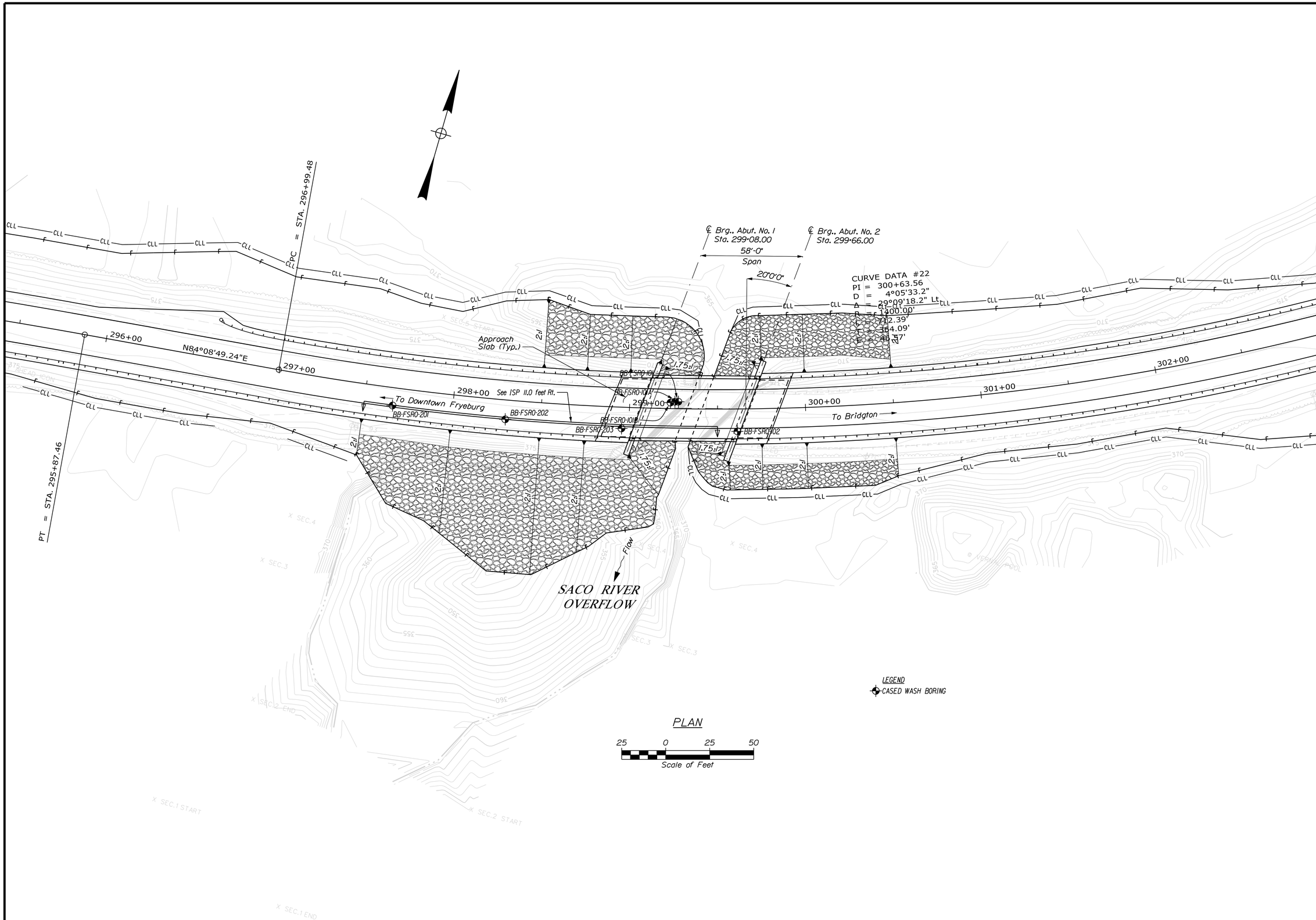


STATE OF MAINE
DEPARTMENT OF TRANSPORTATION

BR-1791(200)X

PIN 17912.00

BRIDGE NO. 2261

BRIDGE PLANS

| | | BY | DATE |
|---|---|---|---|
| PROJ. MANAGER | M. P-PRLIN | | |
| DESIGN-DETAILED | R. NAOUS | M. LACHANCE | APR 2017 |
| CHECKED-REVIEWED | ----- | ----- | ----- |
| DESIGN2-DETAILED2 | N.SHERWOOD | T.WHITE | ----- |
| DESIGN3-DETAILED3 | ----- | ----- | ----- |
| REVISIONS 1 | ----- | ----- | ----- |
| REVISIONS 2 | ----- | ----- | ----- |
| REVISIONS 3 | ----- | ----- | ----- |
| REVISIONS 4 | ----- | ----- | ----- |
| FIELD CHANGES | ----- | ----- | ----- |

SIGNATURE

P.E. NUMBER

DATE

EDDY FLATS BRIDGE
SACO RIVER OVERFLOW
FRYEBURG OXFORD COUNTY

BORING LOCATION PLAN

SHEET NUMBER

B5

OF B22

Filename: ...\00\GEOTECH\MSTA\005_BLP1.dgn Division: GEOTECH Username: Laura.Krusinski Date:12/7/2018

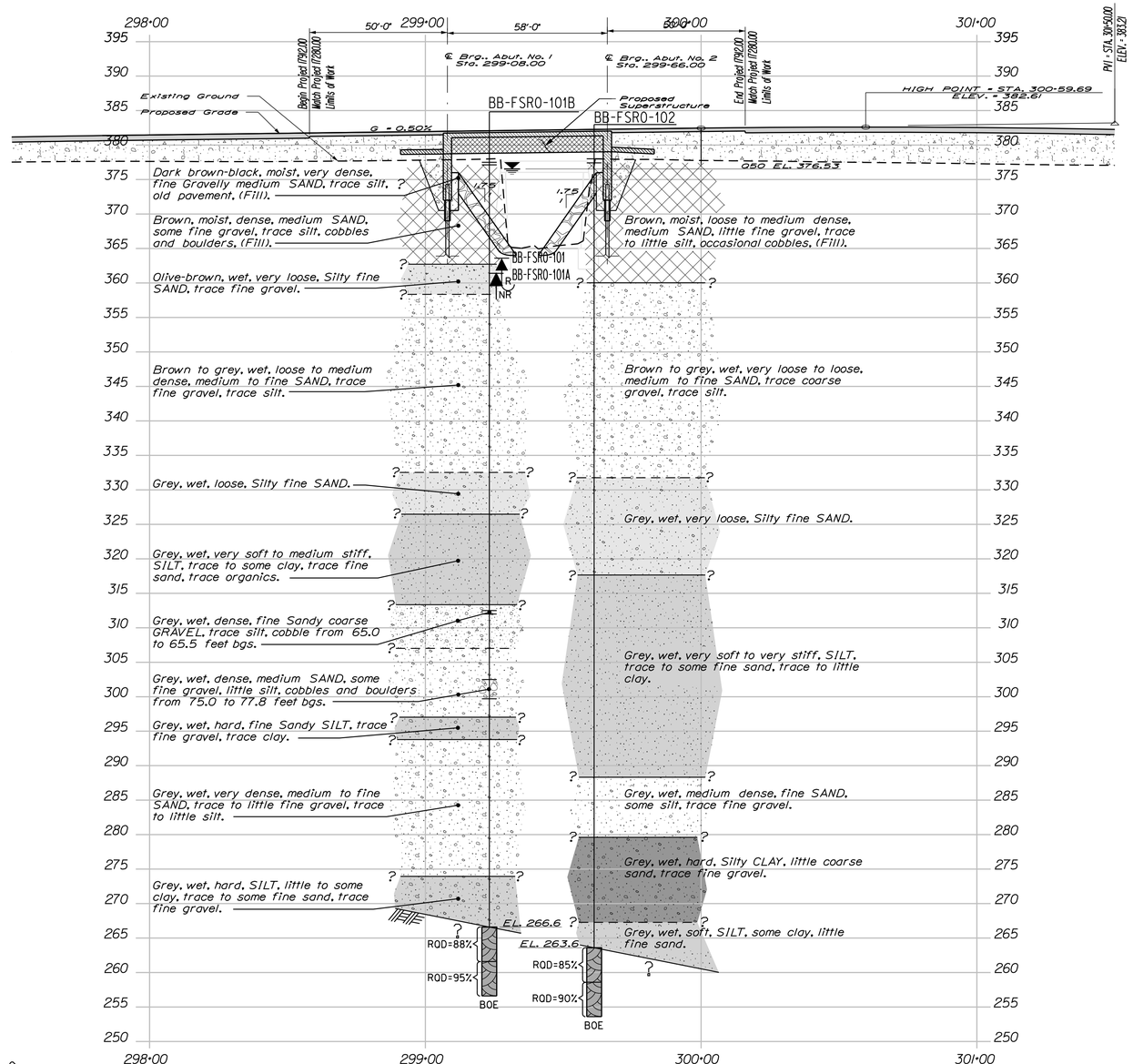


## LEGEND

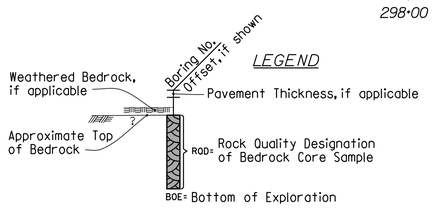


No Refusal

NR

Refusal

R

## PROFILE

Horiz. 25 0 25 50

Vert. 10 0 10 20

Scale of Feet

Vertical scale has been reduced ½ times its original.

Note: This generalized interpretive soil profile is intended to convey trends in subsurface conditions. The boundaries between strata are approximate and idealized, and have been developed by interpretations of widely spaced explorations and samples. Actual soil and bedrock transitions may vary and are probably more erratic. For more specific information refer to the exploration logs.

STATE OF MAINE
DEPARTMENT OF TRANSPORTATION

BR-1791(200)X

PIN 17912.00

BRIDGE NO. 2261

BRIDGE PLANS

| | | BY | DATE |
|---|---|---|---|
| PROJ. MANAGER | M. PARLIN | | |
| DESIGN-DETAILED | R. NAOUS | M. LACHANCE | APR 2017 |
| CHECKED-REVIEWED | ----- | ----- | ----- |
| DESIGN2-DETAILED2 | N.SHERWOOD | T.WHITE | ----- |
| DESIGN3-DETAILED3 | ----- | ----- | ----- |
| REVISIONS 1 | ----- | ----- | ----- |
| REVISIONS 2 | ----- | ----- | ----- |
| REVISIONS 3 | ----- | ----- | ----- |
| REVISIONS 4 | ----- | ----- | ----- |
| FIELD CHANGES | ----- | ----- | ----- |

SIGNATURE

P.E. NUMBER

DATE

EDDY FLATS BRIDGE
SACO RIVER OVERFLOW
FRYEBURG OXFORD COUNTY

# INTERPRETIVE SUBSURFACE PROFILE

SHEET NUMBER

B6

OF B22

Filename: ...\00\GEOTECH\MSTA\006_ISP1.dgn Division: GEOTECH Username: Laura.Krusinski Date:12/7/2018

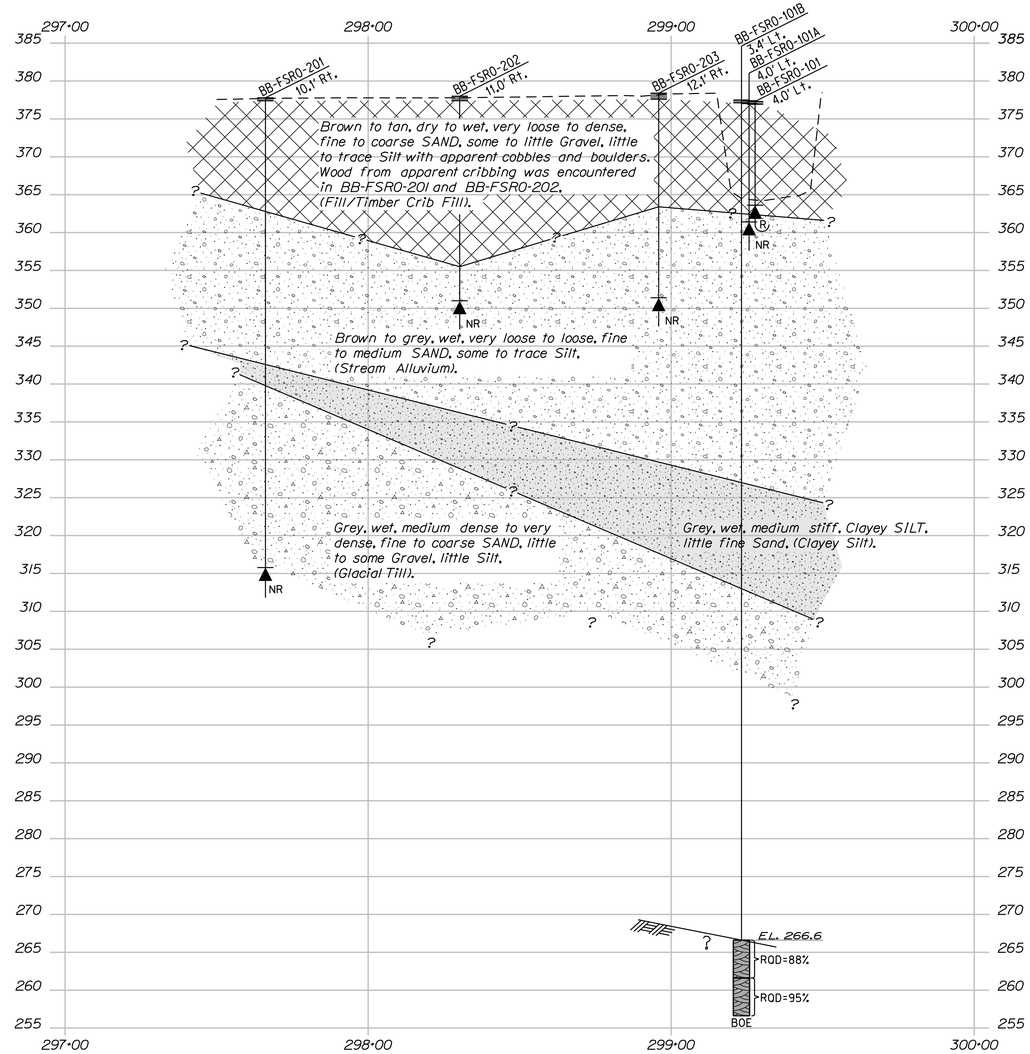


PROFILE - 11.0 feet Rt. of ℄ Construction

Horiz. 25 0 25 50

Vert. 10 0 10 20

Scale of Feet

Vertical scale has been reduced ½ times its original.

LEGEND

Weathered Bedrock, if applicable

Boring No.

Offset, if shown

Pavement Thickness, if applicable

Approximate Top of Bedrock

RQD= Rock Quality Designation of Bedrock Core Sample

BOE= Bottom of Exploration

NR No Refusal

R Refusal

Note: This generalized interpretive soil profile is intended to convey trends in subsurface conditions. The boundaries between strata are approximate and idealized, and have been developed by interpretations of widely spaced explorations and samples. Actual soil and bedrock transitions may vary and are probably more erratic. For more specific information refer to the exploration logs.

STATE OF MAINE
DEPARTMENT OF TRANSPORTATION

BR-1791(200)X

PIN 17912.00

BRIDGE NO. 2261

BRIDGE PLANS

| | | BY | DATE |
|---|---|---|---|
| PROJ. MANAGER | M. PARLIN | | |
| DESIGN-DETAILED | B.CARDALI | ---- | MAY 2018 |
| CHECKED-REVIEWED | C.SNOW | A.BLASDELL | MAY 2018 |
| DESIGN2-DETAILED2 | ---- | T.WHITE | MAY 2018 |
| DESIGN3-DETAILED3 | ---- | ---- | ---- |
| REVISIONS 1 | ---- | ---- | ---- |
| REVISIONS 2 | ---- | ---- | ---- |
| REVISIONS 3 | ---- | ---- | ---- |
| REVISIONS 4 | ---- | ---- | ---- |
| FIELD CHANGES | ---- | ---- | ---- |

SIGNATURE

P.E. NUMBER

DATE

EDDY FLATS BRIDGE
SACO RIVER OVERFLOW
FRYEBURG OXFORD COUNTY

INTERPRETIVE SUBSURFACE PROFILE
11.0 feet Rt.

SHEET NUMBER

B7

OF B22

Filename: ...\MSTA\007_ISP2 11 RT.dgn Division: GEOTECH Username: Laura.Krusinski Date:12/7/2018

Filename: ...\MSTA\008_BORING LOGS1.dgn Division: GEOTECH Username: Laura.Krusinski Date:12/7/2018

## Maine Department of Transportation
Soil/Rock Exploration Log
US CUSTOMARY UNITS

Project: Eddy Flats Bridge #2261 Route 302 Over Saco River Location: Fryeburg, Maine

Boring No.: BB-FSR0-201
WIN: 017912.00

| | | | | | |
|---|---|---|---|---|---|
| Driller: | New England Boring Contractors | Elevation (ft.) | 377.8 | Auger ID/OD: | 4.25" OD |
| Operator: | Mike Porter | Datum: | NAVD 88 | Sampler: | Split Spoon |
| Logged By: | B. Cardoli | Rig Type: | Truck | Hammer Wt./Fall: | 140/30 |
| Date Start/Finish: | 03-19-18 / 03-20-18 | Drilling Method: | Drive & Wash | Core Barrel: | -- |
| Boring Location: | Sta. 297+46.1, 10.1 ft RT | Casing ID/OD: | 4" / 5" | Water Level*: | 12.7' |
| Hammer Efficiency Factor: 0.865 | | Hammer Type: | Automatic ☒ Hydraulic ☐ Rope & Cathead ☐ | | |

Definitions:
D = Split Spoon Sample; MD = Unsuccessful Split Spoon Sample Attempt; U = Thin Wall Tube Sample; MU = Unsuccessful Thin Wall Tube Sample Attempt; V = Field Vane Shear Test, PP = Pocket Penetrometer; MV = Unsuccessful Field Vane Shear Test Attempt; R = Rock Core Sample; SSA = Solid Stem Auger; HSA = Hollow Stem Auger; RC = Roller Cone; WOH = Weight of 140lb. Hammer; WOR/C = Weight of Rods or Casing; WO1P = Weight of One Person; $S_u$ = Peak/Remolded Field Vane Undrained Shear Strength (psf); $S_{u(lab)}$ = Lab Vane Undrained Shear Strength (psf); $q_p$ = Unconfined Compressive Strength (ksf); N-uncorrected = Raw Field SPT N-value; Hammer Efficiency Factor = Rig Specific Annual Calibration; $N_{60}$ = SPT N-uncorrected Corrected for Hammer Efficiency; $N_{60}$ = (Hammer Efficiency Factor/60%)*N-uncorrected; $T_v$ = Pocket Torvane Shear Strength (psf); WC = Water Content, percent; LL = Liquid Limit; PL = Plastic Limit; PI = Plasticity Index; G = Grain Size Analysis; C = Consolidation Test

| Depth (ft.) | Sample No. | Pen./Rec. (in.) | Sample Depth (ft.) | Blows (/6 in.) Shear Strength (psf) or RQD (%) | N-uncorrected | $N_{60}$ | Casing Blows | Elevation (ft.) | Visual Description and Remarks | Laboratory Testing Results/ AASHTO and Unified Class |
|---|---|---|---|---|---|---|---|---|---|---|
| 0 | | | | | | | SSA | 377.4 | ~ASPHALT~ 0.4 | |
| | 10 | 24/13 | 0.40 - 2.40 | 9-10-10-63 | 20 | 29 | SSA | | Dark brown/tan, medium dense, fine to coarse SAND, little Gravel, trace Silt, dry. ~FILL~ (SW) Probable cobble/boulder from 3.1-3.8 ft. | |
| 5 | 20 | 23/16 | 5.00 - 6.92 | 10-10-38-100/5" | 48 | 70 | 492 | | Dark brown/tan, very dense, fine to coarse SAND, some Gravel, trace Silt, moist, with a piece of asphalt, petroleum odor. ~FILL~ (SW) Probable cobble/boulder from 6.9-7.6 ft. | |
| | | | | | | | 66 | | | |
| | | | | | | | 120 | | | |
| | | | | | | | 72 | | | |
| | | | | | | | 34 | | | |
| 10 | 30 | 24/7 | 10.00 - 12.00 | 13-3-2-2 | 5 | 7 | 20 | | Brown, loose, fine to medium SAND, little Gravel, little Silt, wet. ~FILL~ (SP-SM) | |
| | | | | | | | 19 | | | |
| | | | | | | | 12 | | | |
| | | | | | | | 34 | | | |
| | | | | | | | 54 | | | |
| 15 | 40 | 24/7 | 15.00 - 17.00 | 3-4-3-3 | 7 | 10 | 17 | 362.8 | Orange/brown, loose, fine to medium SAND, trace Silt, wet. -STREAM ALLUVIUM- (SP) 15.0 | |
| | | | | | | | 17 | | | |
| | | | | | | | 23 | | | |
| | | | | | | | 35 | | | |
| | | | | | | | 41 | | | |
| 20 | 50 | 24/1 | 20.00 - 22.00 | 3-3-5-5 | 8 | 12 | 22 | | Orange/brown, medium dense, fine to medium SAND, trace Silt, wet. -STREAM ALLUVIUM- (SP) | |
| | | | | | | | 33 | | | |
| | | | | | | | 44 | | | |
| | | | | | | | 51 | | | |
| | | | | | | | 61 | | | |
| 25 | 60 | 24/2 | 25.00 - 27.00 | 3-2-3-2 | 5 | 7 | 42 | | Tan/grey, loose, fine to coarse SAND, little Silt, wet, with organic odor. -STREAM ALLUVIUM- (SP) | |
| | | | | | | | 37 | | | |
| | | | | | | | 47 | | | |
| | | | | | | | 41 | | | |
| | | | | | | | 44 | | | |
| 30 | 70 | 24/6 | 30.00 - 32.00 | 2-3-2-4 | 5 | 7 | 42 | | Orange/brown, loose, fine to medium SAND, trace Silt, wet. -STREAM ALLUVIUM- (SP) | |
| | | | | | | | 37 | | | |
| | | | | | | | 57 | | | |
| | | | | | | | 60 | | | |
| | | | | | | | 63 | | | |
| 35 | 80 | 24/17 | 35.00 - 37.00 | 2-2-3-2 | 5 | 7 | 50 | 342.6 | Top 2": Grey, fine to coarse SAND, some Silt, wet. 35.2 Bottom 15": Grey, medium stiff, Clayey SILT, little fine Sand, wet. -STREAM ALLUVIUM- | |
| | | | | | | | 55 | | | |
| | | | | | | | 57 | 339.8 | 38.0 | |
| | | | | | | | 68 | | | |
| | | | | | | | 79 | | | |
| 40 | 90 | 24/2 | 40.00 - 42.00 | 16-8-7-14 | 15 | 22 | 45 | | Recovery consisted of gravel stuck in tip of spoon. Probable cobble from 43.9-44.4 ft. | |
| | | | | | | | 54 | | | |
| | | | | | | | 56 | | | |
| | | | | | | | 53 | | | |
| | | | | | | | 57 | | | |
| 45 | 100 | 24/5 | 45.00 - 47.00 | 7-9-7-3 | 16 | 23 | 16 | | Grey, medium dense, fine to coarse SAND, little Gravel, little Silt, wet. -GLACIAL TILL- (SM) | |
| | | | | | | | 37 | | | |
| | | | | | | | 28 | | | |
| | | | | | | | 22 | | | |
| | | | | | | | 34 | | | |
| 50 | 110 | 24/10 | 50.00 - 52.00 | 10-3-5-5 | 8 | 12 | 14 | | Grey, medium dense, fine to coarse SAND, little Gravel, little Silt, wet. -GLACIAL TILL- (SM) | |
| | | | | | | | 14 | | | |
| | | | | | | | 26 | | | |
| | | | | | | | 63 | | | |
| | | | | | | | 58 | | | |
| 55 | 120 | 24/12 | 55.00 - 57.00 | 27-12-14-14 | 26 | 38 | 47 | | Grey, dense, fine to coarse SAND, little Gravel, little Silt, wet. -GLACIAL TILL- (SM) | |
| | | | | | | | 29 | | | |
| | | | | | | | 96 | | | |
| | | | | | | | 213 | | | |
| | | | | | | | 301 | | | |
| 60 | 130 | 24/10 | 60.00 - 62.00 | 77-104-98-92 | >100 | | | | Grey, very dense, fine to coarse SAND, some Gravel, little Silt, wet. -GLACIAL TILL- (SM) | |
| | | | | | | | | 315.8 | 62.0 | |
| | | | | | | | | | Bottom of Exploration at 62.0 feet below ground surface. No refusal. | |
| 65 | | | | | | | | | | |
| 70 | | | | | | | | | | |

Remarks:
1. From 5.0-25.0 ft. wood fragments in wash.
2. 4" casing to 40.0 ft. then 3" casing to 60 ft.

Stratification lines represent approximate boundaries between soil types; transitions may be gradual.
* Water level readings have been made at times and under conditions stated. Groundwater fluctuations may occur due to conditions other than those present at the time measurements were made.

Page 1 of 1
Boring No.: BB-FSR0-201

## Maine Department of Transportation
Soil/Rock Exploration Log
US CUSTOMARY UNITS

Project: Eddy Flats Bridge #2261 Route 302 Over Saco River Location: Fryeburg, Maine

Boring No.: BB-FSR0-202
WIN: 017912.00

| | | | | | |
|---|---|---|---|---|---|
| Driller: | New England Boring Contractors | Elevation (ft.) | 378.0 | Auger ID/OD: | 4.25" OD |
| Operator: | Mike Porter | Datum: | NAVD 88 | Sampler: | Split Spoon |
| Logged By: | B. Cardoli | Rig Type: | Truck | Hammer Wt./Fall: | 140/30 |
| Date Start/Finish: | 03-20-18 / 03-21-18 | Drilling Method: | Drive & Wash, SSA | Core Barrel: | -- |
| Boring Location: | Sta. 298+50.2, 11.0 ft RT | Casing ID/OD: | 4" | Water Level*: | 12.5' |
| Hammer Efficiency Factor: 0.865 | | Hammer Type: | Automatic ☒ Hydraulic ☐ Rope & Cathead ☐ | | |

Definitions:
D = Split Spoon Sample; MD = Unsuccessful Split Spoon Sample Attempt; U = Thin Wall Tube Sample; MU = Unsuccessful Thin Wall Tube Sample Attempt; V = Field Vane Shear Test, PP = Pocket Penetrometer; MV = Unsuccessful Field Vane Shear Test Attempt; R = Rock Core Sample; SSA = Solid Stem Auger; HSA = Hollow Stem Auger; RC = Roller Cone; WOH = Weight of 140lb. Hammer; WOR/C = Weight of Rods or Casing; WO1P = Weight of One Person; $S_u$ = Peak/Remolded Field Vane Undrained Shear Strength (psf); $S_{u(lab)}$ = Lab Vane Undrained Shear Strength (psf); $q_p$ = Unconfined Compressive Strength (ksf); N-uncorrected = Raw Field SPT N-value; Hammer Efficiency Factor = Rig Specific Annual Calibration; $N_{60}$ = SPT N-uncorrected Corrected for Hammer Efficiency; $N_{60}$ = (Hammer Efficiency Factor/60%)*N-uncorrected; $T_v$ = Pocket Torvane Shear Strength (psf); WC = Water Content, percent; LL = Liquid Limit; PL = Plastic Limit; PI = Plasticity Index; G = Grain Size Analysis; C = Consolidation Test

| Depth (ft.) | Sample No. | Pen./Rec. (in.) | Sample Depth (ft.) | Blows (/6 in.) Shear Strength (psf) or RQD (%) | N-uncorrected | $N_{60}$ | Casing Blows | Elevation (ft.) | Visual Description and Remarks | Laboratory Testing Results/ AASHTO and Unified Class |
|---|---|---|---|---|---|---|---|---|---|---|
| 0 | | | | | | | SSA | 377.4 | ~ASPHALT~ 0.6 | |
| | 10 | 24/11 | 1.00 - 3.00 | 20-17-12-14 | 29 | 42 | | | Brown/tan, dense, fine to coarse SAND, little Gravel, trace Silt, dry. ~FILL~ (SW) Cobble from 4.8-5.3 ft. | |
| 5 | 20 | 24/12 | 5.00 - 7.00 | 5-2-3-4 | 5 | 7 | 20 | | Top 3": Brown/tan, fine to coarse SAND, little Gravel, trace Silt, dry. Bottom 9": Tan, loose, fine to coarse SAND, some Gravel, trace Silt, moist. ~FILL~ (SW) Probable cobble/boulder from 8.5-9.1 ft. | |
| | | | | | | | 35 | | | |
| | | | | | | | 138 | | | |
| | | | | | | | R/C | | | |
| | | | | | | | AHEAD | | | |
| 10 | 30 | 24/6 | 10.00 - 12.00 | 10-9-9-51 | 18 | 26 | 53 | | No recovery. | |
| | | | | | | | 183 | | | |
| | | | | | | | 100 | | | |
| | | | | | | | 53 | | | |
| | | | | | | | 66 | | | |
| 15 | | | | | | | R/C | | | |
| | | | | | | | AHEAD | | | |
| | 40 | 24/20 | 17.00 - 19.00 | 10-25-14-45 | 39 | 56 | 181 | 360.6 | Probable boulder from 15.0-16.4 ft. Top 5": Grey, fine to coarse SAND, little Silt, wet. 17.4 | |
| | | | | | | | R/C | | Bottom 15": Wood with horizontal grain. Probable timber cribbing. | |
| | | | | | | | AHEAD | 358.3 | 19.7 | |
| 20 | 50 | 24/18 | 20.00 - 22.00 | 4-18-41-50 | 59 | 85 | OPEN | 358.0 | ~SAND~ 20.0 Wood with horizontal grain. Probable timber cribbing. | |
| | | | | | | | HOLE | | | |
| | | | | | | | | 355.5 | 22.5 | |
| 25 | 60 | 24/18 | 25.00 - 27.00 | 1-2-4-4 | 6 | 9 | | | Brown/orange, loose, fine to medium SAND, little Silt, wet. ~STREAM ALLUVIUM~ (SP) | |
| | | | | | | | | 351.0 | 27.0 | |
| | | | | | | | | | Bottom of Exploration at 27.0 feet below ground surface. No refusal. | |
| 30 | | | | | | | | | | |
| 35 | | | | | | | | | | |
| 40 | | | | | | | | | | |
| 45 | | | | | | | | | | |
| 50 | | | | | | | | | | |

Remarks:
1. Sand in wash from 19.7-20.0 ft.
2. Broke through timber cribbing with roller bit at 22.5 ft.
3. 4" casing to 17.4 ft. then open hole to 25.0 ft.

Stratification lines represent approximate boundaries between soil types; transitions may be gradual.
* Water level readings have been made at times and under conditions stated. Groundwater fluctuations may occur due to conditions other than those present at the time measurements were made.

Page 1 of 1
Boring No.: BB-FSR0-202

## Maine Department of Transportation
Soil/Rock Exploration Log
US CUSTOMARY UNITS

Project: Eddy Flats Bridge #2261 Route 302 Over Saco River Location: Fryeburg, Maine

Boring No.: BB-FSR0-203
WIN: 017912.00

| | | | | | |
|---|---|---|---|---|---|
| Driller: | New England Boring Contractors | Elevation (ft.) | 378.4 | Auger ID/OD: | 4.25" OD |
| Operator: | Mike Porter | Datum: | NAVD 88 | Sampler: | Split Spoon |
| Logged By: | B. Cardoli | Rig Type: | Truck | Hammer Wt./Fall: | 140/30 |
| Date Start/Finish: | 03-21-18 / 03-21-18 | Drilling Method: | Drive & Wash, SSA | Core Barrel: | -- |
| Boring Location: | Sta. 298+95.9, 12.1 ft RT | Casing ID/OD: | 4" | Water Level*: | 7.8' |
| Hammer Efficiency Factor: 0.865 | | Hammer Type: | Automatic ☒ Hydraulic ☐ Rope & Cathead ☐ | | |

Definitions:
D = Split Spoon Sample; MD = Unsuccessful Split Spoon Sample Attempt; U = Thin Wall Tube Sample; MU = Unsuccessful Thin Wall Tube Sample Attempt; V = Field Vane Shear Test, PP = Pocket Penetrometer; MV = Unsuccessful Field Vane Shear Test Attempt; R = Rock Core Sample; SSA = Solid Stem Auger; HSA = Hollow Stem Auger; RC = Roller Cone; WOH = Weight of 140lb. Hammer; WOR/C = Weight of Rods or Casing; WO1P = Weight of One Person; $S_u$ = Peak/Remolded Field Vane Undrained Shear Strength (psf); $S_{u(lab)}$ = Lab Vane Undrained Shear Strength (psf); $q_p$ = Unconfined Compressive Strength (ksf); N-uncorrected = Raw Field SPT N-value; Hammer Efficiency Factor = Rig Specific Annual Calibration; $N_{60}$ = SPT N-uncorrected Corrected for Hammer Efficiency; $N_{60}$ = (Hammer Efficiency Factor/60%)*N-uncorrected; $T_v$ = Pocket Torvane Shear Strength (psf); WC = Water Content, percent; LL = Liquid Limit; PL = Plastic Limit; PI = Plasticity Index; G = Grain Size Analysis; C = Consolidation Test

| Depth (ft.) | Sample No. | Pen./Rec. (in.) | Sample Depth (ft.) | Blows (/6 in.) Shear Strength (psf) or RQD (%) | N-uncorrected | $N_{60}$ | Casing Blows | Elevation (ft.) | Visual Description and Remarks | Laboratory Testing Results/ AASHTO and Unified Class |
|---|---|---|---|---|---|---|---|---|---|---|
| 0 | | | | | | | SSA | 377.6 | ~ASPHALT~ 0.8 | |
| | 10 | 24/12 | 1.00 - 3.00 | 39-21-12-14 | 33 | 48 | | | Brown/tan, dense, fine to coarse SAND, little Gravel, trace Silt, dry. ~FILL~ (SW) | |
| 5 | 20 | 24/18 | 5.00 - 7.00 | 5-3-2-3 | 5 | 7 | 24 | | Brown, loose, fine to medium SAND, trace Silt, moist. ~FILL~ (SP) | |
| | | | | | | | 18 | | | |
| | | | | | | | 18 | | | |
| | | | | | | | 16 | | | |
| | | | | | | | 18 | | | |
| 10 | 30 | 24/22 | 10.00 - 12.00 | 3-2-2-2 | 4 | 6 | 12 | | Brown, loose, fine to medium SAND, little Silt, wet. ~FILL~ (SP) | |
| | | | | | | | 13 | | | |
| | | | | | | | 16 | | | |
| | | | | | | | 23 | | | |
| | | | | | | | 21 | | | |
| 15 | 40 | 24/18 | 15.00 - 17.00 | 2-2-2-2 | 4 | 6 | 19 | 363.4 | Dark brown/grey, loose, fine to medium SAND, some Silt, wet. -STREAM ALLUVIUM- (SM) 15.0 | |
| | | | | | | | 25 | | | |
| | | | | | | | 36 | | | |
| | | | | | | | 43 | | | |
| | | | | | | | 43 | | | |
| 20 | 50 | 24/4 | 20.00 - 22.00 | 2-2-3-4 | 5 | 7 | 26 | | Brown, loose, fine to medium SAND, little Silt, wet. -STREAM ALLUVIUM- (SM) | |
| | | | | | | | 31 | | | |
| | | | | | | | 41 | | | |
| | | | | | | | 55 | | | |
| | | | | | | | 58 | | | |
| 25 | 60 | 24/13 | 25.00 - 27.00 | 2-3-3-5 | 6 | 9 | | | Brown, loose, fine to medium SAND, little Silt, wet. -STREAM ALLUVIUM- (SM) | |
| | | | | | | | | 351.4 | 27.0 | |
| | | | | | | | | | Bottom of Exploration at 27.0 feet below ground surface. No refusal. | |
| 30 | | | | | | | | | | |
| 35 | | | | | | | | | | |
| 40 | | | | | | | | | | |
| 45 | | | | | | | | | | |
| 50 | | | | | | | | | | |

Remarks:
1. 4" casing to 25.0 ft.

Stratification lines represent approximate boundaries between soil types; transitions may be gradual.
* Water level readings have been made at times and under conditions stated. Groundwater fluctuations may occur due to conditions other than those present at the time measurements were made.

Page 1 of 1
Boring No.: BB-FSR0-203

## Maine Department of Transportation
Soil/Rock Exploration Log
US CUSTOMARY UNITS

Project: Eddy Flats Bridge (No. 2261) carries Route 302 over Saco River Location: Fryeburg, Maine

Boring No.: BB-FSR0-101A
WIN: 17912.00

| | | | | | |
|---|---|---|---|---|---|
| Driller: | MaineDOT | Elevation (ft.) | 377.4 | Auger ID/OD: | 5-inch Solid Steam |
| Operator: | Giguere/Giles | Datum: | NAVD 88 | Sampler: | N/A |
| Logged By: | Wilder | Rig Type: | CME 45C | Hammer Wt./Fall: | N/A |
| Date Start/Finish: | 3/28/11 13:00-14:30 | Drilling Method: | Cased Wash Boring | Core Barrel: | N/A |
| Boring Location: | Sta 299+25.7, 4.0 ft Lt. | Casing ID/OD: | HW (4/4.5 inches) | Water Level*: | Not Observed |
| Hammer Efficiency Factor: | | Hammer Type: | Automatic ☐ Hydraulic ☐ Rope & Cathead ☐ | | |

Definitions:
D = Split Spoon Sample; MD = Unsuccessful Split Spoon Sample Attempt; U = Thin Wall Tube Sample; MU = Unsuccessful Thin Wall Tube Sample Attempt; V = Field Vane Shear Test, PP = Pocket Penetrometer; MV = Unsuccessful Field Vane Shear Test Attempt; R = Rock Core Sample; SSA = Solid Stem Auger; HSA = Hollow Stem Auger; RC = Roller Cone; WOH = Weight of 140lb. Hammer; WOR/C = Weight of Rods or Casing; WO1P = Weight of One Person; $S_u$ = Peak/Remolded Field Vane Undrained Shear Strength (psf); $S_{u(lab)}$ = Lab Vane Undrained Shear Strength (psf); $q_p$ = Unconfined Compressive Strength (ksf); N-uncorrected = Raw Field SPT N-value; Hammer Efficiency Factor = Rig Specific Annual Calibration; $N_{60}$ = SPT N-uncorrected Corrected for Hammer Efficiency; $N_{60}$ = (Hammer Efficiency Factor/60%)*N-uncorrected; $T_v$ = Pocket Torvane Shear Strength (psf); WC = Water Content, percent; LL = Liquid Limit; PL = Plastic Limit; PI = Plasticity Index; G = Grain Size Analysis; C = Consolidation Test

| Depth (ft.) | Sample No. | Pen./Rec. (in.) | Sample Depth (ft.) | Blows (/6 in.) Shear Strength (psf) or RQD (%) | N-uncorrected | $N_{60}$ | Casing Blows | Elevation (ft.) | Visual Description and Remarks | Laboratory Testing Results/ AASHTO and Unified Class |
|---|---|---|---|---|---|---|---|---|---|---|
| 0 | | | | | | | SSA | 377.0 | 4.5-inch-thick layer of pavement. 0.4 | |
| 5 | | | | | | | | | Cobbles and Boulders from 7.2 to 10.1 feet bgs. | |
| 10 | | | | | | | | | | |
| 15 | | | | | | | 125 | 361.4 | Bottom of Exploration at 16.0 feet below ground surface. Broke casing. Left 10 feet of HW casing in borehole. moved to BB-FSR0-101B. 16.0 | |
| 20 | | | | | | | | | | |
| 25 | | | | | | | | | | |

Remarks:
~bgs = below existing ground surface (roadway)

Stratification lines represent approximate boundaries between soil types; transitions may be gradual.
* Water level readings have been made at times and under conditions stated. Groundwater fluctuations may occur due to conditions other than those present at the time measurements were made.

Page 1 of 1
Boring No.: BB-FSR0-101A

## Maine Department of Transportation
Soil/Rock Exploration Log
US CUSTOMARY UNITS

Project: Eddy Flats Bridge (No. 2261) carries Route 302 over Saco River Location: Fryeburg, Maine

Boring No.: BB-FSR0-101
WIN: 17912.00

| | | | | | |
|---|---|---|---|---|---|
| Driller: | MaineDOT | Elevation (ft.) | 377.3 | Auger ID/OD: | 5-inch Solid Stem |
| Operator: | Giguere/Giles | Datum: | NAVD 88 | Sampler: | Standard Split Spoon |
| Logged By: | Wilder | Rig Type: | CME 45C | Hammer Wt./Fall: | 140 lbs/30 inches |
| Date Start/Finish: | 3/28/11 10:30-12:00 | Drilling Method: | Cased Wash Boring | Core Barrel: | N/A |
| Boring Location: | Sta 299+27.7, 4.0 feet Lt. | Casing ID/OD: | HW (4/4.5 inch) | Water Level*: | 12.5 feet bgs |
| Hammer Efficiency Factor: 0.84 | | Hammer Type: | Automatic ☒ Hydraulic ☐ Rope & Cathead ☐ | | |

Definitions:
D = Split Spoon Sample; MD = Unsuccessful Split Spoon Sample Attempt; U = Thin Wall Tube Sample; MU = Unsuccessful Thin Wall Tube Sample Attempt; V = Field Vane Shear Test, PP = Pocket Penetrometer; MV = Unsuccessful Field Vane Shear Test Attempt; R = Rock Core Sample; SSA = Solid Stem Auger; HSA = Hollow Stem Auger; RC = Roller Cone; WOH = Weight of 140lb. Hammer; WOR/C = Weight of Rods or Casing; WO1P = Weight of One Person; $S_u$ = Peak/Remolded Field Vane Undrained Shear Strength (psf); $S_{u(lab)}$ = Lab Vane Undrained Shear Strength (psf); $q_p$ = Unconfined Compressive Strength (ksf); N-uncorrected = Raw Field SPT N-value; Hammer Efficiency Factor = Rig Specific Annual Calibration; $N_{60}$ = SPT N-uncorrected Corrected for Hammer Efficiency; $N_{60}$ = (Hammer Efficiency Factor/60%)*N-uncorrected; $T_v$ = Pocket Torvane Shear Strength (psf); WC = Water Content, percent; LL = Liquid Limit; PL = Plastic Limit; PI = Plasticity Index; G = Grain Size Analysis; C = Consolidation Test

| Depth (ft.) | Sample No. | Pen./Rec. (in.) | Sample Depth (ft.) | Blows (/6 in.) Shear Strength (psf) or RQD (%) | N-uncorrected | $N_{60}$ | Casing Blows | Elevation (ft.) | Visual Description and Remarks | Laboratory Testing Results/ AASHTO and Unified Class |
|---|---|---|---|---|---|---|---|---|---|---|
| 0 | | | | | | | SSA | 376.9 | 4.5-inch-thick layer of pavement. 0.4 | |
| | 10 | 24/16 | 1.50 - 3.50 | 9/22/16/18 | 38 | 53 | | | Dark brown-black, moist, very dense, fine Gravelly medium SAND, trace silt, old pavement. (Fill). | G#245142 A-1-b, SW WC=2.1% |
| | | | | | | | | 373.8 | 3.5 | |
| 5 | 20 | 24/18 | 5.00 - 7.00 | 9/17/17/13 | 34 | 48 | | | Brown, moist, dense, medium SAND, some fine gravel, trace silt. (Fill). | G#245143 A-1-b, SW-SM WC=4.0% |
| | | | | | | | | | Cobbles and Boulders from 7.5 to 10 feet bgs. | |
| 10 | 30 | 24/5 | 10.00 - 12.00 | 5/5/6/7 | 11 | 15 | 111 | | Similar to 20: except wet and medium dense. | |
| | | | | | | | 119 | | | |
| | | | | | | | 47 | | | |
| | | | | | | | 950 | 363.6 | 950 blows for 8.4 inches. 13.3 | |
| 15 | | | | | | | | | Bottom of Exploration at 13.7 feet below ground surface. BOULDER OR EXISTING FOOTING REFUSAL. Broke casing. Left 10 feet of HW casing in borehole. moved to BB-FSR0-101A. | |
| 20 | | | | | | | | | | |
| 25 | | | | | | | | | | |

Remarks:
~bgs = below existing ground surface (roadway)

Stratification lines represent approximate boundaries between soil types; transitions may be gradual.
* Water level readings have been made at times and under conditions stated. Groundwater fluctuations may occur due to conditions other than those present at the time measurements were made.

Page 1 of 1
Boring No.: BB-FSR0-101

STATE OF MAINE
DEPARTMENT OF TRANSPORTATION

BR-1791(200)X

PIN 17912.00

BRIDGE NO. 2261

BRIDGE PLANS

| PROJ. MANAGER | M. P-ARLIN | | | |
|---|---|---|---|---|
| DESIGN-DETAILED | B.CARDALI | | MAY 2018 | DATE |
| CHECKED-REVIEWED | C.SNOW | | MAY 2018 | SIGNATURE |
| DESIGN2-DETAILED2 | | | AUG 2018 | P.E. NUMBER |
| DESIGN3-DETAILED3 | | | | |
| REVISIONS 1 | | | | DATE |
| REVISIONS 2 | | | | |
| REVISIONS 3 | | | | |
| REVISIONS 4 | | | | |
| FIELD CHANGES | | | | |

EDDY FLATS BRIDGE
SACO RIVER OVERFLOW
FRYEBURG OXFORD COUNTY

BORING LOGS

SHEET NUMBER
B8
OF B22

Filename: ...\MSTA\009_BORING LOGS2.dgn Division: GEOTECH Username: Laura.Krusinski Date:12/7/2018

# Maine Department of Transportation
Soil/Rock Exploration Log
US CUSTOMARY UNITS

Project: Eddy Flats Bridge (No. 2261) carries Route 302 over Saco River
Location: Fryeburg, Maine

Boring No.: BB-FSR0-101B
WIN: 17912.00

| | | | | | |
|---|---|---|---|---|---|
| Driller: | MaineDOT | Elevation (ft.) | 377.5 | Auger ID/OD: | 5-inch Solid Stem |
| Operator: | Giguere/Giles | Datum: | NAVD88 | Sampler: | Standard Split Spoon |
| Logged By: | Wilder | Rig Type: | CME 45C | Hammer Wt./Fall: | 140 lbs/30 inches |
| Date Start/Finish: | 3/29;10/11-4/1,4,5,6/11 | Drilling Method: | Cased Wash Boring | Core Barrel: | NQ2 (2-inch-diameter) |
| Boring Location: | Sta 299+23.2, 3.4 feet Lt. | Casing ID/OD: | HW (4/4.5") & NW (3/3.5") | Water Level*: | 13 feet bgs |
| Hammer Efficiency Factor: 0.84 | | Hammer Type: | Automatic ☒ Hydraulic ☐ Rope & Cathead ☐ | | |

Definitions:
D = Split Spoon Sample
MD = Unsuccessful Split Spoon Sample Attempt
U = Thin Wall Tube Sample
MU = Unsuccessful Thin Wall Tube Sample Attempt
V = Field Vane Shear Test, PP = Pocket Penetrometer
MV = Unsuccessful Field Vane Shear Test Attempt
R = Rock Core Sample
SSA = Solid Stem Auger
HSA = Hollow Stem Auger
RC = Roller Cone
WOH = Weight of 140 lb. Hammer
WOR/C = Weight of Rods or Casing
WO1P = Weight of One Person
$S_u$ = Peak/Remolded Field Vane Undrained Shear Strength (psf)
$S_{u(lab)}$ = Lab Vane Undrained Shear Strength (psf)
$q_p$ = Unconfined Compressive Strength (ksf)
N-uncorrected = Raw Field SPT N-value
Hammer Efficiency Factor = Rig Specific Annual Calibration
$N_{60}$ = SPT N-uncorrected Corrected for Hammer Efficiency
$N_{60}$ = Hammer Efficiency Factor*BCR*BWR*N-uncorrected
$T_v$ = Pocket Torvane Shear Strength (psf)
WC = Water Content, percent
LL = Liquid Limit
PL = Plastic Limit
PI = Plasticity Index
G = Grain Size Analysis
C = Consolidation Test

| Depth (ft.) | Sample No. | Pen./Rec. (in) | Sample Depth (ft.) | Blows (/6 in.) Shear Strength (psf) $N_{60}$ (*) | N-uncorrected | $N_{60}$ | Casing Blows | Elevation (ft.) | Visual Description and Remarks | Laboratory Testing Results/ AASHTO and Unified Class |
|---|---|---|---|---|---|---|---|---|---|---|
| 0 | | | | | | | SSA | 377.5 | 4.5-inch-thick layer of pavement. | |
| | | | | | | | | | 0.4 Fill soils similar to BB-FSR0-101 to 15 feet bgs. *Sample NW casing ahead to 20 feet bgs. | |
| 5 | | | | | | | | | Cobbles from 5.5 to 6.5 feet bgs. | |
| | | | | | | | | | Cobbles from 7 to 8.5 feet bgs. | |
| 10 | | | | | | | | | Boulder from 10.3 to 11.5 feet bgs. | |
| 15 | 10 | 24/13 | 15.00 - 17.00 | 4/2/1/1 | 3 | 4 | | 362.5 | 15.0 Olive-brown, wet, very loose, Silty fine SAND, trace fine gravel. (Stream Alluvium). | GM245144 A-4, SM WC=51.9% |
| | | | | | | | | 358.5 | 19.0 Brown, wet, loose, SAND, trace fine gravel, trace silt. (Stream Alluvium). | |
| 20 | 20 | 24/14 | 20.00 - 22.00 | 2/2/3/4 | 5 | 7 | 25 | | | |
| | | | | | | | 22 | | | |
| | | | | | | | 33 | | | |
| | | | | | | | 31 | | | |
| 25 | | | | | | | 35 | | | |
| | MD | 24/0 | 25.00 - 27.00 | 5/6/6/7 | 12 | 17 | 24 | | Similar to 20 in wash water. | |
| | | | | | | | 32 | | | |
| | | | | | | | 37 | | | |
| | | | | | | | 38 | | | |
| 30 | | | | | | | 27 | | | |
| | 30 | 24/16 | 30.00 - 32.00 | 2/3/5/5 | 8 | 11 | 8 | | Brown, wet, medium dense, medium SAND, trace fine gravel, trace silt. (Stream Alluvium). | GM245147 A-1-b, SW-SM WC=32.4% |
| | | | | | | | 15 | | | |
| | | | | | | | 27 | | | |
| | | | | | | | 34 | | | |
| 35 | | | | | | | 46 | | | |
| | 40 | 24/14 | 35.00 - 37.00 | 2/3/4/5 | 7 | 10 | 12 | | Grey, wet, loose, fine SAND, trace silt. | GM245145 A-3, SP-SM WC=23.1% |
| | | | | | | | 13 | | | |
| | | | | | | | 37 | | | |
| | | | | | | | 47 | | | |
| 40 | | | | | | | 49 | | | |
| | 50 | 24/16 | 40.00 - 42.00 | 1/3/3/4 | 6 | 8 | 19 | | Grey, wet, loose, medium SAND, trace silt. | GM245146 A-1-b, SP WC=21.6% |
| | | | | | | | 39 | | | |
| | | | | | | | 61 | | | |
| | | | | | | | 73 | | | |
| | | | | | | | 92 | | | |
| 45 | 60 | 24/20 | 45.00 - 47.00 | 1/2/2/2 | 4 | 6 | 41 | 332.5 | 45.0 Grey, wet, loose, Silty fine SAND. | GM245148 A-4, SM WC=33.9% |
| | | | | | | | 35 | | | |
| | | | | | | | 41 | | | |
| | | | | | | | 47 | | | |
| | | | | | | | 53 | | | |
| 50 | 70 | 24/23 | 50.00 - 52.00 | 4/1/1/2 | 2 | 3 | 59 | 327.0 | 50.5 Grey, wet, soft, SILT, little fine sand, trace clay, trace organics. (Glaciolacustrine). | GM245149 A-4, ML WC=36.9% |
| | | | | | | | 57 | | | |
| | | | | | | | 53 | | | |
| | | | | | | | 53 | | | |
| | | | | | | | 57 | | | |
| 55 | 80 | 24/24 | 55.00 - 57.00 | WOR/WOR/WOR/WOR | --- | | 55 | | Grey, wet, very soft, SILT, some clay, trace fine sand. (Glaciolacustrine). | GM245150 A-4, CL-ML WC=43.1% |
| | | | | | | | 69 | | | |
| | | | | | | | 69 | | | |
| | | | | | | | 68 | | | |
| | | | | | | | 82 | | | |
| 60 | WV/90 | 24/24 | 60.00 - 62.00 | WOH/2/2/5 | 4 | 6 | 91 | | Failed 55x110 mm vane attempt, would not push. Grey, wet, medium stiff, SILT, some clay, trace fine sand. (Glaciolacustrine). | GM245151 A-4, CL WC=35.7% |
| | | | | | | | 107 | | | |
| | | | | | | | 116 | | | |
| | | | | | | | 120 | | | |
| | | | | | | | 136 | 313.0 | 64.5 Cobble from 65 to 65.5 feet bgs. | |
| 65 | 100 | 24/12 | 65.50 - 67.50 | 5/3/18/19 | 25 | 35 | 118 | | Grey, wet, dense, fine Sandy coarse GRAVEL, trace silt. (Glacial Till). | GM245152 A-1-a, GW-GM WC=9.1% |
| | | | | | | | 108 | | | |
| | | | | | | | 152 | | | |
| | | | | | | | 127 | | | |
| | | | | | | | 97 | | | |
| 70 | 110 | 24/12 | 70.00 - 72.00 | 7/19/10/11 | 29 | 41 | 119 | 307.5 | 70.0 Grey, wet, dense, medium SAND, some fine gravel, little silt. (Glacial Till), RC from 71 to 110.9 feet bgs. | GM245153 A-1-b, SW-SM WC=10.6% |
| | | | | | | | 250 | | | |
| | | | | | | | 200 | | | |
| | | | | | | | 158 | | | |
| | | | | | | | 162 | | | |
| 75 | | | | | | | | | | |

Remarks:
-bgs = below existing ground surface (roadway)

Stratification lines represent approximate boundaries between soil types; transitions may be gradual.
* Water level readings have been made at times and under conditions stated. Groundwater fluctuations may occur due to conditions other than those present at the time measurements were made.

Page 1 of 2
Boring No.: BB-FSR0-101B

# Maine Department of Transportation
Soil/Rock Exploration Log
US CUSTOMARY UNITS

Project: Eddy Flats Bridge (No. 2261) carries Route 302 over Saco River
Location: Fryeburg, Maine

Boring No.: BB-FSR0-101B
WIN: 17912.00

| | | | | | |
|---|---|---|---|---|---|
| Driller: | MaineDOT | Elevation (ft.) | 377.5 | Auger ID/OD: | 5-inch Solid Stem |
| Operator: | Giguere/Giles | Datum: | NAVD88 | Sampler: | Standard Split Spoon |
| Logged By: | Wilder | Rig Type: | CME 45C | Hammer Wt./Fall: | 140 lbs/30 inches |
| Date Start/Finish: | 3/29;10/11-4/1,4,5,6/11 | Drilling Method: | Cased Wash Boring | Core Barrel: | NQ2 (2-inch-diameter) |
| Boring Location: | Sta 299+23.2, 3.4 feet Lt. | Casing ID/OD: | HW (4/4.5") & NW (3/3.5") | Water Level*: | 13 feet bgs |
| Hammer Efficiency Factor: 0.84 | | Hammer Type: | Automatic ☒ Hydraulic ☐ Rope & Cathead ☐ | | |

Definitions:
D = Split Spoon Sample
MD = Unsuccessful Split Spoon Sample Attempt
U = Thin Wall Tube Sample
MU = Unsuccessful Thin Wall Tube Sample Attempt
V = Field Vane Shear Test, PP = Pocket Penetrometer
MV = Unsuccessful Field Vane Shear Test Attempt
R = Rock Core Sample
SSA = Solid Stem Auger
HSA = Hollow Stem Auger
RC = Roller Cone
WOH = Weight of 140 lb. Hammer
WOR/C = Weight of Rods or Casing
WO1P = Weight of One Person
$S_u$ = Peak/Remolded Field Vane Undrained Shear Strength (psf)
$S_{u(lab)}$ = Lab Vane Undrained Shear Strength (psf)
$q_p$ = Unconfined Compressive Strength (ksf)
N-uncorrected = Raw Field SPT N-value
Hammer Efficiency Factor = Rig Specific Annual Calibration
$N_{60}$ = SPT N-uncorrected Corrected for Hammer Efficiency
$N_{60}$ = Hammer Efficiency Factor*BCR*BWR*N-uncorrected
$T_v$ = Pocket Torvane Shear Strength (psf)
WC = Water Content, percent
LL = Liquid Limit
PL = Plastic Limit
PI = Plasticity Index
G = Grain Size Analysis
C = Consolidation Test

| Depth (ft.) | Sample No. | Pen./Rec. (in) | Sample Depth (ft.) | Blows (/6 in.) Shear Strength (psf) $N_{60}$ (*) | N-uncorrected | $N_{60}$ | Casing Blows | Elevation (ft.) | Visual Description and Remarks | Laboratory Testing Results/ AASHTO and Unified Class |
|---|---|---|---|---|---|---|---|---|---|---|
| 75 | | | | | | | 150 | | Cobbles and Boulders from 75 to 77.8 feet bgs. | |
| | | | | | | | 185 | | | |
| | | | | | | | 220 | | | |
| | | | | | | | 266 | | | |
| | | | | | | | 258 | | | |
| 80 | 120 | 18/16 | 80.00 - 81.50 | 32/50/35 | 85 | 119 | 183 | 297.5 | 80.0 Grey, wet, hard, fine Sandy SILT, trace fine gravel, trace clay. (Glacial Till). | GM245154 A-4, SC-SM WC=13.1% |
| | | | | | | | 170 | | | |
| | | | | | | | 132 | | | |
| | | | | | | | 127 | 294.5 | 83.0 | |
| | | | | | | | 275 | | | |
| 85 | 130 | 8.4/8.4 | 85.00 - 85.70 | 10/50(2.4") | --- | | 178 | | Grey, wet, very dense, medium SAND, little fine gravel, little silt. (Glacial Till). | GM245155 A-1-b, SM WC=12.8% |
| | | | | | | | 186 | | | |
| | | | | | | | 486 | | | |
| | | | | | | | 494 | | | |
| | | | | | | | 297 | | | |
| 90 | 140 | 6/6 | 90.00 - 90.50 | 50 | --- | | 213 | | Grey, wet, very dense, fine SAND, little fine gravel, trace silt. (Glacial Till). | GM245156 A-1-b, SW-SM WC=13.2% |
| | | | | | | | 62 | | | |
| | | | | | | | 96 | | | |
| | | | | | | | 77 | | | |
| | | | | | | | 93 | | | |
| 95 | 150 | 9.6/9 | 95.00 - 95.80 | 14/50(3.6") | --- | | 87 | | Similar to 140. | |
| | | | | | | | 87 | | | |
| | | | | | | | 110 | | | |
| | | | | | | | 313 | | | |
| | | | | | | | 238 | | | |
| 100 | 160 | 10.8/10.8 | 100.00 - 100.90 | 50/50(4.8") | --- | | 195 | | Grey, wet, very dense, fine SAND, little silt, trace fine gravel. (Glacial Till). | GM245157 A-2-4, SM WC=12.3% |
| | | | | | | | 235 | | | |
| | | | | | | | 242 | 274.5 | 103.0 | |
| | | | | | | | 275 | | | |
| | | | | | | | 370 | | | |
| 105 | 170 | 14.4/12 | 105.00 - 106.20 | 10/60/40(2.4") | --- | | 300 | | Grey, wet, very hard, SILT, some clay, some fine sand, trace fine gravel. (Glacial Till). | GM245158 A-4, CL WC=20.1% |
| | | | | | | | 167 | | | |
| | | | | | | | 222 | | | |
| | | | | | | | 294 | | | |
| | | | | | | | 402 | | | |
| 110 | 180 RT | 9.6/9.6 60/55 | 110.00 - 110.80 +110.90 - 115.90 | 29/50(3.6") RQD = 88% | --- | | ND-2 | 266.6 | Grey, wet, hard, SILT, little clay, trace fine sand. 110.9 | GM245159 A-4, CL-ML WC=23.6% |
| | | | | | | | | | Top of Bedrock at Elev. 266.6 ft.<br>R1:Bedrock: No bedrock description recorded.<br>R1:Core Times (min:sec)<br>110.9-111.9 ft (2:55)<br>111.9-112.9 ft (2:45)<br>112.9-113.9 ft (2:45)<br>113.9-114.9 ft (2:50)<br>114.9-115.9 ft (3:00) 98% Recovery | |
| 115 | R2 | 60/60 | 115.90 - 120.90 | RQD = 95% | | | | 261.6 | R2:Bedrock: No bedrock description recorded. 115.9<br>R2:Core Times (min:sec)<br>115.9-116.9 ft (2:38)<br>116.9-117.9 ft (3:20)<br>117.9-118.9 ft (4:20)<br>118.9-119.9 ft (3:25)<br>119.9-120.9 ft (3:25) 100% Recovery | |
| 120 | | | | | | | | 256.6 | 120.9 Bottom of Exploration at 120.9 feet below ground surface. | |
| 125 | | | | | | | | | | |

Remarks:
-bgs = below existing ground surface (roadway)

Stratification lines represent approximate boundaries between soil types; transitions may be gradual.
* Water level readings have been made at times and under conditions stated. Groundwater fluctuations may occur due to conditions other than those present at the time measurements were made.

Page 2 of 2
Boring No.: BB-FSR0-101B

# Maine Department of Transportation
Soil/Rock Exploration Log
US CUSTOMARY UNITS

Project: Eddy Flats Bridge (No. 2261) carries Route 302 over Saco River
Location: Fryeburg, Maine

Boring No.: BB-FSR0-102
WIN: 17912.00

| | | | | | |
|---|---|---|---|---|---|
| Driller: | MaineDOT | Elevation (ft.) | 378.0 | Auger ID/OD: | 5-inch Solid Stem |
| Operator: | Giguere/Giles | Datum: | NAVD88 | Sampler: | Standard Split Spoon |
| Logged By: | Wilder | Rig Type: | CME 45C | Hammer Wt./Fall: | 140 lbs/30 inches |
| Date Start/Finish: | 4/7,8,11,12/11 | Drilling Method: | Cased Wash Boring | Core Barrel: | NQ2 (2-inch-diameter) |
| Boring Location: | Sta 299+62.5, 12.7 ft Rt. | Casing ID/OD: | HW (4/4.5") & NW (3/3.5") | Water Level*: | 12 feet bgs. |
| Hammer Efficiency Factor: 0.84 | | Hammer Type: | Automatic ☒ Hydraulic ☐ Rope & Cathead ☐ | | |

Definitions:
D = Split Spoon Sample
MD = Unsuccessful Split Spoon Sample Attempt
U = Thin Wall Tube Sample
MU = Unsuccessful Thin Wall Tube Sample Attempt
V = Field Vane Shear Test, PP = Pocket Penetrometer
MV = Unsuccessful Field Vane Shear Test Attempt
R = Rock Core Sample
SSA = Solid Stem Auger
HSA = Hollow Stem Auger
RC = Roller Cone
WOH = Weight of 140 lb. Hammer
WOR/C = Weight of Rods or Casing
WO1P = Weight of One Person
$S_u$ = Peak/Remolded Field Vane Undrained Shear Strength (psf)
$S_{u(lab)}$ = Lab Vane Undrained Shear Strength (psf)
$q_p$ = Unconfined Compressive Strength (ksf)
N-uncorrected = Raw Field SPT N-value
Hammer Efficiency Factor = Rig Specific Annual Calibration
$N_{60}$ = SPT N-uncorrected Corrected for Hammer Efficiency
$N_{60}$ = Hammer Efficiency Factor*BCR*BWR*N-uncorrected
$T_v$ = Pocket Torvane Shear Strength (psf)
WC = Water Content, percent
LL = Liquid Limit
PL = Plastic Limit
PI = Plasticity Index
G = Grain Size Analysis
C = Consolidation Test

| Depth (ft.) | Sample No. | Pen./Rec. (in) | Sample Depth (ft.) | Blows (/6 in.) Shear Strength (psf) $N_{60}$ (*) | N-uncorrected | $N_{60}$ | Casing Blows | Elevation (ft.) | Visual Description and Remarks | Laboratory Testing Results/ AASHTO and Unified Class |
|---|---|---|---|---|---|---|---|---|---|---|
| 0 | | | | | | | SSA | 377.5 | T-inch-thick layer of pavement. | |
| | | | | | | | | | 0.6 Cobble from 1.5 to 2.2 feet bgs. | |
| 5 | | | | | | | | | | |
| | | | | | | | | | | |
| | | | | | | | | | | |
| | | | | | | | | | | |
| | | | | | | | | | | |
| 10 | 10 | 24/12 | 5.00 - 7.00 | 2/3/5/3 | 8 | 11 | | | Brown, moist, medium dense, medium SAND, little fine gravel, trace silt, occasional cobbles. (Fill). | GM245160 A-1-b, SP-SM WC=4.1% |
| | | | | | | | | | | |
| | | | | | | | | | | |
| 15 | | | | | | | | | | |
| | | | | | | | | | | |
| 20 | 20 | 24/14 | 10.00 - 12.00 | 2/2/3/6 | 5 | 7 | 9SP | | Brown, moist, loose, medium SAND, little fine gravel, little silt. (Fill). | GM245161 A-1-b, SP-SM WC=14.0% |
| | | | | | | | | | | |
| | | | | | | | | | | |
| | | | | | | | | | | |
| | | | | | | | | | | |
| 25 | | | | | | | | | | |
| | MD | 24/1 | 15.00 - 17.00 | 5/5/7/8 | 12 | 17 | | | Similar to 20. | |
| | | | | | | | | | | |
| | | | | | | | | | | |
| | | | | | | | | | | |
| | | | | | | | | | | |
| 30 | | | | | | | | 359.5 | 18.5 | |
| | 30 | 24/18 | 20.00 - 22.00 | 2/3/2/3 | 5 | 7 | 10 | | Brown, wet, loose, medium SAND, trace coarse gravel, trace silt. (Stream Alluvium). | GM245162 A-1-b, SP WC=22.1% |
| | | | | | | | 10 | | | |
| | | | | | | | 12 | | | |
| | | | | | | | 12 | | | |
| | | | | | | | 13 | | | |
| 35 | | | | | | | 28 | | | |
| | 40 | 24/14 | 30.00 - 32.00 | 2/3/3/3 | 6 | 8 | 16 | | Grey, wet, loose, fine SAND, trace silt. (Stream Alluvium). | GM245163 A-3, SP-SM WC=28.0% |
| | | | | | | | 19 | | | |
| | | | | | | | 30 | | | |
| | | | | | | | 41 | | | |
| | | | | | | | 64 | | | |
| 40 | | | | | | | 79 | | | |
| | 50 | 24/20 | 40.00 - 42.00 | 1/1/2/3 | 3 | 4 | 73 | | Grey, wet, very loose, medium SAND, trace silt. (Stream Alluvium). | GM245164 A-1-b, SP WC=21.3% |
| | | | | | | | 76 | | | |
| | | | | | | | 77 | | | |
| | | | | | | | 108 | | | |
| | | | | | | | 127 | | | |
| 45 | | | | | | | 165 | | | |
| | | | | | | | 167 | | | |
| | | | | | | | 169 | | | |
| | | | | | | | 175 | | | |
| 50 | 60 | 24/18 | 50.00 - 52.00 | 8/2/1/4 | 3 | 4 | 107 | | Grey, wet, very loose, Silty fine SAND. | GM245165 A-4, SM WC=32.6% |
| | | | | | | | 82 | | | |
| | | | | | | | 81 | | | |
| | | | | | | | 113 | | | |
| | | | | | | | 122 | | | |
| 55 | | | | | | | 122 | | | |
| | | | | | | | 127 | | | |
| | | | | | | | 138 | | | |
| | | | | | | | 176 | | | |
| | | | | | | | 192 | 318.0 | 60.0 | |
| 60 | 70 | 24/24 | 60.00 - 62.00 | 1/WOR/1/WOR | 1 | 1 | 159 | | Grey, wet, very soft, SILT, trace clay, trace fine sand. (Glaciolacustrine). | GM245166 A-4, ML WC=47.6% |
| | | | | | | | 165 | | | |
| | | | | | | | 135 | | | |
| | | | | | | | 175 | | | |
| 65 | | | | | | | 181 | | | |
| | | | | | | | 181 | | | |
| | | | | | | | 186 | | | |
| | | | | | | | 186 | | | |
| | | | | | | | 178 | | | |
| | | | | | | | 178 | | | |
| 70 | 80/WV | 24/24 | 70.00 - 72.00 | WOR/WOR/WOR/WOR | --- | | 129 | | Grey, wet, very soft, SILT, some fine sand, trace clay. Failed 55x110 mm vane attempt, would not push. | GM245167 A-4, ML WC=43.3% |
| | | | | | | | 130 | | | |
| | | | | | | | 165 | | | |
| | | | | | | | 165 | | | |
| | | | | | | | 178 | | | |
| 75 | | | | | | | | | | |

Remarks:
-bgs = below existing ground surface (roadway)

Stratification lines represent approximate boundaries between soil types; transitions may be gradual.
* Water level readings have been made at times and under conditions stated. Groundwater fluctuations may occur due to conditions other than those present at the time measurements were made.

Page 1 of 2
Boring No.: BB-FSR0-102

# Maine Department of Transportation
Soil/Rock Exploration Log
US CUSTOMARY UNITS

Project: Eddy Flats Bridge (No. 2261) carries Route 302 over Saco River
Location: Fryeburg, Maine

Boring No.: BB-FSR0-102
WIN: 17912.00

| | | | | | |
|---|---|---|---|---|---|
| Driller: | MaineDOT | Elevation (ft.) | 378.0 | Auger ID/OD: | 5-inch Solid Stem |
| Operator: | Giguere/Giles | Datum: | NAVD88 | Sampler: | Standard Split Spoon |
| Logged By: | Wilder | Rig Type: | CME 45C | Hammer Wt./Fall: | 140 lbs/30 inches |
| Date Start/Finish: | 4/7,8,11,12/11 | Drilling Method: | Cased Wash Boring | Core Barrel: | NQ2 (2-inch-diameter) |
| Boring Location: | Sta 299+62.5, 12.7 ft Rt. | Casing ID/OD: | HW (4/4.5") & NW (3/3.5") | Water Level*: | 12 feet bgs. |
| Hammer Efficiency Factor: 0.84 | | Hammer Type: | Automatic ☒ Hydraulic ☐ Rope & Cathead ☐ | | |

Definitions:
D = Split Spoon Sample
MD = Unsuccessful Split Spoon Sample Attempt
U = Thin Wall Tube Sample
MU = Unsuccessful Thin Wall Tube Sample Attempt
V = Field Vane Shear Test, PP = Pocket Penetrometer
MV = Unsuccessful Field Vane Shear Test Attempt
R = Rock Core Sample
SSA = Solid Stem Auger
HSA = Hollow Stem Auger
RC = Roller Cone
WOH = Weight of 140 lb. Hammer
WOR/C = Weight of Rods or Casing
WO1P = Weight of One Person
$S_u$ = Peak/Remolded Field Vane Undrained Shear Strength (psf)
$S_{u(lab)}$ = Lab Vane Undrained Shear Strength (psf)
$q_p$ = Unconfined Compressive Strength (ksf)
N-uncorrected = Raw Field SPT N-value
Hammer Efficiency Factor = Rig Specific Annual Calibration
$N_{60}$ = SPT N-uncorrected Corrected for Hammer Efficiency
$N_{60}$ = Hammer Efficiency Factor*BCR*BWR*N-uncorrected
$T_v$ = Pocket Torvane Shear Strength (psf)
WC = Water Content, percent
LL = Liquid Limit
PL = Plastic Limit
PI = Plasticity Index
G = Grain Size Analysis
C = Consolidation Test

| Depth (ft.) | Sample No. | Pen./Rec. (in) | Sample Depth (ft.) | Blows (/6 in.) Shear Strength (psf) $N_{60}$ (*) | N-uncorrected | $N_{60}$ | Casing Blows | Elevation (ft.) | Visual Description and Remarks | Laboratory Testing Results/ AASHTO and Unified Class |
|---|---|---|---|---|---|---|---|---|---|---|
| 75 | | | | | | | 162 | | | |
| | | | | | | | 224 | | | |
| | | | | | | | 224 | | | |
| | | | | | | | 224 | | | |
| | | | | | | | 224 | | | |
| 80 | 90 | 24/20 | 80.50 - 82.50 | 10/5/7/8 | 12 | 17 | 176 | | Grey, wet, very stiff, SILT, little clay. (Glaciolacustrine). | GM245168 A-4, CL-ML WC=34.1% |
| | | | | | | | 166 | | | |
| | | | | | | | 167 | | | |
| | | | | | | | 167 | | | |
| | | | | | | | 169 | | | |
| 85 | | | | | | | 170 | | | |
| | | | | | | | 167 | | | |
| | | | | | | | 164 | | | |
| | | | | | | | 164 | | | |
| | | | | | | | 164 | 289.0 | 89.0 | |
| 90 | 100 | 24/14 | 90.00 - 92.00 | 4/7/10/15 | 17 | 24 | 166 | | Grey, wet, medium dense, fine SAND, some silt, trace fine gravel. (Glacial Till). | GM245169 A-2-4, SM WC=18.1% |
| | | | | | | | 98 | | | |
| | | | | | | | 105 | | | |
| | | | | | | | 97 | | | |
| | | | | | | | 112 | | | |
| 95 | | | | | | | 96 | | RC to 100 feet bgs. | |
| | | | | | | | 162 | | | |
| | | | | | | | 238 | | | |
| | | | | | | | 386 | 280.0 | 98.0 | |
| | | | | | | | 508 | | | |
| 100 | 110 | 18/18 | 100.00 - 101.50 | 21/26/19 | 45 | 63 | 290 | | Grey, wet, hard, Silty CLAY, little coarse sand, trace fine gravel. | GM245170 A-4, CL WC=17.4% |
| | | | | | | | 294 | | | |
| | | | | | | | 232 | | | |
| | | | | | | | 186 | | | |
| | | | | | | | 178 | | | |
| 105 | | | | | | | 173 | | | |
| | | | | | | | 189 | | | |
| | | | | | | | 162 | | | |
| | | | | | | | 216 | | | |
| | | | | | | | 216 | 268.0 | 110.0 | |
| 110 | 120 | 24/18 | 110.00 - 112.00 | WOH/WOH/3/10 | 3 | 4 | 150 | | Grey, wet, soft, SILT, some clay, little fine sand. | GM245171 A-4, CL-ML WC=25.4% |
| | | | | | | | 187 | | | |
| | | | | | | | 178 | | | |
| | | | | | | | 220 | | | |
| 115 | R1 | 60/60 | 114.40 - 119.40 | RQD = 85% | | | D150 ND-2 | 263.6 | D150 blows for 0.4 ft. 114.4<br>Top of Bedrock at Elev. 263.6 ft.<br>R1:Bedrock: No bedrock description recorded.<br>R1:Core Times (min:sec)<br>114.4-115.4 ft (5:25)<br>115.4-116.4 ft (3:40)<br>116.4-117.4 ft (3:50)<br>117.4-118.4 ft (2:05)<br>118.4-119.4 ft (3:00) 100% Recovery | |
| 120 | R2 | 60/60 | 119.40 - 124.40 | RQD = 90% | | | | 258.6 | R2:Bedrock: No bedrock description recorded. 119.4<br>R2:Core Times (min:sec)<br>119.4-120.4 ft (4:00)<br>120.4-121.4 ft (3:15)<br>121.4-122.4 ft (3:10)<br>122.4-123.4 ft (3:00)<br>123.4-124.4 ft (4:00) 100% Recovery | |
| 125 | | | | | | | | 253.6 | 124.4 Bottom of Exploration at 124.4 feet below ground surface. | |

Remarks:
-bgs = below existing ground surface (roadway)

Stratification lines represent approximate boundaries between soil types; transitions may be gradual.
* Water level readings have been made at times and under conditions stated. Groundwater fluctuations may occur due to conditions other than those present at the time measurements were made.

Page 2 of 2
Boring No.: BB-FSR0-102

STATE OF MAINE
DEPARTMENT OF TRANSPORTATION

BR-1791(200)X

PIN 17912.00

BRIDGE NO. 2261

BRIDGE PLANS

| PROJ. MANAGER | M. P-ARLIN | | |
|---|---|---|---|
| | BY | DATE | SIGNATURE |
| DESIGN-DETAILED | B.CARDALI | MAY 2018 | |
| CHECKED-REVIEWED | C.SNOW | MAY 2018 | |
| DESIGN2-DETAILED2 | A.BLASDELL | AUG 2018 | P.E. NUMBER |
| DESIGN3-DETAILED3 | T.WHITE | | |
| REVISIONS 1 | | | DATE |
| REVISIONS 2 | | | |
| REVISIONS 3 | | | |
| REVISIONS 4 | | | |
| FIELD CHANGES | | | |

EDDY FLATS BRIDGE
SACO RIVER OVERFLOW
FRYEBURG OXFORD COUNTY

BORING LOGS

SHEET NUMBER
B9
OF B22

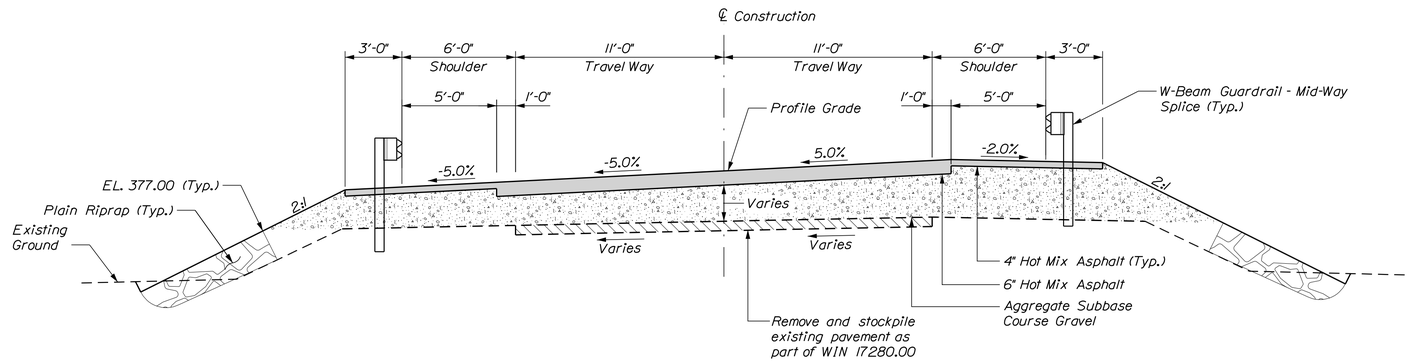


TYPICAL APPROACH SECTION

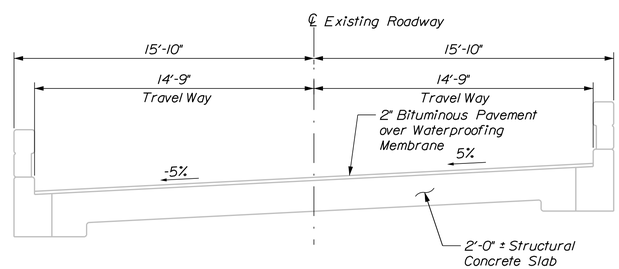


EXISTING TRANSVERSE SECTION

STATE OF MAINE
DEPARTMENT OF TRANSPORTATION

STP-1791(200)

WIN 17912.00

BRIDGE NO. 2261

BRIDGE PLANS

| | | | |
|---|---|---|---|
| PROJ. MANAGER | J. STILWELL | BY | DATE |
| DESIGN-DETAILED | RMN | DJB/LSF | DEC 2018 |
| CHECKED-REVIEWED | JGS | SJW | DEC 2018 |
| DESIGN2-DETAILED2 | | | |
| DESIGN3-DETAILED3 | | | |
| REVISIONS 1 | | | |
| REVISIONS 2 | | | |
| REVISIONS 3 | | | |
| REVISIONS 4 | | | |
| FIELD CHANGES | | | |

SIGNATURE

P.E. NUMBER

DATE

EDDY FLATS BRIDGE
SACO RIVER OVERFLOW
FRYEBURG OXFORD COUNTY

TYPICAL SECTIONS

SHEET NUMBER

B10

OF B22

Filename: ...\MSTA\B10_BTypical_01.dgn Division: BRIDGE Username: lflanders Date:12/14/2018

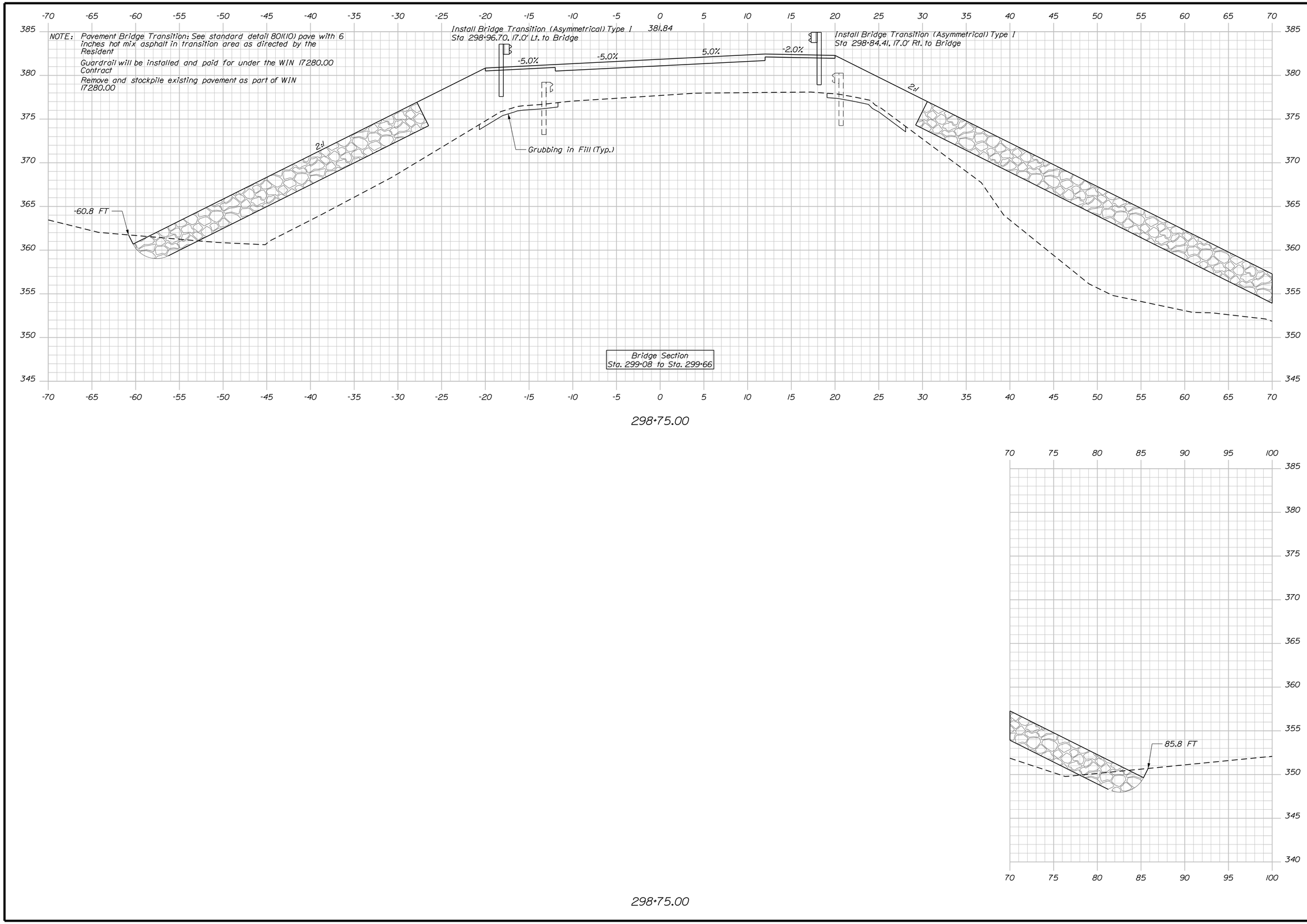


STATE OF MAINE
DEPARTMENT OF TRANSPORTATION

STP-1791(200)

WIN 17912.00

BRIDGE NO. 2261

BRIDGE PLANS

SIGNATURE

P.E. NUMBER

DATE

| PROJ. MANAGER | J. STILWELL | BY | DATE |
|---|---|---|---|
| DESIGN-DETAILED | MJD | KLW | DEC 2018 |
| CHECKED-REVIEWED | SJB | RMN | DEC 2018 |
| DESIGN2-DETAILED2 | | | |
| DESIGN3-DETAILED3 | | | |
| REVISIONS 1 | | | |
| REVISIONS 2 | | | |
| REVISIONS 3 | | | |
| REVISIONS 4 | | | |
| FIELD CHANGES | | | |

EDDY FLATS BRIDGE
SACO RIVER OVERFLOW
FRYEBURG OXFORD COUNTY

CROSS SECTIONS

SHEET NUMBER

B11

OF B22

Filename: ...\BRIDGE\MSTA\B11-B12_xsect.dgn Division: BRIDGE Username: lflanders Date:12/14/2018

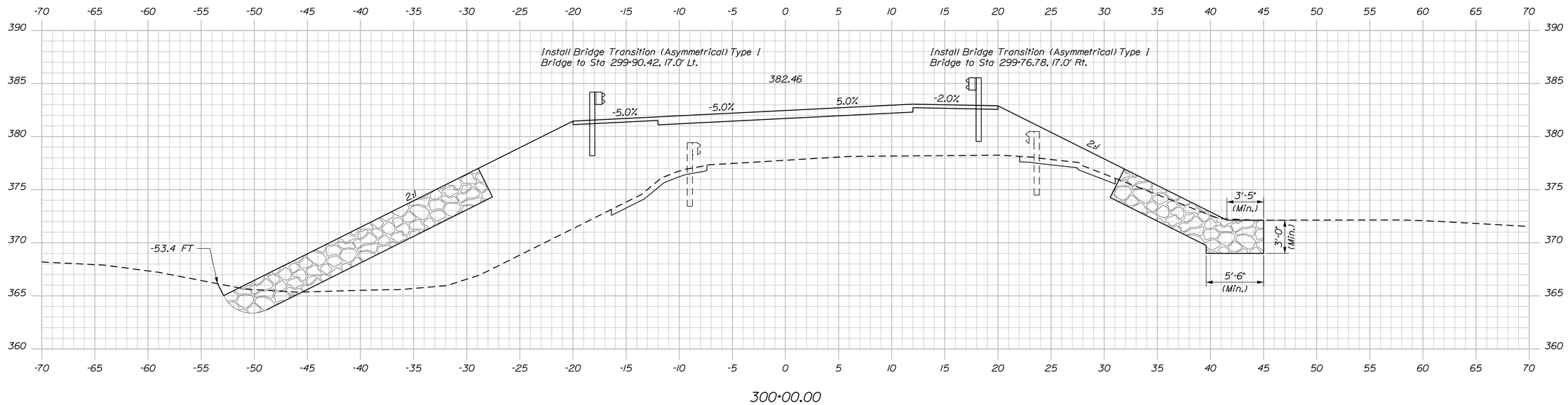


STATE OF MAINE
DEPARTMENT OF TRANSPORTATION

STP-1791(200)

WIN 17912.00

BRIDGE NO. 2261

BRIDGE PLANS

| | | | |
|---|---|---|---|
| PROJ. MANAGER | J. STILWELL | | |
| DESIGN-DETAILED | MJD | KLW | DEC 2018 |
| CHECKED-REVIEWED | SJB | RWN | DEC 2018 |
| DESIGN2-DETAILED2 | | | |
| DESIGN3-DETAILED3 | | | |
| REVISIONS 1 | | | |
| REVISIONS 2 | | | |
| REVISIONS 3 | | | |
| REVISIONS 4 | | | |
| FIELD CHANGES | | | |

SIGNATURE

P.E. NUMBER

DATE

EDDY FLATS BRIDGE
SACO RIVER OVERFLOW
FRYEBURG OXFORD COUNTY

CROSS SECTIONS

SHEET NUMBER

B12

OF B22

Filename: ...\BRIDGE\MSTA\B11-B12_xsect.dgn Division: BRIDGE Username: lflanders Date:12/14/2018

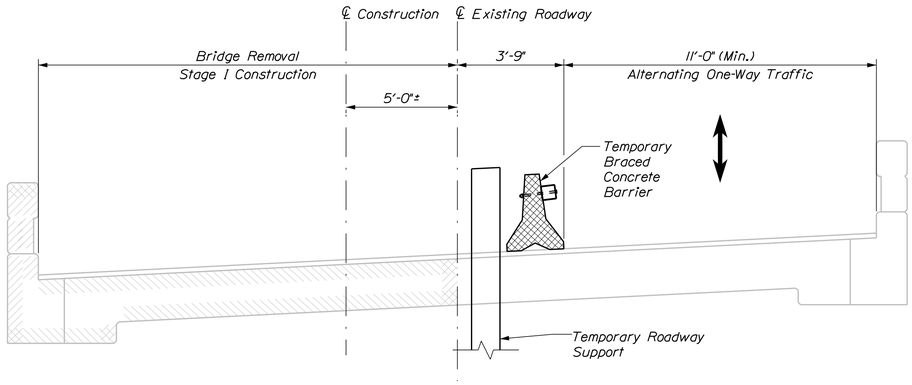


## STAGE I

1. Install temporary signal and traffic control.
2. Shift traffic to south side of bridge.
3. Install temporary roadway support.
4. Demolish north side of bridge.

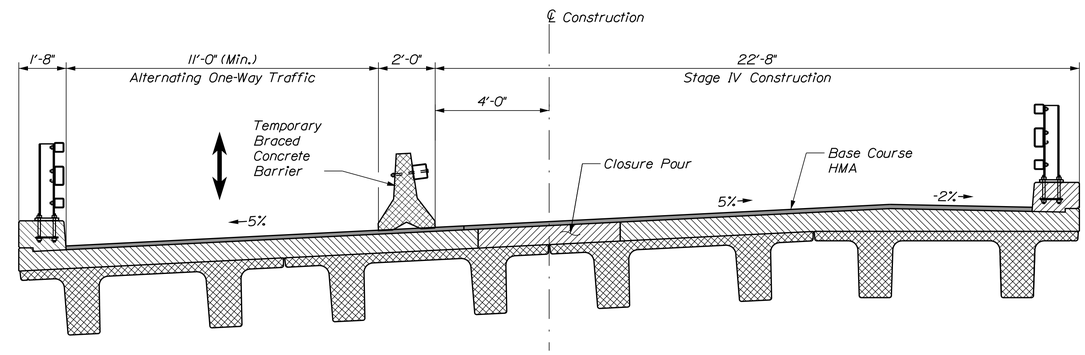


## STAGE IV

1. Construct south side of bridge.
2. Construct closure pour.
3. Construct base course of pavement.

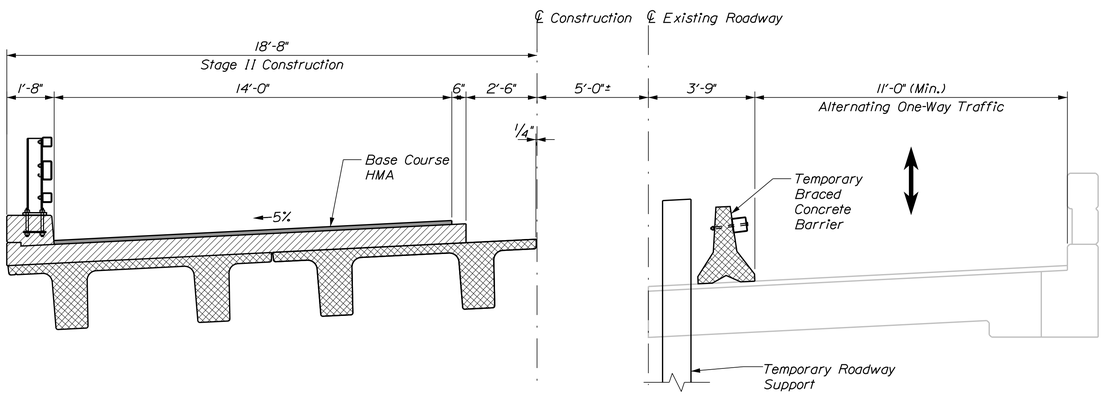


## STAGE II

1. Construct north side of bridge and base course of pavement.
2. Install approach roadway north of Stage I temporary roadway support.

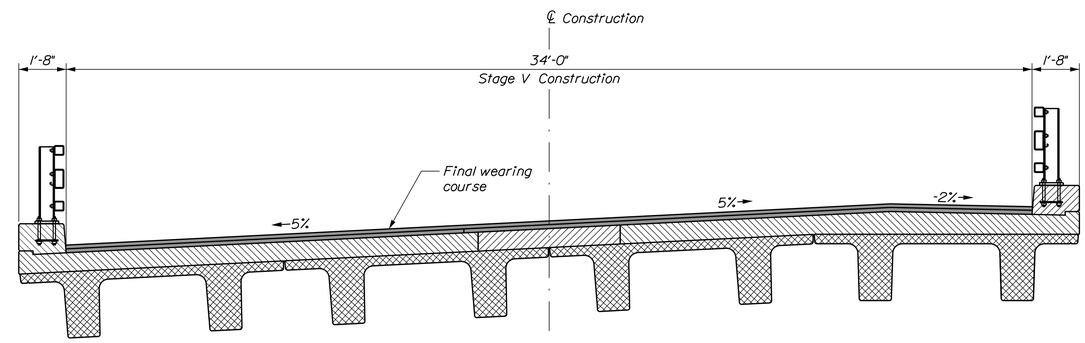


## STAGE V

1. Maintain one 11'-0" minimum lane of alternating one-way traffic to install final wearing course of pavement.

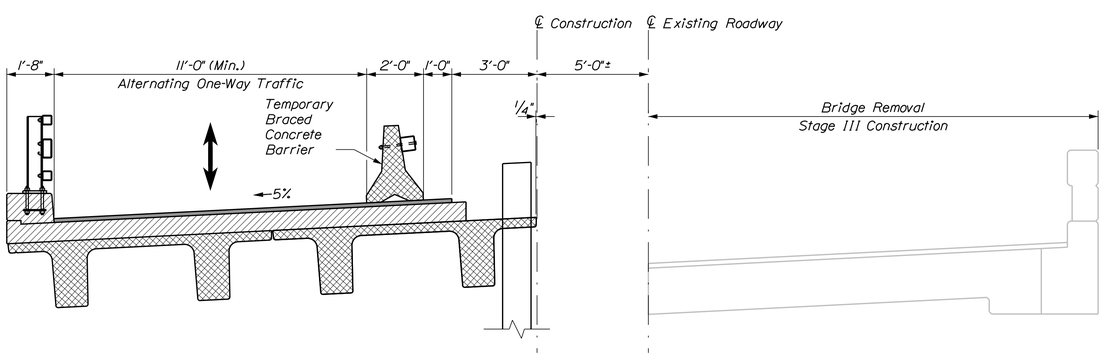


## STAGE III

1. Shift traffic to north side of bridge.
2. Demolish south side of bridge and remove temporary roadway support installed during Stage I.
3. Install temporary roadway support.

STATE OF MAINE
DEPARTMENT OF TRANSPORTATION

STP-1791(200)

WIN 17912.00

BRIDGE NO. 2261

BRIDGE PLANS

| | | | |
|---|---|---|---|
| PROJ. MANAGER | J. STILWELL | BY | DATE |
| DESIGN-DETAILED | RMN | DJB\LSF | DEC 2018 |
| CHECKED-REVIEWED | JCS | SJW | DEC 2018 |
| DESIGN2-DETAILED2 | | | |
| DESIGN3-DETAILED3 | | | |
| REVISIONS 1 | | | |
| REVISIONS 2 | | | |
| REVISIONS 3 | | | |
| REVISIONS 4 | | | |
| FIELD CHANGES | | | |

SIGNATURE

P.E. NUMBER

DATE

EDDY FLATS BRIDGE
SACO RIVER OVERFLOW
FRYEBURG OXFORD COUNTY

# STAGED CONSTRUCTION

SHEET NUMBER

B13

OF B22

Filename: ...\MSTA\B13_Staged_Constr.dgn Division: BRIDGE Username: lflanders Date:12/14/2018

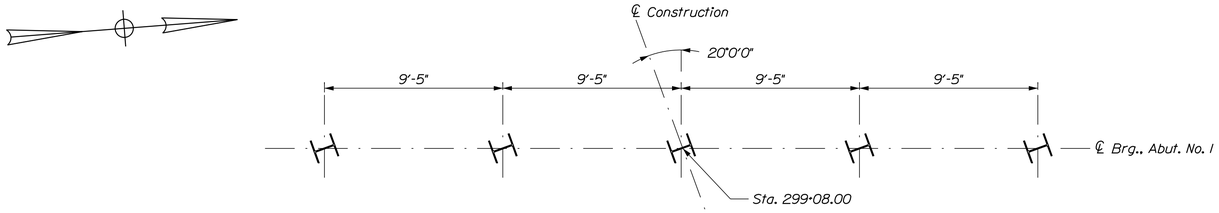


ABUTMENT NO. 1 PILE PLAN

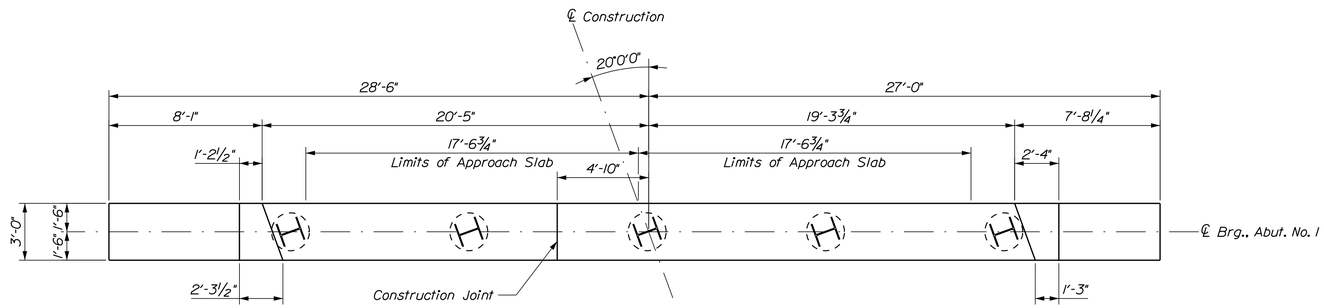


ABUTMENT NO. 1 PLAN

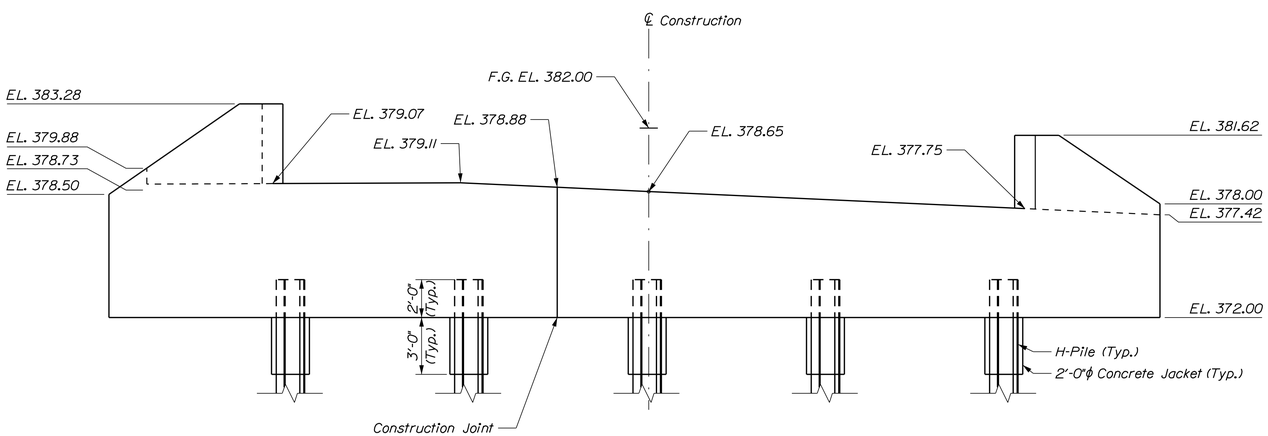


ABUTMENT NO. 1 ELEVATION

## ABUTMENT NOTES

1. Reinforcing steel shall have a minimum concrete cover of 2 inches in the walls unless otherwise noted.

2. Place 4-in. diameter drains in the breastwall and wingwalls at 10-ft maximum spacing. The exact location will be determined by the Resident.

3. Place the parapet portions of the wingwalls after erection of the precast units to ensure an accurate match with the superstructure.

4. Cover joints where waterstops are not required in accordance with Standard Details Section 502.

5. Payment for the concrete jackets around the tops of the H-piles will not be paid for directly, but will be considered incidental to Pay Item 502.219, Structural Concrete Abutments and Retaining Walls. Fill Concrete may be used for the concrete jackets. Payment for excavation necessary to construct the concrete jackets will be considered incidental to Contract items.

6. Adjust the abutment seat elevations in accordance with Special Provision 535 - Precast, Prestressed Concrete Superstructure (Camber).

## PILE NOTES

1. The maximum factored pile load is 353 kips including downdrag for the Strength I limit state.

2. H-pile material shall be ASTM A 572, Grade 50.

3. Estimate of piles required:

   Abutment No. 1: 5 ~ HP 14x89 @ 108 feet
   Abutment No. 2: 5 ~ HP 14x89 @ 111 feet

The order lengths of the piles shall include an additional 5 feet of length for each test pile to accommodate dynamic test piling equipment.

4. All piles shall be equipped with a pile tip in accordance with Standard Specifications Subsection 501.048 - Prefabricated Pile Tips.

5. Piles shall be driven to the required resistance on or within bedrock in accordance with Standard 501 - Foundation Piles.

6. The Contractor shall perform and submit a wave equation analysis for review and acceptance by the Resident. The maximum allowable driving stress is 0.90 times Fy. The submittal analyses shall include the proposed stopping criteria based on the wave equation analysis and the proposed driving system.

7. The Contractor shall perform 2 dynamic load tests with 24 hour (min.) restrike tests to confirm the nominal capacity of the piles. The required nominal resistance for pile is the factored axial pile load divided by a resistance factor of 0.65 per LRFD Specifications. The dynamic test shall be performed on the first production pile driven at each abutment. The Contractor may drive production piles to the preliminary driving criteria. However, pile cut-off will not be permitted until completion of restrike testing and establishment of final driving criteria.

STATE OF MAINE
DEPARTMENT OF TRANSPORTATION

STP-1791(200)

WIN 17912.00

BRIDGE NO. 2261

BRIDGE PLANS

| | | | |
|---|---|---|---|
| PROJ. MANAGER | J. STILWELL | | |
| DESIGN-DETAILED | RMN | DJB/LSF | DEC 2018 |
| CHECKED-REVIEWED | JGS | SJW | DEC 2018 |
| DESIGN2-DETAILED2 | | | |
| DESIGN3-DETAILED3 | | | |
| REVISIONS 1 | | | |
| REVISIONS 2 | | | |
| REVISIONS 3 | | | |
| REVISIONS 4 | | | |
| FIELD CHANGES | | | |

BY | DATE

SIGNATURE

P.E. NUMBER

DATE

EDDY FLATS BRIDGE
SACO RIVER OVERFLOW
FRYEBURG OXFORD COUNTY

ABUTMENT NO. 1
PLAN AND ELEVATION

SHEET NUMBER

B14

OF B22

Filename: ...\B14_Abut_No1_Plan_Elev.dgn Division: BRIDGE Username: sjwilliams Date:12/14/2018

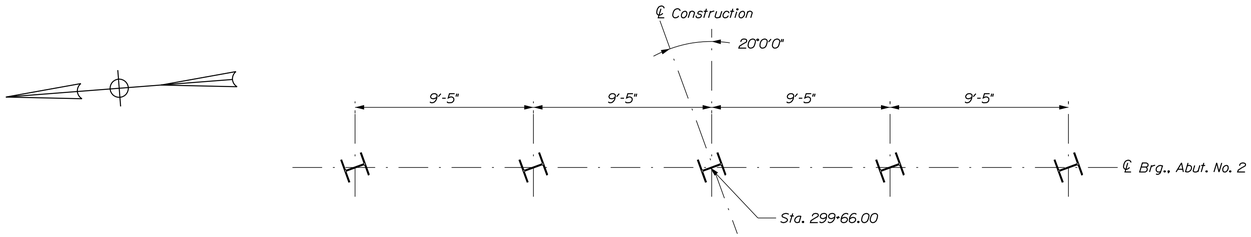


ABUTMENT NO. 2 PILE PLAN

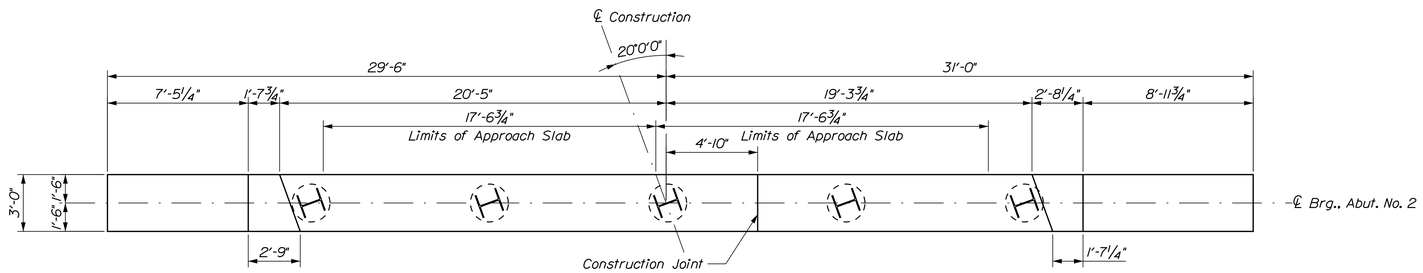


ABUTMENT NO. 2 PLAN

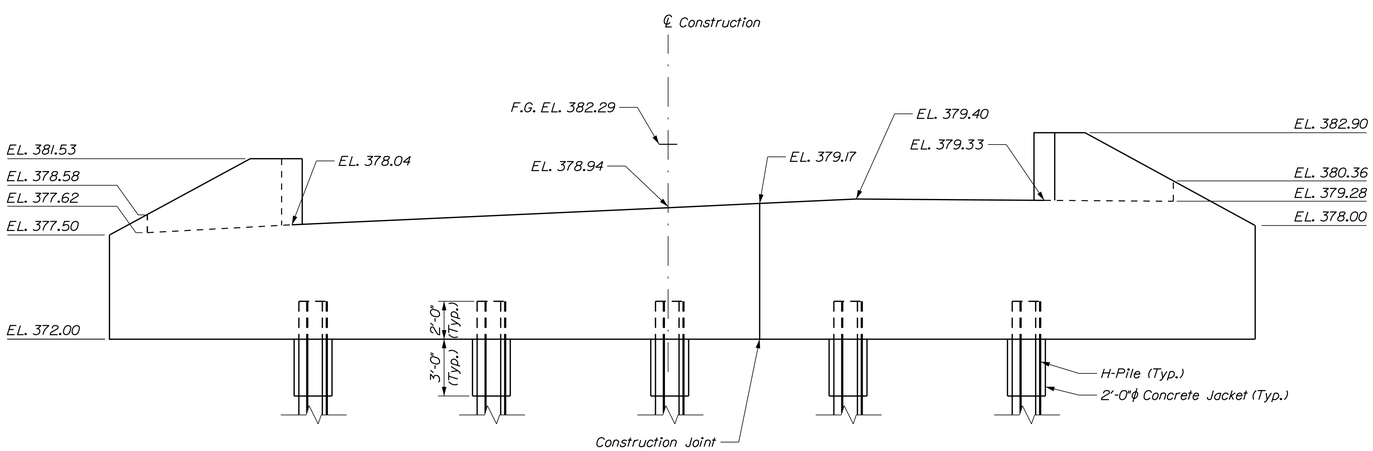


ABUTMENT NO. 2 ELEVATION

STATE OF MAINE
DEPARTMENT OF TRANSPORTATION

STP-1791(200)

WIN 17912.00

BRIDGE NO. 2261

BRIDGE PLANS

| | | | |
|---|---|---|---|
| PROJ. MANAGER | J. STILWELL | | |
| DESIGN-DETAILED | RMN | DJB/LSF | DEC 2018 |
| CHECKED-REVIEWED | JGS | SJW | DEC 2018 |
| DESIGN2-DETAILED2 | | | |
| DESIGN3-DETAILED3 | | | |
| REVISIONS 1 | | | |
| REVISIONS 2 | | | |
| REVISIONS 3 | | | |
| REVISIONS 4 | | | |
| FIELD CHANGES | | | |

SIGNATURE

P.E. NUMBER

DATE

EDDY FLATS BRIDGE
SACO RIVER OVERFLOW
FRYEBURG OXFORD COUNTY

ABUTMENT NO. 2
PLAN AND ELEVATION

SHEET NUMBER

B15

OF B22

Filename: ...\B15_Abut_No2_Plan_Elev.dgn Division: BRIDGE Username: lflanders Date:12/14/2018

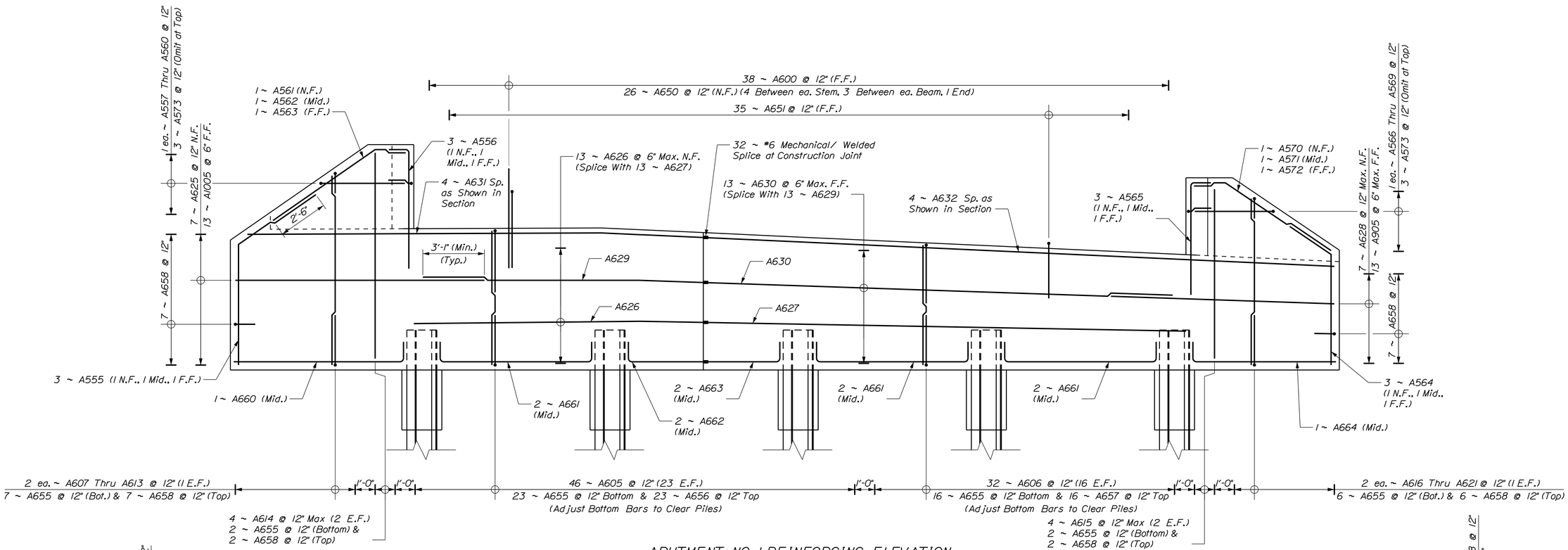


ABUTMENT NO. 1 REINFORCING ELEVATION

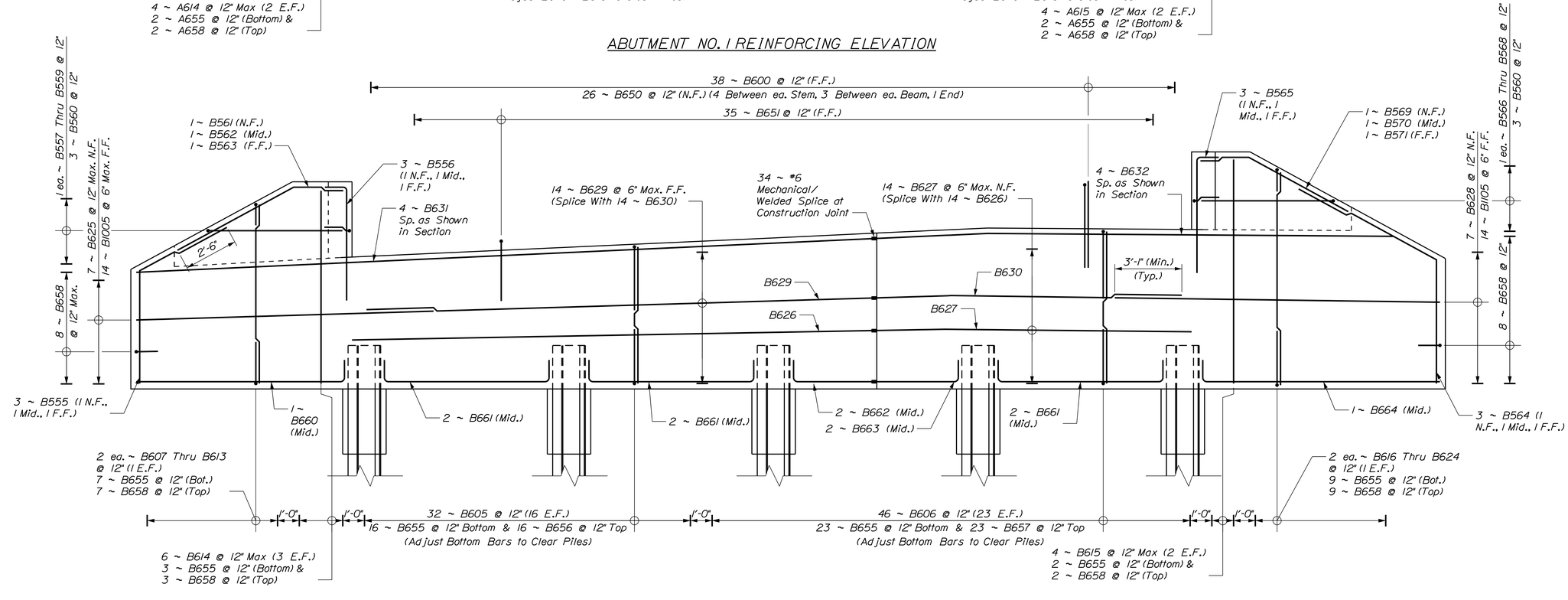


ABUTMENT NO. 2 REINFORCING ELEVATION

STATE OF MAINE
DEPARTMENT OF TRANSPORTATION

STP-1791(200)

BRIDGE NO. 2261

WIN
17912.00

BRIDGE PLANS

| PROJ. MANAGER | J. STILWELL | BY | DATE |
|---|---|---|---|
| DESIGN-DETAILED | RWN | DJBULSF | DEC 2018 |
| CHECKED-REVIEWED | JGS | SJW | DEC 2018 |
| DESIGN2-DETAILED2 | | | |
| DESIGN3-DETAILED3 | | | |
| REVISIONS: 1 | | | |
| REVISIONS: 2 | | | |
| REVISIONS: 3 | | | |
| REVISIONS: 4 | | | |
| FIELD CHANGES | | | |

SIGNATURE

P.E. NUMBER

DATE

EDDY FLATS BRIDGE
SACO RIVER OVERFLOW
FRYEBURG OXFORD COUNTY

ABUTMENT REINFORCING

SHEET NUMBER

B16

OF B22

Filename: ...\BRIDGE\MSTA\B16_Abut_Rein.dgn Division: BRIDGE Username: lflanders Date:12/14/2018

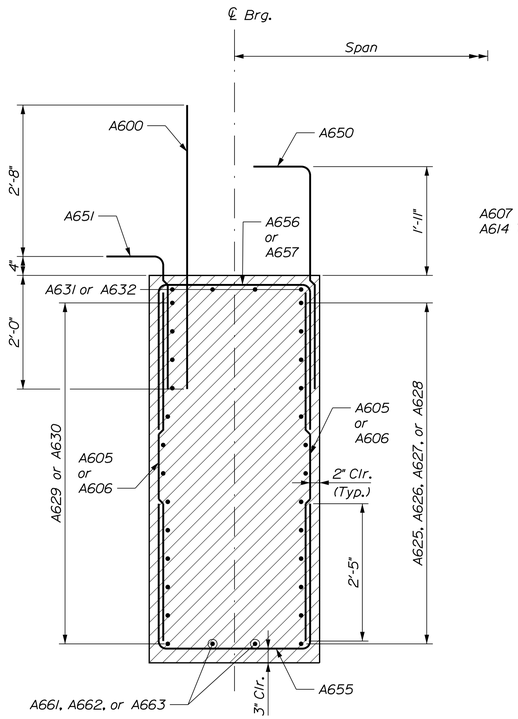


ABUTMENT NO. 1 TYPICAL SECTION

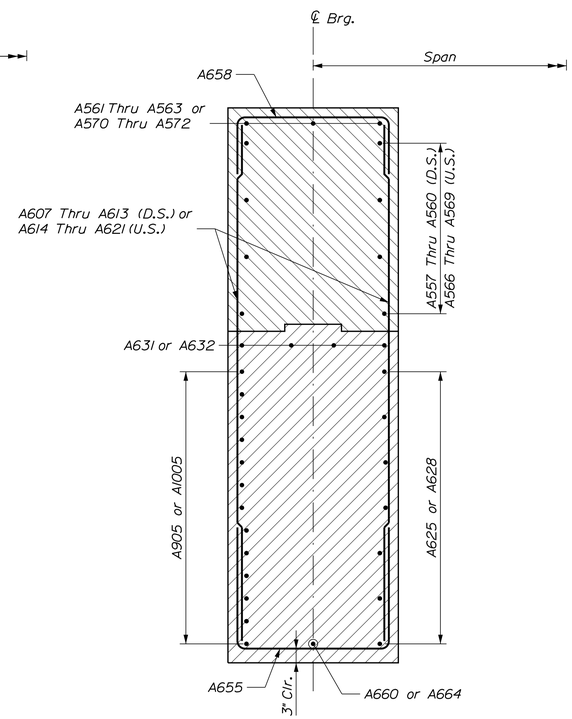


ABUTMENT NO. 1 TYPICAL WINGWALL SECTION

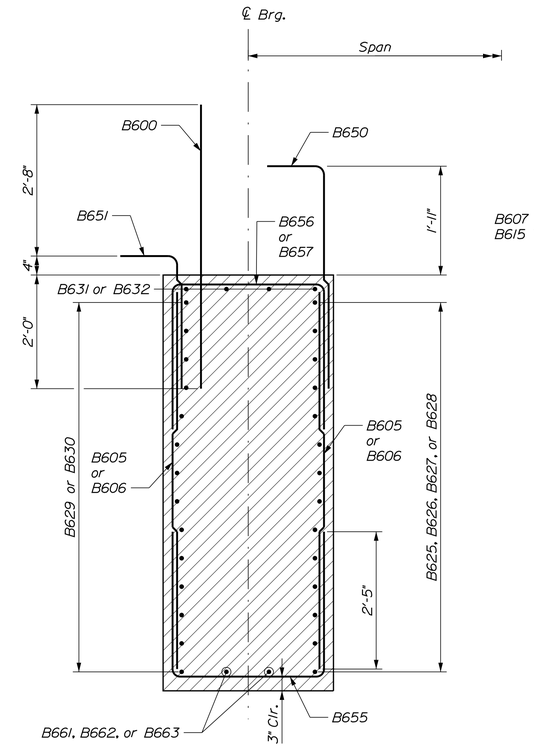


ABUTMENT NO. 2 TYPICAL SECTION

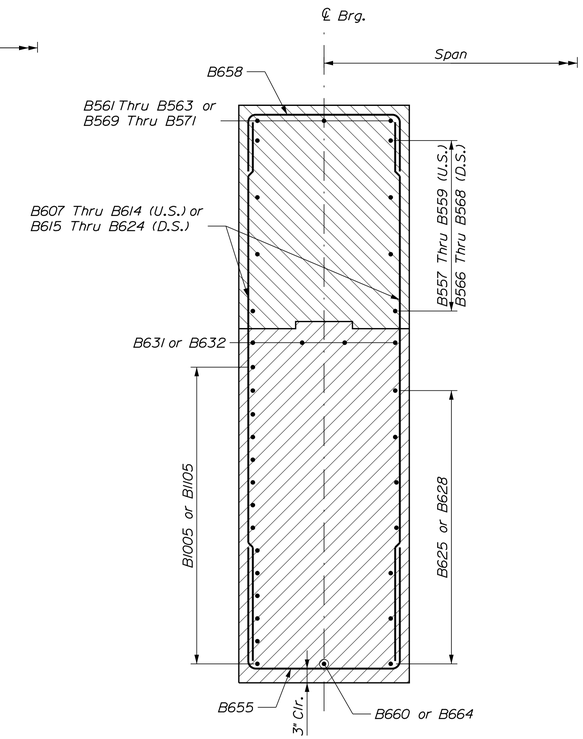


ABUTMENT NO. 2 TYPICAL WINGWALL SECTION

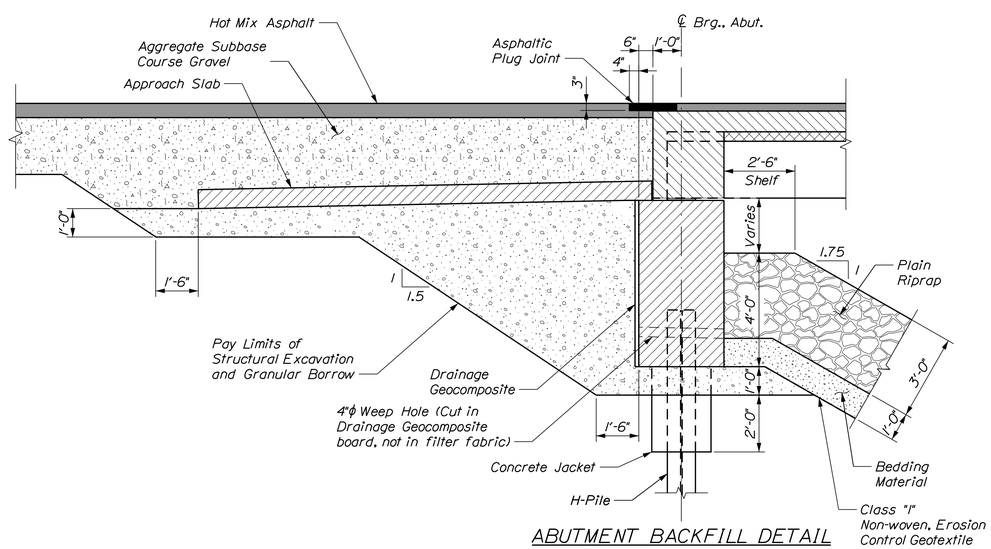


ABUTMENT BACKFILL DETAIL

STATE OF MAINE
DEPARTMENT OF TRANSPORTATION

STP-1791(200)

WIN 17912.00

BRIDGE NO. 2261

BRIDGE PLANS

| PROJ. MANAGER | J. STILWELL | BY | DATE |
|---|---|---|---|
| DESIGN-DETAILED | RMN | DJB/LSF | DEC 2018 |
| CHECKED-REVIEWED | JGS | SJW | DEC 2018 |
| DESIGN2-DETAILED2 | | | |
| DESIGN3-DETAILED3 | | | |
| REVISIONS 1 | | | |
| REVISIONS 2 | | | |
| REVISIONS 3 | | | |
| REVISIONS 4 | | | |
| FIELD CHANGES | | | |

SIGNATURE

P.E. NUMBER

DATE

EDDY FLATS BRIDGE
SACO RIVER OVERFLOW
FRYEBURG OXFORD COUNTY

# ABUTMENT SECTIONS

SHEET NUMBER

B17

OF B22

Filename: ...\MSTA\B17_Abut_Sections.dgn Division: BRIDGE Username: lflanders Date:12/14/2018

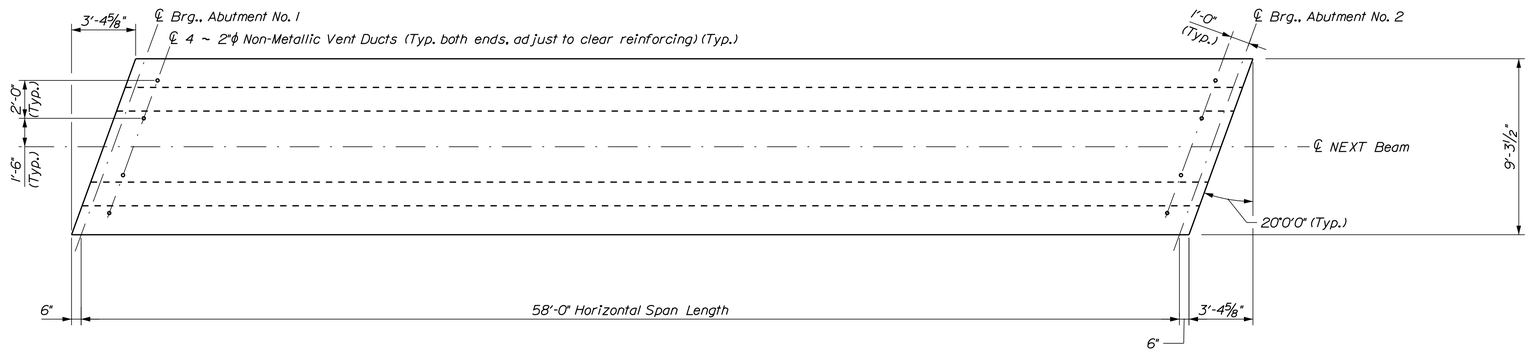


NEXT 28F BEAM PLAN

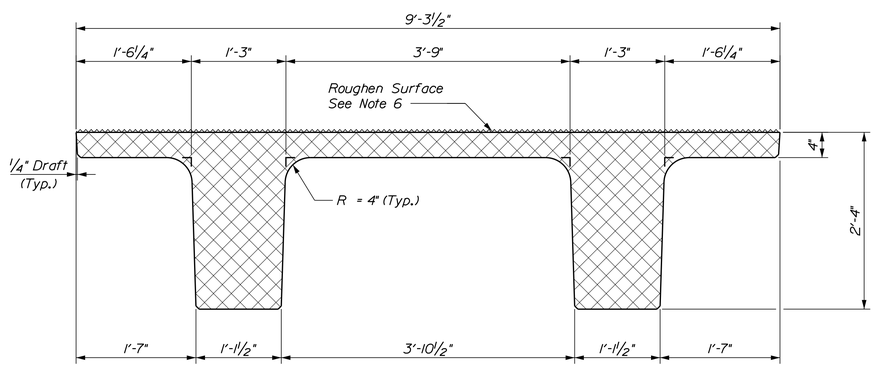


NEXT 28 F BEAM SECTION

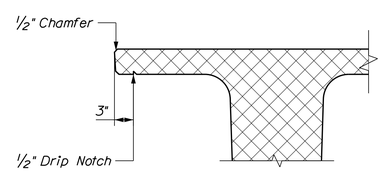


FASCIA OVERHANG DETAIL

## PRECAST CONCRETE SUPERSTRUCTURE NOTES

1. NEXT F Beams are a non-proprietary shape developed by PCI NORTHEAST (PCINE). Standardized section properties and details may be found at http://www.pcine.org.

2. The estimated camber at release is 1.19 inches and the estimated camber at erection is 2 inches. The estimated deflection from the cast-in-place deck slab is 0.52 inches at midspan. The estimated deflection from superimposed dead loads is 0.16 inches at midspan.

3. Prestressing strands shall be 0.6-in. diameter. The tensioning force is 44 kips per prestressing strand.

4. Reinforcing steel shall have a minimum concrete cover of 2 inches unless otherwise noted.

5. The drilling of holes in the prestressed beams and the use of powder actuated tools on the beams will not be permitted.

6. The top surface of the upper flange of the prestressed beams shall be raked to a surface roughness of ¼inch, except at 10-foot increments along the centerline of each beam. At these locations, a flattened area of sufficient size shall be left to facilitate taking elevations for setting bottom of slab elevations.

7. A maximum of 50% of the strands in the bottom 3 rows may be debonded 6 inches from the end of the beam. All 4 top row strands shall be fully bonded.

8. Lifting loops and temporary storage/shipping dunnage shall be a maximum of 2 feet from each beam end.

9. All reinforcing steel for precast NEXT Beams shall be ASTM A615 Grade 60.

10. Concrete retarding admixtures shall be applied to the forms surfaces of the NEXT beam stems that will come in contact with the cast-in-place concrete end diaphragms. All such surfaces shall be power washed with water prior to installation to provide a nominal ⅛-inch roughened surface with exposed aggregate. Alternate methods of achieving an equivalent roughened surface may be proposed. Payment for achieving the surface finish will be considered incidental to related contract items.

STATE OF MAINE
DEPARTMENT OF TRANSPORTATION

STP-1791(200)

WIN 17912.00

BRIDGE NO. 2261

BRIDGE PLANS

| | | BY | DATE |
|---|---|---|---|
| PROJ. MANAGER | J. STILWELL | | |
| DESIGN-DETAILED | RMN | DJB/LSF | DEC 2018 |
| CHECKED-REVIEWED | JGS | SJW | DEC 2018 |
| DESIGN2-DETAILED2 | | | |
| DESIGN3-DETAILED3 | | | |
| REVISIONS 1 | | | |
| REVISIONS 2 | | | |
| REVISIONS 3 | | | |
| REVISIONS 4 | | | |
| FIELD CHANGES | | | |

SIGNATURE

P.E. NUMBER

DATE

EDDY FLATS BRIDGE
SACO RIVER OVERFLOW
FRYEBURG OXFORD COUNTY

PRECAST NEXT BEAM
PLAN AND ELEVATION

SHEET NUMBER

B18

OF B22

Filename: ...\MSTA\B18_NEXT_Plan_Elev.dgn Division: BRIDGE Username: lflanders Date:12/14/2018

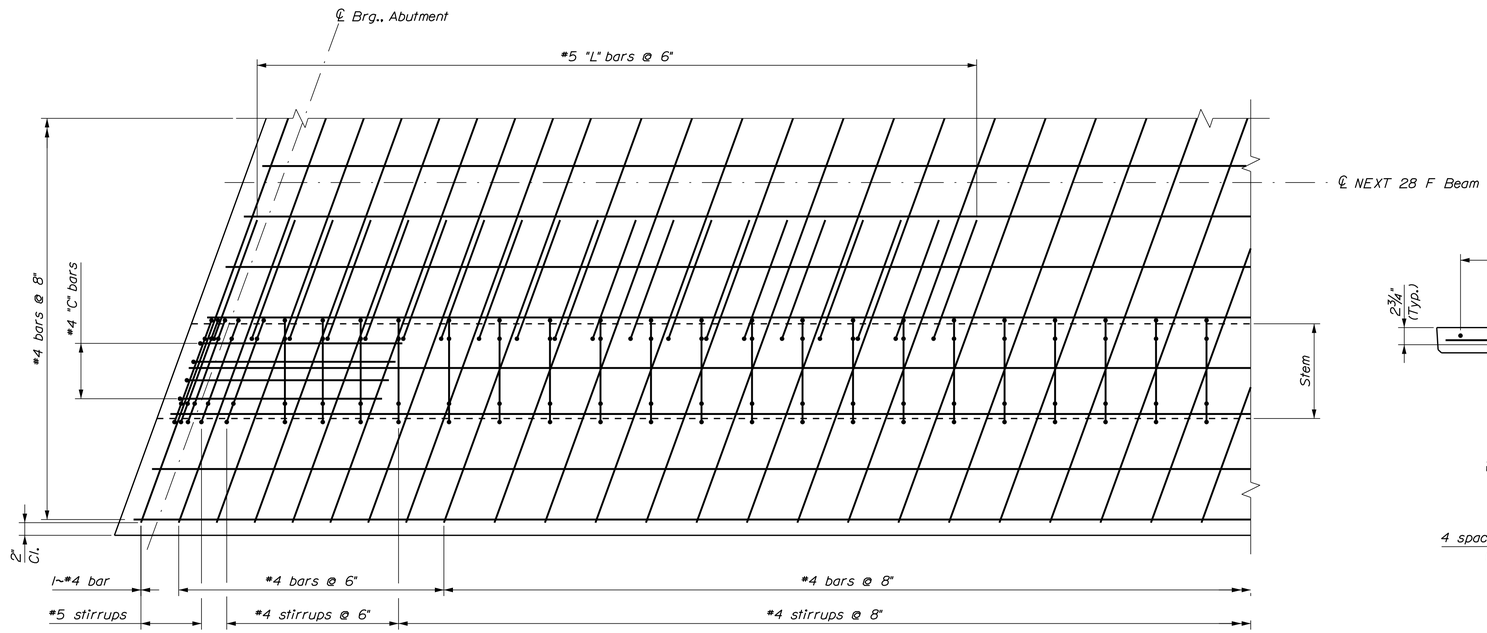


NEXT F BEAM PART REINFORCING PLAN

Prestressing strands not shown for clarity

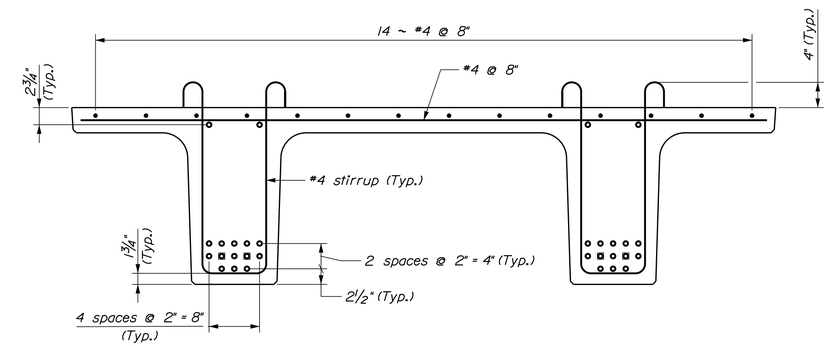


NEXT 28 F BEAM TYPICAL SECTION

◘ Strands debonded 4 ft.

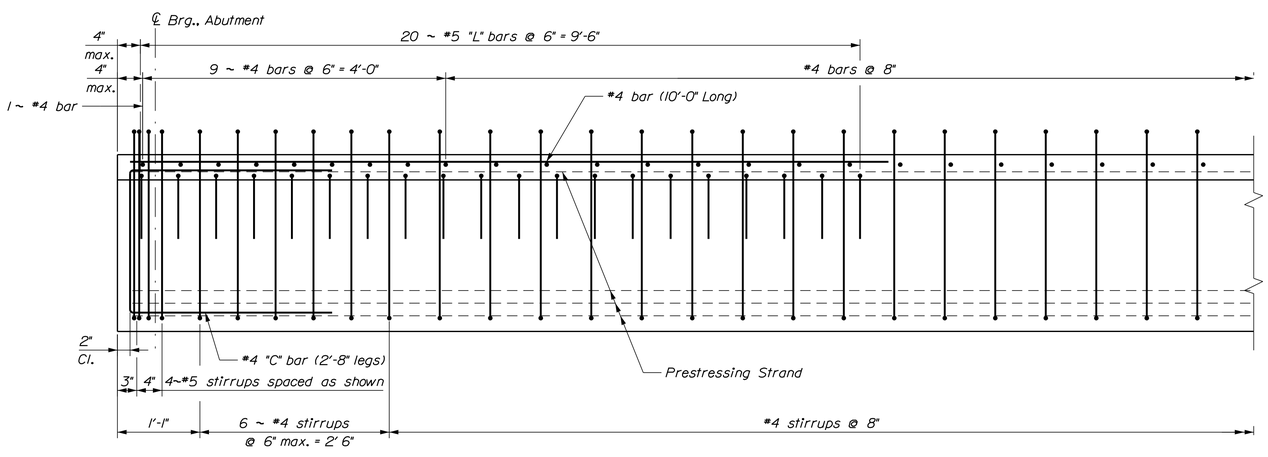


NEXT F BEAM PART REINFORCING ELEVATION

Top flange longitudinal mild reinforcing not shown for clarity

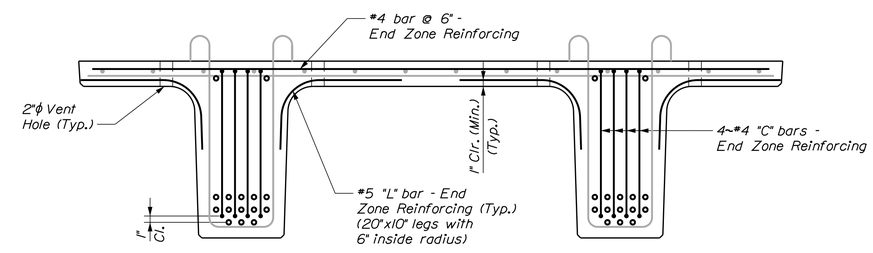


NEXT 28 F BEAM TYPICAL SECTION - AT ENDS

STATE OF MAINE
DEPARTMENT OF TRANSPORTATION

STP-1791(200)

WIN 17912.00

BRIDGE NO. 2261

BRIDGE PLANS

| PROJ. MANAGER | J. STILWELL | BY | DATE |
|---|---|---|---|
| DESIGN-DETAILED | RMN | DJB/LSF | DEC 2018 |
| CHECKED-REVIEWED | JGS | SJW | DEC 2018 |
| DESIGN2-DETAILED2 | | | |
| DESIGN3-DETAILED3 | | | |
| REVISIONS 1 | | | |
| REVISIONS 2 | | | |
| REVISIONS 3 | | | |
| REVISIONS 4 | | | |
| FIELD CHANGES | | | |

SIGNATURE

P.E. NUMBER

DATE

EDDY FLATS BRIDGE
SACO RIVER OVERFLOW
FRYEBURG OXFORD COUNTY

PRECAST NEXT BEAM DETAILS (1 OF 2)

SHEET NUMBER

B19

OF B22

Filename: ...\MSTA\B19_NEXT_Details_1.dgn Division: BRIDGE Username: lflanders Date:12/14/2018

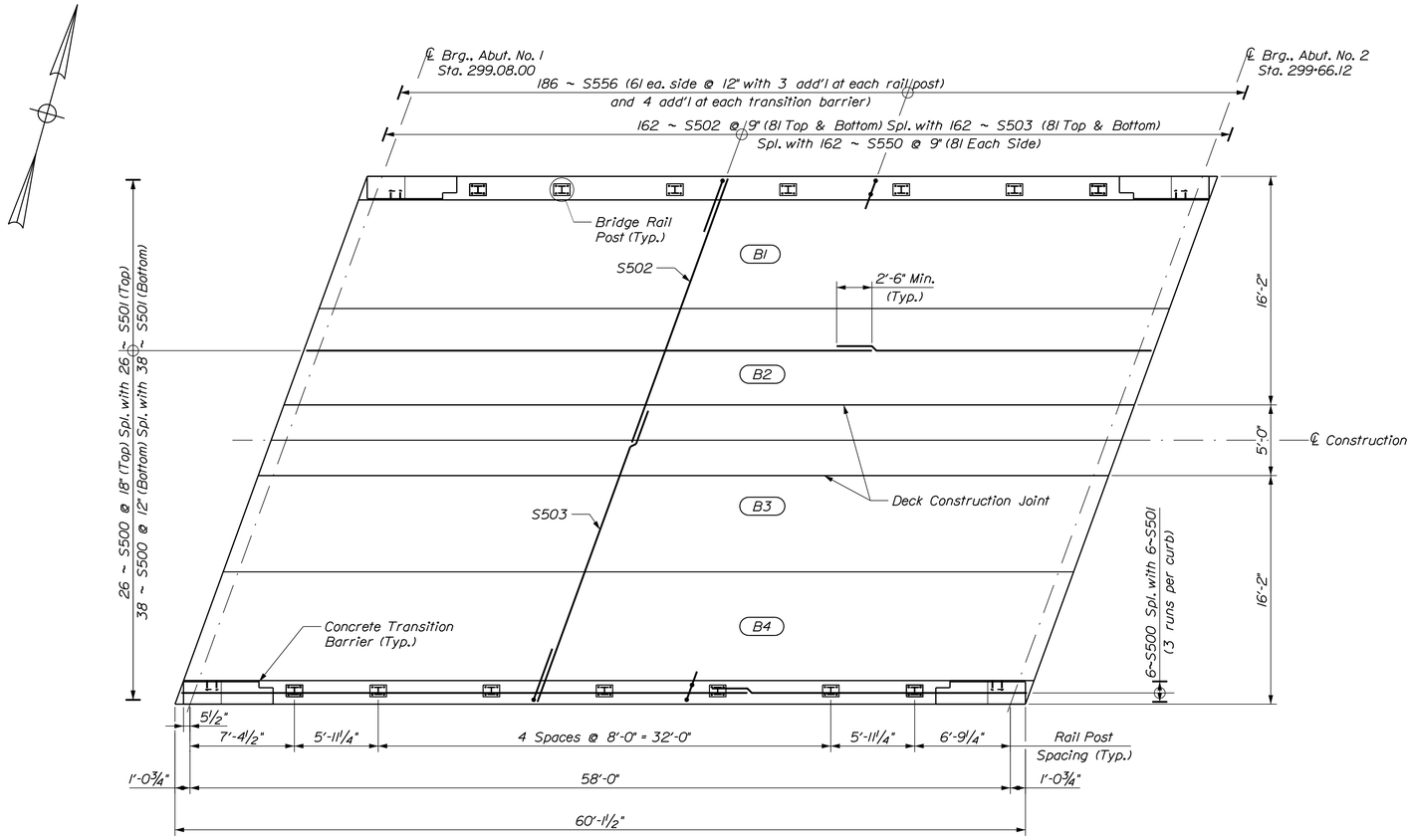


## SUPERSTRUCTURE PLAN

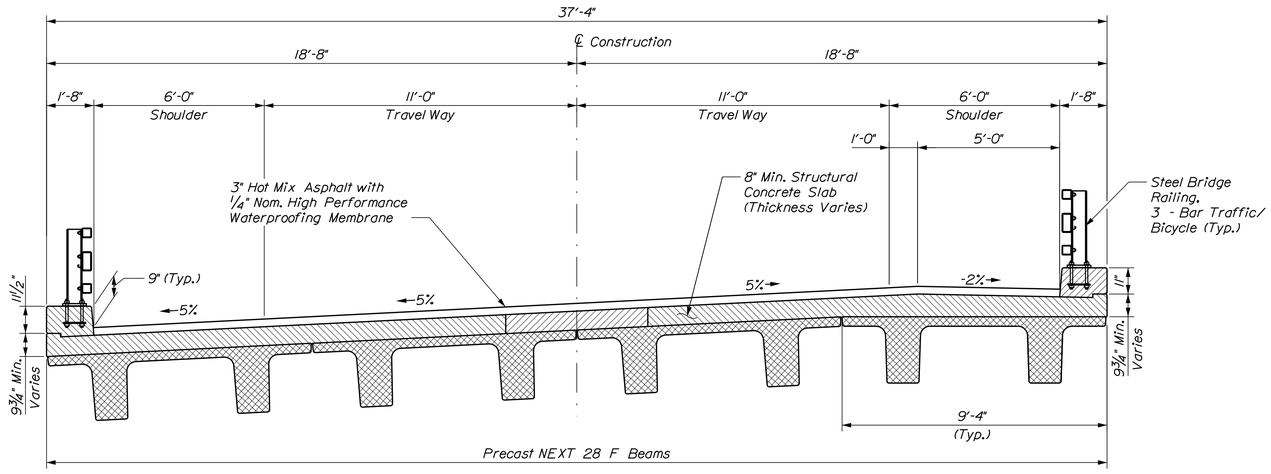


## PROPOSED TRANSVERSE SECTION

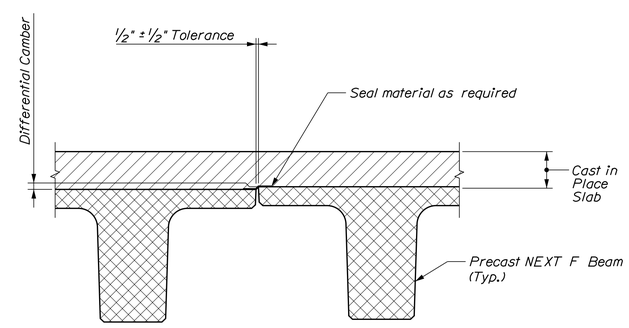


## NEXT BEAM GAP FORM DETAIL

## SUPERSTRUCTURE NOTES

1. The deck thickness and curb stirrup dimensions shall be adjusted in accordance with Special Provision 535, Precast, Prestressed Concrete Superstructure - Camber.

2. Reinforcing steel shall have a minimum concrete cover of 2 inches unless otherwise noted.

3. Form a one inch V-groove on the fascias at the horizontal joint between the curb and slab.

4. The superstructure slab concrete for each stage shall be placed continuously, including both end diaphragms, and shall be kept plastic until the entire placement has been made.

5. End diaphragm concrete will be paid for under Item No. 502.261, Structural Concrete Roadway and Sidewalk Slabs on Concrete Bridges.

6. The Contractor shall install Transition Barrier vertical closed stirrups, as shown in Standard Details Section 526, prior to the placement of the curb concrete. All reinforcing steel in the Transition Barrier shall be stainless steel.

7. Payment for Seal Material and will not be made directly and shall be considered incidental to related contract items.

## ELASTOMERIC BEARING NOTES

1. The shear modulus of the elastomer shall be 260 psi.

2. Elastomeric pads shall have a Shore A Durometer hardness of 70 and shall conform to the requirements of the latest edition of Section 18.2 of the AASHTO LRFD Bridge Construction Specifications.

3. Elastomeric Bearing Pads will not be paid for directly but will be considered incidental to related Contract items. No separate payment will be made.

STATE OF MAINE
DEPARTMENT OF TRANSPORTATION

STP-17791(200)

WIN 17912.00

BRIDGE NO. 2261

BRIDGE PLANS

| | | BY | DATE |
|---|---|---|---|
| PROJ. MANAGER | J. STILWELL | | |
| DESIGN-DETAILED | RMN | DJB/LSF | DEC 2018 |
| CHECKED-REVIEWED | JCS | SJW | DEC 2018 |
| DESIGN2-DETAILED2 | | | |
| DESIGN3-DETAILED3 | | | |
| REVISIONS 1 | | | |
| REVISIONS 2 | | | |
| REVISIONS 3 | | | |
| REVISIONS 4 | | | |
| FIELD CHANGES | | | |

SIGNATURE

P.E. NUMBER

DATE

EDDY FLATS BRIDGE
SACO RIVER OVERFLOW
FRYEBURG OXFORD COUNTY

SUPERSTRUCTURE PLAN

SHEET NUMBER

B20

OF B22

Filename: ...\MSTA\B20_Superstructure.dgn Division: BRIDGE Username: lflanders Date:12/14/2018

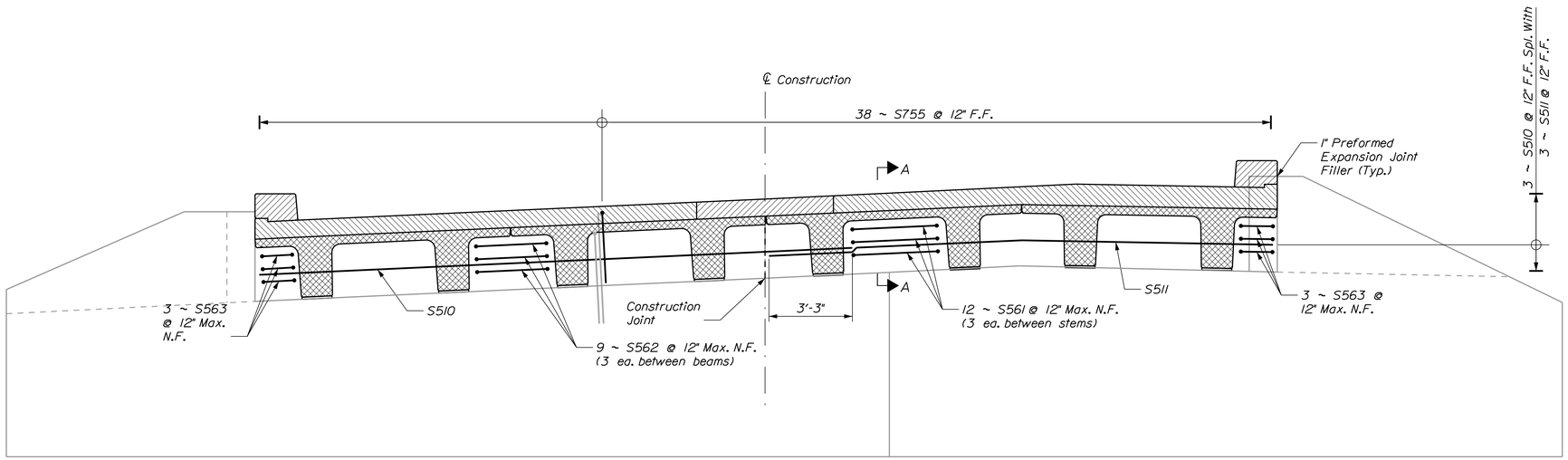


## END DIAPHRAGM REINFORCEMENT ELEVATION

Abutment No. 2 End Shown, Abutment No. 1 End Opposite Hand

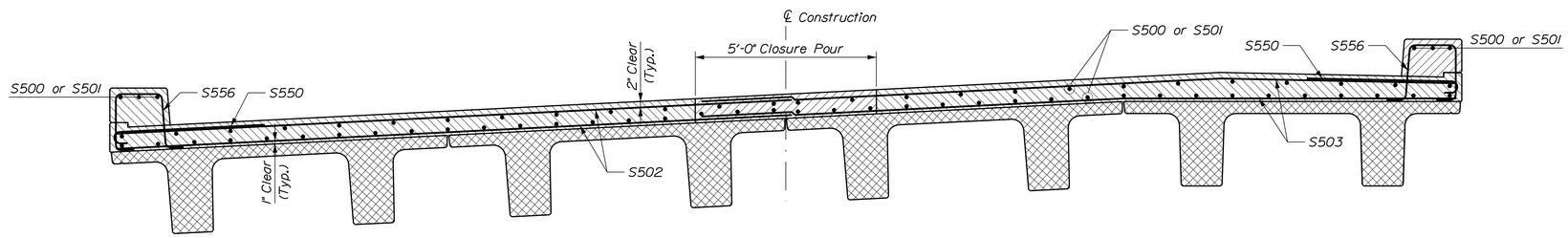


## TYPICAL DECK REINFORCING SECTION

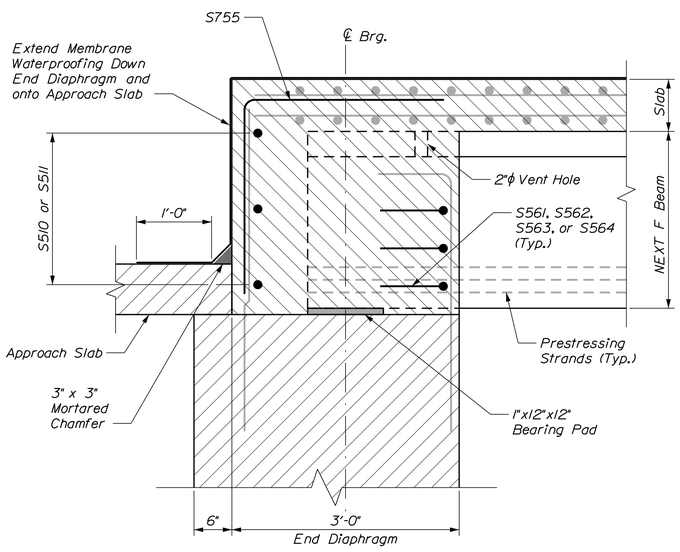


## SECTION A-A

## NOTES

1. Payment for Preformed Expansion Joint Filler and mortared chamfer will not be made directly and shall be considered incidental to related Contract Items.

STATE OF MAINE
DEPARTMENT OF TRANSPORTATION

STP-1791(200)

WIN 17912.00

BRIDGE NO. 2261

BRIDGE PLANS

| | | BY | DATE |
|---|---|---|---|
| PROJ. MANAGER | J. STILWELL | | |
| DESIGN-DETAILED | RMN | DJB/LSF | DEC 2018 |
| CHECKED-REVIEWED | JGS | SJW | DEC 2018 |
| DESIGN2-DETAILED2 | | | |
| DESIGN3-DETAILED3 | | | |
| REVISIONS 1 | | | |
| REVISIONS 2 | | | |
| REVISIONS 3 | | | |
| REVISIONS 4 | | | |
| FIELD CHANGES | | | |

SIGNATURE

P.E. NUMBER

DATE

EDDY FLATS BRIDGE
SACO RIVER OVERFLOW
FRYEBURG OXFORD COUNTY

SUPERSTRUCTURE DETAILS

SHEET NUMBER

B21

OF B22

Filename: ...\MSTA\B21_End_Dia_Rein.dgn Division: BRIDGE Username: lflanders Date:12/14/2018

Date:12/14/2018 Username: lflanders Division: BRIDGE Filename: ...\MSTA\B22 _Rebar_Schedule.dgn

## STRAIGHT BARS

| MARK | QTY. | LENGTH | LOCATION |
|---|---|---|---|
| **Abutment No. 1** | | | |
| A600 | 38 | 5'-0" | Abutment to End Dia. Conn. |
| A605 | 46 | 6'-0" | Abutment Vertical E.F. |
| A606 | 32 | 5'-5" | " |
| A607 | 2 | 6'-0" | D.S. Wing Vertical E.F. |
| A608 | 2 | 6'-8" | " |
| A609 | 2 | 7'-5" | " |
| A610 | 2 | 8'-1" | " |
| A611 | 2 | 8'-9" | " |
| A612 | 2 | 9'-6" | " |
| A613 | 2 | 10'-2" | " |
| A614 | 4 | 10'-8" | " |
| A615 | 4 | 9'-0" | U.S. Wing Vertical E.F. |
| A616 | 2 | 8'-11" | " |
| A617 | 2 | 8'-3" | " |
| A618 | 2 | 7'-6" | " |
| A619 | 2 | 6'-10" | " |
| A620 | 2 | 6'-2" | " |
| A621 | 2 | 5'-6" | " |
| A625 | 7 | 12'-6" | Horizontal N.F. |
| A626 | 13 | 14'-6" | " |
| A627 | 13 | 24'-0" | " |
| A628 | 7 | 11'-0" | " |
| A629 | 13 | 14'-6" | Horizontal F.F. |
| A630 | 13 | 23'-6" | " |
| A631 | 4 | 22'-8" | Horizontal Top of Abutment |
| A632 | 4 | 31'-6" | " |
| A905 | 13 | 12'-2" | U.S. Wing F.F. |
| A1005 | 13 | 14'-5" | D.S. Wing F.F. |
| **Abutment No. 2** | | | |
| B600 | 38 | 5'-0" | Abutment to End Dia. Conn. |
| B605 | 32 | 5'-7" | Abutment Vertical E.F. |
| B606 | 46 | 6'-4" | " |
| B607 | 2 | 5'-6" | Wing Vertical E.F. |
| B608 | 2 | 6'-0" | " |
| B609 | 2 | 6'-7" | " |
| B610 | 2 | 7'-1" | " |
| B611 | 2 | 7'-7" | " |
| B612 | 2 | 8'-1" | " |
| B613 | 2 | 8'-7" | " |
| B614 | 6 | 9'-0" | " |
| B615 | 4 | 10'-4" | " |
| B616 | 2 | 10'-2" | " |
| B617 | 2 | 9'-8" | " |
| B618 | 2 | 9'-1" | " |
| B619 | 2 | 8'-7" | " |
| B620 | 2 | 8'-0" | " |
| B621 | 2 | 7'-6" | " |
| B622 | 2 | 6'-11" | " |
| B623 | 2 | 6'-5" | " |
| B624 | 2 | 5'-10" | " |
| B625 | 7 | 13'-8" | Horizontal N.F. |
| B626 | 14 | 24'-0" | " |
| B627 | 14 | 14'-4" | " |
| B628 | 7 | 15'-0" | " |
| B629 | 14 | 23'-6" | Horizontal F.F. |
| B630 | 14 | 13'-11" | " |
| B631 | 4 | 34'-0" | Horizontal Top of Abutment |
| B632 | 4 | 23'-8" | " |
| B1005 | 14 | 15'-7" | U.S. Wing F.F. |
| B1105 | 14 | 17'-10" | D.S. Wing F.F. |

| MARK | QTY. | LENGTH | LOCATION |
|---|---|---|---|
| **Approach Slab** | | | |
| AS501 | 32 | 18'-6" | Transverse Stage 1 |
| AS502 | 32 | 17'-2" | Transverse Stage 2 |
| AS601 | 132 | 16'-0" | Longitudinal Bottom |
| **Superstructure** | | | |
| S500 | 70 | 40'-0" | Longitudinal Top & Bottom |
| S501 | 70 | 22'-3" | Longitudinal Top & Bottom |
| S502 | 162 | 19'-10" | Transverse Top & Bottom |
| S503 | 162 | 22'-2" | Transverse Top & Bottom |
| S510 | 6 | 23'-2" | End Diaphragm F.F. |
| S511 | 6 | 19'-7" | End Diaphragm F.F. |

## BENT BARS

| MARK | QTY. | LENGTH | TYPE | A | B | C | D | E | F | G | H | O | R | LOCATION |
|---|---|---|---|---|---|---|---|---|---|---|---|---|---|---|
| **Abutment No. 1** | | | | | | | | | | | | | | |
| A555 | 3 | 10'-11" | V | | | | 6'-1" | 4'-10" | | | 3'-11 1/4" | | | D.S. End of Wing Vertical |
| A556 | 3 | 6'-10" | L | 6'-0" | 10" | | | | | | | | | D.S. Wing Vertical |
| A557 | 1 | 15'-1" | U | | 5'-10" | 2'-6" | 6'-9" | | | | | | | D.S. Wing Horizontal |
| A558 | 1 | 12'-1" | U | | 4'-4" | 2'-6" | 5'-3" | | | | | | | " |
| A559 | 1 | 9'-3" | U | | 2'-11" | 2'-6" | 3'-10" | | | | | | | " |
| A560 | 1 | 6'-5" | U | | 1'-6" | 2'-6" | 2'-5" | | | | | | | " |
| A561 | 1 | 7'-7" | V | | | | 1'-9" | 5'-10" | | | 3'-4" | | | D.S. Top of Wing |
| A562 | 1 | 7'-1" | V | | | | 1'-3" | 5'-10" | | | 3'-4" | | | " |
| A563 | 1 | 6'-7" | V | | | | 9" | 5'-10" | | | 3'-4" | | | " |
| A564 | 3 | 8'-2" | V | | | | 5'-6" | 2'-8" | | | 2'-2 1/2" | | | U.S. End of Wing Vertical |
| A565 | 3 | 6'-6" | L | 5'-8" | 10" | | | | | | | | | U.S. Wing Vertical |
| A566 | 1 | 15'-10" | U | | 6'-2 1/2" | 2'-6" | 7'-1 1/2" | | | | | | | U.S. Wing Horizontal |
| A567 | 1 | 12'-10" | U | | 4'-8" | 2'-6" | 5'-8" | | | | | | | " |
| A568 | 1 | 9'-11" | U | | 3'-3" | 2'-6" | 4'-2" | | | | | | | " |
| A569 | 1 | 7'-0" | U | | 1'-9 1/2" | 2'-6" | 2'-8 1/2" | | | | | | | " |
| A570 | 1 | 7'-1 1/2" | V | | | | 9 1/2" | 6'-4" | | | 3'-7" | | | U.S. Top of Wing |
| A571 | 1 | 7'-7" | V | | | | 1'-3" | 6'-4" | | | 3'-7" | | | " |
| A572 | 1 | 8'-0" | V | | | | 1'-8" | 6'-4" | | | 3'-7" | | | " |
| A573 | 6 | 7'-8" | S13 | 0" | 2'-6" | 2'-8" | 2'-6" | | | 0" | 2'-6" | 11" | | Wing Transition |
| A650 | 26 | 4'-11" | L | 3'-11" | 1'-0" | | | | | | | | | N.F. End Dia. Connection |
| A651 | 35 | 3'-4" | L | 2'-4" | 1'-0" | | | | | | | | | A.S. Connection (F.F.) |
| A655 | 56 | 7'-8" | U | | 2'-6" | 2'-8" | 2'-6" | | | | | | | Bottom of Abutment |
| A656 | 23 | 8'-10" | U | | 3'-1" | 2'-8" | 3'-1" | | | | | | | Top of Abutment |
| A657 | 16 | 8'-6" | U | | 2'-11" | 2'-8" | 2'-11" | | | | | | | " |
| A658 | 31 | 4'-8" | U | | 1'-0" | 2'-8" | 1'-0" | | | | | | | Wing Ends & Tops |
| A660 | 1 | 9'-5" | L | 8'-5" | 1'-0" | | | | | | | | | Bottom Between Piles |
| A661 | 6 | 9'-5" | U | | 1'-0" | 7'-5" | 1'-0" | | | | | | | " |
| A662 | 2 | 4'-7" | L | 3'-7" | 1'-0" | | | | | | | | | " |
| A663 | 2 | 4'-10" | L | 3'-10" | 1'-0" | | | | | | | | | " |
| A664 | 1 | 8'-1" | L | 7'-1" | 1'-0" | | | | | | | | | " |
| **Abutment No. 2** | | | | | | | | | | | | | | |
| B555 | 3 | 9'-9" | V | | | | 5'-2" | 4'-7" | | | 4'-1" | | | U.S. End of Wing Vertical |
| B556 | 3 | 6'-0 1/2" | L | 5'-2 1/2" | 10" | | | | | | | | | U.S. Wing Vertical |
| B557 | 1 | 17'-9" | U | | 7'-2" | 2'-6" | 8'-1" | | | | | | | U.S. Wing Horizontal |
| B558 | 1 | 14'-1" | U | | 5'-4" | 2'-6" | 6'-3" | | | | | | | " |
| B559 | 1 | 10'-5" | U | | 3'-6" | 2'-6" | 4'-5" | | | | | | | " |
| B560 | 6 | 7'-8" | S13 | 0" | 2'-6" | 2'-8" | 2'-6" | | | 0" | 2'-6" | 11" | | Wings |
| B561 | 1 | 8'-6" | V | | | | 2'-5" | 6'-1" | | | 2'-10 3/4" | | | U.S. Top of Wing |
| B562 | 1 | 8'-0" | V | | | | 1'-11" | 6'-1" | | | 2'-10 3/4" | | | " |
| B563 | 1 | 7'-7" | V | | | | 1'-6" | 6'-1" | | | 2'-10 3/4" | | | " |
| B564 | 3 | 12'-10" | V | | | | 5'-7" | 7'-3" | | | 6'-4 1/4" | | | D.S. End of Wing Vertical |
| B565 | 3 | 6'-2" | L | 5'-4" | 10" | | | | | | | | | D.S. Wing Vertical |
| B566 | 1 | 17'-3" | U | | 6'-11" | 2'-6" | 7'-10" | | | | | | | D.S. Wing Horizontal |
| B567 | 1 | 13'-7" | U | | 5'-1" | 2'-6" | 6'-0" | | | | | | | " |
| B568 | 1 | 9'-11" | U | | 3'-3" | 2'-6" | 4'-2" | | | | | | | " |
| B569 | 1 | 6'-7 1/2" | V | | | | 1'-5" | 5'-2 1/2" | | | 2'-6" | | | D.S. Top of Wing |
| B570 | 1 | 7'-0 1/2" | V | | | | 1'-10" | 5'-2 1/2" | | | 2'-6" | | | " |
| B571 | 1 | 7'-6 1/2" | V | | | | 2'-4" | 5'-2 1/2" | | | 2'-6" | | | " |
| B650 | 26 | 4'-11" | L | 3'-11" | 1'-0" | | | | | | | | | N.F. End Dia. Connection |
| B651 | 35 | 3'-4" | L | 2'-4" | 1'-0" | | | | | | | | | A.S. Connection (F.F.) |
| B655 | 60 | 7'-8" | U | | 2'-6" | 2'-8" | 2'-6" | | | | | | | Bottom of Abutment |
| B656 | 16 | 9'-0" | U | | 3'-2" | 2'-8" | 3'-2" | | | | | | | Top of Abutment |
| B657 | 23 | 8'-10" | U | | 3'-1" | 2'-8" | 3'-1" | | | | | | | " |
| B658 | 37 | 4'-8" | U | | 1'-0" | 2'-8" | 1'-0" | | | | | | | Wing Ends & Tops |
| B660 | 1 | 10'-7" | L | 9'-7" | 1'-0" | | | | | | | | | Bottom Between Piles |
| B661 | 6 | 9'-5" | U | | 1'-0" | 7'-5" | 1'-0" | | | | | | | " |
| B662 | 2 | 4'-10" | L | 3'-10" | 1'-0" | | | | | | | | | " |
| B663 | 2 | 4'-7" | L | 3'-7" | 1'-0" | | | | | | | | | " |
| B664 | 1 | 11'-11" | L | 10'-11" | 1'-0" | | | | | | | | | " |
| **Superstructure** | | | | | | | | | | | | | | |
| S550 | 162 | 6'-5" | C | 7" | 5'-10" | 0" | | | | | | | | Overhang Hook |
| S556 | 186 | 5'-9" | SC | 10" | 1'-5" | 1'-3" | 1'-5" | | | 10" | | 1'-4" | | Curb |
| S561 | 24 | 5'-2" | U | | 10" | 3'-6" | 10" | | | | | | | End Diaphragms |
| S562 | 18 | 4'-6" | U | | 10" | 2'-10" | 10" | | | | | | | End Diaphragms |
| S563 | 12 | 2'-10" | U | | 10" | 1'-2" | 10" | | | | | | | End Diaphragms |
| S755 | 76 | 5'-4" | L | 2'-8" | 2'-8" | | | | | | | | | Superstructure Ends |

## TYPE - BENDING DIAGRAMS

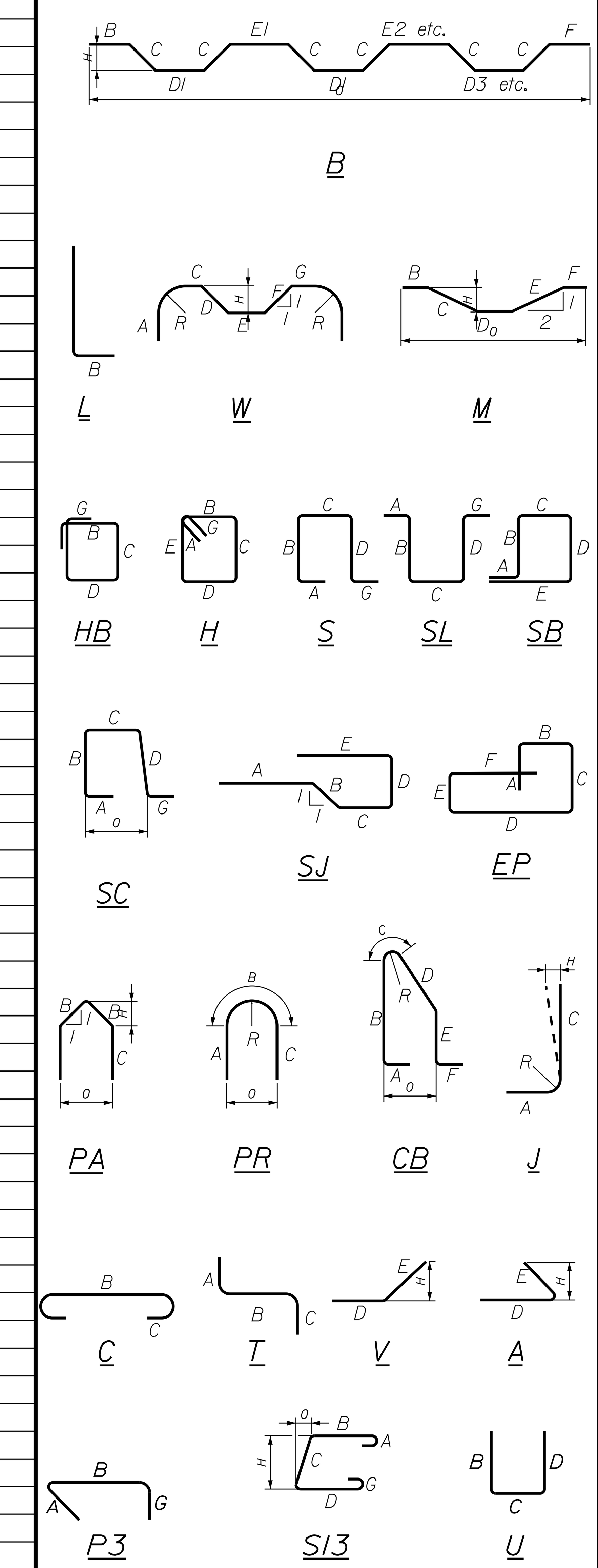


All dimensions are out-to-out of bar.

Bending details and hooks shall conform to the recommendations of the current revision of ACI Standard 315 and ACI Standard 318.

Reinforcing Bar: ASTM A615/A615M, Grade 60 or ASTM A995/A995M, Grade 75.

## GENERAL NOTES

1. The first two digits following the letter(s) of the mark indicate the size ofthe bar:

   Mark "A502" = bar size #5
   Mark "P805" = bar size #8
   Mark "S650" = bar size #6

2. All "S" bars shall be stainless steel. All others shall be plain.

STATE OF MAINE
DEPARTMENT OF TRANSPORTATION

STP-1791(200)

WIN 17912.00

BRIDGE PLANS

BRIDGE NO. 2261

| | BY | DATE |
|---|---|---|
| PROJ. MANAGER | J. STILWELL | |
| DESIGN-DETAILED | RMN | DJB\LSF | DEC 2018 |
| CHECKED-REVIEWED | JGS | SJW | DEC 2018 |
| DESIGN2-DETAILED2 | | |
| DESIGN3-DETAILED3 | | |
| REVISIONS 1 | | |
| REVISIONS 2 | | |
| REVISIONS 3 | | |
| REVISIONS 4 | | |
| FIELD CHANGES | | |

SIGNATURE
P.E. NUMBER
DATE

EDDY FLATS BRIDGE
SACO RIVER OVERFLOW
FRYEBURG OXFORD COUNTY

# REINFORCING STEEL SCHEDULE

SHEET NUMBER
B22
OF B22