STATE OF MAINE
DEPARTMENT OF TRANSPORTATION

SPECIFICATIONS

Design: Load and Resistance Factor Design per AASHTO LRFD Bridge Design Specifications, Fifth Edition 2010 and Interim Specifications through 2010.

DESIGN LOADING

Live Load ..... HL - 93 Modified, Strength I

TRAFFIC DATA

Current (2009) AADT	4900
Future (2029) AADT	5880
DHV - % of AADT	10
Design Hour Volume	588
Heavy Trucks (% of AADT)	13
Heavy Trucks (% of DHV)	11
Directional Distribution (% of DHV)	55
18 kip Equivalent P 2.0	838
18 kip Equivalent P 2.5	798
Design Speed (mph)	25

HYDROLOGIC DATA

Drainage Area	488 sq mi
Design Discharge (Q50)	8561 cfs
Check Discharge (Q100)	9455 cfs
Headwater Elevation (Q50)	204.96 ft
Headwater Elevation (Q100)	205.50 ft
Discharge Velocity (Q50)	3.03 fps
Discharge Velocity (Q100)	3.08 fps
Headwater Elevation (Q1.1)	203.22 ft
Discharge Velocity (Q1.1)	1.30 fps
Headwater Elevation (Q25)	204.45 ft

MATERIALS

Concrete:	
Barriers, Curbs, Sidewalks & Transition Barriers	Class "LP"
Seals	Class "S"
Precast	Class "P"
All Other	Class "A"
Reinforcing Steel	ASTM A 615/A 615M, Grade 60
Prestressing Strands	AASHTO 203 (ASTM A 416), Grade 270, Low Relaxation
Structural Steel:	
All Material (except as noted)	ASTM A 709, Grade 36

BASIC DESIGN STRESSES

Concrete	f 'c = 4,350 psi
Precast Concrete	f 'c = 8,000 psi
	f 'ci = 6,000 psi
Reinforcing Steel	f y = 60,000 psi
Prestressing Strand	F μ = 270,000 psi
Structural Steel:	
ASTM A 709, Grade 36	F y = 36,000 psi

PRINCETON\PASSAMAQUODDY
WASHINGTON COUNTY
PRINCETON BRIDGE
OVER
GRAND FALLS FLOWAGE
ROUTE 1
PROJECT No. AC-BH-1266(200)X
PROJECT LENGTH 0.066 mi.
BRIDGE REPLACEMENT
BRIDGE NO. 2688

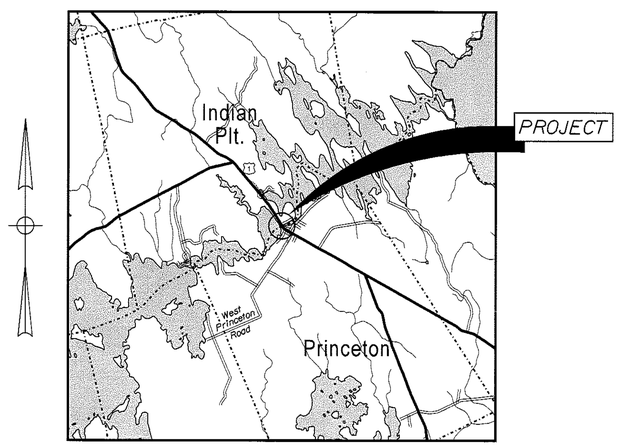

LOCATION MAP

2 0 2 4
Scale of Miles

LIST OF DRAWINGS

Title Sheet	1
Quantities & Notes	2
General Plan	3
Profile	4
Boring Location Plan & Interpretive Subsurface Profile	5
Boring Logs	6,7
Typical Section	8
Highway Approach Cross - Sections	9-16
Abutment Details	17
Abutment No. 1	18-20
Abutment No. 2	21-24
Pier	25,26
Precast Concrete Box Beams	27-29
Superstructure	30
Superstructure Details	31,32
Right of Way Map	33

UTILITIES

Eastern Maine Electic Co-op., Inc.
Indian Township Tribal Government
Time Warner Cable
Northern New England Telephone Operations, LLC.

MAINTENANCE OF TRAFFIC

Traffic shall be maintained over the temporary detour at all times.

PIN 12662.00

AC-BH-1266(200)X

STATE OF MAINE
DEPARTMENT OF TRANSPORTATION
APPROVED
DATE
COMMISSIONER: 3/8/11
CHIEF ENGINEER: 3/8/11

STATE OF MAINE Michael Harry Wight 8089 Licensed PROFESSIONAL ENGINEER

SIGNATURE 8089
P.E. NUMBER
DATE 3/3/2011

PROJECT INFORMATION

PROGRAM	BRIDGE
PROJECT MANAGER	STEPHEN BRIDGE
DESIGNER	BRIAN REEVES
CONSULTANT	ERDMAN & ANTHONY
PROJECT RESIDENT	SUE CHESSA
CONTRACTOR	
PROJECT COMPLETION DATE	

PRINCETON\PASSAMAQUODDY
PRINCETON BRIDGE

TITLE SHEET

SHEET NUMBER
1
OF 33

Filename: \00\BRIDGE\MSTA\001_Title.dgn Division: BRIDGE Username: brian.j.nichols Date: 3/2/2011

ESTIMATED QUANTITIES			
ITEM NO.	DESCRIPTION	QUANTITY	UNIT
201.23	REMOVING SINGLE TREE TOP ONLY	2	EA
201.24	REMOVING STUMP	2	EA
202.19	REMOVING EXISTING BRIDGE (780 CY)	1	LS
203.20	COMMON EXCAVATION	1100	CY
203.24	COMMON BORROW	10	CY
203.25	GRANULAR BORROW	120	CY
206.082	STRUCT. EARTH EXCAV. - MAJOR STRUCTURES	630	CY
206.09	STRUCT. ROCK EXCAV. - ABUT. AND RET. WALLS	20	CY
206.10	STRUCT. EARTH EXCAV. - PIERS	50	CY
206.11	STRUCT. ROCK EXCAV. - PIERS	10	CY
304.13	DENSE GRADED CRUSHED AGGREGATE BASE	1300	CY
403.207	HOT MIX ASPHALT 19.0 MM HMA	180	T
403.208	HOT MIX ASPHALT 12.5 MM HMA SURFACE	15	T
403.209	HOT MIX ASPHALT 9.5 MM HMA (S/W, DRIVES, INCID.)	50	T
403.210	HOT MIX ASPHALT 9.5 MM HMA	360	T
403.213	HOT MIX ASPHALT 12.5 MM BASE	190	T
409.15	BITUMINOUS TACK COAT - APPLIED	170	G
502.219	STRUCT. CONC., ABUT. AND RET. WALLS (250 CY)	1	LS
502.22	STRUCT. CONC., ABUT. AND RET. WALLS (PLACED UNDER WATER)	560	CY
502.239	STRUCT. CONC. PIERS (140 CY)	1	LS
502.249	STRUCT. CONC. PIERS (PLACED UNDER WATER)	160	CY
502.25	STRUCT. CONC. SUPERSTRUCTURE SLABS (80 CY)	1	LS
502.31	STRUCT. CONC. APPROACH SLABS (25 CY)	1	LS
502.49	STRUCT. CONC. CURBS AND SIDEWALK (90 CY)	1	LS
503.12	REINFORCING STEEL, FABRICATED AND DELIVERED	36600	LB
503.13	REINFORCING STEEL, PLACING	36600	LB
504.709	STEEL BRIDGE HARDWARE (220 LB)	1	LS
507.0831	STEEL BRIDGE RAILING, 4 BAR (310 LF)	1	LS
508.14	HIGH PERFORMANCE WATERPROOFING MEMBRANE (500 SY)	1	LS
510.12	SPEC. DET. ROAD 14' WIDTH- VEHIC. & PED. TRAFF. SEPR.	1	LS
511.07	COFFERDAM: ABUTMENT NO. 1	1	LS
511.07	COFFERDAM: PIER	1	LS
511.07	COFFERDAM: ABUTMENT NO. 2	1	LS
512.081	FRENCH DRAINS (160 LF)	1	LS
514.06	CURING BOX FOR CONCRETE CYLINDERS	1	EA
515.20	PROTECTIVE COATING FOR CONCRETE SURFACES	420	SY
520.232	EXPANSION DEVICE - ASPHALTIC PLUG JOINT	90	LF
526.301	TEMPORARY CONCRETE BARRIER TYPE 1 (200 LF)	1	LS
526.34	PERMANENT CONCRETE TRANSITION BARRIER	4	EA
535.62	PRESTRESSED STR CONC BOX BEAM (350 CY)	1	LS
604.165	CATCH BASIN RESET TOP	1	EA
606.1721	BRIDGE TRANSITION - TYPE 1	4	EA
606.23	GUARDRAIL TYPE 3C - SINGLE RAIL	100	LF
606.231	GUARDRAIL TYPE 3C - 15 FOOT RADIUS AND LESS	25	LF
606.265	TERMINAL END - SINGLE RAIL - GALVANIZED STEEL	1	EA
606.353	REFLECTORIZED FLEXIBLE GUARDRAIL MARKER	6	EA
606.365	GUARDRAIL REMOVE, MODIFY, AND RESET TYPR 3B TO 3C	175	LF
606.79	GUARDRAIL 350 FLARED TERMINAL	2	EA
609.11	VERTICAL CURB TYPE 1	180	LF
609.13	VERTICAL BRIDGE CURB TYPE 1	276	LF
609.237	TERMINAL CURB TYPE 1 - 7 FOOT	6	EA
610.08	PLAIN RIPRAP	600	CY
613.319	EROSION CONTROL BLANKET	150	SY
615.07	LOAM	30	CY
618.1401	SEEDING METHOD NUMBER 2 - PLAN QUANTITY	5	UN
619.1201	MULCH - PLAN QUANTITY	5	UN
619.1401	EROSION CONTROL MIX	60	CY
620.58	EROSION CONTROL GEOTEXTILE	810	SY
620.6012	HDPE GEOMEMBRANE	40	SY
627.733	4 INCH WHITE OR YELLOW PAINTED PAVE MRK LINE	1700	LF
627.75	WHITE OR YELLOW PAVEMENT AND CURB MARKING	240	SF
629.05	HAND LABOR, STRAIGHT TIME	40	HR
631.12	ALL PURPOSE EXCAVATOR (INCLUDING OPERATOR)	20	HR
631.15	ROLLER, EARTH AND BASE COURSE (INC. OPERATOR)	20	HR
631.172	TRUCK - LARGE (INCLUDING OPERATOR)	20	HR
639.19	FIELD OFFICE TYPE B	1	EA
643.72	TEMPORARY TRAFFIC SIGNAL	1	LS
652.31	TYPE 1 BARRICADE	10	EA
652.312	TYPE III BARRICADE	4	EA
652.33	DRUM	10	EA
652.34	CONE	20	EA
652.35	CONSTRUCTION SIGNS	500	SF
652.361	MAINTENANCE OF TRAFFIC CONTROL DEVICES (250 CD)	1	LS
652.38	FLAGGER	100	HR
653.22	2" POLY PLASTIC INSULATION	40	SY
656.75	TEMPORARY SOIL EROSION AND WATER POLLUTION CONTROL	1	LS
659.10	MOBILIZATION	1	LS

GENERAL CONSTRUCTION NOTES

1. For easements, construction limits and right of way lines, refer to Right of Way Map.

2. The clearing limits as shown on the plans are approximate. The exact limits will be established in the field by the Resident. Payment for clearing will be considered incidental to Contract items.

3. All utility facilities shall be adjusted by the respective utilities unless otherwise noted.

4. Do not excavate for Aggregate Subbase Course where existing material is suitable as determined by the Resident.

5. In areas where the Resident directs the Contractor not to excavate to the subgrade line shown on the plans, payment for removing existing pavement, grubbing, shaping, ditching, and compacting the existing subbase and layers of new subbase 6 inches or less thick will be made under appropriate equipment rental items.

6. All embankment material, except as otherwise shown, placed below EL. 204.96 shall be Granular Borrow meeting the requirements of Subsection 703.19, Material for Underwater Backfill.

7. Place loam 2 inches deep on all new or reconstructed sideslopes or as directed by the Resident.

8. Erosion Control Mix may be substituted in those areas normally receiving loam and seed as directed by the Resident. Placement shall be in accordance with Standard Specifications Section 619, Mulch. Payment will be made under Item No. 619.1401, Erosion Control Mix.

9. Place a 24-in. wide strip of Temporary Erosion Control Blanket on the sideslopes along the top of the riprap and behind the wingwalls.

10. An NCHRP350 compliant guardrail end treatment shall be installed concurrently with the placement of each section of beam guardrail.

11. Extended-use Erosion Control Blanket, seeded gutters, riprap downspouts, and other gutters lined with Stone Ditch Protection shall be constructed after paving and shoulder work is completed, where it is apparent that runoff will cause continual erosion. Payment will be made under the appropriate Contract items.

12. Protective Coating for Concrete Surfaces shall be applied to the following areas:

All exposed surfaces of concrete curbs and sidewalks.
Fascias down to the drip notch.
All exposed surfaces of Concrete Transition Barriers.
All exposed surfaces of Abutment Return Wings to 12" below finish grade on face of return wings.

13. Project information referred to below may be accessed at the following MaineDOT web address: http://www.maine.gov/mdot/comprehensive-list-projects/project-information.php.

14. The existing bridge plans may be accessed at the MaineDOT web address. The plans are reproductions of the original drawings as prepared for the construction of the bridge. It is very unlikely that the plans will show any construction field changes or any alterations which may have been made to the bridge during its life span.

15. The hydrologic report of the bridge site may be accessed at the MaineDOT web address. The hydrologic report is based on MaineDOT's interpretation of the information obtained for the subject site. No assurance is given that the information or the conclusions of the report will be representative of actual conditions at the time of construction.

16. The project geotechnical report titled: Geotechnical Design Report, Princeton Bridge, Route 1 over Grand Falls Flowage, Princeton, Maine; MaineDOT Soils Report No. 2011-01; dated January 12, 2011, may be accessed at the MaineDOT web address.

17. Geotechnical information furnished or referred to in this plan set is for the use of the Bidders and the Contractor. No assurance is given that the information or interpretations will be representative of actual subsurface conditions at the construction site. MaineDOT will not be responsible for the Bidders' or Contractor's interpretations of, or conclusions drawn from, the geotechnical information. The boring logs contained in the plan set present factual and interpretive subsurface information collected at discrete locations. Data provided may not be representative of the subsurface conditions between the boring locations.

18. Quantities included for pay items measured and paid for by Lump Sum are estimated quantities and are provided by MaineDOT for informational purposes only. Lump Sum pay items will be paid for at the Contract Bid amount, with no addition or reduction in payment to the Contractor if the actual final quantities are different from the MaineDOT provided estimated quantities, except as follows:

a. If a Lump Sum pay item is eliminated, the requirements of Standard Specifications Section 109.2, Elimination of Items, will take precedence.

b. If other Contract Documents specifically allow a change in payment for a Lump Sum pay item, those requirements will be followed.

c. If a design change results in changes to estimated quantities for Lump Sum pay items, price adjustments will be made in accordance with Standard Specifications Section 109.7, Equitable Adjustments to Compensation.

19. The Contractor shall submit a Bridge Demolition Plan to the Resident at least 10 business days prior to the start of demolition work. The plan shall outline the methods and equipment to be used to remove and dispose of all materials included in the existing bridge. No work related to the removal of the bridge shall be undertaken by the Contractor until MaineDOT has reviewed the Bridge Demolition Plan for appropriateness and completeness. Payment for all work necessary for developing, submitting and finalizing the Demolition Plan will be considered incidental to the bridge removal pay item.

22. The existing bridge shall be removed by and become the property of the Contractor. The steel portions of the existing bridge are coated with a lead-based paint system. The Contractor is responsible for the containment, proper management and disposal of all lead-contaminated hazardous waste generated by the process of demolishing the bridge. The Contractor is responsible for implementing appropriate OSHA mandated personal protection standards related to this process. Once the existing bridge is removed, the Contractor is solely responsible for the care, custody and control of the components of the existing bridge and any hazardous waste generated as a result of the storage, recycling or disposal of the bridge components, including lead-coated steel. The Contractor shall recycle or reuse the steel in accordance with the Maine Department of Environmental Protection's "Maine Hazardous Waste Management Regulations," Chapter 850. A copy of this regulation is available at MaineDOT's offices on Child Street in Augusta. Payment for all labor, materials, equipment and other costs required to remove and dispose of the existing bridge will be considered incidental to the bridge removal pay item.

23. All guardrail shall be removed and reset and upgraded to Guardrail-Type 3c. This work shall be paid for under Item No. 606.365, Guardrail Remove, Modify, and Reset Type 3b to 3c. Any Guardrail not in re-useable condition, as determined by the Resident, shall be replaced. Replacement shall be paid for under Item No. 606.23, Guardrail Type 3c.

24. A temporary wall and/or temporary earth support system may be needed from approximately station 17+60, 23 +/- ft left to the backside of Abutment No. 1 to facilitate maintenance of traffic. This work shall be in accordance with and considered incidental to special provision 510.

STATE OF MAINE
DEPARTMENT OF TRANSPORTATION

AC-BH-1266(200)X

PIN 12662.00

BRIDGE NO. 2688

BRIDGE PLANS

PROJ. MANAGER	S. BOOGE	BY	DATE
DESIGN-DETAILED	B. REEVES	B. NICHOLS	FEB 2011
CHECKED-REVIEWED	E. CASWELL	D. SULLIVAN	
DESIGN2-DETAILED2			
DESIGN3-DETAILED3			
REVISIONS 1			
REVISIONS 2			
REVISIONS 3			
REVISIONS 4			
FIELD CHANGES			

SIGNATURE

P.E. NUMBER

DATE

PRINCETON BRIDGE
GRAND FALLS FLOWAGE
PRINCETON\PASSAMAQUODDY WASHINGTON COUNTY

ESTIMATED QUANTITIES

SHEET NUMBER
2
OF 33

Filename: ...\BRIDGE\MSTA\002_Estimate.dgn Division: BRIDGE Username: brian.j.nichols Date:3/7/2011

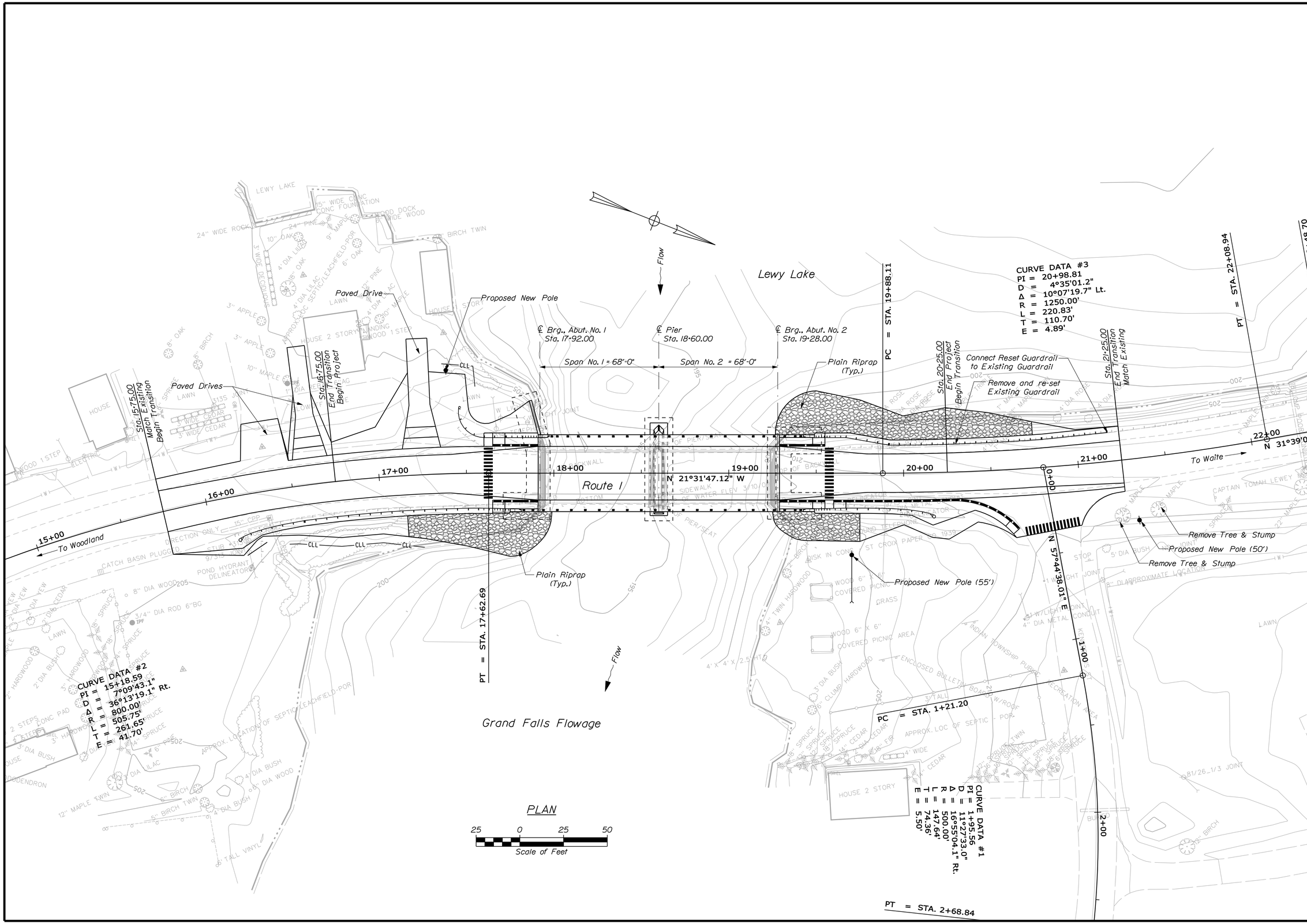

STATE OF MAINE
DEPARTMENT OF TRANSPORTATION

AC-BH-1266(200)X

PIN 12662.00

BRIDGE NO. 2888

BRIDGE PLANS

	BY	DATE
PROJ. MANAGER	S. BOOSE	
DESIGN-DETAILED	B. REEVES	B. NICHOLS	FEB 2011
CHECKED-REVIEWED	E. CASWELL	D. SULLIVAN	------
DESIGN2-DETAILED2	------	------	------
DESIGN3-DETAILED3	------	------	------
REVISIONS 1	------	------	------
REVISIONS 2	------	------	------
REVISIONS 3	------	------	------
REVISIONS 4	------	------	------
FIELD CHANGES	------	------	------

SIGNATURE

P.E. NUMBER

DATE

PRINCETON BRIDGE
GRAND FALLS FLOWAGE
PRINCETON\PASSAMAQUODDY WASHINGTON COUNTY

GENERAL PLAN

SHEET NUMBER

3

OF 33

Filename: ...\00\bridge\msta\003_BDPlan1.dgn Division: BRIDGE Username: brian.j.nichols Date:3/7/2011

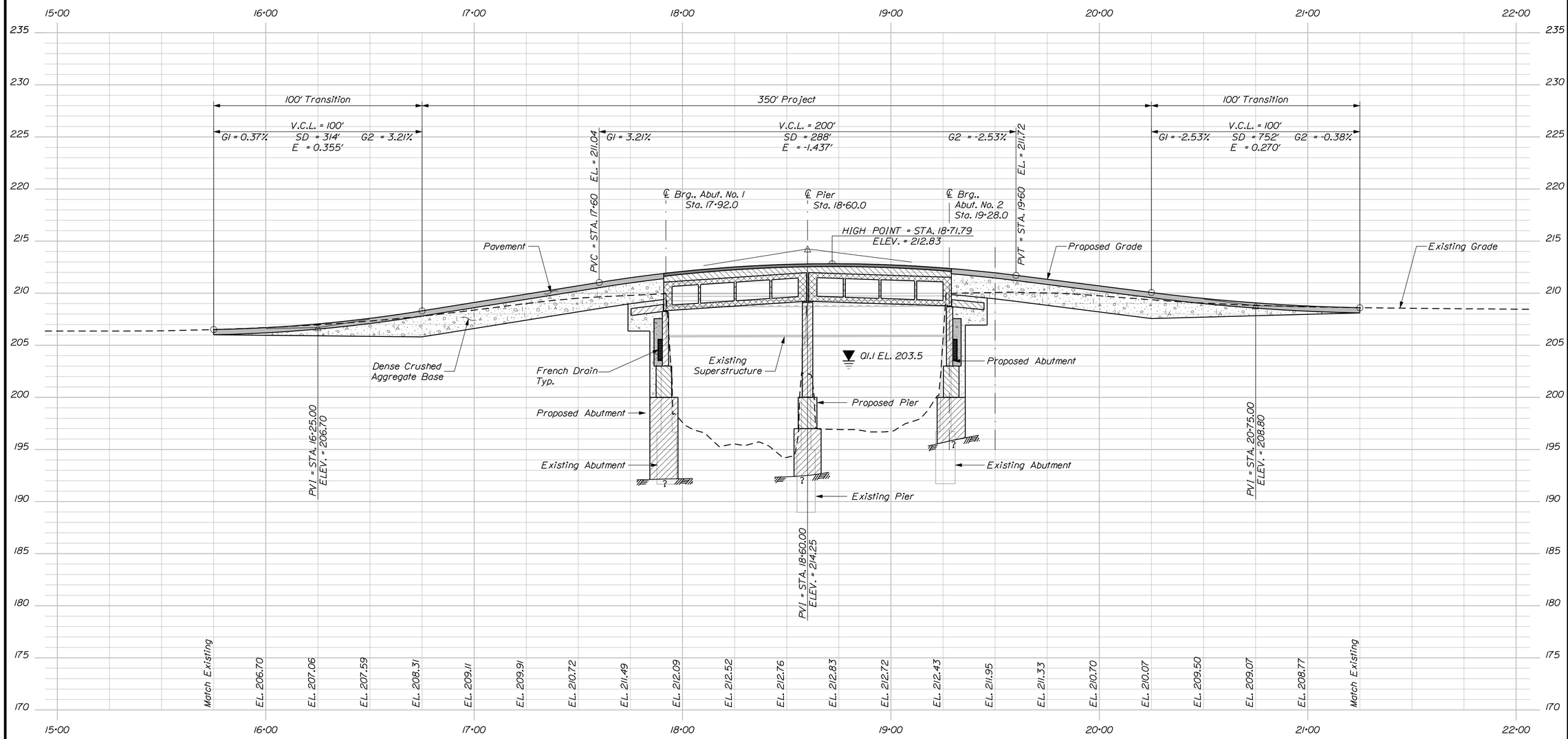

PROFILE

STATE OF MAINE
DEPARTMENT OF TRANSPORTATION

AC-BH-1266(200)X

PIN 12662.00

BRIDGE NO. 2888

BRIDGE PLANS

	BY	DATE
PROJ. MANAGER	S. BODGE	
DESIGN-DETAILED	B. REEVES	B. NICHOLS	FEB 2011
CHECKED-REVIEWED	E. CASWELL	D. SULLIVAN	------
DESIGN2-DETAILED2	------	------	------
DESIGN3-DETAILED3	------	------	------
REVISIONS 1	------	------	------
REVISIONS 2	------	------	------
REVISIONS 3	------	------	------
REVISIONS 4	------	------	------
FIELD CHANGES	------	------	------

SIGNATURE

P.E. NUMBER

DATE

PRINCETON BRIDGE
GRAND FALLS FLOWAGE
PRINCETON\PASSAMAQUODDY WASHINGTON COUNTY

PROFILE

SHEET NUMBER

4

OF 33

Filename: ...\00\bridge\msta\004_Profile.dgn Division: BRIDGE Username: brian.j.nichols Date:3/7/2011

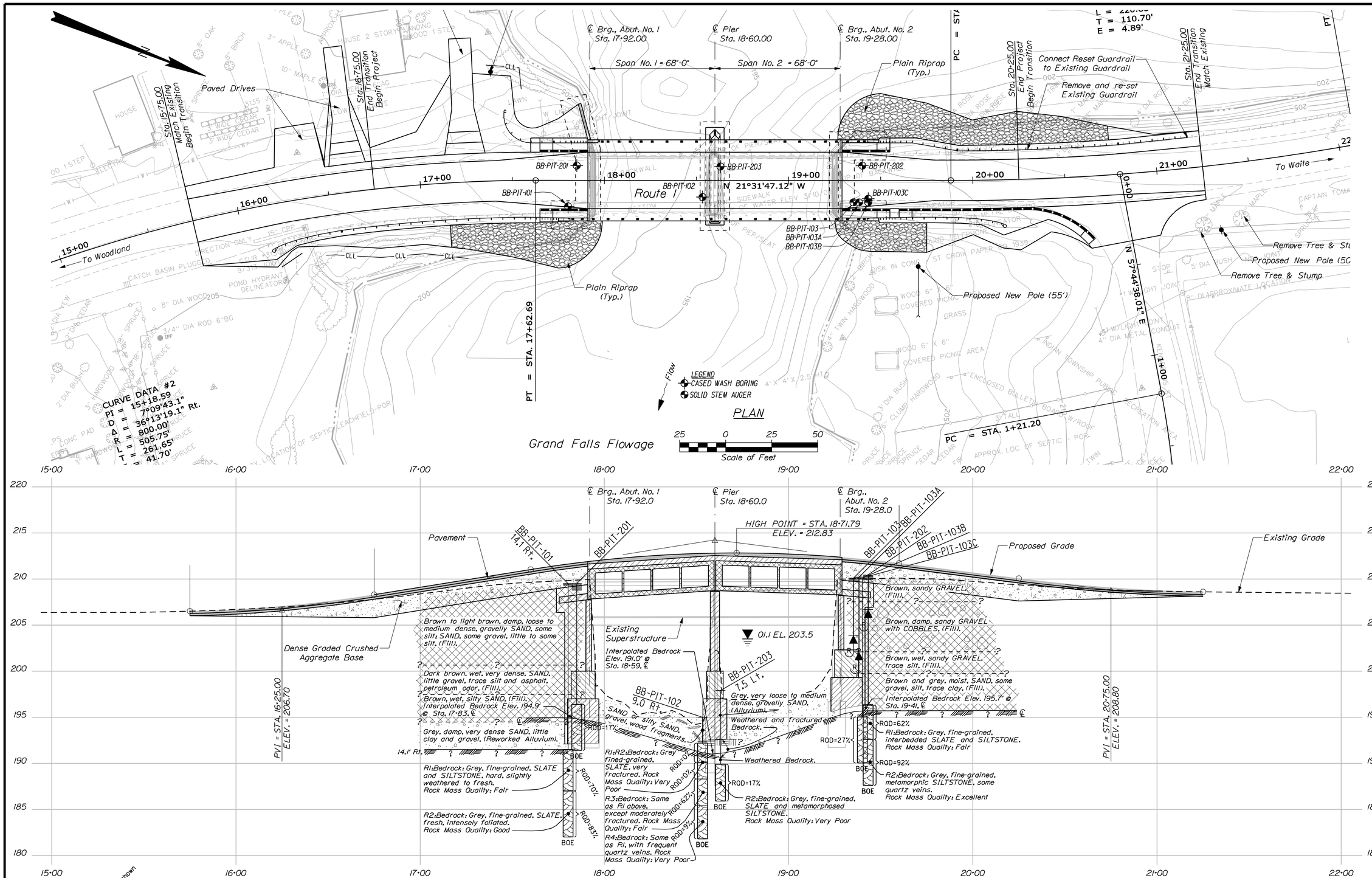

Notes: 1. This generalized interpretive soil profile is intended to convey trends in subsurface conditions. The boundaries between strata are approximate and idealized, and have been developed by interpretations of widely spaced explorations and samples. Actual soil transitions may vary and are probably more erratic. For more specific information refer to the exploration logs.

2. Soil and bedrock statigraphy illustrated only at BB-PIT-101, BB-PIT-102, BB-PIT-203 and BB-PIT-103C for clarity. Refer to Boring Log Sheets for specific subsurface conditions encountered at all borings.

STATE OF MAINE
DEPARTMENT OF TRANSPORTATION

AC-BH-1266(200)X

PIN 12662.00

BRIDGE NO. 2688

BRIDGE PLANS

PROJ. MANAGER	D. ANDERSON	BY	DATE
DESIGN-DETAILED	L. KRUSINSKI	T. WHITE	
CHECKED-REVIEWED			
DESIGN2-DETAILED2			
DESIGN3-DETAILED3			
REVISIONS 1			
REVISIONS 2			
REVISIONS 3			
REVISIONS 4			
FIELD CHANGES			

SIGNATURE

P.E. NUMBER

DATE

PRINCETON BRIDGE
GRAND FALLS FLOWAGE
PRINCETON WASHINGTON COUNTY

BORING LOCATION PLAN & INTERPRETIVE SUBSURFACE PROFILE

SHEET NUMBER

5

OF 33

Filename: ...\GEOTECH\MSTA\005_BLP&ISP1.dgn Division: BRIDGE Username: brian.j.nichols Date:3/7/2011

Filename: ...\MSTA\006_BORING LOGS1.dgn   Division: BRIDGE   Username: brian.j.nichols   Date:3/7/2011

Maine Department of Transportation — Soil/Rock Exploration Log — US CUSTOMARY UNITS

Project: Princeton Bridge #2688 over Grand Falls Flowage
Location: Princeton, Maine

Boring No.: BB-PIT-101   PIN: 12662.00

Driller:	Maine Testboring, Inc.	Elevation (ft.)	209.5	Auger ID/OD:	5" SSA
Operator:	B. Enos/C. Wormley	Datum:	NAVD 88	Sampler:	Standard Split Spoon
Logged By:	G. Lidstone	Rig Type:	Mobile B-47 Trailer	Hammer Wt./Fall:	140#/30"
Date Start/Finish:	10/13/04-10/13/04	Drilling Method:	Cased Wash Boring	Core Barrel:	NQ-2"
Boring Location:	17+80.3, 14.1 ft Rt.	Casing ID/OD:	HW	Water Level*:	9.0 ft bgs

Definitions:
D = Split Spoon Sample
MD = Unsuccessful Split Spoon Sample attempt
U = Thin Wall Tube Sample
R = Rock Core Sample
V = Insitu Vane Shear Test
SSA = Solid Stem Auger

Definitions:
S_u = Insitu Field Vane Shear Strength (psf)
T_v = Pocket Torvane Shear Strength (psf)
q_p = Unconfined Compressive Strength (ksf)
$S_{u(lab)}$ = Lab Vane Shear Strength (psf)
WOH = weight of 140lb. hammer
WOR = weight of rods WOC = weight of casing

Definitions:
WC = water content, percent
LL = Liquid Limit
PL = Plastic Limit
PI = Plasticity Index
G = Grain Size Analysis
C = Consolidation Test

Sample Information

Depth (ft.)	Sample No.	Pen./Rec. (in.)	Sample Depth (ft.)	Blows (/6 in.) Shear Strength (psf) or RQD (%)	N-value	Casing Blows	Elevation (ft.)	Graphic Log	Visual Description and Remarks	Laboratory Testing Results/ AASHTO and Unified Class
0						SSA	209.35		PAVEMENT. —0.15	
5	1D	24/7	5.00 - 7.00	25/24/24/21	48				Brown, damp, dense, SAND, some gravel, little silt, (Fill).	G#182506 A-1-b, SM WC=5.1%
9							200.50		—9.00 Dark brown, wet, medium to coarse SAND, little gravel, trace silt, old pavement, (Fill). [Strong Petroleum Odor].	
10	2D	16/12	10.00 - 11.33	54/87/75(4")	---	143				
11						114				
12						26			Brown, wet, silty fine to coarse SAND.	
13						21				
14						47				
15	3D	24/13	15.00 - 17.00	32/44/43/33	87	71	194.50		—15.00 Grey, damp, very dense, SAND, some silt, little clay, little gravel, (Reworked Till).	G#182505 A-4, CL-ML WC=19.3%
16						77			a100 blows for 0.4'.	
17.4						a100	192.10		—17.40 Top of Bedrock at Elev. 192.1'. Washed ahead to 18.0' bgs.	
18	R1	54/52	18.00 - 22.50	RQD = 70%		NQ			R1:Bedrock: Grey, fine grained, SLATE and SILTSTONE, hard, slightly weathered to fresh, joint set along beddirng at steep to vertical angles, unweathered surfaces. Flume Ridge Formation. Rock Mass Quality: Fair. R1:Core Times (min:sec) 18.0-19.0' (2:30) 19.0-20.0' (2:40) 20.0-21.0' (2:45) 21.0-22.0' (2:38) 22.0-22.5' (1:50) 96% Recovery	
22.5	R2	60/60	22.50 - 27.50	RQD = 83%					R2: Bedrock: Grey, fine-grained, SLATE, fresh, intensely foliated. Joint sets along foliation/bedding and horizontal. Flume Ridge Formation. Rock Mass Quality: Good. R2:Core Times (min:sec) 22.5-23.5' (2:52) 23.5-24.5' (3:05) 24.5-25.5' (3:11) 25.5-26.5' (3:08) 26.5-27.5' (3:15) 100% Recovery	
27.5							182.00		—27.50 Bottom of Exploration at 27.50 feet below ground surface.	
30										
35										
40										
45										
50										

Remarks:

Existing bridge deck elevation at Abutment 1.
Boring locations painnted on pavement for possible future survey.

Stratification lines represent approximate boundaries between soil types; transitions may be gradual.

* Water level readings have been made at times and under conditions stated. Groundwater fluctuations may occur due to conditions other than those present at the time measurements were made.

Page 1 of 1   Boring No.: BB-PIT-101

Maine Department of Transportation — Soil/Rock Exploration Log — US CUSTOMARY UNITS

Project: Princeton Bridge #2688 over Grand Falls Flowage
Location: Princeton, Maine

Boring No.: BB-PIT-102   PIN: 12662.00

Driller:	Maine Testboring, Inc.	Elevation (ft.)	195.0	Auger ID/OD:	N/A
Operator:	B. Enos/C. Wormley	Datum:	NAVD 88	Sampler:	Standard Split Spoon
Logged By:	G. Lidstone	Rig Type:	Mobile B-47 Trailer	Hammer Wt./Fall:	140#/30"
Date Start/Finish:	10/14/04-10/14/04	Drilling Method:	Cased Wash Boring	Core Barrel:	NQ-2"
Boring Location:	18+53.3, 9.0 ft Rt.	Casing ID/OD:	NW	Water Level*:	At ground surface

Definitions:
D = Split Spoon Sample
MD = Unsuccessful Split Spoon Sample attempt
U = Thin Wall Tube Sample
R = Rock Core Sample
V = Insitu Vane Shear Test
SSA = Solid Stem Auger
Definitions:
S_u = Insitu Field Vane Shear Strength (psf)
T_v = Pocket Torvane Shear Strength (psf)
q_p = Unconfined Compressive Strength (ksf)
$S_{u(lab)}$ = Lab Vane Shear Strength (psf)
WOH = weight of 140lb. hammer
WOR = weight of rods WOC = weight of casing
Definitions:
WC = water content, percent
LL = Liquid Limit
PL = Plastic Limit
PI = Plasticity Index
G = Grain Size Analysis
C = Consolidation Test

Depth (ft.)	Sample No.	Pen./Rec. (in.)	Sample Depth (ft.)	Blows (/6 in.) Shear Strength (psf) or RQD (%)	N-value	Casing Blows	Elevation (ft.)	Visual Description and Remarks	Laboratory Testing Results/ AASHTO and Unified Class
0	1D/AB	24/4	0.00 - 2.00	24/41/32/13	73	22		(1D/A) 0.0-1.5' bgs. Brown, wet, fine to coarse SAND, wood, rock fragments, trace gravel. Density probably loose due to higher blow counts caused by wood.	
1						33	193.50	—1.50 (1D/B) 1.5-2.0' bgs. Brown, wet, silty fine to coarse SAND, trace gravel. a35 blows for 0.6'.	
2.8	R1	25.2/ 21.8	2.80 - 4.90	RQD = 0%		a35 NQ	192.40	—2.60 Top of Bedrock at Elev. 192.4'. Roller coned ahead from 2.6-2.8' bgs. R1:Bedrock: Grey, fine grained, SLATE, hard, slightly weathered, very fractured along steeply dipping bedding, surfaces fresh with no residue. Flume Ridge Formation. Rock Mass Quality: Very poor. R1:Core Times (min:sec) 2.8-3.8' (3:17) 3.8-4.8' (2:55) 4.8-4.9' (0:45) 87% Recovery	
4.9	R2	21.6/ 21.6	4.90 - 6.70	RQD = 0%				R2:Bedrock: Same as R1, except highly fractured. Rock Mass Quality: Very Poor. R2:Core Times (min:sec) 4.9-5.9' (2:50) 5.9-6.7' (2:38) 100% Recovery	
6.7	R3	34.8/31	6.70 - 9.60	RQD = 62%				R3:Bedrock: Same as R1, except moderately fractured. Rock Mass Quality: Fair. R3:Core Times (min:sec) 6.7-7.7' (2:03) 7.7-8.7' (3:11) 8.7-9.6' (3:05) 91% Recovery	
9.6	R4	43.2/42	9.60 - 13.20	RQD = 9%				R4:Bedrock: Same as R1, with frequent quartz veins. Rock Mass Quality: Very Poor. R4:Core Times (min:sec) 9.6-10.6' (2:35) 10.6-11.6' (2:50) 11.6-12.6' (3:20) 12.6-13.2' (2:10) 98% Recovery	
13.2							181.80	—13.20 Bottom of Exploration at 13.20 feet below ground surface.	
15									
20									
25									

Remarks:

Concrete Deck 0.85' thick.
Top of Deck to water 8.7'.
Top of Deck to ground surface 16.4'.

Stratification lines represent approximate boundaries between soil types; transitions may be gradual.
* Water level readings have been made at times and under conditions stated. Groundwater fluctuations may occur due to conditions other than those present at the time measurements were made.

Page 1 of 1   Boring No.: BB-PIT-102

Maine Department of Transportation — Soil/Rock Exploration Log — US CUSTOMARY UNITS

Project: Princeton Bridge #2688 over Grand Falls Flowage
Location: Princeton, Maine

Boring No.: BB-PIT-103   PIN: 12662.00

Driller:	Maine Testboring, Inc.	Elevation (ft.)	210.1	Auger ID/OD:	5"
Operator:	B. Enos/C. Wormley	Datum:	NAVD 88	Sampler:	Standard Split Spoon
Logged By:	G. Lidstone	Rig Type:	Mobile B-47 Trailer	Hammer Wt./Fall:	140#/30"
Date Start/Finish:	10/13/04-10/13/04	Drilling Method:	Solid Stem Auger	Core Barrel:	N/A
Boring Location:	19+35.2, 12.0 ft Rt.	Casing ID/OD:	N/A	Water Level*:	None Observed

Definitions: D = Split Spoon Sample; MD = Unsuccessful Split Spoon Sample attempt; U = Thin Wall Tube Sample; R = Rock Core Sample; V = Insitu Vane Shear Test; SSA = Solid Stem Auger; S_u = Insitu Field Vane Shear Strength (psf); T_v = Pocket Torvane Shear Strength (psf); q_p = Unconfined Compressive Strength (ksf); $S_{u(lab)}$ = Lab Vane Shear Strength (psf); WOH = weight of 140lb. hammer; WOR = weight of rods WOC = weight of casing; WC = water content, percent; LL = Liquid Limit; PL = Plastic Limit; PI = Plasticity Index; G = Grain Size Analysis; C = Consolidation Test

Depth (ft.)	Sample No.	Pen./Rec. (in.)	Sample Depth (ft.)	Blows (/6 in.) Shear Strength (psf) or RQD (%)	N-value	Casing Blows	Elevation (ft.)	Visual Description and Remarks	Laboratory Testing Results/ AASHTO and Unified Class
0						SSA	209.75	PAVEMENT. —0.35 Brown, damp, sandy GRAVEL, trace silt, (Fill).	
2.5							207.60	—2.50 Similar to above, but with cobbles, (Fill).	
5	1D	14.4/4	5.00 - 6.20	11/19/50(2.4")	---				
6.2							203.90	—6.20 Bottom of Exploration at 6.20 feet below ground surface. AUGER REFUSAL	
10									
15									
20									
25									

Remarks:

1. Existing Bridge Deck elevation at Abutment 2.

2. Soil Descriptions based on visual observations and drill attitude.

Stratification lines represent approximate boundaries between soil types; transitions may be gradual.
* Water level readings have been made at times and under conditions stated. Groundwater fluctuations may occur due to conditions other than those present at the time measurements were made.

Page 1 of 1   Boring No.: BB-PIT-103

Maine Department of Transportation — Soil/Rock Exploration Log — US CUSTOMARY UNITS

Project: Princeton Bridge #2688 over Grand Falls Flowage
Location: Princeton, Maine

Boring No.: BB-PIT-103A   PIN: 12662.00

Driller:	Maine Testboring, Inc.	Elevation (ft.)	210.2	Auger ID/OD:	5"
Operator:	B. Enos/C. Wormley	Datum:	NAVD 88	Sampler:	N/A
Logged By:	G. Lidstone	Rig Type:	Mobile B-47 Trailer	Hammer Wt./Fall:	N/A
Date Start/Finish:	10/13/04-10/13/04	Drilling Method:	Solid Stem Auger	Core Barrel:	N/A
Boring Location:	19+38.2, 12.0 ft Rt.	Casing ID/OD:	N/A	Water Level*:	None Observed

Definitions: D = Split Spoon Sample; MD = Unsuccessful Split Spoon Sample attempt; U = Thin Wall Tube Sample; R = Rock Core Sample; V = Insitu Vane Shear Test; SSA = Solid Stem Auger; S_u = Insitu Field Vane Shear Strength (psf); T_v = Pocket Torvane Shear Strength (psf); q_p = Unconfined Compressive Strength (ksf); $S_{u(lab)}$ = Lab Vane Shear Strength (psf); WOH = weight of 140lb. hammer; WOR = weight of rods WOC = weight of casing; WC = water content, percent; LL = Liquid Limit; PL = Plastic Limit; PI = Plasticity Index; G = Grain Size Analysis; C = Consolidation Test

Depth (ft.)	Sample No.	Pen./Rec. (in.)	Sample Depth (ft.)	Blows (/6 in.) Shear Strength (psf) or RQD (%)	N-value	Casing Blows	Elevation (ft.)	Visual Description and Remarks	Laboratory Testing Results/ AASHTO and Unified Class
0						SSA	209.85	PAVEMENT. —0.35 Brown, damp, sandy GRAVEL, trace silt, (Fill).	
2.5							207.70	—2.50 Similar to above, but with cobbles, (Fill).	
8.1							202.10	—8.10 Bottom of Exploration at 8.10 feet below ground surface. REFUSAL on Boulder	
10									
15									
20									
25									

Remarks:

1. xisting Bridge Deck elevation at Abutment 2.
2. Soil descriptions based on visual observations and drill attitude.

Stratification lines represent approximate boundaries between soil types; transitions may be gradual.
* Water level readings have been made at times and under conditions stated. Groundwater fluctuations may occur due to conditions other than those present at the time measurements were made.

Page 1 of 1   Boring No.: BB-PIT-103A

Maine Department of Transportation — Soil/Rock Exploration Log — US CUSTOMARY UNITS

Project: Princeton Bridge #2688 over Grand Falls Flowage
Location: Princeton, Maine

Boring No.: BB-PIT-103B   PIN: 12662.00

Driller:	Maine Testboring, Inc.	Elevation (ft.)	210.4	Auger ID/OD:	5"
Operator:	B. Enos/C. Wormley	Datum:	NAVD 88	Sampler:	N/A
Logged By:	G. Lidstone	Rig Type:	Mobile B-47 Trailer	Hammer Wt./Fall:	N/A
Date Start/Finish:	10/13/04-10/13/04	Drilling Method:	Solid Stem Auger	Core Barrel:	N/A
Boring Location:	19+43.2, 12.0 ft Rt.	Casing ID/OD:	N/A	Water Level*:	None Observed

Definitions: D = Split Spoon Sample; MD = Unsuccessful Split Spoon Sample attempt; U = Thin Wall Tube Sample; R = Rock Core Sample; V = Insitu Vane Shear Test; SSA = Solid Stem Auger; S_u = Insitu Field Vane Shear Strength (psf); T_v = Pocket Torvane Shear Strength (psf); q_p = Unconfined Compressive Strength (ksf); $S_{u(lab)}$ = Lab Vane Shear Strength (psf); WOH = weight of 140lb. hammer; WOR = weight of rods WOC = weight of casing; WC = water content, percent; LL = Liquid Limit; PL = Plastic Limit; PI = Plasticity Index; G = Grain Size Analysis; C = Consolidation Test

Depth (ft.)	Sample No.	Pen./Rec. (in.)	Sample Depth (ft.)	Blows (/6 in.) Shear Strength (psf) or RQD (%)	N-value	Casing Blows	Elevation (ft.)	Visual Description and Remarks	Laboratory Testing Results/ AASHTO and Unified Class
0						SSA	210.05	PAVEMENT. —0.35 Brown, damp, sandy GRAVEL, trace silt, (Fill).	
1.5							208.90	—1.50 Similar to above, but with cobbles, (Fill).	
3.7							206.70	—3.70 Bottom of Exploration at 3.70 feet below ground surface. REFUSAL on Boulder	
5									
10									
15									
20									
25									

Remarks:

1. Existing Bridge Deck elevation at Abutment 2.

2. Soil descriptions based on visual observations and drill attitude.

Stratification lines represent approximate boundaries between soil types; transitions may be gradual.
* Water level readings have been made at times and under conditions stated. Groundwater fluctuations may occur due to conditions other than those present at the time measurements were made.

Page 1 of 1   Boring No.: BB-PIT-103B

Maine Department of Transportation — Soil/Rock Exploration Log — US CUSTOMARY UNITS

Project: Princeton Bridge #2688 over Grand Falls Flowage
Location: Princeton, Maine

Boring No.: BB-PIT-103C   PIN: 12662.00

Driller:	Maine Testboring, Inc.	Elevation (ft.)	210.3	Auger ID/OD:	5"
Operator:	B. Enos/C. Wormley	Datum:	NAVD 88	Sampler:	Standard Split Spoon
Logged By:	G. Lidstone	Rig Type:	Mobile B-47 Trailer	Hammer Wt./Fall:	140#/30"
Date Start/Finish:	10/13/04-10/14/04	Drilling Method:	Cased Wash Boring	Core Barrel:	NQ-2"
Boring Location:	19+43.2, 10.0 ft Rt.	Casing ID/OD:	HW	Water Level*:	8.0 ft bgs

Definitions: D = Split Spoon Sample; MD = Unsuccessful Split Spoon Sample attempt; U = Thin Wall Tube Sample; R = Rock Core Sample; V = Insitu Vane Shear Test; SSA = Solid Stem Auger; S_u = Insitu Field Vane Shear Strength (psf); T_v = Pocket Torvane Shear Strength (psf); q_p = Unconfined Compressive Strength (ksf); $S_{u(lab)}$ = Lab Vane Shear Strength (psf); WOH = weight of 140lb. hammer; WOR = weight of rods WOC = weight of casing; WC = water content, percent; LL = Liquid Limit; PL = Plastic Limit; PI = Plasticity Index; G = Grain Size Analysis; C = Consolidation Test

Depth (ft.)	Sample No.	Pen./Rec. (in.)	Sample Depth (ft.)	Blows (/6 in.) Shear Strength (psf) or RQD (%)	N-value	Casing Blows	Elevation (ft.)	Visual Description and Remarks	Laboratory Testing Results/ AASHTO and Unified Class
0						SSA	209.95	PAVEMENT. —0.35 Brown, damp, sandy GRAVEL, trace silt, (Fill).	
2.4							207.90	—2.40 Similar to above, but with cobbles, (Fill).	
8							202.30	—8.00 Brown, wet, sandy GRAVEL, trace silt, (Fill).	
10	1D/AB	24/13	10.00 - 12.00	28/67/26/43	93	68		(1D/A) 10.0-11.0' bgs.	
11						90	199.30	—11.00 (1D/B) 11.0-12.0' bgs. Brown and grey, moist, SAND, some gravel, some silt, trace clay, (Reworked Till).	G#182507 A-2-4, SC-SM WC=31.3%
12						130		a200 blows for 0.9'.	
13						a200	196.40	—13.90 Top of Bedrock at Elev. 196.4'. Roller coned ahead fron 13.9-14.0' bgs.	
14	R1	44.4/43	14.00 - 17.70	RQD = 62%		NQ	196.30	—14.00 R1:Bedrock: Grey, fine grained, interbedded metamorphic SILTSTONE and SLATE, moderately hard to hard, slightly weathered in the upper 16 inches to fresh, highly foliated. Flume Ridge Formation. Rock Mass Quality: Fair. R1: Core Times (min:sec) 14.0-15.0' (3:05) 15.0-16.0' (2:38) 16.0-17.0' (2:30) 17.0-17.7' (2:18) 96% Recovery	
17.7	R2	60/56	17.70 - 22.70	RQD = 92%				R2:Bedrock: Grey, fine-grained, Metamorphic SILTSTONE, fresh, some quartz veins. Flume Ridge Formation. Rock Mass Quality: Excellent R2:Core Times (min:sec) 17.7-18.7' (2:15) 18.7-19.7' (2:32) 19.7-20.7' (2:40) 20.7-21.7' (2:55) 21.7-22.7' (3:07) 93% Recovery	
22.7							187.60	—22.70 Bottom of Exploration at 22.70 feet below ground surface.	
25									

Remarks:

Existing Bridge Deck elevation at Abutment 2.

Stratification lines represent approximate boundaries between soil types; transitions may be gradual.
* Water level readings have been made at times and under conditions stated. Groundwater fluctuations may occur due to conditions other than those present at the time measurements were made.

Page 1 of 1   Boring No.: BB-PIT-103C

STATE OF MAINE
DEPARTMENT OF TRANSPORTATION

AC-BH-1266(200)X

BRIDGE PLANS

PIN 12662.00

BRIDGE NO. 2688

		BY	DATE
PROJ. MANAGER	D. ANDERSON		
DESIGN-DETAILED	L. KRUSINSKI	T. WHITE	
CHECKED-REVIEWED			
DESIGN2-DETAILED2			
DESIGN3-DETAILED3			
REVISIONS 1			
REVISIONS 2			
REVISIONS 3			
REVISIONS 4			
FIELD CHANGES			

SIGNATURE

P.E. NUMBER

DATE

PRINCETON BRIDGE
GRAND FALLS FLOWAGE
PRINCETON   WASHINGTON COUNTY

BORING LOGS

SHEET NUMBER
6
OF 33

Filename: ...\MSTA\007_BORING LOGS2.dgn Division: BRIDGE Username: brian.j.nichols Date:3/7/2011

Maine Department of Transportation

Soil/Rock Exploration Log
US CUSTOMARY UNITS

Project: Princeton Bridge #2688 over Grand Falls Flowage
Location: Princeton, Maine

Boring No.: BB-PIT-201
PIN: 12662.00

Driller:	MaineDOT	Elevation (ft.)	209.5
Operator:	Giguere/Giles/Daggett	Datum:	NAVD 88
Logged By:	B. Wilder	Rig Type:	CME 45C
Date Start/Finish:	10/28/10; 07:30-10:30	Drilling Method:	Cased Wash Boring
Boring Location:	17+85, 8.0 ft Lt.	Casing ID/OD:	NW
Hammer Efficiency Factor: 0.84		Hammer Type:	Automatic ☒ Hydraulic ☐ Rope & Cathead ☐
Auger ID/OD:	5" Solid Stem		
Sampler:	Standard Split Spoon		
Hammer Wt./Fall:	140#/30"		
Core Barrel:	NQ-2"		
Water Level*:	5.0 ft bgs.		

Definitions:
D = Split Spoon Sample
MD = Unsuccessful Split Spoon Sample attempt
U = Thin Wall Tube Sample
MU = Unsuccessful Thin Wall Tube Sample attempt
V = Insitu Vane Shear Test. PP = Pocket Penetrometer
MV = Unsuccessful Insitu Vane Shear Test attempt
R = Rock Core Sample
SSA = Solid Stem Auger
HSA = Hollow Stem Auger
RC = Roller Cone
WOH = weight of 140lb. hammer
WOR/C = weight of rods or casing
WO1P = Weight of one person
S_u = Insitu Field Vane Shear Strength (psf)
T_v = Pocket Torvane Shear Strength (psf)
q_p = Unconfined Compressive Strength (ksf)
N-uncorrected = Raw field SPT N-value
Hammer Efficiency Factor = Annual Calibration Value
N_{60} = SPT N-uncorrected corrected for hammer efficiency
N_{60} = (Hammer Efficiency Factor/60%)*N-uncorrected
$S_{u(lab)}$ = Lab Vane Shear Strength (psf)
WC = water content, percent
LL = Liquid Limit
PL = Plastic Limit
PI = Plasticity Index
G = Grain Size Analysis
C = Consolidation Test

Depth (ft.)	Sample No.	Pen./Rec. (in.)	Sample Depth (ft.)	Blows (/6 in. Shear Strength psf or RQD (%)	N-uncorrected	N_{60}	Casing Blows	Elevation (ft.)	Visual Description and Remarks	Laboratory Testing Results/ AASHTO and Unified Class
0							SSA	208.80	PAVEMENT. 0.70	
	1D	24/12	1.00 - 3.00	10/7/6/5	13	18		206.50	Brown, damp, medium dense, gravelly, fine to coarse SAND, some silt, (Fill) 3.00	
5	2D	24/17	5.00 - 7.00	4/3/4/6	7	10		201.50	Light brown, damp, loose, fine to coarse SAND, some gravel, some silt, (Fill). 8.00	GW237518 A-1-b, SM WC=9.5%
10	3D	24/15	10.00 - 12.00	5/7/6/12	13	18	50		Grey, saturated, medium dense, gravelly, fine to coarse SAND, trace silt, trace wood fragments; gravel is fine to coarse rounded to coarse angular granite rock fragments, (Fill)	
							53			
							68			
	R1	60/60	13.10 - 18.10	RQD = 17%			030 NQ-2	196.40	030 blows for 0.1 ft. 13.10	
15								191.40	Top of Bedrock at Elev. 196.4 ft. R1:Bedrock: Grey, fine grained, interbedded SILTSTONE and SLATE, hard, fresh, thinly laminated in slate to massive siltstone beds, two joint sets, one at 45 degrees along bedding, 2nd vertical. Flume Ridge Formation. Rock Mass Quality: Very Poor. R1:Core Times (min:sec) 13.1-14.1 ft (7:00) 14.1-15.1 ft (4:00) 15.1-16.1 ft (3:45) 16.1-17.1 ft (4:10) No Water Return 17.1-18.1 ft (4:45) " " " 100% Recovery 18.10	
20									Bottom of Exploration at 18.10 feet below ground surface.	
25										

Remarks:

Stratification lines represent approximate boundaries between soil types; transitions may be gradual.

* Water level readings have been made at times and under conditions stated. Groundwater fluctuations may occur due to conditions other than those present at the time measurements were made.

Page 1 of 1

Boring No.: BB-PIT-201

Maine Department of Transportation

Soil/Rock Exploration Log
US CUSTOMARY UNITS

Project: Princeton Bridge #2688 over Grand Falls Flowage
Location: Princeton, Maine

Boring No.: BB-PIT-203
PIN: 12662.00

Driller:	MaineDOT	Elevation (ft.)	197.9
Operator:	Giguere/Giles/Daggett	Datum:	NAVD 88
Logged By:	B. Wilder	Rig Type:	CME 45C
Date Start/Finish:	10/28/10; 13:00-15:30	Drilling Method:	Cased Wash Boring
Boring Location:	18+63, 7.5 ft Lt.	Casing ID/OD:	NW
Hammer Efficiency Factor: 0.84		Hammer Type:	Automatic ☒ Hydraulic ☐ Rope & Cathead ☐
Auger ID/OD:	N/A		
Sampler:	Standard Split Spoon		
Hammer Wt./Fall:	140#/30"		
Core Barrel:	NQ-2"		
Water Level*:	Water Boring		

Definitions:
D = Split Spoon Sample
MD = Unsuccessful Split Spoon Sample attempt
U = Thin Wall Tube Sample
MU = Unsuccessful Thin Wall Tube Sample attempt
V = Insitu Vane Shear Test. PP = Pocket Penetrometer
MV = Unsuccessful Insitu Vane Shear Test attempt
R = Rock Core Sample
SSA = Solid Stem Auger
HSA = Hollow Stem Auger
RC = Roller Cone
WOH = weight of 140lb. hammer
WOR/C = weight of rods or casing
WO1P = Weight of one person
S_u = Insitu Field Vane Shear Strength (psf)
T_v = Pocket Torvane Shear Strength (psf)
q_p = Unconfined Compressive Strength (ksf)
N-uncorrected = Raw field SPT N-value
Hammer Efficiency Factor = Annual Calibration Value
N_{60} = SPT N-uncorrected corrected for hammer efficiency
N_{60} = (Hammer Efficiency Factor/60%)*N-uncorrected
$S_{u(lab)}$ = Lab Vane Shear Strength (psf)
WC = water content, percent
LL = Liquid Limit
PL = Plastic Limit
PI = Plasticity Index
G = Grain Size Analysis
C = Consolidation Test

Depth (ft.)	Sample No.	Pen./Rec. (in.)	Sample Depth (ft.)	Blows (/6 in. Shear Strength psf or RQD (%)	N-uncorrected	N_{60}	Casing Blows	Elevation (ft.)	Visual Description and Remarks	Laboratory Testing Results/ AASHTO and Unified Class
0	1D	24/8	0.00 - 2.00	4/1/1/7	2	3	SPLIT CASE		Grey, saturated, very loose, gravelly, fine to coarse SAND, trace silt, (Reworked Alluvium).	
	2D	24/12	2.00 - 4.00	5/10/13/7	23	32			Grey, saturated, medium dense, gravelly coarse Sand, little pockets of dark brown/grey silty fine sand, odor of "cut back asphalt"; gravel is slate fragments.	
5	R1	32.4/ 32.4	5.30 - 8.00	RQD = 0%			NQ-2	192.60	R1: Weathered bedrock fragments, trace sand and silt. Cobbles or Fractured Bedrock. 5.3-7.3 ft bgs. R1:Core Times (min:sec) 5.3-6.3 ft (2:20) 6.3-7.3 ft (6:45) 5.30	
								190.60	R1:Weathered BEDROCK. 7.3-8.0 ft (9:75) 100% Recovery Core Blocked 7.30	
	R2	48/48	8.00 - 12.00	RQD = 17%				189.90	Top of Intack Bedrock at Elev. 189.9 ft. R2:Bedrock: Grey, fine grained, moderately hard, SLATE, fractured along bedding at 1/4 to 1/2 inch spacing, silt covered surfaces, changing to grey, fine grained, hard, metamorphosed Siltstone, occassional calcite veins, slighty weathered, massive. Flume Ridge Formation. Rock Mass Quality: Very Poor. R2:Core Times (min:sec) 8.0-9.0 ft (3:45) No Water Return 9.0-10.0 ft (6:25) " " " 10.0-11.0 ft (3:25) " " " 11.0-12.0 ft (4:25) " " " 100% Recovery Core Blocked 8.00	
10								185.90		
15										
20									Bottom of Exploration at 12.00 feet below ground surface. 12.00	
25										

Remarks:

12.2 ft from Bridge Deck to Ground.
1.0 ft Concrete Bridge Deck.

Stratification lines represent approximate boundaries between soil types; transitions may be gradual.

* Water level readings have been made at times and under conditions stated. Groundwater fluctuations may occur due to conditions other than those present at the time measurements were made.

Page 1 of 1

Boring No.: BB-PIT-203

Maine Department of Transportation

Soil/Rock Exploration Log
US CUSTOMARY UNITS

Project: Princeton Bridge #2688 over Grand Falls Flowage
Location: Princeton, Maine

Boring No.: BB-PIT-202
PIN: 12662.00

Driller:	MaineDOT	Elevation (ft.)	210.0
Operator:	Giguere/Giles/Daggett	Datum:	NAVD 88
Logged By:	B. Wilder	Rig Type:	CME 45C
Date Start/Finish:	10/28/10; 10:30-13:00	Drilling Method:	Cased Wash Boring
Boring Location:	19+40, 8.0 ft Lt.	Casing ID/OD:	HW & NW
Hammer Efficiency Factor: 0.84		Hammer Type:	Automatic ☒ Hydraulic ☐ Rope & Cathead ☐
Auger ID/OD:	5" Solid Stem		
Sampler:	Standard Split Spoon		
Hammer Wt./Fall:	140#/30"		
Core Barrel:	NQ-2"		
Water Level*:	9.5 ft bgs.		

Definitions:
D = Split Spoon Sample
MD = Unsuccessful Split Spoon Sample attempt
U = Thin Wall Tube Sample
MU = Unsuccessful Thin Wall Tube Sample attempt
V = Insitu Vane Shear Test. PP = Pocket Penetrometer
MV = Unsuccessful Insitu Vane Shear Test attempt
R = Rock Core Sample
SSA = Solid Stem Auger
HSA = Hollow Stem Auger
RC = Roller Cone
WOH = weight of 140lb. hammer
WOR/C = weight of rods or casing
WO1P = Weight of one person
S_u = Insitu Field Vane Shear Strength (psf)
T_v = Pocket Torvane Shear Strength (psf)
q_p = Unconfined Compressive Strength (ksf)
N-uncorrected = Raw field SPT N-value
Hammer Efficiency Factor = Annual Calibration Value
N_{60} = SPT N-uncorrected corrected for hammer efficiency
N_{60} = (Hammer Efficiency Factor/60%)*N-uncorrected
$S_{u(lab)}$ = Lab Vane Shear Strength (psf)
WC = water content, percent
LL = Liquid Limit
PL = Plastic Limit
PI = Plasticity Index
G = Grain Size Analysis
C = Consolidation Test

Depth (ft.)	Sample No.	Pen./Rec. (in.)	Sample Depth (ft.)	Blows (/6 in. Shear Strength psf or RQD (%)	N-uncorrected	N_{60}	Casing Blows	Elevation (ft.)	Visual Description and Remarks	Laboratory Testing Results/ AASHTO and Unified Class
0							SSA	209.30	PAVEMENT. 0.70	
	1D	8.4/8	1.50 - 2.20	14/50(2.4")	---				Brown, dry, very dense, gravelly, fine to coarse SAND, little silt, occasional cobbles, (Fill). Cobble from 3.4-3.9 ft bgs. Cobble from 4.5-4.8 ft bgs.	
5	2D	24/13	5.00 - 7.00	8/5/6/24	11	15		205.00	Brown, damp, medium dense, fine to coarse SAND, some gravel, some silt, (Fill). 5.00 Boulder from 7.2-8.6 ft bgs.	GW237519 A-1-b, SM WC=8.0%
							75			
							37	200.50		
10	3D	24/5	10.00 - 12.00	6/2/8/9	10	14	18		Telescoped with NW Casing through Boulder at 10.0 ft bgs. Grey, wet, medium dense, gravelly, fine to coarse SAND, trace silt; gravel is coarse, broken rock fragments. 9.50 Wood fibers and pieces in wash water from 12.5-13.5 ft bgs.	
							32			
							34			
							81			
							0178	195.20	0178 blows for 0.8 ft.	
15	R1	60/54	15.00 - 20.00	RQD = 27%			NQ-2	195.00	Top of Bedrock at Elev. 195.2 ft. Roller Coned ahead from 14.8-15.0 ft bgs. 14.80 R1:Bedrock: Grey, fine grained, hard, fresh, metamorphic SILTSTONE and SLATE, finely laminated slate to massive siltstone beds, jointing along bedding at moderately dipping angles, second set vertical. Flume Ridge Formation. Rock Mass Quality: Poor. R1:Core Times (min:sec) 15.0-16.0 ft (3:15) 16.0-17.0 ft (3:50) No Water Return 17.0-18.0 ft (3:30) " " " 18.0-19.0 ft (3:25) " " " 19.0-20.0 ft (3:15) " " " 90% Recovery 15.00	
20								190.00		
25									Bottom of Exploration at 20.00 feet below ground surface. 20.00	

Remarks:

Stratification lines represent approximate boundaries between soil types; transitions may be gradual.

* Water level readings have been made at times and under conditions stated. Groundwater fluctuations may occur due to conditions other than those present at the time measurements were made.

Page 1 of 1

Boring No.: BB-PIT-202

STATE OF MAINE
DEPARTMENT OF TRANSPORTATION

AC-BH-1266(200)X

PIN 12662.00

BRIDGE NO. 2688 BRIDGE PLANS

PROJ. MANAGER	D. ANDERSON	BY	DATE
DESIGN-DETAILED	L. KRUSINSKI	T. WHITE	
CHECKED-REVIEWED			
DESIGN2-DETAILED2			
DESIGN3-DETAILED3			
REVISIONS 1			
REVISIONS 2			
REVISIONS 3			
REVISIONS 4			
FIELD CHANGES			

SIGNATURE

P.E. NUMBER

DATE

PRINCETON BRIDGE
GRAND FALLS FLOWAGE
PRINCETON WASHINGTON COUNTY

BORING LOGS

SHEET NUMBER
7
OF 33

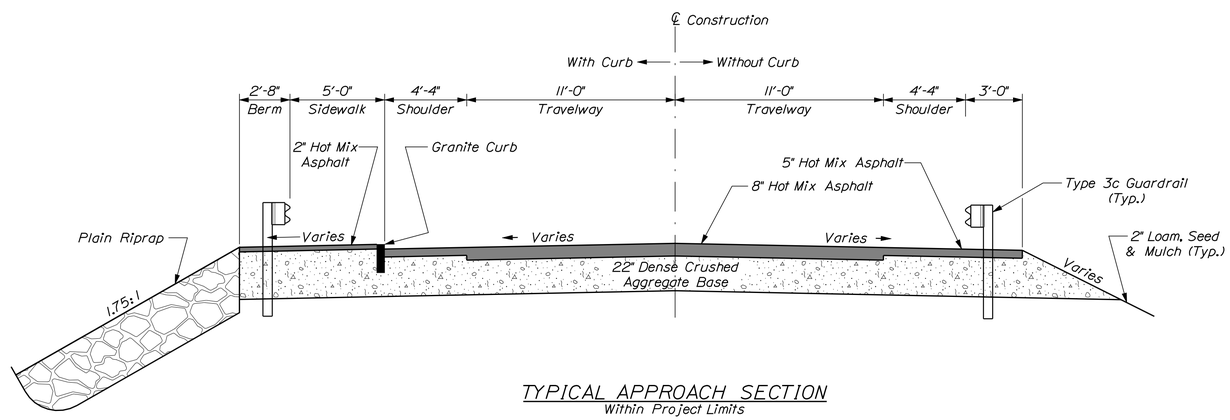

TYPICAL APPROACH SECTION
Within Project Limits

STATE OF MAINE
DEPARTMENT OF TRANSPORTATION

AC-BH-1266(200)X

PIN 12662.00

BRIDGE NO. 2688

BRIDGE PLANS

		BY	DATE
PROJ. MANAGER	S. BODGE		
DESIGN-DETAILED	B. REEVES	B. NICHOLS	FEB 2011
CHECKED-REVIEWED	E. CASWELL	D. SULLIVAN	
DESIGN2-DETAILED2			
DESIGN3-DETAILED3			
REVISIONS: 1			
REVISIONS: 2			
REVISIONS: 3			
REVISIONS: 4			
FIELD CHANGES			

SIGNATURE

P.E. NUMBER

DATE

PRINCETON BRIDGE
GRAND FALLS FLOWAGE
PRINCETON\PASSAMAQUODDY WASHINGTON COUNTY

TYPICAL SECTION

SHEET NUMBER
8
OF 33

Filename: ...\msto\008_Typical_Sections.dgn Division: BRIDGE Username: brian.j.nichols Date:3/7/2011

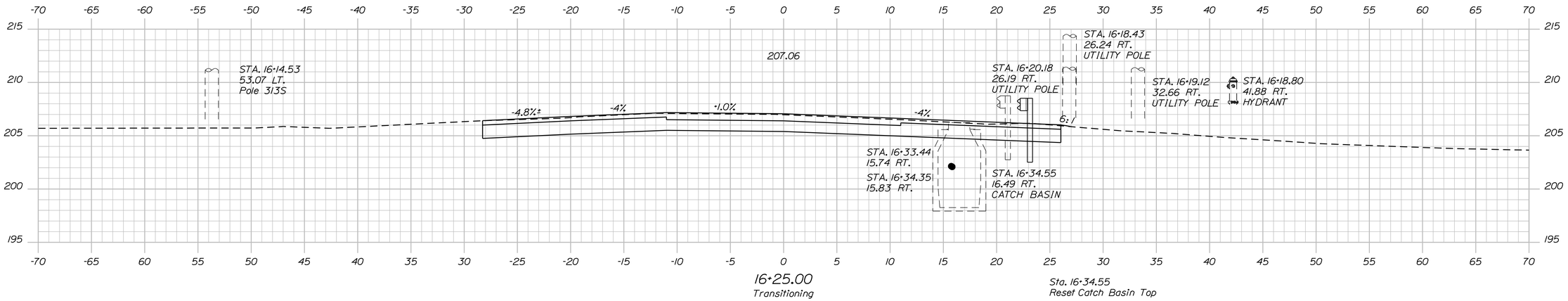

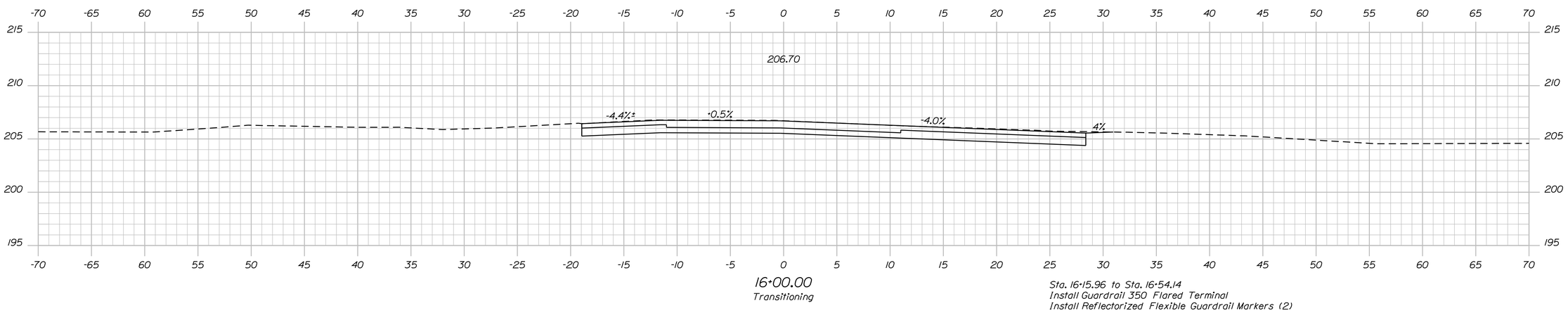

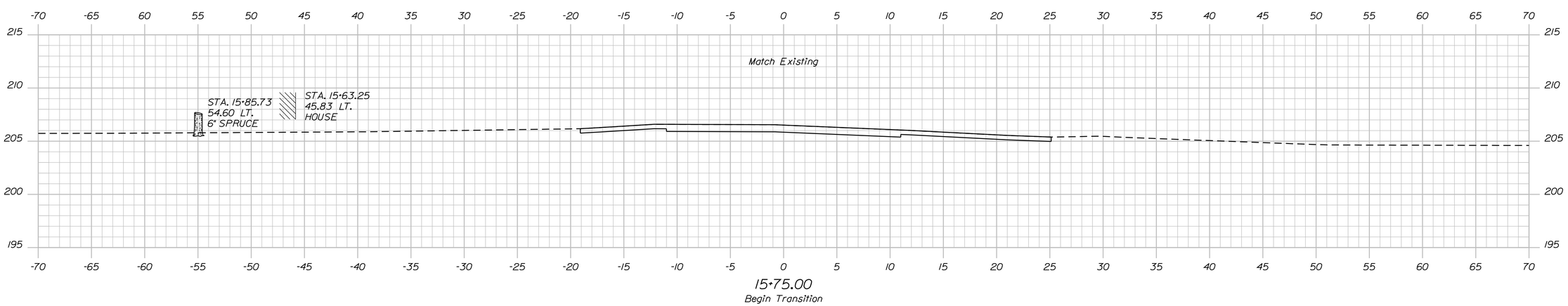

STATE OF MAINE
DEPARTMENT OF TRANSPORTATION

AC-BH-1266(200)X

PIN 12662.00

BRIDGE NO. 2888

BRIDGE PLANS

PROJ. MANAGER	S. BODGE	BY	DATE
DESIGN-DETAILED	B. REEVES	B. NICHOLS	FEB 2011
CHECKED-REVIEWED	E. CASWELL	D. SULLIVAN	------
DESIGN2-DETAILED2	------	------	------
DESIGN3-DETAILED3	------	------	------
REVISIONS 1	------	------	------
REVISIONS 2	------	------	------
REVISIONS 3	------	------	------
REVISIONS 4	------	------	------
FIELD CHANGES	------	------	------

SIGNATURE

P.E. NUMBER

DATE

PRINCETON BRIDGE
GRAND FALLS FLOWAGE
PRINCETON\PASSAMAQUODDY WASHINGTON COUNTY

CROSS SECTIONS

SHEET NUMBER

9

OF 33

Sta. 15+75.00 to Sta. 16+25.00

Filename: ...\msta\009_XSECT_15+75_001.dgn Division: BRIDGE Username: brian.j.nichols Date:3/7/2011

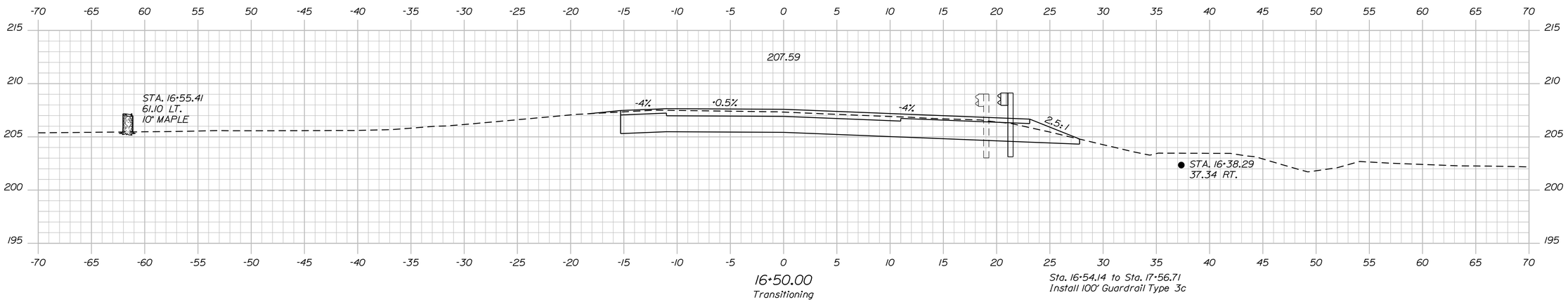

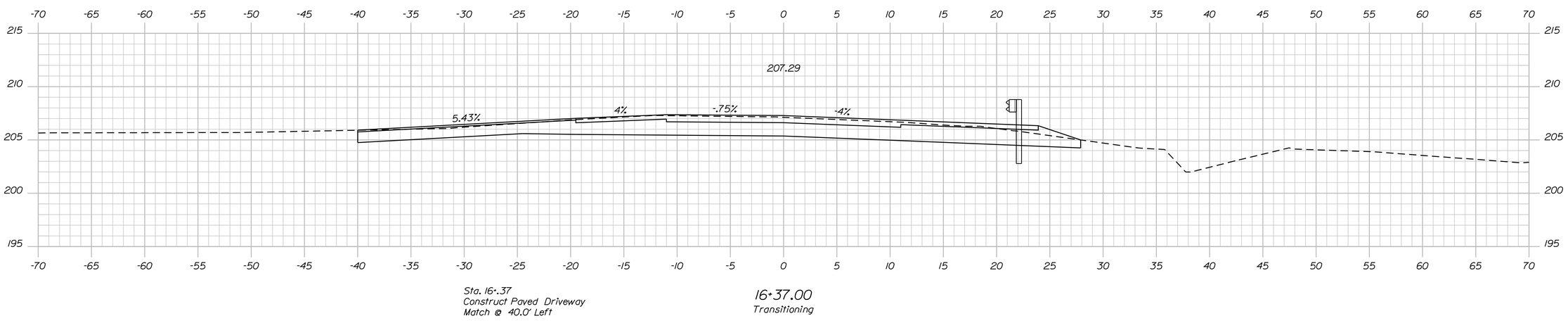

STATE OF MAINE
DEPARTMENT OF TRANSPORTATION

AC-BH-1266(200)X

PIN 12662.00

BRIDGE NO. 2888

BRIDGE PLANS

		BY	DATE
PROJ. MANAGER	S. BOOGE		
DESIGN-DETAILED	B. REEVES	B. NICHOLS	FEB 2011
CHECKED-REVIEWED	E. CASWELL	D. SULLIVAN	
DESIGN2-DETAILED2			
DESIGN3-DETAILED3			
REVISIONS 1			
REVISIONS 2			
REVISIONS 3			
REVISIONS 4			
FIELD CHANGES			

SIGNATURE

P.E. NUMBER

DATE

PRINCETON BRIDGE
GRAND FALLS FLOWAGE
PRINCETON\PASSAMAQUODDY COUNTY

CROSS SECTIONS

SHEET NUMBER

10

OF 33

Filename: ...\msta\010_XSECT_16+37_001.dgn Division: BRIDGE Username: brian.j.nichols Date:3/7/2011

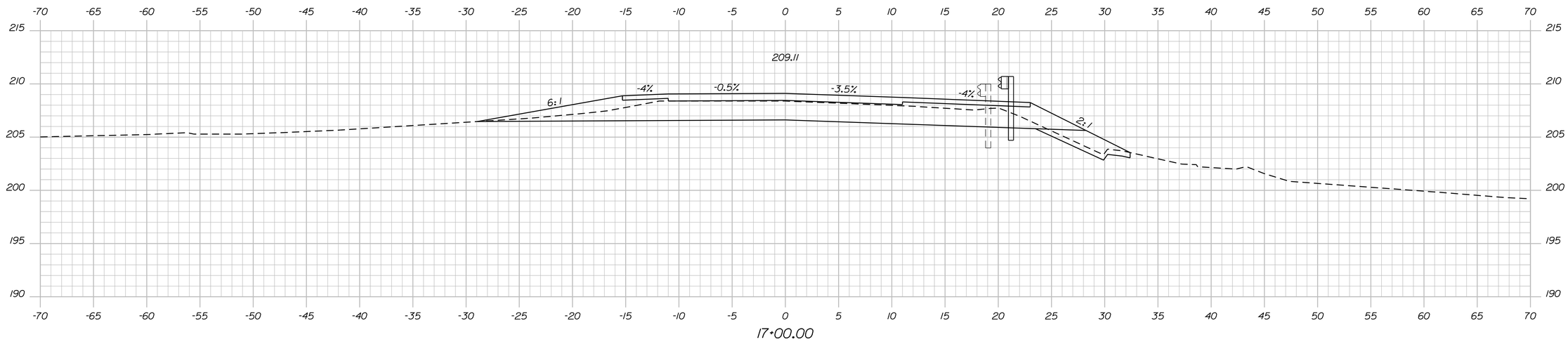

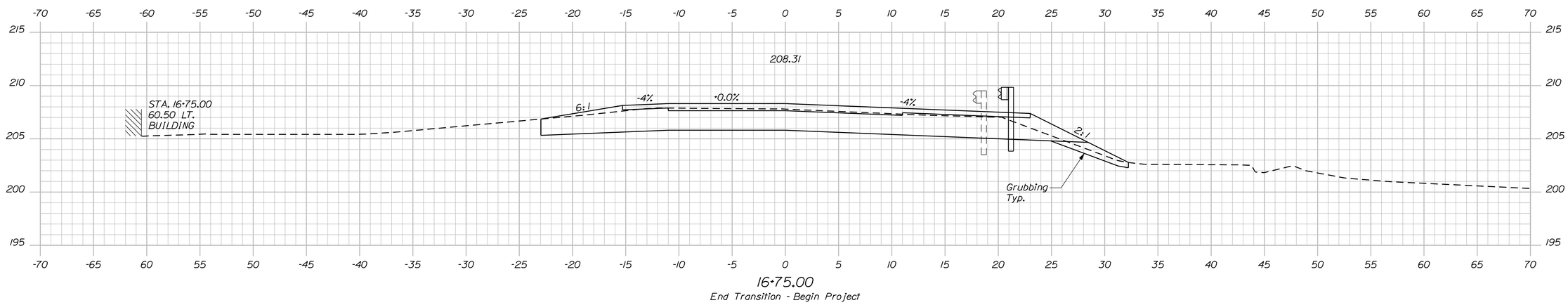

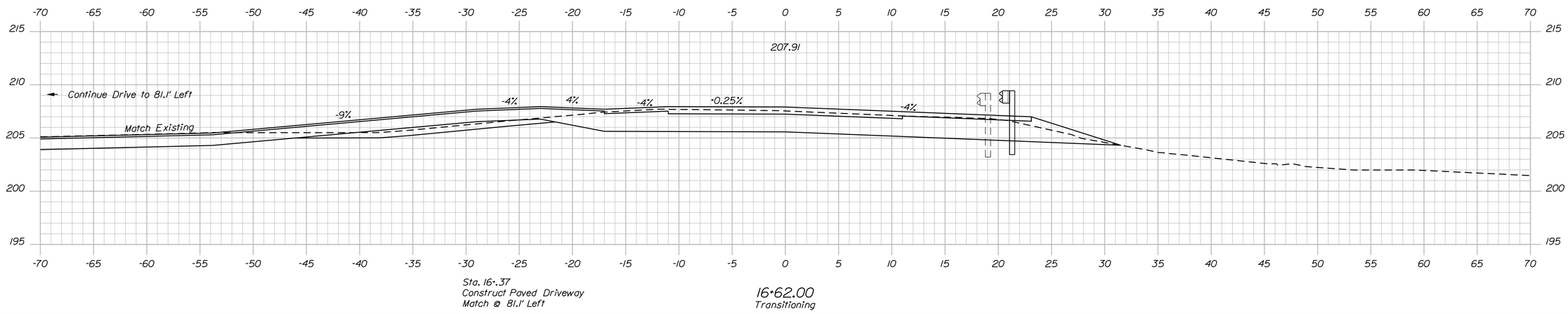

STATE OF MAINE
DEPARTMENT OF TRANSPORTATION

AC-BH-1266(200)X

PIN 12662.00

BRIDGE NO. 2688

BRIDGE PLANS

PROJ. MANAGER	S. BOOGE	BY	DATE
DESIGN-DETAILED	B. REEVES	B. NICHOLS	FEB 2011
CHECKED-REVIEWED	E. CASWELL	D. SULLIVAN	------
DESIGN2-DETAILED2	------	------	------
DESIGN3-DETAILED3	------	------	------
REVISIONS 1	------	------	------
REVISIONS 2	------	------	------
REVISIONS 3	------	------	------
REVISIONS 4	------	------	------
FIELD CHANGES	------	------	------

SIGNATURE

P.E. NUMBER

DATE

PRINCETON BRIDGE
GRAND FALLS FLOWAGE
PRINCETON\PASSAMAQUODDY WASHINGTON COUNTY

CROSS SECTIONS

SHEET NUMBER

11

OF 33

Sta. 16+50.00 to Sta. 17+00.00

Filename: ...\msta\011_XSECT_16+62_002.dgn Division: BRIDGE Username: brian.j.nichols Date:3/7/2011

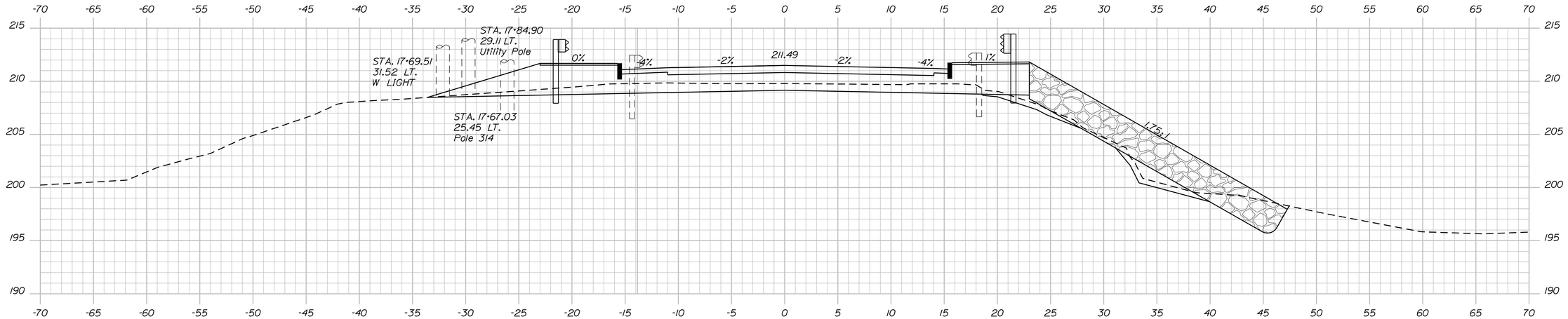

17+75.00

Sta. 17+56.71 to Transition Barrier
Install Bridge Transition Type 1

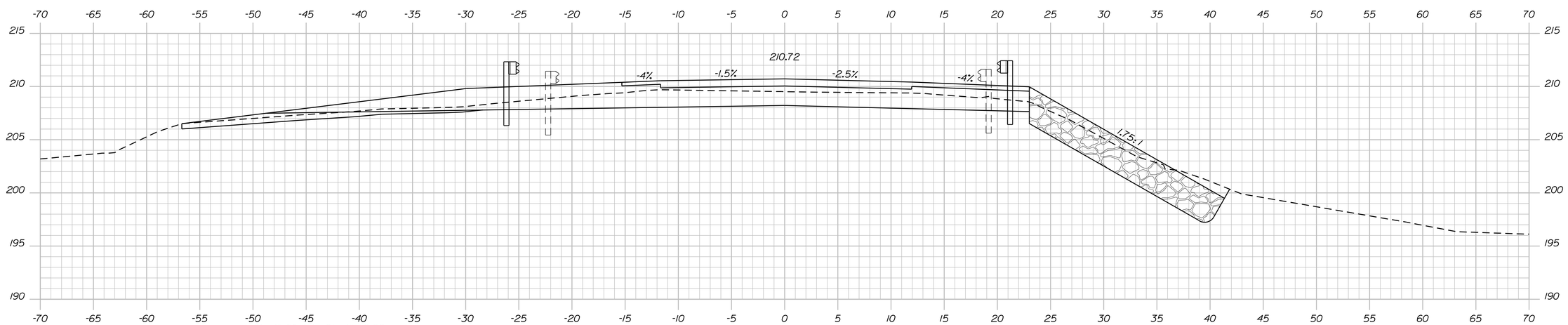

Sta. 17+60.41 to Sta. 17+72.82
Install 12.5' Guardrail Type 3c
Sta. 17+72.82 to Transition Barrier
Install Bridge Transition Type 1

17+50.00

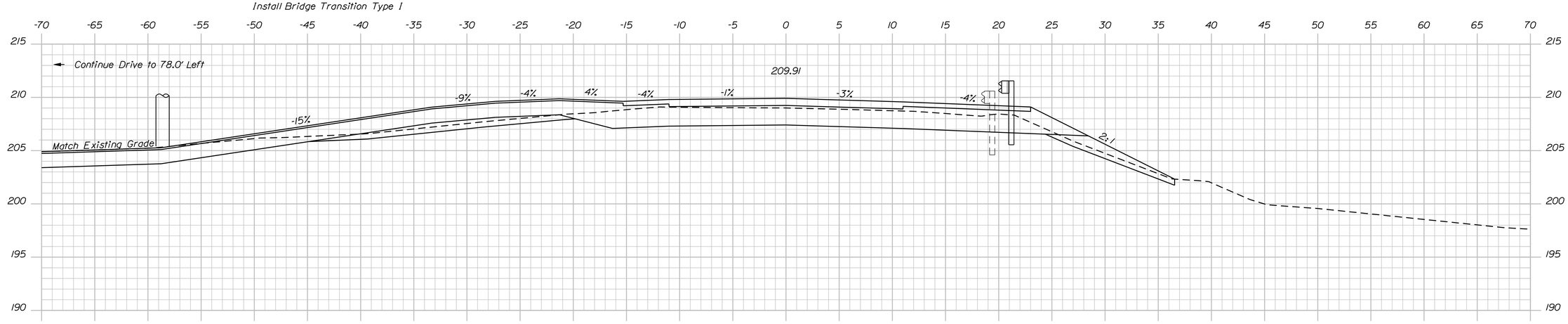

Sta. 16+.37
Construct Paved Driveway
Match @ 78.0' Left

Sta. 17+39.87 58.00' Left
Proposed Utility Pole

Sta. 17+46.18 to Sta. 17+60.41
Install Terminal End
Install 25' Guardrail Type 3c (15' radius)
Install Reflectorized Flexible Guardrail Markers (2)

17+25.00

STATE OF MAINE
DEPARTMENT OF TRANSPORTATION

AC-BH-1266(200)X

PIN 12662.00

BRIDGE NO. 2688

BRIDGE PLANS

PROJ. MANAGER	S. BODGE	BY	DATE
DESIGN-DETAILED	B. REEVES	B. NICHOLS	FEB 2011
CHECKED-REVIEWED	E. CASWELL	D. SULLIVAN	------
DESIGN2-DETAILED2	------	------	------
DESIGN3-DETAILED3	------	------	------
REVISIONS 1	------		------
REVISIONS 2	------		------
REVISIONS 3	------		------
REVISIONS 4	------		------
FIELD CHANGES	------		------

SIGNATURE

P.E. NUMBER

DATE

PRINCETON BRIDGE
GRAND FALLS FLOWAGE
PRINCETON\PASSAMAQUODDY WASHINGTON COUNTY

CROSS SECTIONS

SHEET NUMBER

12

OF 33

Filename: ...\msta\012_XSECT_17+25_003.dgn Division: BRIDGE Username: brian.j.nichols Date:3/7/2011

Sta. 17+25.00 to Sta. 17+75.00

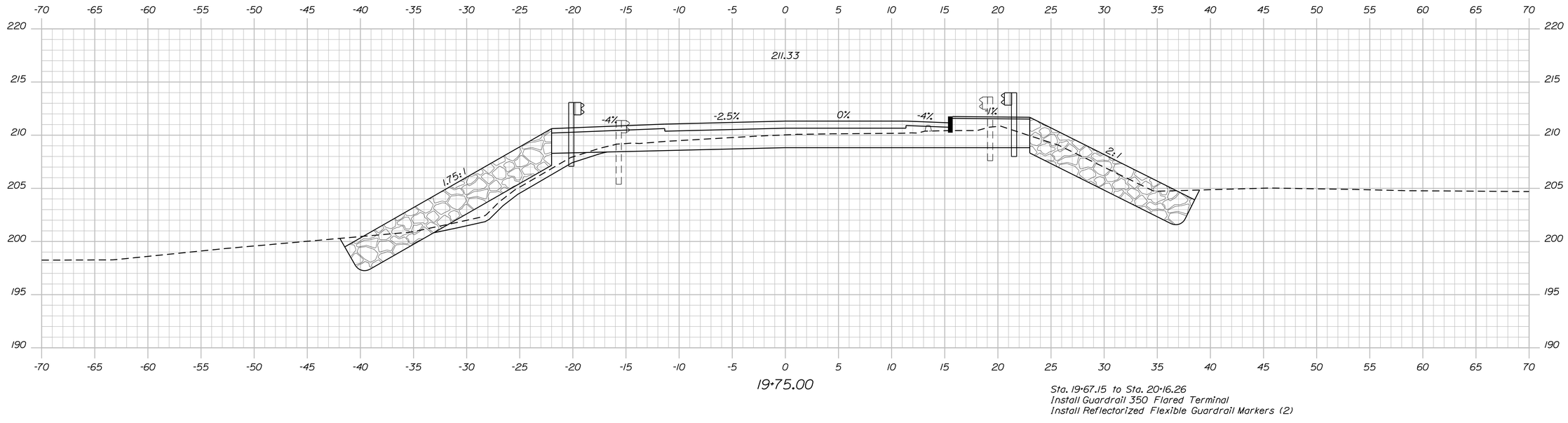

Sta. 19+67.15 to Sta. 20+16.26
Install Guardrail 350 Flared Terminal
Install Reflectorized Flexible Guardrail Markers (2)

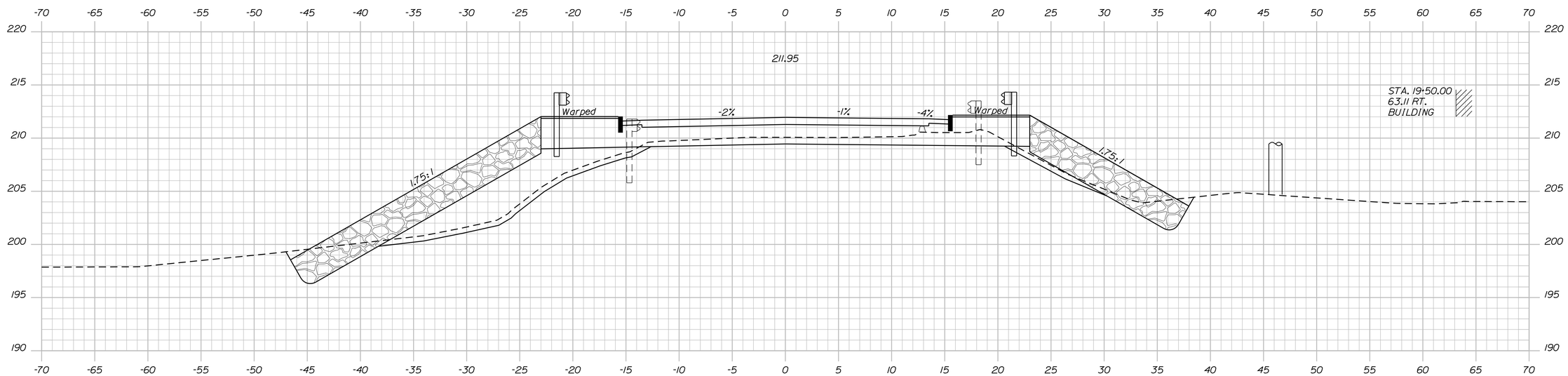

Bridge Transition to Sta. 19+67.15
Install Bridge Transtion Type I
19+67.15 to Sta. 21+18±
Install Approx 150' Guardrail Type 3c
(Match into existing guardrail)

Bridge Transition to Sta. 19+67.15
Install Bridge Transtion Type I
Sta. 19+67.15 to Sta. 19+79.64
Install 12.5' Guardrail Type 3c

Sta. 19+70.36 45.5' Right
Proposed Utility Pole

STATE OF MAINE
DEPARTMENT OF TRANSPORTATION

AC-BH-1266(200)X

PIN 12662.00

BRIDGE NO. 2688

BRIDGE PLANS

		BY	DATE
PROJ. MANAGER	S. BOOGE		
DESIGN-DETAILED	B. REEVES	B. NICHOLS	FEB 2011
CHECKED-REVIEWED	E. CASWELL	D. SULLIVAN	
DESIGN2-DETAILED2			
DESIGN3-DETAILED3			
REVISIONS 1			
REVISIONS 2			
REVISIONS 3			
REVISIONS 4			
FIELD CHANGES			

SIGNATURE

P.E. NUMBER

DATE

PRINCETON BRIDGE
GRAND FALLS FLOWAGE
PRINCETON\PASSAMAQUODDY WASHINGTON COUNTY

CROSS SECTIONS

SHEET NUMBER
13
OF 33

Sta. 19+50.00 to Sta. 19+75.00

Filename: ...\msta\013_XSECT_19+50_004.dgn Division: BRIDGE Username: brian.j.nichols Date:3/7/2011

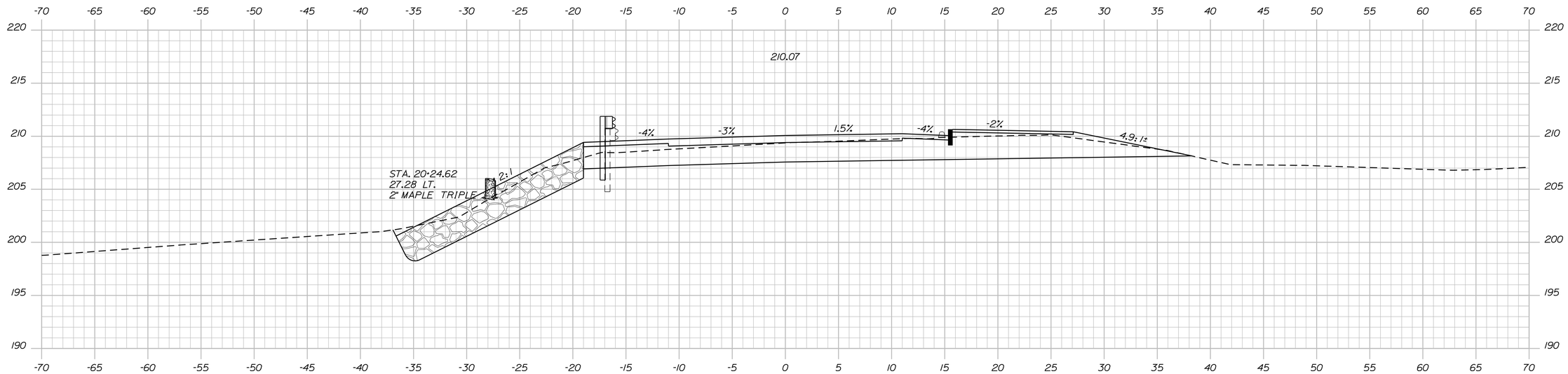

20+25.00
End Project - Begin Transition

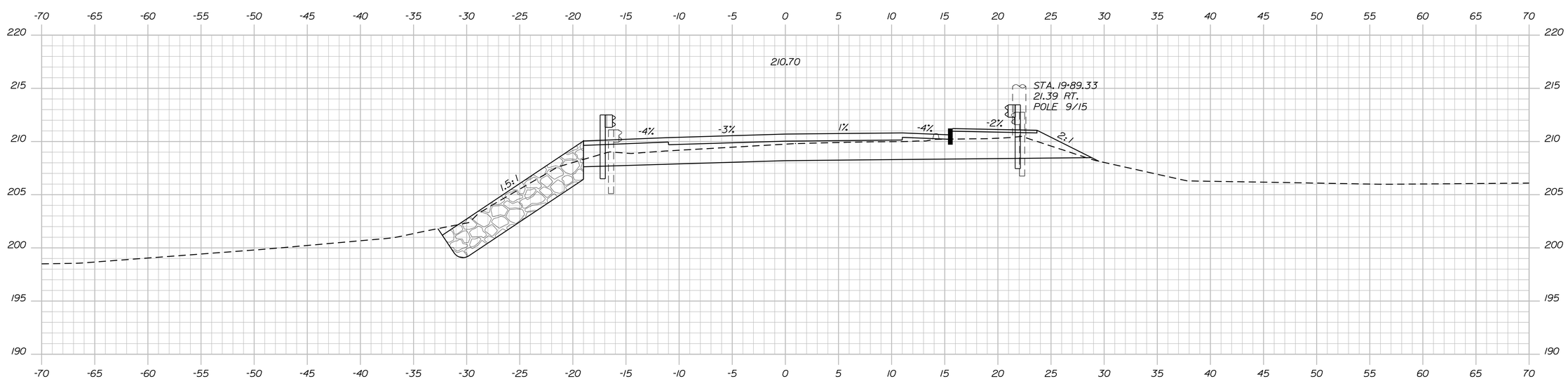

20+00.00

Sta. 20+00.00 to Sta. 20+25.00

STATE OF MAINE
DEPARTMENT OF TRANSPORTATION

AC-BH-1266(200)X

PIN 12662.00

BRIDGE NO. 2888

BRIDGE PLANS

PROJ. MANAGER	S. BODGE	BY	DATE
DESIGN-DETAILED	B. REEVES	B. NICHOLS	FEB 2011
CHECKED-REVIEWED	E. CASWELL	D. SULLIVAN	------
DESIGN2-DETAILED2	------	------	------
DESIGN3-DETAILED3	------	------	------
REVISIONS 1	------	------	------
REVISIONS 2	------	------	------
REVISIONS 3	------	------	------
REVISIONS 4	------	------	------
FIELD CHANGES	------	------	------

SIGNATURE

P.E. NUMBER

DATE

PRINCETON BRIDGE
GRAND FALLS FLOWAGE
PRINCETON\PASSAMAQUODDY WASHINGTON COUNTY

CROSS SECTIONS

SHEET NUMBER

14

OF 33

Filename: ...\msta\014_XSECT_20+00_005.dgn Division: BRIDGE Username: brian.j.nichols Date:3/7/2011

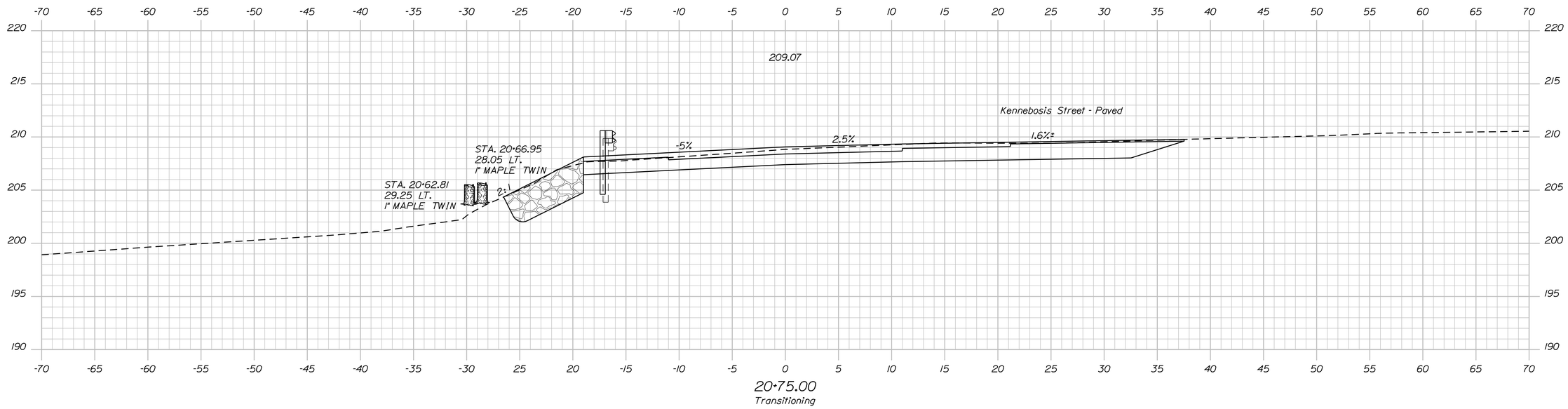

20+75.00
Transitioning

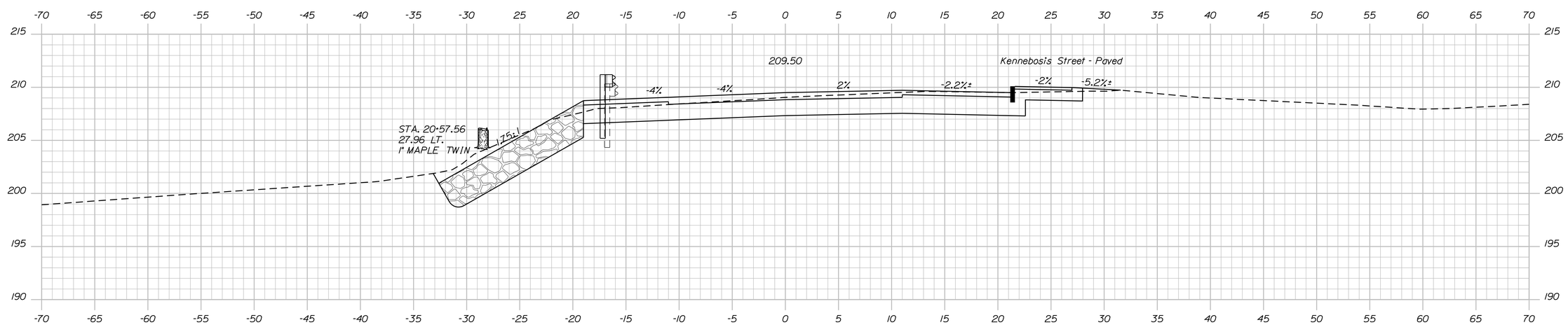

20+50.00
Transitioning

STATE OF MAINE
DEPARTMENT OF TRANSPORTATION

AC-BH-1266(200)X

PIN 12662.00

BRIDGE NO. 2888

BRIDGE PLANS

PROJ. MANAGER	S. BODGE	BY	DATE
DESIGN-DETAILED	B. REEVES	B. NICHOLS	FEB 2011
CHECKED-REVIEWED	E. CASWELL	D. SULLIVAN	------
DESIGN2-DETAILED2	------	------	------
DESIGN3-DETAILED3	------	------	------
REVISIONS 1	------	------	------
REVISIONS 2	------	------	------
REVISIONS 3	------	------	------
REVISIONS 4	------	------	------
FIELD CHANGES	------	------	------

SIGNATURE

P.E. NUMBER

DATE

PRINCETON BRIDGE
GRAND FALLS FLOWAGE
PRINCETON\PASSAMAQUODDY WASHINGTON COUNTY

CROSS SECTIONS

SHEET NUMBER
15
OF 33

Sta. 20+50.00 to Sta. 20+75.00

Filename: ...\msta\015_XSECT_20+50_006.dgn Division: BRIDGE Username: brian.j.nichols Date:3/7/2011

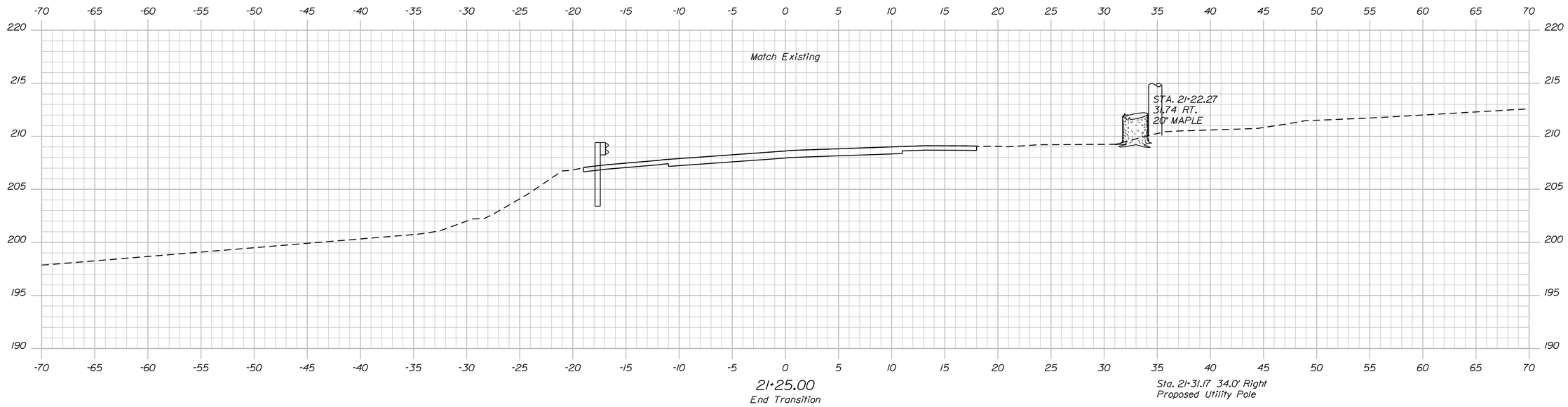

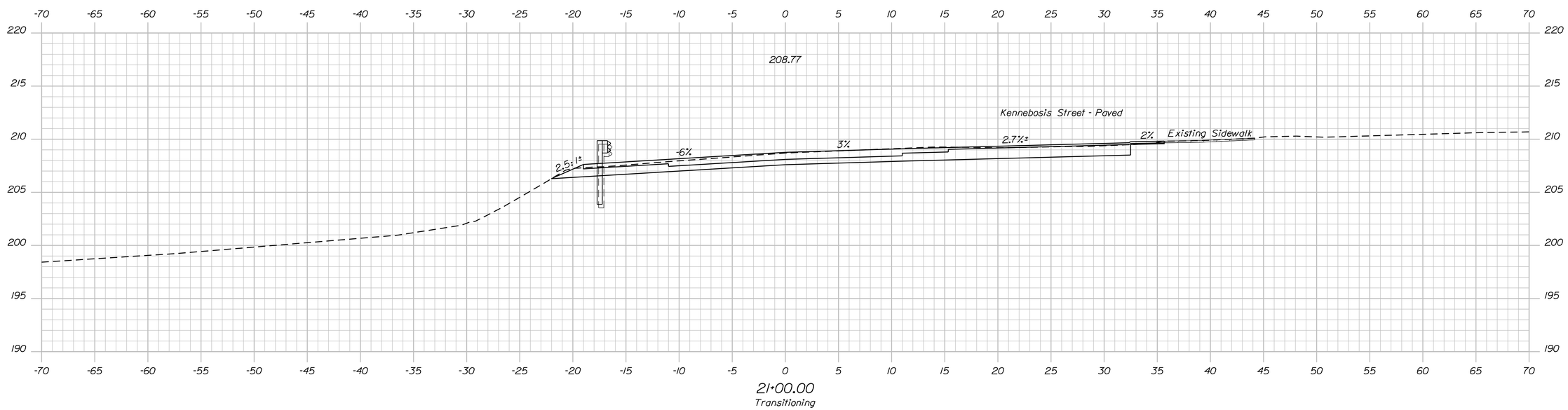

STATE OF MAINE
DEPARTMENT OF TRANSPORTATION

AC-BH-1266(200)X

PIN 12662.00

BRIDGE NO. 2888

BRIDGE PLANS

PROJ. MANAGER	S. BOOGE	BY	DATE
DESIGN-DETAILED	B. REEVES	B. NICHOLS	FEB 2011
CHECKED-REVIEWED	E. CASWELL	D. SULLIVAN	------
DESIGN2-DETAILED2	------	------	------
DESIGN3-DETAILED3	------	------	------
REVISIONS 1	------	------	------
REVISIONS 2	------	------	------
REVISIONS 3	------	------	------
REVISIONS 4	------	------	------
FIELD CHANGES	------	------	------

SIGNATURE

P.E. NUMBER

DATE

PRINCETON BRIDGE
GRAND FALLS FLOWAGE
PRINCETON\PASSAMAQUODDY WASHINGTON COUNTY

CROSS SECTIONS

SHEET NUMBER

16

OF 33

Sta. 21+00.00 to Sta. 21+25.00

Filename: ...\msta\016_XSECT_21+00_007.dgn Division: BRIDGE Username: brian.j.nichols Date:3/7/2011

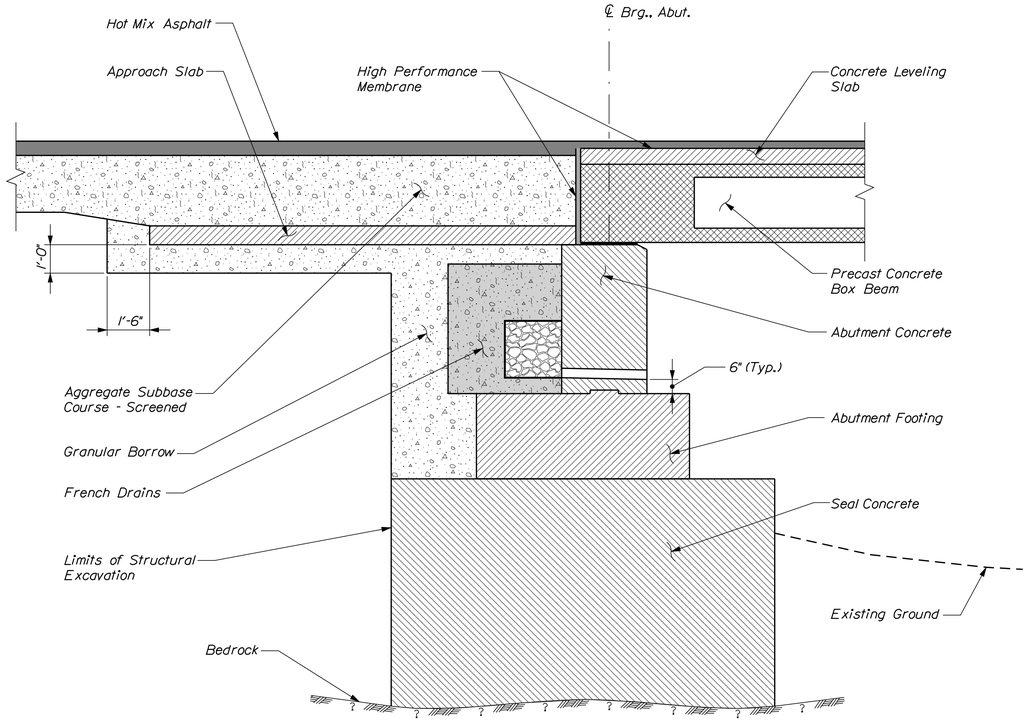

TYPICAL ABUTMENT SECTION

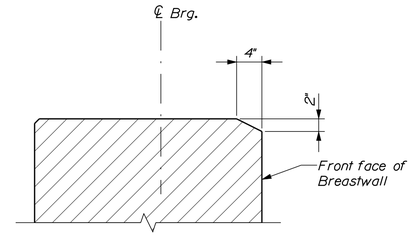

TOP OF BREASTWALL DETAIL

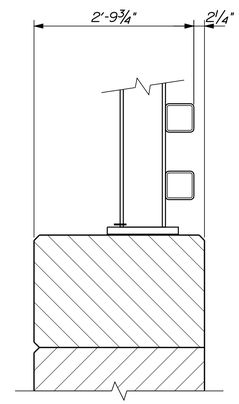

CURB-MOUNTED BRIDGE RAIL SECTION

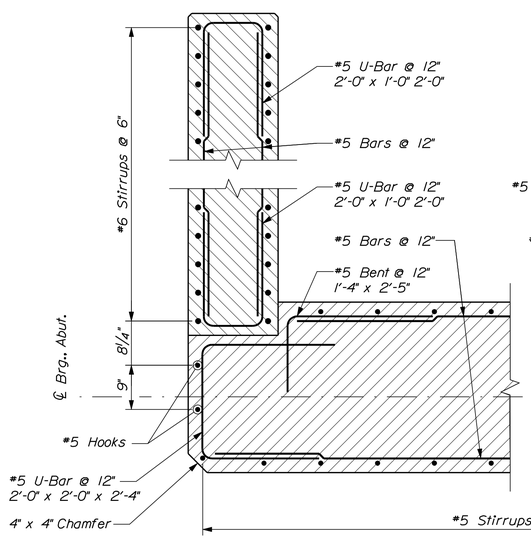

RETURN WING CORNER DETAIL

Typical all wings except upstream wing, Abutment No. 1

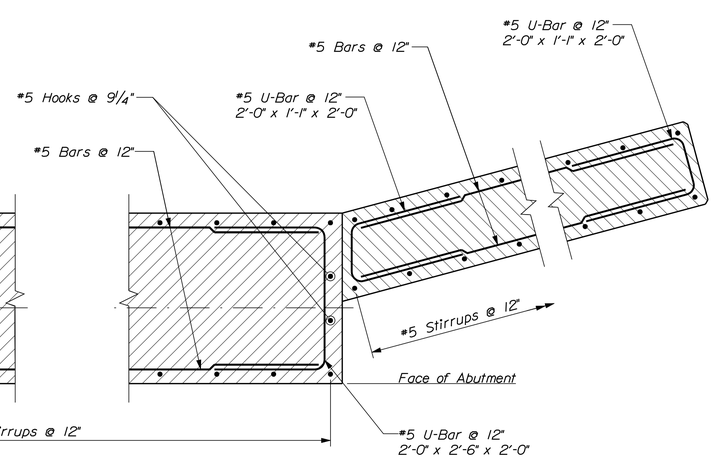

FLARED WING CORNER DETAIL

Upstream wing, Abutment No. 1

SEAL COFFERDAM NOTES

1. Abutment seal concrete shall be placed on bedrock cleaned of all weathered rock, loose fractured rock, boulders and soil. Where the bedrock surface slope exceeds 4H:1V, the bedrock surface shall be benched in level steps or made completely level. Cofferdam excavation inspection shall be the responsibility of the Contractor and be conducted in accordance with Special Provision 511 - Cofferdams. An inspection report shall be submitted to the Resident for review. The report shall include bedrock elevation measurements and observations which conclusively assess the levelness, cleanliness, and sediment thickness. Sediment measurements and bedrock elevation measurements will be taken at a minimum of 20 locations evenly distributed on a regular grid pattern.

2. The horizontal pay limit for seal concrete shall be to the dimensions shown on the plans. No additional payment will be made for concrete placed outside of these limits.

3. When sheet piling is used for seal cofferdams: appropriate rolled corners shall be used; the inside face of the sheet piling shall be at or outside of the seal concrete dimensions shown.

4. The seal concrete placement dimensions shown represent the minimum seal size necessary to meet design requirements and are not based on the use of any particular sheet pile section.

5. The depth of the seal is set for a water elevation of 203.50'. The cofferdam shall be designed to flood or overtop at an elevation of 203.50'.

6. The method of placing dowels in the seal concrete shall be approved by the Resident.

ABUTMENT NOTES

1. The maximum factored applied footing pressure is 7.4 ksf.

2. Structural Earth Excavation, Abutments and Retaining Walls, required more than 12 inches below the bottom of the structure, will be paid for in accordance with Standard Specifications Section 206, Structural Excavation.

3. Reinforcing steel shall have a minimum concrete cover of 2 inches in the walls and 3 inches in the footings unless otherwise noted.

4. Place 4-in. diameter drains in the breastwall and wingwalls at 10-ft maximum spacing. The exact location will be determined by the Resident.

5. To ensure an accurate match with the superstructure, the parapet portions of the wingwalls shall be placed after erection of the precast units.

6. The Contractor shall install Transition Barrier vertical closed stirrups, as shown in Standard Details Section 526, prior to the placement of the curb concrete.

7. Cover joints where waterstops are not required in accordance with Standard Details Section 502.

8. Construct French Drains behind the abutments and wingwalls in accordance with Standard Specifications Section 512, French Drains.

9. Abutments, wingwalls and their footings shall be backfilled with Granular Borrow. Pay limits will be the structural excavation limits in cut areas and a vertical plane located 10 feet behind the walls in fill areas.

STATE OF MAINE
DEPARTMENT OF TRANSPORTATION

AC-BH-1266(200)X

PIN 12662.00

BRIDGE NO. 2688

BRIDGE PLANS

PROJ. MANAGER	S. BODGE	BY	DATE
DESIGN-DETAILED	B. REEVES	B. NICHOLS	FEB 2011
CHECKED-REVIEWED	E. CASWELL	D. SULLIVAN	------
DESIGN2-DETAILED2	------	------	------
DESIGN3-DETAILED3	------	------	------
REVISIONS 1	------	------	------
REVISIONS 2	------	------	------
REVISIONS 3	------	------	------
REVISIONS 4	------	------	------
FIELD CHANGES	------	------	------

SIGNATURE

P.E. NUMBER

DATE

PRINCETON BRIDGE
GRAND FALLS FLOWAGE
PRINCETON\PASSAMAQUODDY WASHINGTON COUNTY

ABUTMENT DETAILS

SHEET NUMBER

17

OF 33

Filename: ...\msta\017_Abutment_Details.dgn Division: BRIDGE Username: brian.j.nichols Date:3/7/2011

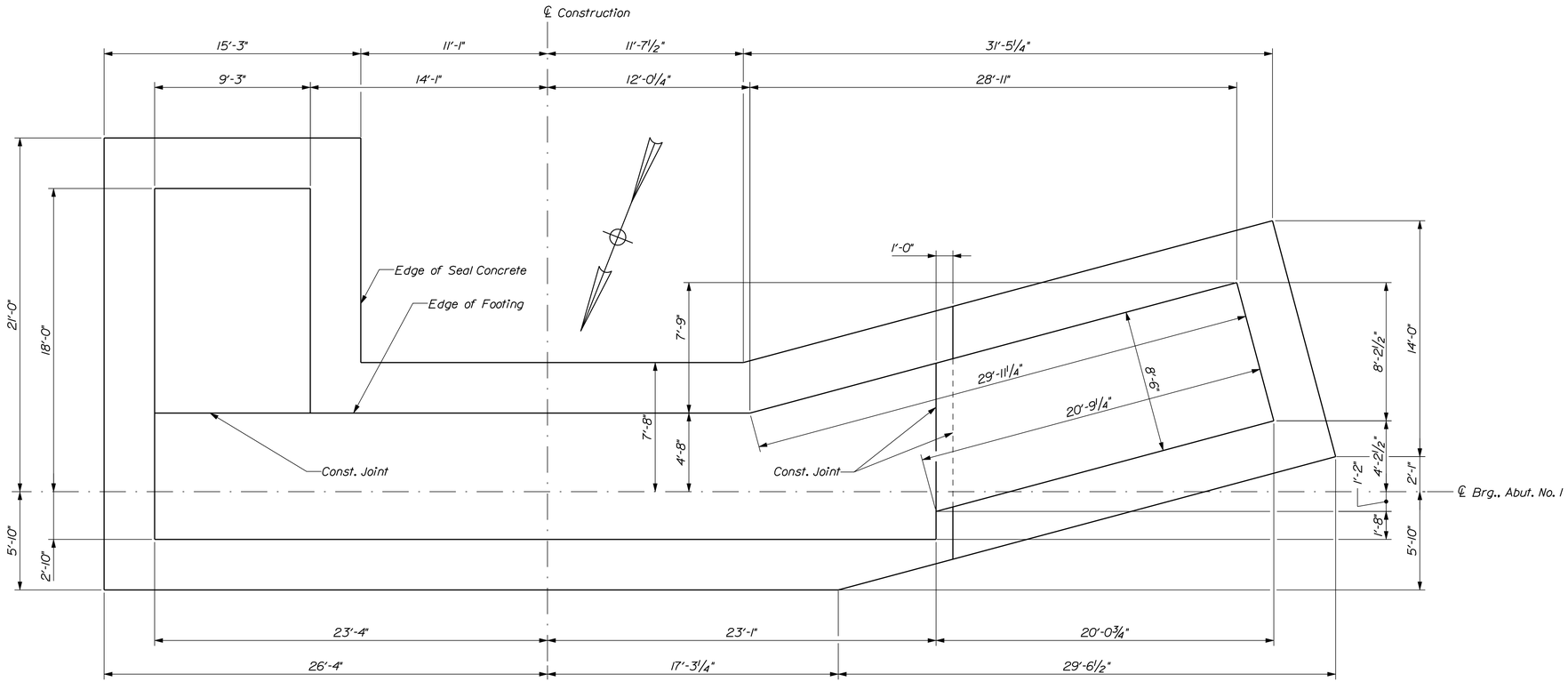

ABUTMENT NO. 1 FOOTING PLAN

Flow

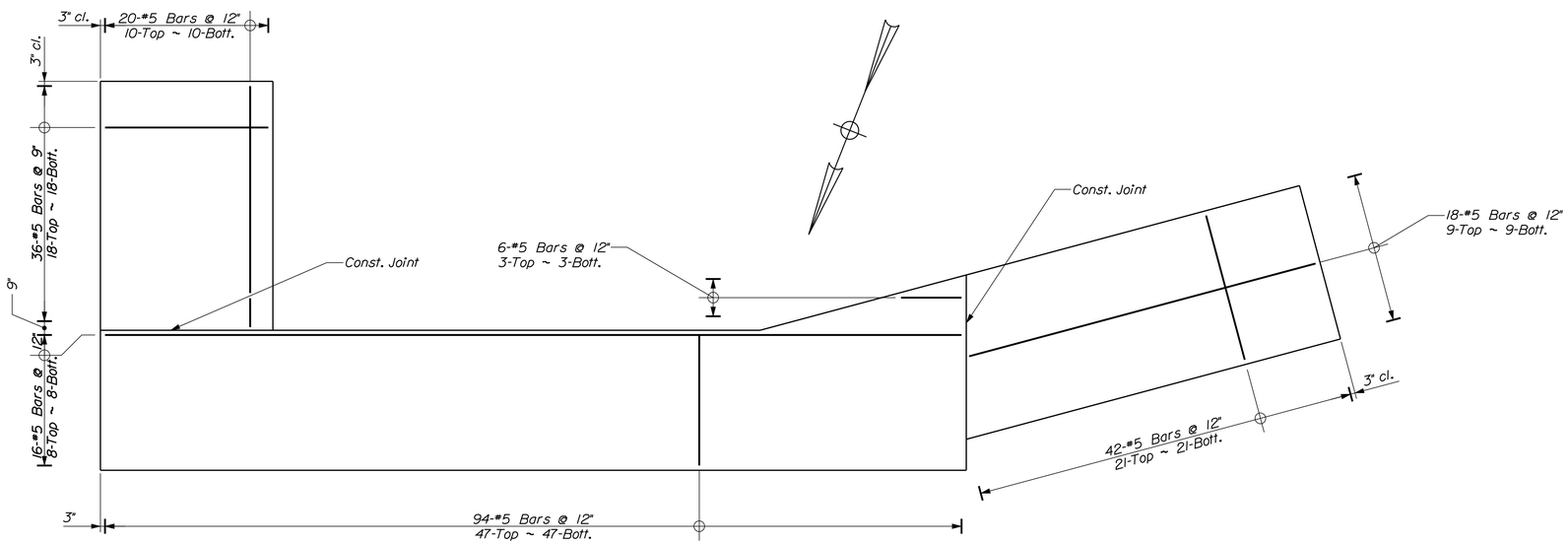

ABUTMENT NO. 1 FOOTING REINFORCING PLAN

Flow

STATE OF MAINE
DEPARTMENT OF TRANSPORTATION

AC-BH-1266(200)X

PIN 12662.00

BRIDGE NO. 2688

BRIDGE PLANS

PROJ. MANAGER	S. BOOGE	BY	DATE
DESIGN-DETAILED	B. REEVES	B. NICHOLS	FEB 2011
CHECKED-REVIEWED	E. CASWELL	D. SULLIVAN	
DESIGN2-DETAILED2			
DESIGN3-DETAILED3			
REVISIONS 1			
REVISIONS 2			
REVISIONS 3			
REVISIONS 4			
FIELD CHANGES			

SIGNATURE

P.E. NUMBER

DATE

PRINCETON BRIDGE
GRAND FALLS FLOWAGE
PRINCETON\PASSAMAQUODDY WASHINGTON COUNTY

ABUTMENT NO. 1 FOOTING

SHEET NUMBER

18

OF 33

Filename: ...\msta\018_Abutment1_FOOT1.dgn Division: BRIDGE Username: brian.j.nichols Date:3/7/2011

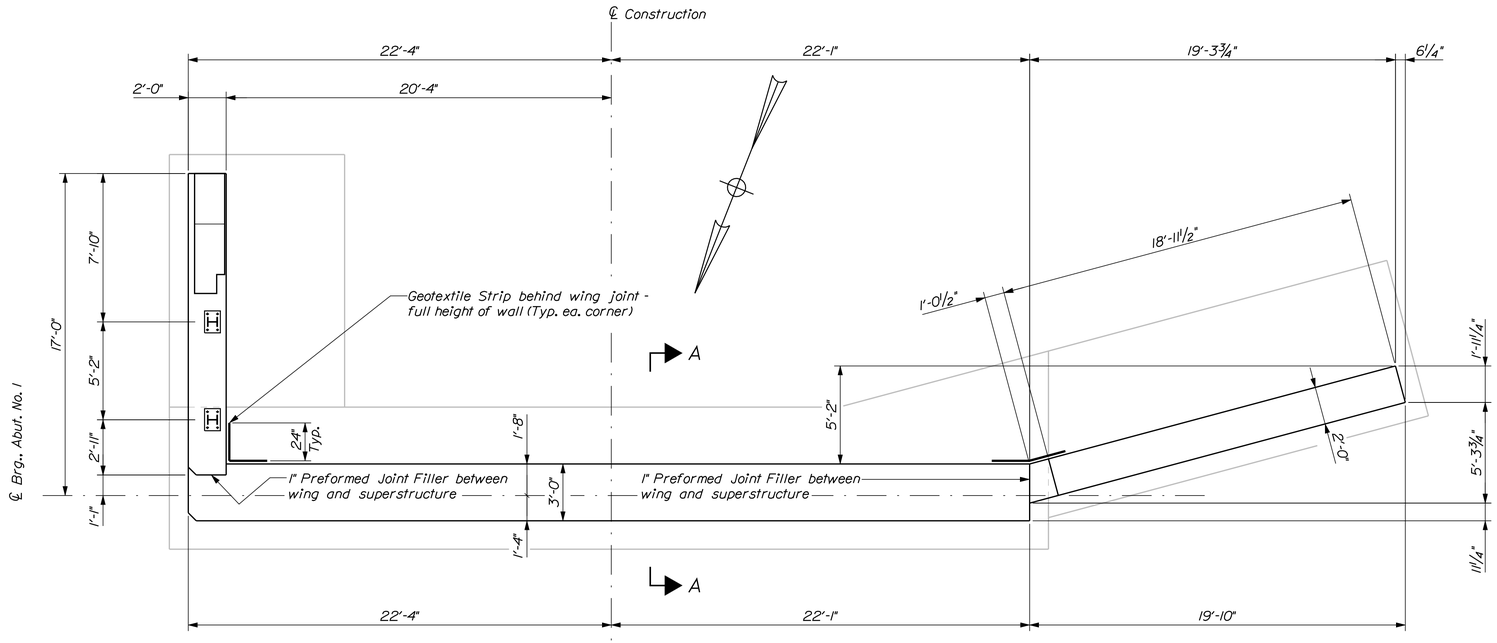

ABUTMENT NO. 1 PLAN

Flow

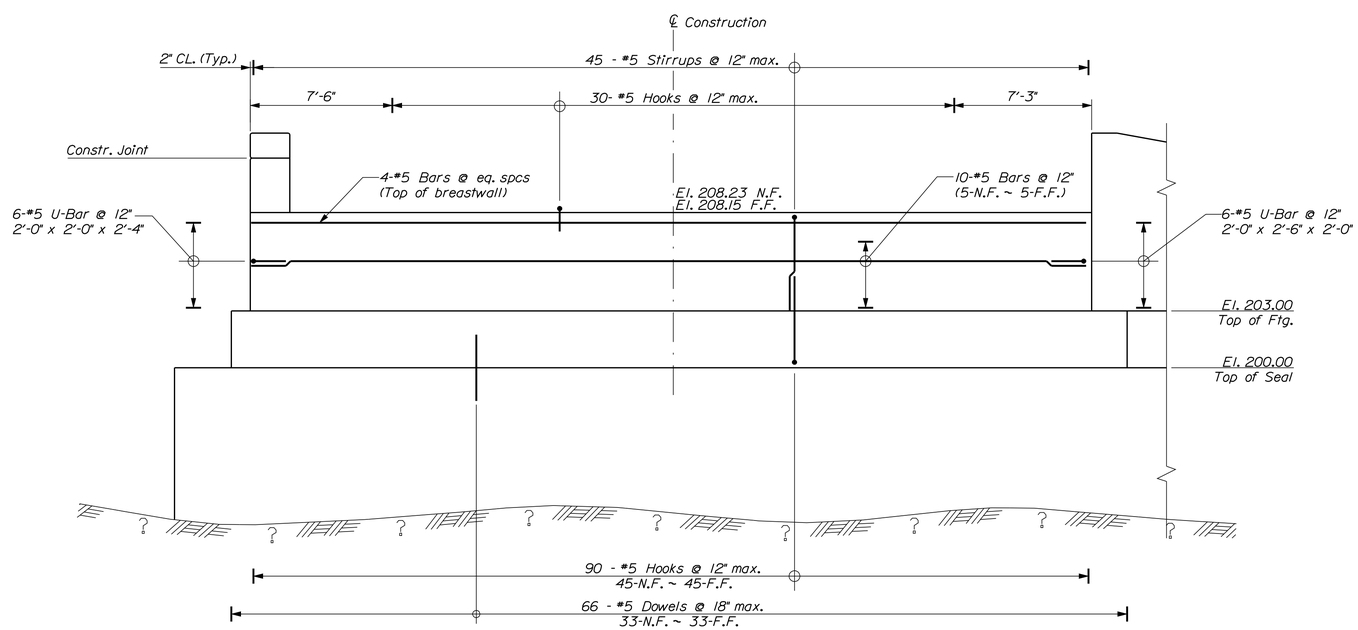

ABUTMENT NO. 1 ELEVATION

Flow

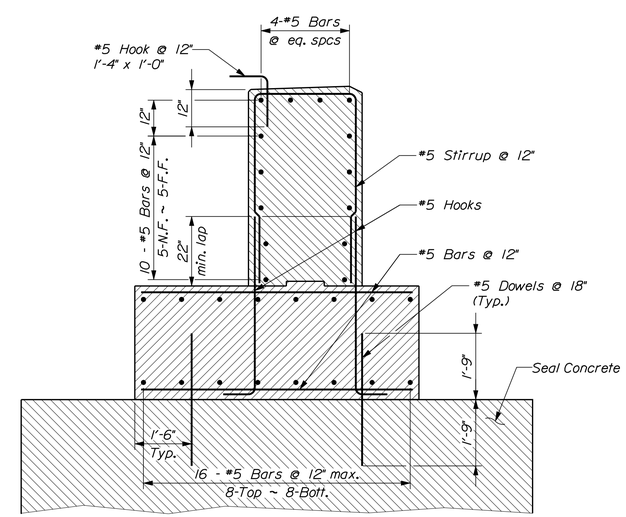

ABUTMENT SECTION "A-A"

STATE OF MAINE
DEPARTMENT OF TRANSPORTATION

AC-BH-1266(200)X

PIN 12662.00

BRIDGE NO. 2688

BRIDGE PLANS

PROJ. MANAGER	S. BOOGE	BY	DATE
DESIGN-DETAILED	B. REEVES	B. NICHOLS	FEB 2011
CHECKED-REVIEWED	E. CASWELL	D. SULLIVAN	------
DESIGN2-DETAILED2	------	------	------
DESIGN3-DETAILED3	------	------	------
REVISIONS 1	------	------	------
REVISIONS 2	------	------	------
REVISIONS 3	------	------	------
REVISIONS 4	------	------	------
FIELD CHANGES	------	------	------

SIGNATURE

P.E. NUMBER

DATE

PRINCETON BRIDGE
GRAND FALLS FLOWAGE
PRINCETON\PASSAMAQUODDY WASHINGTON COUNTY

ABUTMENT NO. 1

SHEET NUMBER

19

OF 33

Filename: ...\bridge\msto\019_Abutment1.dgn Division: BRIDGE Username: brian.j.nichols Date:3/7/2011

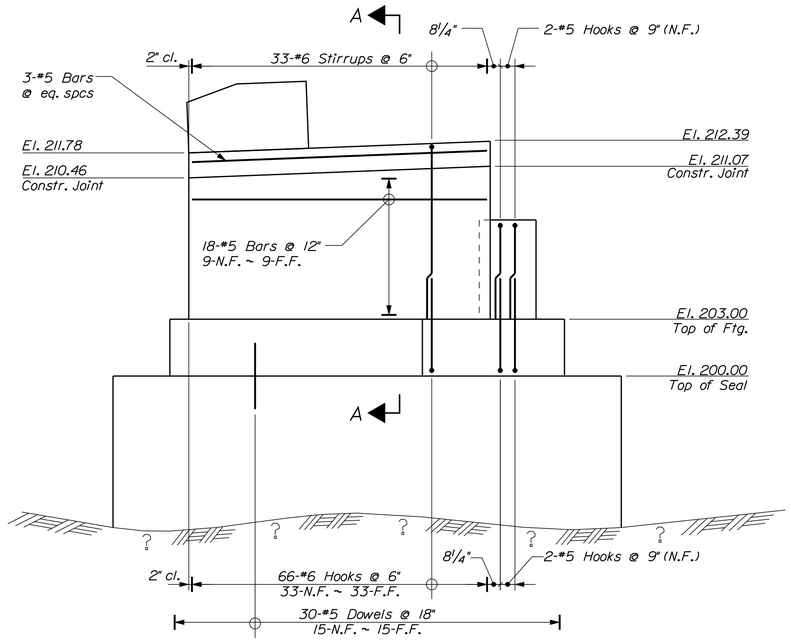

DOWNSTREAM WING ELEVATION

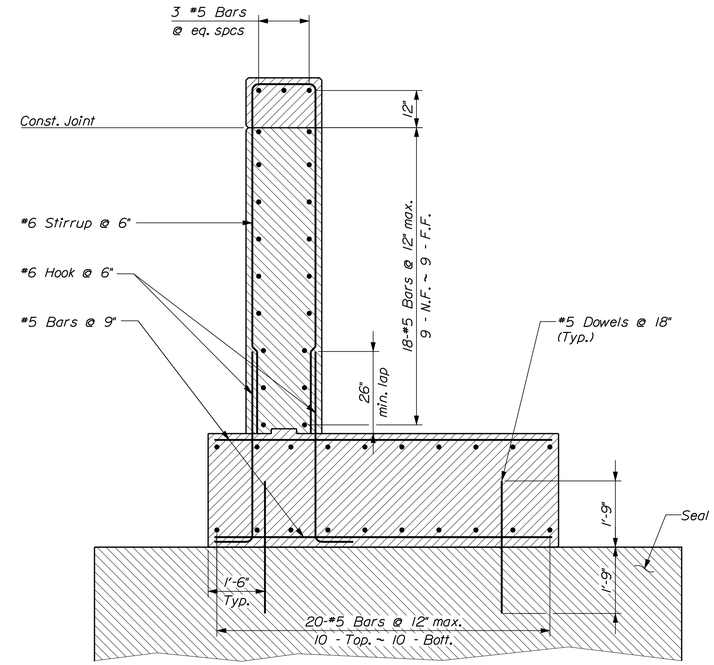

WINGWALL SECTION "A-A"

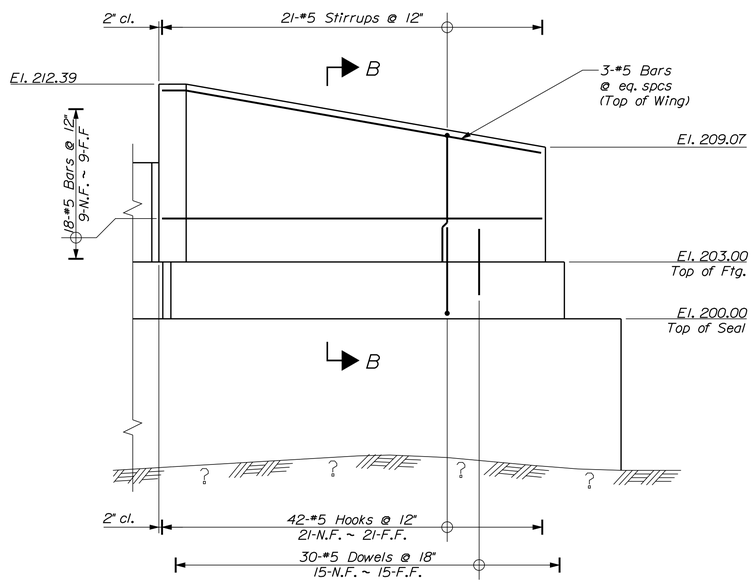

UPSTREAM WING ELEVATION

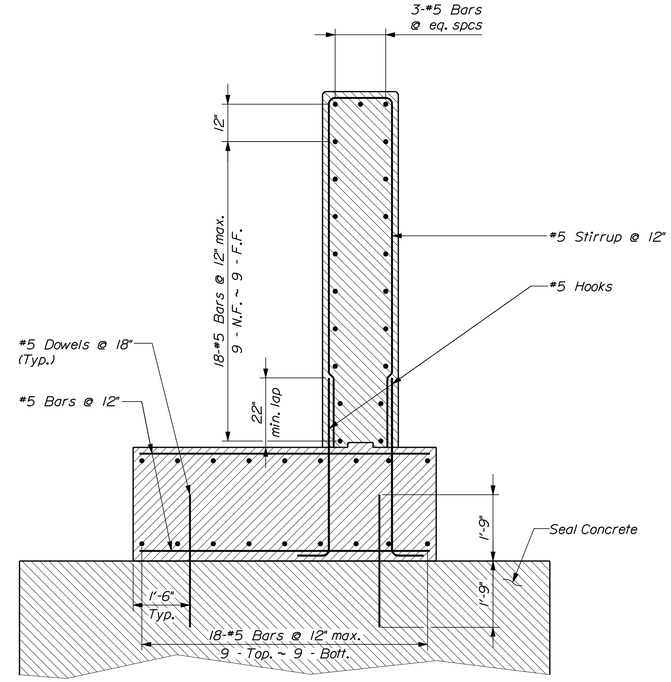

WINGWALL SECTION "B-B"

STATE OF MAINE
DEPARTMENT OF TRANSPORTATION

AC-BH-1266(200)X

PIN 12662.00

BRIDGE NO. 2688

BRIDGE PLANS

		BY	DATE
PROJ. MANAGER	S. BOOGE		
DESIGN-DETAILED	B. REEVES	B. NICHOLS	FEB 2011
CHECKED-REVIEWED	E. CASWELL	D. SULLIVAN	------
DESIGN2-DETAILED2	------	------	------
DESIGN3-DETAILED3	------	------	------
REVISIONS 1	------		------
REVISIONS 2	------		------
REVISIONS 3	------		------
REVISIONS 4	------		------
FIELD CHANGES	------		------

SIGNATURE

P.E. NUMBER

DATE

PRINCETON BRIDGE
GRAND FALLS FLOWAGE
PRINCETON\PASSAMAQUODDY WASHINGTON COUNTY

ABUTMENT NO. 1 WINGWALLS

SHEET NUMBER

20

OF 33

Filename: ...\msta\020_Abutment1_WING.dgn Division: BRIDGE Username: brian.j.nichols Date:3/7/2011

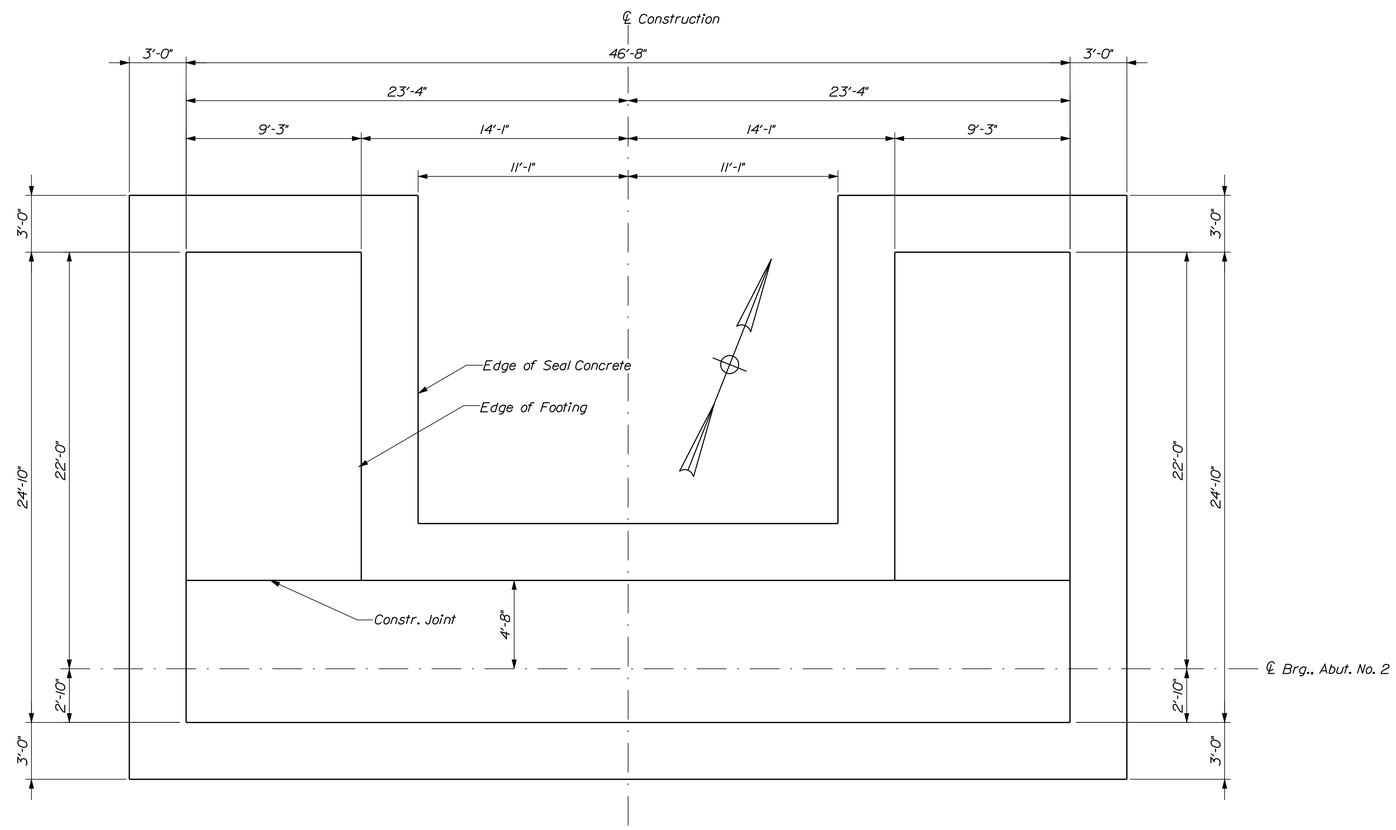

ABUTMENT NO. 2 FOOTING PLAN

Flow

STATE OF MAINE
DEPARTMENT OF TRANSPORTATION

AC-BH-1266(200)X

PIN 12662.00

BRIDGE NO. 2688

BRIDGE PLANS

PROJ. MANAGER	S. BODGE	BY	DATE
DESIGN-DETAILED	B. REEVES	B. NICHOLS	FEB 2011
CHECKED-REVIEWED	E. CASWELL	D. SULLIVAN	------
DESIGN2-DETAILED2	------	------	------
DESIGN3-DETAILED3	------	------	------
REVISIONS 1	------		------
REVISIONS 2	------		------
REVISIONS 3	------		------
REVISIONS 4	------		------
FIELD CHANGES	------		------

SIGNATURE

P.E. NUMBER

DATE

PRINCETON BRIDGE
GRAND FALLS FLOWAGE
PRINCETON\PASSAMAQUODDY WASHINGTON COUNTY

ABUTMENT NO. 2 FOOTING PLAN

SHEET NUMBER

21

OF 33

Filename: ...\msto\021_Abutment2_FOOT1.dgn Division: BRIDGE Username: brian.j.nichols Date:3/7/2011

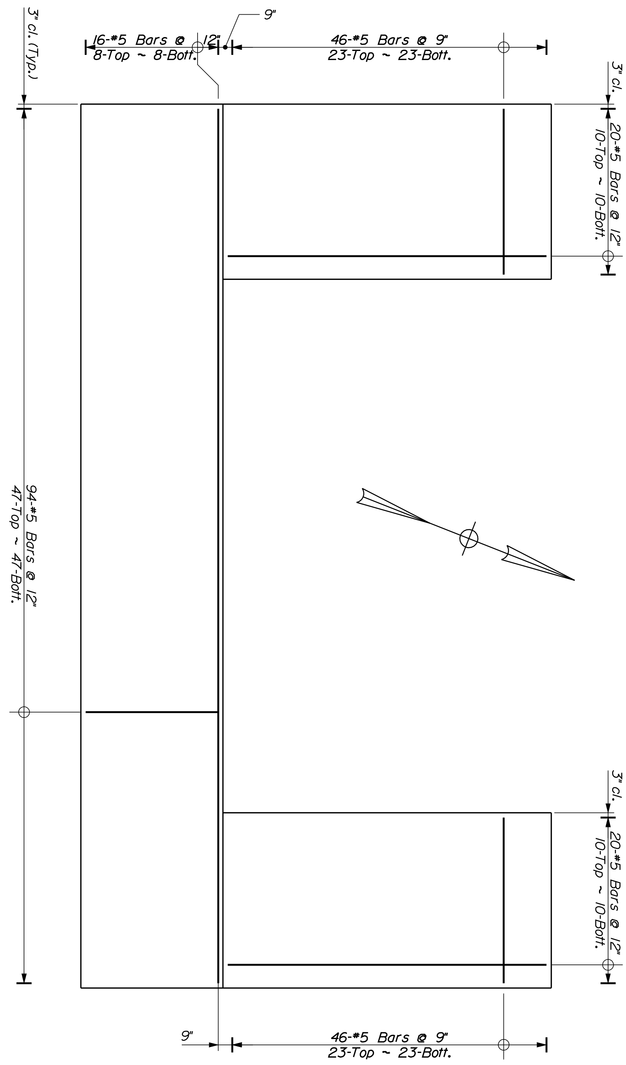

ABUTMENT NO. 2 FOOTING REINFORCING PLAN

PROJ. MANAGER	S. BODGE	BY	DATE	
DESIGN-DETAILED	B. REEVES	B. NICHOLS	FEB 2011	
CHECKED-REVIEWED	E. CASWELL	D. SULLIVAN	_____	SIGNATURE
DESIGN2-DETAILED2	_____	_____	_____	
DESIGN3-DETAILED3	_____	_____	_____	P.E. NUMBER
REVISIONS 1	_____		_____	
REVISIONS 2	_____		_____	
REVISIONS 3	_____		_____	DATE
REVISIONS 4	_____		_____	
FIELD CHANGES	_____		_____	

PRINCETON BRIDGE
GRAND FALLS FLOWAGE
PRINCETON\PASSAMAQUODDY WASHINGTON COUNTY

ABUTMENT NO. 2
FOOTING REINFORCING

STATE OF MAINE
DEPARTMENT OF TRANSPORTATION

AC-BH-1266(200)X

PIN 12662.00

BRIDGE NO. 2688 BRIDGE PLANS

SHEET NUMBER 22 OF 33

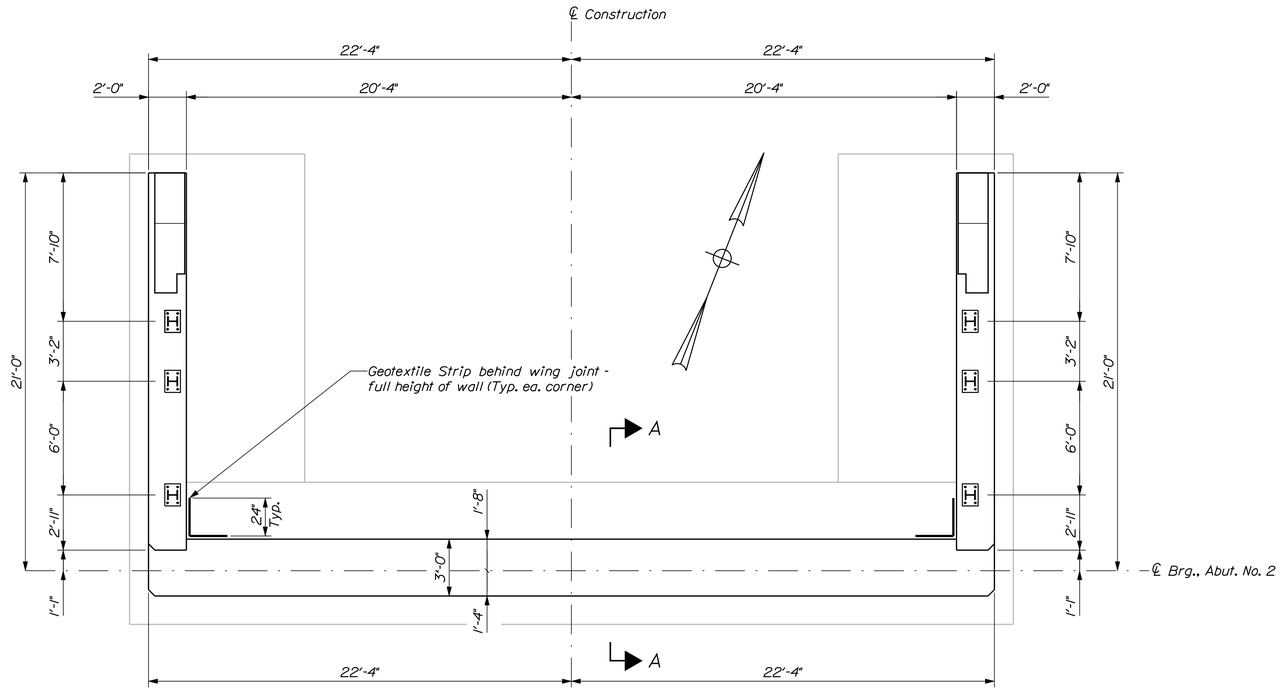

ABUTMENT NO. 2 PLAN

Flow

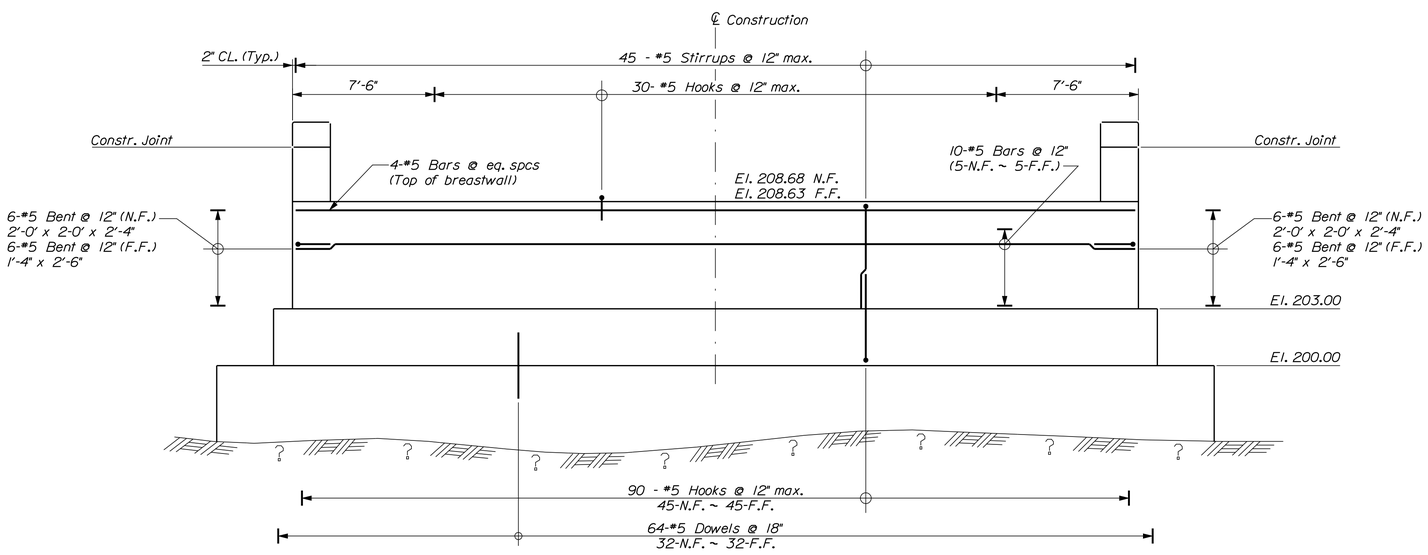

ABUTMENT NO. 2 ELEVATION

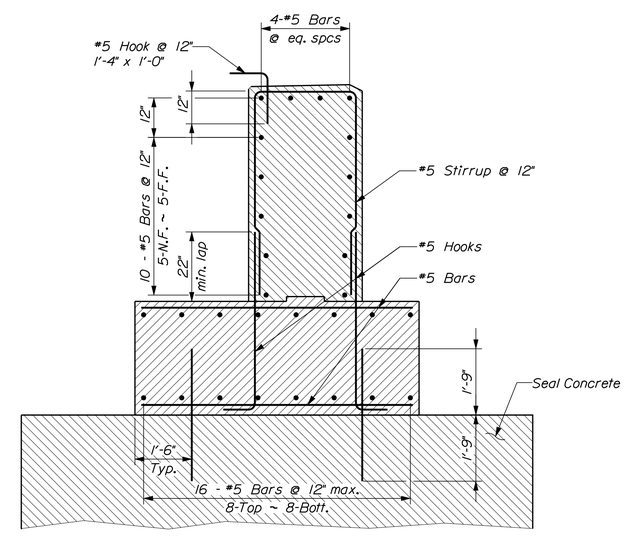

ABUTMENT SECTION "A-A"

STATE OF MAINE
DEPARTMENT OF TRANSPORTATION

AC-BH-1266(200)X

PIN 12662.00

BRIDGE NO. 2688

BRIDGE PLANS

PROJ. MANAGER	S. BOOGE	BY	DATE
DESIGN-DETAILED	B. REEVES	B. NICHOLS	FEB 2011
CHECKED-REVIEWED	E. CASWELL	D. SULLIVAN	------
DESIGN2-DETAILED2	------	------	------
DESIGN3-DETAILED3	------	------	------
REVISIONS 1	------	------	------
REVISIONS 2	------	------	------
REVISIONS 3	------	------	------
REVISIONS 4	------	------	------
FIELD CHANGES	------	------	------

SIGNATURE

P.E. NUMBER

DATE

PRINCETON BRIDGE
GRAND FALLS FLOWAGE
PRINCETON\PASSAMAQUODDY WASHINGTON COUNTY

ABUTMENT NO. 2

SHEET NUMBER

23

OF 33

Filename: ...\bridge\msto\023_Abutment2.dgn Division: BRIDGE Username: brian.j.nichols Date:3/7/2011

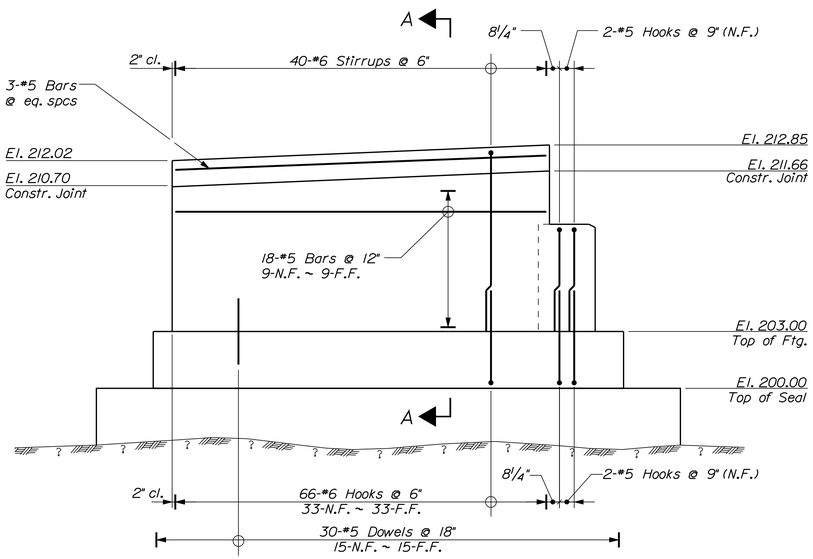

UPSTREAM WING ELEVATION

Upstream Wall Shown - Downstream Wall Opposite Hand

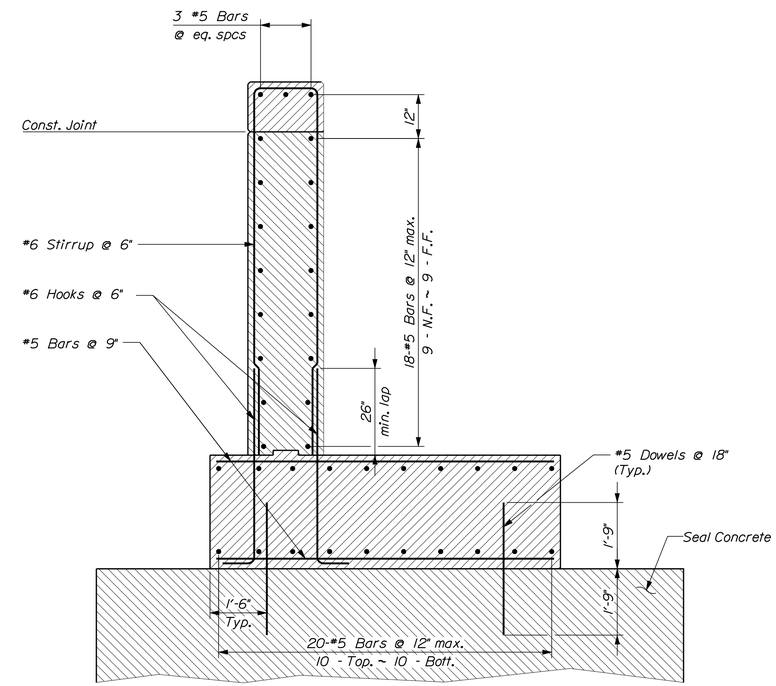

WINGWALL SECTION "A-A"

STATE OF MAINE
DEPARTMENT OF TRANSPORTATION

AC-BH-1266(200)X

PIN 12662.00

BRIDGE NO. 2688

BRIDGE PLANS

		BY	DATE
PROJ. MANAGER	S. BODGE		
DESIGN-DETAILED	B. REEVES	B. NICHOLS	FEB 2011
CHECKED-REVIEWED	E. CASWELL	D. SULLIVAN	
DESIGN2-DETAILED2			
DESIGN3-DETAILED3			
REVISIONS 1			
REVISIONS 2			
REVISIONS 3			
REVISIONS 4			
FIELD CHANGES			

SIGNATURE

P.E. NUMBER

DATE

PRINCETON BRIDGE
GRAND FALLS FLOWAGE
PRINCETON\PASSAMAQUODDY WASHINGTON COUNTY

ABUTMENT NO. 2 WINGWALLS

SHEET NUMBER

24

OF 33

Filename: ...\msta\024_Abutment2_WING.dgn Division: BRIDGE Username: brian.j.nichols Date:3/7/2011

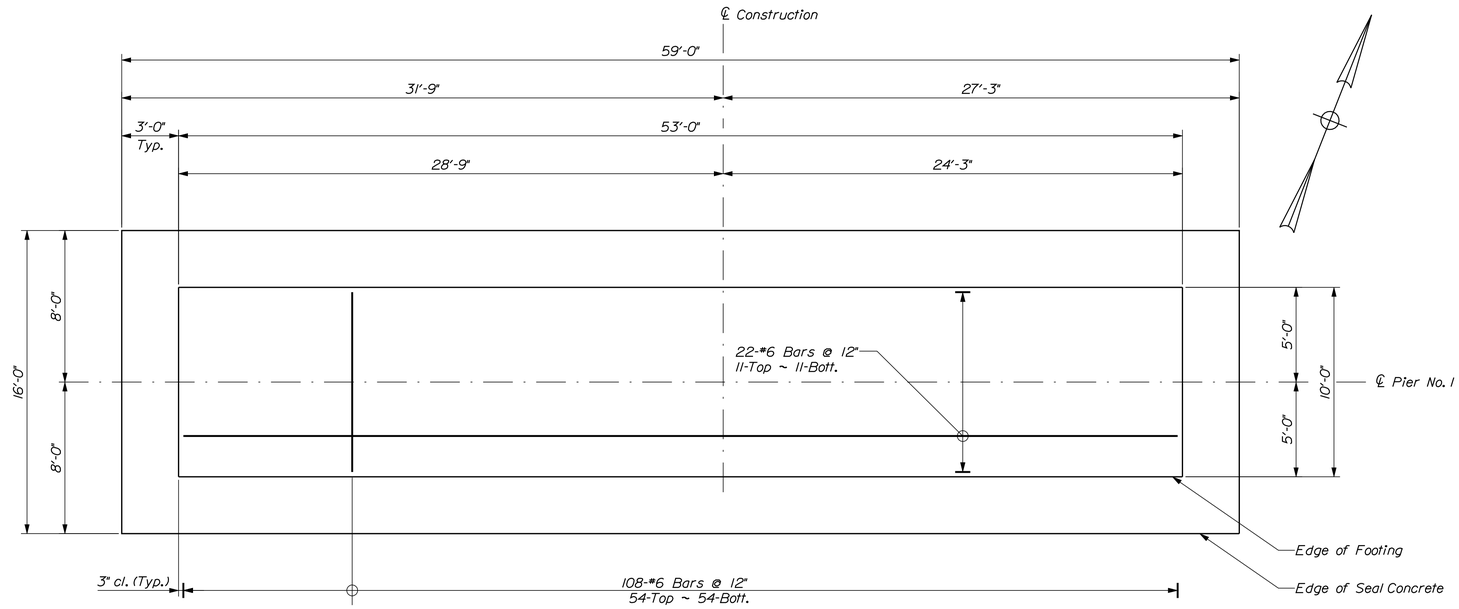

PIER FOOTING PLAN

Flow

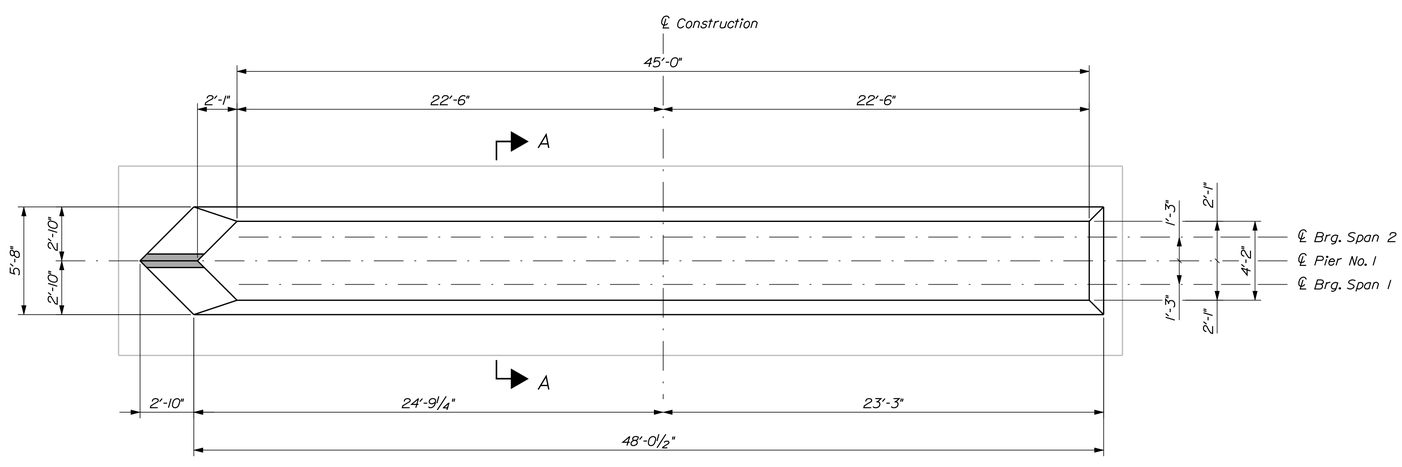

PIER PLAN

Flow

SEAL COFFERDAM NOTES

1. The bottom of the seal concrete shall be at minimum El. 192.00. Any bedrock that protrudes above this elevation shall be removed. Payment for rock removal will be made under pay item 206.11 Structural Rock Excavation-Pier.

2. Pier seal concrete shall be placed on bedrock cleaned of all weathered rock, loose fractured rock, boulders and soil. Where the bedrock surface slope exceeds 4H:1V, the bedrock surface shall be benched in level steps or made completely level. Cofferdam excavation inspection shall be the responsibility of the Contractor and shall be conducted in accordance with Special Provision 511 - Cofferdams. An inspection report shall be submitted to the Resident for review. The report shall include bedrock elevation measurements and observations which conclusively assess the levelness, cleanliness, and sediment thickness. Sediment measurements and bedrock elevation measurements will be taken at a minimum of 20 locations evenly distributed on a regular grid pattern.

3. When sheet piling is used for seal cofferdams, appropriate rolled corners shall be used, and the inside face of the sheet piling shall be at or outside of the seal concrete dimensions shown.

4. The seal concrete placement dimensions shown represent the minimum seal size necessary to meet design requirements and are not based on the use of any particular sheet pile section.

5. The horizontal pay limit for seal concrete will be to the dimensions shown on the plans. No additional payment will be made for concrete placed outside these limits.

6. The depth of the seal is set for a water elevation of 203.50±. The cofferdam shall be designed to flood or overtop at an elevation of 203.50±.

7. The method of placing dowels in the seal concrete shall be approved by the Resident.

PIER NOTES

1. The maximum factored applied footing pressure is 8.87 ksf.

2. Reinforcing steel shall have a minimum concrete cover of 3 inches unless otherwise noted.

3. Payment for Nose Armor, including fabrication, galvanization, and installation shall be considered incidental to Item No. 502.239, Structural Concrete -Piers.

PIER DESIGN CRITERIA

1. Critical AASHTO Load Combination - Strength I Limit State.

2. Buoyancy:
   A. Water level assumed at EL. 203.22. (Headwater El. @ Q1.1)

   B. Water level assumed at EL. 204.96. (Headwater El. @ Q50)

3. Stream flow:
   A. Velocity of 1.30 fps (Discharge Velocity @ Q1.1) skewed at 0° to longitudinal centerline of pier.

   B. Velocity of 3.03 fps (Discharge Velocity @ Q50) skewed at 0° to longitudinal centerline of pier.

4. Wind: 100 mph

5. Ice:
   A. Strength Limit States
      A.1. Thickness of 1.5 ft, pressure 28.8 KSF at El. 203.22 (Headwater Elevation @ Q1.1), 30% of Nose Force applied tranvserse to pier.

      A.2.. Thickness of 1.5 ft, pressure 14.4 KSF at El. 204.96 (Headwater Elevation @ Q50), 30% of Nose Force applied tranvserse to pier.

   B. Extreme Limit States
      B.1. Thickness of 2.5 ft, pressure 28.8 KSF at El. 203.22 (Headwater Elevation @ Q1.1), 30% of Nose Force applied tranvserse to pier.

      B.2.. Thickness of 2.5 ft, pressure 14.4 KSF at El. 204.96 (Headwater Elevation @ Q50), 30% of Nose Force applied tranvserse to pier.

STATE OF MAINE
DEPARTMENT OF TRANSPORTATION

AC-BH-1266(200)X

PIN 12662.00

BRIDGE NO. 2688

BRIDGE PLANS

PROJ. MANAGER	S. BOOGE	BY	DATE
DESIGN-DETAILED	ERD/ANT	B. NICHOLS	FEB 2011
CHECKED-REVIEWED			
DESIGN2-DETAILED2			
DESIGN3-DETAILED3			
REVISIONS 1			
REVISIONS 2			
REVISIONS 3			
REVISIONS 4			
FIELD CHANGES			

SIGNATURE

P.E. NUMBER

DATE

PRINCETON BRIDGE
GRAND FALLS FLOWAGE
PRINCETON\PASSAMAQUODDY WASHINGTON COUNTY

PIER PLAN

SHEET NUMBER

25

OF 33

Filename: ...\bridge\msta\025_Pier_PLN.dgn Division: BRIDGE Username: brian.j.nichols Date:3/7/2011

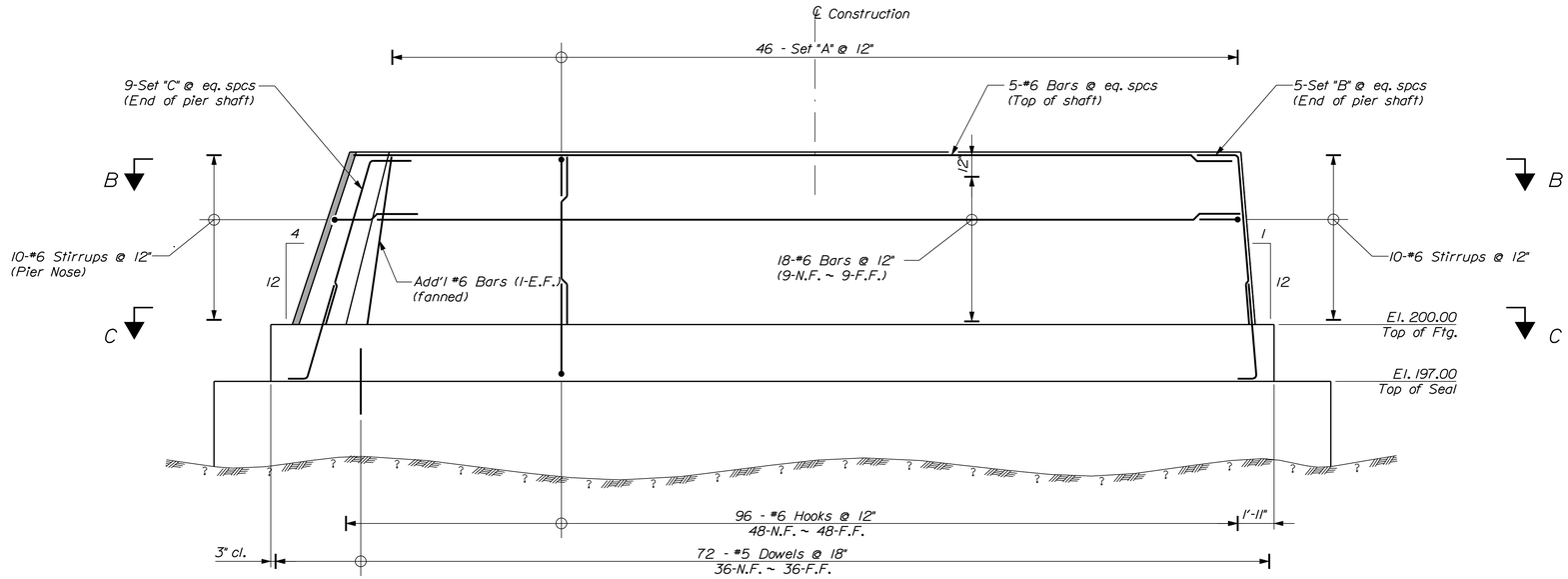

PIER ELEVATION

Flow →

Set "A" = 1-#6 Stirrup (Top of shaft), 2-#6 Bars (1-E.F.)
Set "B" = 1-#6 Hook - 1'-0" x 5'-2" (Ftg), 1-#6 Hook - 2'-2" x 8'-10" (Shaft)
Set "C" = 1-#6 Hook - 1'-0" x 5'-2" (Ftg), 1-#6 Hook - 2'-2" x 8'-10" (Shaft)

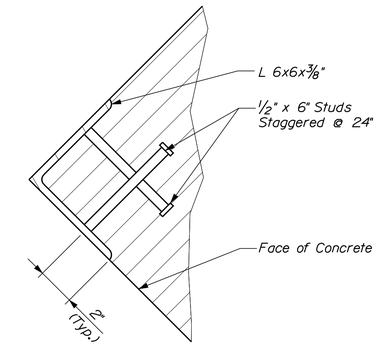

NOSE ARMOR DETAIL

Nose Armor shall be galvanized in accordance with ASTM A123 following fabrication.

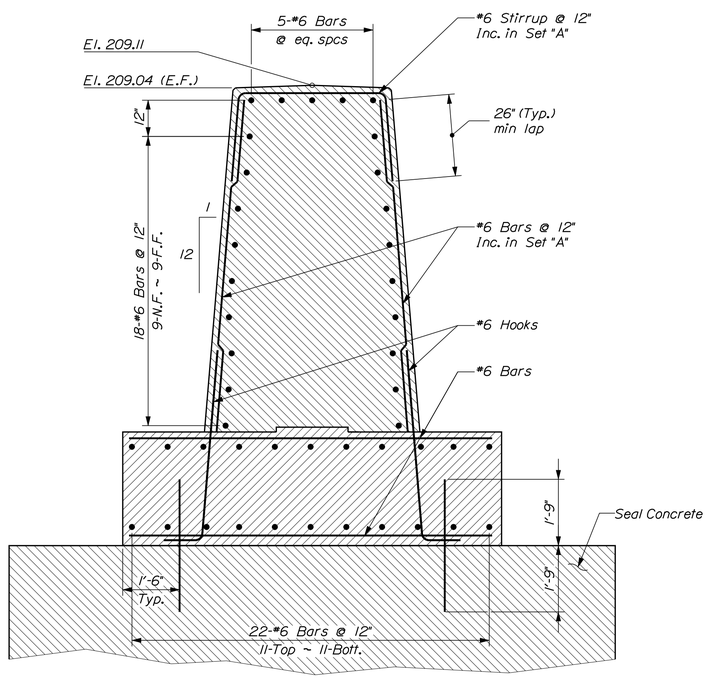

PIER SECTION "A-A"

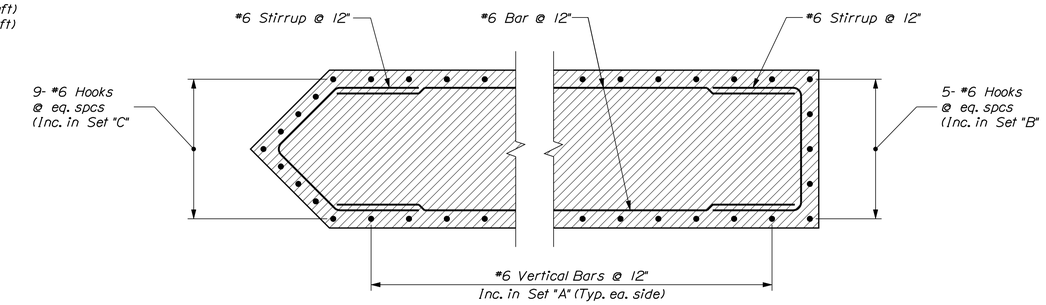

PIER SECT "B-B"

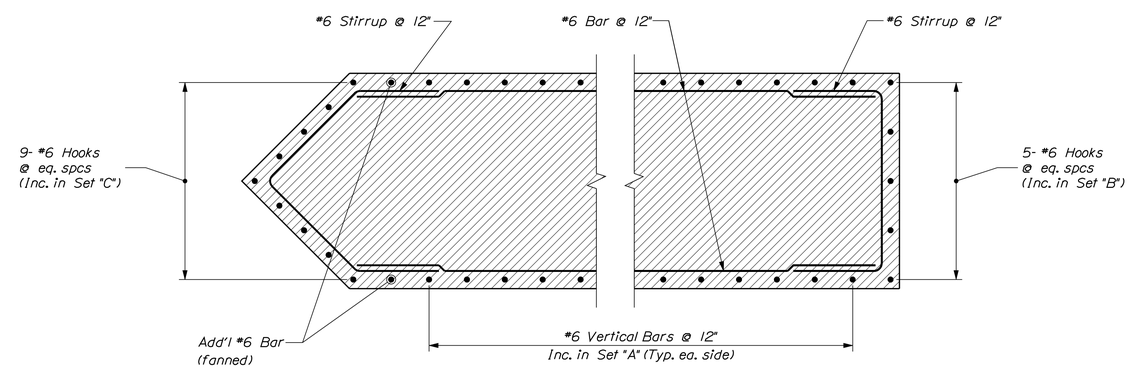

PIER SECT "C-C"

STATE OF MAINE
DEPARTMENT OF TRANSPORTATION

AC-BH-1266(200)X

PIN 12662.00

BRIDGE NO. 2688

BRIDGE PLANS

PROJ. MANAGER	S. BODGE	BY	DATE
DESIGN-DETAILED	ERD/ANT	B. NICHOLS	FEB 2011
CHECKED-REVIEWED	E. CASWELL	D. SULLIVAN	
DESIGN2-DETAILED2			
DESIGN3-DETAILED3			
REVISIONS 1			
REVISIONS 2			
REVISIONS 3			
REVISIONS 4			
FIELD CHANGES			

SIGNATURE

P.E. NUMBER

DATE

PRINCETON BRIDGE
GRAND FALLS FLOWAGE
PRINCETON\PASSAMAQUODDY WASHINGTON COUNTY

PIER DETAILS

SHEET NUMBER

26

OF 33

Filename: ...\bridge\msta\026_Pier_DET.dgn Division: BRIDGE Username: brian.j.nichols Date:3/7/2011

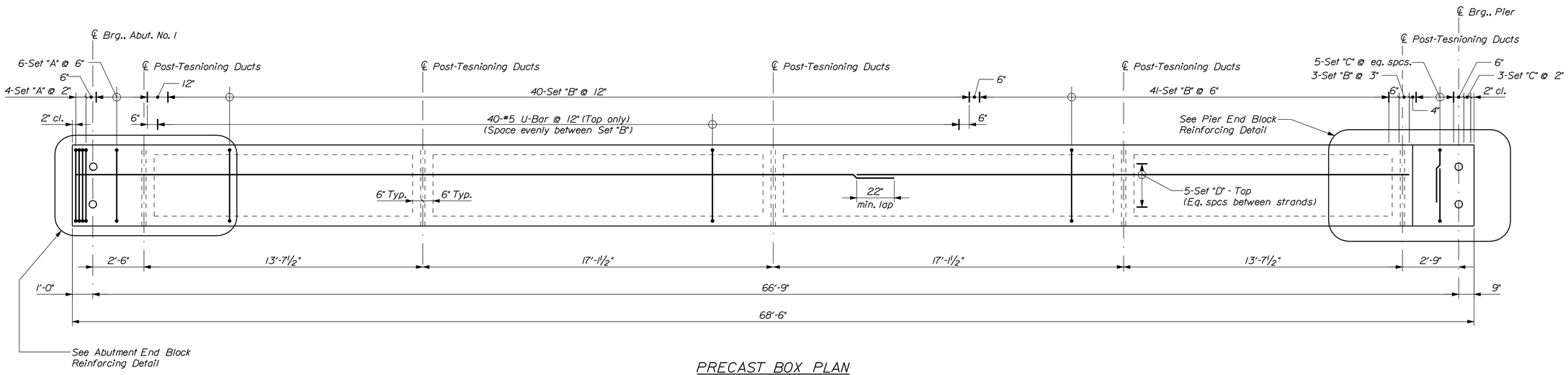

PRECAST BOX PLAN

Span No.1 Shown - Span No. 2 - Rotated 180°
Set "A" = #4 U-bar-Top, #4 U-bar-Bott.
Set "B" = #5 U-bar-Top, #4 U-bar-Bott.
Set "C" = #5 U-Bar-Left, #5 U-Bar-Right
Set "D" = 2-#5 Bars

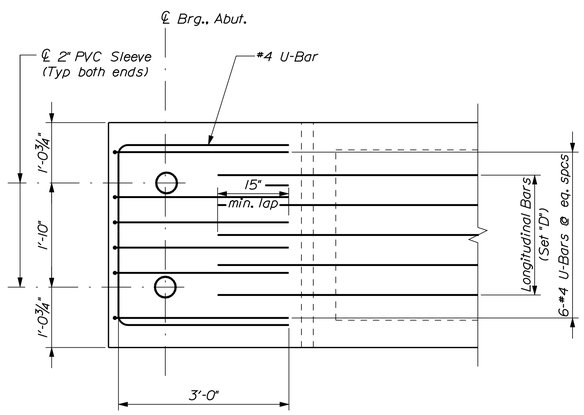

ABUTMENT END BLOCK REINFORCING DETAIL

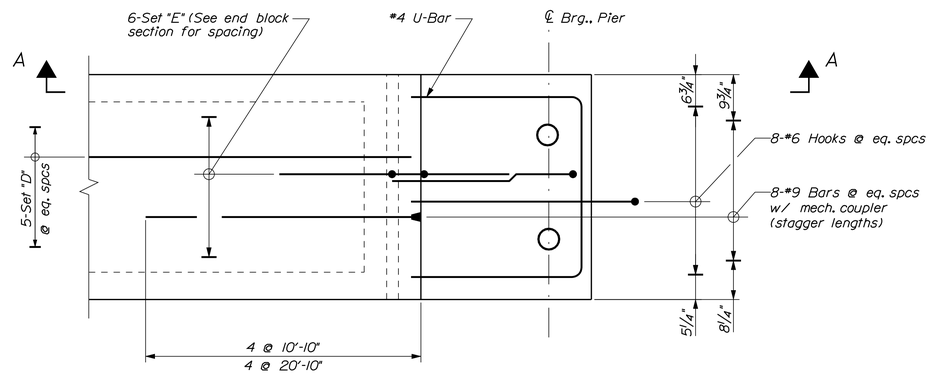

PIER END BLOCK REINFORCING DETAIL

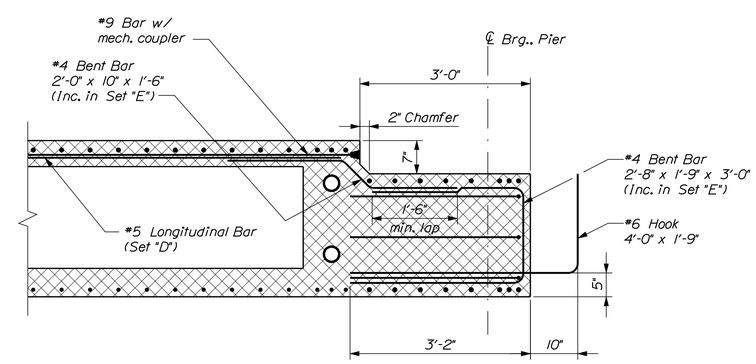

SECTION "A-A"

The fabricator may replace the two bars in Set "E" with a single bar to eliminate lap splice

PRECAST CONCRETE SUPERSTRUCTURE NOTES

1. Reinforcing steel shall have a minimum concrete cover of 2 inches unless otherwise noted.

2. Install a 1-in. diameter nonmetallic void drain in the bottom of each void at both ends.

3. The top surface of the upper flange of the prestressed beams shall be raked to a surface roughness of ±¼ inch, except at locations corresponding to the blocking points. At these locations a flattened area of sufficient size shall be finished to facilitate taking elevations for setting bottom of slab elevations.

4. The drilling of holes in the prestressed beams and the use of power actuated tools on the beams will not be permitted.

5. Neoprene pads shall 1.5 in. thick and shall be either polychloroprene or natural polyisoprene of 50±5 Shore A durometer hardness, and shall conform to the requirements of Division 2, Section 18.2 of AASHTO Standard Specifications for Highway Bridges. Neoprene pads will not be paid for directly but will be considered incidental to related contract items.

6. Post tensioning shall be covered by a seamless polypropylene sheath, with corrosion inhibiting grease between the strands and sheath, for the full length of the strand except at the anchorage location.

7. The Contractor shall calibrate the jacking equipment as necessary to provide an anchorage of 38 to 41 kips after setting losses in each 0.6-in. diameter post tensioning strand.

8. Screed rails shall be installed to the elevation shown on the profile, adjusted for wearing course thickness and cross slope.

9. Camber shall be 1¼" at midpoint.

STATE OF MAINE
DEPARTMENT OF TRANSPORTATION

AC-BH-1266(200)X

PIN 12662.00

BRIDGE NO. 2688

BRIDGE PLANS

	BY	DATE
PROJ. MANAGER	S. BODGE	
DESIGN-DETAILED	B. REEVES	B. NICHOLS	FEB 2011
CHECKED-REVIEWED	E. CASWELL	D. SULLIVAN	
DESIGN2-DETAILED2			
DESIGN3-DETAILED3			
REVISIONS: 1			
REVISIONS: 2			
REVISIONS: 3			
REVISIONS: 4			
FIELD CHANGES			

SIGNATURE

P.E. NUMBER

DATE

PRINCETON BRIDGE
GRAND FALLS FLOWAGE
PRINCETON\PASSAMAQUODDY WASHINGTON COUNTY

PRECAST CONCRETE
BOX BEAMS

SHEET NUMBER
27
OF 33

Filename: ...\BRIDGE\MSTA\027_Precast_1.dgn Division: BRIDGE Username: brian.j.nichols Date:3/7/2011

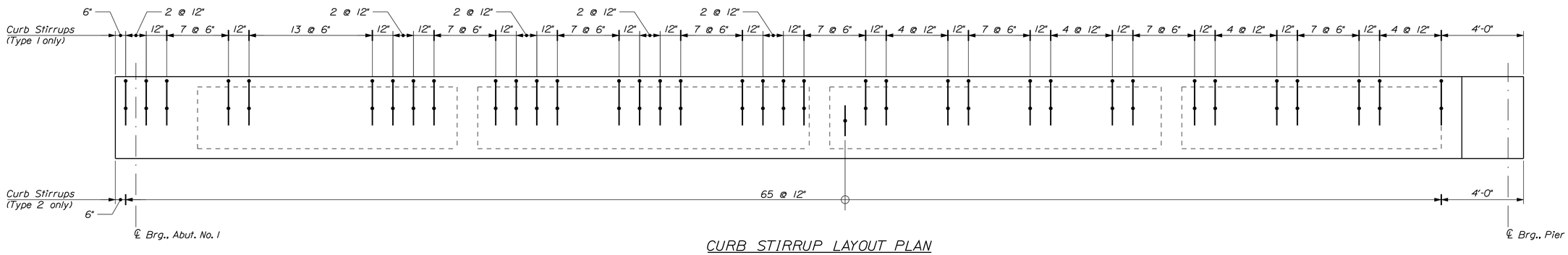

CURB STIRRUP LAYOUT PLAN

Types 1 & 2 - Span 1

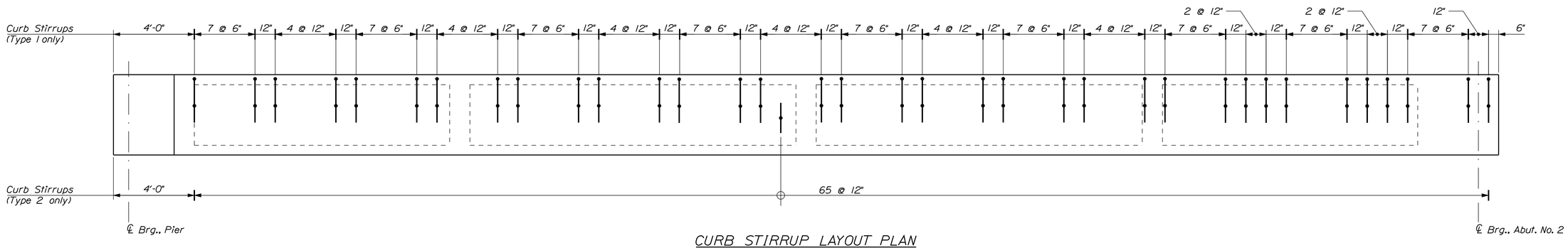

CURB STIRRUP LAYOUT PLAN

Types 1 & 2 - Span 2

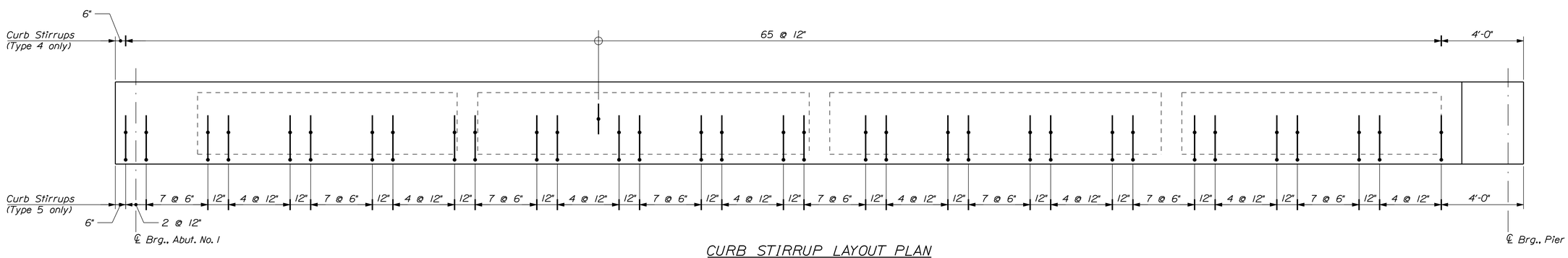

CURB STIRRUP LAYOUT PLAN

Types 4 & 5 - Span 1

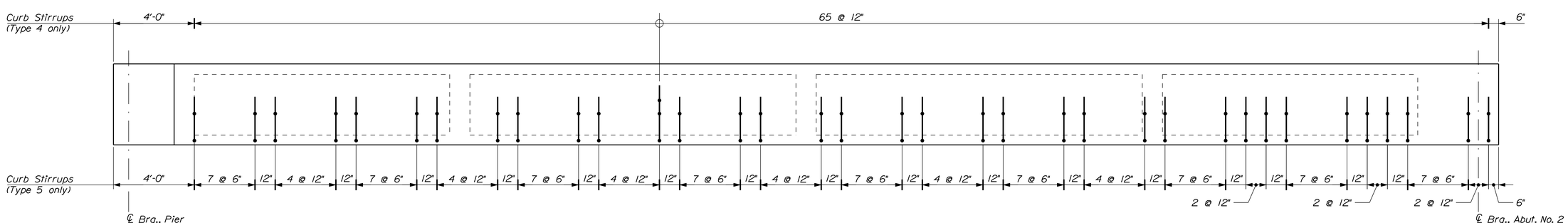

CURB STIRRUP LAYOUT PLAN

Types 4 & 5 - Span 2

STATE OF MAINE
DEPARTMENT OF TRANSPORTATION

AC-BH-1266(200)X

PIN 12662.00

BRIDGE NO. 2688

BRIDGE PLANS

PROJ. MANAGER	S. BOOGE	BY	DATE	
DESIGN-DETAILED	B. REEVES	B. NICHOLS	FEB 2011	SIGNATURE
CHECKED-REVIEWED	E. CASWELL	D. SULLIVAN	------	
DESIGN2-DETAILED2	------	------	------	P.E. NUMBER
DESIGN3-DETAILED3	------	------	------	
REVISIONS 1	------	------	------	DATE
REVISIONS 2	------	------	------	
REVISIONS 3	------	------	------	
REVISIONS 4	------	------	------	
FIELD CHANGES	------	------	------	

PRINCETON BRIDGE
GRAND FALLS FLOWAGE
PRINCETON\PASSAMAQUODDY WASHINGTON COUNTY

PRECAST BOX CURB STIRRUP PLACEMENT PLAN

SHEET NUMBER

28

OF 33

Filename: ...\bridge\msta\028_Precast_2.dgn Division: BRIDGE Username: brian.j.nichols Date:3/7/2011

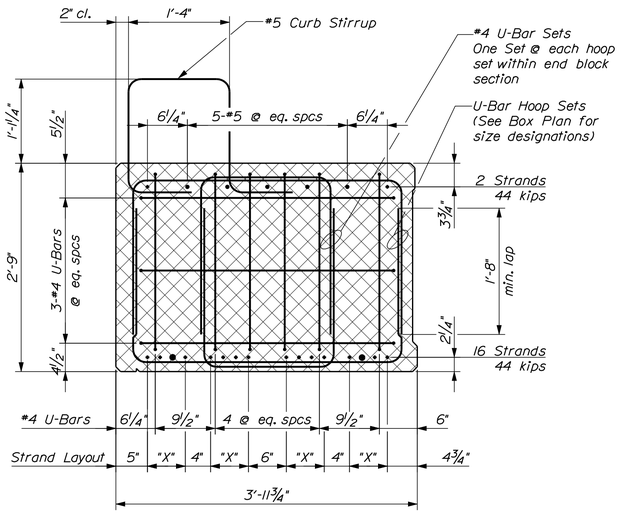

TYPICAL EXTERIOR BOX BEAM SECTION

~SECTION THROUGH ABUTMENT END BLOCK~
~Type "1" Shown - Type "5" Opposite Hand~
+ = 0.6" dia. strand - fully bonded
⊕ = 0.6" dia. strand - debonded 5'
"X" = 4 Strands @ 2"

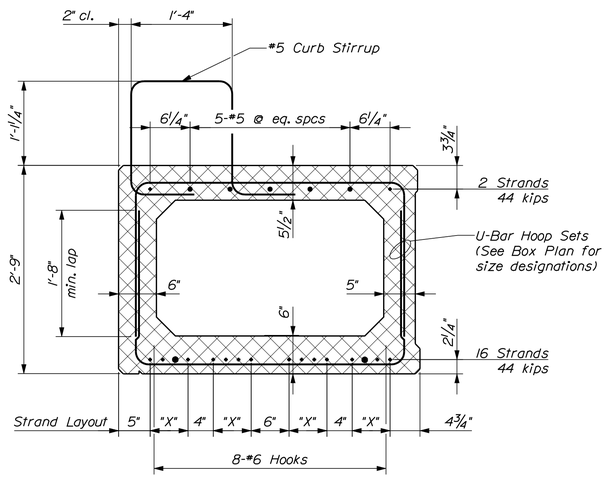

TYPICAL EXTERIOR BOX BEAM SECTION

~SECTION THROUGH VOID~
~Type "1" Shown - Type "5" Opposite Hand~
+ = 0.6" dia. strand - fully bonded
⊕ = 0.6" dia. strand - debonded 5'
"X" = 4 Strands @ 2"

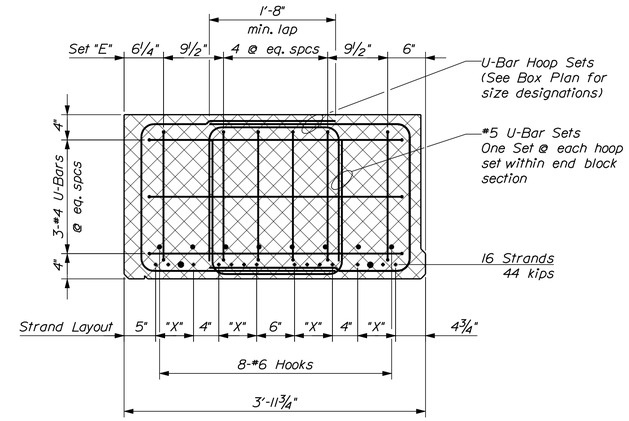

TYPICAL EXTERIOR BOX BEAM SECTION

~SECTION THROUGH PIER END BLOCK~
~Type "1" Shown - Type "5" Opposite Hand~
+ = 0.6" dia. strand - fully bonded
⊕ = 0.6" dia. strand - debonded 5'
"X" = 4 Strands @ 2"

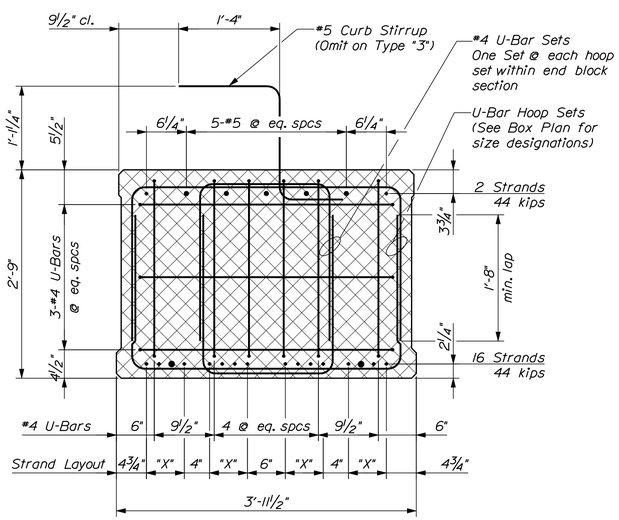

TYPICAL INTERIOR BOX BEAM SECTION

~SECTION THROUGH ABUTMENT END BLOCK~
~Type "2" Shown - Type "3" Similar - Type "4" Opposite Hand~
+ = 0.6" dia. strand - fully bonded
⊕ = 0.6" dia. strand - debonded 5'
"X" = 4 Strands @ 2"

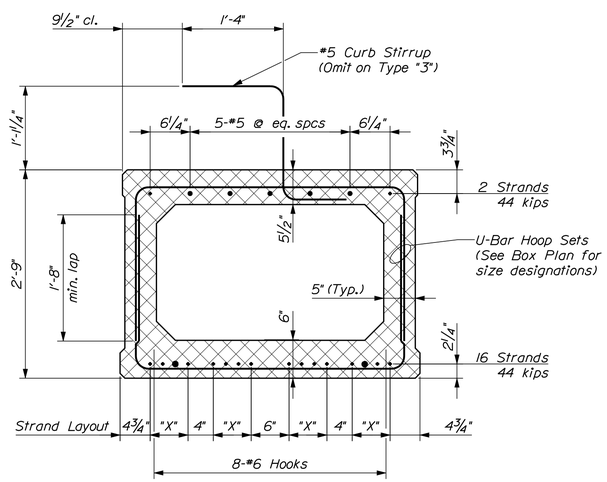

TYPICAL INTERIOR BOX BEAM SECTION

~SECTION THROUGH VOID~
~Type "2" Shown - Type "3" Similar - Type "4" Opposite Hand~
+ = 0.6" dia. strand - fully bonded
⊕ = 0.6" dia. strand - debonded 5'
"X" = 4 Strands @ 2"

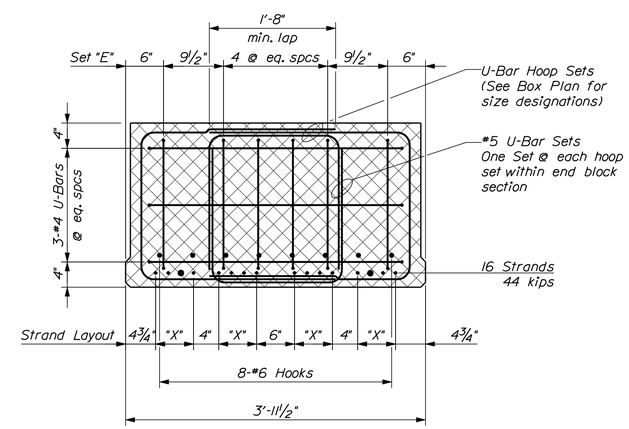

TYPICAL INTERIOR BOX BEAM SECTION

~SECTION THROUGH PIER END BLOCK~
~Type "2" Shown - Type "3" Similar - Type "4" Opposite Hand~
+ = 0.6" dia. strand - fully bonded
⊕ = 0.6" dia. strand - debonded 5'
"X" = 4 Strands @ 2"

STATE OF MAINE
DEPARTMENT OF TRANSPORTATION

AC-BH-1266(200)X

PIN 12662.00

BRIDGE NO. 2688

BRIDGE PLANS

PROJ. MANAGER	S. BOOGE	BY	DATE
DESIGN-DETAILED	B. REEVES	B. NICHOLS	FEB 2011
CHECKED-REVIEWED	E. CASWELL	D. SULLIVAN	
DESIGN2-DETAILED2			
DESIGN3-DETAILED3			
REVISIONS 1			
REVISIONS 2			
REVISIONS 3			
REVISIONS 4			
FIELD CHANGES			

SIGNATURE

P.E. NUMBER

DATE

PRINCETON BRIDGE
GRAND FALLS FLOWAGE
PRINCETON\PASSAMAQUODDY WASHINGTON COUNTY

PRECAST BOX BEAM SECTIONS

SHEET NUMBER
29
OF 33

Filename: ...\bridge\msta\029_Precast_3.dgn Division: BRIDGE Username: brian.j.nichols Date:3/7/2011

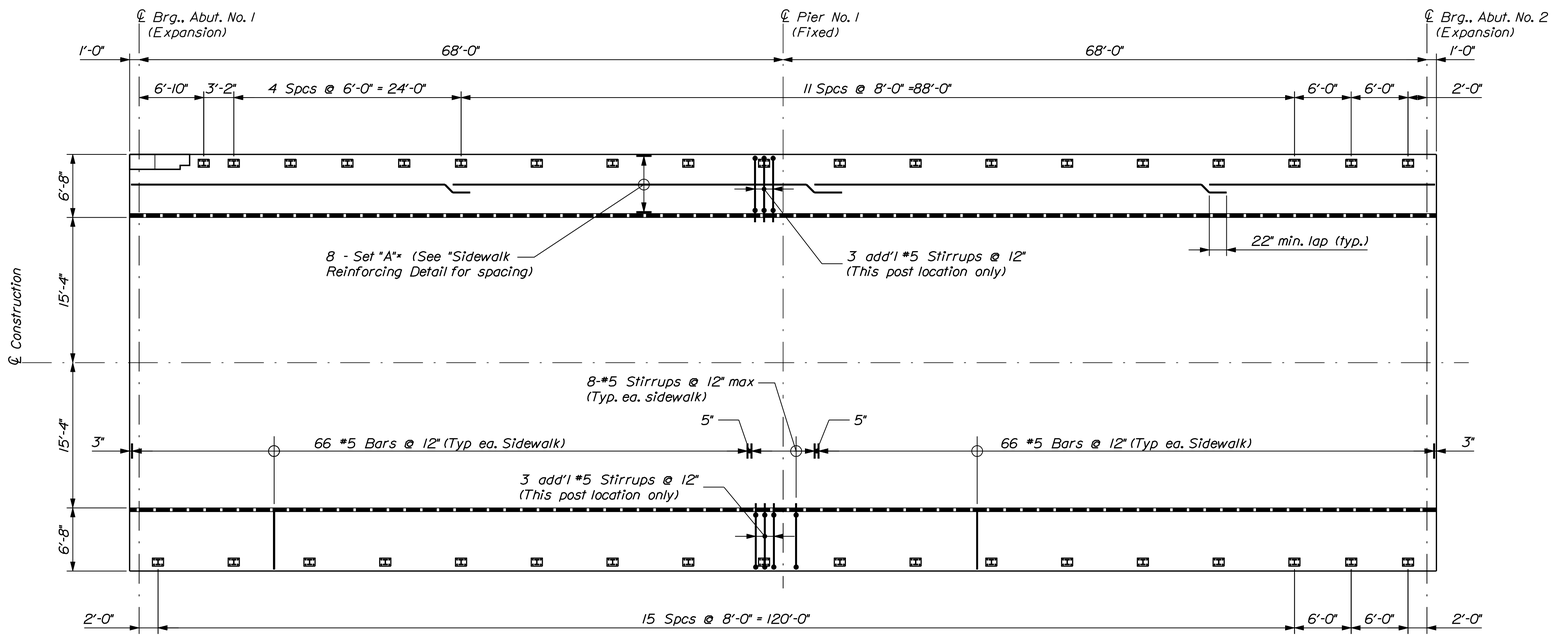

SUPERSTRUCTURE PLAN

*Set "A" = 4 - #5 Bars

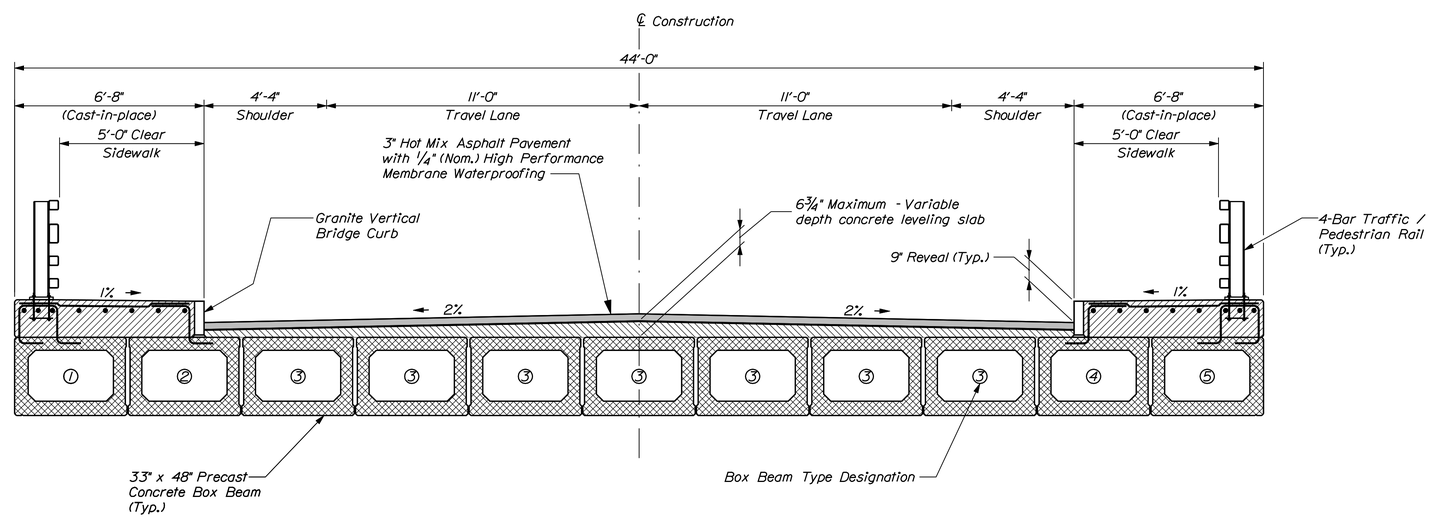

PROPOSED BRIDGE SECTION

STATE OF MAINE
DEPARTMENT OF TRANSPORTATION

AC-BH-1266(200)X

PIN 12662.00

BRIDGE NO. 2688

BRIDGE PLANS

PROJ. MANAGER	S. BODGE	BY	DATE
DESIGN-DETAILED	B. REEVES	B. NICHOLS	FEB 2011
CHECKED-REVIEWED	E. CASWELL	D. SULLIVAN	------
DESIGN2-DETAILED2	------	------	------
DESIGN3-DETAILED3	------	------	------
REVISIONS: 1	------	------	------
REVISIONS: 2	------	------	------
REVISIONS: 3	------	------	------
REVISIONS: 4	------	------	------
FIELD CHANGES	------	------	------

SIGNATURE

P.E. NUMBER

DATE

PRINCETON BRIDGE
GRAND FALLS FLOWAGE
PRINCETON\PASSAMAQUODDY WASHINGTON COUNTY

SUPERSTRUCTURE

SHEET NUMBER

30

OF 33

Filename: ...\msto\030_Superstructure_1.dgn Division: BRIDGE Username: brian.j.nichols Date:3/7/2011

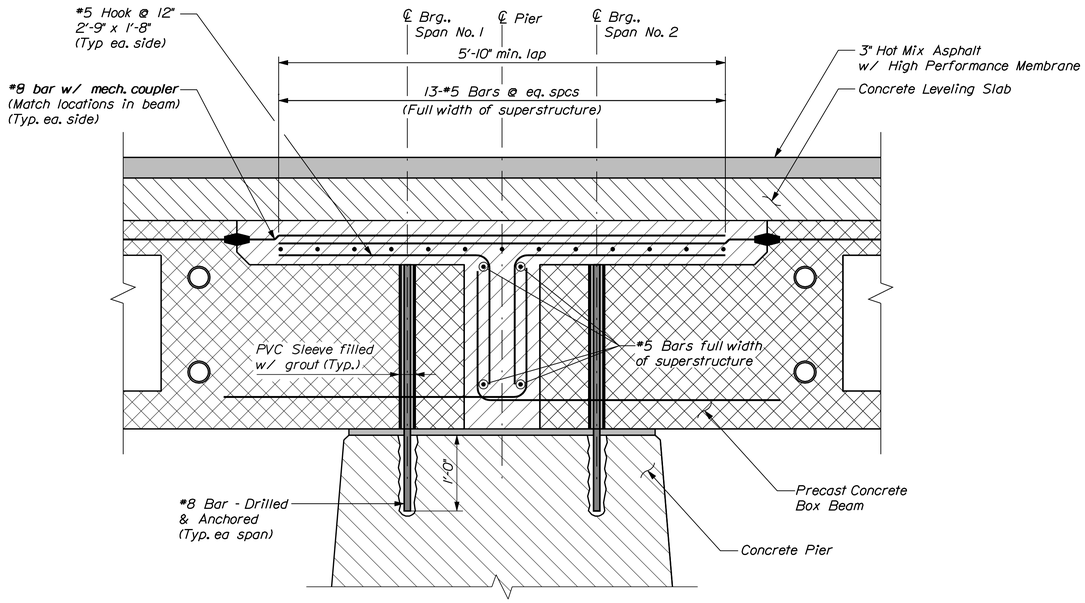

CONTINUITY CONNECTION SECTION

Reinforcing not shown in Pier or Precast Concrete Box Beam

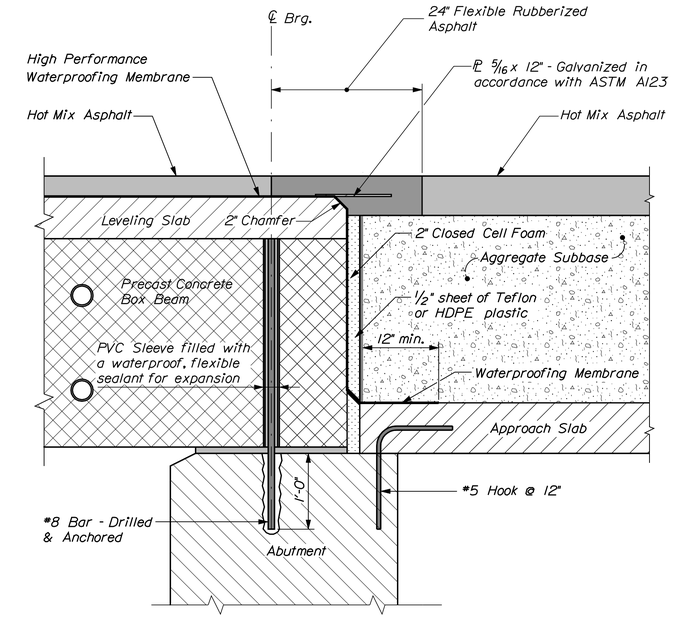

EXPANSION JOINT DETAIL

Reinforcing not shown in Abutment, Approach Slab and Precast Concrete Box Beam

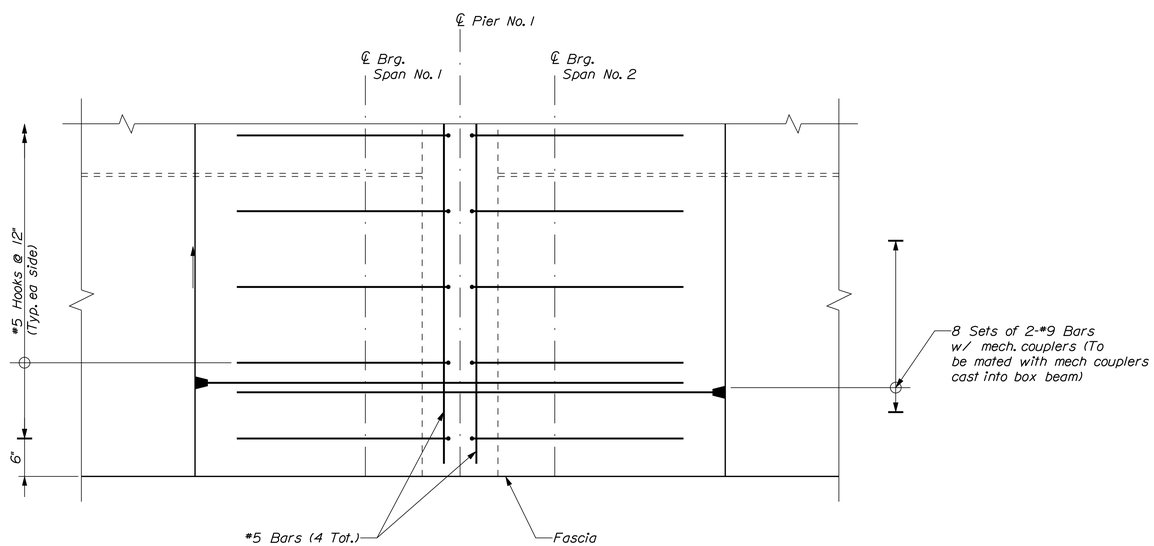

CONTINUITY CONNECTION PLAN

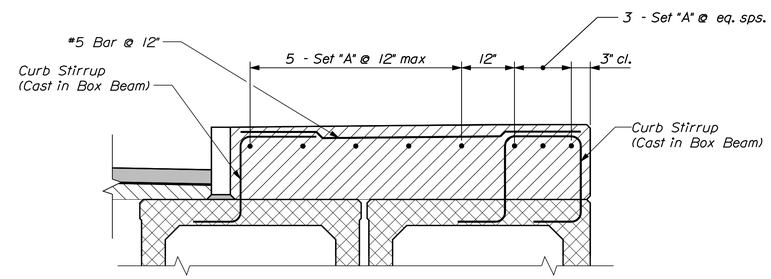

SIDEWALK REINFORCING DETAIL

~SECTION THROUGH PRECAST BOX~

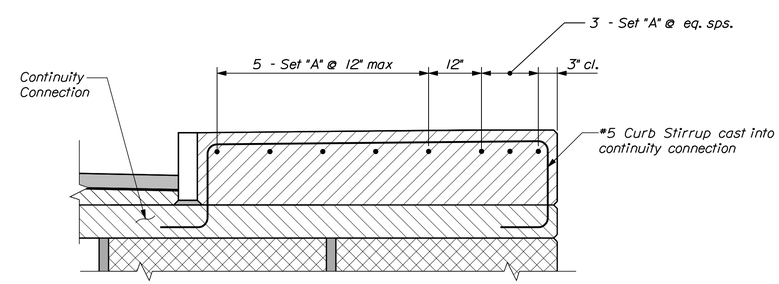

SIDEWALK REINFORCING DETAIL

~SECTION THROUGH CONTINUITY CONNECTION~

STATE OF MAINE
DEPARTMENT OF TRANSPORTATION

AC-BH-1266(200)X

PIN 12662.00

BRIDGE NO. 2688

BRIDGE PLANS

PROJ. MANAGER	S. BOOGE	BY	DATE
DESIGN-DETAILED	B. REEVES	B. NICHOLS	FEB 2011
CHECKED-REVIEWED	E. CASWELL	D. SULLIVAN	
DESIGN2-DETAILED2			
DESIGN3-DETAILED3			
REVISIONS 1			
REVISIONS 2			
REVISIONS 3			
REVISIONS 4			
FIELD CHANGES			

SIGNATURE

P.E. NUMBER

DATE

PRINCETON BRIDGE
GRAND FALLS FLOWAGE
PRINCETON\PASSAMAQUODDY WASHINGTON COUNTY

SUPERSTRUCTURE DETAILS

SHEET NUMBER

31

OF 33

Filename: ...\msta\031_Superstructure_2.dgn Division: BRIDGE Username: brian.j.nichols Date:3/7/2011

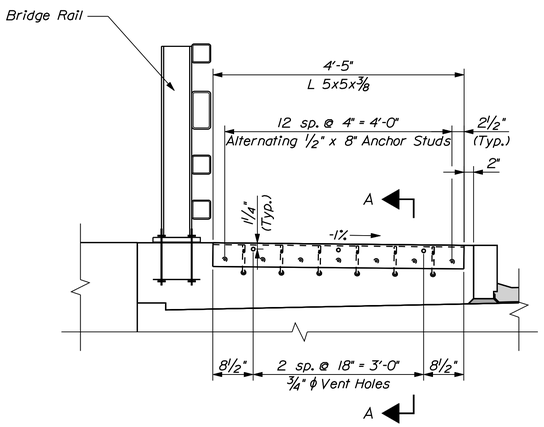

END VIEW SIDEWALK
(Typical Each End)

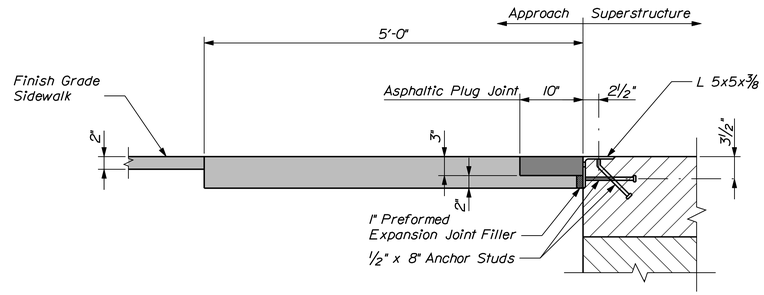

SECTION "A-A"

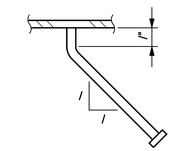

BENT STUD DETAIL

SUPERSTRUCTURE NOTES

1. Reinforcing steel shall have a minimum concrete cover of 2 inches unless otherwise noted.

2. Form a one inch V-groove on the fascias at the horizontal joint between the curb and slab.

3. The superstructure leveling slab concrete shall be placed in one continuous operation and the concrete shall be kept plastic one complete span behind the span being placed.

4. Mortar for bedding and for joints in the granite curb shall contain an approved non-shrink additive.

5. Provide 3 additional stirrups in the curbs at each Transition Barrier location.

6. The Contractor shall install Transition Barrier vertical closed stirrups, as shown in Standard Details Section 526, prior to the placement of the curb or sidewalk concrete.

7. Concrete for Continuity Connection shall be paid for under Item No. 502.25-Structural Concrete Superstructure Slab.

STATE OF MAINE
DEPARTMENT OF TRANSPORTATION

AC-BH-1266(200)X

PIN 12662.00

BRIDGE NO. 2688

BRIDGE PLANS

PROJ. MANAGER	S. BOOGE	BY	DATE
DESIGN-DETAILED	B. REEVES	B. NICHOLS	FEB 2011
CHECKED-REVIEWED	E. CASWELL	D. SULLIVAN	
DESIGN2-DETAILED2			
DESIGN3-DETAILED3			
REVISIONS 1			
REVISIONS 2			
REVISIONS 3			
REVISIONS 4			
FIELD CHANGES			

SIGNATURE

P.E. NUMBER

DATE

PRINCETON BRIDGE
GRAND FALLS FLOWAGE
PRINCETON\PASSAMAQUODDY WASHINGTON COUNTY

SUPERSTRUCTURE DETAILS

SHEET NUMBER
32
OF 33

Filename: ...\msta\032_Superstructure_3.dgn Division: BRIDGE Username: brian.j.nichols Date:3/7/2011

Filename: ...\00\ROW\MSTA\001_RWPLAN1.dgn Division: BRIDGE Username: brian.j.nichols Date:3/7/2011

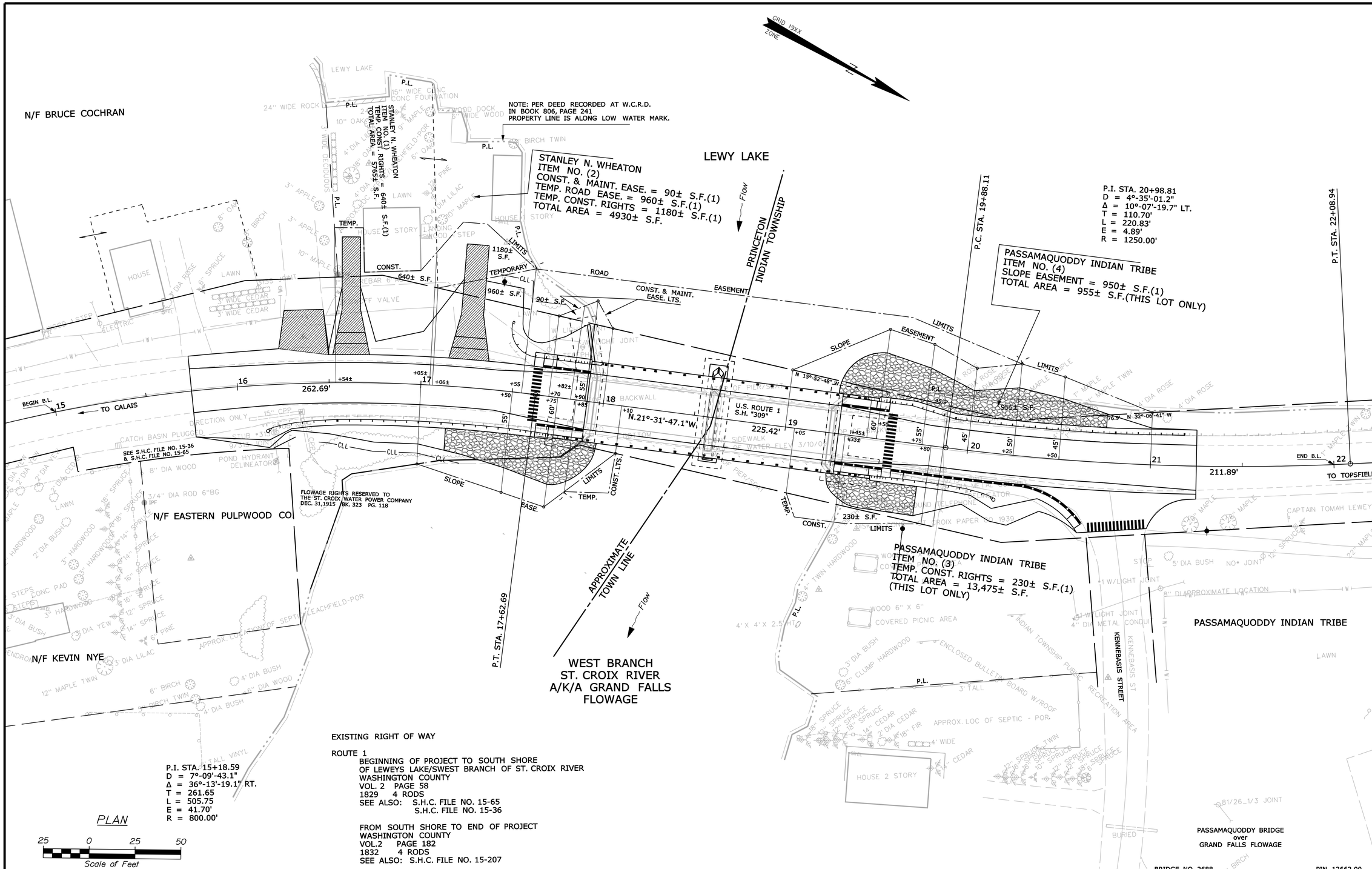

EXISTING RIGHT OF WAY

ROUTE 1
BEGINNING OF PROJECT TO SOUTH SHORE
OF LEWEYS LAKE/SWEST BRANCH OF ST. CROIX RIVER
WASHINGTON COUNTY
VOL. 2 PAGE 58
1829 4 RODS
SEE ALSO: S.H.C. FILE NO. 15-65
S.H.C. FILE NO. 15-36

FROM SOUTH SHORE TO END OF PROJECT
WASHINGTON COUNTY
VOL.2 PAGE 182
1832 4 RODS
SEE ALSO: S.H.C. FILE NO. 15-207

SYMBOLS
- IP or IPF (IRON PIPE or PIN FOUND)
- ST. (SEPTIC TANK)
- (ROW MONUMENT)
- &BM (TRAVERSE POINT)
- WELL
- GROUNDING UNIT LINE
- CONS. PROPERTY LINE
- PROPERTY LINE
- LIMITS OF "ARC" RIGHT OF WAY
- EXISTING RIGHT OF WAY
- NEW RIGHT OF WAY
- NEW ROW WITHIN EXIST. ROW
- CONTROL OF ACCESS
- WATER LINE
- GAS LINE
- ELECTRIC LINE
- TELEPHONE LINE
- SEWER LINE

ITEM	TECH	CHECKED
BASE MAP		
EXIST. R/W	D.S.G.	
PROP. LINES	T.L.B.	
AREAS	T.L.B.	P.N.S.

STATE OF MAINE
DEPARTMENT OF TRANSPORTATION
16 STATE HOUSE STATION - AUGUSTA, ME 04333-0016
PRINCETON- INDIAN TOWNSHIP
RIGHT OF WAY MAP

REVISIONS

NO.	DATE	DESCRIPTION	BY

PLAN FILED IN PLAN BOOK PAGE COUNTY RECORD

NO.	GRANTOR	INSTRUMENT	DATE	BOOK	PAGE
1&2	STANLEY N. WHEATON	EASEMENT	12/21/10	3702	97
3&4	PASSAMAQUODDY TRIBE OF INDIANS AT INDIAN TOWNSHIP	EASEMENT	12/21/10	3702	95

DAVID A. COLE
COMMISSIONER
KENNETH L. SWEENEY
CHIEF ENGINEER
DATE

STATE OF MAINE
PETER A. BELANGER 1341
PROFESSIONAL LAND SURVEYOR

STATE HIGHWAY "309"
U.S. ROUTE 1
PRINCETON- INDIAN TOWNSHIP WASHINGTON COUNTY
FEDERAL AID PROJECT NO. BH-1266(200)X

SEPTEMBER 2010 | RIGHT-OF-WAY MAP | D.O.T. FILE NO. 15-310
SCALE 1" = 25' | SHEET 1 OF 1

SHEET NUMBER
33
OF 33