PIN 4783.00	F.H.W.A. REG. NO.	STATE	PROJECT NUMBER	SHEET NO.	TOTAL SHEETS
BRIDGE #3911	1	MAINE	BR-0527(1)X	16	47

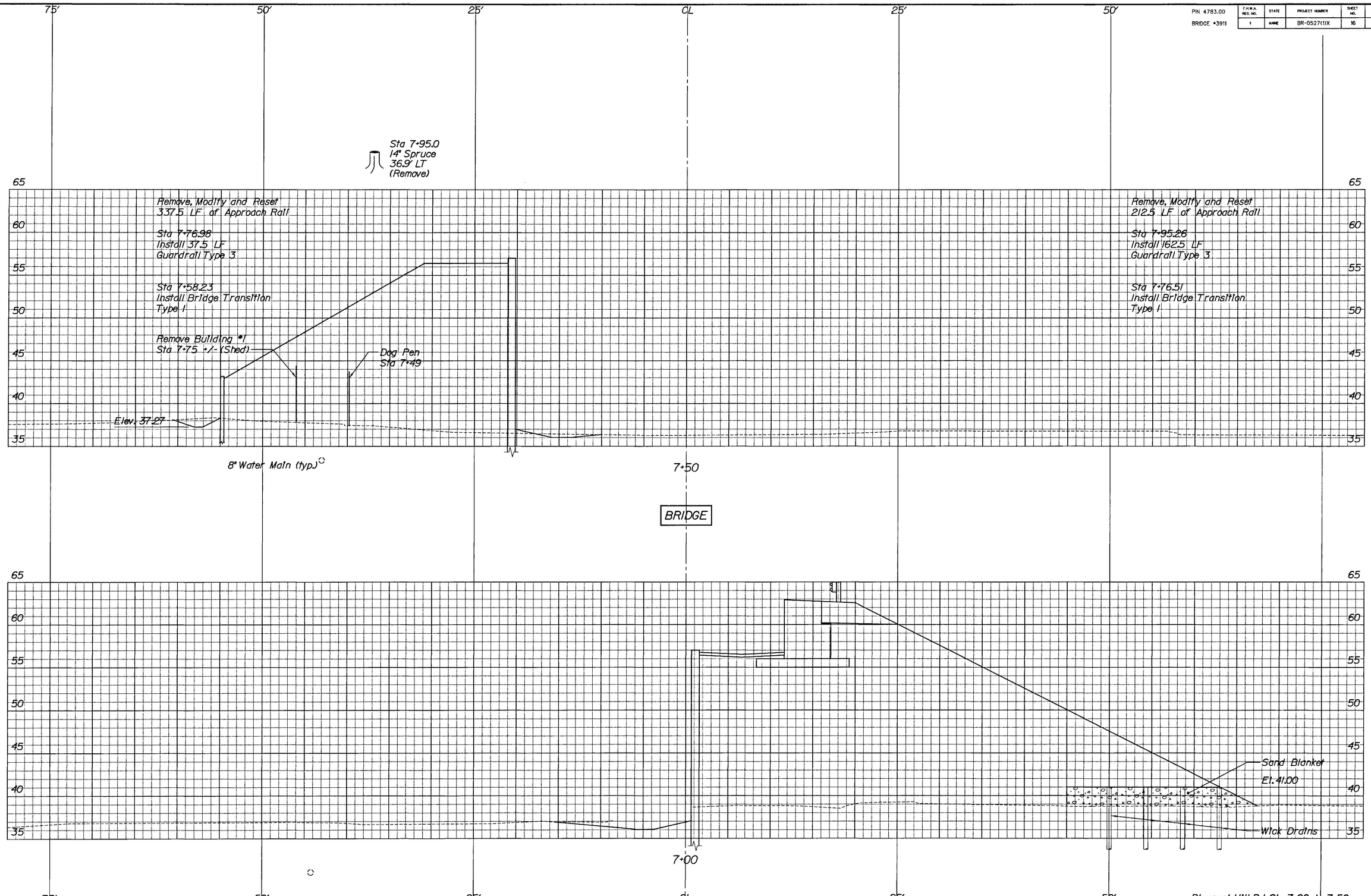

Pleasant Hill Rd. Sta. 7+00 to 7+50

PROJECT DESIGN ENGINEER	EBC	BY	DATE
DESIGN DETAILED	EBC	JCC	11-96
CHECKED	JAB		11-96
REVISIONS			
FIELD CHANGES			

PLANS

PIN 4783.00	F.H.W.A. REG. NO.	STATE	PROJECT NUMBER	SHEET NO.	TOTAL SHEETS
BRIDGE #3911	1	MAINE	BR-0527(1)X	17	47

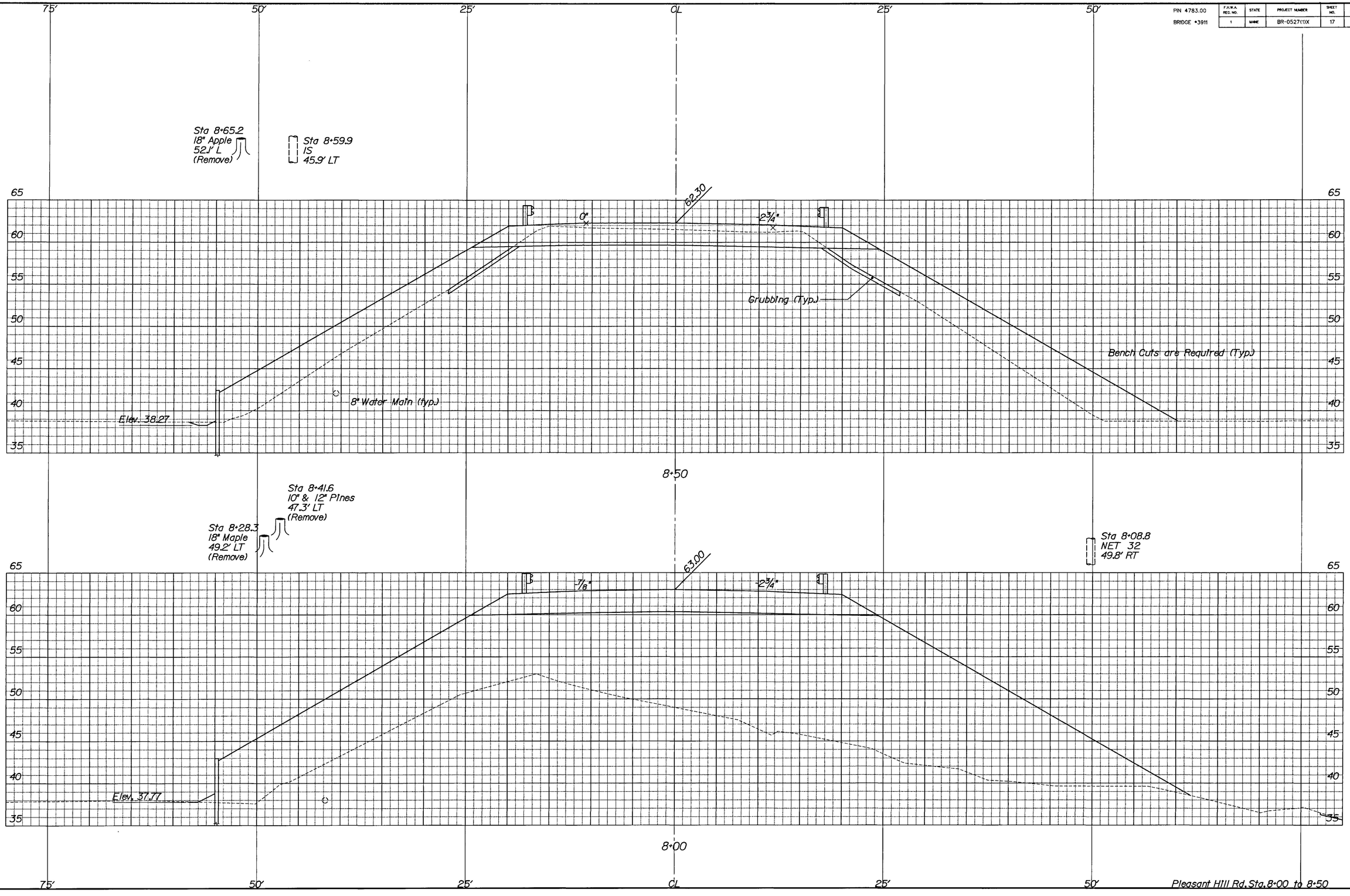

PROJECT DESIGN ENGINEER	EBC	BY	DATE
DESIGN-DETAILED	EBC	JCC	11-96
CHECKED	JAB		11-96
REVISIONS			
FIELD CHANGES			

PLANS

Pleasant Hill Rd. Sta. 8+00 to 8+50

PIN 4783.00	F.H.W.A. REG. NO.	STATE	PROJECT NUMBER	SHEET NO.	TOTAL SHEETS
BRIDGE #3911	1	MAINE	BR-0527(1)X	18	47

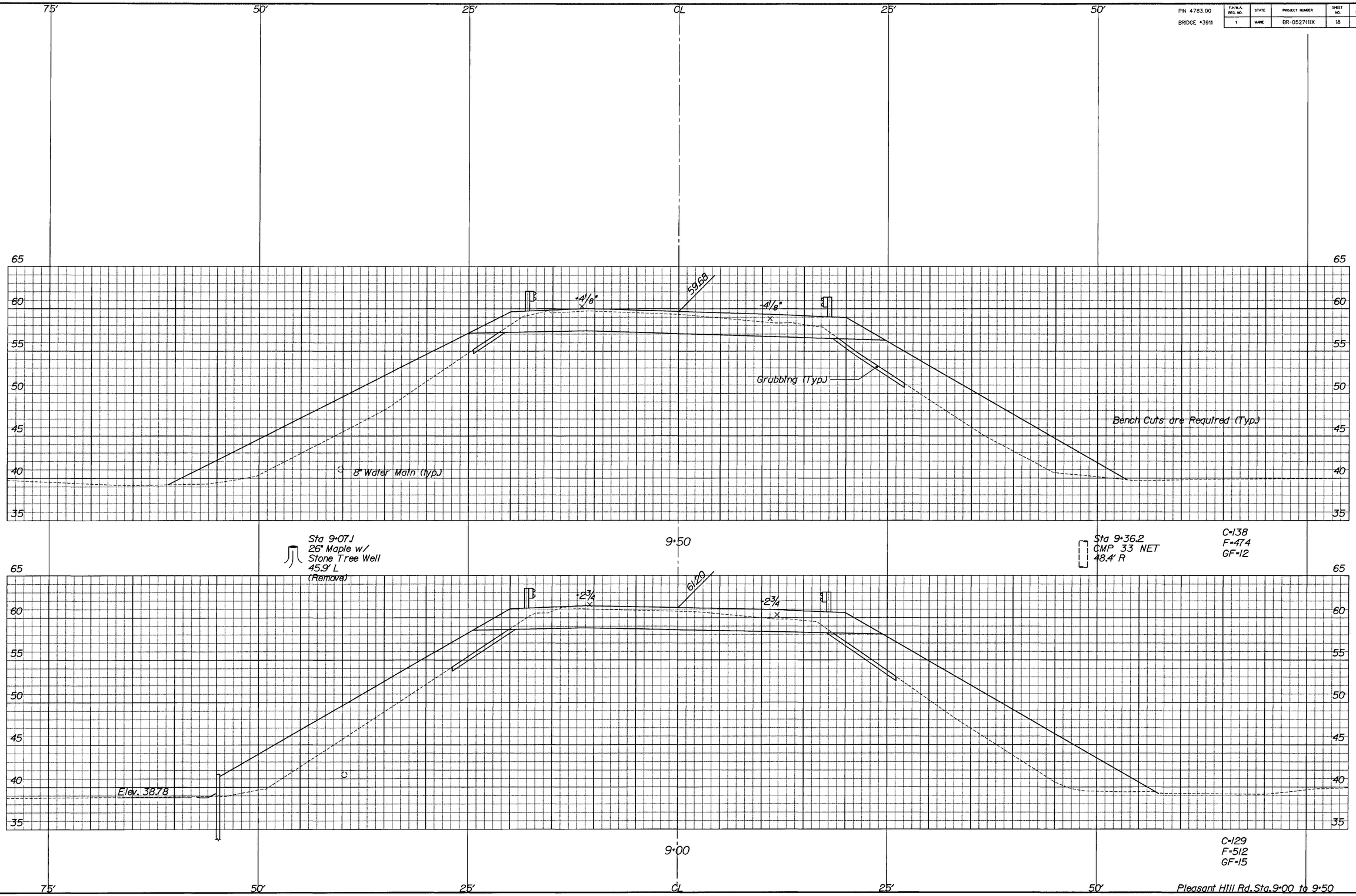

Pleasant Hill Rd. Sta. 9+00 to 9+50

PROJECT DESIGN ENGINEER	EBC	BY	DATE
DESIGN-DETAILED	EBC	JCC	11-96
CHECKED	JAB		11-96
REVISIONS			
FIELD CHANGES			

PLANS

PIN 4783.00	F.H.W.A. REG. NO.	STATE	PROJECT NUMBER	SHEET NO.	TOTAL SHEETS
BRIDGE #3911	1	MAINE	BR-0527(1)X	19	47

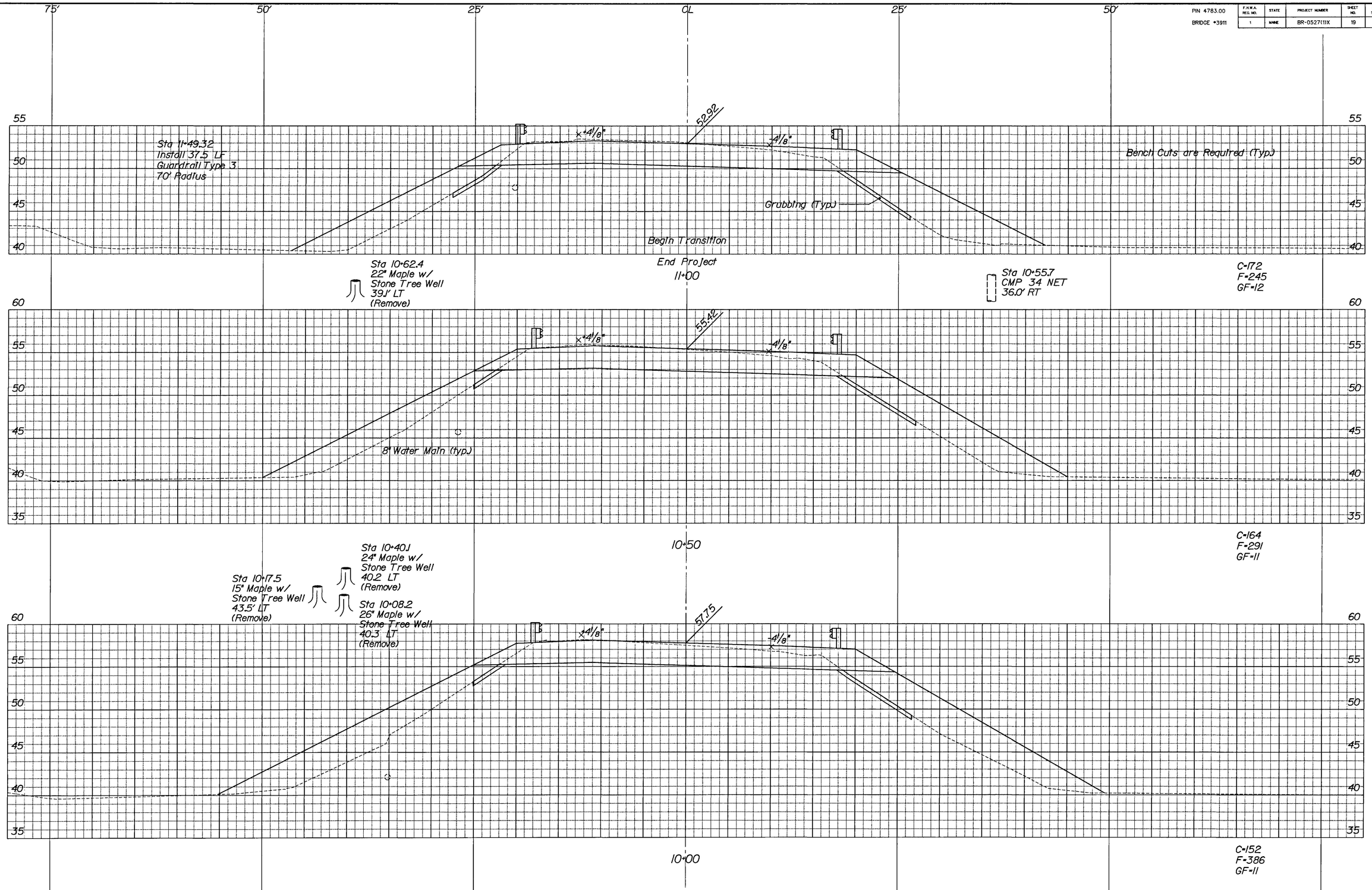

PROJECT DESIGN ENGINEER	EBC	BY	DATE
DESIGN DETAILED	EBC	JCC	11-98
CHECKED	JAB		11-98
REVISIONS			
FIELD CHANGES			

PLANS

PIN 4783.00	F.H.W.A. REG. NO.	STATE	PROJECT NUMBER	SHEET NO.	TOTAL SHEETS
BRIDGE #3911	1	MAINE	BR-0527(1)X	20	47

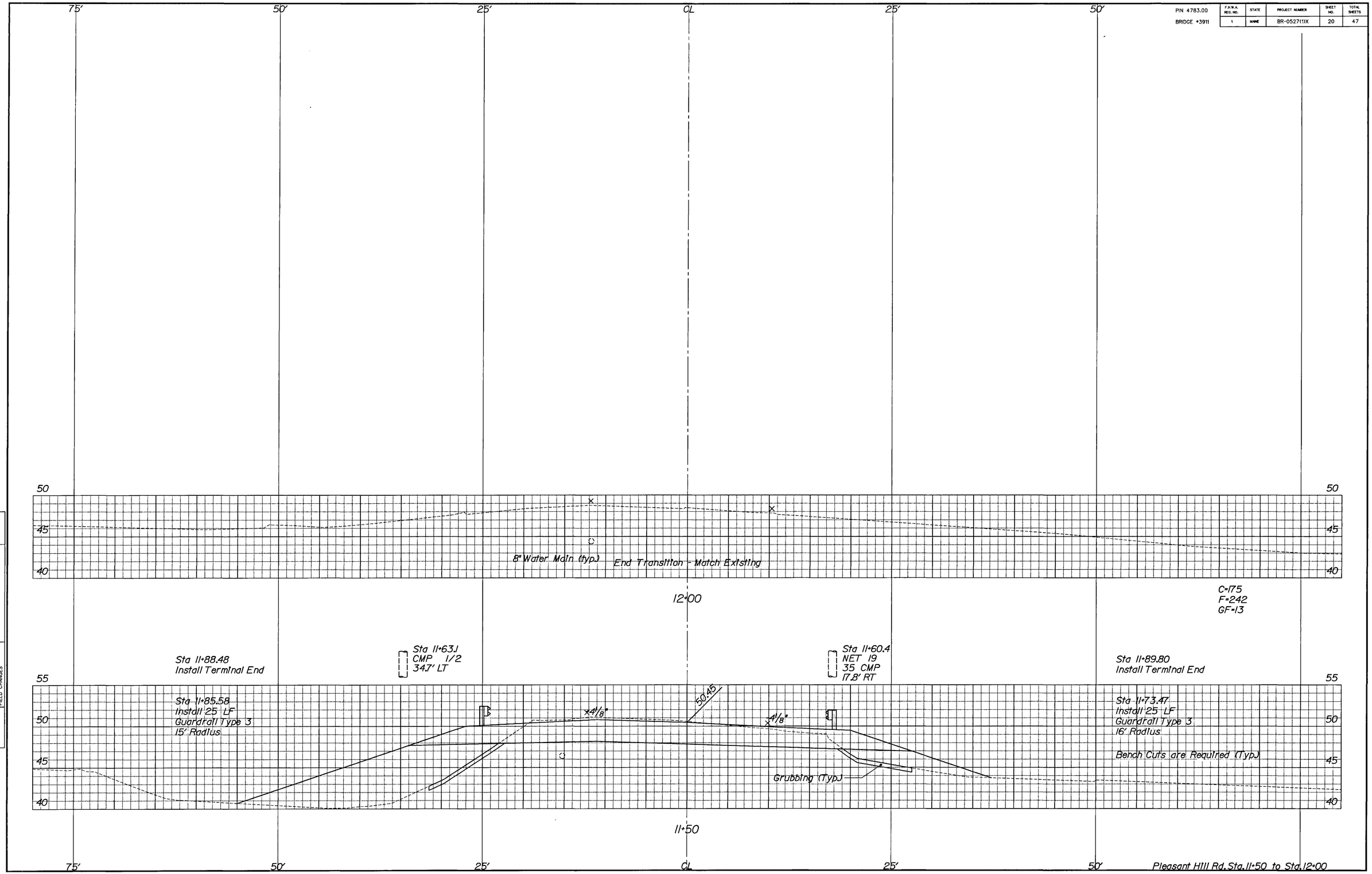

PROJECT DESIGN ENGINEER	EBC	BY	DATE
DESIGN-DETAILED	EBC	JCC	11-96
CHECKED			11-96
REVISIONS	JAB		
FIELD CHANGES			

PLANS

PIN 4783.00	F.H.W.A. REG. NO.	STATE	PROJECT NUMBER	SHEET NO.	TOTAL SHEETS
BRIDGE #3911	1	MAINE	BR-0527(1)X	21	47

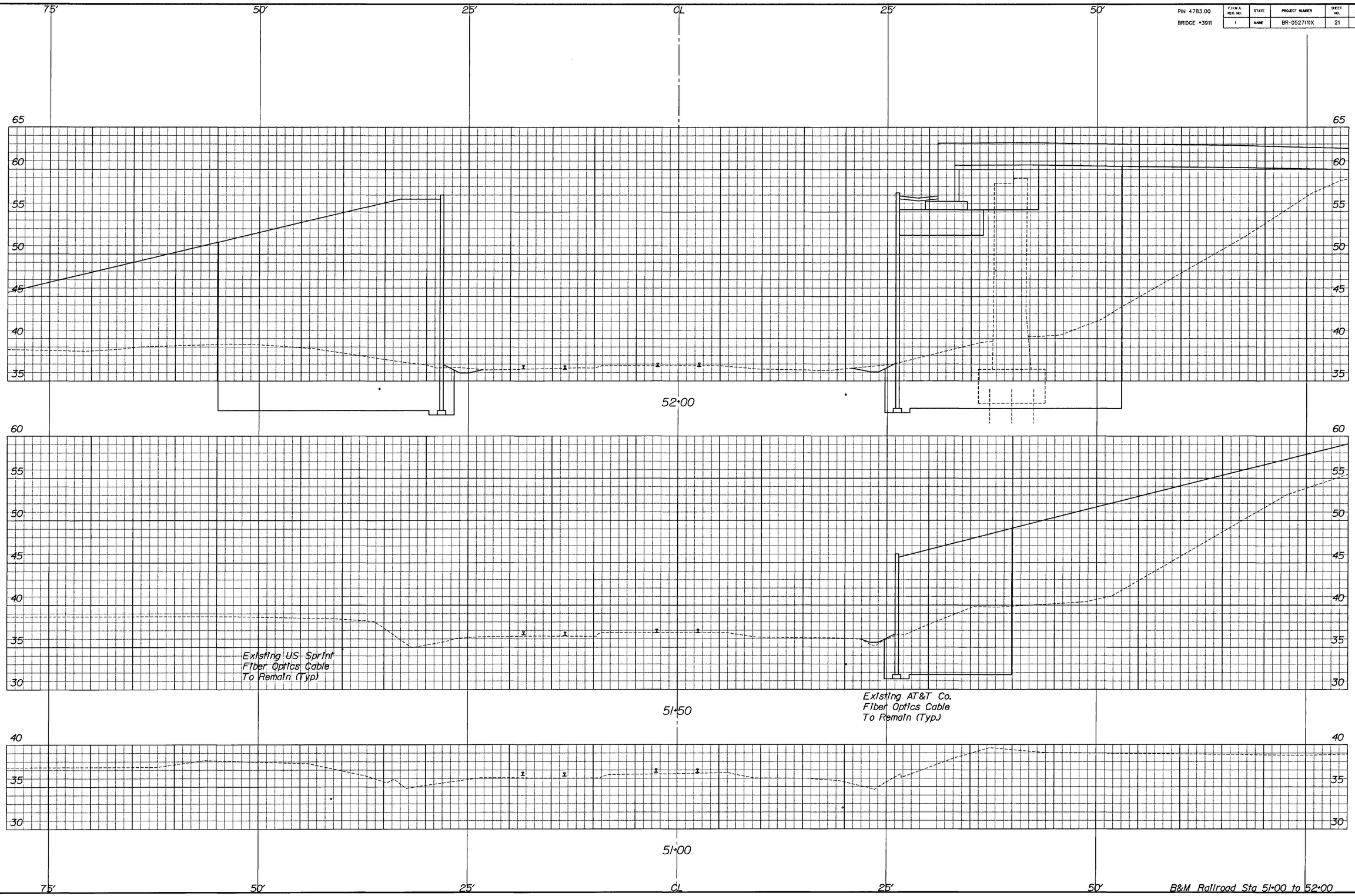

PROJECT DESIGN ENGINEER	EBC	BY	DATE
DESIGN-DETAILED	EBC	JCC	11-96
CHECKED	JAB		11-96
REVISIONS			
FIELD CHANGES			

PLANS

PIN 4783.00	F.H.W.A. REG. NO.	STATE	PROJECT NUMBER	SHEET NO.	TOTAL SHEETS
BRIDGE #3911	1	MAINE	BR-0527(1)X	22	47

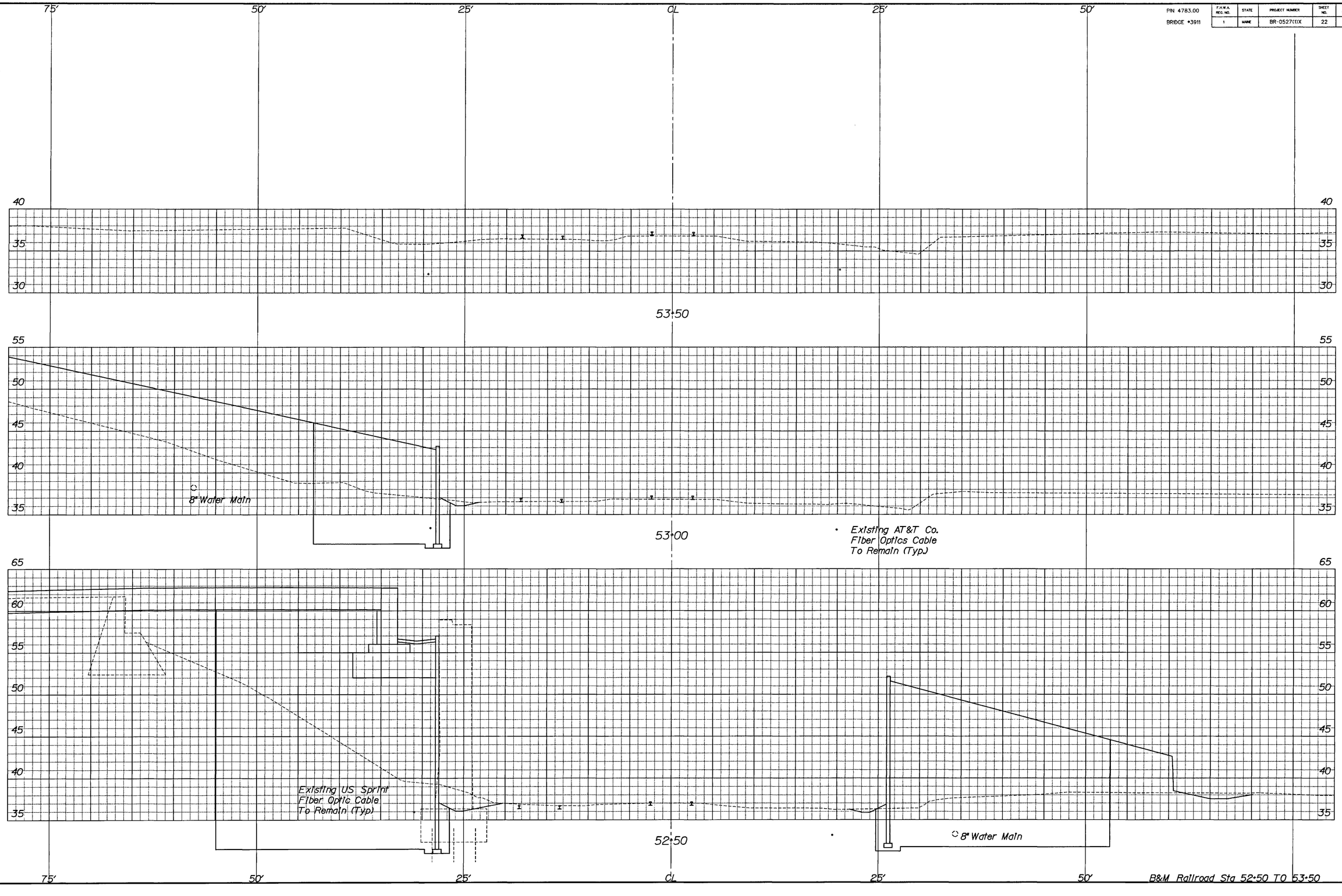

PROJECT DESIGN ENGINEER	EBC	BY	DATE
DESIGN-DETAILED	EBC	JCC	11-96
CHECKED	JAB		11-96
REVISIONS			
FIELD CHANGES			

PLANS

PIN 4783.00	F.H.W.A. REG. NO.	STATE	PROJECT NUMBER	SHEET NO.	TOTAL SHEETS
BRIDGE #3911	1	MAINE	BR-0527(1)X	23	47

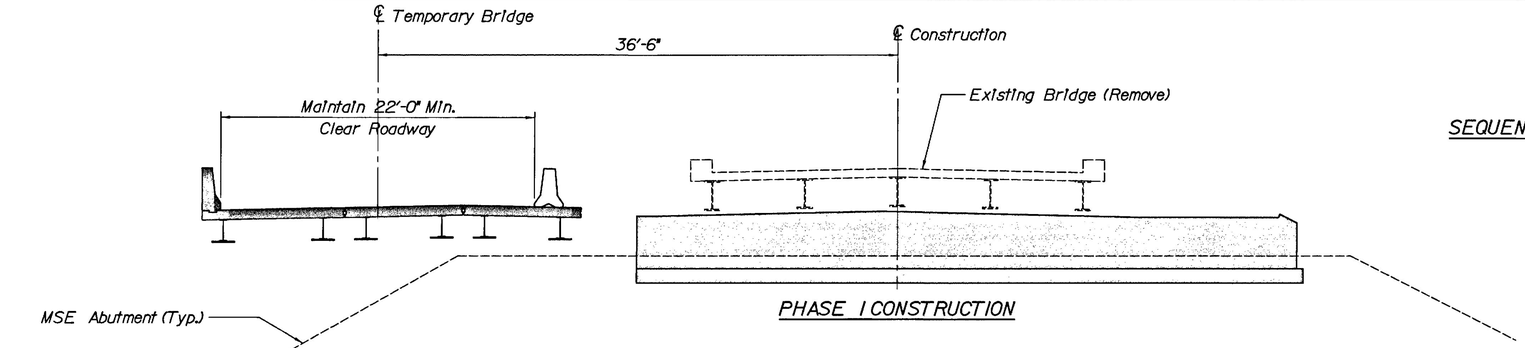

PHASE 1 CONSTRUCTION

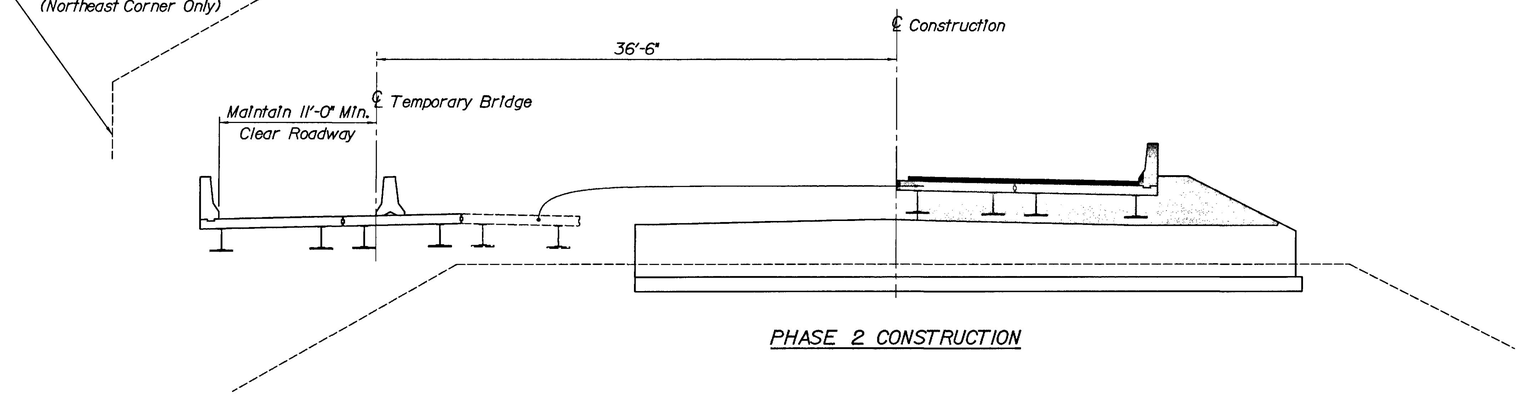

PHASE 2 CONSTRUCTION

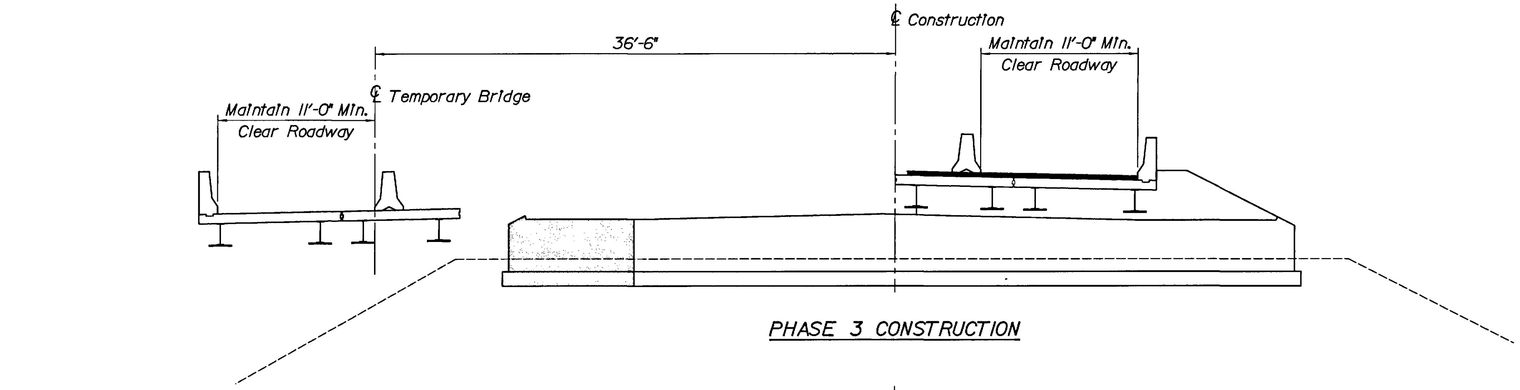

PHASE 3 CONSTRUCTION

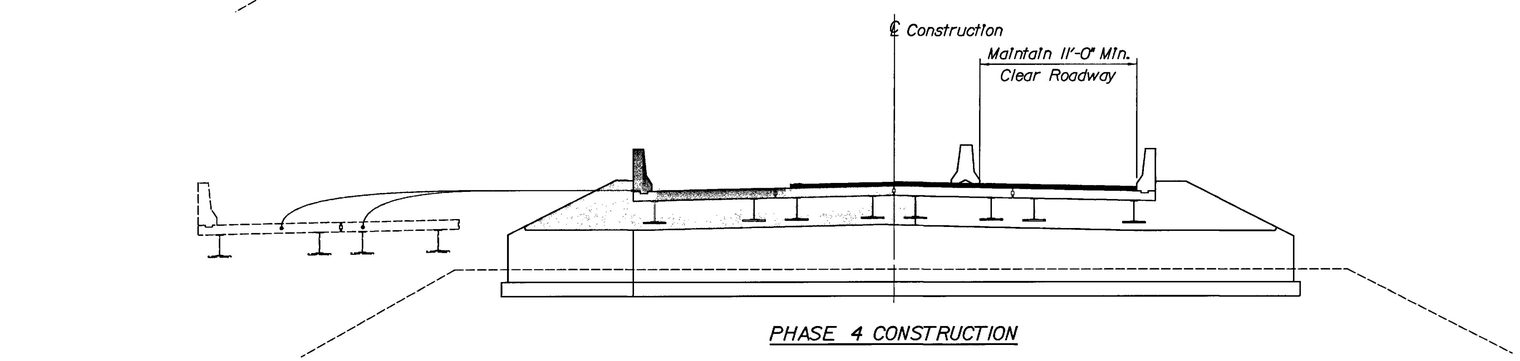

PHASE 4 CONSTRUCTION

SEQUENCE OF CONSTRUCTION NOTES:

Phase 1:
1. Construct portion of MSE Abutments and MSE Retaining Wall to North.
2. Construct temporary bridge with 3 PPC/S panels.
3. Maintain traffic on existing structure until temporary is constructed.
4. Remove existing bridge after temporary is completed
5. Maintain two way traffic on temporary while constructing remaining portion of MSE Abutment and a portion of abutments.

Phase 2:
1. During weekend time, maintain one lane of traffic on temporary bridge.
2. Move one panel from temporary into final position and erect fourth PPC/S Panel in its final position
3. Place a portion of Abutments.

Phase 3:
1. Maintain two way traffic, one lane on temporary, one lane on new bridge.
2. Place a portion of abutments.

Phase 4:
1. During weekend time, maintain one lane of traffic on new bridge.
2. Move last two panels from temporary into their final position.
3. Place remaining portion of abutments.

Notes:

1. It is the Contractor's sole responsibility to determine the erection procedure and sequence to provide adequate temporary supports for the existing structure and to prevent the undermining of the existing abutments. Payment will be considered incidental to related contract items.
2. Other methods of Maintenance of Traffic and Sequence of Construction may be used as approved by the Engineer.
3. Payment for all the work and materials required for Maintenance of Traffic, such as temporary concrete barriers, maintenance of traffic control devices, drums, and cones as approved by the Engineer will be paid for under the applicable pay items.

PROJECT DESIGN ENGINEER	EBC	BY	DATE
DESIGN-DETAILED	EBC	JCC	11-96
CHECKED	JAB		11-96
REVISIONS			
FIELD CHANGES			

PLANS

STATE OF MAINE
DEPARTMENT OF TRANSPORTATION

PLEASANT AVENUE
CROSSING
OVER
BOSTON & MAINE RAILROAD
IN THE TOWN OF
SCARBOROUGH
CUMBERLAND COUNTY
SEQUENCE OF CONSTRUCTION

AUGUSTA, MAINE

PIN 4783.00	F.H.W.A. REG. NO.	STATE	PROJECT NUMBER	SHEET NO.	TOTAL SHEETS
BRIDGE #3911	1	MAINE	BR-0527(1)X	24	47

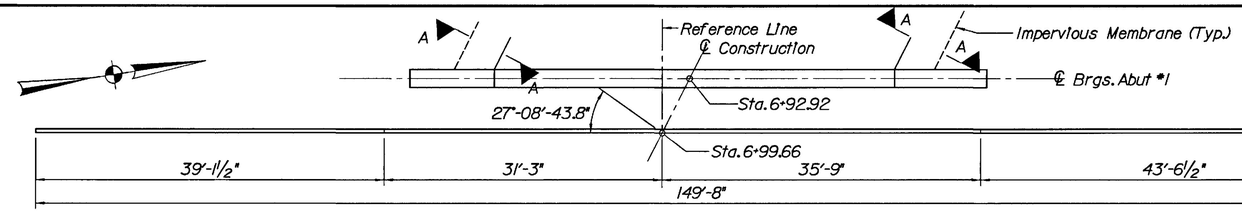

ABUTMENT NO. 1
MSE WALL PLAN

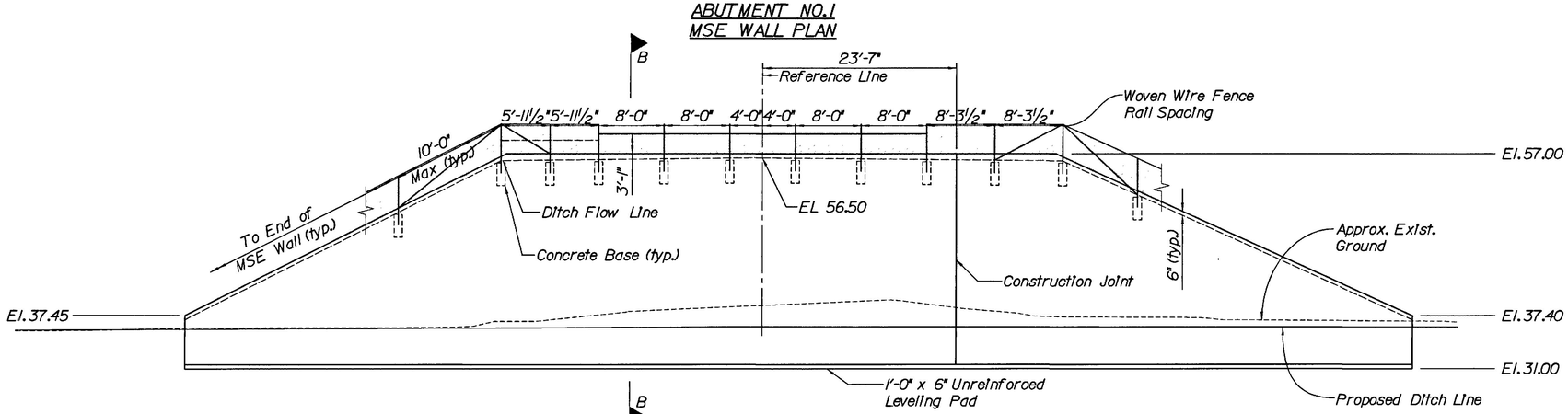

ABUTMENT NO. 1
MSE WALL ELEVATION

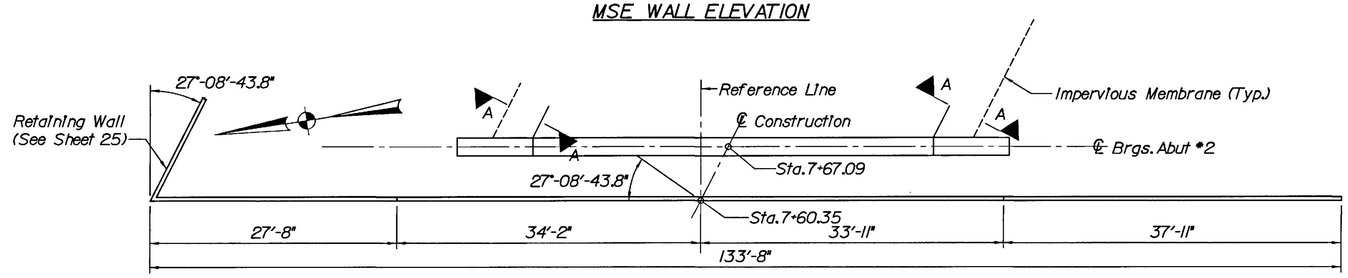

ABUTMENT NO. 2
MSE WALL PLAN

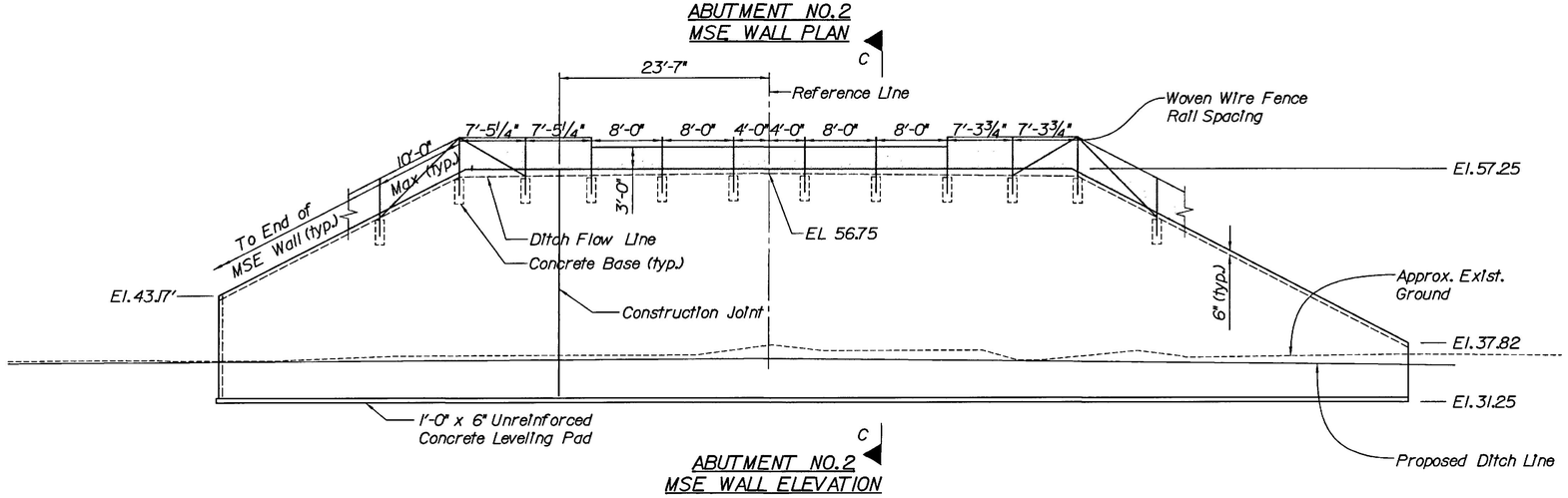

ABUTMENT NO. 2
MSE WALL ELEVATION

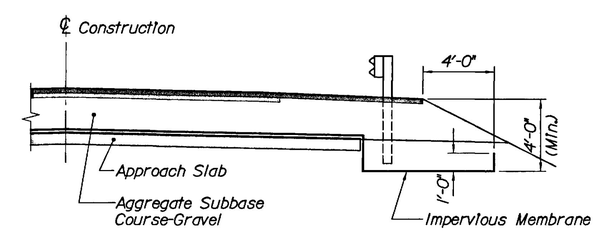

SECTION A-A

MSE RETAINING WALL NOTES

1. Mechanically Stabilized Earth (MSE) structures will be founded on undisturbed native soils or compacted gravel borrow.
2. Backfill material shall meet the requirements of subsection 703.20 Gravel Borrow and Supplemental Specification Section 636 with the exception that the maximum aggregate size will be 4 inches.
3. MSE retaining walls shall be designed in accordance with Supplemental Specification Section 636. The wall will be designed to accommodate a minimum differential settlement of 2½" at the abutment locations over the life of the wall.
4. MSE retaining wall section within 12 feet (min.) of the abutment footing shall be designed to accommodate additional pressures due to footing pressures and other supplemental loads applied at the bridge seat.
6. The maximum applied abutment footing bearing pressure at the foundation level is 1.0 ton/sf.
7. The maximum allowable MSE wall bearing pressure at the foundation level is 2.0 tons/sf.
8. Actual wall dimensions may vary slightly to account for the manufacturer's panel dimensions.
9. A ditch shall be constructed behind the top of the MSE retaining walls. The ditch shall be laid out from the centerline of construction and continue out both sides at a ⅛" per foot slope, then terminate at the side slopes. The ditch shall be lined with four inches of bituminous treated stone slope protection.

Refer to HD-9 for Woven Wire Fence Details

STATE OF MAINE
DEPARTMENT OF TRANSPORTATION

PLEASANT AVENUE CROSSING
OVER
B&M RAILROAD
IN THE TOWN OF
SCARBOROUGH
CUMBERLAND COUNTY
MECHANICALLY STABILIZED EARTH WALLS
AUGUSTA, MAINE

PROJECT DESIGN ENGINEER	EBC	BY	DATE
DESIGN-DETAILED	EBC	JCC	11-96
CHECKED	JAB		11-96
REVISIONS			
FIELD CHANGES			

PLANS

PIN 4783.00	F.H.W.A. REG. NO.	STATE	PROJECT NUMBER	SHEET NO.	TOTAL SHEETS
BRIDGE #3911	1	MAINE	BR-0527(1)X	25	47

NOTES:

1. Bituminous Treated Stone Slope Protection shall be paid for under Special Provision 513 Slope Protection.
2. Crushed Stone Fill shall meet the requirements of Special Provision 203, Excavation & Embankment and shall extend two feet beyond end of footings.

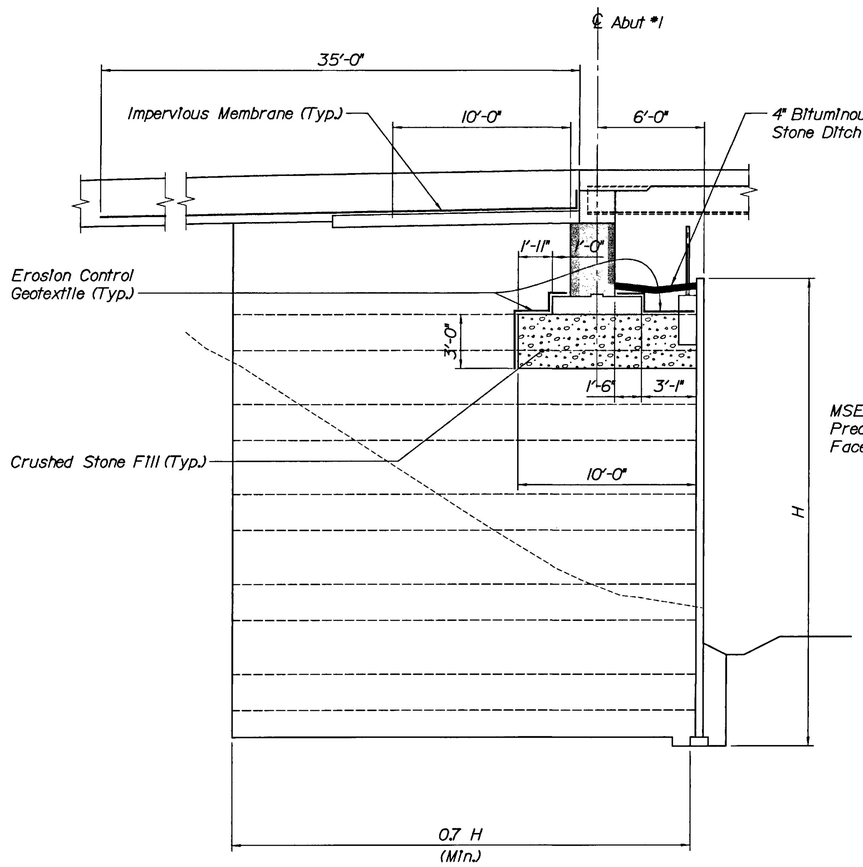

SECTION B-B

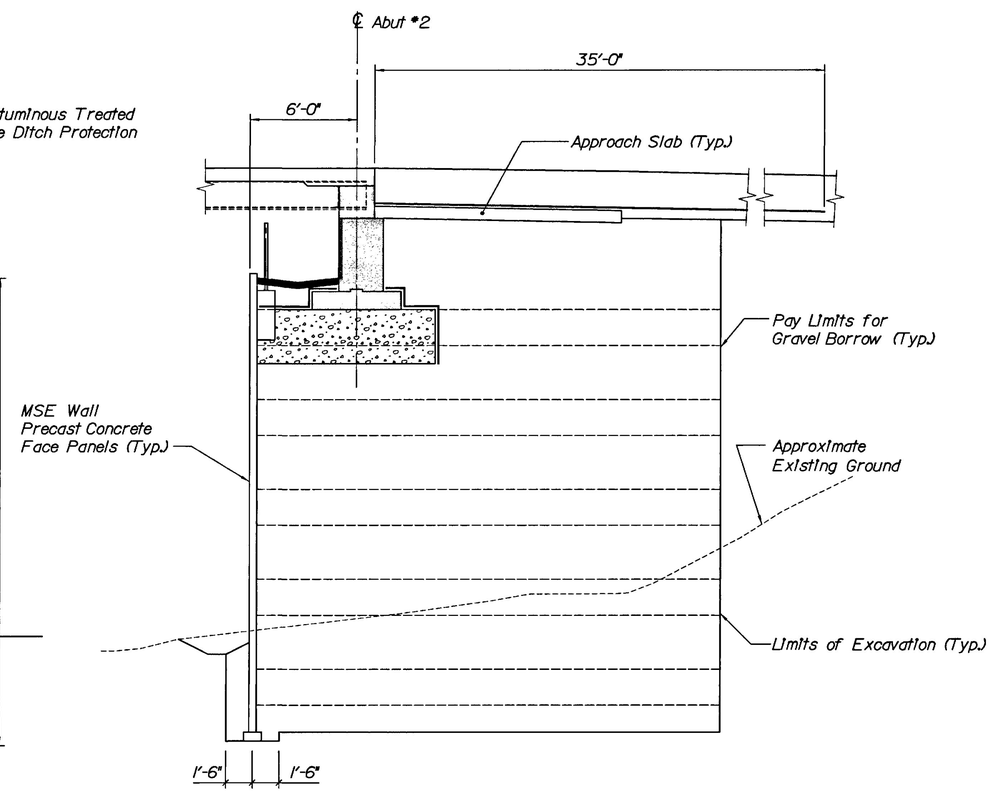

SECTION C-C

PROJECT DESIGN ENGINEER	EBC	BY	DATE
DESIGN-DETAILED	EBC	JCC	11-96
CHECKED	JAB		11-96
REVISIONS			
FIELD CHANGES			

PLANS

STATE OF MAINE
DEPARTMENT OF TRANSPORTATION

PLEASANT AVENUE CROSSING
OVER
B&M RAILROAD
IN THE TOWN OF
SCARBOROUGH
CUMBERLAND COUNTY

MECHANICALLY STABILIZED EARTH WALL SECTIONS

AUGUSTA, MAINE

PIN 4783.00	F.H.W.A. REG. NO.	STATE	PROJECT NUMBER	SHEET NO.	TOTAL SHEETS
BRIDGE #3911	1	MAINE	BR-0527(1)X	26	47

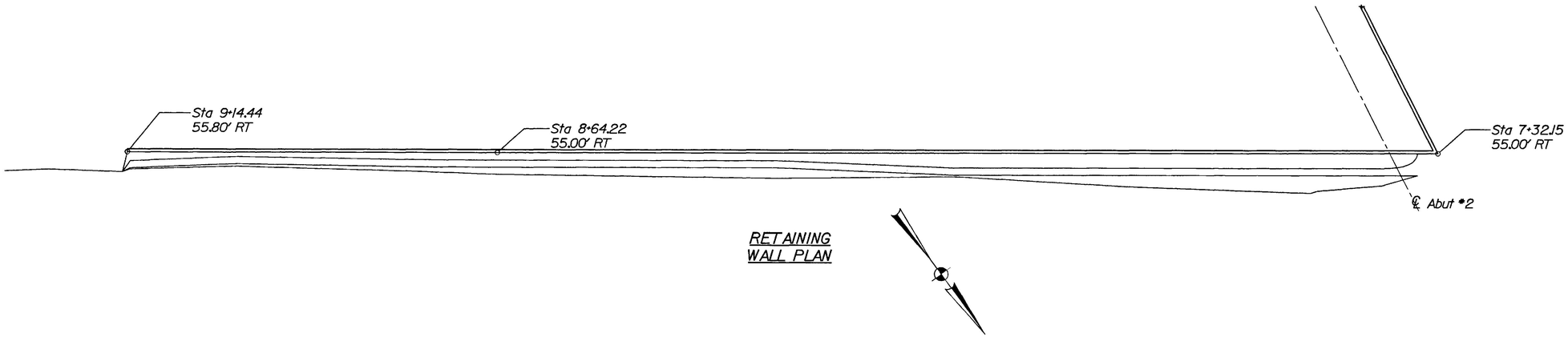

RETAINING WALL PLAN

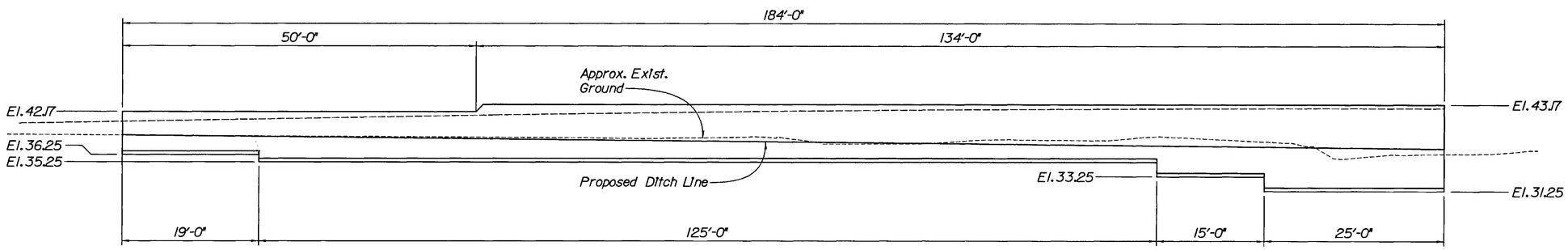

RETAINING WALL ELEVATION

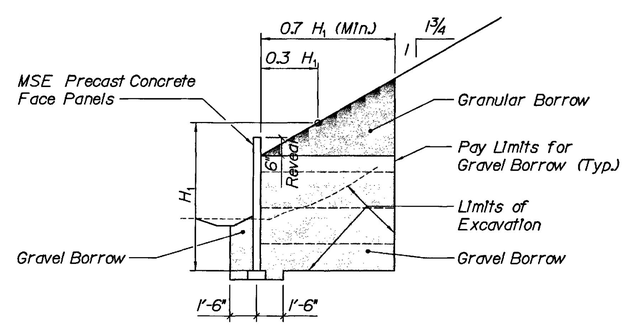

TYPICAL WALL SECTION

PROJECT DESIGN ENGINEER	EBC	BY	DATE
PLANS	DESIGN-DETAILED	EBC	11-96
	CHECKED	JJT	11-96
	REVISIONS	JJG	
	FIELD CHANGES		

STATE OF MAINE
DEPARTMENT OF TRANSPORTATION

PLEASANT AVENUE CROSSING
OVER
B&M RAILROAD
IN THE TOWN OF
SCARBOROUGH
CUMBERLAND COUNTY
RETAINING WALL

AUGUSTA, MAINE

PIN 4783.00	F.H.W.A. REG. NO.	STATE	PROJECT NUMBER	SHEET NO.	TOTAL SHEETS
BRIDGE #3911	1	MAINE	BR-0527(1)X	27	47

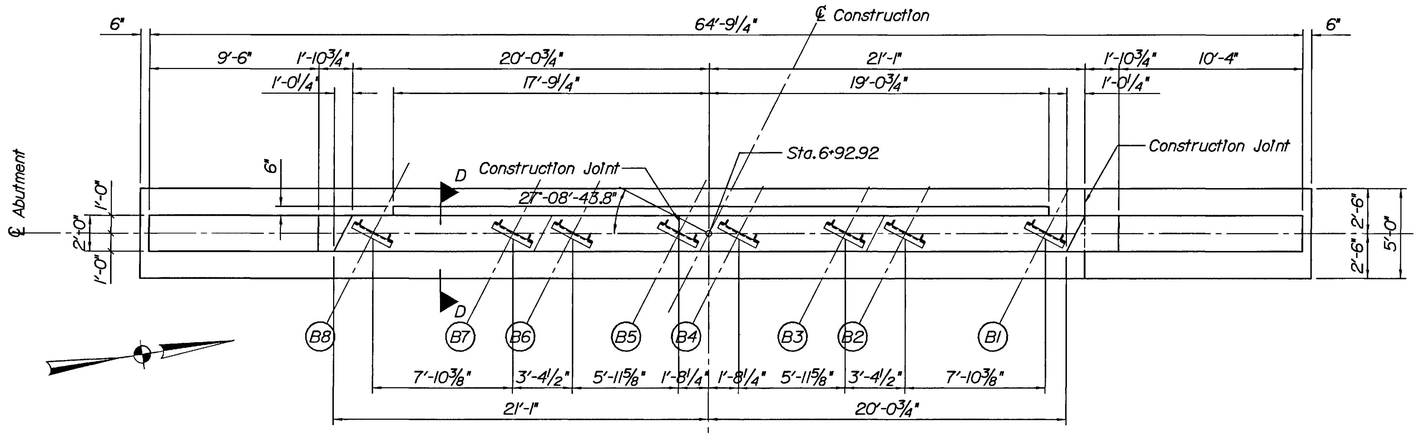

PLAN - ABUTMENT NO.1

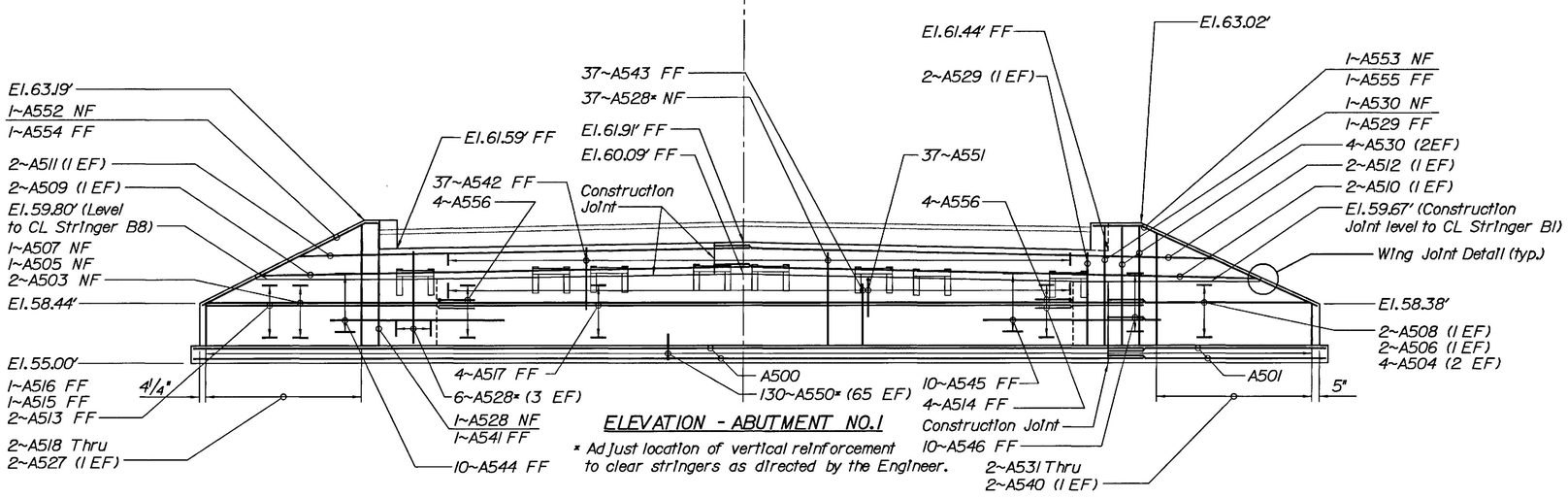

ELEVATION - ABUTMENT NO.1

* Adjust location of vertical reinforcement to clear stringers as directed by the Engineer.

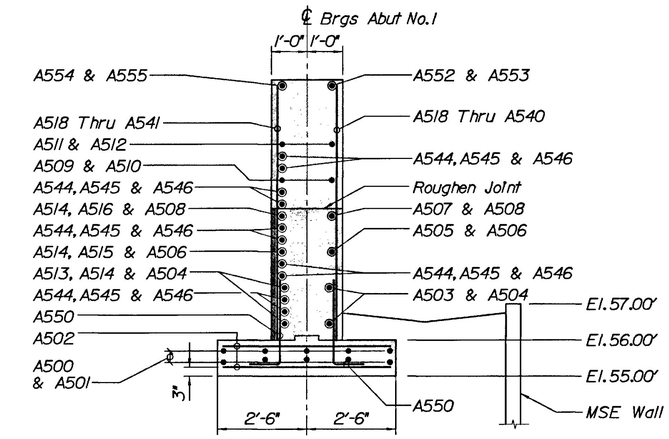

WING SECTION ABUTMENT NO.1

NOTE: Center A544 Rebar on Exterior Girder B8.

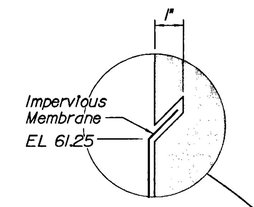

MEMBRANE REGLET DETAIL

Note: Terminate Reglet 3" Below Side Slope Finished Grade.

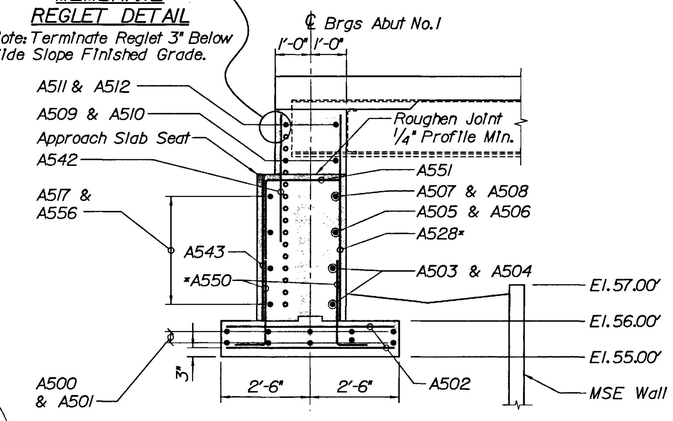

SECTION D-D

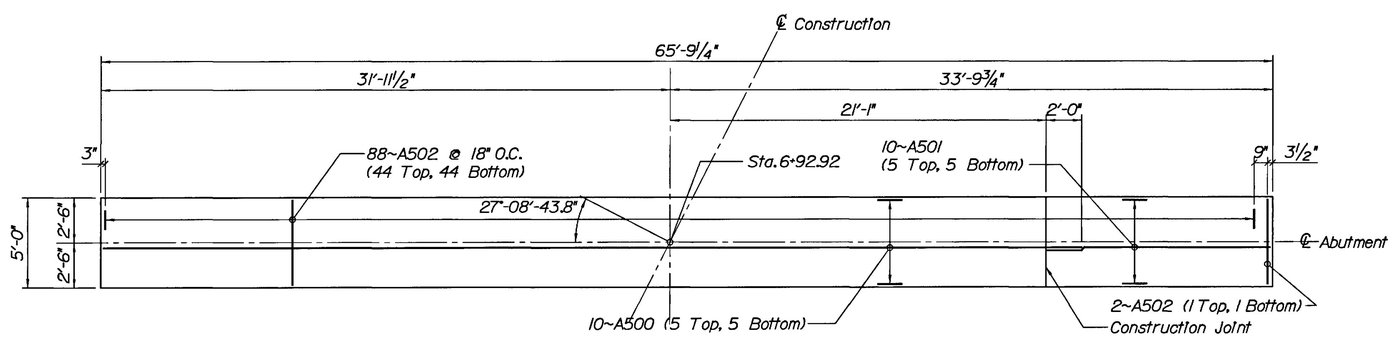

FOOTING PLAN - ABUTMENT NO.1

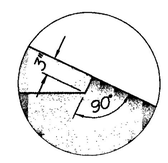

WING JOINT DETAIL

Refer to BD 501-93 for Approach Slab Details

Refer to Sheet 27 for Stringer Support Frame Details and Abutment Notes.

STATE OF MAINE
DEPARTMENT OF TRANSPORTATION

PLEASANT AVENUE CROSSING
OVER
B&M RAILROAD
IN THE TOWN OF
SCARBOROUGH
CUMBERLAND COUNTY
ABUTMENT NO. 1

AUGUSTA, MAINE

PROJECT DESIGN ENGINEER	EBC	BY	DATE
DESIGN-DETAILED	EBC	JCC	11-96
CHECKED	JAB		11-96
REVISIONS			
FIELD CHANGES			

PLANS

PIN 4783.00	F.H.W.A. REG. NO.	STATE	PROJECT NUMBER	SHEET NO.	TOTAL SHEETS
BRIDGE #3911	1	MAINE	BR-0527(1)X	28	47

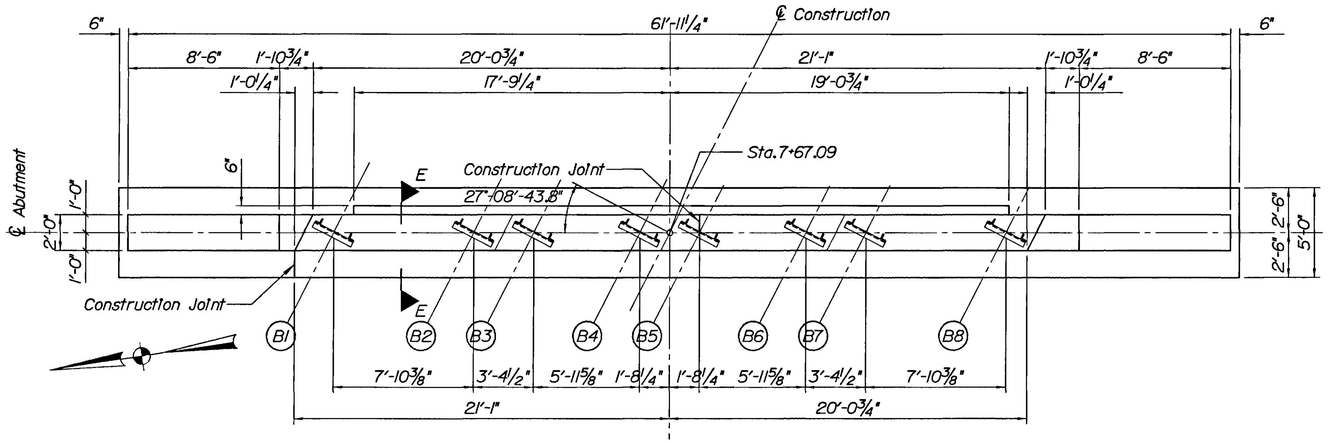

PLAN - ABUTMENT NO.2

ABUTMENT NOTES

1. Reinforcing steel shall have a 2-inch cover unless otherwise noted.
2. Protective Coating for Concrete Surfaces will be applied to the following areas:

   Top of concrete curbs.
   Top of abutment parapets.
3. Maximum calculated footing pressure is 1.0 tons per square foot.
4. Stringer support frames shall conform to ASTM A36 steel. Payment will be considered incidental to related contract items.
5. The Approach Slabs shall be cast-in place or precast concrete at the Contractor's option. Maximum width of precast sections shall be 8'-0". Submit precast details to Engineer. Payment for additional work required to modify approach slabs from cast-in place to precast concrete shall be incidental to Item 502.31.
6. Wings and parapets shall be placed after the superstructure is set.

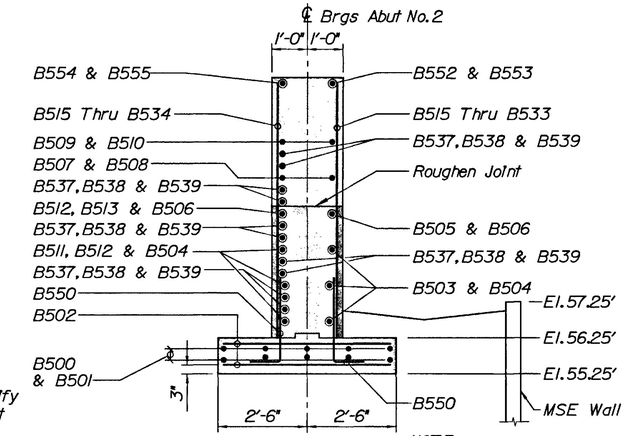

WING SECTION ABUTMENT NO.2

NOTE: Center B537 Rebar on Exterior Girder B8.

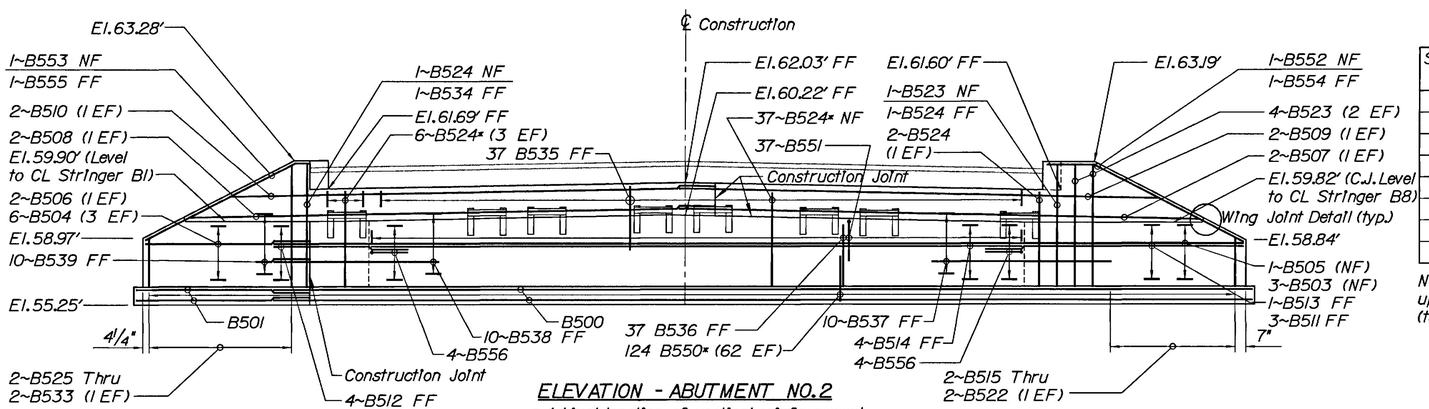

ELEVATION - ABUTMENT NO.2

* Adjust location of vertical reinforcement to clear stringers as directed by the Engineer.

ELEVATIONS

Stringer	Bridge Seat Abutment #1	Bridge Seat Abutment #2
B1	60.17	60.40
B2	60.35	60.53
B3	60.42	60.59
B4	60.56	60.69
B5	60.57	60.68
B6	60.48	60.56
B7	60.43	60.49
B8	60.30	60.32

NOTE: Bridge seat elevations are based upon a superstructure depth of 26⅞" (top of slab to bottom of steel).

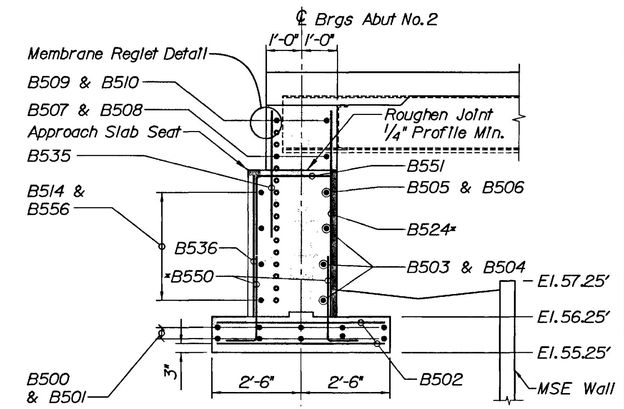

SECTION E-E

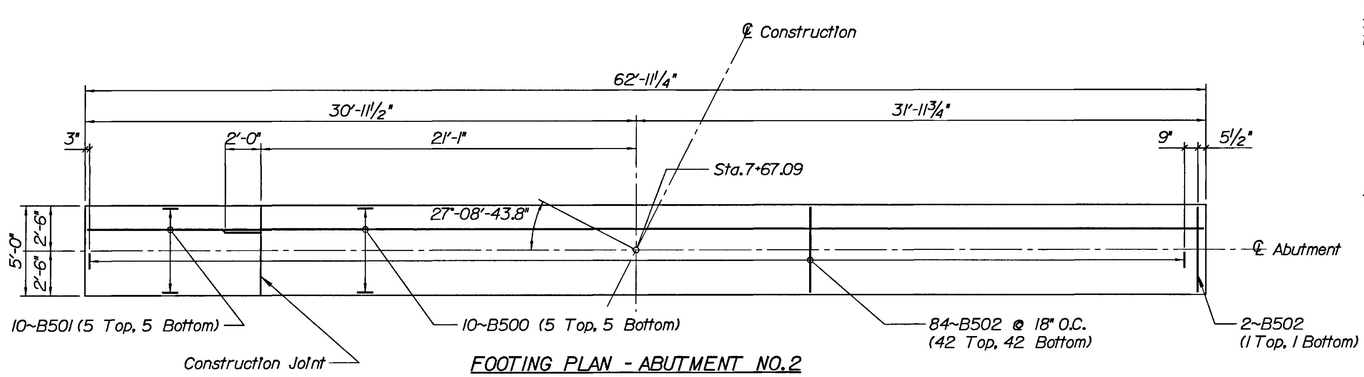

FOOTING PLAN - ABUTMENT NO.2

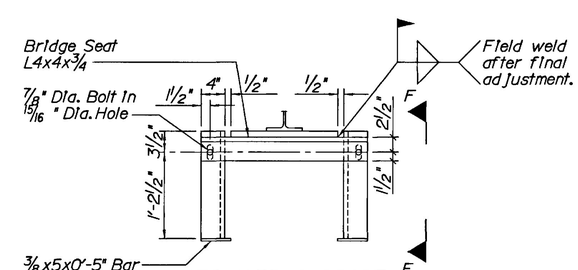

STRINGER SUPPORT FRAME DETAIL

Note:
Payment for Stringer Support shall be incidental to related contract items.

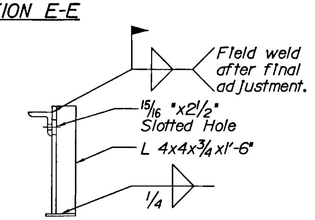

SECTION F-F

Refer to BD 501-93 for Approach Slab Details.
Refer to Sheet 26 for Wing Joint and Membrane Reglet Details.

STATE OF MAINE
DEPARTMENT OF TRANSPORTATION

PLEASANT AVENUE CROSSING
OVER
B&M RAILROAD
IN THE TOWN OF
SCARBOROUGH
CUMBERLAND COUNTY
ABUTMENT NO. 2

AUGUSTA, MAINE

PROJECT DESIGN ENGINEER	EBC	BY		DATE
DESIGN-DETAILED	EBC	JCC		11-96
CHECKED	JAB			11-96
REVISIONS				
FIELD CHANGES				

PLANS

PIN 4783.00	F.H.W.A. REG. NO.	STATE	PROJECT NUMBER	SHEET NO.	TOTAL SHEETS
BRIDGE #3911	1	MAINE	BR-0527(1)X	29	47

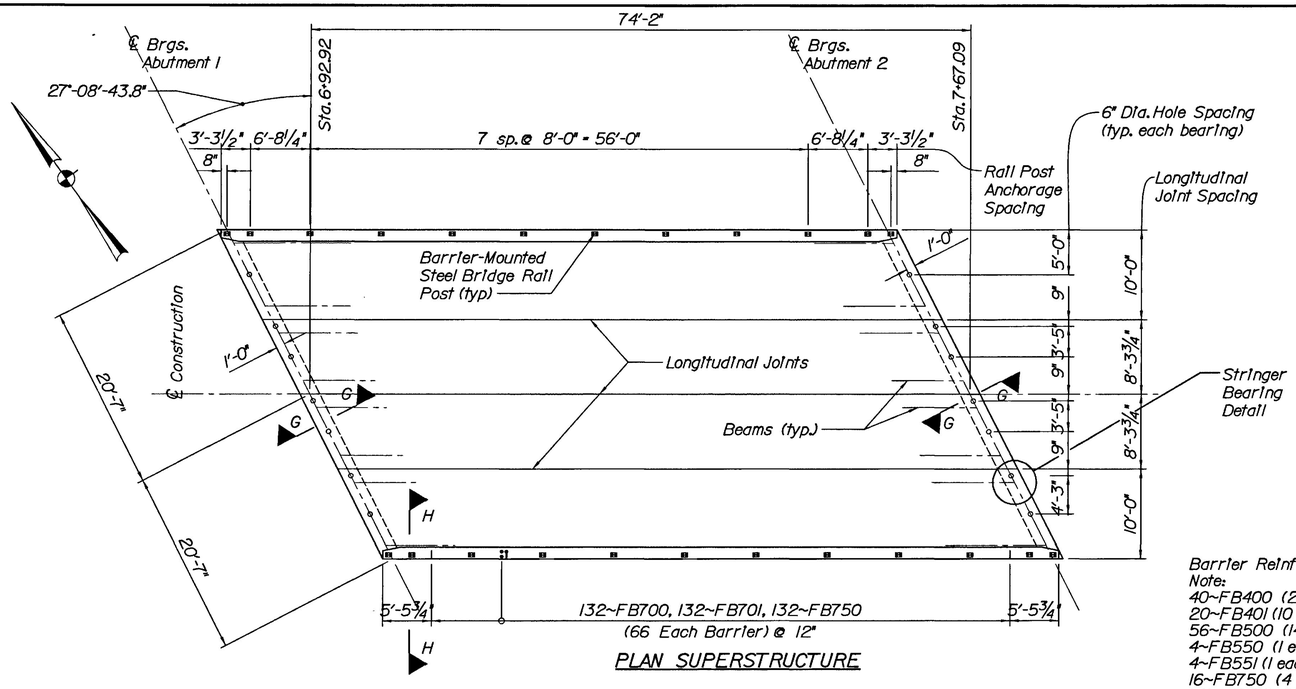

PLAN SUPERSTRUCTURE

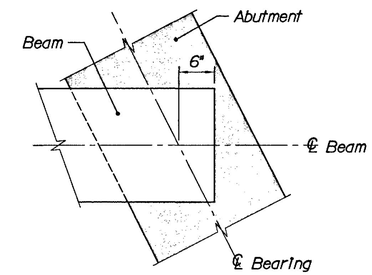

STRINGER BEARING DETAIL

Barrier Reinforcement
Note:
40~FB400 (20 each barrier)
20~FB401 (10 each barrier, splice to FB400)
56~FB500 (14 each corner)
4~FB550 (1 each corner)
4~FB551 (1 each corner)
16~FB750 (4 each corner)
36~FB700 (9 each corner)
16~FB701 (4 each corner)
20~FB702 (5 each corner)

SUPERSTRUCTURE NOTES

1. Form a 1" V-groove on the fascias at the horizontal joint between the curb and slab.
2. Reinforcing steel shall have a minimum cover of 2" unless otherwise indicated.
3. The superstructure slab concrete shall be placed in one continuous operation and the concrete shall be kept plastic until the placement is completed.
4. Protective coating for concrete surfaces shall be applied to the following areas:

   Barrier Faces
   Fascia down to the drip notch.
5. All barrier concrete shall contain a Silica Fume Additive.
6. Maximum depth of superstructure (top of slab to bottom of steel) shall be 2'-4".

BASIC DESIGN STRESSES

STRUCTURAL STEEL: AASHTO M270 Grade 50W Fy=50,000 psi
ASTM A325 Fv=25,000 psi

MATERIALS

STRUCTURAL STEEL: All Material (Except as otherwise noted) AASHTO M270, Grade 50W (unpainted)
High Strength Bolts ASTM A325 - Type 3

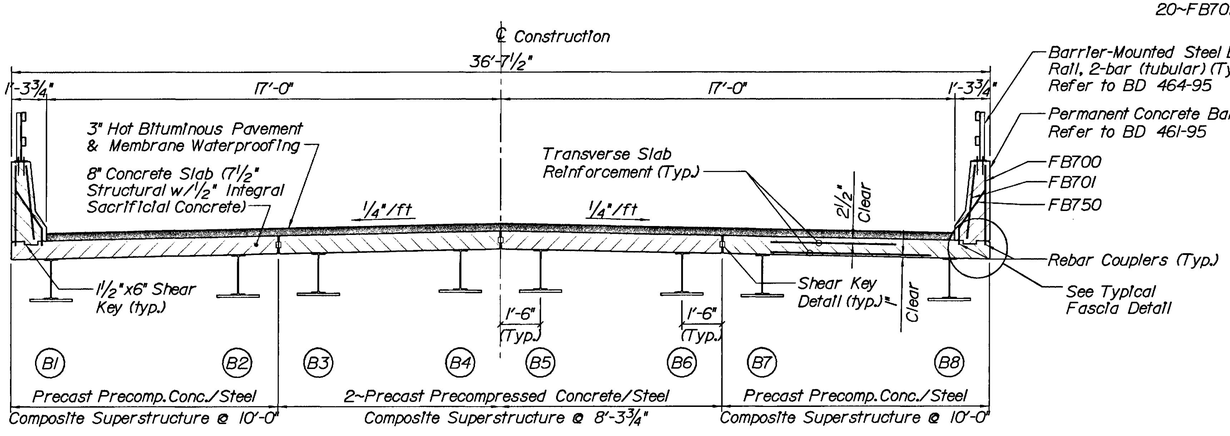

TRANSVERSE SECTION

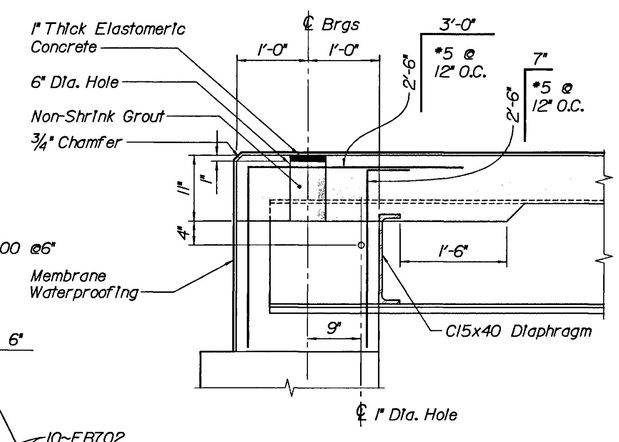

SECTION G-G

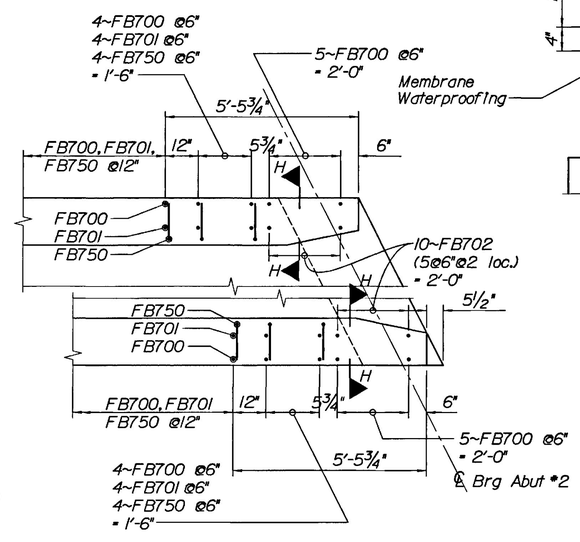

BARRIER PLAN
ABUTMENT #2
(Abutment #1 similar)

Refer to Sheet BD 461-95 for Barrier Reinforcing Not Shown.

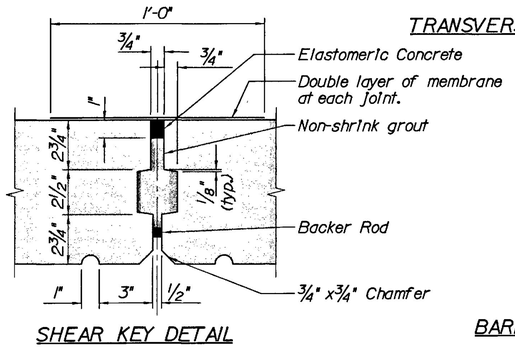

SHEAR KEY DETAIL

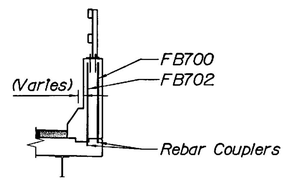

BARRIER SECTION H-H

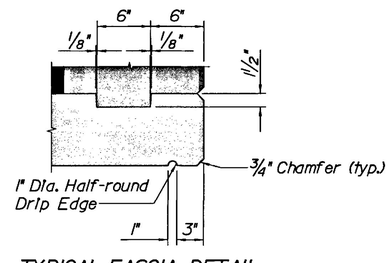

TYPICAL FASCIA DETAIL

PROJECT DESIGN ENGINEER	EBC	BY	JCC	DATE	11-96
DESIGN-DETAILED	EBC				
CHECKED	JAB				11-96
REVISIONS					
FIELD CHANGES					

PLANS

STATE OF MAINE
DEPARTMENT OF TRANSPORTATION

PLEASANT AVENUE CROSSING
OVER
BOSTON & MAINE RAILROAD
IN THE TOWN OF
SCARBOROUGH
CUMBERLAND COUNTY
SUPERSTRUCTURE

AUGUSTA, MAINE

PIN 4783.00	F.H.W.A. REG. NO.	STATE	PROJECT NUMBER	SHEET NO.	TOTAL SHEETS
BRIDGE #3911	1	MAINE	BR-0527(1)X	30	47

REINFORCING STEEL SCHEDULE

STRAIGHT BARS

MARK	NO.	LENGTH	LOCATION
ABUTMENT NO. 1			
A500	10	54'-11"	Footing
A501	10	12'-6"	Footing
A502	90	4'-8"	Footing
A503	2	54'-5"	South Wing
A504	4	12'-0"	North Wing
A505	1	54'-2"	South Wing
A506	2	11'-8"	North Wing
A507	1	52'-2"	South Wing
A508	2	9'-5"	North Wing
A509	2	28'-4"	South Wing
A510	2	31'-4"	North Wing
A511	2	26'-1"	South Wing
A512	2	28'-10"	North Wing
A513	2	15'-9"	South Wing
A514	4	6'-3"	North Wing
A515	1	15'-6"	South Wing
A516	1	13'-6"	South Wing
A517	4	36'-6"	App. Slab Seat
A518	2	2'-5"	South Wing
A519	2	2'-11"	South Wing
A520	2	3'-5"	South Wing
A521	2	3'-11"	South Wing
A522	2	4'-5"	South Wing
A523	2	4'-11"	South Wing
A524	2	5'-5"	South Wing
A525	2	5'-11"	South Wing
A526	2	6'-5"	South Wing
A527	2	6'-11"	South Wing
A528	44	5'-4"	Breastwall
A529	3	5'-3"	South Wing
A530	5	6'-10"	South Wing
A531	2	6'-5"	North Wing
A532	2	5'-11"	North Wing
A533	2	5'-6"	North Wing
A534	2	5'-1"	North Wing
A535	2	4'-7"	North Wing
A536	2	4'-2"	North Wing
A537	2	3'-8"	North Wing
A538	2	3'-3"	North Wing
A539	2	2'-10"	North Wing
A540	2	2'-4"	North Wing
A541	1	7'-0"	South Wing
A542	1	3'-6"	Breastwall
A543	37	3'-6"	App. Slab Seat
A544	10	10'-0"	South Wing
A545	10	9'-3"	North Wing
A546	10	3'-0"	North Wing

MARK	NO.	LENGTH	LOCATION
ABUTMENT NO. 2			
B500	10	54'-11"	Footing
B501	10	9'-8"	Footing
B502	86	4'-8"	Footing
B503	3	54'-5"	South Wing
B504	6	9'-2"	North Wing
B505	1	52'-8"	South Wing
B506	2	7'-8"	North Wing
B507	2	29'-3"	South Wing
B508	2	29'-6"	North Wing
B509	2	26'-11"	South Wing
B510	2	27'-3"	North Wing
B511	3	14'-6"	South Wing
B512	4	7'-6"	North Wing
B513	1	12'-8"	South Wing
B514	4	36'-6"	App. Slab Seat
B515	2	6'-3"	South Wing
B516	2	5'-9"	South Wing
B517	2	5'-3"	South Wing
B518	2	4'-9"	South Wing
B519	2	4'-3"	South Wing
B520	2	3'-8"	South Wing
B521	2	3'-2"	South Wing
B522	2	2'-8"	South Wing
B523	5	6'-9"	South Wing
B524	47	5'-2"	Breastwall
B525	2	2'-8"	North Wing
B526	2	3'-2"	North Wing
B527	2	3'-8"	North Wing
B528	2	4'-2"	North Wing
B529	2	4'-9"	North Wing
B530	2	5'-3"	North Wing
B531	2	5'-9"	North Wing
B532	2	6'-3"	North Wing
B533	2	6'-9"	North Wing
B534	1	6'-10"	North Wing
B535	37	3'-6"	Breastwall
B536	37	3'-5"	App. Slab Seat
B537	10	10'-0"	South Wing
B538	10	9'-3"	North Wing
B539	10	3'-0"	North Wing

MARK	NO.	LENGTH	LOCATION
APPROACH SLAB			
AS400	32	30'-0"	App Slabs
AS401	32	8'-5"	App Slabs
AS600	132	15'-2"	App Slabs
BARRIER			
FB400	40	30'-0"	Middle
FB401	20	13'-8"	Middle
FB500	56	4'-6"	Ends
FB700	168	2'-11" *	Barrier
FB701	148	2'-9"	Barrier
FB702	20	3'-0" *	Barrier

BENT BARS

MARK	NO.	LENGTH	TYPE	A	B	C	D	E	F	G	H	O	R	LOCATION
ABUTMENT NO. 1														
A550	130	3'-3"	L	10"	2'-5"	-	-	-	-	-	-	-	-	Footing Dowel
A551	37	4'-4"	L	2'-2"	2'-2"	-	-	-	-	-	-	-	-	App. Slab Seat
A552	1	11'-2 1/2"	V	-	-	-	8 3/4"	10'-5 3/4"	-	-	4'-8 1/4"	-	-	South Wing
A553	1	13'-9 5/8"	V	-	-	-	2'-7 3/8"	11'-2 1/4"	-	-	4'-7"	-	-	North Wing
A554	1	12'-0 3/4"	V	-	-	-	1'-7"	10'-5 3/4"	-	-	4'-8 1/4"	-	-	South Wing
A555	1	12'-11 3/8"	V	-	-	-	1'-9 1/8"	11'-2 1/4"	-	-	4'-7"	-	-	North Wing
A556	8	4'-0"	L	2'-0"	2'-0"	-	-	-	-	-	-	-	-	App. Slab Seat
ABUTMENT NO. 2														
B550	124	3'-3"	L	10"	2'-5"	-	-	-	-	-	-	-	-	Footing Dowel
B551	37	4'-4"	L	2'-2"	2'-2"	-	-	-	-	-	-	-	-	App. Slab Seat
B552	1	12'-0 1/4"	V	-	-	-	2'-7 1/4"	9'-5"	-	-	4'-3 1/2"	-	-	South Wing
B553	1	10'-1 1/2"	V	-	-	-	8 3/4"	9'-4 3/4"	-	-	4'-3"	-	-	North Wing
B554	1	11'-2"	V	-	-	-	1'-9"	9'-5"	-	-	4'-3 1/2"	-	-	South Wing
B555	1	10'-11 3/4"	V	-	-	-	1'-7"	9'-4 3/4"	-	-	4'-3"	-	-	North Wing
B556	8	4'-0"	L	2'-0"	2'-0"	-	-	-	-	-	-	-	-	App. Slab Seat
BARRIER														
FB550	4	4'-7"	V	-	-	-	2'-8"	1'-11"	-	-	5 1/4"	-	-	Ends
FB551	4	4'-7"	V	-	-	-	4'-0"	7"	-	-	2"	-	-	Ends
FB750	148	2'-3 5/8"	V	-	-	-	7 1/8" *	1'-8 1/2"	-	-	1'-0"	-	-	Barrier

TYPE-BENDING DIAGRAMS

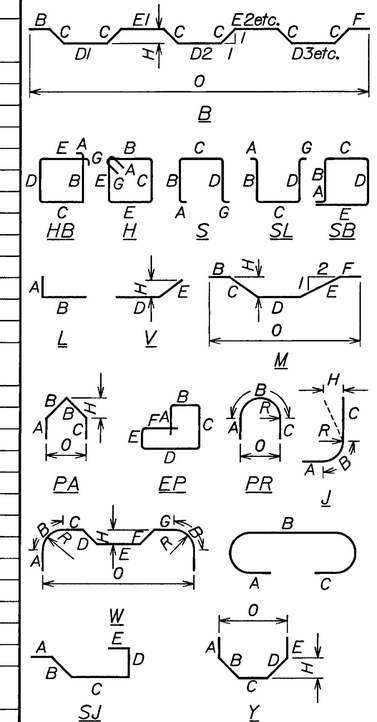

All dimensions are out to out of reinforcing bar.

Bending details and hooks shall conform to the recommendations of the current revision of ACI Standard 318.

Reinforcing Bar: ASTM A615 Grade 60.

GENERAL NOTES

1. First digit(s) following the letter of the mark indicates size of the bar:
   Mark (A502) bar size #5
   Mark (P1001) bar size #10
   Mark (S603) bar size #6
2. Each truss bar, Type B, may be replaced by two (2) straight bars (one top and one bottom) of the same bar size as the truss bar. Payment in either case shall be based on truss bars as scheduled on plans.

* Thread end of bar 1 1/2" for connection to slab inserts.

STATE OF MAINE
DEPARTMENT OF TRANSPORTATION

PLEASANT AVENUE
CROSSING
OVER
BOSTON & MAINE RAILROAD
IN THE TOWN OF
SCARBOROUGH
CUMBERLAND COUNTY

REINFORCING STEEL

AUGUSTA, MAINE

PROJECT DESIGN ENGINEER	EBC
DESIGN-DETAILED	EBC
CHECKED	JAB
REVISIONS	
FIELD CHANGES	

PLANS

BY	DATE
JCC	11-96
	11-96