FHWA REG NO	STATE	PROJECT NUMBER	SHEET NO	TOTAL SHEETS
1	MAINE	Bridge#5396	1	1

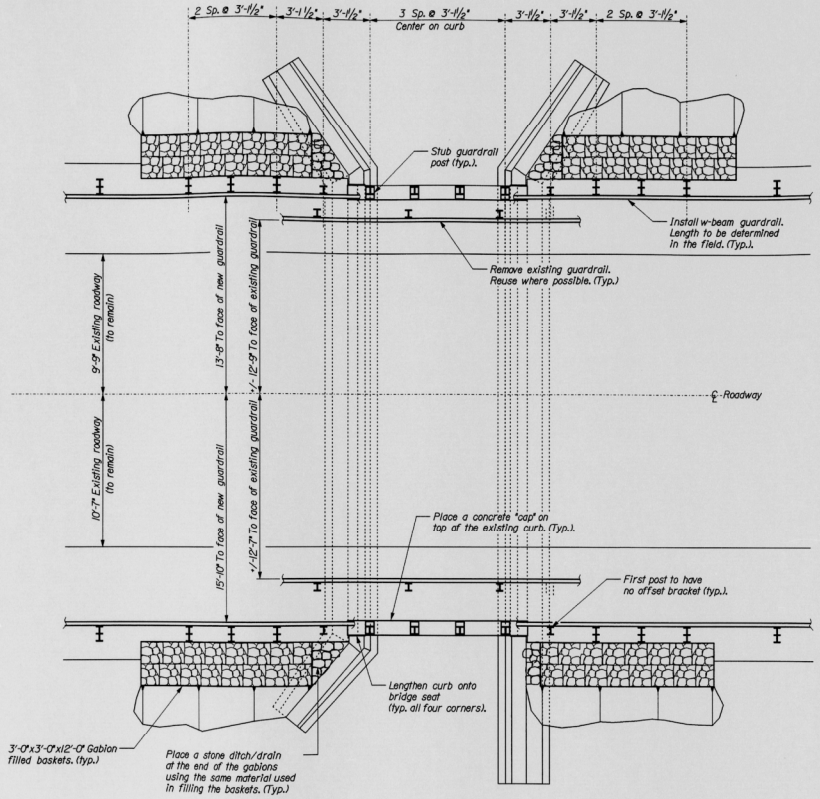

PLAN VIEW

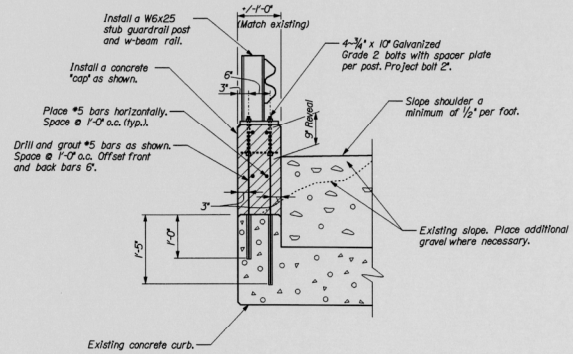

TYPICAL SECTION THRU CURB

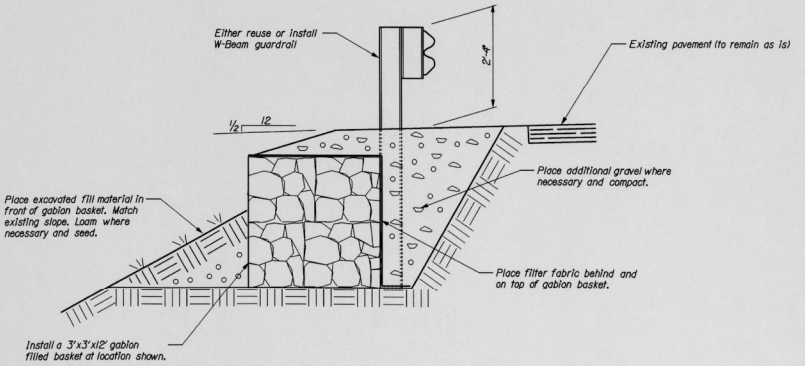

TYPICAL SECTION AT APPROACH ROADWAY

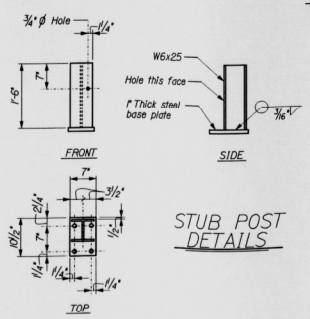

STUB POST DETAILS

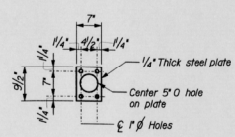

SPACER PLATE DETAIL

GENERAL NOTES

1...Reinforcing steel to have a minimum of 2" of cover.

2...Chamfer all exposed edges of concrete ¾".

Assent to B. Rocklitt 7/8/03

148-277

STATE OF MAINE
DEPARTMENT OF TRANSPORTATION

LEWIS BRIDGE
OVER
CATHANCE STREAM
IN THE TOWN OF
BOWDOIN
SAGADAHOC COUNTY

GUARDRAIL INSTALLATION

SHEET 1 OF 1 AUGUSTA, MAINE June 2003

PROJECT DESIGN ENGINEER		BY	DATE
PLANS	DESIGN DETAILED	L.S.Benner	6/03
	CHECKED		
	REVISIONS		
	FIELD CHANGES		

Filename: ...\bowdoin5396.dgn Division: MAINT Username: lewis.benner Date:7/7/2003