STATE OF MAINE
DEPARTMENT OF TRANSPORTATION
16 STATE HOUSE STATION
AUGUSTA, MAINE 04333-0016

Janet T. Mills
GOVERNOR

Bruce A. Van Note
COMMISSIONER

June 27, 2022
Subject: Matinicus Island Ferry Replacement
State WIN: 024897.10
Location: **Rockland**
Amendment No. 3

Dear Sir/Ms.:

Please make the following changes to the Bid Documents:

In the Bid Book:

CHANGE from Amendment No. 1, the bid opening date from "July 6, 2022" to read "**July 20, 2022**". Make this change in pen and ink.

The following questions have been received:

Question: The latest bid amendment (ba024897 .1Ob) outlines a change to Special Provision Section 107 stating that the Notice to Proceed (NTP) would be issued December 1, 2022. The original contract documents state that after bid opening there is a 20-day period for apparent low bidder to submit bidder qualifications, an unspecified review time for Maine DOT to review documents, a contract award, then no later than 30 days after contract award a kickoff meeting where a NTP would be granted. This notional timeline we estimated at approximately 65 to 80 days after bid opening, whereas the new amendment indicates 140 to 150 day period prior to NTP. Given the current uncertainties within the economy our subcontractors / vendors are validating quotes for a period of only 65 to 80 days. Is it the State of Maine DOT's intentions to (1) establish a review time for proposal documents submitted by apparent low bidder; and (2) with the break in linkage between the kickoff meeting and the NTP, award the contract immediately after acceptance of proposal and well ahead of the newly prescribed NTP date as to prevent subcontractor proposal validity dates from expiring and ultimately aid in the reduction of risk to the shipbuilder.

Response: Bid amendment 2 allows for additional time to deliver the vessel and accommodate a request from a bidder with a high workload. At the Shipyard's request, the Department will provide a Notice to Proceed to be effective immediately after the kickoff meeting and adjust the Delivery Date accordingly.
Following the bid opening, prompt submittal of documents required per the Bidding Instructions will accelerate the time period to award the contract to the lowest and responsive bidder.

Question: On contract specification (D367-T8) page 52 & 53 in section 331.1 Railing & Bulwarks it calls out 32 each Eaton Vienza Marine Deck Lights Or equal. These lights are no longer available so is there a preferred light you would Like to use or do we need to submit an equal?

Response: We have confirmed that Eaton Vienza Marine Deck Light is no longer commercially available. Per 46 CFR 111.75-20 a substitute must be in compliance with the UL 1598A standard. Please use Phoenix Lighting Wayfinder LED Accessway light or Red Sky Lighting Round Series LED fixture as a substitute. The specific model shall be approved by the Resident and MSFS. The deck lighting shall not interfere with vehicles on the main deck. Please see the attached two documents for reference purposes only for Phoenix Lighting Wayfinder LED Accessway light, and Red Sky Lighting Round Series LED fixture.

Question: We are requesting an extension to the bid submittal date to be moved from July 6 2022 to July 20 2022.

Response: See above changes to Notice to Contractors. The bid opening has been moved to July 20, 2022.

Consider these changes and information prior to submitting your bid on **July 20, 2022**.

Sincerely,

Kevin Hanlon for

George M. A. Macdougall P.E.
Contracts & Specifications Engineer

PHOENIX®
DURABILITY X DESIGN™

Wayfinder™

LED Accessway Light

Patent Pending

- Delivers up to 1100 lumens to walkways, stairways and other small areas
- Superior customized optics
- Emergency battery backup (EMB) option
- Rugged construction with a contemporary design
- LED technology increases efficiency, eliminates maintenance and supports sustainable operations

Key Applications

Stairways
Tunnels
Accessways
Walkways & bridges
Elevator pits
Under catwalks
Deck lighting
Platforms
Emergency backup lighting

Compliances

ETL/cETL Listed *(standard fixture)* to:
- UL 1598 Suitable for Wet Locations
- UL 1598A Marine Outside Type (Saltwater)
- CSA C22.2 No. 250.0

ETL/cETL Listed *(fixture with EMB option)* to:
- UL 924
- CSA STD C22.2 No. 141

CE
ABS
IP66 rated
LM79 and LM80 reports available

For IES files, see website or contact factory

Specifications

Construction	Cast aluminum housing
Finish	Thermoset powder coat
Hardware	Marine grade (316) stainless steel
Lens	Clear polycarbonate, impact-resistant, UV resistant - standard Diffuse polycarbonate (DP), impact-resistant, UV resistant - optional
Light source	9W, up to 1100 lumens CRI ≥ 70 CCT 5000K - standard CCT 4000K - contact factory for availability 50,000 hour rated life
Power source	120-277V, 50-60Hz (unswitched source required for EMB option) 4kV surge protection
Wiring	72 in (1828 mm) cord with pigtail (CD) - optional Continuous row mounting (TW) - optional
EMB	Input power 120-277V, 50-60Hz Up to 15 watts (charging) 2HR (standard) minimum 120 minutes run time - Approximately 400 lumens - Maximum height 8.11 feet 6HR (optional) minimum 360 minutes run time - Approximately 250 lumens - Maximum height 5.00 feet
Battery	7.4V, 2500 mAh, Lithium-Ion 24 hour charge time (Li-Ion)
Ambient operating temperature	-40°C to +50°C - standard 0°C to +50°C - EMB option Contact factory for lower ambient temperature option
Fixture weight	4.0 lb (1.8 kg)
Warranty	5 years

Phoenix Lighting 8711 West Port Avenue Milwaukee, WI 53224 USA
Phone: +1 414.973.3300 Toll Free: 800.438.1214 **www.phoenixlighting.com**

Wayfinder™

LED Accessway Light

Dimensions

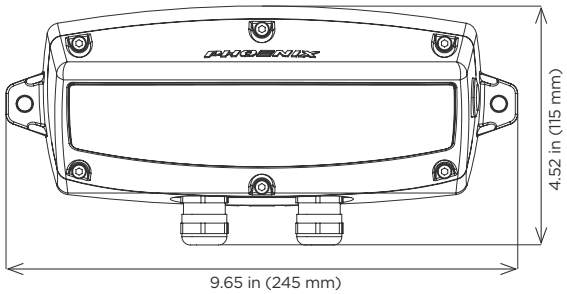

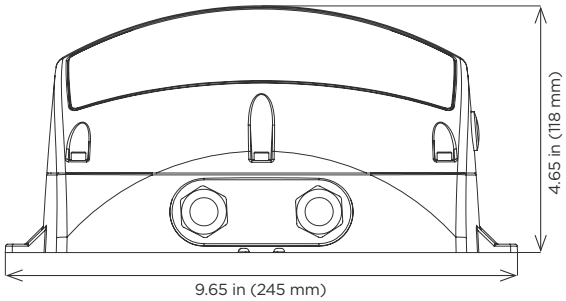

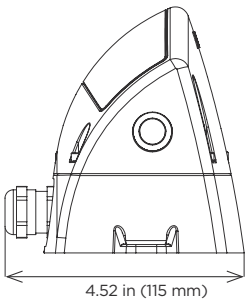

Mounting

Surface Mount

Comes standard with fixture

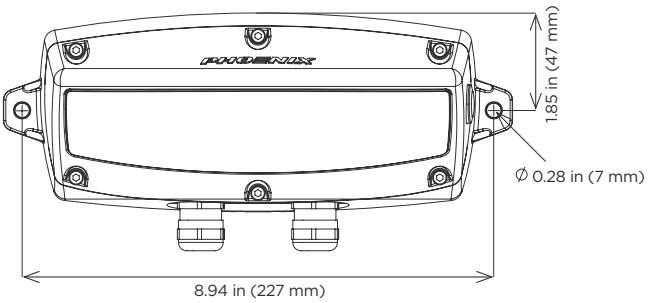

Bracket Mount

Comes standard with fixture,
2 x M6 threaded holes on
back of fixture

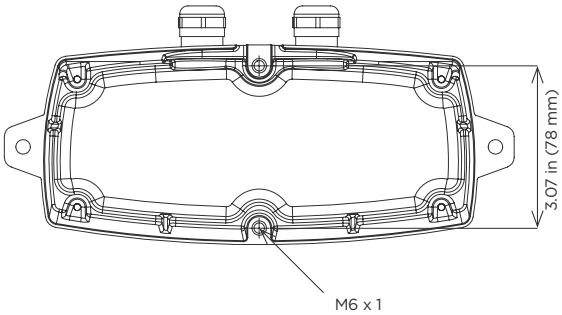

Phoenix Lighting 8711 West Port Avenue Milwaukee, WI 53224 USA
Phone: +1 414.973.3300 Toll Free: 800.438.1214 **www.phoenixlighting.com**

Ordering Information

Example: WF-10LED-DP-CD

Fixture	Wattage	Lens	Wiring	Options
WF	10LED	DP [2]	CD	EMB [1]
			TW	EMB-6HR [3]

Wattage/Type

10LED 9W, up to 1100 lumens

Lens

DP [2] Diffuse polycarbonate

Wiring

CD 72 inch (1828 mm) cord with pigtail - standard

TW Continuous row mounting (TW) provided on all fixtures, install blanking plug (provided) when second cord grip not required

Options

EMB [1] Emergency battery backup

EMB-6HR [3] Emergency Long Duration Battery backup (6 hours)

Notes

1 Contact factory

2 Clear polycarbonate lens is standard, not available with EMB-6HR option

3 Maximum mounting height allowed is 5.0 feet

Special Projects: We may be able to accommodate your special projects, so please don't hesitate to ask about additional options. Minimum order quantities and/or extended lead times will apply. Contact your Phoenix representative with specific inquiries.

Accessories (order separately)

Safety Cable

available upon request

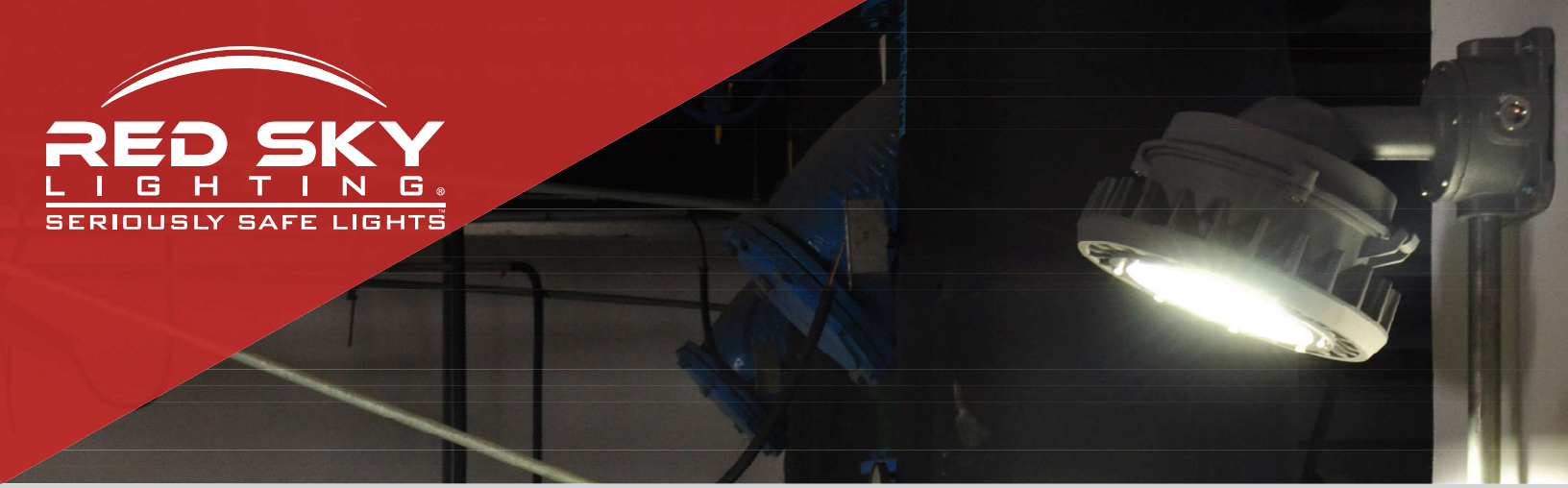

Round Series

A compact, lightweight LED fixture that packs a powerful punch. This industry favorite has seven mounting options and produces 150 lumens per watt. Best utilized in harsh and hazardous environments for marine, power, and chemical industries.

Certifications and Ratings

Class I Division 2, Groups A,B,C,D
Class II Division 1, Groups E,F,G
Class II Division 2, Groups F,G
Class III Division 1
CSA C22.2 No. 137-M1981; 25-1966
CSA C22.2 No. 250.0-08; 250.13
UL 844 Hazardous Location
UL 1598A Marine Vessels
UL 1598 Wet Locations
UL 8750 LED Safety
IP66
DLC (Contact Us)
ABS (pending)

Pictured with 25° Stanchion Mount

Dimensions

A	B
10.3/262	6.1/155

Units of Measure: in/mm

Weight

8.8lb / 4.0kg

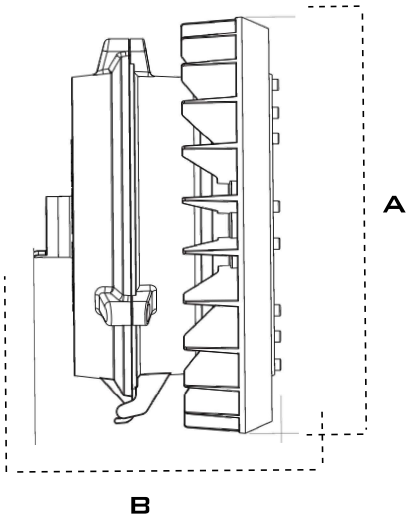

Specifications

Voltage/Frequency	AC100-277V 50/60HZ AC200-480V 50/60HZ*
Power Factor	≥95% @120V
THD	<20%
Surge Protection	4KvA
Ambient Temperature	-40°F to 131°F (-40°C to 55°C)
T-Code Ratings	Class I Division 2 - T4A Class II Division 1 - T5 Class II Division 2 - T5
Construction	Die-cast Aluminum
Lens Material	Tempered Glass
Hardware	Marine Grade Stainless Steel
Finish	Thermoset Powdercoat
Connection	3/4" NPT
Power	40W* ; 45W 60W* ; 65W
Lumen Output	6,760Lm 10,030Lm
Beam Angle	110°
Color Rendering Index	Ra>70
L70	>50,000 Hours
Warranty	LEDs: 10 Years Driver: 7 Years

1 (833) 4REDSKY info@redskylighting.com www.redskylighting.com
410 Main Street Racine, WI, 53403 USA Red Sky Lighting LLC

Order Information

Round Series

EXAMPLE: RND-45-100-277-5000K-CLR-GREY-PEND

RND	45	100-277	5000K	CLR	GREY	PEND
Fixture	Wattage	Voltage	CCT	Lens	Color	Mounting
	45W	100-277	5000K	Clear	Grey	Pendant
	65W	200-480*	4000K	Diffuse		Yoke
	40W*			Globe		Ceiling
	60W*					Stan25
						Stan90
						Wall25
						Wall90

*480V only available in 40W and 60W
*40W and 60W only available in 480V

Accessories

SFCB: Safety Cable Kit
WG: Flat Lens Wire Guard
WGG: Globe Lens Wire guard
SP1: 10kA Surge Protector

Photometrics

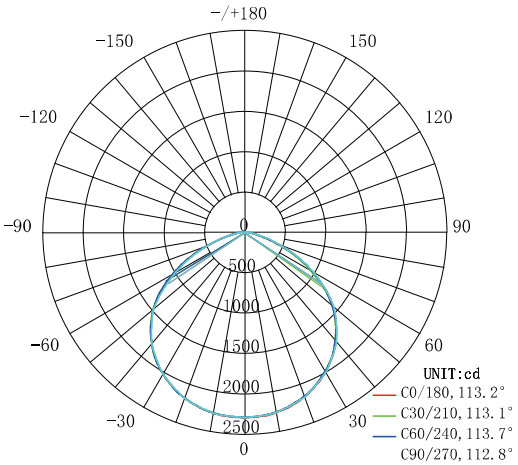

AVERAGE BEAM ANGLE(50%):113.2 DEG

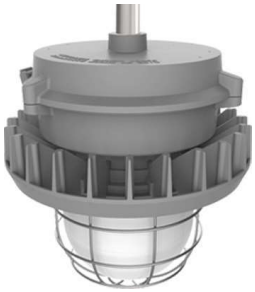

Pendant with Globe Lens

Yoke Mount with Globe Lens

Pendant

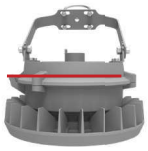

Yoke

Ceiling

Stanchion 90

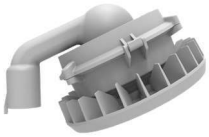

Stanchion 25

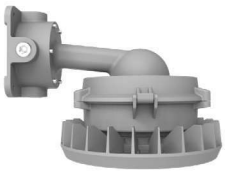

Wall 90

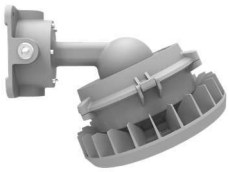

Wall 25

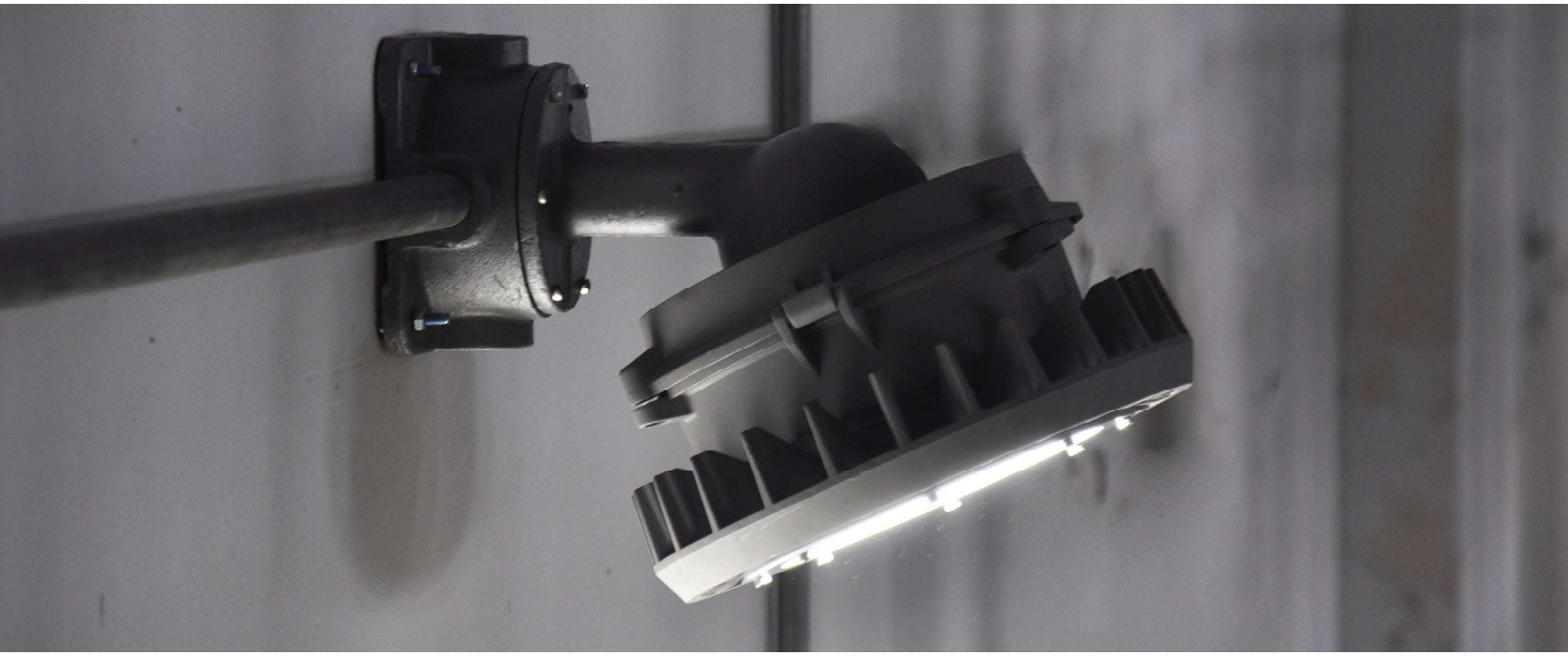

1 (833) 4REDSKY info@redskylighting.com www.redskylighting.com
410 Main Street Racine, WI, 53403 USA Red Sky Lighting LLC

Product design and specification is subject to change without notice. See website for most up to date version.
© 2019 Red Sky Lighting LLC All Rights Reserved