# WOODLAND PULP LLC

# ELECTRICAL

# CABLE AND WIRE

# INSTALLATION

# SPECIFICATIONS

# SECTION

**CABLE AND WIRE**

***General***

**A. <u>Any deviation from these standards must be approved by E&I management</u>**

B. All wire shall be delivered to the site in original cartons and each coil or reel shall bear a tag containing the underwriters' approval stamp, name of manufacturer, trade name of wire, month and year when manufactured. Any wire more than one year old, at the time of installation, shall be visually inspected and meggered prior to use.

C. Materials to be received by the Mill shall be clearly identified with the contact information.

D. All conductors shall be annealed copper, Class B strand per ASTM B-8.

E. All multiconductor power cable shall have bare ground wires cabled into the interstices. Maximum of three wires shall be provided.

F. Each cable shall be marked with the manufacture's name, rated voltage, conductor size, Type and UL label. Conductors shall be color coded or identified with printed numerals "1", "2", and "3".

G. All cables shall have demonstrated resistance to flame propagation in fires by having been type tested without having failed the vertical tray flame test in UL 1685 using the FT4/IEEE 1202 flame exposure

H. Cable shall be suitable for wet and dry locations installed in cable tray.

I. Cable shall be Low Smoke Zero Halogen Insulation, or a Woodland pulp E/I management or Woodland Pulp Electrical Project Engineer approved equal.

J. Cable shall meet or exceed complete Woodland Pulp Electrical Cable and Wire Specification.

K. Whenever possible cable should be Type MC, Aluminum Interlocked Armor.

L. If firestop is removed as part of a cable installation, new firestop shall be installed to seal the connection and make it watertight again

**M. Any wire manufacturer that meets these specifications would be considered acceptable unless noted otherwise**

***5000 Volt Power Cable***

A. Insulation shall be Ethylene-Propylene Rubber (EPR) 133 percent insulation level rated for 105$^{o}$ C operation rating.

B. Cable shall be Non shield Type MV-105 and Type MC, Aluminum Interlocked Armor.

C. Conductors shall be provided with an extruded semiconductor strand screen.

D. Overall jacket shall be YELLOW.

***600 Volt Power Cable***

A. Insulation shall be Type XHHW-2 with 90$^{o}$ C continuous rating.

B. Conductors shall be minimum No. 12 AWG or as sized on the Drawings, insulated with Type XHHW/XLP insulation.

C. All multiconductor power cable shall have bare ground wires cabled into the interstices. Maximum of three wires shall be provided.

D. Overall jacket shall be BLACK.

N. Refer to drive standards for Variable Frequency Drive Cable Standards
   a. "AC Variable Frequency Drive Cables shall have minimum voltage rating of 1000V, 3 bare ground wires, and a continuous aluminum sheath or a Woodland pulp E/I management or Woodland Pulp Electrical Project Engineer approved equal."

E. Whenever possible cable should be Type MC, Aluminum Interlocked Armor.

***600 Volt Control Cable***

A. Control cable shall be multiconductor consisting of the requisite number of conductors as shown on the Drawings.

B. Conductors shall be minimum No. 16 AWG or as sized on the Drawings, insulated with Type XHHW-2/XLP insulation.

C. A grounding conductor shall be provided in the cable assembly.

D. Overall jacket shall be colored BLACK.

E. Conductors shall be color-coded in accordance with ICEA Method 1 Table K-2.

***600 Volt Wire***

A. Single conductor wire shall be Type XHHW-2 or MW-MIL-W-76C-PVC.

B. Panel Wiring may be Type MTW/TEW/THHN $90^0$ deg C

C. The wire shall be tinned copper and rated for a minimum of 1000V.

D. The wire shall be manufactured by Belden or a Woodland pulp E/I management approved equal.
   a. (Belden trade number 8521, #16 AWG, 8520, #14 AWG, or 8527, #12 AWG)

E. ***The following control wiring color code shall be used:***
   a. ***DC***
      i. DC Power shall be Blue
      ii. DC Common shall be White with Blue Trace
   b. ***AC***
      i. AC Power shall be Red
      ii. AC Neutral shall be White with Red Trace
   c. ***GROUNDS***
      i. Grounded conductors shall be Green, Green with Yellow Trace, or where multi conductor cables are used in entrance orange or bare will be the ground.

d. Where factory supplied cables are not used Analog Signal wiring between DCS or PLC I/O and field terminal blocks shall be Slate or Gray or Woodland Pulp E/I management or Woodland Pulp Electrical Project Engineer approved alternative.

***Instrumentation Cable***

A. Cable assemblies shall be UL listed with an overall flame retardant, sunlight resistant jacket. Fillers shall be flame resistant, non-hygroscopic and non-wicking.

B. Instrument cable shall be single or multi pair consisting of the requisite number of pairs as shown on the Drawings.

C. Pairs shall be shielded with individual drain wire and overall PVC jacket.

D. Conductors shall be No. 16 AWG or as sized on the Drawings, insulated with Type XHHW/XLP insulation. Conductors shall be rated for 600 volts.

E. Overall jacket shall be BLACK.

***Conductors shall be colored as follows:***

A. Twisted Pairs – Red and Black or White and Black
   a. Black shall ALWAYS be negative

B. Triads – White, Black, and Red
   a. Whites match

C. Group – Each conductor pair (or triad) of a multi-group cable sequentially numbered

***Allen Bradley Data-Highway cable***

A. Base cable will be Belden 9463 (A-B 1770 CD) with a galvanized interlocked armor with an overall flame retardant, sunlight resistant jacket. Fillers shall be flame resistant, not hygroscopic and non-wicking. Overall jacket shall be BLUE.

***Ethernet Cabling***

A. Ethernet cabling will be of a category 6A type capable of frequencies up to 500Mhz over maximum range 0f 100 meters or 328 ft.

B. Maximum distance used or run will be 90 meters 295 ft from hub to hub with allowance for 5 ft patch cables on each end.

C. T568B Wiring shall be used for all connections.

D. Overall jacket coloring shall be BLUE RED WHITE AND GREEN

***Fiber Optic cables***

A. Fiber optic cables from connection housing to connection housing (homeruns) shall be Corning FREEDM Loose Tube, Gel-Free Multimode 62.5/125 (Corning part number nnnKUF-T4130DA1 where nnn is number of fibers)

with an interlocked armor with an overall flame retardant, sunlight resistant jacket. Fillers shall be flame resistant, non-hygroscopic and non-wicking. Overall jacket shall be BLACK.

B. Fiber optic cables from connection housing to device shall be Corning MIC Tight-Buffered Interlocking Armored, Riser, Fan-out, OFCP Multimode 62.5/125 (Corning part number nnnK61-31130-A1 where nnn is number of fibers) with an overall flame retardant, sunlight resistant jacket. Fillers shall be flame resistant, non-hygroscopic and non-wicking. Overall jacket shall be ORANGE.

C. See networking standards for details on networking cables

***CABLE FITTINGS***

A. Type MC cable shall be terminated with Killark MC Series “clencher” cable connectors.

***TERMINATIONS & SPLICES***

A. Connectors, lugs, and inline splices shall be tin plated copper, long barrel compression type. Lugs shall be NEMA two-hole types for cable sizes #8 AWG and larger. Hydraulic crimping tools with correct die sizes approved by the connector manufacturer shall be used.

B. Connections to buses shall be made with silicone bronze bolts, nuts, flat washers, and Belleville washers properly torqued.

C. Where terminations are made on insulated bus, the termination shall be insulated.

D. Splices and taps in lighting branch circuits shall be pre-insulated spring pressure connectors, Scotch-lock or equal.

E. The relevant UL listing shall be followed for all terminations

# WOODLAND PULP LLC

# TRAY ISTALLATION

# SPECIFICATIONS

# SECTION

# CABLE TRAY HANGING

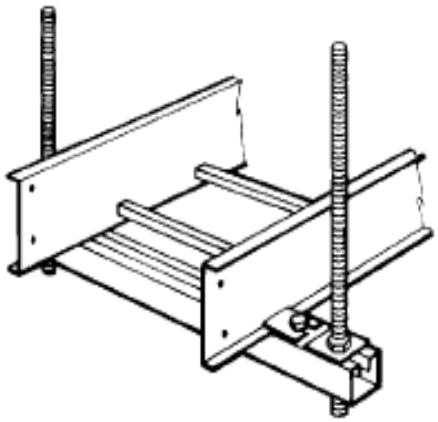

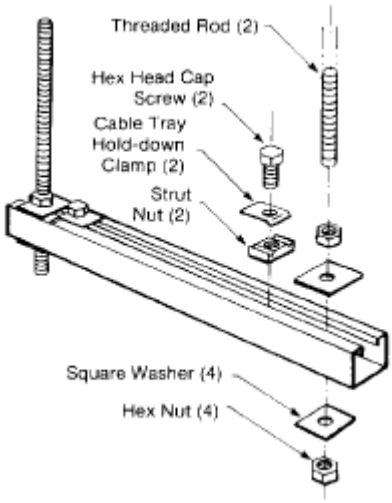


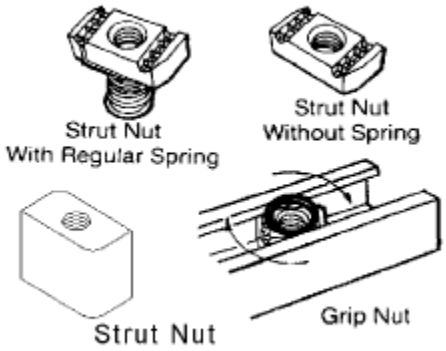


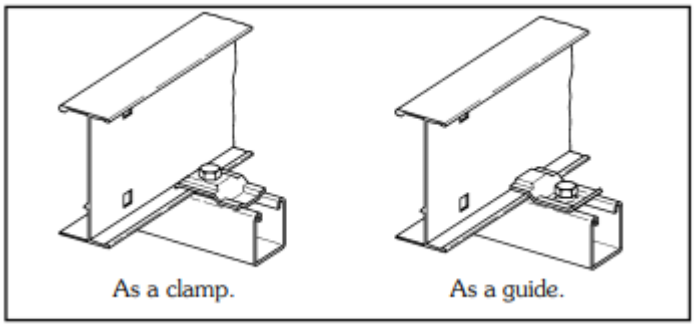


### *Trapeze Type Hangers*

To install:

a. Thread nuts onto threaded rod approximately 2 in. (50 mm) above desired location for bottom of cable tray.
b. Slide on square washers followed by stainless strut and second set of square washers.
c. Thread second set of nuts onto threaded rod.
d. Move cross member so the top surface is located where bottom of cable tray run will be located.
e. Move second set of nuts up threaded rod until cross member is reached and held in place.
f. Make sure cross member is level, then move first set of nuts down threaded rod until cross member is secured in place.
g. Hold-down guide clamps shall be used and may be mounted on either the inside or outside of the cable tray side rail.
h. When installed on the inside of the cable tray, the clamp and/or attaching hardware shall not extend above the rung.

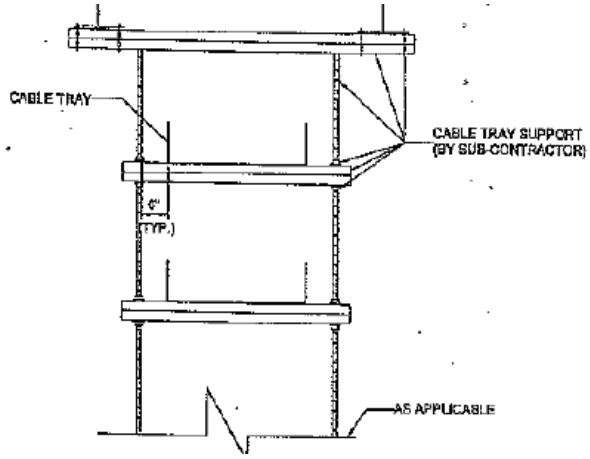


i. Trays may be stacked but 2 and ½ tray heights must be left before next trapeze hanger allowing a 1 ½ space factor for wire pulling

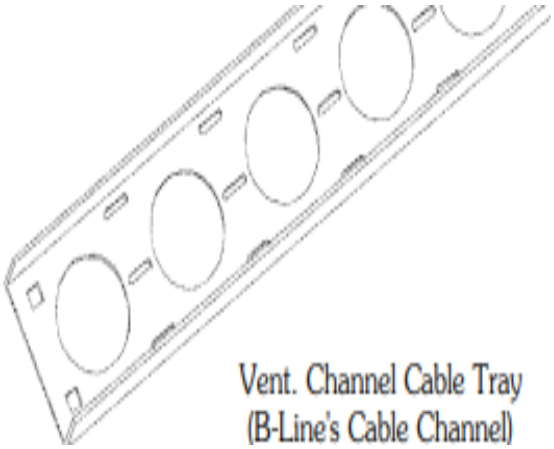


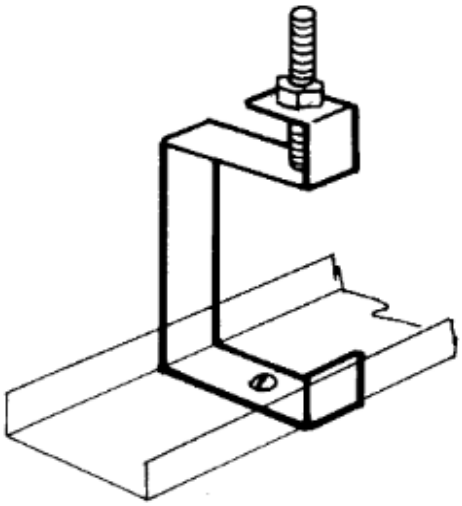

### *Single Channel Cable Tray Hanger*

To install:

a. Thread nut onto threaded rod to height required.
b. Place hanger on threaded rod and follow with one nut.
c. Run nut up threaded rod until bottom of hanger is at desired height.
d. Run top nut down to tighten.
e. Place channel on hanger and secure in place as necessary.

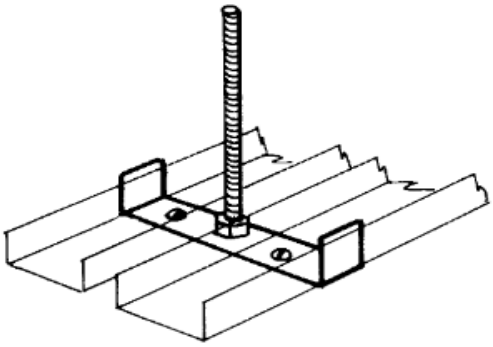

### *Double Channel Cable Tray Hanger*

To install:

a. Thread nut onto threaded rod to height required.

b. Place hanger on threaded rod and follow with one nut.
c. Run nut up threaded rod until bottom of hanger is at desired height.
d. Run top nut down to tighten.
e. Place channels on hanger and secure in place as necessary.

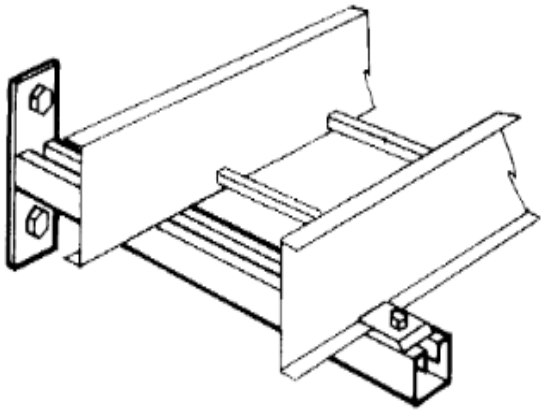

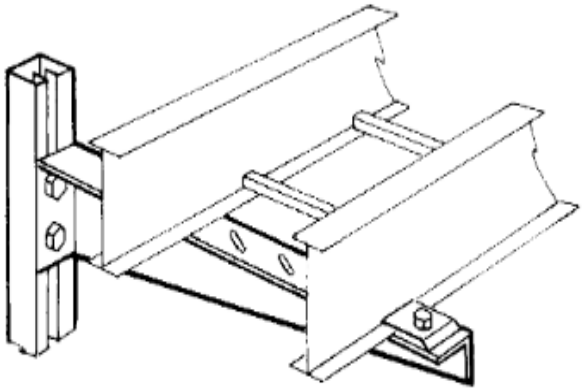

## *Wall and Cantilever Brackets*

a. Secure the brackets to the structure making sure they are level and aligned with each other.

## *Vertical Applications*

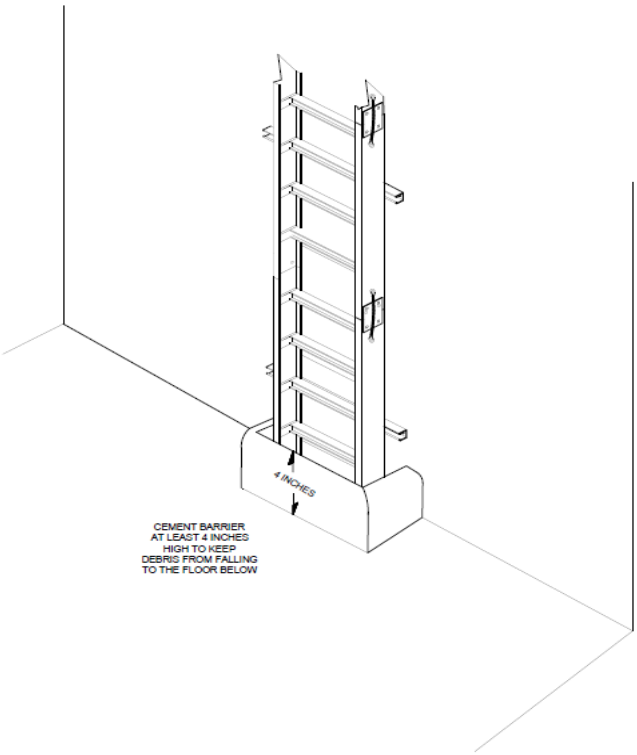


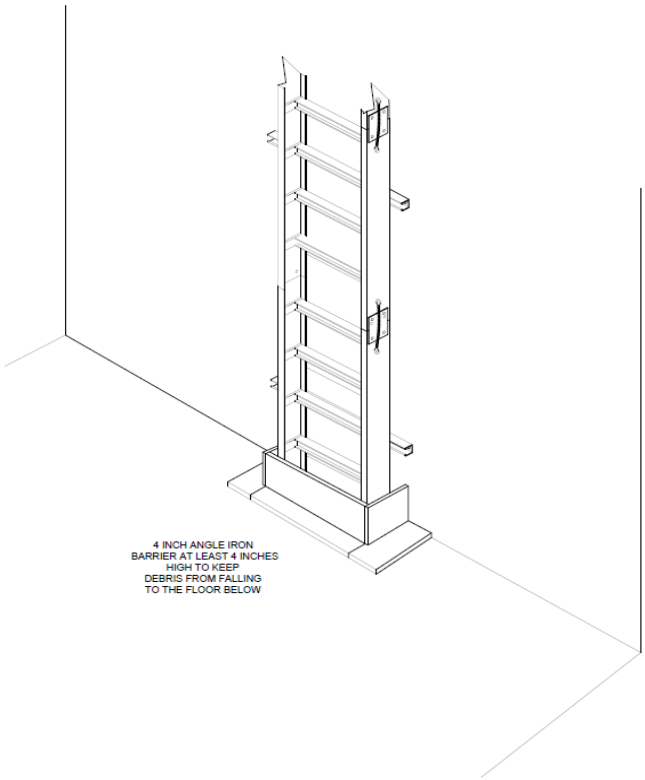

When vertical tray extends through a floor a 4” high cement berm or a 4” angle iron guard needs to be installed around the tray to prevent debris from falling to the below floor. When tray is not secured directly to the wall with strut the guard must cover the back as well.

## *STRAIGHT SECTION INSTALLATION*

Use the torque data below for fasteners. Follow manufacturer’s recommendations for nonmetallic or nonferrous fasteners. Torque values do not apply for hollow sections such as tubes. Consult the manufacturer for recommendations.

Table

**FASTENER TORQUE**

| Inch: GRD. 2 UNC | | Metric: Class 5.8 | |
|---|---|---|---|
| **Size** | **Ft-Lbs** | **Size** | **N-m** |
| 1/4 – 20 | 4-6 | M8 x 1.25 | 14-16 |
| 3/8 – 16 | 17-23 | M10 x 1.5 | 26-33 |
| 1/2 – 13 | 42-56 | M12 x 1.78 | 45-58 |

NOTES

1. Threads are not lubricated.
2. Fastener Finishes: zinc plated, cadmium plated, and stainless steel.

### *Straight Section Position*

After the supports are in place, the installation of the cable tray can begin at any place that is convenient. It is not necessary to start at one end of the run unless otherwise specified. It is ideal to lay out the system so that splice joints fall between the support and the quarter point (Figure 4.10A). This maximizes the rigidity of the cable tray. For example, when installing a 12- foot long section, a support spacing of 12 ft. (3.7 m) will cause the splice joints to fall at the same position every time.

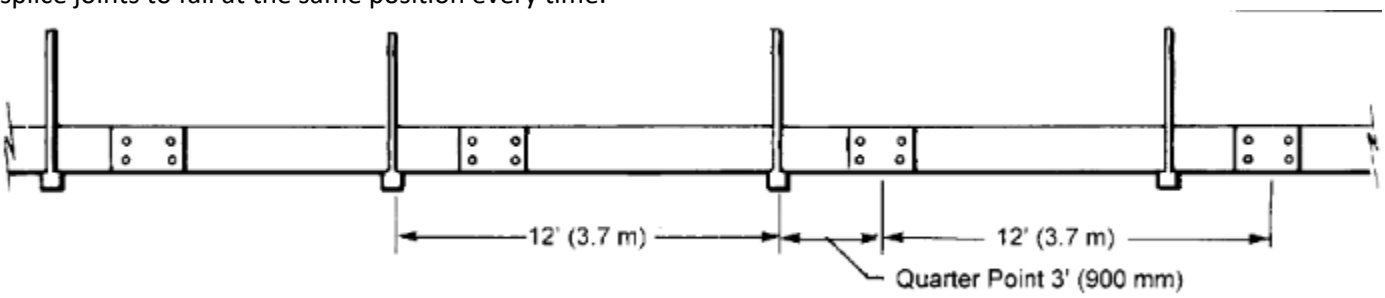


To begin, place a straight section across two supports so that the ends of the section are not directly on the support. If the support span is equal to the length of the straight sections, bolt two pieces together for this step. The support span should not be greater than the straight section length or as recommended by the manufacturer, to ensure no more than one splice is located between supports.

As a general practice, avoid placing splice plates over supports or at mid-span. However, certain cable tray systems and certain splice designs allow for random splice location. See manufacturer for details.

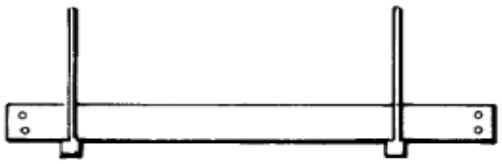

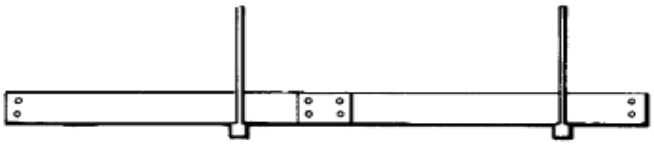

Place the next straight section across the next support and attach it to the previous section with a pair of splice plates and hardware. Splice plates should be placed on the outside of the cable tray, unless otherwise specified by the manufacturer, with the bolt heads on the inside of the cable tray.

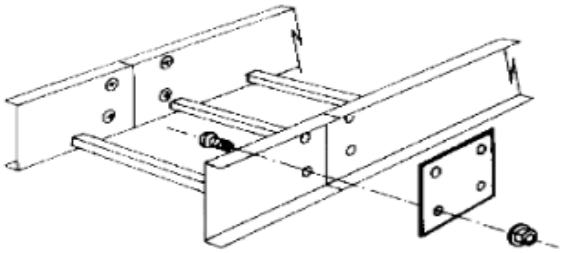

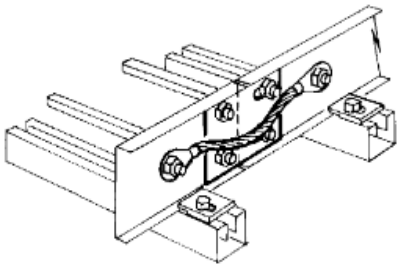

Expansion Splice Plates It is important that thermal contraction and expansion be considered when installing cable tray systems. The length of the straight cable tray run, and the temperature differential govern the number of expansion splice plates required.

**MAXIMUM SPACING BETWEEN EXPANSION JOINTS THAT PROVIDE FOR ONE INCH MOVEMENT****

| Temperature Differential | | Steel | | Aluminum | | Fiberglass | |
|---|---|---|---|---|---|---|---|
| °F | (°C) | feet | (m) | feet | (m) | feet | (m) |
| 25 | (14) | 512 | (156) | 260 | (79) | 667 | (203) |
| 50 | (28) | 256 | (78) | 130 | (40) | 333 | (102) |
| 75 | (42) | 171 | (52) | 87 | (27) | 222 | (68) |
| 100 | (56) | 128 | (39) | 65 | (20) | 167 | (51) |
| 125 | (70) | 102 | (31) | 52 | (16) | 133 | (41) |
| 150 | (83) | 85 | (26) | 43 | (13) | 111 | (34) |
| 175 | (97) | 73 | (22) | 37 | (11) | 95 | (29) |

* The temperature differential is the difference in the temperature between the hottest and coldest days of the year.
** For designs that provide for 5/8 in. (16 mm) movement (typically non-metallic), multiply maximum spacing between expansion joints by 0.625.

The cable tray should be anchored at the support nearest to its midpoint between the expansion splice plates and secured by expansion guides at all other support locations. The cable tray should be permitted longitudinal movement in both directions from that fixed point.

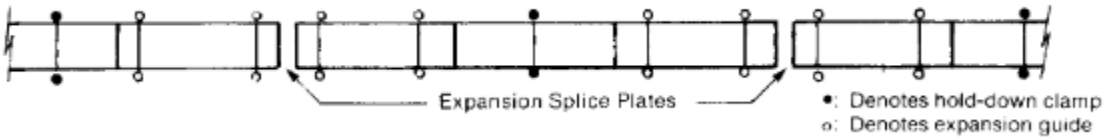


## *FITTINGS INSTALLATION*

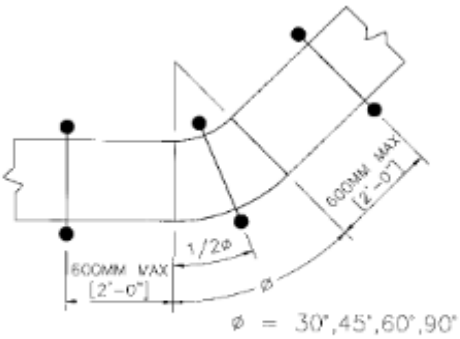


CENTER SUPPORT NOT REQUIRED
ON 12" RADIUS 30° & 45° FITTINGS

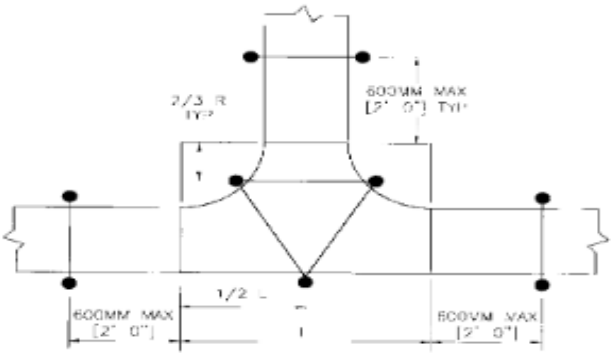


CENTER SUPPORT NOT REQUIRED ON 12" RADIUS FITTINGS

Recommended Support Locations for Fittings (unless otherwise recommended by the manufacturer)Horizontal Elbow Support Supports for horizontal cable tray fittings should be placed within 2 ft. (600 mm) of each fitting extremity, and as follows:

a. 90° supports at the 45° point of arc.
b. 60° supports at the 30° point of arc.
c. 45° supports at the 22-1/2° point of arc (except for the 12 in. [300 mm] radii).
d. 30° supports at the 15° point of arc (except for the 12 in. [300 mm] radii).

## *HORIZONTAL ELBOWS*

Horizontal Tee Support Place horizontal tee supports within 2 ft. (600 mm) of each of the three openings connected to other cable tray items for the 12 in. (300 mm) radius. On all other radii, at least one additional support should be placed under each side rail at the horizontal tee, preferably as shown.

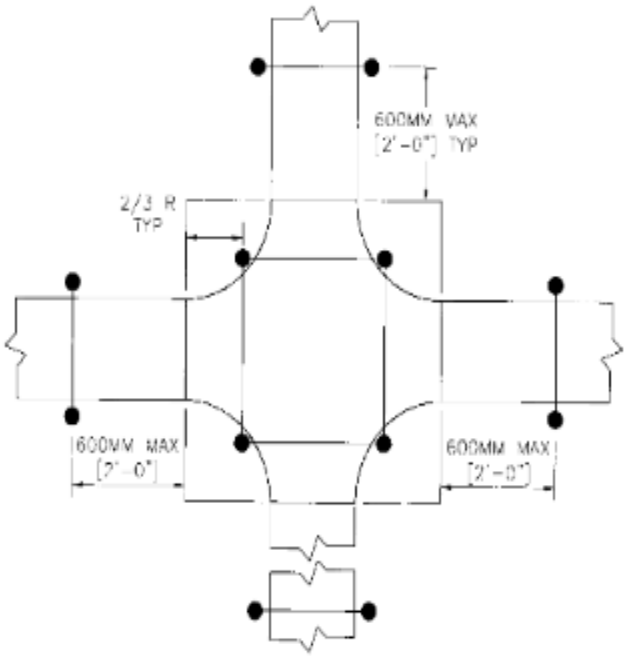


CENTER SUPPORT NOT REQUIRED ON 12" RADIUS FITTINGS

## *Horizontal Cross Support*

Place horizontal cross support within 2 ft. (600 mm) of each of the four openings connected to other cable tray items for the 12 in. (300 mm) radius. On all other radii, at least one additional support should be placed under each side rail of the horizontal cross, preferably as shown.

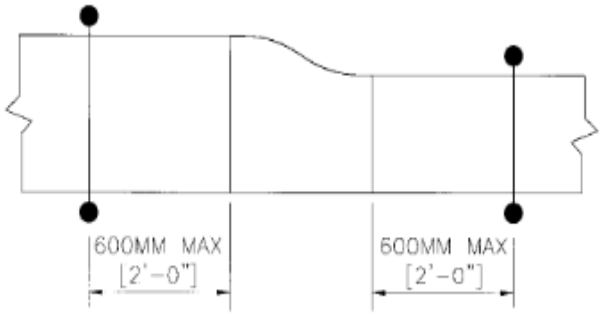


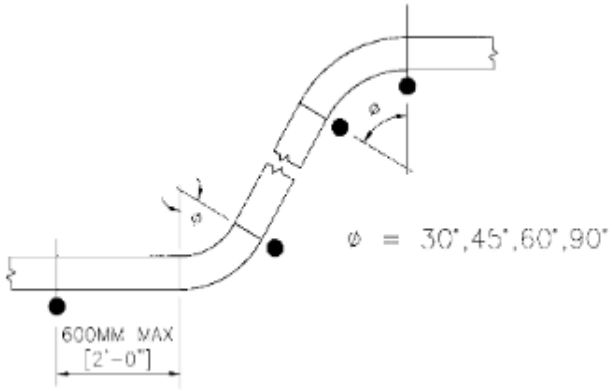


### *Reducer Support*

Place reducer supports within 2 ft. (600 mm) of each fitting extremity.

### *Vertical Cable Tray Elbows*

Vertical cable tray elbows at the top of runs should be supported at each end. At the bottom of runs, they should be supported at the top of the elbow and within 2 ft. (600 mm) of the lower extremity of the elbows.

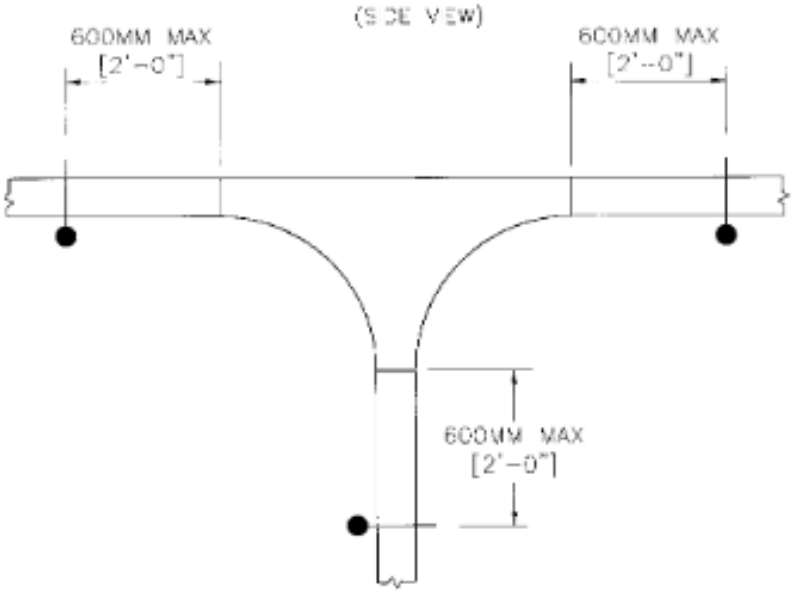


### *Vertical Cable Tray Tees*

Vertical cable tray tees should be supported within 2 ft. (600 mm) of each fitting extremity.

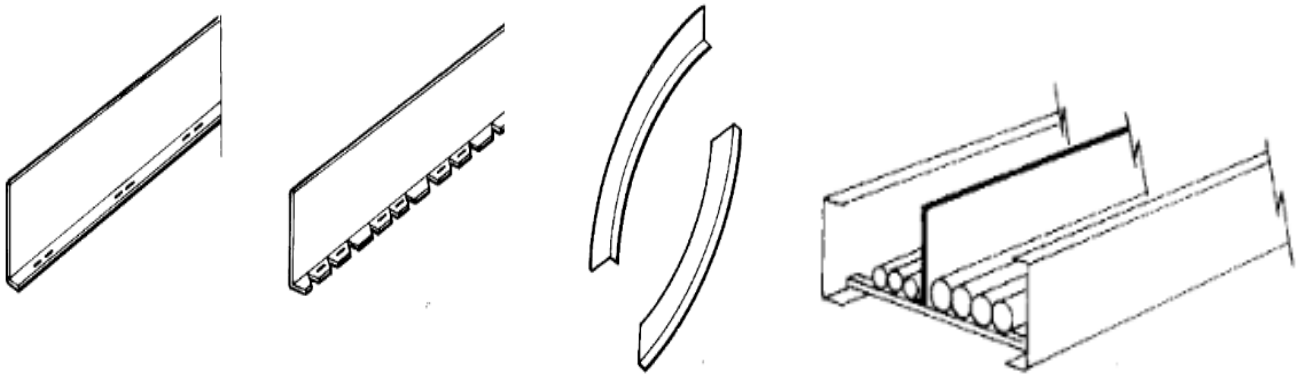

### *Barrier strips*

Barrier strips are sometimes used to separate cables within a cable tray as required by the National Electrical Code® (NEC®). Barrier strips are installed by placing them at the desired location, then fastening them down with the hardware provided, or bonded with adhesive (fiberglass only). This connection should be made at approximately every 3 ft. (900 mm).

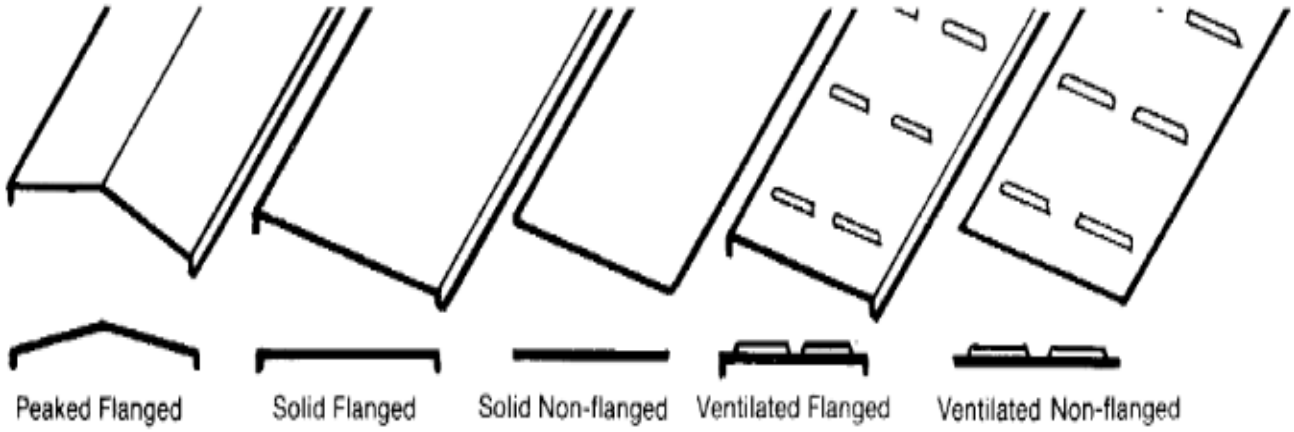


### *Covers*

**QUANTITY OF STANDARD COVER CLAMPS REQUIRED**

| | |
|---|---|
| Straight section, 6 ft. (1.8 m) | 4 pieces |
| Straight section, 10 ft. (3.0 m) and 12 ft. (3.7 m) | 6 pieces |
| Horizontal/vertical bends | 4 pieces |
| Tees | 6 pieces |
| Crosses | 8 pieces |

Covers are to be installed whenever the danger of flammable debris falling from above and collecting in the tray. Covers are also required if the wires may become damaged from falling materials. Ensure the correct type of covers are used for the application and all covers must be secured as per the manufacturers recommendations as well as the NEC.

## *GROUNDING AND BONDING*

Metal cable trays must be grounded and electrically continuous systems per NEC Article 318. For specific areas requiring bonding for electrical continuity

NOTE—Non-metallic cable trays do not serve as a conductor.
NOTE—It is recommended that wire mesh cable trays not be used as an equipment grounding conductor.

Cable Tray Used as an Equipment Ground Conductor (EGC) The use of aluminum and steel cable trays is permitted as an Equipment Grounding Conductor per NEC Article 318 when labeled and marked with the available cross sectional area. If the cable tray is to be used as an EGC, bonding jumpers must be installed on both side rails at the locations illustrated , unless the splice plates meet the electrical continuity requirements of NEMA VE 1.

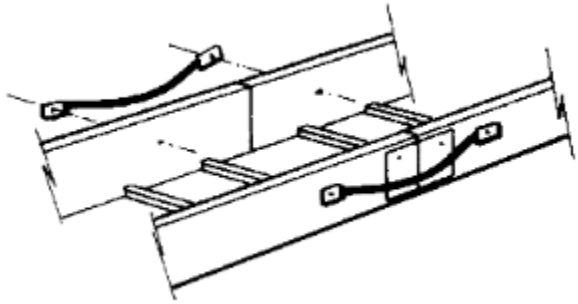

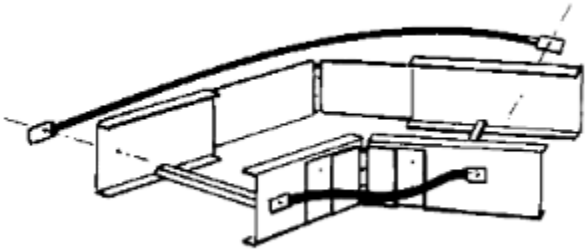

NOTE—Although permitted by the NEC, it is recommended due to the unique nature of the product, fittings are manufactured in the field from straight sections by cutting away the current carrying structural wires, reducing the current-carrying capability of the system.  As such, the use of wire mesh cable trays as an equipment grounding conductor is not recommended.

It is not necessary to install bonding jumpers at standard rigid aluminum or galvanized steel splice plate connections or offset reducing splice plate connections. For rigid splice plate connections of materials and finishes other than aluminum or galvanized steel, bonding jumpers may be required. For example, stainless steel splice plates require bonding jumpers.

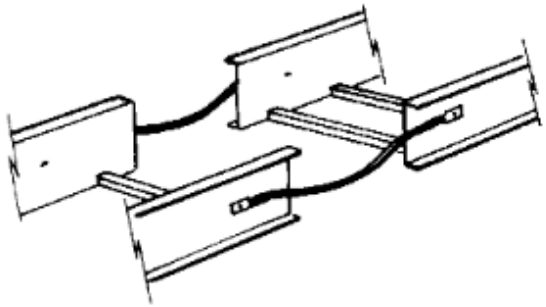

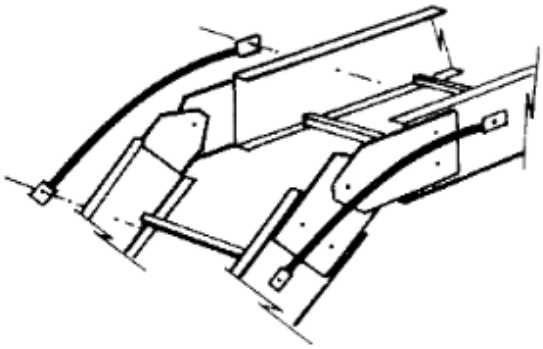

***Cable Trays with Separate Equipment Grounding Conductor Installed***

When a separate EGC cable is installed in or on cable tray, it may be bonded to the cable tray with a grounding clamp. Ground clamp styles include bolted lug types that require drilling the cable tray side rail and clamp-on styles that work like a beam clamp. One grounding clamp should be used on each straight section of cable tray.

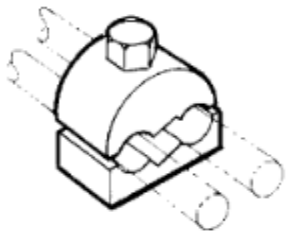

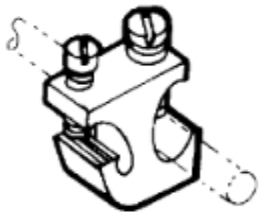

Check for Properly Sized EGC or Bonding Jumpers
Power Applications Bonding jumpers or separate EGC shall be sized according to NEC Articles 250 and 318. Note that NEC Table 318-7(b)(2) is the actual circuit breaker trip setting and not the maximum allowable. If the maximum ampere rating of the cable tray is not sufficient for the protective device to be used, the cable tray cannot be used as an EGC, and a separate EGC must be included in each cable or attached to the cable tray.

## *Non-Power Applications*

Cable tray systems containing conductors outside the scope of NEC Article 250 (such as communications, data, signal cables, etc.) still require proper bonding and grounding for system operation and performance.
Metal trays containing these conductors shall be electrically continuous, via listed connectors or the use of an insulated #10 (minimum) stranded bonding jumper. Electrical continuity across field fabricated wire mesh fittings can be accomplished using listed wire mesh tray connectors and following manufacturer's installation instructions.

Mixed Systems When power conductors are installed in metallic cable tray with non-power conductors, the bonding and grounding requirements shall be as in accordance with the NEC.
NOTE—Power and non-power cables should be separated with a fixed metal barrier.

**METAL AREA REQUIREMENTS FOR CABLE TRAYS USED AS EQUIPMENT GROUNDING CONDUCTORS (NEC TABLE 318-7(B)(2))**

| Maximum Fuse Ampere Rating, Circuit Breaker Ampere Trip Setting or Circuit Breaker Protective Relay Ampere Trip Setting for Ground-Fault Protection of any Cable Circuit In the Cable Tray System | Minimum Cross-Sectional Area of Metal* in square Inches | |
|---|---|---|
| | Steel Cable Trays | Aluminum Cable Trays |
| 60 | 0.20 | 0.20 |
| 100 | 0.40 | 0.20 |
| 200 | 0.70 | 0.20 |
| 400 | 1.00 | 0.40 |
| 600 | 1.50** | 0.40 |
| 1000 | -- | 0.60 |
| 1200 | -- | 1.00 |
| 1600 | -- | 1.50 |
| 2000 | -- | 2.00** |

For SI units: 1 square inch = 645 square millimeters.
* Total cross-sectional area of both side rails for ladder or trough cable trays or the minimum cross-sectional area of metal in channel cable trays or cable trays of one-piece construction.
** Steel cable trays shall not be used as equipment grounding conductors for circuits with ground-fault protection above 600 amperes. Aluminum cable trays shall not be used as equipment grounding conductors for circuits with ground-fault protection above 2000 amperes.

## *BONDING TO BUILDING STEEL AND EARTH*

Metallic cable trays shall be bonded to building steel and earth as supplemental grounding for ground fault protection and signal grounding ("noise" prevention). The tray shall be bonded to building steel and earth, at least every 60 ft. This is only required when the cable tray system is not inherently bonded (connected) to building steel and earth through metallic support systems.

**All metal conduit systems shall be bonded to metal cable tray systems with a UL listed NEC approved cable tray bonding corn clamp or a grounding bushing and the proper size grounding wire as per the NEC.**

## *FASTENING OF CABLES*

a. Cables may be fastened to the cable tray by means of cable clamps or cable ties. Generally, cables are fastened every 18 in. (450 mm) on vertical runs. Although not required by the NEC, single conductor cables can be fastened on horizontal runs to maintain spacing, prevent movement due to a fault current magnetic forces, and insure that the cable is confined within the cable fill area. When using cable clamps, the clamps should be sized correctly and only tightened enough to secure the cable without indenting the jacket. The same precaution should be observed with cable ties, and they should be applied with a pressure limiting device.

b. Extremely long vertical drops introduce a new set of problems requiring special considerations. The weight per foot of the cable multiplied by the number of feet in the vertical drop will, in many cases, exceed the load carrying capacity of the cable tray component, such as the one or two rungs supporting this weight, and could exceed the allowable cable tension. The cable weight should be supported in such a manner as to prevent damage to the cable tray or cable during this type of installation. As the cable is installed, intermediate supports should be installed on the vertical drop to break the cable load into segments supported at multiple places.

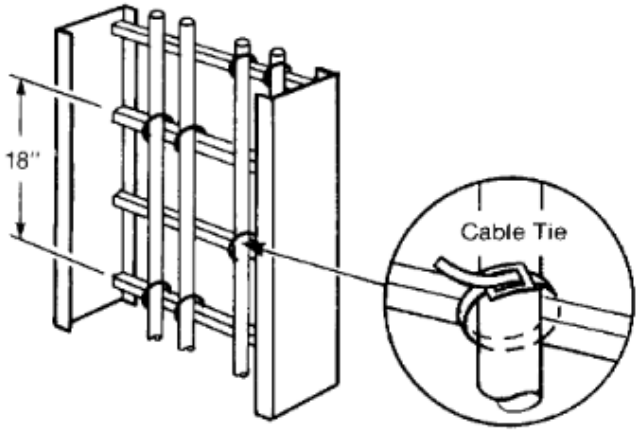


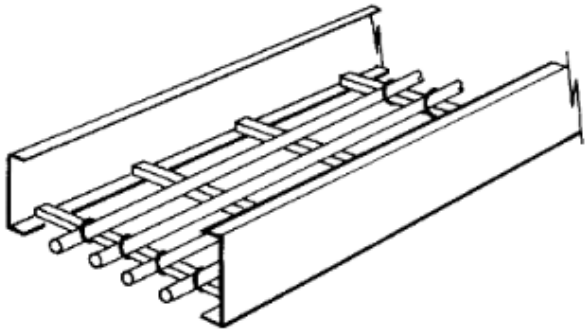

## *Penetration of fire-resistance-rated assemblies*

The raceway installer shall determine if the walls, floors, or ceilings are fire-rated prior to installing raceway systems. Penetration openings shall be properly filled for fire safety, using approved materials. The NEC and building codes require that openings around raceways which penetrate a fire-resistance rated assembly be sealed to prevent the spread of fire and smoke from one area migrating into another.

*NOTE: This can be accomplished by use of a listed penetration firestop system, or by use of annular space filler in accordance with building code exceptions. There are many listed penetration firestop systems which can be used with steel conduit/tubing to seal openings; the listing instructions shall be strictly followed.*

*NOTE: It is often incorrectly assumed that if raceway penetrates a fire-resistance-rated assembly, these products also must be "fire-resistance-rated." The codes require that the annular space around the raceway be properly filled so that the fire-resistance-rating of the assembly is maintained.*

Most building codes permit openings around cable trays that are penetrating concrete or masonry to be filled with cement, mortar, or grout. However, since local codes sometimes vary, the local requirements should be checked prior to installation. Also, project specifications often describe exactly how these openings are to be filled, even though the codes might permit other methods. Firestop systems listed for use with cable tray are permitted to fill the space surrounding the cable tray.

In all cases, the raceway installer shall use materials which assure that fire-resistance- ratings of the penetrated assembly are not degraded by the installation of a raceway system.

***NEMA Standards Publication VE 2- Cable Tray Installation Guidelines and The state adopted version of the NEC shall be referenced and followed at all times.***

# WOODLAND PULP LLC

# CONDUIT INSTALLATION

# SPECIFICATIONS

# SECTION

## *CONDUIT SELECTION*

Conduit shall be selected based upon area of installation and type of protection needed. The current adopted NEC shall be followed at a minimum if not addressed in this section.

EMT and IMC will not be used as a general rule unless preapproved by Woodland Pulp E/I management.

PVC will not be used unless for specific purposes pre engineered or approved by Woodland Pulp E/I management.

GRMC Galvanized Rigid Metal Conduit will be the preferred conduit here at the woodland mill for its protection characteristic's. From time to time in corrosive environments due to weather or chemicals it may be decided to go with another type of conduit listed below.

PVC coated conduit or "Rob Roy" will not be run unless approved for a special reason by Woodland Pulp E/I management.

ARC Aluminum Rigid Conduit may be used where impact is not a concern, or the environment may be better suited to its oxidation properties.

SSRC Stainless Steel Rigid Conduit may be used in extreme harsh environments unless in CLO2 areas as CLO2 is extremely corrosive to stainless steel.

### *Cutting and threading steel RMC, SSRC, and ARC*

Field threading is to be performed in accordance with the following procedures unless manufacturer's instructions differ. The operating and safety instructions should be read and understood prior to operating any threading equipment.

Use a standard 19 mm per 300 mm (3/4 inch per foot) taper (1 in 16) National Pipe Thread (NPT) die.

The threads shall be cut full and clean using sharp dies

Do not use worn dies. Although ragged and torn threads or threads which are not cut deep enough can be caused by poor threading practices; they can also indicate worn dies.

After cutting and prior to threading, ream the interior and remove sharp edges from the exterior.

### *Importance of thread length*

The length of the thread is important and the applicable UL requirements specify the manufactured length of the thread and the tolerance. A ring gauge is used to determine the correct thread length at the factory. Good practice is to thread the conduit one thread short. This is to prevent conduit from butting inside the coupling. This practice will permit a good electrical connection between the conduit and coupling.

To ensure that the threads are properly engaged, the coupling should be made up hand-tight, then wrench tightened. Generally, wrench-tightening should not exceed three additional threads. It should never be necessary to use an extension handle on a wrench to make up a tight joint. The only time an extension handle should be used is to dismantle a stubborn joint in an existing line.

### *Protection of field cut threads*

NEC Section 300.6 (A) requires that where corrosion protection is necessary and the conduit is threaded in the field, the thread shall be coated with an approved electrically-conductive, corrosion resistant compound. Coatings for this

purpose, listed under UL category “FOIZ” are available. Zinc-rich paint or other coatings acceptable to the AHJ may be used.

*NOTE: Corrosion protection is provided on factory-cut threads at time of manufacturing. Conduit, elbows, or nipples that are threaded anywhere other than at the factory where the product was listed are considered field cut.*

## *Bending steel RMC, SSRC, and ARC*

It is extremely important that the bender, its components, and accessories are matched to the conduit type and size being bent because of the forces being applied. When using a power bender, it is important that pins are in the proper pin holes for the conduit size.

Although the National Electric Code allows up to 360 degrees between pulling points, using as few bends as possible, and none exceeding 90 degrees, will make wire pulling easier. The fewer total degrees between pulling points and the use of shallow bends combine to reduce the strain created by pulling wire.

For multi-conductor control cable and communications cable, it is recommended that runs be limited to two 90-degree bends (a total of 180 degrees) per EIA/TIA-569 Commercial Building Standard for Telecommunications Pathways and Spaces

The minimum radius shall comply with NEC, Chapter 9, Table 2 and the measurement shall be made to the centerline of the bend. See EIA/TIA-569 Commercial Building Standard for Telecommunications Pathways and Splices for guidance on bend radius for conduit and tubing used with communication and optical fiber cables.

## *Expansion and deflection fittings*

Expansion fittings shall be installed where significant temperature differentials are anticipated. When conduit is installed as outdoor raceway spans between buildings, attached to bridges, on rooftops, etc., where expansion and contraction would result from the direct heat of the sun coupled with significant temperature drops, the full coefficient of expansion shall be applied in determining the need for expansion fittings. Table 3 shows length changes for steel conduit and tubing at selected temperature differentials.

**Table 3: Expansion Characteristics of Rigid Metal Conduit (RMC)**
Coefficient of Thermal Expansion = 0.65 x $10^{-5}$in/in/°F*

| Temperature Change in Degrees F | Length Change Steel Conduit in/100 feet | Temperature Change in Degrees F | Length Change Steel Conduit in/100 feet | Temperature Change in Degrees F | Length Change Steel Conduit in/100 feet | Temperature Change in Degrees F | Length Change Steel Conduit in/100 feet |
|---|---|---|---|---|---|---|---|
| 5 | 0.04 | 55 | 0.43 | 105 | 0.82 | 155 | 1.21 |
| 10 | 0.08 | 60 | 0.47 | 110 | 0.86 | 160 | 1.25 |
| 15 | 0.12 | 65 | 0.51 | 115 | 0.90 | 165 | 1.29 |
| 20 | 0.16 | 70 | 0.55 | 120 | 0.94 | 170 | 1.33 |
| 25 | 0.20 | 75 | 0.59 | 125 | 0.98 | 175 | 1.37 |
| 30 | 0.23 | 80 | 0.62 | 130 | 1.01 | 180 | 1.40 |
| 35 | 0.27 | 85 | 0.66 | 135 | 1.05 | 185 | 1.44 |
| 40 | 0.31 | 90 | 0.70 | 140 | 1.09 | 190 | 148 |
| 45 | 0.35 | 95 | 0.74 | 145 | 1.13 | 195 | 1.52 |
| 50 | 0.39 | 100 | 0.78 | 150 | 1.17 | 200 | 1.56 |

**Fine Print Note in Section 300.7(B) of the NEC refers the user to the Expansion Characteristics of PVC, Table 352.44(A) for Rigid, Nonmetallic Conduit, and suggests multiplying the lengths in that table by 0.20 to obtain a nominal number for steel conduit. Since the coefficient of steel conduit is between 2 and 3 times less than that of PVC conduit, you would need more expansion fittings for PVC conduit for a given temperature and length than for steel conduit. This table uses the coefficient of expansion for steel to calculate the exact length We have used the exact length of change.*

*NOTE: Where the conduit is not exposed to the direct heat of the sun, expansion fittings are not generally necessary because the coefficients of expansion for steel and common building materials are so similar. In conduit or tubing runs where expansion fittings are installed, provisions shall be made for the raceway to slide through the supports so that when expansion or contraction occurs it will allow the fitting to open and close properly. One way to accomplish this is to place a short sleeve over the raceway at each support large enough to allow the raceway to move freely with normal expansion. Support clamps should be sized per the sleeve size.*

Strong consideration should be given to the use of deflection fittings or other approved means when crossing a construction joint used in buildings, bridges, parking garages, or other structures. Structural construction joints will

experience shear and lateral loads due to gravity, expansion and contraction and movement of the structure. Where significant expansion is expected, expansion fittings can be installed in-line with a deflection fitting, or a combination expansion/deflection fitting can be used.

## *Attachment to boxes and support*

*NOTE: The variability of mounting surfaces, expected loads, and application environments will determine the appropriate support options and securement hardware. Project specifications normally calculate support requirements based on the minimum spacing intervals given in the NEC. Using closer support intervals than are required by the NEC is an acceptable option to heavier supports and mounting hardware in some applications.*

Properly align the raceway, fittings, and knockouts to provide secure mechanical and electrical connections. Allow sufficient conduit length to complete engagement of the conduit and fittings at joints and entries.

Conduit bushings shall not be used to secure threaded RMC or IMC to a box or enclosure. A locknut shall always be assembled between a conduit bushing and the inside of the box or enclosure.

Where a locknut is provided with a fitting as the means of securement to a box or enclosure, the locknut is to be secured by hand-tightening to the enclosure plus 1/4 turn using an appropriate tool.

*NOTE: While securing the locknut, take care to avoid excessive pressure when gripping the body of the fitting is necessary.*

Do not rely upon locknuts to penetrate nonconductive coatings on enclosures. Coatings shall be removed in the locknut contact area prior to raceway assembly to assure a continuous ground path is achieved. Touch up bare area as needed after installation.

## *Supporting*

Follow all Code requirements for spacing of supports and frequency of securing RMC, ARC and SSRC. The requirement to securely fasten raceways within the specified distance from each “termination point” includes, but is not limited to, outlet and junction boxes, device boxes, cabinets, and conduit bodies. Each raceway shall be so secured. Do not omit any supports.

*NOTE: Proper support and secure fastening protects the raceway joint during maintenance in the area of the raceway; this will help ensure a continuous ground path. Good workmanship in this area improves safety for the installer, other workers, and the public*.

## *Securing and fastening*

Raceways are permitted to be mounted directly to the building structure. Assure that supporting means and their associated fasteners are compatible with the mounting surface from which they are supported. Raceway supports shall be installed only on conduit of the trade size indicated on the fitting or its smallest unit shipping container.

The following supporting and fastening methods are recommended.

Steel conduit/tubing exposed on masonry surfaces, plaster, drywall, or wood framing members: One-hole straps, two-hole straps, conduit hangers, or similar products intended for the purpose, securely fastened with appropriate hardware. Conduit or tubing in trade sizes 1/2 through 1 are permitted to be supported by nail-straps in wood framing members.

Conduit mounted on metal framing members: One-hole straps, two-hole straps, conduit hangers or similar products intended for the purpose, fastened with metal screws or rivets. When using clamp-on supports add screws, rivets, beam clamps, or similar means for extra support, unless the clamp896 on supports are the hammer-on or press-on type.

Conduit run through openings in metal or wood studs: Such openings can be used for support where the openings are no more than 10 feet apart. Secure fastening at termination points is still required. Be sure to secure the conduit or tubing to the framing member where the raceway transitions to vertical and within three feet of the termination, as required by the NEC®.

Conduit suspended below ceilings or structural members such as beams, columns, or purlins, or in ceiling cavities: These raceways are best supported by lay-in pipe hangers. The pipe hangers are to be supported by threaded rod, which is, in turn, fastened in place by beam clamps or similar devices. Strut-type channel can also provide secure support. Raceways are not permitted to lie on the suspended ceiling. In fire-rated ceiling cavities, support by the ceiling wires is not permitted unless tested as part of the fire-rated assembly. A separate support system must be installed for the conduit. Where this system is wire, it shall be identified as the raceway support. Conduit support wires must be secured at both ends. In non-fire-rated ceiling cavities, the ceiling wires can be used for support where installed in accordance with the manufacturer's instructions.

Groups of conduit: Mount on strut-type channels, and secure in place with strut-type channel straps identified for the particular channel and raceways. Channel shall be fastened in place by means suitable to the mounting surface.

Support at new concrete pours: In these cases, place approved channel inserts into the concrete pour. Raceways will be mounted to the channels later in the construction process.

Structural steel members: Where raceways are mounted inside the web of I-beams, column-mount supports are permitted to support the conduit.

## *Penetration of fire-resistance-rated assemblies*

The raceway installer shall determine if the walls, floors, or ceilings are fire-rated prior to installing raceway systems. Penetration openings shall be properly filled for fire safety, using approved materials. The NEC and building codes require that openings around raceways which penetrate a fire-resistance rated assembly be sealed to prevent the spread of fire and smoke from one area migrating into another.

*NOTE: This can be accomplished by use of a listed penetration firestop system, or by use of annular space filler in accordance with building code exceptions. There are many listed penetration firestop systems which can be used with steel conduit/tubing to seal openings; the listing instructions shall be strictly followed.*

*NOTE: It is often incorrectly assumed that if conduit penetrates a fire-resistance-rated assembly, these products also must be "fire-resistance-rated." Steel conduit is noncombustible and does not require a "fire resistance rating". The codes require that the annular space around the steel conduit be properly filled so that the fire-resistance-rating of the assembly is maintained.*

Most building codes permit openings around steel RMC, ARC, and SSRC that are penetrating concrete or masonry to be filled with cement, mortar, or grout. However, since local codes sometimes vary, the local requirements should be checked prior to installation. Also, project specifications often describe exactly how these openings are to be filled, even though the codes might permit other methods. Firestop systems listed for use with steel conduit are permitted to fill the space surrounding the conduit.

In all cases, the raceway installer shall use materials which assure that fire-resistance- ratings of the penetrated assembly are not degraded by the installation of a raceway system.

## *Continuity of grounding path*

**<u>This will not be allowed at Woodland Pulp. IN NO CASE will a raceway system be considered the equipment grounding conductor.</u>**

The NEC states that the path to ground in circuits, equipment and metal enclosures for conductors shall be permanent and continuous. Complying with guidelines in the Fittings section 4.3 and Support section 4.4 is the major factor in maintaining electrical continuity. Using less than the NEC required supports or failing to properly tighten joints can cause discontinuity in a raceway system, which would result in the failure to carry a ground fault. Good installation workmanship is critical.

The NEC further requires that the path to ground have the capacity to safely conduct any fault current likely to be imposed and have sufficiently low impedance to limit the voltage to ground to cause operation of the circuit protective device. Steel RMC, ARC and SSRC are "conductors" permitted to carry current in the event of a ground fault. All three have been tested and they all meet the NEC requirements when properly designed and installed (see Annex B).

## *Bonding*

Bonding is used to provide electrical continuity so that overcurrent devices will operate, and shock hazards will not be present. This is the "finishing touch" for a metallic raceway system and close attention is to be paid to detail. All fittings, lugs, etc., shall be securely made up.

Bonding around steel raceway joints/couplings is not necessary when RMC, ARC, and SSRC are properly made up as recommended in this installation guideline. A secure joint provides excellent low impedance continuity. Bonding is not required because this joint already meets the NEC definition of bonding.

Metal raceways for feeder and branch circuits operating at less than 250 volts to ground shall be bonded to the box or cabinet. Do one or more of the following:
• Use listed fittings.
• For steel RMC, ARC, and SSRC use two locknuts one inside and one outside of boxes and cabinets.
• Use fittings, such as hub connectors, with shoulders that seat firmly against the box or cabinet, with one locknut on the inside of boxes and cabinets.

**<u>All metal conduit systems shall be bonded to metal cable tray systems with a UL listed NEC approved cable tray bonding "corn" clamp or a grounding bushing and the proper size grounding wire as per the NEC.</u>**

*NOTE: Remove paint in locknut areas to assure a continuous ground path. Repaint or cover any exposed area after installation is completed.*

Expansion fittings and telescoping sections of metal raceways shall be listed for grounding or shall be made electrically continuous by the use of equipment bonding jumpers or other suitable means in accordance with NEC 250.98.

## *Specific Installation Requirements*

1. The minimum size for steel conduit/tubing in industrial occupancies shall be trade size 3/4.

2. Sufficient expansion fittings for the application shall be installed

3. Where corrosion protection is required, field cut threads shall be protected with an approved electrically conductive, corrosion-resistant coating. For extended service life in wet or damp environments, it may be desirable to also apply this coating to exposed factory threads after installation.

4. Steel conduit/tubing shall not be used to support enclosures except as permitted by the NEC

5. Splices or taps shall not be made inside RMC, ARC, or SSRC.

6. All conductors and neutrals of the same circuit and all equipment grounding conductors shall be contained within the same conduit/tubing. ***NOTE: This is extremely important in alternating current (AC) applications.***

7. The conduit/tubing system shall be installed complete, including tightening of joints, from termination point to termination point prior to the installation of conductors.

## *LFMC Liquid Tight Metallic Conduit*

The NEC will be followed for LFMC uses here at Woodland Pulp

This conduit is similar to flexible metal conduit, but it has a jacket over the metal conduit. The jacket is liquid tight, nonmetallic, and sunlight-resistant.

Uses Permitted
This conduit can be installed exposed or concealed, directly buried in earth and if protection from liquids, vapor, or solids is necessary or if flexibility is desired. It can be installed in hazardous areas if approved for that installation. Refer to NEC Sections 501.4(B), 502.4, 503.3, 504.20, and 553.7(B).

Uses Not Permitted
It cannot be installed when subject to damage or where temperatures exceed that which is approved for the material.

Size
Minimum metric designator 16 (trade size ½). For exceptions, refer to Section 348.20(A). The maximum size allowed is metric designator 103 (trade size 4). Refer to 300.1(C) for metric designators and trade sizes.

Number of Conductors or Cables
(A) Metric Designators 16 through 103 (Trade Sizes ½ through 4). Refer to NEC Table 1, Chapter 9. Cables can be used if not prohibited by cable articles. Cables cannot exceed the fill requirements of Table 1, Chapter 9.
(B) Metric Designator 12 (Trade Size 3/8). Refer to the Fittings Outside Conduit columns in Table 348.22.

Bends How Made
Bends must not damage the conduit and must not reduce the internal diameter of the conduit. Bends can be made with auxiliary equipment manually. The radius of the curve to the centerline cannot be less than that shown in NEC Table 2, Chapter 9. Use the "Other Bends" column.

Bends Number in One Run
The maximum that is permitted is not more than 360° in bends between pull points.

Securing and Supporting
It must be supported and secured not more than 1.4 m (4½ ft.) apart. It must be securely fastened within 300 mm (12 in.) of a conduit termination. Four exceptions are for when the conduit is fished, where flexibility is needed, length not exceeding 900 mm (3 ft.) at terminals, lengths not exceeding 1.8 m (6 ft.) from a fixture terminal connection for tap conductors to a lighting fixture as noted in Section 410.64(C) and within accessible ceilings for lengths not exceeding 1.8 m (6 ft.) from the last point where the raceway is fastened, for connections to luminaires or other equipment. Horizontal runs allowed to be supported by the openings in framing members not more than 1.4 m (4½ ft.) apart and fastened within 300 mm (12 in.) of a termination.

Couplings and Connectors

Only UL listed and approved fittings and connectors shall be used.

Grounding and Bonding
Woodland Pulp does not allow this to be used as a grounding conductor.
As long as all fittings are approved for the installation it may be used as a bonding means per the NEC

## *LFNC Liquid Tight Flexible Nonmetallic Conduit*

The NEC will be followed for LFNC uses here at Woodland Pulp

**Uses Permitted**
LFNC shall be permitted to be used in exposed or concealed locations for the following purposes:
Where flexibility is required for installation, operation, or maintenance.
Where protection of the contained conductors is required from vapors, machine oils, liquids, or solids.
For outdoor locations where listed and marked as suitable for the purpose.
For direct burial where listed and marked for the purpose.
Type LFNC shall be NOT permitted to be installed in lengths longer than 1.8 m (6 ft) unless approved by Woodland Pulp E&I Management and secured in accordance with NEC 356.30.

Type LFNC-B as a listed manufactured prewired assembly, metric designator 16 through 27 (trade size 1/2 through 1) conduit.
For encasement in concrete where listed for direct burial and installed in compliance with NEC 356.42.
Conductors or cables rated at a temperature higher than the listed temperature rating of LFNC conduit shall be permitted to be installed in LFNC, provided the conductors or cables are not operated at a temperature higher than the listed temperature rating of the LFNC.

*Informational Note: Extreme cold can cause some types of nonmetallic conduits to become brittle and therefore more susceptible to damage from physical contact.*

**Uses Not Permitted**
LFNC shall not be used as follows:
Where subject to physical damage
Where any combination of ambient and conductor temperatures is in excess of that for which it is listed
In lengths longer than 1.8 m (6 ft), except as permitted by 356.10(5) or where a longer length is approved as essential for a required degree of flexibility
In any hazardous (classified) location, except as permitted by other articles in the NEC Code

**Size**
**(A) Minimum**
LFNC smaller than metric designator 16 (trade size 1/2) shall not be used unless permitted in NEC 356.20(A)(1) or (A)(2) for metric designator 12 (trade size 3/8).
For enclosing the leads of motors as permitted in NEC 430.245(B)
In lengths not exceeding 1.8 m (6 ft) as part of a listed assembly for tap connections to luminaires as required in NEC 410.117(C), or for utilization equipment

**(B) Maximum**
LFNC larger than metric designator 103 (trade size 4) shall not be used.
Informational Note: See NEC 300.1(C) for the metric designators and trade sizes. These are for identification purposes only and do not relate to actual dimensions.

**Number of Conductors**
The number of conductors shall not exceed that permitted by the percentage fill specified in Table 1, Chapter 9.

Cables shall be permitted to be installed where such use is not prohibited by the respective cable articles. The number of cables shall not exceed the allowable percentage fill specified in Table 1, Chapter 9.

**Bends — How Made**
Bends in conduit shall be so made that the conduit is not damaged and the internal diameter of the conduit is not effectively reduced. Bends shall be permitted to be made manually without auxiliary equipment. The radius of the curve to the centerline of any bend shall not be less than shown in NEC Table 2, Chapter 9 using the column "Other Bends."

**Bends — Number in One Run**
There shall not be more than the equivalent of four quarter (90 degree) bends (360 degrees total) between pull points, for example, conduit bodies and boxes.

**Trimming**
All cut ends of conduit shall be trimmed inside and outside to remove rough edges.

**Securing and Supporting**
Type LFNC shall be securely fastened and supported in accordance with one of the following:
Where installed in lengths exceeding 1.8 m (6 ft), the conduit shall be securely fastened at intervals not exceeding 900 mm (3 ft) and within 300 mm (12 in.) on each side of every outlet box, junction box, cabinet, or fitting. Where used, cable ties shall be listed for the application and for securing and supporting.
Securing or supporting of the conduit shall not be required where it is fished, installed in lengths not exceeding 900 mm (3 ft) at terminals where flexibility is required, or installed in lengths not exceeding 1.8 m (6 ft) from a luminaire terminal connection for tap conductors to luminaires permitted in NEC 410.117(C).
Horizontal runs of LFNC supported by openings through framing members at intervals not exceeding 900 mm (3 ft) and securely fastened within 300 mm (12 in.) of termination points shall be permitted.
Securing or supporting of LFNC shall not be required where installed in lengths not exceeding 1.8 m (6 ft) from the last point where the raceway is securely fastened for connections within an accessible ceiling to a luminaire(s) or other equipment. For the purpose of NEC 356.30, listed liquid tight flexible nonmetallic conduit fittings shall be permitted as a means of support.

**Couplings and Connectors**
Only fittings listed for use with LFNC shall be used. Angle connectors shall not be used for concealed raceway installations. Straight LFNC fittings are permitted for direct burial or encasement in concrete.

**Splices and Taps**
Splices and taps shall be made in accordance with NEC 300.15.

**Grounding**
Where equipment grounding is required, a separate equipment grounding conductor shall be installed in the conduit.
Exception No. 1: As permitted in NEC 250.134, Exception No. 2, for dc circuits and NEC 250.134, Exception No. 1, for separately run equipment grounding conductors.
Exception No. 2: Where the grounded conductor is used to ground equipment as permitted in NEC 250.142.

# WOODLAND PULP LLC

# CONTROL INSTALLATION

# SPECIFICATIONS

# SECTION

**Field Terminations**

Guidelines for field termination

- All transmitters shall be powered from the I/O card whenever possible
- Shield wiring shall not be terminated in the field to prevent ground loops
- See cable and wiring standards for more details
- See junction box and enclosures standards for more details on field terminations

**Expansion of Existing Systems**

When reusing mill controllers for a new project, these guidelines shall be followed:

- All discrete I/O can utilize existing 120VAC/125VDC and or be upgraded to 24VDC
    - Turbine Controls may use 125-volt DC if applicable and sourced from the system
- All analog I/O shall be 4-20mA, and HART if applicable, unless otherwise specified
    - For transmitters and valves, see instrumentation standards
- All analog signals shall be wired to an HPM designated by the Woodland Pulp E&I Management except in areas with a DeltaV system
- All discrete signals shall be wired to a PLC (Logic Manager or ControlLogix PLC) designated by the Woodland Pulp E&I Management
- All new DCS hardware shall be conformally coated whenever possible

**PLC Systems**

All new PLC systems (including new I/O hardware as extensions of existing systems) installed in the mill shall be ControlLogix PLC's with the following guidelines:

- The processor shall be an L73K processor with an SD card installed to accommodate restoring the program after a power interruption without downloading or a battery
    - Or higher equivalent
- The program shall be v33 or higher
- At a minimum, power supplies for the processor rack must be redundant with separate feeds
- Ethernet networking used for remote I/O shall use DLR in a ring to protect against single failures
- All discrete I/O shall be 24-volt DC unless otherwise specified by Woodland Pulp E&I management
- All analog I/O shall use 4-20mA signals, and HART if applicable, unless otherwise specified
- All cards must be conformally coated whenever possible
- Location of all I/O racks shall be above the wiring terminations within a cabinet
- All local HMI systems for PLC's shall be the most modern PanelView fed with AC power
    - Version must be v10
    - All new installations shall consider a computer-based HMI alternative due to hardware costs
- Wherever possible these systems shall be housed in an environmentally controlled, separate building to minimize air quality impacts and liquid intrusions
- All programming conversions from older PLC's will use tag-based programming using controller tags
    - i.e. not N7" or "B15" tagnames and not produced/consumed tags or routine based tags
- Any use of AOI's shall include thorough detailed comments to clearly explain it's purpose and function in that application

**Motor PLC Labels**

- All PLC labels used for motors will be the standard tag name used for a motor
- UUM###
- Where UU = Unit where the motor is located
- And ### = is the motor number
- For example, the motor for the main clarifier rake will be 87M201
- The full tag name used for the PLC label will be the motor tag starting with an underscore since CLX tags can't start with a number (_87M201) plus an additional extension. The table details the extensions used for each function. "xx" is used to denote a variable which can be determined on a case by case basis

| Label Extension | Function | Example using _87M201 |
|---|---|---|
| **DCS_START_CMD** | DCS Start | _87M201_DCS_START_CMD |
| **DCS_STOP_CMD** | DCS Stop | _87M201_DCS_STOP_CMD |
| **LOC_START_CMD** | Local Start | _87M201_LOC_START_CMD |
| **LOC_STOP_CMD** | Local Stop | _87M201_LOC_STOP_CMD |
| **LOC_JOG_CMD** | Local Jog | _87M201_LOC_JOG_CMD |
| **MTR_SW_REM** | Local Switch in Remote | _87M201_ MTR_SW_REM |
| **MTR_SW_LOC** | Local Switch in Local | _87M201_ MTR_SW_LOC |
| **MTR_SW_OFF** | Local Switch in Off | _87M201_ MTR_SW_OFF |
| **MTR_SW_ON** | Local Switch in On | _87M201_MTR_SW_ON |
| **MTR_SW_AUTO** | Local Switch in Auto | _87M201_MTR_SW_AUTO |
| **MTR_START_CMD** | Start Output | _87M201_MTR_START_CMD |
| **MTR_STOP_CMD** | Stop Output | _87M201_MTR_STOP_CMD |
| **MTR_RDY** | Ready | _87M201_MTR_RDY |
| **MTR_RUN** | Running Feedback | _87M201_MTR_RUN |
| **MTR_ESTOP** | E-Stop | _87M201_MTR_ESTOP |
| **MTR_VIB** | Motor Vibration | _87M201_MTR_VIB |
| **DRV_FAULT** | Drive Fault | _87M201_DRV_FAULT |
| **START_CMD_TMR** | Start Timer | _87M201_START_CMD_TMR |
| **STOP_CMD_TMR** | Stop timer | _87M201_STOP_CMD_TMR |
| **MTR_FOxx_xxx** | First Out | _87M201_xxx_FOxx_xxx |
| **MTR_ILK_xxxx** | Interlocks | _87M201_MTR_ILKxx |

**DCS Systems**

All new DCS systems installed in the mill shall be an extension of the DeltaV system currently installed at the Pulp Dryer.

- CHARM I/O shall be used for field cabinets when it is practical to do so
- All discrete I/O shall be 24-volt DC unless otherwise specified by Woodland Pulp E&I management
- All analog I/O shall be 4-20mA, and HART if applicable, unless otherwise specified
- All controllers and system computers (i.e. workstations/servers/etc.) must be fed from a UPS
- Wherever possible these systems shall be housed in an environmentally controlled, separate building to minimize air quality impacts and liquid intrusions
- All DCS systems shall have redundancy in the power feeds and a UPS capable of powering all essential systems to prevent shutdown of the area if power is lost
- All programming for DCS Systems shall follow Woodland Pulp's Programming Standards

**Hardwired Systems**

All new hardwired systems installed in the mill shall use the following guidelines:

- 30mm pushbuttons/selector switches
- Allen Bradley relays or equivalent
- All power to hardwired systems shall be 120 Volt AC whenever possible
- All enclosures must be NEMA 4X enclosures with Stainless Steel
    - Must be Hoffman hinged or equivalent with only a handle (no lock)

**Networking**

See Networking standards for information regarding IP addresses, network cabling requirements, etc.

**Exceptions**

Any project which requires different standards than those contained within this document must be approved by the Woodland Pulp E/I Management and the Project Manager for Woodland Pulp, LLC.

# WOODLAND PULP LLC

# INSTRUMENTATION LOOP NUMBERING

# INSTALLATION SPECIFICATIONS

# SECTION

# INSTRUMENTATION LOOP ISA NUMBERING STANDARDS

Instrument loop numbers are assigned using the following codes and scheme:

1. **Area-Identifier-Loop number**

**Area** Maximum of three numbers
**Identifiers** ISA standards letters listed below
**Loop Number** Number label and letter (letters used when two similar instruments are in the same loops)
**Drawing Numbers** Loop Sheets shall be named after the controller when one exists (see LC in example). "LI" for a level indicator with no "auto" control element and "HCV" or HCZ" for a manual (hand controlled) station.

**Example:** 79-LC-202 Hypo Seal Tank Level Controller
79-LT- 202 Hypo Seal Tank Level Transmitter
79-LCV-202A Hypo Seal Tank Level Control Valve Hot Water Make-up
79-LCV-202B Hypo Seal Tank Level Control Valve to #2 Shower
79-LCV-202C Hypo Seal Tank Level Control Valve to Man Lift
79-LY-202A Hypo Seal Tank Level Hot Water Make-up & to #2 Shower Transducer
79-LY-202C Hypo Seal Tank Level to Main Lift Transducer

79 = Area
202 = Specific loop number

**<u>Analysis/Analytical</u>** (Ex. ORP, DO, PH etc.)

AT = Analysis/Analytical Transmitter
AE = Analysis/Analytical Element
ASL = Analysis/Analytical Switch Low
ASLL = Analysis/Analytical Switch Low Low
ASH = Analysis/Analytical Switch High
ASHH = Analysis/Analytical Switch High High
AA = Analysis/Analytical Alarm (Low/High Alarm)
AAL = Analysis/Analytical Alarm Low (For Beacons, Horn)
AAH = Analysis/Analytical Alarm High (For Beacons, Horn)
AV = Analysis/Analytical Control Valve
AY = Analysis/Analytical Transducer
ACZ = Analysis/Analytical Control Device (AC Drive, DC Drive, Damper Drive)

**<u>Burner, Combustion</u>**

BE = Burner, Combustion Sensor
BT = Burner, Combustion Transmitter

**Conductivity**

CT = Conductivity Transmitter
CE = Conductivity Element
CSL = Conductivity Switch Low
CSLL = Conductivity Switch Low Low
CSH = Conductivity Switch High
CSHH = Conductivity Switch High High
CA = Conductivity Alarm (Low/High Alarm)
CAL = Conductivity Alarm Low
CAH = Conductivity Alarm High
CCV = Conductivity Control Valve
CY = Conductivity Transducer
CCZ = Conductivity Control Device (AC Drive, DC Drive, Damper Drive)

**Density**

DT = Density Transmitter
DE = Density Element
DSL = Density Switch Low
DSLL = Density Switch Low Low
DSH = Density Switch High
DSHH = Density Switch High High
DA = Density Alarm (Low/High Alarm)
DAL = Density Alarm Low
DAH = Density Alarm High
DCV = Density Control Valve
DY = Density Control Transducer
DX = Density Radio Active Source
DCZ = Density Control Device (AC Drive, DC Drive, Damper Drive)

**Differential Pressure**

PDT = Differential Pressure Transmitter
PDE = Differential Pressure Element
PDL = Differential Pressure Switch Low
PDLL = Differential Pressure Switch Low Low
PDH = Differential Pressure Switch High
PDHH = Differential Pressure Switch High High
PDA = Differential Pressure Alarm (Low/High Alarm)
PDAL = Differential Pressure Alarm Low
PDAH = Differential Pressure Alarm High
PDCV = Differential Pressure Control Valve
PDY = Differential Pressure Transducer
PDCZ = Differential Pressure Control Device (AC Drive, DC Drive, Damper Drive)

**Flow**

FT = Flow Transmitter
FE = Flow Element
FSL = Flow Switch Low
FSLL = Flow Switch Low Low
FSH = Flow Switch High
FSHH = Flow Switch High High
FA = Flow Alarm (Low/High Alarm)
FAL = Flow Alarm Low
FAH = Flow Alarm High
FCV = Flow Control Valve
FY = Flow Control Transducer
FCZ = Flow Control Device (AC Drive, DC Drive, Damper Drive

**Dimension**

GT =Dimension Transmitter
GE = Dimension Element
GSL = Dimension Switch Low
GSLL = Dimension Switch Low Low
GSH = Dimension Switch High
GSHH = Dimension Switch High High
GA = Dimension Alarm (Low/ High Alarm)
GAL = Dimension Alarm Low
GAH = Dimension Alarm High
GCV = Dimension Control Valve
GY = Dimension Transducer
GCZ = Dimension Control Device (AC Drive, DC Drive, Damper Drive)

**Hand Control**
HCV = Hand Control Valve
HCZ = Hand Control Drive

**Current** (Use Motor Number Instead of Loop Numbers)

IT = Current Transmitter
IE = Current Element
ISL = Current Switch Low
ISLL = Current Switch Low Low
ISH = Current Switch High
ISHH = Current Switch High High
IA = Current Alarm (Low/ High Alarm)
IAL = Current Alarm Low
IAH = Current Alarm High
ICV = Current Control Valve
IY = Current Control Transducer
ICZ = Current Control Device (AC Drive, DC Drive, Damper Drive)

**Consistency**

NT = Consistency Transmitter
NE = Consistency Element
NA = Consistency Alarm (Low/ High Alarm)
NAL = Consistency Alarm Low
NAH = Consistency Alarm High
NCV = Consistency Control Valve
NY = Consistency Control Transducer
NCZ = Consistency Control Device (AC Drive, DC Drive, Damper Drive)

**Level**

LT = Level Transmitter
LE = Level Element
LSL = Level Switch Low
LSLL = Level Switch Low Low
LSH = Level Switch High
LSHH = Level Switch High High
LA = Level Alarm (Low/ High Alarm)
LAL = Level Alarm Low
LAH = Level Alarm High
LCV = Level Control Valve
LY = Level Control Transducer
LCZ = Level Control Device (AC Drive, DC Drive, Damper Drive)

**Metal, Magnetic Detection**

MT = Metal, Magnetic Detection Transmitter
ME = Metal, Magnetic Detection Element
MA = Metal, Magnetic Detection Alarm (Low/High Alarm)
MAL = Metal, Magnetic Detection Alarm Low
MAH = Metal, Magnetic Detection Alarm High

**Pressure**

PT = Pressure Transmitter
PE = Pressure Element
PSL = Pressure Switch Low
PSLL = Pressure Switch Low Low
PSH = Pressure Switch High
PSHH = Pressure Switch High High
PA = Pressure Alarm (Low/High Alarm)
PAL = Pressure Alarm Low
PAH = Pressure Alarm High
PCV = Pressure Control Valve
PY = Pressure Control Transducer

PCZ = Pressure Control Device (AC Drive, DC Drive, Damper Drive)

**Speed**

ST = Speed Transmitter
SE = Speed Element
SSL = Speed Switch Low
SSLL = Speed Switch Low Low
SSH = Speed Switch High
SSHH = Speed Switch High High
SA = Speed Alarm (Low/High Alarm)
SAL = Speed Alarm Low
SAH = Speed Alarm High
SY = Speed Transducer
SCZ = Speed Control Device (AC Drive, DC Drive, Damper Drive

**Discrete Valve**

SV = Solenoid Valve
SOV = Solenoid Operated Shutoff Valve
SCV = Solenoid Control Valve
MOV = Motor Operated Valve

**Temperature**

TT = Temperature Transmitter
TE = Temperature Element
TSL = Temperature Switch Low
TSLL = Temperature Switch Low Low
TSH = Temperature Switch High
TSHH = Temperature Switch High High
TA = Temperature Alarm (Low/High Alarm)
TAL = Temperature Alarm Low
TAH = Temperature Alarm High
TCV = Temperature Control Valve
TY = Temperature Transducer
TCZ = Temperature Control Device (AC Drive, DC Drive, Damper Drive)

**Multivariable**

UT = Multivariable Transmitter
UE = Multivariable Element

**Vibration**

VT = Vibration Transmitter
VE = Vibration Element
VSL = Vibration Switch Low
VSLL = Vibration Switch Low Low
VSH = Vibration Switch High
VSHH = Vibration Switch High High
VA = Vibration Alarm (Low/High Alarm)
VAL = Vibration Alarm Low
VAH = Vibration Alarm High

**Weight**

WT = Weight/Load Transmitter
WE = Weight/Load Element
WSL = Weight/Load Switch Low
WSLL = Weight/Load Switch Low Low
WSH = Weight/Load Switch High
WSHH = Weight/Load Switch High High
WA = Weight/Load Alarm (Low/High Alarm)
WAL = Weight/Load Alarm Low
WAH = Weight/Load Alarm High
WCV = Weight/Load Control Valve
WY = Weight/Load Control Transducer
WCZ = Weight/Load Device (AC Drive, DC Drive, Damper Drive)

**Hazard Environment Detectors**

XT = Hazardous Environment Detector Transmitter
XE = Hazardous Environment Detector Element
XSL = Hazardous Environment Detector Switch Low
XSLL = Hazardous Environment Detector Switch Low Low
XSH = Hazardous Environment Detector Switch High
XSHH = Hazardous Environment Detector Switch High High
XA = Hazardous Environment Detector Alarm (Low/High Alarm)
XAL = Hazardous Environment Detector Alarm Low
XAH = Hazardous Environment Detector Alarm High

**Position**

ZT = Position Transmitter
ZE = Position Element
ZS = Position Switch
ZSL = Position Switch Low
ZSLL = Position Switch Low Low
ZSH = Position Switch High
ZSHH = Position Switch High High
ZSO = Position Switch Open
ZSC = Position Switch Close
ZSI = Position Switch Inserted
ZSR = Position Switch Retracted
ZA = Position Alarm
ZAL = Position Alarm Low
ZAH = Position Alarm High
ZCV = Position Control Valve
ZY = Position Control Transducer
ZCZ = Position Device (AC Drive, DC Drive, Damper Drive)

**DCS**

The DCS naming, whenever possible, will match the above listed naming conventions with the following exceptions.

O = Output to field device
I = Input
X = Calc/Modification
C = Controller

**Example:**

79LI202 Level Controller Input
79LC202 Level Controller
79LO202 Level Controller output

# WOODLAND PULP LLC

# JUNCTION BOX INSTALLATION

# SPECIFICATIONS

# SECTION

**Junction Box**

- Hinged w/ latches
- Bolt-in Backplate with insets
- External Mounting flanges required
- Connections shall only be made on the bottom of the box
- Hubs shall be used in connecting conduits to junction boxes
- Shall be Labeled in accordance with accepted junction box labeling standard
- Shall be hung between 36” and 72” from floor to be accessible
- Shall be mounted with acceptable hardware based on environment it is to be in
- Shall be of adequate size to allow for 25% expansion based on use of junction box
- Size should consider stocked materials currently available in the materials supply currently in the company
- Material of box shall be appropriate to the environment in which it is installed
- Shall be mounted on Unistrut that is mounted vertically to not collect liquids or other materials.
- Nothing shall be installed so as to impede access to the junction box as per the NEC (e.g. pipes blocking the door, etc.)
- Shall have a low point drain installed
- Shall have gasketed doors

# WOODLAND PULP LLC

# MCC INSTALLATION

# SPECIFICATIONS

# SECTION

# *LVMCC and MVMCC INSTALLATION STANDARDS*

LVMCC and MVMCC Line ups shall be properly separated, shall be in rooms with 2 means of egress, and shall be locked at all times with a standardized key for all qualified people unless approved to be open by Woodland Pulp E/I management.

Rooms for electrical gear shall be enclosed roofed and temperature controlled and shall be designated an Equipment Room and be given a number by Woodland Pulp E/I management. This number will be posted on all doors into room with a 4-inch yellow label and bold black lettering. *Example:*

**ER - 80**

## ***NEW LVMCC INSTALLATIONS***

1) All new LVMCC installations shall be of a "retractable with door closed" version of MCC line up. This will lessen likelihood of Arc Flash incidents providing a safer process.

2) For all new installations consideration shall be given to constructing exterior to the process in a building adjacent. This can be a conventionally built MCC Room with a raised floor, or a modular e house type. When the electrical distribution equipment is outside the process building it does not get effected by process environments such as corrosive air quality, process leaks and releases of liquids, gasses, or solids. The temperature controlling equipment is removed from these atmospheres as well increasing life span and reliability. The whole building shall be properly grounded according to the Woodland Pulp E&I Grounding Standards.

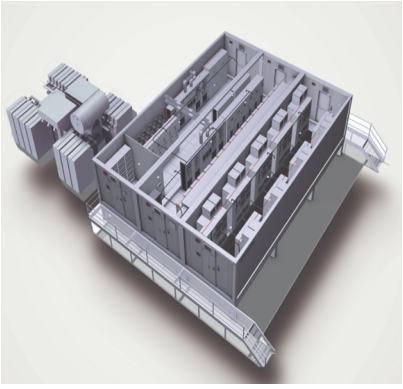

3) MVMCC "Line Ups" shall be properly separated from LVMCC "Line Ups"

4) All new LVMCC sections or "banks" shall be fed and exited from the bottom.

5) All new LVMCC sections or "banks" shall conform to the current NEC at a minimum unless these specifications indicated are stricter.

6) New installations clearances shall be 4 feet between equipment unless prebuilt to comply with article 110.26 table(A)(1)

## ***LVMCC SECTIONS OR "BANKS"***

1) All MCC sections or "banks" shall be labeled across the top with no less than 4-inch yellow label using one line and large bold black print as shown fig 1. This label will denote motor control center equipment name. in the format of MCC – MV Transformer Number – LV Feeder Number. These names will be the number, letter, or number letter combination. This Label shall be visible from across the room. As shown on fig 1. *Example:*

**MCC-83-01**

2) All LVMCC sections or "banks" shall be labeled on the incoming section at the top of incoming section with the feed or line designation in 4" yellow label using one line and large bold black print as shown fig 1. This label will be in the format of: Bus Letter – Bus Feeder Number – MV Transformer number – LV Feeder number. *Example:*

**A-22-83-01**

3) All LVMCC sections or "banks" shall be labeled on the incoming section under the feed or line designation label in 2.25 inch orange label with bold black lettering "INCOMING LINE". *Example:*

**INCOMING LINE**

4) All LVMCC sections or "banks" shall be labeled on the incoming section under the orange INCOMING LINE label with 2.25 inch orange labels "The incoming line VOLTAGE". *Example:*

**480 VOLTS**

5) All LVMCC sections or "banks" shall be labeled on the incoming section under the orange VOLTAGE label with 2.25 inch yellow labels "FED FROM LOCATION". *Example:*

**FED FROM**
**A-22**
**ER 39**

6) All LVMCC sections or "banks" will be fed from the bottom extremely lessening the water intrusion problems we have had in the past.

## ***LVMCC CUBICLES OR " BUCKET" NUMBERING***

1) All LVMCC cubicles shall be identified via letters and numbers as described below and shown on fig 1.

2) All LVMCC columns shall be labeled with first letter an ascending letter A – Z left to right, then second letter denoting front (F) or back (B) . Labels will be 2.25 inch blue label with bold white lettering as shown on fig 1. *Example:*

**AF**

3) All LVMCC cubicles shall have a cubicle number on them with 2.25 inch blue label with bold white number as shown on fig 1. *Example:*

**1**

4) All LVMCC cubicles shall be labeled with 2.25 inch black label with bold white letters "horse power, amperage of circuit breaker, and overload designation or setting". *Example:*

**75HP, 100AMP CB**
**OL SET @ 80 AMPS**

5) All LVMCC cubicles or "buckets" will constitute 1 space in this numbering system regardless of size, as shown on fig 1

## ***MVMCC SECTIONS OR "BANKS"***

1) All MVMCC sections or "banks" shall be labeled in the same manner as LVMCCs above.

2) All new installations of MVMCC sections or "banks" shall comply with the above standards for LVMCCs above

3) All MVMCC sections or "banks" shall be segregated from LVMCC sections or "banks"

3) New installations clearances shall be 5 feet between equipment unless prebuilt to comply with article 110.26 table(A)(1)

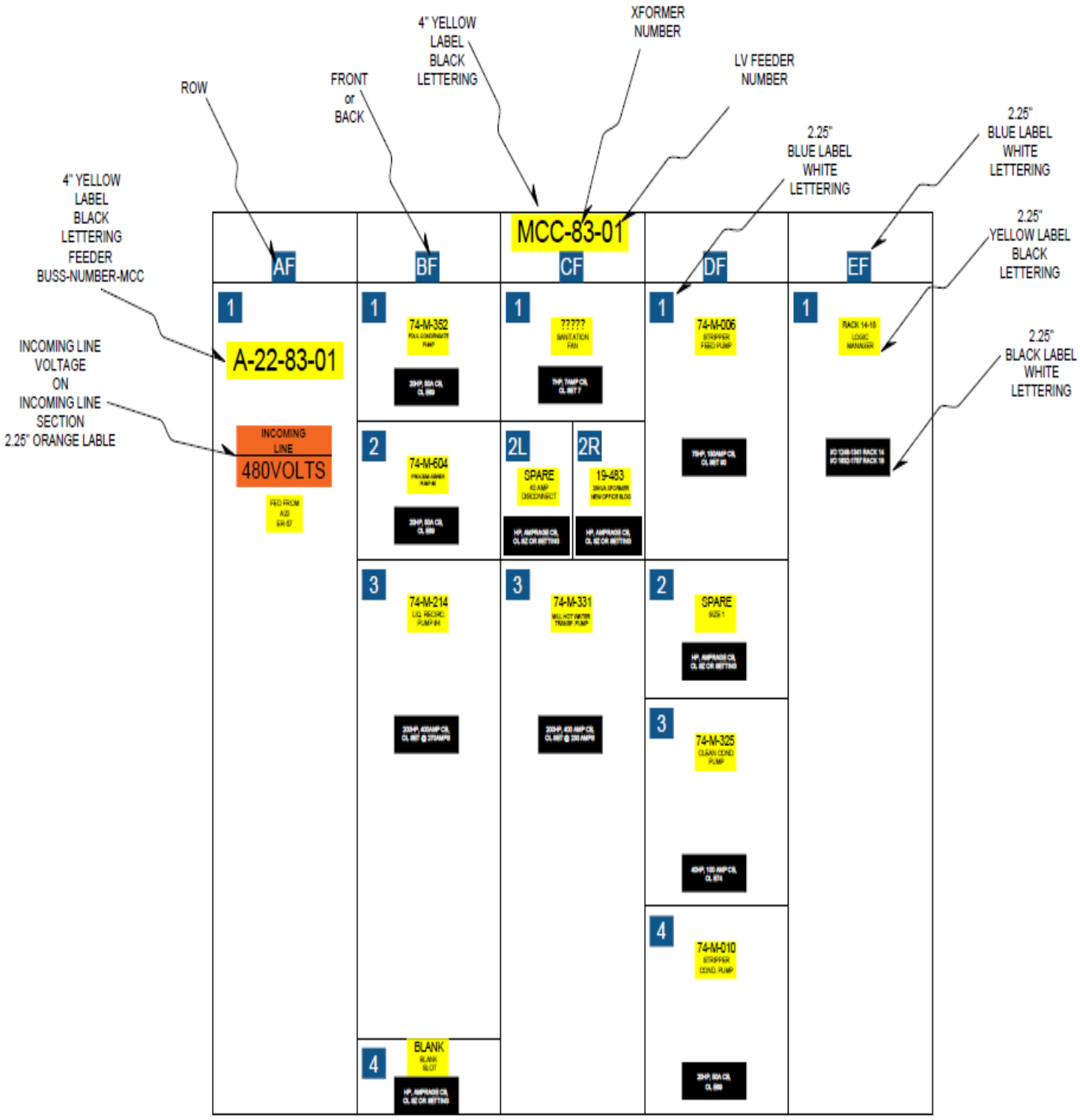


EXAMPLE

Fig. 1

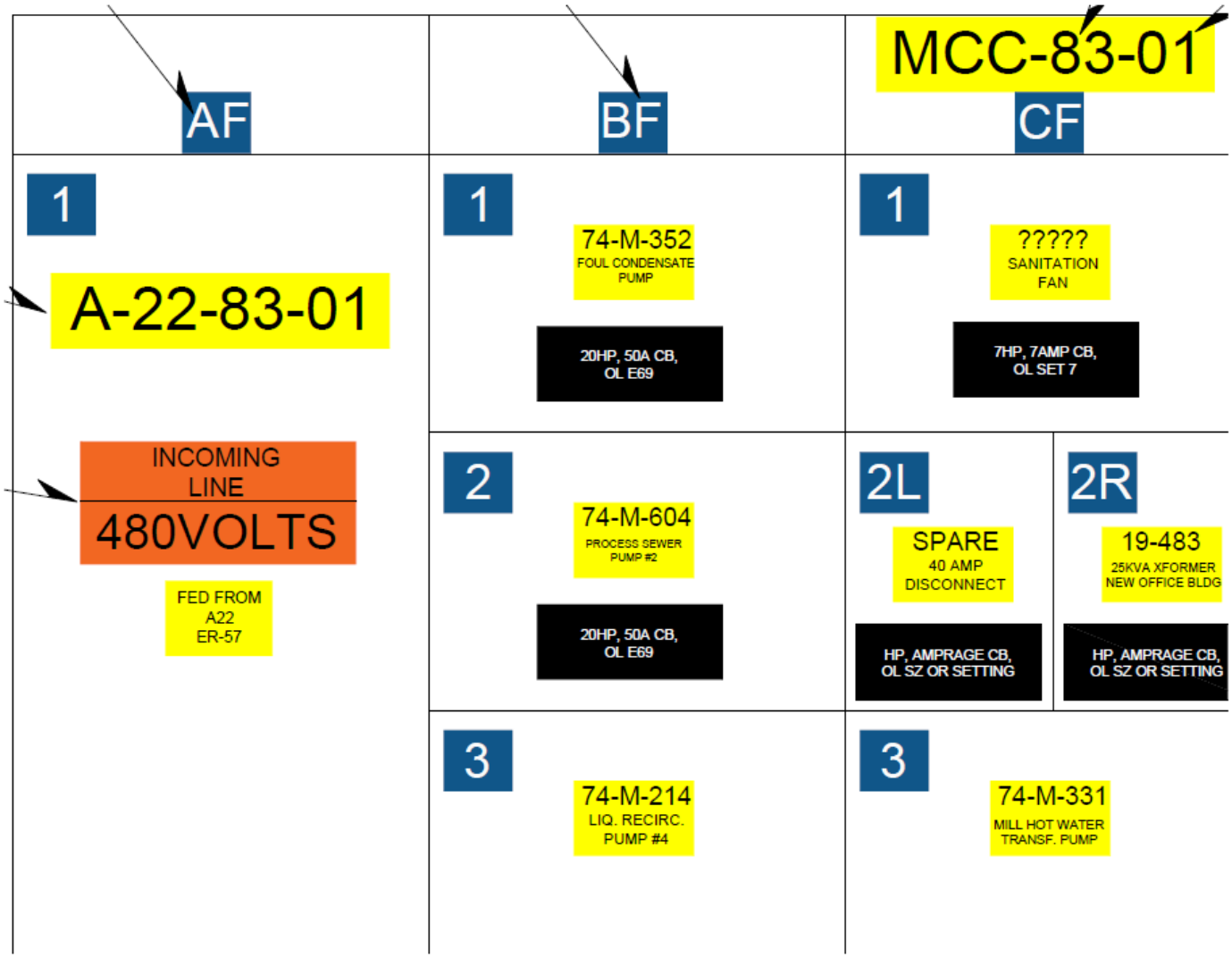


Fig. 1 (cont.)

NOTE: All labels shall be kept legible and clean and replaced as needed.

# WOODLAND PULP LLC

# NETWORKING INSTALLATION

# SPECIFICATIONS

# SECTION

# NETWORKING STANDARDS

This standard shall be used for any and all projects which encompass networking hardware or configuration.

**Networks**
Any modification to existing network or networks shall not be implemented without consulting the appropriate departments as listed below.

There are four major networks which are used throughout the mill. Each one is used for a different reason and can be connected to differently. This section will describe each network, its range of acceptable IP addresses, and who will have access to it.

**Mill/Business Network**
The Mill, or Business, Network (WOODLAND) is the one on which most computers reside. It is only network in the mill which is allowed access to the internet. This network has multiple subnets which it uses based on which Hub the computer is connected to. All subnets use IP addresses in the range: 172.28.XX.YYY where XX indicates the switch it is connected to and YY is an arbitrary number. Only certain computers are given a static IP address on this network, all others are assigned by a server automatically when they connect (this includes wireless devices like phones). All the mill's services (PI, SOMAX, Proficy, etc.) are only accessible from this network.

This network is managed by the IT department.

**Process Control Network**
The Process Control Network (PCNET) is the network where much of the PROCESS equipment resides. This includes, but is not limited to, operator/engineering stations, controllers, drives, and CEM systems. The network uses the range 172.17.6.XX where XX is assigned by the Process Control department when a device is added to the network. The drawings showing the configuration of this network (5614-0564) can be found on the drawings server. This network is primarily used to remotely monitor, maintain, backup, and program the DCS and other control systems.

This network is managed by the Process Control department.

**Insite Network**
The Insite Network is a network that Rockwell uses to remotely access some of our systems including drives and PLC's. This network uses the IP address range 10.128.66.XX where XX is assigned by the Process Control department and Rockwell. This network allows Rockwell to remotely monitor and backup our systems. The drawing showing the configuration of this network (NET-INSITE) can be found on the drawings server.

This network is managed by the Process Control department and Rockwell together.

**Local Networks**
All other networks which exist in the mill are used for local or point-to-point connections only. This is typically used for connections to local graphic panels, remote I/O cabinets, or isolated control systems. The IP addresses for these systems will vary from area to area but will be in the range 192.168.XX.YY where XX and YY are as follows:

| Area | IP address range (XX) |
|---|---|
| Pulp Dryer | 1 – 99 |
| Kraft Mill | 100 – 199 |
| Utilities | 200 – 255 |

| Application | IP address range (YY) |
|---|---|
| CPU and I/O Racks | 1 – 99 |
| Drives | 100 – 199 |
| Panelview/HMI | 200 – 255 |

These networks are managed by the Process Control department and the E&I departments for the areas they reside in.

**Cable Standards**
When connecting networked systems together, there are different mediums which can be used. Fiber and Cat6 Ethernet are the primary mediums used. Depending on the distance, priority, and type of connection needed the medium will be slightly different.

**Fiber**
Fiber shall be used for any connection which requires multiple connections or significant spare connections and is more than 250 feet away

All Fiber shall be no less than 48 strands when pulled from building to building

Fiber shall use ST type connectors for all multimode fiber terminations

Fiber shall use LC type connectors for all singlemode fiber terminations

All patch panels which are not in a rackmount cabinet shall be in a NEMA 4X enclosure

All Fiber shall be at a minimum 12 strands, except for patch cables

Singlemode fiber shall be used for all distances greater than 1km

Approval by Woodland Pulp E&I Management is required to select the fiber type used for all applications less than 1km in length

**Cat6 Ethernet**
Cat6 Ethernet can only be used on a connection which is less than 250 feet

All Cat6 Ethernet connections shall use Type T568B terminations on both ends (per IEEE standards)

See cable standards for more details

**Networking Hardware**
There are many different applications for various devices used in networking.

- Ethernet Switches
  - Rackmount Switches
    - All Rackmount switches in the mill shall be Cisco rackmount switches with a minimum of 24 ports and 2 uplink ports unless the IT or Process Control department indicate otherwise
  - Din Rail
    - All Din Rail mounted switches will use an N-TRON 110FX2-ST switches for applications involving less than 6 Ethernet connections and multimode fiber
    - For applications requiring more than 6 ethernet connections, Woodland Pulp E&I management shall select the appropriate device to use
    - When a managed switch is required a Stratix switch shall be used with the part number 1783BMS10CGP
  - Desktop
    - All desktop switches will have use 120V wall port power
    - All desktop switches will be gigabit type switches
    - All desktop switches will have 5- 16 ports
    - All desktop switches will have at least 2 spare ports
- Media Converters

- All media convertors which require 120V power and do not reside on a Din Rail will use a media converter which has the following criteria
    - ST type connectors for multimode fiber applications
    - LC type connectors for singlemode fiber applications
    - Singlemode or multimode type fiber connection which fits the application
    - It must be rated for temperatures as low as -10 degrees Fahrenheit and as high as 140 degrees Fahrenheit
- All applications which require 24V power or are Din Rail mounted will use an N-TRON 110FX2-ST Ethernet switch with multimode fiber ports

WOODLAND PULP LLC

MOTOR REPAIR

SPECIFICATIONS

SECTION

**NEW MOTOR SPECIFICS**
**1. INTRODUCTION** **40**

**2. NEW MOTOR SPECIFICATIONS**

**MOTOR REPAIR SPECIFICS**
**1. INTRODUCTION** **41**

**2. RECORD KEEPING & IDENTIFICATION** **41**

**3. RECEIPT INSPECTION** **42**

**4. DISASSEMBLY** **43**

**5. MECHANICAL CHECKS & REPAIR PROCEDURES** **43**

**6. OVERHAUL AND REWIND PROCEDURES** **46**

**7. FINAL TESTS** **48**

**8. ELECTRICAL TESTS** **49**

**9. VIBRATION STANDARDS** **50**

**10 TABLES** **52**

## *NEW MOTOR SPECIFICS*

## *1. INTRODUCTION*

***1.1. PURPOSE*** - To establish uniform procedures to achieve high quality electric motors while minimizing the negative effect on motor efficiency.

***1.2. SCOPE*** - This standard covers all motors for which there are no contrary machine manufacturer's specifications or standards available. It does not apply to special duty apparatus, such as UL explosion proof motors. In the event of a conflict or uncertainty, the source materials, original equipment manufacturer documents, or other standards should be referenced. Additional specifications in ANSI/EASA 100-2001 may be used if appropriate. The word "motor" will be used hereinafter to mean motor.

***1.3. REFERENCE SOURCES*** - The following documents and standards were used to establish the parameters, values and general scheme of this specification:

1.3.1. IEEE Standard 841-2009, IEEE Standard for Petroleum and Chemical Industry—Premium-Efficiency, Severe-Duty, Totally Enclosed Fan-Cooled (TEFC) Squirrel Cage Induction Motors—Up to and Including 370 kW (500 hp)

## *2. NEW MOTOR STANDARDS*

***2.1. WOODLAND PULP LLC MOTOR STANDARD*** – All motors for woodland pulp shall conform to IEEE Standard 841-2009 and any updates to this standard.

***2.2. PREFERED BRAND*** – All motors for Woodland pulp will be Baldor/ABB unless not available then a substitute will be approved based on time availability and conformance with IEEE Standard 841-2009 and any updates to this standard.

## *MOTOR REPAIR SPECIFICS*

## *1. INTRODUCTION*

***1.1. PURPOSE*** - To establish uniform procedures to achieve high quality diagnosis, repair and/or overhaul of electric motors while minimizing the negative effect on motor efficiency.

***1.2. SCOPE*** - This standard covers all motors and generators for which there are no contrary machine manufacturer's specifications or standards available. It does not apply to special duty apparatus, such as UL explosion proof motors. In the event of a conflict or uncertainty, the source materials, original equipment manufacturer documents, or other standards should be referenced. Additional specifications in ANSI/EASA 100-2001 may be used if appropriate. The word "motor" will be used hereinafter to mean motor and/or generators.

***1.3. REFERENCE SOURCES*** - The following documents and standards were used to establish the parameters, values and general scheme of this specification:

1.3.1. NEMA Standards Publication No. MG 1-1993 Motors and Generators

1.3.2. IEEE Standard 43-2000, Recommended Practice for Testing Insulation Resistance of Rotating Machinery

1.3.3. IEEE Standard 112-1996, Standard Test Procedure for Polyphase Induction Motors and Generators

1.3.4. IEEE Standard 113-1985, Test Procedures for DC Machines

1.3.5. IEEE Standard 115-1995 (Reaff. 2002), Guide: Test Procedures for Synchronous Machines

1.3.6. EASA/ANSI Standard AR100-2001 Recommended Practices for The Repair Of Electrical Apparatus

1.3.7. EASA Technical Manual and Tech Notes

1.3.8. General Motors/Delphi Vibration Specification No. V1.0a-1999

1.3.9. IEEE Standard 841-2009, IEEE Standard for Petroleum and Chemical Industry—Premium-Efficiency, Severe-Duty, Totally Enclosed Fan-Cooled (TEFC) Squirrel Cage Induction Motors—Up to and Including 370 kW (500 hp)

***1.4 IN-HOUSE MOTOR REPLACEMENT*** – When removing a motor to be sent out for repair, motors will not be sent without splice boxes and lifting bolts. If splice boxes or lifting bolts cannot be sent out with the motor then approval shall be required to send the motor out for repair.

***1.5. SUBCONTRACTED WORK*** - If any work must be subcontracted (e.g., rotor balancing) or any subassemblies (e.g., formed coils) are to be provided by outside sources, Woodland Pulp shall be advised of the providers of these parts/services as soon as it is known they are required.

***1.6. UNAVOIDABLE DEGRADATION*** - Any repair that may result in a permanent degradation of motor efficiency or other performance parameters must be approved by Woodland Pulp LLC E/I management before the work is begun, and the motor nameplate shall be altered to reflect the change.

***1.7. STATEMENT OF INTENT*** - Any repair that is made will be made to bring repaired motor in line with IEEE Standard 841-2009.

***1.8. NOTE*** - Currently any RPM 40HP and above will be repaired as well as any HP 1200 RPM and below or any specialty motor will be checked on value of repair vs cost of new

## 2. RECORD KEEPING & IDENTIFICATION

***2.1.*** All new motors purchased from the repair facility and any existing Woodland Pulp motors that are sent to the shop for repair will be assigned an identification number before they are shipped or returned. The repair facility is responsible for providing an identification number and sending the tag to the Woodland Pulp for motors that are shipped after normal business hours or for motors sold by them that are shipped directly from the manufacturer to the facility. This information will be used to assist Woodland Pulps with tracking warranty periods and establishing a repair history on individual motors.

***2.2.*** A record shall be established for each machine evaluated in the repair shop or on-site. The record should include the nameplate data, electrical test data (both before and after repair), mechanical measurements (both before and after repair), original winding data, final winding data, and details of replaced parts. The record should be made available to the Woodland Pulp E/I management for review if requested.

***2.3.*** During the repair process, a tracking form will be used to record work done, problems noted, checks and measurements taken, repairs carried out and values from all tests conducted. An approved method of identifying and tracking the pieces of a motor through the repair process shall also be used. Upon completion of the repair, the tracking form should be added to the equipment file.

## 3. RECEIPT INSPECTION

***3.1. SHAFT***

3.1.1. Check shaft condition looking for wear, cracks, twisting, scoring, straightness, cold spray, corrosion, knurling and/or peening.

3.1.2. Examine keyway for damage and overall condition.

***3.2. FRAME***

3.2.1. Examine feet for breakage, cracks, material buildup, and condition of the mounting bolt holes. Make sure that all feet are true and level and true to each other foot.

**Commented [JH1]:** Greg to add wording from engineering book

3.2.2. Examine fan cover for cracks, breaks, and missing or damaged guards.

3.2.3. If applicable, check for and record condition of vents, covers, air deflectors and screens.

3.2.4. Check for damaged and/or missing bolts, including lifting bolts, and repair/replace as needed.

***3.3. LEADS***

3.3.1. Examine overall lead condition, check and record length.

3.3.2. Note any lead markings and reapply or clarify.

3.3.3. Examine leads for terminations and note condition. Pay particular attention to the quality of any crimping/brazing that may have been done to attach lugs.

3.3.4. All motors to be phased correctly for a clockwise rotation and labeled as such (T1, T2, T3 on motor leads), unless otherwise specified.

***3.4. ACCESSORIES AND MISCELLANEOUS ITEMS*** - Examine and record the condition and presence of such items as:

3.4.1. RTDs and thermocouples

3.4.2. Brakes

3.4.3. Seals

3.4.4. Terminal boxes (all motors will be returned with terminal boxes)

3.4.5. Couplings

3.4.6. Tachometers and resolvers

3.4.7. Fans

## 4. DISASSEMBLY

***4.1. ELECTRIC TESTS*** – The following electrical tests shall be performed. For particular test procedures, values and tolerances see ELECTRICAL TESTS section

4.1.1. Megger - AC & DC motors

4.1.2. Surge comparison - AC & DC motors

4.1.3. Hi-Pot - AC & DC motors

4.1.4. Phase balance - AC motors

4.1.5. Voltage drop - DC motors and Synchronous rotors

4.1.6. Polarity test - DC motors

4.1.7. Resistance test – AC & DC motors and Synchronous rotors

***4.2. CORE LOSS TEST*** - A core loss test must be done on all stators both before burn out and after stripping and iron repair, to check for damaged interlaminar insulation. See the Core Loss Test

## 5. MECHANICAL CHECKS & REPAIR PROCEDURES

***5.1. SHAFT AND KEYWAY*** - All physical/mechanical test equipment used for precision measurements must be part of an established calibration program.

Table 1: Shaft Extension Diameter Tolerances - NEMA Frame Motors (Page 12)

Table 2: Shaft Extension Diameter Tolerances - IEC Frame Motors (Page 12)

Table 3: Permissible Shaft Extension Runout - NEMA Frame Motors (Page 12)

Table 4: Permissible Shaft Extension Runout - IEC Frame Motors (Page 13)

Table 5: Shaft Extension Keyway Width Tolerances - NEMA Frame Motors (Page 13)

Table 6: Shaft Extension Keyway Width Tolerances - IEC Frame Motors (Page 13)

***5.2. FRAME AND BEARING HOUSINGS COOLING FANS***

5.2.1. Frame and bearing housings shall be examined for defects. Cracks and breaks shall be repaired, and fits restored to manufacturer's specifications.

5.2.2. Machine mounting surface tolerances, eccentricity and face runout should be within the tolerances specified in the following tables:

5.2.3. Fan will be as big as can fit in the fan shroud to provide maximum cooling and reduce the overheating failure rate

5.2.4. Cracked, damaged, or broken fans shall be replaced as per 5.2.3

Table 9: Mounting Surface Tolerances, Eccentricity and Face Runout for NEMA Type C and Type D Mounting Motors (Page 15)

Table 10: Mounting Surface Tolerances, Eccentricity and Face Runout for NEMA Type P Flange-Mounting Motors (Page 15)

Table 11: Mounting Rabbet (Spigot) Diameter Tolerances - IEC Flange-Mounted Motors (Page 16)

Table 12: Mounting Surface Eccentricity And Face Runout IEC Flange-Mounted Motors (Page 17) Table 9: Mounting Surface Tolerances, Eccentricity and Face Runout for NEMA Type C and Type D Mounting Motors (Page 15)

***5.3. BEARINGS***
Table 14: Radial Ball Bearing Fit Tolerances (Page 19)

Table 15: Cylindrical Ball Bearing Fit Tolerances (Page 20) Woodland Pulp, LLC Woodland Pulp LLC Motor Repair Specification 2017-1.doc– Rev.0 Page 6 of 27

5.3.2. Bearings shall be FAG brand. If FAG are unavailable, SKF, or another Woodland Pulp approved equivalent can be substituted. Bearings should be purchased through the bearing manufacturer's authorized distributorship. Woodland Pulp must approve the use of any bearing purchased through non-authorized distributors. Standard bearings will be pre-packed, double shield, EM grade, or C3. See requirement in the documentation section of this specification that requires a metal tag identifying bearing information.

5.3.3. Any fits not within tolerance should be restored. Insulated housings must be noted and rebuilt to original specs

5.3.4. Welding and brazing will be done only by individuals with current certifications.

5.3.5. Bore and bush is the standard repair for worn or damaged housings. Loctite, knurling, etc. is not acceptable. Machined surfaces will be treated with machinist bluing or approved alternative.

5.3.6. Repair will be made by plating instead of flame spray metalizing as the standard repair for worn or damaged journals and shafts.

5.3.7. Bearings will be installed using an induction heater with an automatic degaussing cycle. The temperature of the bearing should not exceed 230 degrees F, nor should any open flame be used to heat the bearing.

5.3.8. Sleeve bearings should be uniform in diameter, proper housing fit, smooth internally and suitably grooved for adequate distribution of lubricant. When sleeve bearings are remanufactured or replaced by new bearings, fit in the housing and the diametral clearance should be set to the manufacturer's specifications, if available. The values in the following table are provided as a guide.

Table 7: Oil-Lubricated Sleeve Bearing Diametral Clearance Guide - Horizontal Mounting (Page 14)

5.3.9. Sleeve bearings on horizontal motors should be positioned on the shaft to eliminate end-thrust against either bearing.

5.3.10. Seal clearances should be set to the manufacturer's specifications, if available. The values in the following table are provided as a guide. Measure and record the final seal dimensions.

Table 8: Labyrinth Seal Diametral Clearance Guide (Page 14)

***5.4. LUBRICATION***

5.4.1. The shield facing the grease cavity will be removed on all motors equipped with grease fittings and relief.

5.4.2. Motors not equipped with grease fittings will be drilled and tapped to accommodate said fittings. Extensions will be added as necessary to allow greasing during motor operation. And self-bleeding ports will be installed on all grease drains

5.4.3. In the absence of a manufacturer's lubrication specification or a special request from Woodland Pulps, all grease cavities will be filled to approximately 1/3 to ½ capacity.

5.4.4. Sleeve or other bearings that run in oil will be drained following the test run and an "add oil" tag attached.

5.4.5. The standard grease shall be a polyurea type, unless otherwise specifically requested by Woodland Pulp.

5.5.1. All rotating components will be two plane dynamically balanced, unless specifically noted to the contrary.

5.5.2. Balancing will be performed with a half key and all fans or other related rotating components in place.

5.5.3. Balance weights must be located so that they do not interfere with other components.

***5.5. BALANCING***

5.5.4. Dynamic balancing shall be performed to a quality grade G1 for 1800 RPM machines and above at a minimum and G2.5 (ISO 1940/1) for all others, which should enable the motors to meet final vibration limits as specified in the VIBRATION SPECIFICATIONS (Page 10) of this standard.

5.5.5. All 326T and above TEFC motors, both new and rebuilt, will have vibration pads installed.

***5.6. SLIP RINGS***

5.6.1. The slip rings should be turned to concentricity with the shaft bearing seats.

5.6.2. The surface of the finished rings should be smooth and polished.

5.6.3. Slip rings should have sufficient stock to ensure proper brush performance. Manufacturer's limits should apply.

***5.7. COMMUTATOR***

5.7.1. The commutator should be turned to concentricity with the shaft bearing seats.

5.7.2. The surface of the machined commutator should be smooth and burnished. No flat spots or high, low, or loose segments should exist.

5.7.3. Armature (commutator) slots will be hand undercut and chamfered. The use of automatic under-cutters, and/or "V" blades is not permitted.

5.7.4. The commutator should have sufficient stock to ensure proper brush performance. Manufacturer's limits should apply.

***5.8. BRUSH HOLDERS***

5.8.1. Movable brush holder parts should be free working. The brush fit in the brush holder box should be inspected for excessive clearance and worn brush holders should be replaced. Clearances should be as specified in Table 13: Brush-To Brush Holder Clearance (Page 18)

5.8.2. Brush stud insulation should be free of cracks and should not be charred or have pieces missing.

5.8.3. In the final assembly of motors, brush holders should be adjusted for clearance to the commutator or slip rings of 0.060 inch (1.5 mm) to 0.125 inch depending on the size of the unit. Manufacturer's specifications should apply.

5.8.4. Any apparatus with brushes will have the brushes fully seated to allow maximum contact with the ring or commutator.

***5.9. BRUSHES***

5.9.1. The face of the brush should be seated or contoured to make full contact with the commutator surface or slip rings. The brush fit in the brush holder box should be inspected for side clearance and for excessively worn brushes. Table 13: Brush-To Brush Holder Clearance (page 18) Brushes worn beyond useful length should be replaced.

5.9.2. Brushes in the same circuit of a motor should be of the same grade unless otherwise specified by the manufacturer.

5.9.3. Brush and brush holder replacement parts will be Helwig products unless otherwise required or specified.

5.9.4. Brush spring tension shall be measured and recorded.

***5.10. AIR GAP MEASUREMENT OF DC MOTORS***

5.10.1. In DC motors, the radial length of all main and interpole air gaps should be uniform and to original manufacturer's specification.

## 6. OVERHAUL AND REWIND PROCEDURES

***6.1. CLEANING AND PREPARATION***

6.1.1. All components will be appropriately cleaned, rinsed, and dried. Units' pressure washed will be baked dry in an oven. The temperature shall not exceed 250 degrees F.

6.1.2. Surfaces requiring blasting will be bead blasted using a media that will not damage laminations or other components. Fits will be protected from media damage.

***6.2. REWIND DETAILS***

6.2.1. Prior to rewinding a unit, data will be taken and if possible, verified with the original specification for the machine or other reliable source. It should not be assumed that duplicating the winding as found will be adequate. If it appears that, a motor has been rewound before and the windings as received are below the original manufacturer's specifications, Woodland Pulp must be notified. If a redesign is necessary, the data can be verified by reliable sources, such as EASA or the equipment manufacturer.

6.2.2. Burnout oven temperature will be set at a maximum of 750 degrees F, and a chart recorder will be used to create a record of the burnout run's duration and temperature. The temperature sensor in the oven should measure the temperature of the equipment and not just the air temperature. The burnout oven must use a water spray system to cool the oven if temperature starts to go above the high limit.

6.2.3. Random-wound coils shall be wound using a tensioning device and should be inserted in the core slots with a minimum of crossed conductors.

6.2.4. Form-wound coil fabrication should be accomplished by a qualified manufacturer.

6.2.5. Thermostats, resistance temperature detectors (RTDs), thermocouples, and thermistors should be identical with or equivalent to the original devices in electrical and thermal characteristics and placed at the same locations in the winding. Thermal protectors or sensors should not be removed or omitted without authorization from Woodland Pulp.

6.2.6. End windings will be shaped and laced as needed to provide the necessary clearance to the rotor, stator, and frame, bearing housings, air deflectors, and frame hardware. End windings should be able to endure starting currents. On larger motors where surge rings (coil supports) are used, the rings should be suitably insulated, accurately fitted and laced to the coils to ensure adequate support for the winding. Blocking between coils on end windings of formed coils should equal or exceed the original in strength against end winding movement. Tie wraps or wire ties are not to be used to secure wire or other components in motors or generators. Securing shall be accomplished with flat tie cord, and knots shall be air dry varnished.

6.2.7. Rewinds will be done in class "H" materials (the exception being leads, which can be of Hypalon). Nomex will be used as ground wall insulation.

6.2.8. Lead terminations must be crimped using ratcheting crimpers and dies matched to the lug, both by size and manufacturer.

6.2.9. Rewinds will be done to Variable Frequency Drive (VFD) compatible standards, i.e., inverter spike resistance wire, phase blankets, and turn sleeving will be used.

6.2.10. An automatic process must be used for resin treat, either Vacuum Pressure Impregnation (VPI) or Dipping. No manual processing can be done without specific approval from Woodland Pulp. Rewound units will be resin treated with a minimum of two cycles through one of the defined processes. In the case of VPI, the manufacturer's procedure will be followed.

6.2.11. The VPI and dipping processes shall both use approved resins. Resin sampling shall take place at least quarterly to ensure uniformity and quality.

6.2.12. The baking cycle following resin treating shall be done to the resin manufacturers specifications as long as the high temperature limit does not exceed 350 degrees F.

6.2.13. Resin treatment for random-wound coils will be two complete cycles of the dipping process. VPI process or treatment for random-wound coils should only be done if requested.

6.2.14. Form-wound coils will receive two complete cycles of VPI processing.
6.2.15. Resin treat will not automatically be used on overhauled windings. If the dielectric and mechanical properties of the existing resins are acceptable, retreating may not be necessary or desirable.

6.2.16. Leads shall be marked with either tags or tape. Magic marker, paint pens, etc. are not acceptable.
6.2.17. Neutral must be set and marked on all DC units.

*6.3. PAINTING & IDENTIFICATION*

6.3.1. Interior metal surfaces will be painted with VSPE-208 or an approved alternative.

6.3.2. Exterior parts and surfaces will be primed, painted with machine gray enamel, and the nameplates will be reattached. Fasteners used to attach the nameplates and data plates must be non-corrosive.

6.3.3. Repaired motors will have a metal tag attached adjacent to the manufacturer's nameplate that identifies the repair company, shop location that performed the repair, shop order number, date, and type of repair.

6.3.4. All motors will be weighed, and units weighing more than 20 pounds will have the weight stenciled to the motor in a prominent position. Motors weighing more than 500 #'s will be returned on a steel shipping skid.

6.3.5. When bearings are replaced, a tag shall be attached to the motor that identifies the bearing manufacturer, part numbers, and if applicable, any INPRO seal data. This information must be provided for both the drive and opposite drive ends of the motor.

6.3.6. All new and repaired motors intended for lateral loading that contain a roller bearing will be visibly identifiable. The motor end bell that has the roller bearing will be painted yellow and have "Belt Duty" stenciled on to provide an instant means of identification.

## 7. FINAL TESTS

***7.1. ELECTRIC TESTS*** – The following tests shall be completed and results documented.

7.1.1. Megger (AC & DC motors)

7.1.2. Polarization Index (PI)

7.1.3. Hi-Pot

7.1.4. Surge comparison

7.1.5. Resistance

***7.2. MECHANICAL AND MISCELLANEOUS TESTS***

7.2.1. Idle run test for a period sufficient to guarantee the proper electrical and mechanical functioning of the unit. Final idle tests will be run at full nameplate voltage
7.2.2. Vibration analysis
7.2.3. Shaft run out & end play
7.2.4. All DC motors will be full load tested.

## 8. ELECTRICAL TESTS

8.1. All electronic test equipment used for precision measurements must be part of an established calibration program.

8.2. Megger - The Megger test results must be recorded. The test should be done at a 500 volts DC for windings rated less than 1000 volts, line-to-ground for single-phase motors, line-to-line for 3 phase AC motors and rated direct voltage for DC motors. The test voltage should be applied for one minute (reference IEEE Standards Section 5.4 and 12.2). Acceptable readings are one Meg per thousand volts plus, one Meg on pre-1970 insulation and five Meg for 600-volt class motors. DC windings made after 1970 should have a minimum of 100 megohms.

8.3. Hi-Pot (AC & DC motors) - The Hi-Pot test voltage levels and results must be recorded. To avoid overstressing the winding during the test, bring the DC voltage up slowly while monitoring values. See the tables below for test voltage levels. NOTE: No distinction is made between new and old windings for the test voltage applied.

Table 16: High-Potential Test Using AC - New Windings (Pages 21 & 22)

Table 17: High-Potential Test Using DC - New Windings (Pages 23 & 24)

Table 18: High-Potential Test Using AC - New Accessories (Page 25)

Table 19: High-Potential Test Using DC - New Accessories (Page 25)

8.4. Polarization Index or PI - This test is a trending test, which looks at the overall condition of the insulation by performing a Megger test at 500 VDC for ten minutes. Record the resistance readings at one and ten minutes. The PI ratio of the ten-minute reading to the one-minute reading should be greater than 2 and less than 5.

8.5. Surge Comparison – (AC & DC motors) - surge comparison testing is the recommended test for finding phase-to-phase and turn-to-turn winding problems. A bar-to-bar test is equivalent to Surge Comparison Tests on DC motors.

8.6. Resistance test – (AC & DC motors) - This test compares phases to each other by checking the resistance of each circuit. The difference between all circuits should be less than 5%. Woodland Pulp, LLC Woodland Pulp LLC Motor Repair Specification 2017-1.doc– Rev.0 Page 11 of 27

8.7. Phase Balance (stator only or wound rotors) - phase balance looks at each phase as compared to the others with the electrical excitation that is missing on the resistance test. Voltage is applied to all three phase of a motor without its rotor being installed, the current is measured, and all phases should be within 5% of each other.

8.8. Voltage Drop Test – (DC motors & AC synchronous pole pieces) – voltage drop is the equivalent of the phase balance test. Volt drop tests can be run using either AC or DC voltage and if all the windings are the same, the volt drop across all coils or poles should be within 5%.

8.9. Core Loss Test – (AC & DC motors) - If hot spots exceed the average temperature by 10 degrees F after 10 minutes, or losses are excessive overall either before or after stripping, the repair shops recommendations should be discussed with the Woodland Pulp before proceeding with repairs. For a core without any hot spots, the losses after stripping shall not be more than 3% higher than the pre-strip losses. To avoid misleading results, the second core loss test should not be done until the core has been cleaned and dried.

8.10. Brush Tension – On motors with brushes the brush spring tension should be measured using the Helwig tension gauge the reading should be documented.

## 9. BALANCE AND VIBRATION STANDARDS

9.1. All new and rebuilt motors shall conform to the General Motors/Delphi Vibration Specification No. V1.0a. An Adobe PDF version of the standard can be downloaded from the following web site:
http://www.smrp.org/images/pdf/gmvibration.pdf

9.2. The GM specification defines motors in one of 3 categories:

9.2.1. Standard motor, utility operations

9.2.2. Special motor, semi-finish operations

9.2.3. Precision motor, finish operations

9.2.4. Motors covered by this document shall be grouped into the standard motor category unless manufacturer specifications specifically list tolerances that would move the motor to a higher level.

***9.3. TEST SPEEDS***

9.3.1. For motors with a synchronous speed up to 1800 RPM, the frequency range for motor certification will be from Fmin = 0.3 X running speed (synchronous speed) to Fmax = 180,000 CPM.

9.3.2. For motors with a synchronous speed up to 3600 RPM, the frequency range for motor certification will be from Fmin = 0.3 * running speed (synchronous speed) to Fmax = 360,000 CPM.

9.3.3. AC motors will be tested at rated voltage and frequency, and no load

9.3.4. Single speed AC motors will be tested at synchronous speed.

9.3.5. Multi-speed AC motors will be tested at their rated synchronous speeds.

9.3.6. AC Variable Frequency Drives motors and DC motors will be tested at their highest rated speed.

9.3.7. Series and universal motors will be tested at normal operating speed.

***9.4. MOTOR ISOLATION***

9.4.1. When tested in accordance with NEMA Standard MG 1, Section II, Part 12.07 “Method of Measuring Motor Vibration.” all rebuilt motors shall conform to the vibration limits specified in Table 21 and Table 22.

9.4.2. When tested in accordance with NEMA Standard MG1, Section III, Part 20.54 (Induction and Synchronous Motors), or Part 23.53 (DC Motors) all new and rebuilt Large Apparatus AC/DC motors shall conform to the vibration limits specified in Table 22.

***9.5. CRITICAL SPEED***

9.5.1. Completely assembled motors shall have a percentage separation between the rotor shaft first actual critical speed and the rated motor speed as specified in Table 20.

***9.6. VIBRATION LIMITS***

9.6.1. Electrical motors defined by NEMA Standard MG-1 “Motors and Generators, “Section II Small (Fractional) and medium (integral) Machines,” Part 12 “Tests and Performance AC-Motors/DC- Motors” shall meet the following requirements:

9.6.2. The Velocity Amplitude (Inch/Sec-Peak) of any line of resolution measured at bearing locations in any direction shall not exceed the Line-Amplitude Band Limit values specified in Table 21, using the frequency range define d in Section 9.3.1 and Section 9.3.2 of this document.

9.6.3. The Acceleration Overall Amplitude (g’s Peak) at bearing locations in any direction shall not exceed the Band-Limited Overall Amplitude Acceptance Limit values specified in Table 21 using the frequency range defined in Section 9.3.1 and Section 9.3.2 of this document

9.6.4. Electrical motors defined by NEMA Standard MG-1 “Motors and Generators,” Section III “Large Machines,” Part 20 “Induction Motors”, Part 21 “Synchronous Motors” and Part 23 “DC Motors” shall meet the following requirements:

9.6.5. The overall vibration level of displacement and velocity at bearing locations in any direction (Radial and Axial) shall not exceed the Band-Limited Overall Amplitude Acceptance Limit values specified in Table 22 when using the frequency range defined in Section 9.3.1 and 9.3.2.

## 10. RECIEPT INSPECTION

### *10.1. MOTORS RECEIVED BY WOODLAND PULP*

10.1.1. All motors received shall use the “**MM-03 SRC-060 Storeroom Receiving**” standard

10.1.2. Upon receipt all motors above 30 HP ERT shall be notified and shall inspect for:

10.1.2.1. Baker test and passed

10.1.2.2. Leads labeled

10.1.2.3. Fans are intact and full size of shroud

10.1.2.4. Lifting means exist

10.1.2.5. Splice box is present, in good condition, and all bolts present

10.1.2.6. Mill motor number documented and installed

10.1.3. All medium voltage motors shall follow all above inspection standards and motor datasheet shall be collected and entered in database. If datasheet is not present, motor manufacturer/repair shop shall be notified to provide one

**Table 1: Shaft Extension Diameter Tolerances - NEMA Frame Size Machines**

| DIMENSIONS IN INCHES | | | DIMENSIONS IN MILLIMETERS | | |
|---|---|---|---|---|---|
| Shaft Diameter | Tolerance | | Shaft Diameter | Tolerance | |
| 0.1875 to 1.5000 | +0.000 | -0.0005 | 4.76 to 38.1 | +0.000 | -0.013 |
| Over 1.5000 to 6.500 | +0.000 | -0.001 | Over 38.1 to 165.1 | +0.000 | +0.025 |

**Reference: NEMA Standards. MG 1.4.9.1**
**Dimensions shown in millimeters are rounded off.**

**Table 2: Shaft extension diameter tolerances - IEC Frame Size Machines**

| DIMENSIONS IN MILLIMETERS | | | | | DIMENSIONS IN INCHES | | | |
|---|---|---|---|---|---|---|---|---|
| Tolerance Designation | Nominal Shaft Diameter | | Tolerance | | Shaft Diameter | | Tolerance | |
| | Over | Up To | | | Over | Up To | | |
| j6* | 6 | 10 | +0.007 | -0.002 | 0.236 | 0.394 | +0.0003 | -0.0001 |
| j6* | 10 | 18 | +0.008 | -0.003 | 0.394 | 0.709 | +0.0003 | -0.0001 |
| j6* | 18 | 30 | +0.009 | -0.004 | 0.709 | 1.181 | +0.0004 | -0.0002 |
| k6 | 30 | 50 | +0.018 | +0.002 | 1.181 | 1.969 | +0.0007 | +0.0001 |
| m6 | 50 | 80 | +0.030 | +0.011 | 1.969 | 3.150 | +0.0012 | +0.0004 |
| m6 | 80 | 120 | +0.035 | +0.013 | 3.150 | 4.724 | +0.0014 | +0.0005 |
| m6 | 120 | 180 | +0.040 | +0.015 | 4.724 | 7.087 | +0.0016 | +0.0006 |
| m6 | 180 | 250 | +0.046 | +0.017 | 7.087 | 9.843 | +0.0018 | +0.0007 |
| m6 | 250 | 315 | +0.052 | +0.020 | 9.843 | 12.402 | +0.0020 | +0.0008 |
| m6 | 315 | 400 | +0.057 | +0.021 | 12.402 | 15.748 | +0.0022 | +0.0008 |
| m6 | 400 | 500 | +0.063 | +0.023 | 15.748 | 19.685 | +0.0025 | +0.0009 |
| m6 | 500 | 630 | +0.070 | +0.026 | 19.685 | 24.803 | +0.0028 | +0.0010 |

***In some countries, the k6 tolerance is used instead of j6. Reference: IEC Standards. 60072-1, C.1.4.**
**Dimensions shown in inches are rounded off**

**Table 3: Permissible Shaft Extension Runout - NEMA Frame Size Machines**

| 9.6.6. Dimensions in Inches | | 9.6.7. Dimensions in Millimeters | |
|---|---|---|---|
| 9.6.8. Shaft Diameter | 9.6.9. Shaft Runout* | Shaft Diameter | Shaft Runout* |
| 0.1875 to 1.625 | 0.002 | 4.76 to 41.3 | 0.051 |
| Over 1.625 to 6.500 | 0.003 | Over 41.3 to 165.1 | 0.076 |

***Maximum permissible change in indicator reading when measured at the end of the shaft extension.**
**Note: The permissible shaft runout tolerance has not been established where the shaft extension length exceeds the NEMA standard. However, runout for shafts longer than standard are usually greater than those indicated above and must be handled on an individual case basis. Reference: NEMA Standards. MG 1, 4.9.7.**
**Dimensions shown in millimeters are rounded off.**

**Table 4: Permissible Shaft Extension Runout - IEC Frame Size Machines**

| DIMENSIONS IN MILLIMETERS | | | DIMENSIONS IN INCHES | | |
|---|---|---|---|---|---|
| Nominal Shaft Diameter | | Shaft Runout* | Shaft Diameter | | Shaft Runout* |
| Over | Up To | | Over | Up To | |
| 6 | 10 | 0.030 | 0.236 | 0.394 | 0.001 |
| 10 | 18 | 0.035 | 0.394 | 0.709 | 0.001 |
| 18 | 30 | 0.040 | 0.709 | 1.181 | 0.002 |
| 30 | 50 | 0.050 | 1.181 | 1.969 | 0.002 |
| 50 | 80 | 0.060 | 1.969 | 3.150 | 0.002 |
| 80 | 120 | 0.070 | 3.150 | 4.724 | 0.003 |
| 120 | 180 | 0.080 | 4.724 | 7.087 | 0.003 |
| 180 | 250 | 0.090 | 7.087 | 9.843 | 0.004 |
| 250 | 315 | 0.100 | 9.843 | 12.402 | 0.004 |
| 315 | 400 | 0.110 | 12.402 | 15.748 | 0.004 |
| 400 | 500 | 0.125 | 15.748 | 19.685 | 0.005 |
| 500 | 630 | 0.140 | 19.685 | 24.803 | 0.006 |

**This table applies to rigid foot-mounted and flange-mounted machines.**
***Maximum permissible change in indicator reading when measured midway along the shaft extension length. Reference: IEC Standards. 60072-1, C.1.6.**
**Dimensions shown in inches are rounded off.**

**Table 5: Shaft Extension Keyseat Width Tolerances - NEMA Frame Size Machines**

| DIMENSIONS IN INCHES | | | DIMENSIONS IN MILLIMETERS | | |
|---|---|---|---|---|---|
| Width of Keyseat | Tolerance | | Width of Keyseat | Tolerance | |
| 0.188 to 0.750 | +0.002 | -0.000 | 4.78 to 19.1 | +0.051 | -0.000 |
| Over 0.750 to 1.500 | +0.003 | -0.000 | Over 19.1 to 38.1 | +0.076 | -0.000 |

**Reference: NEMA Standards MG 1, 4.9.2**
**Dimensions shown in millimeters are rounded off.**

**Table 6: Shaft Extension Keyseat (Keyway) Width Tolerances - IEC Frame Size Machines**

| DIMENSIONS IN MILLIMETERS | | | | DIMENSIONS IN INCHES | | | |
|---|---|---|---|---|---|---|---|
| Nominal Width of Keyseat (Keyway) | | Tolerance* | | Width of Keyseat (Keyway) | | Tolerance* | |
| Over | Up To | | | Over | Up To | | |
| 2 up to | 3 | -0.004 | -0.029 | 0.078 | 0.118 | -0.0002 | -0.0011 |
| 3 | 6 | 0 | -0.030 | 0.118 | 0.236 | 0 | -0.0012 |
| 6 | 10 | 0 | -0.036 | 0.236 | 0.394 | 0 | -0.0014 |
| 10 | 18 | 0 | -0.043 | 0.394 | 0.709 | 0 | -0.0017 |
| 18 | 30 | 0 | -0.052 | 0.709 | 1.181 | 0 | -0.0020 |
| 30 | 50 | 0 | -0.062 | 1.181 | 1.969 | 0 | -0.0024 |
| 50 | 80 | 0 | -0.074 | 1.969 | 3.150 | 0 | -0.0029 |
| 80 | 100 | 0 | -0.087 | 3.150 | 3.937 | 0 | -0.0034 |

**Table 7: Oil-Lubricated Sleeve Bearing Diametral Clearance Guide - Horizontal Mounting**

| DIMENSIONS IN INCHES | | | | DIMENSIONS IN MILLIMETERS | | | |
|---|---|---|---|---|---|---|---|
| Nominal Bearing Bore | | Diametral Clearance | | Nominal Bearing Bore | | Diametral Clearance | |
| Over | Up To | | | Over | Up To | | |
| 0.75 | 1 | 0.0015 | 0.0025 | 19 | 25 | 0.037 | 0.062 |
| 1 | 1.25 | 0.0030 | 0.004 | 25 | 32 | 0.075 | 0.100 |
| 1.25 | 2 | 0.0035 | 0.005 | 32 | 50 | 0.087 | 0.125 |
| 2 | 2.5 | 0.004 | 0.006 | 50 | 63 | 0.100 | 0.150 |
| 2.5 | 3 | 0.005 | 0.007 | 63 | 75 | 0.125 | 0.175 |
| 3 | 4 | 0.006 | 0.008 | 75 | 100 | 0.150 | 0.200 |
| 4 | 5 | 0.007 | 0.009 | 100 | 125 | 0.175 | 0.225 |
| 5 | 6 | 0.008 | 0.010 | 125 | 150 | 0.200 | 0.250 |
| 6 | 7 | 0.009 | 0.011 | 150 | 175 | 0.225 | 0.275 |
| 7 | 8 | 0.010 | 0.012 | 175 | 200 | 0.250 | 0.300 |
| 8 | 9 | 0.011 | 0.013 | 200 | 225 | 0.275 | 0.325 |
| 9 | 11 | 0.012 | 0.014 | 225 | 275 | 0.300 | 0.350 |
| 11 | 13 | 0.013 | 0.015 | 275 | 325 | 0.325 | 0.375 |
| 13 | 15 | 0.014 | 0.016 | 325 | 375 | 0.350 | 0.400 |
| 15 | 17 | 0.015 | 0.017 | 375 | 425 | 0.375 | 0.425 |
| 17 | 19 | 0.015 | 0.018 | 425 | 475 | 0.375 | 0.450 |
| 19 | 22 | 0.016 | 0.019 | 475 | 550 | 0.400 | 0.475 |
| 22 | 28 | 0.018 | 0.021 | 550 | 700 | 0.450 | 0.525 |

**Table 8: Labyrinth Seal Diametral Clearance Guide***
**SHAFT/SEAL CLEARANCES BASED ON .005" PER INCH OF DIAMETER**

| Shaft Diameter (- .002) | Bore Size (+.002) | Shaft Diameter (- .002) | Bore Size (+ .002) |
|---|---|---|---|
| 3.000 | 3.015 | 4.750 | 4.774 |
| 3.375 | 3.392 | 4.937 | 4.962 |
| 3.625 | 3.643 | 5.000 | 5.025 |
| 3.781 | 3.800 | 5.250 | 5.276 |
| 4.000 | 4.020 | 5.718 | 5.747 |
| 4.188 | 4.209 | 6.000 | 6.030 |
| 4.250 | 4.271 | 7.000 | 7.035 |
| 4.500 | 4.523 | — | — |

***Dimensions in inches.**

**Table 9: Mounting Surface Tolerances, Eccentricity and Face Runout**
**NEMA Type C Face-Mounting and Type D Flange-Mounting Motors**

| DIMENSIONS IN INCHES | | | | DIMENSIONS IN MILLIMETERS | | | |
|---|---|---|---|---|---|---|---|
| Rabbet Diameter | Tolerance on Diameter | | Eccentricity & Face Runout* | Rabbet Diameter | Tolerance on Diameter | | Eccentricity & Face Runout* |
| Less than 12 | +0.000 | -0.003 | 0.004 | Less than 304.8 | +0.000 | -0.076 | 0.102 |
| 12 to 24 | +0.000 | -0.005 | 0.007 | 304.8 to 609.6 | +0.000 | -0.127 | 0.178 |
| Over 24 to 40 | +0.000 | 0.007 | 0.009 | Over 609.6 to 1016 | +0.000 | -0.178 | |

***Maximum permissible change in indicator reading. Reference: NEMA Standards MG 1, 4.12, Table 4-5. Dimensions shown in millimeters are rounded off.**

**Table 10: Mounting Surface Tolerances, Eccentricity and Face Runout**
**NEMA Type P Flange-Mounting Motors**

| DIMENSIONS IN INCHES | | | | DIMENSIONS IN MILLIMETERS | | | |
|---|---|---|---|---|---|---|---|
| Rabbet Diameter | Tolerance on Diameter | | Eccentricity & Face Runout* | Rabbet Diameter | Tolerance on Diameter | | Eccentricity & Face Runout* |
| Less than 12 | +0.000 | +0.003 | 0.004 | Less than 304.8 | -0.000 | +0.076 | 0.102 |
| 12 to 24 | +0.000 | +0.005 | 0.007 | 304.8 to 609.6 | -0.000 | +0.127 | 0.178 |
| Over 24 to 40 | +0.000 | +0.007 | 0.009 | Over 609.6 to 1016 | -0.000 | +0.178 | 0.229 |
| Over40 to 60 | +0.000 | +0.010 | 0.012 | Over 1016 to 1524 | -0.000 | +0.254 | 0.305 |

*Maximum permissible change in indicator reading. Reference: NEMA Standards MG 1, 4.12, Table 4-6.
Dimensions shown in millimeters are rounded off.

**Table 11: Mounting Rabbet (Spigot) Diameter Tolerances**
**IEC Flange-Mounted Machines**

| DIMENSIONS IN MILLIMETERS | | | | | DIMENSIONS IN INCHES | | | |
|---|---|---|---|---|---|---|---|---|
| Tolerance Designation | Nominal Rabbet (Spigot) Diameter | | Tolerance | | Rabbet (Spigot) Diameter | | Tolerance | |
| | Over | Up To | | | Over | Up To | | |
| j6 | 30 | 50 | +0.011 | -0.005 | 1.181 | 1.969 | +0.0004 | -0.0002 |
| j6 | 50 | 80 | +0.012 | -0.007 | 1.969 | 3.150 | +0.0005 | -0.0003 |
| j6 | 80 | 120 | +0.013 | -0.009 | 3.150 | 4.724 | +0.0005 | -0.0004 |
| j6 | 120 | 180 | +0.014 | -0.011 | 4.724 | 7.087 | +0.0006 | -0.0004 |
| j6 | 180 | 250 | +0.016 | -0.013 | 7.087 | 9.843 | +0.0006 | -0.0005 |
| h6 | 250 | 315 | 0 | -0.032 | 9.843 | 12.402 | 0 | -0.0013 |
| h6 | 315 | 400 | 0 | -0.036 | 12.402 | 15.748 | 0 | -0.0014 |
| h6 | 400 | 500 | 0 | -0.040 | 15.748 | 19.685 | 0 | -0.0016 |
| h6 | 500 | 630 | 0 | -0.044 | 19.685 | 24.803 | 0 | -0.0017 |
| h6 | 630 | 800 | 0 | -0.050 | 24.803 | 31 .496 | 0 | -0.0020 |
| h6 | 800 | 1000 | 0 | -0.056 | 31 .496 | 39.370 | 0 | -0.0022 |
| h6 | 1000 | 1250 | 0 | -0.066 | 39.370 | 49.213 | 0 | -0.0026 |
| h6 | 1250 | 1600 | 0 | -0.078 | 49.231 | 62.992 | 0 | -0.0031 |
| h6 | 1600 | 2000 | 0 | -0.092 | 62.992 | 78.740 | 0 | -0.0036 |
| h6 | 2000 | 2200 | 0 | -0.110 | 78.740 | 86.614 | 0 | -0.0043 |

Note: This table applies to machines with FF, FT, and FI mounting flanges.
Reference: IEC Standards 60072-1, C.1.7.
Dimensions shown in inches are rounded off.

**Table 12: Mounting Surface Eccentricity - And Face Runout**
**IEC Flange-Mounted Machines**

| DIMENSIONS IN MILLIMETERS | | | DIMENSIONS IN INCHES | | |
|---|---|---|---|---|---|
| Nominal Rabbet (Spigot) Diameter | | Eccentricity & Face Runout* | Rabbet (Spigot) Diameter | | Eccentricity & Face Runout |
| Over | Up To | | Over | Up To | |
| 40 up to | 100 | 0.080 | 1.575 | 3.937 | 0.003 |
| 100 | 230 | 0.100 | 3.937 | 9.055 | 0.004 |
| 230 | 450 | 0.125 | 9.055 | 17.717 | 0.005 |
| 450 | 800 | 0.160 | 17.717 | 31.496 | 0.006 |
| 800 | 1250 | 0.200 | 31.496 | 49.213 | 0.008 |
| 1250 | 2000 | 0.250 | 49.213 | 78.740 | 0.010 |
| 2000 | 2240 | 0.315 | 78.740 | 88.189 | 0.012 |

**Note: This table applies to machines with FF, FT, and Ft mounting flanges.**
***Maximum permissible change in indicator reading.**
**Reference: IEC Standards 60072-1, C.7.**
**Dimensions shown in inches are rounded off.**

**Table 13: Brush-To Brush Holder Clearance**

| DIMENSIONS IN MILLIMETERS | | | DIMENSIONS IN INCHES | | |
|---|---|---|---|---|---|
| Nominal Brush Dimensions Width and Thickness | Clearance | | Nominal Brush Dimensions Width and Thickness | Clearance | |
| | Max. | Min. | | Max. | Min. |
| 1.6<br>2<br>2.5 | 0.144 | 0.044 | 1/16 | 0.0056 | 0.00175 |
| 3.2 | 0.158 | 0.050 | 1/8 | 0.0062 | 0.0020 |
| 4<br>5 | 0.178 | 0.050 | 3/16 | 0.0070 | 0.0020 |
| 6.3<br>8<br>10 | 0.193 | 0.055 | 1/4<br>5/16<br>3/8 | 0.0076 | 0.0022 |
| 12.5<br>16 | 0.232 | 0.072 | 7/16<br>1/2<br>5/8 | 0.0091 | 0.0028 |
| 20<br>25 | 0.254 | 0.080 | 3/4<br>7/8<br>1 | 0.0100 | 0.0032 |
| 32<br>40<br>50 | 0.300 | 0.100 | 1-1/4<br>1-1/2 | 0.0118 | 0.0039 |
| 64<br>80 | 0.330 | 0.110 | 1-3/4<br>2 | 0.0130 | 0.0043 |

**Reference: IEC Standards 60136, Table 1.**

**To avoid confusion between dimensions in millimeters and in inches, brushes, and brush holders may have markings as follows: metric dimensions□; inch dimensions Δ.**

**NOTE: Replacement of a brush made to inch dimensions with a brush made to millimeter dimensions (or vice versa) might cause problems because of an improper fit in the brush holder.**

Table 14: Radial Ball Bearing Fit Tolerances*

| Basic Number | SHAFT FITS (j5 and k5) | | | | HOUSING FITS (H6) | | | | | |
|---|---|---|---|---|---|---|---|---|---|---|
| | TOLER-ANCE CLASS | BEARING BORE mm | SHAFT DIAMETER (inches) | | Bearing OD mm | 200 Series Housing Bore (Inches) | | Bearing OD mm | 300 Series Housing Bore (Inches) | |
| | | | Max | Min | | Min. | Max. | | Min. | Max. |
| 00 | j5 | 10 | 0.3939 | 0.3936 | 30 | 1.1811 | 1.1816 | 35 | 1.3780 | 1.3786 |
| 01 | j5 | 12 | 0.4726 | 0,4723 | 32 | 1.2598 | 1.2604 | 37 | 1.4567 | 1.4573 |
| 02 | j5 | 15 | 0.5908 | 0.5905 | 35 | 1.3780 | 1.3786 | 42 | 1.6535 | 1.6541 |
| 03 | j5 | 17 | 0.6695 | 0.6692 | 40 | 1.5748 | 1.5754 | 47 | 1.8504 | 1.8510 |
| 04 | k5 | 20 | 0.7878 | 0.7875 | 47 | 1.8504 | 1.8510 | 52 | 2.0472 | 2.0479 |
| 05 | k5 | 25 | 0.9847 | 0.9844 | 52 | 2.0472 | 2.0479 | 62 | 2.4409 | 2.4416 |
| 06 | k5 | 30 | 1.1815 | 1.1812 | 62 | 2.4409 | 2.4416 | 72 | 2.8346 | 2.8353 |
| 07 | k5 | 35 | 1.3785 | 1.3781 | 72 | 2.8346 | 2.8353 | 80 | 3.1496 | 3.1503 |
| 08 | k5 | 40 | 1.5753 | 1.5749 | 80 | 3.1496 | 3.1503 | 90 | 3.5433 | 3.5442 |
| 09 | k5 | 45 | 1.7722 | 1.7718 | 85 | 3.3465 | 3.3474 | 100 | 3.9370 | 3.9379 |
| 10 | k5 | 50 | 1.9690 | 1.9686 | 90 | 3.5433 | 3.5442 | 110 | 4.3307 | 4.3316 |
| 11 | k5 | 55 | 2.1660 | 2.1655 | 100 | 3.9370 | 3.9379 | 120 | 4.7244 | 4.7253 |
| 12 | k5 | 60 | 2.3628 | 2.3623 | 110 | 4.3307 | 4.3316 | 130 | 5.1181 | 5.1191 |
| 13 | k5 | 65 | 2.5597 | 2.5592 | 120 | 4.7244 | 4.7253 | 140 | 5.5118 | 5.5128 |
| 14 | k5 | 70 | 2.7565 | 2.7560 | 125 | 4.9213 | 4.9223 | 150 | 5.9055 | 5.9065 |
| 15 | k5 | 75 | 2.9534 | 2.9529 | 130 | 5.1181 | 5.1191 | 160 | 6.2992 | 6.3002 |
| 16 | k5 | 80 | 3.1502 | 3.1497 | 140 | 5.51 18 | 5.5128 | 170 | 6.6929 | 6.6939 |
| 17 | k5 | 85 | 3.3472 | 3.3466 | 150 | 5.9055 | 5.9065 | 180 | 7.0866 | 7.0876 |
| 18 | k5 | 90 | 3.5440 | 3.5434 | 160 | 6.2992 | 6.3002 | 190 | 7.4803 | 7.4814 |
| 19 | k5 | 95 | 3.7409 | 3.7403 | 170 | 6.6929 | 6,6939 | 200 | 7.8740 | 7.8751 |
| 20 | k5 | 100 | 3.9377 | 3.9371 | 180 | 7.0866 | 7.0876 | 215 | 8.4646 | 8.4657 |
| 21 | m5 | 105 | 4.1350 | 4.1344 | 190 | 7.4803 | 7.4814 | 225 | 8.8583 | 8.8594 |
| 22 | m5 | 110 | 4.3318 | 4.3312 | 200 | 7.8740 | 7.8751 | 240 | 9.4488 | 9.4499 |
| 24 | m5 | 120 | 4.7257 | 4.7250 | 215 | 8.4646 | 8.4657 | 260 | 10.2362 | 10.2375 |
| 26 | m5 | 130 | 5.1194 | 5.1187 | 230 | 9.0551 | 9.0562 | 280 | 11.0236 | 11.0249 |
| 28 | m5 | 140 | 5.5131 | 5.5124 | 250 | 9.8425 | 9.8436 | 300 | 11.8110 | 11.8123 |
| 30 | m5 | 150 | 5.9068 | 5.9061 | 270 | 10.6299 | 10.6312 | 320 | 12.5984 | 12.5998 |
| 32 | m5 | 160 | 6.3005 | 6.2998 | 290 | 11.4173 | 11.4186 | 340 | 13.3858 | 13.3872 |
| 34 | m6 | 170 | 6.6945 | 6.6935 | 310 | 12.2047 | 12.2060 | 360 | 14.1732 | 14.1746 |
| 36 | m6 | 180 | 7.0882 | 7.0872 | 320 | 12.5984 | 12.5998 | 380 | 14.9606 | 14.9620 |
| 38 | m6 | 190 | 7.4821 | 7.4810 | 340 | 13.3858 | 13.3872 | 400 | 15.7480 | 15.7494 |
| 40 | m6 | 200 | 7.8758 | 7.8747 | 360 | 14.1732 | 14.1746 | 420 | 16.5354 | 16.5370 |

Table 15: Cylindrical Ball Bearing Fit Tolerances*

| Basic Number | SHAFT FITS (k5, m5, m6 and n6) | | | | HOUSING FITS (H6) | | | | | |
|---|---|---|---|---|---|---|---|---|---|---|
| | TOLERANCE CLASS | BEARING BORE mm | SHAFT DIAMETER (inches) | | Bearing OD mm | 200 Series Housing Bore (Inches) | | Bearing OD mm | 300 Series Housing Bore (Inches) | |
| | | | Max | Min | | Min. | Max. | | Min. | Max. |
| 00 | m5 | 10 | 0.3942 | 0.3939 | 30 | 1.1811 | 1.1816 | 35 | 1.3780 | 1.3786 |
| 01 | m5 | 12 | 0.4730 | 0.4727 | 32 | 1.2598 | 1.2604 | 37 | 1.4567 | 1.4573 |
| 02 | m5 | 15 | 0.5912 | 0.5909 | 35 | 1.3780 | 1.3786 | 42 | 1.6535 | 1.6541 |
| 03 | m5 | 17 | 0.6699 | 0.6696 | 40 | 1.5748 | 1.5754 | 47 | 1.8504 | 1.8510 |
| 04 | m5 | 20 | 0.7881 | 0.7877 | 47 | 1.8504 | 1.8510 | 52 | 2.0472 | 2.0479 |
| 05 | m5 | 25 | 0.9850 | 0.9846 | 52 | 2.0472 | 2.0479 | 62 | 2.4409 | 2.4416 |
| 06 | m5 | 30 | 1.1818 | 1.1814 | 62 | 2.4409 | 2.4416 | 72 | 2.8346 | 2.8353 |
| 07 | m5 | 35 | 1.3788 | 1.3784 | 72 | 2.8346 | 2.8353 | 80 | 3.1496 | 3.1503 |
| 08 | m5 | 40 | 1.5756 | 1.5752 | 80 | 3.1496 | 3.1503 | 90 | 3.5433 | 3.5442 |
| 09 | m6 | 45 | 1.7727 | 1.7721 | 85 | 3.3465 | 3.3474 | 100 | 3.9370 | 3.9379 |
| 10 | m6 | 50 | 1.9695 | 1.9689 | 90 | 3.5433 | 3.5442 | 110 | 4.3307 | 4.3316 |
| 11 | m6 | 55 | 2.1666 | 2.1658 | 100 | 3.9370 | 3.9379 | 120 | 4.7244 | 4.7253 |
| 12 | m6 | 60 | 2.3634 | 2.3626 | 110 | 4.3307 | 4.3316 | 130 | 5.1181 | 5.1191 |
| 13 | m6 | 65 | 2.5603 | 2.5595 | 120 | 4.7244 | 4.7253 | 140 | 5.5118 | 5.5128 |
| 14 | n6 | 70 | 2.7574 | 2.7567 | 125 | 4.9213 | 4.9223 | 150 | 5.9055 | 5.9065 |
| 15 | n6 | 75 | 2.9543 | 2.9536 | 130 | 5,1181 | 5.1191 | 160 | 6.2992 | 6.3002 |
| 16 | n6 | 80 | 3.1511 | 3.1504 | 140 | 5.5118 | 5.5128 | 170 | 6.6929 | 6.6939 |
| 17 | n6 | 85 | 3.3483 | 3.3474 | 150 | 5.9055 | 5.9065 | 180 | 7.0866 | 7.0876 |
| 18 | n6 | 90 | 3.5451 | 3.5442 | 160 | 6.2992 | 6.3002 | 190 | 7.4803 | 7.4814 |
| 19 | n6 | 95 | 3.7420 | 3.7411 | 170 | 6.6929 | 6,6939 | 200 | 7.8740 | 7.8751 |
| 20 | n6 | 100 | 3.9388 | 3.9379 | 180 | 7.0866 | 7.0876 | 215 | 8.4646 | 8.4657 |
| 21 | n6 | 105 | 4.1357 | 4.1348 | 190 | 7.4803 | 7.4814 | 225 | 8.8583 | 8.8594 |
| 22 | ri6 | 110 | 4.3325 | 4.3316 | 200 | 7.8740 | 7.8751 | 240 | 9.4488 | 9.4499 |
| 24 | n6 | 120 | 4.7262 | 4.7253 | 215 | 8.4646 | 8.4657 | 260 | 10.2362 | 10.2375 |
| 26 | n6 | 130 | 5.1201 | 5.1192 | 230 | 9.0551 | 9.0562 | 280 | 11.0236 | 11.0249 |
| 28 | n6 | 140 | 5.5138 | 5.5129 | 250 | 9.8425 | 9.8436 | 300 | 11.8110 | 11.8123 |
| 30 | p6 | 150 | 5.9082 | 5.9072 | 270 | 10.6299 | 10.6312 | 320 | 12.5984 | 12.5998 |
| 32 | p | 160 | 6.3019 | 6.3009 | 290 | 11.4173 | 11.4186 | 340 | 13.3858 | 13.3872 |
| 34 | p6 | 170 | 6.6956 | 6.6946 | 310 | 12.2047 | 12.2060 | 360 | 14.1732 | 14.1746 |
| 36 | p | 180 | 7.0893 | 7.0883 | 320 | 12.5984 | 12.5998 | 380 | 14.9606 | 14.9620 |
| 38 | p6 | 190 | 7.4834 | 7.4823 | 340 | 13.3858 | 13.3872 | 400 | 15.7480 | 15.7494 |
| 40 | p6 | 200 | 7.8771 | 7.8760 | 360 | 14.1732 | 14.1746 | 420 | 16.5354 | 16.5370 |

***Shaft Rotates—Outer Ring Stationary. Adapted from ABMA Standard 7, Tables 1, 2, 3, and 4.**
**The above Shaft (interference) fits and Housing (clearance) Fits are practical for most standard electric motor applications. Where wider tolerances (housing fits) are permissible, use tolerance class H7 instead of H6.**

**Table 16: High-Potential Test Using Ac - New Windings**

| DESCRIPTION OF MACHINE | EFFECTIVE AC HIGH-POTENTIAL TEST VOLTAGE | |
|---|---|---|
| **AC INDUCTION MACHINES AND NONEXCITED SYNCHRONOUS MACHINES** | **STATOR WINDING** | **ROTOR WINDING** |
| Motors rated 0.5 hp and less, generators rated 373 watts (or equivalent) and less, and for operation on circuits:<br>a) 250 volts or less | 1000 volts | 1000 volts + 2 times the secondary voltage |
| b) Above 250 volts | 1000 volts + 2 times the rated voltage of the machine | |
| Motors rated greater than 0.5 hp, generators rated greater than 373 watts (or equivalent), and for:<br>a) Non-reversing duty | | |
| b) Reversing duty | | 1000 volts + 4 times the secondary voltage |

| **AC SYNCHRONOUS MACHINES WITH SLIP RINGS** | **STATOR WINDING** | **FIELD WINDING** |
|---|---|---|
| **MOTORS** | 1000 volts + 2 times the rated voltage of the motor | **Starting Method 1***<br>10 times the rated excitation voltage but not less than 2500 volts nor more than 5000 volts |
| | | **Starting Method 2***<br>2 times the IR drop across the resistor but not less than 2500 volts |
| **GENERATORS**<br>a) With stator (armature) or field windings rated 35 volts or less | 500 volts | |
| b) With output less than 250 watts and rated voltage 250 volts or less | 1000 volts | |
| c) With rated excitation voltage 500 volts DC or less | 1000 volts + 2 times the rated voltage of the generator | 10 times the rated excitation voltage but not less than 1500 volts |
| d) With rated excitation voltage above 500 volts DC | | 4000 volts + 2 times the rated excitation voltage |

*** Starting Method 1: For a motor to be started with its field short-circuited or closed through an exciting armature.**

**Starting Method 2: For a motor to be started with a resistor in series with the field winding. The IR drop is taken as the product of the resistance and the current that would circulate in the field winding if short-circuited on itself at the specified starting voltage (Reference: NEMA Standards. MG 1, 21.22.3).**

**Table 16: High-Potential Test Using Ac - New Windings—continued**

| DESCRIPTION OF MACHINE | EFFECTIVE AC HIGH-POTENTIAL TEST VOLTAGE | |
|---|---|---|
| **AC BRUSHLESS SYNCHRONOUS MACHINES AND EXCITERS** | **MAIN STATOR WINDING** | **MAIN FIELD WINDING AND EXCITER ARMATURE** |
| Armature (stator) or field windings rated 35 volts or less | 500 volts | |
| With rated output less than 250 watts and 250 volts or less | 1000 volts | |
| With rated main excitation voltage 350 volts DC or less | 1000 volts + 2 times the rated voltage of the machine | 10 times the rated excitation voltage but not less than 1500 volts* |
| With rated main excitation voltage greater than 350 volts DC | | 2800 volts + 2 times the rated excitation voltage* |
| **BRUSH LESS EXCITERS** | **EXCITER STATOR (FIELDS)** | Alternatively, the brushless exciter rotor (armature) shall be permitted to be tested at 1000 volts plus 2 times the rated non rectified alternating current voltage but in no case less than 1500 volts.* |
| a) With exciter field excitation voltage not greater than 350 volts DC | 10 times the rated excitation voltage but not less than 1500 volts | |
| b) With exciter field excitation voltage greater than 350 volts DC | 2800 volts + 2 times the rated excitation voltage | |
| c) With AC-excited stators (fields) | 1000 volts + 2 times the AC-rated voltage of the stator | |

| DC MOTORS AND GENERATORS | FIELD WINDING | ARMATURE WINDING |
|---|---|---|
| With armature or field windings rated 35 volts or less | 500 volts | |
| Motors rated 0.5 hp and less, generators rated less than 250 watts, and for operation on circuits:<br>a) 240 volts or less | 1000 volts | |
| b) Above 240 volts<br>Motors rated greater than 0.5 hp and generators rated 250 watts and larger | 1000 volts + 2 times the rated voltage of the machine | |

| UNIVERSAL MOTORS RATED 250 VOLTS OR LESS | FIELD WINDING | ARMATURE WINDING |
|---|---|---|
| Rated 0.5 hp and less, except motors marked for portable tools | 500 volts | |
| Rated greater than 0.5 hp, and all motors marked for portable tools | 1000 volts + 2 times the rated voltage of the motor | |

**The brushless circuit components (diodes, thyristors, etc.) should be short—circuited (not grounded) during the test. References: NEMA Standards. MG 1, 12.3, 15.48, 20.17, 21 .22.4, 21.22.5, 23.20 and 24.49.**

**Table 17: High-Potential Test Using Dc - New Windings**

| DESCRIPTION OF MACHINE | DC HIGH-POTENTIAL TEST VOLTAGE | |
|---|---|---|
| **AC INDUCTION MACHINES AND NONEXCITED SYNCHRONOUS MACHINES** | **STATOR WINDING** | **ROTOR WINDING** |
| Motors rated 0.5 hp and less, generators rated 373 watts (or equivalent) and less, and for operation on circuits:<br>a) 250 volts or less | 1700 volts | 1700 volts + 3.4 times the secondary voltage |
| b) Above 250 volts | 1700 volts + 3.4 times the rated voltage of the machine | |
| Motors rated greater than 0.5 hp, generators rated greater than 373 watts (or equivalent), and for:<br>a) Non-reversing duty | | |
| b) Reversing duty | | 1700 volts + 6.8 times the secondary voltage |

| AC SYNCHRONOUS MACHINES WITH SLIP RINGS | STATOR WINDING | FIELD WINDING |
|---|---|---|
| **MOTORS** | 1700 volts + 3.4 times the rated voltage of the motor | **Starting Method 1***<br>17 times the rated excitation voltage but not less than 4250 volts nor more than 8500 volts |
| | | **Starting Method 2***<br>3.4 times the IR drop across the resistor but not less than 4250 volts |
| **GENERATORS**<br>a) With stator (armature) or field windings rated 35 volts or less | 850 volts | |
| b) With output less than 250 watts and rated voltage 250 volts or less | 1700 volts | |
| c) With rated excitation voltage 500 volts DC or less | 1700 volts + 3.4 times the rated voltage of the generator | 17 times the rated excitation voltage but not less than 2550 volts |
| d) With rated excitation voltage above 500 volts DC | | 6800 volts + 3.4 times the rated excitation voltage |

**Starting Method 1: For a motor to be started with its field short-circuited or closed through an exciting armature.**
**Starting Method 2: For a motor to be started with a resistor in series with the field winding. The IR drop is taken as the product of the resistance and the current that would circulate in the field winding if short-circuited on itself at the specified starting voltage (Reference: NEMA Standards. MG 1, 21.22.3).**
**Caution: After completion of a DC high-potential test, the winding must be grounded to the frame (or core) until the charge has decayed to zero. (References: IEEE Standards. 4 and 95; and NEMA Standards. MG 1, 3.1.)**

**Table 17: High-Potential Test Using Dc - New Windings—Continued**

| DESCRIPTION OF MACHINE | DC HIGH-POTENTIAL TEST VOLTAGE | |
|---|---|---|
| **AC BRUSHLESS SYNCHRONOUS MACHINES AND EXCITERS** | **MAIN STATOR WINDING** | **MAIN FIELD WINDING AND EXCITER ARMATURE** |
| Armature (stator) or field windings rated 35 volts or less | 850 volts | |
| With rated output less than 250 watts and 250 volts or less | 1700 volts | |
| With rated main excitation voltage 350 volts DC or less | 1700 volts + 3.4 times the rated voltage of the machine | 17 times the rated excitation voltage but not less than 2550 volts* |
| With rated main excitation voltage greater than 350 volts DC | | 4750 volts + 3.4 times the rated excitation voltage |
| **BRUSH LESS EXCITERS** | **EXCITER STATOR (FIELDS)** | Alternatively, the brushless exciter rotor (armature) shall be permitted to be tested at 1700 volts plus 3.4 times the rated non-rectified alternating current voltage but in no case less than 2550 volts. |
| a) With exciter field excitation voltage not greater than 350 volts DC | 17 times the rated excitation voltage but not less than 2550 volts | |
| b) With exciter field excitation voltage greater than 350 volts DC | 4750 volts + 3.4 times the rated excitation voltage | |
| c) With AC-excited stators (fields) | 1700 volts + 3.4 times the AC-rated voltage of the stator | |

| DC MOTORS AND GENERATORS | FIELD WINDING | ARMATURE WINDING |
|---|---|---|
| With armature or field windings rated 35 volts or less | 850 volts | |
| Motors rated 0.5 hp and less, generators rated less than 250 watts, and for operation on circuits:<br>a) 240 volts or less | 1700 volts | |
| b) Above 240 volts | 1700 volts + 3.4 times the rated voltage of the motor | |
| Motors rated greater than 0.5 hp and generators rated250 watts and larger | | |

| UNIVERSAL MOTORS RATED 250 VOLTS OR LESS | FIELD WINDING | ARMATURE WINDING |
|---|---|---|
| Rated 0.5 hp and less, except motors marked for portable tools | 1700 volts | |
| Rated greater than 0.5 hp, and all motors marked for portable tools | 1700 volts + 3.4 times the rated voltage of the motor | |

**The brushless circuit components (diodes, thyristors, etc.) should be short-circuited (not grounded) during the test**
**References: NEMA Standards. MG 1, 12.3, 15.48, 20.17, 21.22.4, 21.22.5, 23.20 and 24.49. Caution: After**

**completion of a DC high-potential test, the winding must be grounded to the frame (or core) until the charge has decayed to zero. (References: IEEE Standards. 4 and 95; and NEMA Standards. MG 1, 3.1.)**

**Table 18: High-Potential Test Using Ac - New Accessories**

| Accessory* | Rated Voltage | Effective AC High-Potential Test Voltage |
|---|---|---|
| Thermostats | 600 volts | 1000 volts + 2 times the rated voltage of the accessory or equal to the high-potential test voltage of the machine, whichever is lower. |
| Thermocouples<br>Thermistors<br>Resistance temperature detectors (RTDs) | 50 volts | |
| Space heaters | All | |
| * Accessories not connected in the line circuit | | |

**Reference: NEMA Standards. MG 1, 3.1.8.**

**Table 19: High-Potential Test Using Dc - New Accessories**

| Accessory* | Rated Voltage | Effective AC High-Potential Test Voltage |
|---|---|---|
| Thermostats | 600 volts | 1700 volts + 3.4 times the rated voltage of the accessory or equal to the high-potential test voltage of the machine, whichever is lower. |
| Thermocouples<br>Thermistors<br>Resistance temperature detectors (RTDs) | 50 volts | |
| Space heaters | All | |
| * Accessories not connected in the line circuit ** Unless otherwise stated. | | |

**Reference: NEMA Standards. MG 1, 3.1.8.**

**Table 20: Rotor Critical Speed**

| Rotor Design | First Actual Critical Speed Location |
|---|---|
| Rigid Shaft | At Least 25% Above Rated Motor Speed |
| Flexible Shaft | Maximum of 85% of Motor Speed |

**Table 21: Maximum Allowable Vibration Levels for Fractional and Integral Horsepower AC/DC Motors**

| Velocity Line-Amplitude Band Limits | | |
|---|---|---|
| Band | Frequency Range (CPM) | Inch/Sec-Peak |
| 1 | 0.3 x RPM<br>0.8 x RPM | 0.04 |
| 2 | 0.8 x RPM<br>1.2 x RPM | 0.075 |
| 3 | 1.2 x RPM<br>3.5 x RPM | 0.04 |
| 4 | 3.5 x RPM<br>8.5 x RPM | 0.03 |
| 5 | 8.5 x RPM<br>60,000 CPM | 0.03 |
| 6 | 60,000 CPM<br>$F_{max}$ * | 0.03 |
| | | |
| Acceleration Band-Limited Overall Amplitude Limits | | |
| Band | Frequency Range (CPM) | g's Peak |
| 1 | 0.3 x RPM - $F_{max}$ * | 0.5 |

**$F_{max}$ is defined as: 180,000 CPM for motors with synchronous speed ≤ 1800 RPM**
**360,000 CPM for motors with synchronous speed ≤ 3600 RPM**

**Table 22: Maximum Allowable Vibration Levels for Electric Motors, Large Apparatus AC/DC Motors**

| | | Band-Limited Overall Amplitude Limits | |
|---|---|---|---|
| Reference | Speed (RPM) | Displacement (Mils Peak-Peak) | Velocity (Inch/Sec-Peak) |
| NEMA STD. MG 1, Section III | 3000 & Above | 1.0 | 0.150 |
| 20.53 Induction Motors | 1500 - 2999 | 2.0 | 0.150 |
| 21.54 Synchronous Motors | 1000 - 1499 | 2.5 | 0.150 |
| 23.52 DC Motors | 999 & Below | 3.0 | 0.150 |

WOODLAND PULP LLC

PLC PROGRAMMING

SPECIFICATIONS

SECTION

# PLC PROGRAMMING STANDARDS

**Goal**

To unify the way PLC systems are programmed and maintained throughout the mill, the following standards have been developed.

**Motor Ladder Logic**

Motor logic should follow the standard programming layout and format:

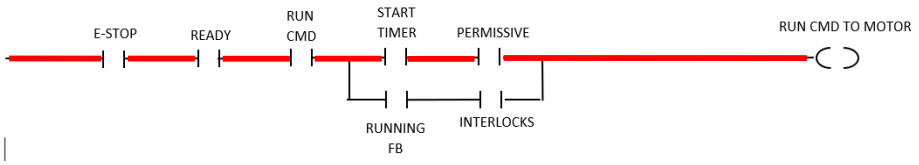


The following table describes the function of each of the above bits

| Label | Function |
|---|---|
| **E-STOP** | Indication that an E-STOP has not been engaged |
| **READY** | Indication that there is power at the starter |
| **STOP** | Operator command to stop from DCS |
| **START TIMER** | 5-second timer to start the motor |
| **PERMISSIVE** | Any condition which is required to start the motor but is not necessary for the motor to continue running (these are uncommon) |
| **RUN FB** | The contact which confirms that the motor is running (M-coil confirm) |
| **INTERLOCKS** | Any condition which is necessary for the motor to be running |
| **RUN CMD TO MOTOR** | The output connected to the motor to start it |

No interlocks are to be present on the section of the line shown in RED.

**Motor PLC Labels**

All PLC labels used for motors will be the standard tag name used for a motor

UUM###

Where UU = Unit where the motor is located

And ### = is the motor number

For example, the motor for the main clarifier rake will be 87M201

The full tag name used for the PLC label will be the motor tag starting with an underscore since CLX tags can't start with a number (_87M201) plus an additional extension. The table details the extensions used for each function. "xx" is used to denote a variable which can be determined on a case by case basis

| Label Extension | Function | Example using _87M201 |
|---|---|---|
| **DCS_START_CMD** | DCS Start | _87M201_DCS_START_CMD |
| **DCS_STOP_CMD** | DCS Stop | _87M201_DCS_STOP_CMD |
| **LOC_START_CMD** | Local Start | _87M201_LOC_START_CMD |
| **LOC_STOP_CMD** | Local Stop | _87M201_LOC_STOP_CMD |
| **LOC_JOG_CMD** | Local Jog | _87M201_LOC_JOG_CMD |
| **MTR_SW_REM** | Local Switch in Remote | _87M201_ MTR_SW_REM |
| **MTR_SW_LOC** | Local Switch in Local | _87M201_ MTR_SW_LOC |
| **MTR_SW_OFF** | Local Switch in Off | _87M201_ MTR_SW_OFF |
| **MTR_SW_ON** | Local Switch in On | _87M201_MTR_SW_ON |
| **MTR_SW_AUTO** | Local Switch in Auto | _87M201_MTR_SW_AUTO |
| **MTR_RUN_CMD** | Run Output | _87M201_MTR_RUN_CMD |
| **MTR_RDY** | Ready | _87M201_MTR_RDY |
| **MTR_RUNNING_FB** | Running Feedback | _87M201_MTR_RUNNING_FB |
| **MTR_ESTOP** | E-Stop | _87M201_MTR_ESTOP |
| **MTR_VIB** | Motor Vibration | _87M201_MTR_VIB |
| **DRV_FAULT** | Drive Fault | _87M201_DRV_FAULT |
| **START_CMD_TMR** | Start Timer | _87M201_START_CMD_TMR |

**Commented [JH1]:** Change nomenclature to "Run" and "Running" not "Stop"

**Commented [JH2]:** Need to clarify the interlock labeling and location in the logic.

| | | |
|---|---|---|
| **STOP_CMD_TMR** | Stop timer | _87M201_STOP_CMD_TMR |
| **MTR_FOxx_xxx** | First Out | _87M201_xxx_FOxx_xxx |
| **MTR_ILK_xxxx** | Interlocks | _87M201_MTR_ILKxx |

Due to labelling restrictions in Logic Manager systems, this above does not apply to those applications.

**Solenoid Valve PLC Labels**

PLC label standards for solenoid valves will follow the mill standard for the labeling of valves.

**Standard LM to Control Logix**

| LM | Control Logix |
|---|---|
| **DCS Start** | DCS_Start_CMD |
| **DCS Stop** | DCS_Stop_CMD |
| **Local Start** | Loc_Start_CMD |
| **Local Stop** | Loc_Stop_CMD |
| **Run Output** | MTR_Run_CMD |
| **Ready** | MTR_RDY |
| **Running Feedback** | MTR_RUNNING_FB |
| **Start Timer** | Start_CMD_TMR |
| **Stop timer** | Stop_CMD_TMR |
| **First Out** | xxx_FOxx_xxx |
| **Interlocks** | MTR_ILKxx |

**Standard Motor Ladder Logix**

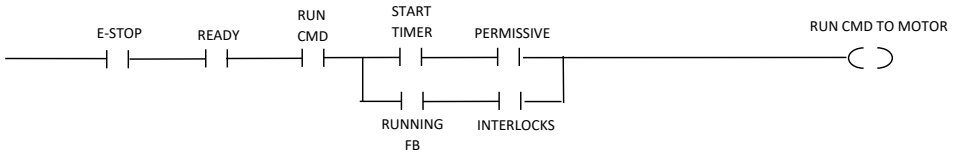


**Solenoid Valves: ISA DOC**

## Part 1 - GENERAL

1.01 ***DESCRIPTION***

A. This specification details a complete Variable Frequency Drive (VFD) used to control the speed and torque of NEMA design B induction motors.

B. The VFD manufacturer shall supply the VFD and all necessary controls as herein specified.

C. The VFD shall be manufactured by a company with at least twenty (10) years' experience in the production of this type of equipment.

D. All VFD's installed on a project shall be Allen Bradley unless otherwise specified by Woodland Pulp E&I Management.

E. It is required that the VFD manufacturer have the following resources available:
   1. Sales engineers and applications engineers for VFD products, with expertise in machinery applications and controls.
   2. A network of distributors with ready access to inventory
   3. An independent service organization
   4. Global availability and technical support

1.02 ***QUALITY ASSURANCE***

A. The VFD manufacturing facility shall be ISO 9001 and ISO 14001 certified.

B. All printed circuit boards shall be completely tested before being assembled into the complete VFD. The VFD shall be subjected to a functional test and load test. The load test shall be at full rated load, or cycled load. A testing results summary shall be available upon request.

C. The VFD manufacturer shall have an analysis laboratory to evaluate the failure of any component.

1.03 ***QUALIFICATIONS***

A. The VFD shall meet the following specifications

   1. ANSI/UL 61800-5-1:2015 - Underwriter's Laboratory. The VFD and any options shall be UL listed as a complete assembly and carry the UL mark. VFD's certified to UL508C, the standard that preceded UL 61800-5-1, are not acceptable. VFD's marked as UL recognized components are not acceptable.
   2. CSA C22.2 No. 274-13 - Canadian Standards Association. The VFD shall be C-UL listed and carry the appropriate mark.
   3. The VFD shall comply with the following European Union's CE directives. The VFD shall carry the CE mark.
      a. EN ISO 13849-1:2015 Safety of machinery
         Safety related parts of the control systems – Part 1: general principles for design
      b. EN ISO 13849-2:2012 Safety of machinery
         Safety-related parts of the control systems – Part 2: Validation
      c. EN 60204-1:2006 + A1:2009 + AC:2010
         Safety of machinery. Electrical equipment of machines.
         Part 1: General requirements.

d. EN 62061:2005 +AC:2010 + A1:2013 + A2:2015
   Safety of machinery – Functional safety of safety-related electrical, electronic, and programmable electronic control systems
e. EN 61800-3:2004 + A1:2012 & IEC 61800-3:2004 + A1:2011
   Adjustable speed electrical power drive systems.
   Part 3: EMC requirements and specific test methods
f. IEC/EN 61800-5-1:2007
   Adjustable speed electrical power drive systems – Part 5-1: Safety requirements – Electrical, thermal and energy

B. The VFD shall have the following certifications:
   1. RCM – The VFD shall conform to the Australian and New Zealand RCM standard for EMC, telecommunications, and electrical safety. This replaces the C-Tick marking, which is no longer acceptable.
   2. EAC – The VFD shall conform to the Eurasian Conformity EAC standard to indicate the VFD meets the requirements for the Eurasian Customs Union and meet all requirements of the corresponding technical regulations and have passed all conformity assessment procedures. This mark replaces the GOST and TR marks which are no longer acceptable.
   3. RoHS – The VFD shall be in compliance with the European RoHS directive that restricts the use of certain hazardous substances in electric and electronic equipment.
   4. WEEE – The VFD shall be in compliance with the European WEEE directive that defines the regulated disposal and recycling of electric and electronic equipment

C. Acceptable manufacturers
   1. VFD manufacturer must design, manufacture, ensure quality, and manage the life cycle of all products offered on this project.
   2. VFD vendors that are designed and/or manufactured by a third party and “brand labeled” are not acceptable and shall not be allowed.
   3. Requests for the acceptance of alternate manufacturer’s VFD’s shall be submitted for approval in writing to the Woodland Pulp LLC E/I management at least 10 working days prior to bid. Approval does not relieve supplier of specification requirements.

## 1.04 ***SUBMITTALS***

A. Submittals shall be available that include the following information:
   1. Outline Dimensions and Weight.
   2. Customer connection and power wiring diagrams.
   3. Complete technical product description including a complete list of options provided.

## Part 2 - DESIGN

2.01 ***DESCRIPTION***

A. The VFD shall be a solid state AC to AC inverter controlled device utilizing the most current isolated gate bipolar transistor (IGBT) technology.

B. The VFD shall utilize advanced motor control algorithms and three phase current measurement to achieve precise motor control capable of developing high torque at low speed. In vector mode in the VFD shall have the ability to provide both open loop and closed loop speed control as well as torque control. The VFD must also provide a scalar mode of operation for V/Hz control.

C. The VFD shall have the ability to operate AC induction motors or permanent magnet synchronous AC motors.

2.02 ***RATINGS***

A. The voltage designations for the VFD series shall use a nominal rating that denotes an operational range plus a tolerance: (examples below)
   1. 230V: 200 to 240V, +10% / -15%
   2. 480V: 380 to 480V, +10% / -15%

B. The VFD shall have the following environmental operating characteristics:
   1. Continuous, full rated operation from -10 to 50° C (14 to 122° F) ambient temperature. VFD's with internal fans can operate up to 60° C (142° F) with derating.
   2. VFD's limited to a maximum ambient of 40° C are not acceptable.
   3. Relative humidity: 5 to 95% no condensation allowed

C. The VFD shall be offered from 0.5 HP to 400 HP in similar construction and operation, using the same technology.

D. The VFD shall be rated to operate from input power from 48Hz to 63Hz.

E. The minimum FLA rating shall meet or exceed the values in the NEC/UL table 430.250 for 4-pole motors.

F. The Light Duty overload current capacity shall be 110% of rated current for one (1) minute and 150% for 3 seconds.

G. The Heavy Duty overload current capacity shall be 150% of rated current for one (1) minute out of five (5) minutes.

H. The VFD efficiency shall be 98% or better of the full rated capability of the VFD at full speed and load.

I. Must have Line reactors (Integrated or external) with new drives installed unless an isolating ground transformer exists for the source of power being used.

2.03 ***CONSTRUCTION***

A. All models shall provide a complete, ready-to-install solution.

B. The most current and most efficient IGBT power technology shall be used to produce a PWM output waveform. This technology shall be used for all power and voltage ranges offered by the manufacturer. Other VFD technologies are not acceptable.

C. The VFD shall offer microprocessor based control logic that is isolated from power circuitry.

D. The VFD shall use the same main control board for all ratings.

E. Control connections shall remain consistent for all power ratings.

F. IP20 enclosure shall be standard with optional UL Type 1 enclosure kits available. Enclosures with NEMA ratings are not acceptable.

G. The VFD shall be wall or DIN rail mountable without the addition of any mounting kits.

H. The VFD specified here shall have a HIM whether integrated or optional.

I. VFD's with frame designations R1-R4 shall have a cooling fan that is designed for easy replacement. The product shall be designed so that removing the VFD from the wall or the removal of circuit boards is not required for replacement of the cooling fan. The VFD cooling fan shall operate only when required.

J. All circuit boards shall have conformal coating.

K. An internal power supply rated for +24 VDC +/-10%, max. 200 mA shall be standard with the VFD.

L. Standard VFD's shall have a C4 or C3 level of electromagnetic compatibility for EU compliance. Devices complying with a C3 level will include a disconnectable internal EMC filter to protect the VFD in corner-grounded power networks. A variant of the VFD with a C2 level filter shall be available as a special order.

M. Packaging shall be made from sustainable/recyclable materials, principally corrugated cardboard, and molded pulp. Expanded polystyrene packaging material is not acceptable.

N. Must order the option of braking chopper capable of 100% continuous duty operation shall be standard in all frame sizes and for all power ratings.

O. The VFD product line shall have two mounting locations for option modules:
   1. Front mounting location for I/O or serial communications modules. When using serial communications modules, the I/O shall be expandable using an additional module co-mounted with the Fieldbus module.
   2. Side mounting location shall be available for either expanding the number of relay outputs, connecting an external 24V control power source, or adding an HTL/TTL pulse encoder interface.

   To facilitate panel mounting, the dimensions of the product line shall have minimal variation as the VFD's increase in power rating. The height and depth of the product line shall remain the same with only the width of the VFD changing as the power rating increases.

P. Adapter modules and I/O expansion modules shall be mounted by the VFD manufacturer and shall also be available as field installable kits as an alternative. All optional features shall carry all of the necessary certifications as described in Section 1.03. Field installed kits shall not affect the VFD's certification.

2.04 ***PROTECTIVE FEATURES***

A. The VFD shall display a fault code for each programmed warning and fault protection function. The three (3) active and most recent fault messages and times shall be stored in the VFD's fault history.

B. The VFD shall include internal MOV's for phase to phase and phase to ground line voltage transient protection.

C. Output short circuit and ground fault protection rated for 100,000 amps without relying on line fuses shall be provided per UL61800-5-1.

D. Motor phase loss protection shall be provided.

~~E. The VFD shall be protected against cross connection. If input power is connected to the motor terminals, the VFD shall trip on a cross connection fault.????~~

F. The VFD shall provide electronic motor overload protection qualified per UL61800-5-1.

G. The VFD shall protect itself against an open fuse, loose input power connection, or input supply imbalance by displaying an input phase loss fault.

H. A power loss ride through feature shall allow the VFD to remain fully operational after losing power as long as kinetic energy can be recovered from the rotating mass of the motor/load and regenerated back to the DC bus.

I. Stall protection shall be programmable to provide a warning or to stop the VFD after the motor has operated above a programmed torque level for a programmed time limit.

J. Underload protection shall be programmable to provide a warning or stop the VFD after the motor has operated below a selected underload curve for a programmed time limit.

K. Over-temperature protection shall provide a warning if the power module temperature is less than 5°C below the over-temperature trip level.

L. Terminals shall be provided for connecting a motor thermistor (PTC type) to the VFD's protective monitoring circuitry. An input shall also be programmable to monitor an external relay or switch contact.

M. The UL listing for the VFD shall allow for the use of either for fuses (100kAIC) or Type E resettable devices (65kAIC) for short circuit protection.

N. The VFD shall use direct measurement of all three output phases for enhanced motor control and phase-to-ground detection. VFD's using DC bus calculation to estimate output power are not acceptable.

O. Must include programming options to stop (or fault) on slow or no feedback from tach or encoder to prevent runaway with motor.

2.05 ***CONTROL INPUTS AND OUTPUTS***

A. Digital inputs
   1. Standard VFD variants: Four (4) digital inputs & two (2) convertible digital inputs/outputs.
   2. Configured VFD variants: Two (2) digital inputs
   3. Configured VFD variants with I/O expansion module: An additional three (3) digital inputs for a total of five (5)
   4. Digital inputs shall also be configurable as frequency inputs.
   5. On/off delay shall also be an optional mode of operation for digital inputs
   6. The digital inputs shall be independently programmable with at least 30 function selections (ready run, enabled, started, reverse, warning, fault, etc.).
   7. Inputs shall be designed for use with either the VFD's internal 24 VDC supply or a customer supplied external 24 VDC supply.
   8. Typical 120VAC should also be available for retrofits.

B. Relay outputs
   1. One (1) form C relay contact outputs shall be provided with the base VFD. An option module shall be available for an additional four (4) relay outputs.
   2. All outputs shall be independently programmable to activate with at least 30 function selections including.
      a. Operating conditions such as drive ready, drive running, reversed and at set speed, overcurrent, overvoltage, drive temp, motor temp, etc.
      b. General warning and fault conditions
      c. Adjustable supervision limit indications based on programmed values of operating speed, speed reference, current, torque, and PID feedback.
      d. Relay contacts shall be rated to switch 2 Amps at 30 VDC or 250 VAC.

C. Analog Inputs
   1. Standard VFD variants: Two (2) analog inputs shall be provided
   2. Configured VFD variants with I/O expansion module: One (1) analog input
   3. Must be selectable for either a current or a voltage input.
   4. Inputs shall be independently programmable to provide signals including speed / frequency reference, torque reference or set point, PID set point, or PID feedback / actual.
   5. Analog input signal processing functions shall include scaling adjustments, adjustable filtering, and signal inversion.
   6. If the input reference is lost, the VFD shall be programmable to signal this condition via a keypad warning, relay output and/or over the serial communications bus. The following options shall be available:
      a. Stopping and displaying a fault
      b. Running at a programmable preset speed
      c. Hold the VFD speed based on the last good reference received
      d. Cause a warning to be issued, as selected by the user.

D. Analog Outputs
   1. Standard VFD variants: At least one (1) analog output shall be provided
   2. Output shall be independently programmable for 0-20 mA or 0-10VDC output to provide signals proportional to output function selections including output speed, process PID signal, frequency, torque, voltage, current or power.

E. Digital Outputs
   1. Standard VFD variants: Two (2) convertible digital inputs/outputs

2. Configured VFD variants with I/O expansion module: One (1) digital output
3. The digital outputs shall be independently programmable with at least 30 function selections (ready run, enabled, started, reverse, warning, fault, etc.)
4. Digital inputs shall also be configurable as frequency inputs.
5. Inputs shall be designed for use with either the VFD's internal 24 VDC supply or a customer supplied external 24 VDC supply.

F. Safety Inputs
1. The VFD shall have a Safe Torque Off (STO) circuit with terminals integrated in the VFD as standard.
2. The STO function shall meet a Safety Integrity Level (SIL) 3 with a Performance Level (PL) e and be in compliance with EN/IEC61800-5-2: IEC61508 ed2: SIL 3, IEC 61511: SIL 3, IEC 62061: SIL CL 3, EN ISO 13849-1: PL e

## 2.06 ***SERIAL COMMUNICATIONS***

A. The VFD shall be capable of communicating with other VFDs or controllers via a serial communications link. A variety of communications adapter modules for the typical overriding control systems shall be available.

B. Adapter modules shall be available for a wide selection of protocols including but not limited to:
1. Modbus RTU
2. Ethernet/IP™
3. ModBus TCP
4. DeviceNet™
5. EtherCAT®
6. Ethernet POWERLINK

C. Adapter modules shall mount directly to the VFD control board to minimize interference and provide maximum throughput.

D. At the first power-up, fieldbus adapter modules shall preconfigure parameter settings related to their functionality.

E. I/O shall be accessible through the serial communications adapter. Serial communication capabilities shall include, but not be limited to:
1. Run-Stop control
2. Hand-Off-Auto Control
3. Speed Adjustment
4. PID (proportional/integral/derivative) control adjustments
5. Current Limit
6. Accel/Decel time adjustments

F. The VFD shall have the capability of allowing the overriding controller to monitor feedback such as: process variable feedback, output speed/frequency, current (in amps), % torque, power (kW), kilowatt hours (resettable), operating hours (resettable), relay outputs, and diagnostic warning and fault information.

G. A connection shall also be provided for personal computer interface. Software shall be available for VFD setup, diagnostic analysis, monitoring and control. The software shall provide real time graphical displays of VFD performance.

2.07 ***CONTROL FUNCTIONS AND ADJUSTMENTS***

A. Output frequency shall be adjustable between 0Hz and 400Hz. (Over 400Hz is special order) Operation above motor nameplate shall require programming changes to prevent inadvertent high-speed operation.

B. Stop mode selections shall include coast to stop and ramp to stop.

C. It shall be possible to enter the motor data manually or perform an ID run using built-in functionality to provide an enhanced motor model. It shall be possible to select different ID run formats based on time and accuracy; with the motor coupled or uncoupled; standing still or spinning. The ID run will be performed automatically in vector mode at the first start-up. An ID run can be manually selected for scalar control.

D. The VFD shall be capable of controlling deceleration of a load without generating an overvoltage fault caused by excessive regenerated energy. Overvoltage control on deceleration shall extend the ramp time beyond the programmed value to keep the amount of regenerated energy below the point that causes overvoltage trip.

E. The VFD shall be capable of starting into a rotating motor with or without existing magnetic flux on the motor regardless of the motor direction (flying start). From the time the start signal is given to the VFD to the time the VFD has control of the motor shall not exceed two (2) seconds. Once the VFD has control of the motor it shall than accelerate or decelerate the motor to the active reference speed without tripping or faulting or causing component damage to the VFD. The VFD shall also be capable of flux braking at start to stop a reverse spinning motor prior to ramp.

F. The VFD shall have the ability to automatically restart after an overcurrent, overvoltage, undervoltage, or loss of input signal protective trip. The number of restart attempts, trial time, and time between reset attempts shall be programmable.

G. Control functions shall include two (2) sets of acceleration and deceleration ramp time adjustments with linear and an s-curve ramp time selection.

H. Speed control functions shall include:
   1. Adjustable min/max speed limits.
   2. Selection of up to 7 preset speed settings for external speed control.
   3. Three (3) programmable critical frequency lockout ranges shall be provided to prevent the VFD from operating the load continuously at an unstable speed.
   4. An integrated PID controller with two different parameter sets for process control with one parameter set in use at a time. The PID set point shall be adjustable from the VFD keypad, analog inputs, or over the communications bus. The process reference signal shall be selectable to include 4-20mA, 0-10V, or serial communications. The controller shall allow for alternation between the two parameter sets based on manual control, timed function or the monitoring of other supervision inputs.

I. Functions shall include energy optimization for optimizing efficiency and limit the audible noise produced by the motor by providing the optimum magnetic flux for any given speed / load operating point.

J. The VFD shall be capable of sensing a loss of load (broken belt / broken coupling) and signal the loss of load condition. The VFD shall be programmable to signal this condition via a warning, relay output and/or over the serial communications bus. Relay output shall include programmable time delays that shall allow for VFD acceleration from zero speed without signaling a false underload condition.

K. The VFD shall offer software to select the VFDs action in the event of a loss of the primary speed reference.

L. The VFD shall have the capability of monitoring signals and determining if a warning or fault should be generated when signal has gone beyond upper and lower limits. A total of six (6) supervision functions can be determined with three (3) of them active.

M. The VFD shall utilize pre-programmed Application Macro's specifically designed to facilitate start-up. The macros shall provide one command to preprogram all parameters and customer interfaces for a particular application to reduce programming time.

N. The VFD shall have programmable "Sleep" and "Wake up" functions to allow the VFD to be started and stopped from the level of a process feedback signal.

O. The VFD shall have the ability to be connected to a common DC bus system where the VFD can be powered and regenerate onto a common DC bus.

P. The VFD shall have the ability for customized operation using a PC-based tool to create customized programs. A graphical user interface shall be used to build programs using function blocks containing arithmetic and logical functions. Physical inputs, VFD status information, actual values, constants, and parameters can be used as the input for the program. The output of the program can be used as a start signal, external event or reference, or connected to the VFD outputs. An adaptive program can contain base program and sequence programming elements.

Q. The VFD shall include a specific parameter group for mechanical brake control. This feature shall use state machine logic for controlling the function of a holding brake using internal and external signals.

R. The VFD shall include a specific Limit to Limit Control function that restricts the forward and reverse movement of a load inside two extreme points. The function supports the monitoring of two sensors at both ends of the movement range: one for the slow down point and the other for the stop point. The sensors or limit switches are provided by the installer.

S. The VFD shall be equipped for resistor braking as standard. (When ordering a VFD this option will be an added cost) A braking chopper, software, and DC connections must be included with all frame sizes and power ratings. Braking resistor sizing tables shall be available from the vendor and available to order with the VFD.

T. The VFD shall include motor magnetization control for different phases of motor start/rotation/stop: pre-magnetization, DC hold, post-magnetization, and pre-heating (motor heating). (Option due to price)

U. The VFD shall be capable of different operating modes using speed, torque, or frequency references.

V. The VFD shall include auto phasing, an automatic measurement routine to determine the angular position of the magnetic flux of a permanent magnet synchronous motor or the magnetic axis of a synchronous reluctance motor. This function shall be operable in an open-loop format or with an encoder reference.

W. A suite of control programs for crane applications shall be standard software on the VFD product line. (An optional feature. Plus, a technician needs special certification to program and use this feature)

X. The VFD shall include energy-saving calculators that can display: (All of these are special order when ordering a VFD)
   1. Energy-savings in GWh, MW, or kW
   2. Monetary savings
   3. CO2 reduction in tons or kilotons
   4. Peak values – hourly, daily, monthly, or lifetime

Y. The VFD shall include a switching frequency control circuit that allows setting a reference frequency and a minimum frequency. The control circuit will maintain the highest frequency allowed by actual temperature of the VFD. As the VFD temperature increases, the control circuit will automatically reduce the frequency to the minimum setting. If heating continues the control reduces output current to compensate.

Z. The VFD shall include pass code protection against unauthorized parameter changes.

## Part 3 - OPTIONS

### 3.01 *OPTION MODULES, CONNECTION INTERFACES, & KITS*

A. UL Type 1 enclosure kits shall be available. Enclosure kits with NEMA ratings are not acceptable.

B. Mounting kits for attaching remote control panels on enclosure or cabinet doors shall be available.

C. A cold configuration tool shall be available for programming an un-powered VFD

D. An I/O + Modbus RTU connection interface shall be available as an assembled component for the standard variant of the VFD and as a separate item. The interface module shall include:

1. RS-485 connection terminals for Modbus RTU with
2. Termination and bias selection jumpers
3. Two (2) digital inputs
4. Two (2) configurable digital inputs/outputs
5. Two (2) analog inputs
6. One (1) analog output

E. Fieldbus adapter modules as assembled components for the configured variant of the VFD and as separate items. Adapter modules shall be available for the following protocols:
1. Modbus RTU
2. Ethernet/IP™
3. ModBus TCP
4. DeviceNet™
5. PROFIBUS
6. PROFINET
7. CANOpen®
8. EtherCAT®
9. Ethernet POWERLINK

F. An I/O expansion module shall be available for use with the fieldbus adapters. The module shall include the following:
1. Three (3) digital inputs
2. One (1) digital output
3. 10V power connection
4. One (1) analog input

G. Expansion modules to increase the functionality of the VFD shall be available
1. Relay module to add four (4) relay outputs
2. Auxiliary power module to enable the use of external 24V power to keep the control panel powered if power to the VFD is disconnected
3. Pulse encoder interface module to enable closed-loop speed control using feedback signals from HTL or TTL type pulse encoders for closed loop control.

H. The VFD shall be compatible with a personal computer based tool used for commissioning and maintenance of all ABB All-Compatible VFD's. Connection shall be possible using the panel port connector on the top of the VFD or thru a USB connection on the remote operator interface.

I. A USB to RJ45 cable shall be available for connecting a personal computer directly to the VFD thru the panel port connector.

J. Braking resistors, input reactors, and output filters shall be pre-selected in the vendor's sales literature and available to order with the VFD.

3.02 ***REMOTE OPERATOR INTERFACE***

A. The VFD shall interface with the external control panel that is common to the manufacturer's other all-compatible product lines regardless of HP rating or type.

B. The device shall include a four- (4) line back-lit alphanumeric LCD display that is 240x160 pixels. Configurable displays showing, bar graph and meter. Keypad shall have 10 soft keys for Run/Stop, Local/Remote, Increase/Decrease, Reset, Menu navigation and Parameter select/edit.

C. The control panel shall allow for uploading and downloading of parameter settings as an aid for start-up of multiple VFDs.

D. When transferred between product lines, the control panel must automatically establish contact with the VFD and adjust communications without user input.

E. The display of the control panel shall have the following features:

1. All parameter names, fault messages, warnings and other information shall be displayed in complete American English words or standard American English abbreviations to allow the user to understand what is being displayed without the use of a manual or cross-reference table.
2. Additional languages including French, Spanish, Portuguese, German, Italian, Dutch, Danish, Swedish, Finnish, Russian, Turkish and Chinese shall be selectable.
3. During normal operation, one (1) line of the control panel shall display the speed reference and run/stop forward/reverse and local/remote status. The remaining three (3) lines of the display shall be programmable to display the values of any three (3) operating parameters. The selection shall include at least the following values:
    a. Speed/torque in percent (%), RPM or user-scaled units
    b. Output frequency, voltage, current and torque
    c. Power and kilowatt hours
    d. Heatsink temperature and DC bus voltage
    e. Status of discrete inputs and outputs
    f. Values of analog input and output signals
    g. Values of PID controller reference, feedback, and error signals

F. The control panel shall have a face mounted USB connector for connecting the control panel to a PC and transferring data.

G. The control panel shall be used for either local or remote control, for setting all parameters, and for stepping through the displays and menus.

H. The remote control panel shall include a built-in time real time clock used to date and time stamp faults and record operating parameters at the time of fault.

1. The clock shall have a battery backup with 10 years minimum life span. Capacitor back-up is not acceptable.
2. If the battery fails, the VFD shall automatically revert to hours of operation since initial power up.
3. The clock shall also be programmable to control start/stop functions, constant speeds, PID parameter sets and output relays.
4. There shall be twelve (12) separate, independent timer functions with the capability for defining schedules based on all seven (7) days of the week, seasons, holidays, workdays, and exceptions.

I. Variations of the external control panel shall include the standard industrial panel, a version with Bluetooth connectivity, a basic panel with the same functionality as the integrated panel, and limited functionality panels (standard vs. industrial).

J. A copy function to upload and store parameter settings from a VFD and download stored parameter settings to the same VFD or to another VFD shall exist.

K. An intelligent start-up assistant shall be provided as standard. The Start-up routine shall guide the user through all necessary adjustments to optimize operation.
   1. The Start-Up routine shall include “plug and produce” operation, which automatically recognizes the addition of options and fieldbus adapters and provides the necessary adjustment assistance.
   2. The Start-Up routine shall prompt the user for Motor Nameplate Data including power, speed, voltage, frequency and current.
   3. An auto-tune function shall identify the optimal motor tuning parameters for typical applications.
   4. An auto-tune function shall also be available to tune the PID speed regulator loop. Manual adjustments shall also be allowed.
   5. The Start-up routine shall interface with the setup macros that are included in the VFD software.

## Part 4 - EXECUTION

### 4.01 *INSTALLATION*

A. Installation shall be the responsibility of the electrical contractor. The contractor shall install the VFD in accordance with the recommendations of the VFD manufacturer as outlined in the VFD installation manual.

B. The VFD manufacturer shall provide adequate drawings and instruction material to facilitate installation of the VFD by qualified electrical and mechanical personnel employed by others.

### 4.02 *PRODUCT SUPPORT*

A. Factory trained application engineers and service personnel that are thoroughly familiar with the VFD products offered shall be locally available at both the specifying and installation locations.

B. A 24/365 technical support line shall be available on a toll-free-line.

### 4.03 *WARRANTY*

A. Standard Warranty shall be 12 months from the date of installation, not to exceed 24 months from the date of shipment. The warranty shall include replacement with the return of the failed VFD.

B. There shall be 24/7/365 support available on a toll-free-line.