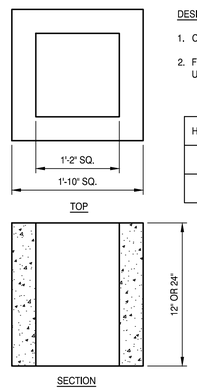

DESIGN NOTES:

1. CONCRETE 4,000 PSI AT 28 DAYS.
2. FRAMES AND COVERS ARE AVAILABLE UPON REQUEST.

HEIGHT	WEIGHT	ITEM #
12"	300 LBS	B-1001
24"	600 LBS	B-1002

ELECTRICAL HAND HOLE (G10)

NOT TO SCALE

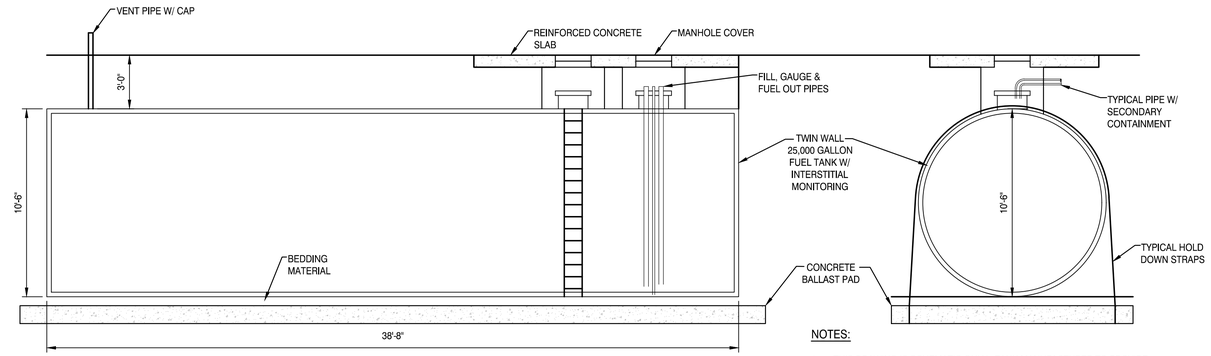

NOTES:

1. THIS DRAWING IS SCHEMATIC ONLY. TANK MANUFACTURER TO PROVIDE SHOP DRAWINGS SHOWING TANK DIMENSIONS, OPENINGS, CONNECTIONS, VENTING AND PROTECTIVE ANODES.
2. TANK MANUFACTURE SHALL MEET ALL REQUIREMENTS FOR REGISTRATION AS AN UNDERGROUND FUEL STORAGE TANK IN THE STATE OF MAINE.

UNDERGROUND FUEL STORAGE TANK (G1)

NOT TO SCALE

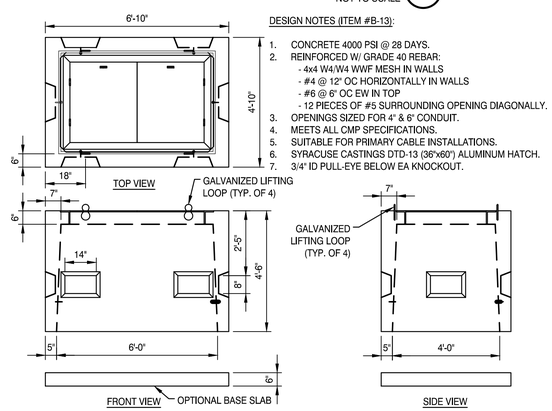

DESIGN NOTES (ITEM #B-13):

1. CONCRETE 4000 PSI @ 28 DAYS.
2. REINFORCED W/ GRADE 40 REBAR:
   - 4x4 W4/W4 WWF MESH IN WALLS
   - #4 @ 12" OC HORIZONTALLY IN WALLS
   - #6 @ 6" OC EW IN TOP
   - 12 PIECES OF #5 SURROUNDING OPENING DIAGONALLY.
3. OPENINGS SIZED FOR 4" & 6" CONDUIT.
4. MEETS ALL CMP SPECIFICATIONS.
5. SUITABLE FOR PRIMARY CABLE INSTALLATIONS.
6. SYRACUSE CASTINGS DTD-13 (36"x60") ALUMINUM HATCH.
7. 3/4" ID PULL-EYE BELOW EA KNOCKOUT.

ELECTRICAL MANHOLE (D9)

NOT TO SCALE

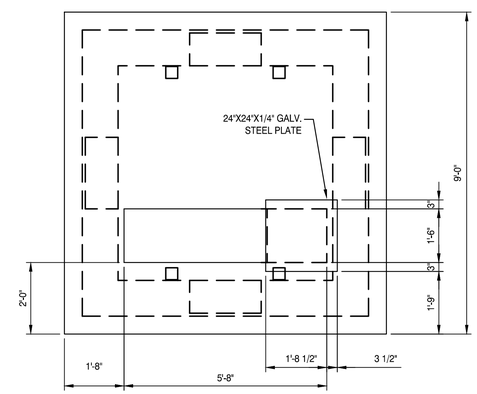

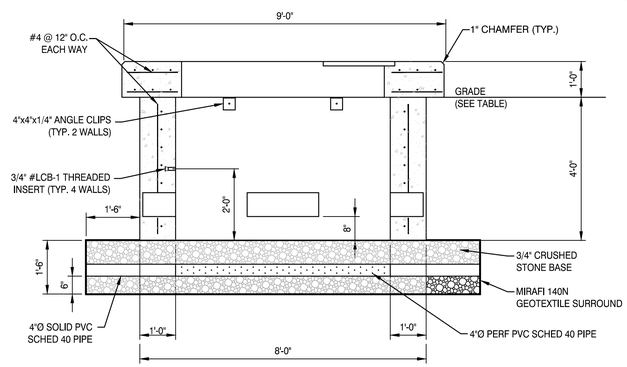

9.0' TRANSFORMER PAD (D1)

NOT TO SCALE

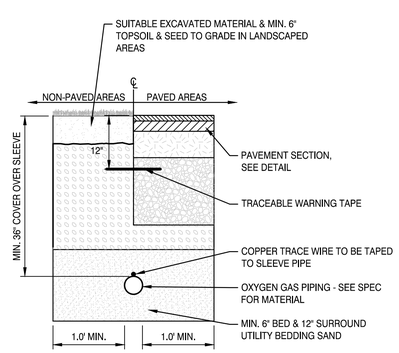

OXYGEN PIPE TRENCH DETAIL (A9)

NOT TO SCALE

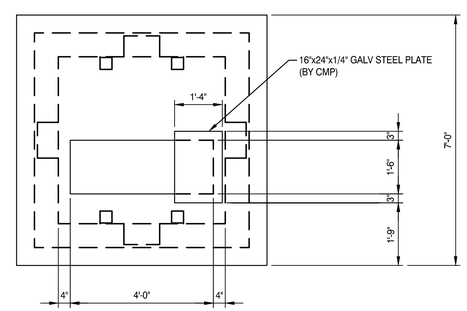

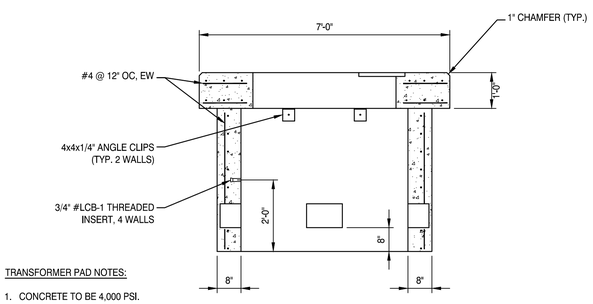

TRANSFORMER PAD NOTES:

1. CONCRETE TO BE 4,000 PSI.
2. PAD TO BE IN ACCORDANCE WITH LOCAL UTILITY SPECIFICATIONS.
3. PROVIDE ONE 8" X 12" KNOCKOUT AT EACH WALL, MIN, OR AS REQUIRED.

7.0' TRANSFORMER PAD (A1)

NOT TO SCALE

REV	DESCRIPTION	DATE

ISSUED FOR PERMIT

CURRENT ISSUE STATUS:

TRUE NORTH:

SMRT Architects and Engineers
144 Fore Street/P.O. BOX 618
Portland, Maine 04104
1.877.700.7678
www.smrtinc.com
ARCHITECTURE | ENGINEERING | PLANNING | INTERIORS | ENERGY
SMRT

RANSOM Consulting Engineers and Scientists
Ransom Consulting Engineers and Scientists
400 Commercial Street, Suite 400
Portland, Maine 04101

NORDIC AQUAFARMS
285 NORTHPORT AVENUE

BELFAST, MAINE

ELECTRICAL, FUEL, & GAS UTILITY DETAILS

SHEET TITLE:

0 1/2" 1" 2" 3"

SCALE: AS SHOWN

PROJECT MANAGER:	ADB	PROJECT NO:	18076
A/E OF RECORD:	ADJ		
JOB CAPTAIN:	SP		
DRAWN BY:	WSM		
SMRT FILE:	CU50318076	SHEET No.	CU503

© COPYRIGHT 2018 SMRT INC.

NOT FOR CONSTRUCTION

24x36