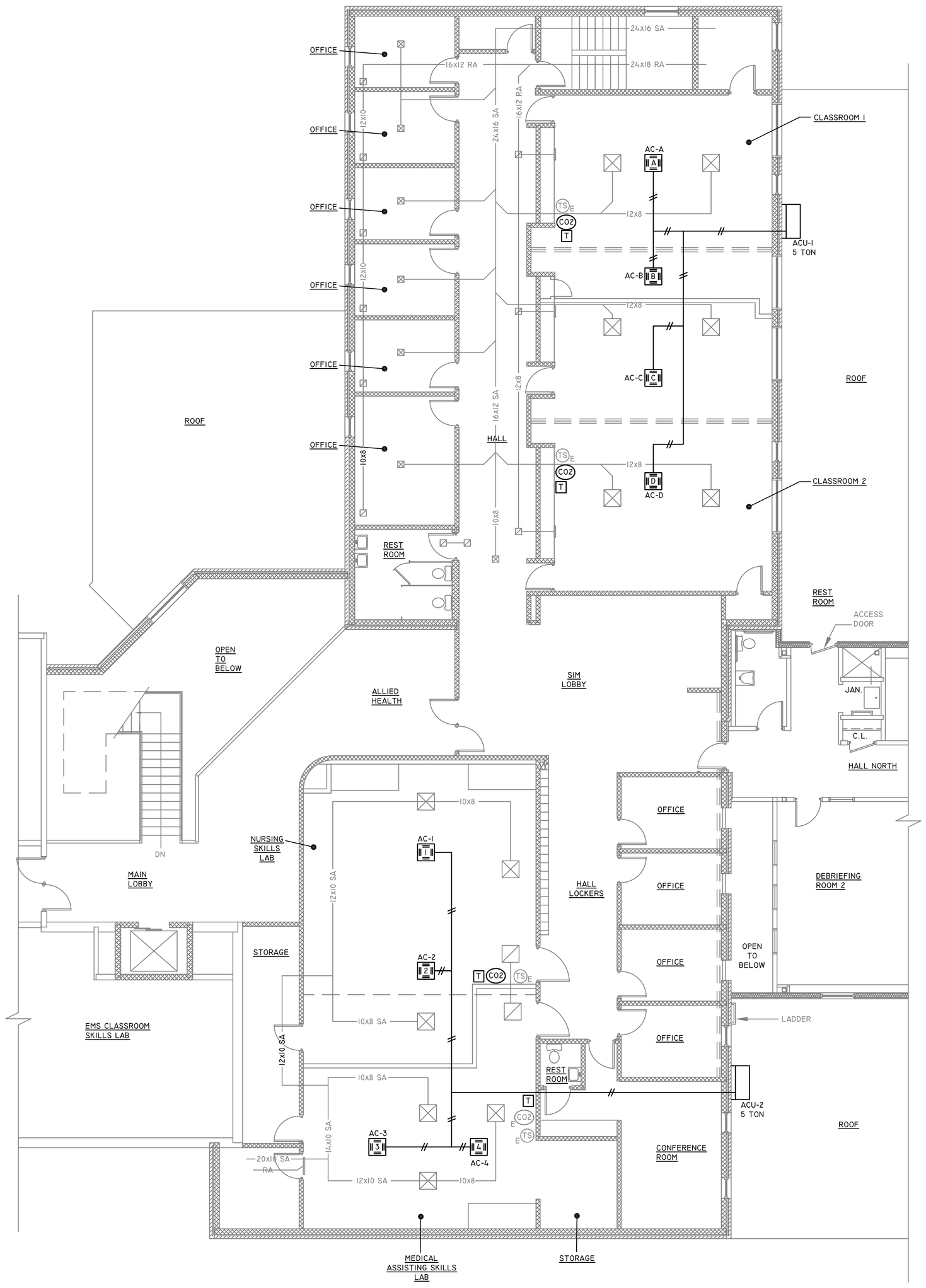

SECOND FLOOR PLAN

SCALE: 1/8"=1'-0"

SCHEDULES

AIR CONDENSING UNIT SCHEDULE

TAG NO.	AREA SERVED	MODEL DAIKIN	CAPACITY TONS	EFFICIENCY		CAPACITY		REFRIGERANT	ELECTRICAL			UNIT WEIGHT	REMARKS
				IEER	COP	COOLING	HEATING		VOLTS	PHASE	FLA		
ACU-1	CLASSROOM 1 & 2	RXTQ60-TAVJU	5 TON	18.0	-	57571 BTU/HR	52868 BTU/HR	R410A	208	1-PH	29.1	224.9 LBS	2,4,5
ACU-2	MEDICAL AS. SKILLS LAB/NURSING SKILLS LAB	RXTQ60-TAVJU	5 TON	18.0	-	57424 BTU/HR	57492 BTU/HR	R410A	208	1-PH	29.1	224.9 LBS	2,4,5

VARIABLE AIR CONDITIONING EVAPORATOR UNIT SCHEDULE

TAG NO.	AREA SERVED	OA	TOTAL CFM	DAIKIN	INDOOR EVAPORATOR UNIT								NOTES
				MODEL NO.	COOLING	HEATING	SMBH	ELEC. CHARACTERISTICS				WEIGHT (LBS)	
								POWER	MCA	MFA	FLA		
AC-A	CLASSROOM 1	0	353	FXZQ12TAVJU	11,944	12,600	-	208/1PH	-	-	0.4	36.4	1,2,3,5
AC-B	CLASSROOM 1	0	353	FXZQ12TAVJU	11,944	12,600	-	208/1PH	-	-	0.4	36.4	1,2,3,5
AC-C	CLASSROOM 2	0	511	FXZQ18TAVJU	18,086	18,242	-	208/1PH	-	-	0.6	41.9	1,2,3,5
AC-D	CLASSROOM 2	0	511	FXZQ18TAVJU	18,086	18,242	-	208/1PH	-	-	0.6	41.9	1,2,3,5
AC-1	NURSE SKILLS LAB	0	511	FXZQ18TAVJU	18,086	12,600	-	208/1PH	-	-	0.6	41.9	1,2,3,5
AC-2	NURSE SKILLS LAB	0	511	FXZQ18TAVJU	18,086	12,600	-	208/1PH	-	-	0.6	41.9	1,2,3,5
AC-3	MED ASSIT. SK. LAB	0	353	FXZQ12TAVJU	11,944	18,242	-	208/1PH	-	-	0.4	36.4	1,2,3,5
AC-4	MED ASSIT. SK. LAB	0	353	FXZQ12TAVJU	11,944	18,242	-	208/1PH	-	-	0.4	36.4	1,2,3,5

NOTES: 1) REMOTE WALL CONTROLLER, 2) BACNET INTERFACE W/ EXISTING B.M.S., 3) CONDESATE PUMP, 4) WALL MOUNT BRACKETS, 5) FACTORY START UP EQUIPMENT BASED UPON DAIKIN MANUFATURE

DETAILS

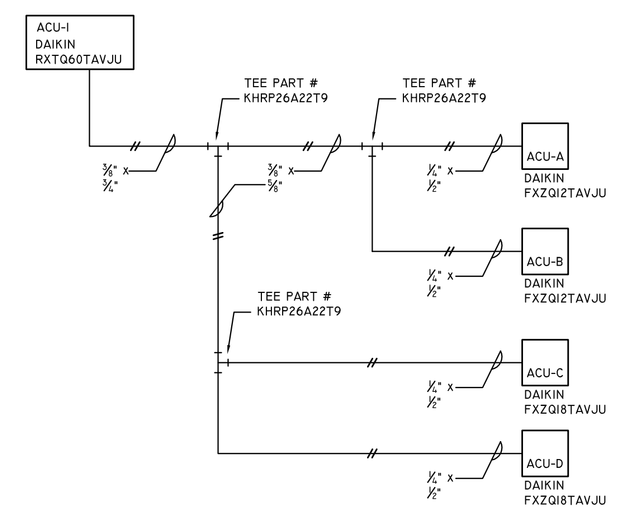

ACU-1 PIPING DETAIL

SCALE: N.T.S.

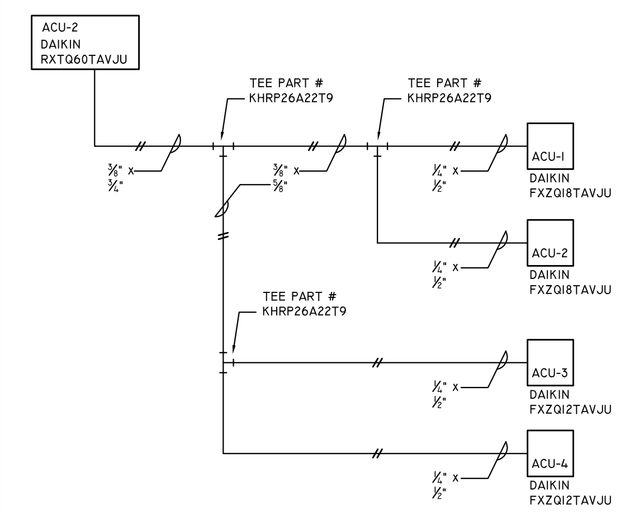

ACU-2 PIPING DETAIL

SCALE: N.T.S.

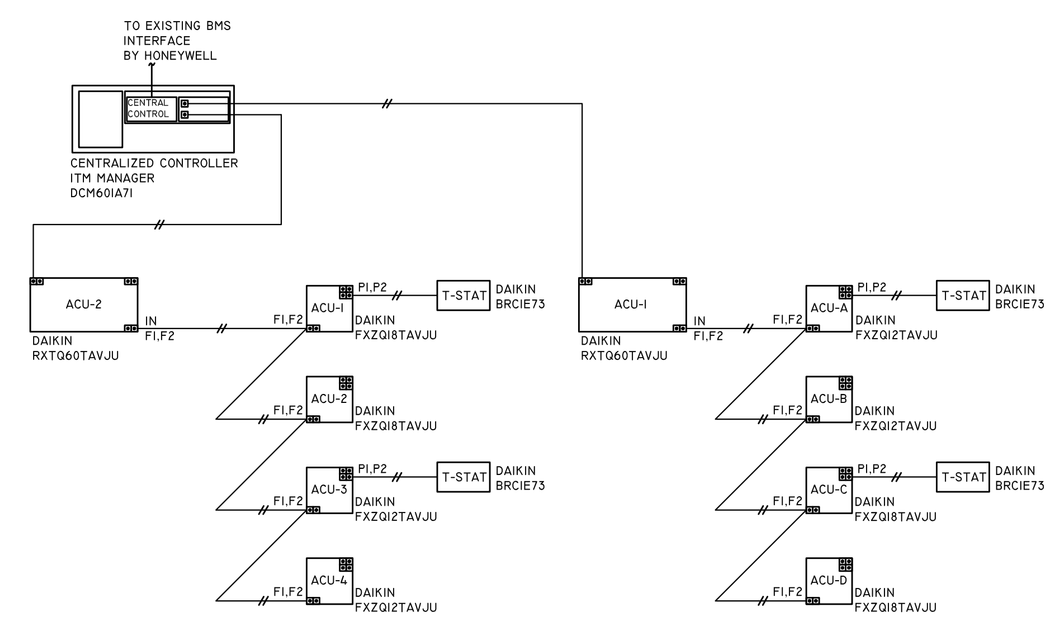

MECHANICAL CONTROL DIAGRAM

SCALE: N.T.S.

Armstrong Engineering
Mechanical Electrical Design Consultants
94 Presque Isle Street, Fort Fairfield, Maine 04742
Phone (207) 473-7117 Fax (207) 476-5621

Copyright 2019 by
Armstrong Engineering
All Rights Reserved
Reuse or reproduction of the contents of this documentation is not permitted without the written permission of Armstrong Engineering.

- ☐ FOR PRELIMINARY REVIEW
- ■ FOR PROJECT BIDDING
- ☐ FOR PROJECT CONSTRUCTION
- ☐ RECORD DRAWINGS

STATE OF MAINE
JEFFREY M. ARMSTRONG
ENG. 5372
LICENSED
PROFESSIONAL ENGINEER

NMCC-CHRISTIE BUILDING.
PRESQUE ISLE, MAINE

NURSING / CLASSROOM
AIR CONDITIONING

REV	DATE	DESCRIPTION

SHEET TITLE:

MECHANICAL PIPING PLAN

APRIL 02, 2019

SCALE-AS NOTED

M-1

BREM PROJECT#: PT3054

AE PROJECT#: 1902-18