Allied Engineering

Structural Mechanical Electrical Plumbing

CENTER BUILDING
RENOVATION FOR TEMPORARY STORAGE
AMHI FACILITY
HOSPITAL ROAD
AUGUSTA, ME

Issued for Bid

September 27, 2021
AEI Project No: 21050

Prepared for:
Jill Instasi, Senior Project Manager
Maine Bureau of General Services
77 State House Station
Augusta, ME, 04333

00 01 07 - SEALS PAGE

1.1 DESIGN PROFESSIONALS OF RECORD

A. Structural Engineer/Registered Roof Consultant:

1. William P. Faucher, P.E., SECB, LEED AP, Registered Roof Consultant
2. ME PE-7133; RRC #659.

B. Mechanical Engineer

1. Anthony S. Davis, P.E.
2. ME PE-8834

C. Electrical Engineer

1. Brian Gardner, P.E.
2. ME PE-15506

D. Architect
1. Guy Labrecque, AIA, CWS Architects
2. ME Licensed Architect - #2568

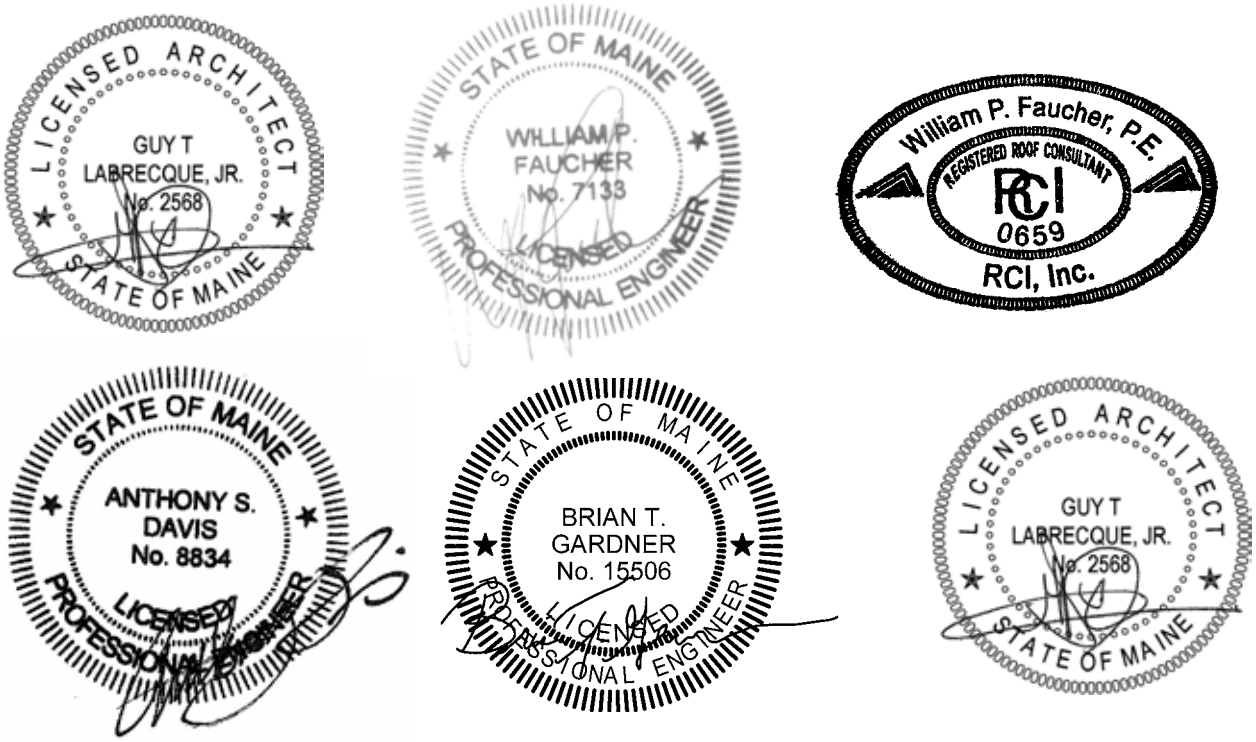

END OF DOCUMENT 000107

Division	Section Title

SPECIFICATIONS GROUP

General Requirements Subgroup

DIVISION 00 – PROCURMENT AND CONSTRACTING REQUIREMENTS

000000	PROJECT COVER
000107	SEALS PAGE
000110	TABLE OF CONTENTS
001113	NOTICE TO CONTRACTORS
002113	INSTRUCTIONS TO BIDDERS
004113	CONTRACTOR BID FORM
004313	CONTRACTOR BID BOND
005213	CONTRACT AGREEMENT
006113.13	CONTRACTOR PERFORMANCE BOND
006113.16	CONTRACTOR PAYMENT BOND
006276	BGS APPLICATION FOR PAYMENT
006276.01	BGS CONTINUATION SHEET
006346	BGS CONSTRUCTION CHANGE DIRECTIVE
006363	BGS CHANGE ORDER TABLE A & B
006363.01	BGS CHANGE ORDER TABLE C
007100	DEFINITIONS
007213	GENERAL CONDITIONS
007346	WAGE DETERMINATION SCHEDULE
	SAMPLE CONSTRUCTION CONFERENCE AGENDA

DIVISION 01 - GENERAL REQUIREMENTS

010000	BASIC REQUIREMENTS
010700	ABBREVIATIONS AND DEFINITIONS
011419	CONTRACTOR’S USE OF PREMISES
012100	ALLOWANCES
012200	UNIT PRICES
013000	ADMINISTRATIVE REQUIREMENTS
013119	PROJECT MEETINGS
013200	PROJECT RECORD DOCUMENTS
013323	SHOP DRAWINGS, PRODUCT DATA AND SAMPLES
015000	TEMPORARY FACILITIES AND CONTROLS
015600	TEMPORARY BARRIERS, ENCLOSURES & EQUIPMENT
016600	PRODUCT HANDLING
017000	CONTRACT CLOSEOUT
017413	CLEANING
017419	CONSTRUCTION WASTE MANAGEMENT AND DISPOSAL

FACILITY CONSTRUCTION SUBGROUP

DIVISION 02 – EXISTING CONDITIONS
024119 SELECTIVE DEMOLITION

DIVISION 03 – CAST-IN-PLACE CONCRETE
033000 CAST-IN-PLACE CONCRETE

DIVISION 04 – MASONRY
045000 MASONRY RESTORATION AND CLEANING

DIVISION 05 – METALS
053100 STEEL DECK
055000 METAL FABRICATIONS

DIVISION 06 - WOOD, PLASTICS, AND COMPOSITES
061000 ROUGH CARPENTRY
062013 EXTERIOR FINISH CARPENTRY

DIVISION 07 - THERMAL AND MOISTURE PROTECTION
072112 THERMAL INSULATION
072140 SPRAY FOAM INSULATION
073126 SLATE SHINGLES
075323 ETHYLENE PROPYLENE DIENE MONOMER (EPDM) ROOFING
076200 SHEET METAL FLASHING AND TRIM
078413 THROUGH-PENETRATION FIRESTOP SYSTEMS
079000 JOINT PROTECTION
079200 JOINT SEALANTS

DIVISION 08 – OPENINGS
081100 METAL DOORS AND FRAMES
083300 INSULATED ROLLING SERVICE FOORS
085213 METAL CLAD WOOD WINDOWS
087100 FINISH HARDWARE
088000 GLASS AND GLAZING

DIVISION 09 – FINISHES
092116 GYPSUM BOARD ASSEMBLIES
095153 ACOUSTICAL TILE CEILINGS
096723 RESINOUS FLOORING
096800 CARPETING
099000 PAINTING AND COATING
099113 EXTERIOR PAINTING

FACILITY SERVICES SUBGROUP

DIVISION 21 - FIRE SUPPRESSION

211000	FIRE-SUPPRESSION SPRINKLERS

DIVISION 22 – PLUMBING

221116	DOMESTIC WATER PIPING
221123	FACILITY FUEL GAS PIPING
221316	PLUMBING SANITARY AND STORM PIPING

DIVISION 23 - HEATING, VENTILATING, AND AIR CONDITIONING (HVAC)

230500	COMMON WORK RESULTS FOR MECHANICAL
230533	HEAT TRACING FOR HVAC PIPING
230593	TESTING, ADJUSTING, AND BALANCING FOR HVAC
230900	INSTRUMENTATION AND CONTROL FOR HVAC
230993	SEQUENCE OF OPERATIONS
232113	HYDRONIC HVAC PIPING
232123	HYDRONIC PUMPS
233113	DUCTWORK
233600	AIR TERMINALS
233713	DIFFUSERS, REGISTERS, AND GRILLES
235123	GAS VENTS
235216	CONDENSING BOILERS
237413	ROOFTOP AIR CONDITIONERS
238130	DUCTLESS SPLIT-SYSTEM AIR-CONDITIONING UNITS
238239	CABINET UNIT HEATERS
238413	HUMIDIFIERS

DIVISION 26 – ELECTRICAL

261000	BASIC ELECTRICAL REQUIREMENTS

DIVISION 28 – ELECTRONIC SAFETY AND SECURITY

280513	CONDUCTORS AND CABLES FOR ELECTRONIC SAFETY AND SECURITY
281500	ACCESS CONTROL
283111	DIGITAL ADDRESSABLE FIRE-ALARM SYSTEM
283115	EMERGENCY RESPONDER RADIO ANTENNA REPEATER SYSTEM

LIST OF DRAWINGS

G-000	COVER SHEET
A0.01	NOTES AND LEGEND
LS1.10	LIFE SAFETY PLAN
AD1.10	OVERALL FIRST FLOOR REMOVALS FLOOR PLAN
AD1.11	ENLARGED REMOVALS PLAN – NORTH
AD1.12	ENLARGED REMOVALS PLAN – SOUTH
AD1.13	ENLARGED REMOVALS PLAN – SOUTH
A1.10	OVERALL FIRST FLOOR PLAN
A1.11	ENLARGED FLOOR PLAN – NORTH
A1.12	ENLARGED FLOOR PLAN – SOUTH
A1.13	ENLARGED FLOOR PLAN – SOUTH
A2.10	OVERALL FIRST FLOOR REFLECTED CEILING PLAN
A2.11	ENLARGED REFLECTED CEILING PLAN - NORTH
A2.12	ENLARGED REFLECTED CEILING PLAN – SOUTH
A2.13	ENLARGED REFLECTED CEILING PLAN – SOUTH
A3.01	ELEVATIONS
A3.02	ELEVATIONS
A3.03	ELEVATIONS
A7.01	DETAILS
A8.01	DOOR AND DOOR FRAME SCHEDULE, ELEVATIONS AND DETAILS
A8.20	WINDOW SCHEDULE, ELEVATIONS AND DETAILS
A9.00	INTERIOR FINISH LEGEND AND SCHEDULE
S-000	STRUCTURAL - GENERAL INFORMATION
SD-100	STRUCTURAL - FIRST FLOOR FRAMING DEMOLITION PLAN
SD-101	STRUCTURAL - ROOF FRAMING DEMOLITION PLAN
SF-100	STRUCTURAL - FRAMING PLAN
SF-101	STRUCTURAL - ROOF FRAMING PLAN
SF-110	ROOF PLAN
SF-200	EXTERIOR ELEVATIONS
SF-201	EXTERIOR ELEVATIONS
SF-500	STRUCTURAL - DETAILS
FP-100	FIRE PROTECTION FIRST FLOOR PLAN
P-000	PLUMBING AND HVAC NOTES, LEGEND AND ABBREVIATIONS
PL-100	PLUMBING BASEMENT PLAN
PL-101	PLUMBING FIRST FLOOR PLAN
MD-100	MECHANICAL DEMOLITION BASEMENT PLAN
MD-101	MECHANICAL DEMOLITION FIRST FLOOR PLAN

MH-100 MECHANICAL FIRST FLOOR PLAN
MH-500 MECHANICAL DETAILS AND NOTES
MH-600 MECHANICAL SCHEDULES

E-000 ELECTRICAL LEGEND
E-001 ELECTRICAL NOTES AND LEGEND
E-600 ELECTRICAL SCHEDULES AND DETAILS
E-601 ELECTRICAL SCHEDULES
ED-110 ELECTRICAL DEMO PLAN
EL-110 FIRST FLOOR LIGHTING PLAN
EP-100 BASEMENT PART PLAN
EP-110 FIRST FLOOR ELECTRICAL PLAN
EP-120 ELECTRICAL ROOF PLAN
EY-110 FIRST FLOOR SYSTEMS PLAN

END OF TABLE OF CONTENTS

001113 NOTICE TO CONTRACTORS

The Work of Project is defined by the Contract Documents and consists of the following infrastructure improvements:

The Maine State Museum (MSM) is looking for approximately 6,000 square feet of area for their agricultural collections and BGS is looking to renovate approximately 4,000 square feet for general storage as well. There is a basement directly below these spaces and multiple stories above the back portion of the proposed spaces.

Exterior envelope upgrades will address many of the water infiltration conditions associated with the low roof to main multi-story building intersections. Additional scope work includes, but it not limited to, roof slate replacement/repair, roof wall termination upgrades with counterflashing installation, roof drain installations, masonry repointing, copper roof valley replacements, window replacements/modifications wood façade and trim removal/replacements.

Water service upgrades inclusive of sprinkler, HVAC, plumbing, sewer and natural gas. It will be the intent to seal the spaces from rodent and insect infiltration as best practices allow.

<u>Structural/Envelope Repairs</u>

A. First floor framing upgrades for storage capacity.
B. Address storage space ceilings and walls as independent systems within the building and separate from the existing building environment.
C. Overhead door installation in exterior wall adjacent to the current loading dock.
D. Envelope repairs including, but not limited to:
    1. Base wall flashing,
    2. Main roof slate repair and open joint repairs/replacements.
    3. Roof valley, shed-to slope tie-in repairs, and eave flashing replacements,
    4. Dormer envelope repairs,
    5. Masonry repointing above low roof intersections with main building walls, all four (4) sides of upper main building.
    6. Windowsill modifications and window replacement to facilitate proper EPDM (low roof) to main building masonry sidewalls.

<u>Mechanical, Plumbing, and Fire Protection</u>

A. New system of Heating, Ventilation, and Air Conditioning (HVAC) to serve the proposed Museum Storage Area. System shall include humidification and dehumidification control as well as temperature control.
B. New system of HVAC to serve the proposed BGS Storage Area (General Storage)
C. Space heat for new mechanical and sprinkler rooms
D. Integrate new HVAC systems with the existing campus Honeywell Building Automation System
E. Plumbing to serve humidification and condensate drainage systems
F. Put into service, domestic water and sprinkler risers to serve the occupied spaces
G. New system of automatic sprinkler protection to serve the conditioned areas

Electrical Scope:

A. New fire alarm system to serve renovated space and include addressable control, monitoring and detection devices related to HVAC and fire protection systems (expandable for balance of building).
B. New LED lighting design for renovated space and for two means of egress from the renovated space.
C. Ceiling mounted vacancy sensor array for light control (manual on, auto off).
D. Ceiling mounted occupancy sensor array for egress paths and manual control for loading dock lighting (as well as MEPFP back of house rooms).
E. Power provisions for the new HVAC , plumbing and fire protection equipment serving the renovated spaces.
F. Survey and evaluation of power distribution equipment in the main electrical room currently serving the building to confirm the equipment has available capacity and is capable of being modified to suit program needs (the room was inaccessible the day of the walk through). We assume the equipment is not beyond its useful life (less than 20 years old) since the main electrical room is currently serving a campus data equipped room located in the building.
G. New power distribution branch panels (for lighting and power) and feeders for larger mechanical system equipment electrical loads. New electrical distribution equipment shall be served by the existing power distribution equipment in the existing main electrical room.
H. Provide small stand-by power distribution system (diesel generator, ATS and power panel) to support selected HVAC equipment necessary to prevent freeze protection of the systems and area withing the renovated space.
I. Conduit, boxes and line voltage power provisions required for supporting a security system to serve the renovated space (system designed by a state managed vendor)
J. Conduit, boxes and line voltage power provisions required for supporting a CCTV system to serve the renovated space (system designed by a state managed vendor)
K. Conduit, boxes and line voltage power provisions required for supporting an access control system to serve the renovated space (system designed by a state managed vendor)
L. Conduit, boxes and line voltage power provisions required for supporting tel/com service/devices to serve the renovated space (system designed by a state managed vendor)
M. The renovated space consists of a new Museum Storage Area and a BGS Storage Area (general storage) within a portion of the existing building envelope.

The cost of the work is approximately $1.8 million. The work to be performed under this contract shall be completed on or before the Final Completion date of ***June 15, 2022***.

1. Submit bids on a completed Contractor Bid Form, plus bid security when required, all scanned and included as an attachment to an email with the subject line marked "**Bid for *Center Building Renovations for Temporary Storage***" and addressed to the Bid Administrator at BGS.Architect@Maine.gov, so as to be received no later than **2:00:00 p.m.** on ***XX***.

Bid submissions will be opened and read aloud at the time and date noted above at the Bureau of General Services office, accessible as a video conference call. Those who wish to participate in the call must submit a request for access to BGS.Architect@Maine.gov.

Any bid received after the noted time will not be considered a valid bid and will remain unopened. Any bid submitted by any other means will not be considered a valid bid. The Bid Administrator may require the Bidder to surrender a valid paper copy of the bid form or the bid security document in certain circumstances.

Questions on the bid opening process shall be addressed to the Bid Administrator: Jill M. Instasi, Senior Project Manager, Division of Planning, Design & Construction, Bureau of General Services, 77 State House Station, Augusta, Maine 04333-0077, BGS.Architect@Maine.gov.

2. The bid shall be submitted on the Contractor Bid Form (section 00 41 13) provided in the Bid Documents. The Owner reserves the right to accept or reject any or all bids as may best serve the interest of the Owner.

3. Bid security is required on this project. If noted above as required, the Bidder shall include a satisfactory Bid Bond (section 00 43 13) or a certified or cashier's check for 5% of the bid amount with the completed bid form submitted to the Owner. The Bid Bond form is available on the BGS website.

4. Performance and Payment Bonds are required on this project. If noted above as required, the selected Contractor shall furnish a 100% contract Performance Bond (section 00 61 13.13) and a 100% contract Payment Bond (section 00 61 13.16) in the contract amount to cover the execution of the Work. Bond forms are available on the BGS website.

5. Filed Sub-bids are not required on this project.

6. There are no Pre-qualified General Contractors on this project. If Pre-qualified General Contractors are identified for this project, the name of each company, with their city and state, are listed below.

7. An on-site pre-bid conference *will* be conducted for this project. If a pre-bid conference is scheduled, it is *mandatory* for General Contractors and optional for Subcontractors and suppliers. Contractors who arrive late or leave early for a mandatory meeting may be prohibited from participating in this meeting and bidding. *October , 2:00 PM at the Center Building, AMHI Campus, Hospital Street, Augusta, ME 04330*.

8. Property Insurance for this construction contract, described in the Insurance Requirements section of the General Conditions of the contract, shall be *Renovation or addition insured by Contractor.*

Bid Documents - full sets only - will be available on or about *XX, 2021* and may be obtained *"at no cost"* from: *The Bureau of General Services contracts website address below:*

https://www.maine.gov/dafs/brem/business-opportunities#invitationforbid

9. Bid Documents may be examined at:

AGC Maine
188 Whitten Road
Augusta, ME 04332
Phone 207-622-4741 Fax 207-622-1625

Construction Summary
734 Chestnut Street
Manchester, NH 03104
Phone 603-627-8856 Fax 603-627-4524

00 21 13
Instructions to Bidders

1. Bidder Requirements

1.1 A bidder is a Contractor who is qualified, or has been specifically pre-qualified by the Bureau of General Services, to bid on the proposed project described in the Bid Documents.

1.2 Contractors and Subcontractors bidding on projects that utilize Filed Sub-bids shall follow the requirements outlined in these Bid Documents for such projects. See Section 00 22 13 for additional information.

1.3 Contractors and Subcontractors are not eligible to bid on the project when their access to project design documents prior to the bid period distribution of documents creates an unfair bidding advantage. Prohibited access includes consultation with the Owner or with design professionals engaged by the Owner regarding cost estimating, constructability review, or project scheduling. This prohibition to bid applies to open, competitive bidding or pre-qualified contractor bidding or Filed Sub-bidding. The Bureau may require additional information to determine if the activities of a Contractor constitute an unfair bidding advantage.

1.4 Each bidder is responsible for becoming thoroughly familiar with the Bid Documents prior to submitting a bid. The failure of a bidder to review evident site conditions, to attend available pre-bid conferences, or to receive, examine, or act on addenda to the Bid Documents shall not relieve that bidder from any obligation with respect to their bid or the execution of the work as a Contractor.

1.5 Prior to the award of the contract, General Contractor bidders or Filed Sub-bidders may be required to provide documented evidence to the Owner or the Bureau showing compliance with the provisions of this section, their business experience, financial capability, or performance on previous projects.

1.6 The selected General Contractor bidder will be required to provide proof of insurance before a contract can be executed.

1.7 Contracts developed from this bid shall not be assigned, sublet or transferred without the written consent of the Owner.

1.8 By submitting a bid the Contractor attests that it has not been declared ineligible to bid on State of Maine projects. The Director of the Bureau of General Services may disallow award of this contract to any Contractor if there is evidence that the Contractor or any of its Subcontractors, through their own fault, have been terminated, suspended for cause, debarred from bidding, agreed to refrain from bidding as part of a settlement, have defaulted on a contract, or had a contract completed by another party.

1.9 The Contractor attests that it is not presently indicted for or otherwise criminally or civilly charged by a Federal, State or local government entity with commission of any of the following offenses and has not within a three-year period preceding this bid been convicted of or had a civil judgment rendered against them for commission of fraud or a criminal offense in connection with obtaining, attempting to obtain, or performing a public (Federal, State or local) transaction, or contract under a public transaction, violation of Federal or State anti-trust statutes or commission of embezzlement, theft, forgery, bribery, falsification or destruction of records, making false statements, or receiving stolen property.

1.10 The Contractor shall not make any award or permit any award (subgrant or contract) at any tier to any party which is debarred or suspended or is otherwise excluded from or ineligible for participation in Federal assistance programs or State of Maine projects.

2. Authority of Owner

2.1 The Owner reserves the right to accept or reject any or all bids as may best serve the interest of the Owner.

2.2 Subject to the Owner's stated right to accept or reject any or all bids, the Contractor shall be selected on the basis of the lowest sum of an acceptable Base Bid plus any Alternate Bids the Owner elects to include. An acceptable bid is one from a responsive and responsible bidder.

3. Submitting Bids and Bid Requirements

3.1 Each bid shall be submitted on the forms provided in the Bid Documents.

3.2 Each bid shall be valid for a period of thirty calendar days following the Project bid closing date and time.

3.3 A bid that contains any escalation clause is considered invalid.

3.4 Bidders shall include a Bid Bond or other approved bid security with the bid form submitted to the Owner when the bid form indicates such bid security is required. The bond value shall be 5% of the bid amount. The form of bond is shown in section 00 43 13.

3.5 Bidders shall include the cost of Performance and Payment Bonds in the bid amount if the bid amount will result in a construction contract value over $125,000, inclusive of alternate bids that may be awarded in the contract. Pursuant to 14 M.R.S.A., Section 871, Public Works Contractors' Surety Bond Law of 1971, subsection 3, the selected Contractor is required to provide these bonds before a contract can be executed. The form of bonds are shown in section 00 61 13.13 and 00 61 13.16.

3.6 Bidders may modify bids in writing, by the same means as the original bid submission, prior to the bid closing time. Such written amendments shall not disclose the amount of the initial bid. If so disclosed, the entire bid is considered invalid.

3.7 Bidders shall acknowledge on the bid form all Addenda issued in a timely manner. The Consultant shall not issue Addenda affecting the content of the bid less than 72 hours prior to the bid closing time. Addenda shall be issued to all companies who are registered holders of Bid Documents.

3.8 A bid may be withdrawn without penalty if a written request by the bidder is presented to the Owner prior to the bid closing time. Such written withdrawal requests are subject to verification as required by the Bureau. After the bid closing time, such written withdrawal requests may be allowed in consideration of the bid bond or, without utilizing a bid bond, if the Contractor

provides documented evidence to the satisfaction of the Bureau that factual errors had been made on the bid form.

3.9 In the event State of Maine Offices unexpectedly close on the published date of a public bid opening in the location of that bid opening, prior to the time of the scheduled deadline, the new deadline for the public bid opening will be the following business day at the originally scheduled hour of the day, at the original location. Official closings are posted on the State of Maine government website.

3.10 The Owner may require, in a Notice of Intent to Award letter to the apparent low bidder, a Schedule of Values, Project Schedule, and List of Subcontractors and Suppliers as both a demonstration of capability of the Bidder and as a condition of award.

3.11 Projects which require a State of Maine wage determination will include that schedule as part of the Bid Documents. See section 00 73 46, if such rates are required.

3.12 Projects which require compliance with the Davis-Bacon Act are subject to the regulations contained the Code for Federal Regulations and the federal wage determination which is made a part of the Bid Documents. See section 00 73 46, if such rates are required.

3.13 The Owner is exempt from the payment of Maine State sales and use taxes as provided in 36 M.R.S. §1760 (1). The Contractor and Subcontractors shall not include taxes on exempt items in the construction contract.

41 13 CONTRACTOR BID FORM

Project: ***Center Building Renovations for Temporary Storage***

To: *Jill Instasi*
Bureau of General Services
111 Sewall Street, Cross State Office Building, 4th Floor
77 State House Station
Augusta, Maine 04333-0077

The undersigned, or *Bidder*, having carefully examined the form of contract, general conditions, specifications and drawings dated *September 27, 2021*, prepared by *Allied Engineering, Inc.* for **Bid for *Center Building Renovations for Temporary Storage***", as well as the premises and conditions relating to the work, proposes to furnish all labor, equipment and materials necessary for and reasonably incidental to the construction and completion of this project for the **Base Bid** amount of:

_____
_____
_____
_____

$ _____

1. Allowances *are included* on this project. *Bid amount above includes the following Allowances*

NO.	*ALLOWANCE*	*UNIT*	*BID QUANTITY*	*TOTAL ALLOWANCE INCLUDED IN BID*
1	*REPLACE WOOD TRIM AND SIDING AT DORMERS AT LOCATIONS NOTED ON CONTRACT DOCUMENTS (Masonry Note 1, Sheet SF-110, SF-200 and SF-201))*	*LS*	*1*	*$*
2	*ROOF SLATE REMOVE/REPLACE (Masonry Note 2, Sheet SF-110, SF-200 and SF-201))*	*SF*	*738*	*$*
3	*REPLACE GUTTER DOWNSPOUTS ROOF TO GRADE AT LOCATIONS NOTED ON CONTRACT DOCUMENTS. (Masonry Note 3, Sheet SF-110, SF-200 and SF-201)*	*LS*	*1*	*$*
4	*BRICK VENEER RAKE/REPOINT (Masonry Note 4, Sheet SF-110, SF-200 and SF-201))*	*SF*	*2,000*	*$*
5	*COPPER SHED ROOF TO SLATE ROOF INTESECTION REPLACEMENT AT LOCATIONS NOTED ON CONTRACT DOCUMENTS. (Masonry Note 6, Sheet SF-110, SF-200 and SF-201)*	*LS*	*1*	*$*
6	*REMOVE/REPLACE COPPER VALLEYS WITH STRIP OF SLATE ROOF EITHER SIDE VALLEY AND AT EAVES (Masonry Note 9, Sheet SF-110, SF-200 and SF-201)*	*LF*	*200*	*$*
7	*MASONRY FAÇADE SURFACE CLEANING FOR SURFACES OUTSIDE OF IDENTIFIED MASONRY REPOINTING.*	*SF*	*13,000*	*$*

2. Alternate Bids are included on this project.

A. **Deductive Alternate No. 1**: All work Associated with eliminating Storage Rooms 109 and 110 as well as the Corridor 141 from the project scope. All walls and doors shown to be removed and/or replaced are to remain as is. All work related to providing any and all wall furring and closed cell foam installations within and around these spaces is to be removed from the scope of work. This deduct will require the wall between Storage 111 and Vacant Space 140 is to be extended to Storage 108 closing off Corridor 141. As this would then become dead/inaccessible space, new door 140 will need to be provided between Corridor 141 and Vacant space 140. All associated work scopes noted within the mechanical and electrical drawings for these spaces shall be removed from the project as well.

$_____

B. **Deductive Alternate No. 2**: All work associated with eliminating paint applications to the bottom of roof deck and steel support structure within rooms Storage 116, Storage 118, Storage 120 and Storage 121.

$_____

3. Unit Prices for additional discovered areas of work:

NO.	*ALLOWANCE*	*UNIT*	*UNIT PRICE*
1	*REPLACE WOOD TRIM AND SIDING AT DORMERS*	*SF*	*$*
2	*ROOF SLATE REMOVE/RPELACE*	*SF*	*$*
3	*SLATE TO COPPER EAVE SKIRT REPLACE*	*SF*	*$*
4	*BRICK VENEER RAKE/REPOINT*	*SF*	*$*
5	*COPPER SHED ROOF TO SLATE ROOF INTESECTION REPLACEMENT*	*SF*	*$*
6	*REMOVE/REPLACE COPPER VALLEYS WITH STRIP OF SLATE ROOF EITHER SIDE VALLEY AND AT EAVES*	*LF*	*$*
7	*MASONRY FAÇADE SURFACE CLEANING*	*SF*	*$*
8	*SCRAPE AND PAINT EXTERIOR WINDOW TRIM AND APPLYS SEALANT*	*SF*	*$*
9	*SLATE SHINGLE REPLACEMENT*	*EA*	*$*

4. Any dollar amount line that is left blank by the Bidder shall be read as a bid of **$0.00**.

5. The Bidder acknowledges receipt of the following addenda to the specifications and drawings:

   Addendum No. Dated:_____

   Addendum No. Dated:_____

   Addendum No. Dated:_____

   Addendum No. Dated:_____

6. Bid security *is required* on this project. If noted above as required, the Bidder shall include a satisfactory Bid Bond (section 00 43 13) or a certified or cashier's check for 5% of the bid amount with this completed bid form submitted to the Owner.

7. Filed Sub-bids *are not required* on this project.

8. The Bidder agrees, if the Owner offers to award the contract, to provide any and all bonds and certificates of insurance, as well as Schedule of Values, Project Schedule, and List of Subcontractors and Suppliers if required by the Owner, and to sign the designated Construction Contract within twelve calendar days after the date of notification of such acceptance, except if the twelfth day falls on a State of Maine government holiday or other closure day, or a Saturday, or a Sunday, in which case the aforementioned documents must be received before 12:00 noon on the first available business day following the holiday, other closure day, Saturday, or Sunday.

   As a guarantee thereof, the Bidder submits, together with this bid, a bid bond or other acceptable instrument as and if required by the Bid Documents.

9. This bid is hereby submitted by:

Signature: _____

Printed name and title: _____

Company name: _____

Mailing address: _____

City, state, zip code: _____

Phone number: _____

Email address: _____

State of incorporation, if a corporation: _____

List of all partners, if a partnership: _____

00 43 13
Contractor Bid Bond

Bond No.: **insert bond number**

We, the undersigned, ***insert company name of Contractor***, ***select type of entity*** of ***insert name of municipality*** in the State of ***insert name of state*** as principal, and ***insert name of surety*** as Surety, are hereby held and firmly bound unto ***select title of obligee*** in the penal sum of ***five percent of the bid amount***, for the payment of which, well and truly to be made, we hereby jointly and severally bind ourselves, our heirs, executors, administrators, successors and assigns, signed this ***insert date, i.e.: 8th*** day of ***select month***, ***select year***, which is the same date as that of the first specified bid due date, or subsequent bid due date revised by addendum.

The condition of the above obligation is such that whereas the principal has submitted to the Owner, or State of Maine, to a certain bid, attached hereto and hereby made a part hereof, to enter into a contract in writing, for the construction of ***insert name of project as designated in the contract documents***

Now therefore:

If said bid shall be rejected, or, in the alternate,

If said bid shall be accepted and the principal shall execute and deliver a contract in the form of contract attached hereto, properly completed in accordance with said bid, and shall furnish a bond for the faithful performance of said contract, and for the payment of all persons performing labor or furnishing material in connection therewith, and shall in all other respects perform the agreement created by the acceptance of said bid, then this obligation shall be void.

Otherwise, the same shall remain in force and effect- it being expressly understood and agreed that the liability of the Surety for any and all claims hereunder shall, in no event, exceed the penal amount of this obligation as herein stated.

The Surety, for value received hereby stipulates and agrees that the obligation of said Surety and its bonds shall be in no way impaired or affected by any extension of the time within which the Obligee may accept such bid and said Surety does hereby waive notice of any such extension.

SAMPLE

[Fillable bond forms may be downloaded from the Bureau of General Services website.]

00 43 13
Contractor Bid Bond

In witness whereof, the principal and the Surety have hereunto set their hands and seals, and such of them as are corporations have caused their corporate seals to be hereto affixed and these presents to be signed by their proper officers, the day and year first set above.

Signed and sealed this ***insert date, i.e.: 8th*** day of ***select month***, ***select year***, which is the same date as that of the bid due date.

Contractor

(Signature)

insert name and title

insert company name

insert address
insert city state zip code

Surety

(Signature)

insert name and title

insert company name

insert address
insert city state zip code

If Contractor is a partnership, all partners shall execute the bond. A power of attorney document indicating that it still is in full force and effect shall be provided by the person executing this bond.

SAMPLE

[Fillable bond forms may be downloaded from the Bureau of General Services website.]

AdvantageME CT# _____

State of Maine
CONSTRUCTION CONTRACT

Large Construction Project
(Contract value $50,000 or greater. Contract includes Project Manual, Specifications and Drawings)

Agreement entered into by and between the ***insert contracting entity name*** hereinafter called the ***Owner*** and ***insert Contractor company name*** hereinafter called the ***Contractor***.

BGS Project No.: ***insert number assigned by BGS (not the PIP number)***
Other Project No.: _____

For the following Project: ***title of project shown on documents*** at ***facility or campus name***, ***municipality***, Maine.

The Specifications and the Drawings have been prepared by ***firm name***, acting as Professional-of-Record and named in the documents as the Consultant Architect or Engineer.

The *Owner* and *Contractor* agree as follows:

ARTICLE 1 COMPENSATION AND PAYMENTS

1.1 The Owner shall pay the Contractor to furnish all labor, equipment, materials and incidentals necessary for the construction of the Work described in the Specifications and shown on the Drawings the Contract Amount as shown below.

Base Bid	*$0.00*
Alternate Bid number and name or "no Alternates"	*$0.00*
Alternate Bid number and name or "no Alternates"	*$0.00*
Alternate Bid number and name or "no Alternates"	*$0.00*
Alternate Bid number and name or "no Alternates"	*$0.00*
Alternate Bid number and name or "no Alternates"	*$0.00*
Total Contract Amount	***$0.00***

1.2 The Contractor's requisition shall contain sufficient detail and supporting information for the Owner to evaluate and support the payment requested.

1.2.1 Payments are due and payable twenty-five working days from the date of receipt of a Contractor requisition which is approved by the Owner.

1.2.2 Provisions for late payments will be governed by 5 M.R.S. Chapter 144, *Payment of Invoices Received from Business Concerns*, and interest shall be calculated at 1% per month.

ARTICLE 2 TIME OF COMPLETION

2.1 The Work of this Contract shall be completed on or before the Final Completion date of ***31 December 2021***.

SAMPLE

The following abbreviated definitions are for reference only, see Section *00 71 00 Definitions* for actual definitions.
Substantial Completion: date of first beneficial use by the Owner.
Final Completion: the Contractor's final completion deadline.
Contract Expiration: the Owner's deadline for management of contract accounts.

ARTICLE 3 INELIGIBLE BIDDER

3.1 By signing this contract the Contractor attests that it has not been declared ineligible to bid on State of Maine projects. The Bureau of General Services may disallow award of this contract to any Contractor if there is evidence that the Contractor or any of its Subcontractors, through their own fault, have been terminated, suspended for cause, debarred from bidding, agreed to refrain from bidding as part of a settlement, have defaulted on a contract, or had a contract completed by another party.

3.2 By signing this contract the Contractor attests that it is not presently indicted for or otherwise criminally or civilly charged by a Federal, State or local government entity with commission of any of the following offenses and has not within a three-year period preceding this bid been convicted of or had a civil judgment rendered against them for commission of fraud or a criminal offense in connection with obtaining, attempting to obtain, or performing a public (Federal, State or local) transaction, or contract under a public transaction, violation of Federal or State anti-trust statutes or commission of embezzlement, theft, forgery, bribery, falsification or destruction of records, making false statements, or receiving stolen property.

3.3 The Contractor shall not make any award or permit any award (subgrant or contract) at any tier to any party which is debarred or suspended or is otherwise excluded from or ineligible for participation in Federal assistance programs or State of Maine projects.

ARTICLE 4 CONTRACTOR'S RESPONSIBILITIES

4.1 On this project, the Contractor ***shall*** furnish the Owner the appropriate contract bonds in the amount of 100% of the Contract Sum. Contract bonds are mandated if the Contract Sum exceeds $125,000, or if bonds are specifically required by the Contract Documents.

4.2 The Owner has verified the appropriate coverage with the State of Maine Division of Risk Management, and selected the proper option as follows. Property Insurance for this construction contract, described in the Insurance Requirements section of the General Conditions of the contract, shall be ***Non-standard project insured by Contractor***.

4.3 The Contractor shall comply with all laws, codes and regulations applicable to the Work.

4.4 The Contractor shall acquire all permits and third-party approvals applicable to the Work not specifically identified as provided by the Owner. Costs for Contractor-provided permits and third-party approvals shall be included in the Contract Sum identified in Section 1.1 above.

4.5 The Contractor shall remain an independent agent for the duration of this Contract, shall not become an employee of the State of Maine, and shall assure that no State employee will be compensated by, or otherwise benefit from, this Contract.

SAMPLE

4.6 The Contractor shall be responsible for any design cost, construction cost, or other cost incurred on the Project to the extent caused by the negligent acts, errors or omissions of the Contractor or their Subcontractors in the performance of Work under this Contract.

ARTICLE 5 OWNER'S RESPONSIBILITIES

5.1 The Owner shall provide full information about the objectives, schedule, constraints and existing conditions of the project. The Owner has established a budget with reasonable contingencies that meets the project requirements.

5.2 By signing this contract, the Owner attests that all State of Maine procurement requirements for this contract have been met, including the solicitation of competitive bids.

ARTICLE 6 INSTRUMENTS OF SERVICE

6.1 The Contractor's use of the drawings, specifications and other documents known as the Consultant's Instruments of Service is limited to the execution of the Contractor's scope of work of this project unless the Contractor receives the written consent of the Owner and Consultant for use elsewhere.

ARTICLE 7 MISCELLANEOUS PROVISIONS

7.1 This Contract shall be governed by the laws of the State of Maine.

7.2 The Owner and Contractor, respectively, bind themselves, their partners, successors, assigns and legal representatives to this Contract. Neither party to this Contract shall assign the Contract as a whole without written consent of the other party, which consent the Owner may withhold without cause.

7.3 Notwithstanding any other provision of this Agreement, if the Owner does not receive sufficient funds to fund this Agreement or funds are de-appropriated, or if the Owner does not receive legal authority from the Maine State Legislature or Maine Courts to expend funds intended for this Agreement, then the Owner is not obligated to make payment under this Agreement; provided, however, the Owner shall be obligated to pay for services satisfactorily performed prior to any such non-appropriation in accordance with the termination provisions of this agreement. The Owner shall timely notify the Consultant of any non-appropriation and the effective date of the non-appropriation.

ARTICLE 8 CONTRACT DOCUMENTS

8.1 The General Conditions of the contract, instructions to bidders, bid form, Special Provisions, the written specifications and the drawings, and any Addenda, together with this agreement, form the contract. Each element is as fully a part of the Contract as if hereto attached or herein repeated.

8.2 Specifications: ***indicate date of issuance of project manual***

8.3 Drawings: ***note each sheet number and title***

8.4 Addenda: ***note each addenda number and date, or "none"***

SAMPLE

BGS Project No.: _____

The Agreement is effective as of the date executed by the approval authority.

OWNER	CONTRACTOR
(Signature) *(Date)* *name and title* *name of contracting entity* *address* *telephone* *email address*	*(Signature)* *(Date)* *name and title* *name of contractor company* *address* *telephone* *email address* *Vendor Number*

(Indicate names of the review and approval individuals appropriate to the approval authority.)

select proper approval authority	
Reviewed by:	Approved by:
(Signature) *(Date)* *insert name*	*(Signature)* *(Date)* *Joseph H. Ostwald*
Project Manager/ Contract Administrator	*Director, Planning, Design & Construction*

SAMPLE

[Fillable contract forms may be downloaded from the Bureau of General Services website.]

00 61 13.13
Contractor Performance Bond

Bond No.: **insert bond number**

We, the undersigned, ***insert company name of Contractor***, ***select type of entity*** of ***insert name of municipality*** in the State of ***insert name of state*** as principal, and ***insert name of surety*** as Surety, are hereby held and firmly bound unto ***select title of obligee*** in the penal sum of the Contract Price $ ***insert the Contract Price in numbers*** for the payment of which, well and truly to be made, we hereby jointly and severally bind ourselves, our heirs, executors, administrators, successors and assigns.

The condition of the above obligation is such that if the principal shall promptly and faithfully perform the contract entered into this ***insert date, i.e.: 8th*** day of ***select month***, ***select year***, which is the same date as that of the notice of intent to award letter, or in the absence of such a letter, not later than the date the Owner signs the construction contract, for the construction of ***insert name of project as designated in the contract documents***, then this obligation shall be null and void.

Otherwise, the same shall remain in force and effect- it being expressly understood and agreed that the liability of the Surety for any and all claims hereunder shall, in no event, exceed the penal amount of this obligation as herein stated.

The Surety, for value received hereby stipulates and agrees that the obligation of said Surety and its bonds shall be in no way impaired or affected by any extension of the time which the Obligee may accept during the performance of the contract and said Surety does hereby waive notice of any such extension.

SAMPLE

[Fillable bond forms may be downloaded from the Bureau of Real Estate Management website.]

00 61 13.13
Contractor Performance Bond

In witness whereof, the principal and the Surety have hereunto set their hands and seals, and such of them as are corporations have caused their corporate seals to be hereto affixed and these presents to be signed by their proper officers, the day and year first set above.

Signed and sealed this ***insert date, i.e.: 8th*** day of ***select month***, ***select year***, which is the same date as that of the notice of intent to award letter, or in the absence of such a letter, not later than the date the Owner signs the construction contract.

Contractor

_____

(Signature)

insert name and title

insert company name

insert address
insert city state zip code

Surety

_____

(Signature)

insert name and title

insert company name

insert address
insert city state zip code

If Contractor is a partnership, all partners shall execute the bond. A power of attorney document indicating that it still is in full force and effect shall be provided by the person executing this bond.

SAMPLE

[Fillable bond forms may be downloaded from the Bureau of Real Estate Management website.]

00 61 13.16
Contractor Payment Bond

Bond No.: **insert bond number**

We, the undersigned, ***insert company name of Contractor***, ***select type of entity*** of ***insert name of municipality*** in the State of ***insert name of state*** as principal, and ***insert name of surety*** as Surety, are hereby held and firmly bound unto ***select title of obligee*** in the penal sum of the Contract Price $ ***insert the Contract Price in numbers*** for the use and benefit of claimants, defined as an entity having a contract with the principal or with a subcontractor of the principal for labor, materials, or both labor and materials, used or reasonably required for use in the performance of the contract, for the payment of which, well and truly to be made, we hereby jointly and severally bind ourselves, our heirs, executors, administrators, successors and assigns.

The condition of the above obligation is such that if the principal shall promptly satisfy all claims and demands incurred for all labor and materials, used or required by the principal in connection with the work described in the contract entered into this ***insert date, i.e.: 8th*** day of ***select month***, ***select year***, which is the same date as that of the notice of intent to award letter, or in the absence of such a letter, not later than the date the Owner signs the construction contract, for the construction of ***insert name of project as designated in the contract documents***, and shall fully reimburse the oblige for all outlay and expense with said oblige may incur in making good any default of said principal, then this obligation shall be null and void.

Otherwise, the same shall remain in force and effect- it being expressly understood and agreed that the liability of the Surety for any and all claims hereunder shall, in no event, exceed the penal amount of this obligation as herein stated.

The Surety, for value received hereby stipulates and agrees that the obligation of said Surety and its bonds shall be in no way impaired or affected by any extension of the time which the Obligee may accept during the performance of the contract and said Surety does hereby waive notice of any such extension.

SAMPLE

[Fillable bond forms may be downloaded from the Bureau of Real Estate Management website.]

00 61 13.16
Contractor Payment Bond

In witness whereof, the principal and the Surety have hereunto set their hands and seals, and such of them as are corporations have caused their corporate seals to be hereto affixed and these presents to be signed by their proper officers, the day and year first set above.

Signed and sealed this ***insert date, i.e.: 8th*** day of ***select month***, ***select year***, which is the same date as that of the notice of intent to award letter, or in the absence of such a letter, not later than the date the Owner signs the construction contract.

Contractor

_____

(Signature)

insert name and title

insert company name

insert address
insert city state zip code

Surety

_____

(Signature)

insert name and title

insert company name

insert address
insert city state zip code

If Contractor is a partnership, all partners shall execute the bond. A power of attorney document indicating that it still is in full force and effect shall be provided by the person executing this bond.

SAMPLE

[Fillable bond forms may be downloaded from the Bureau of Real Estate Management website.]

01 May 2020

AdvantageME CT#

State of Maine
CONSTRUCTION CONTRACT
Application for Payment

Project name
location / school / campus

Contractor Company name
address
city state zip code

Application Number: **1**

Period Start Date: 1-Jan-2020
Period End Date: 31-Jan-2020
BGS Project No.:
Other Project No.:

1	Original Contract Amount			$0
2	Net of Change Orders to Date	(from table below)		$0
3	Contract Sum to Date	(line 1 plus or minus line 2)		$0
4	Total Completed and Stored to Date	(column G on Continuation Sheet)		$0
5a	5% Retainage of Completed Work	(columns D + E x 5%)	$0	
5b	5% Retainage of Stored Materials	(column F x 5%)	$0	
5c	Total Retainage	(column I)		$0
6	Total Earned Less Retainage	(line 4 minus line 5c)		$0
7	Less Previous Approved Applications for Payment	(line 6 from previous Application)		$0
8	Current Payment Due	(line 6 minus line 7)		**$0**
9	Balance to Finish, Including Retainage	(line 3 minus line 6)	$0	

Change Order Summary	Additions	Deductions	
Total Changes Approved in Previous Months	$0	$0	
Total Changes Approved this Month	$0	$0	
Subtotals	$0	$0	
Net of Change Orders to Date			$0

The undersigned Contractor certifies that to the best of the Contractor's knowledge, information, and belief the Work covered by this Application for Payment has been completed in accordance with the Contract Documents, that all amounts have been paid by the Contractor for Work for which the previous Certificates for Payment were issued and payments received from the Owner, and that current payment shown herein is now due.

Contractor
Type company name here
Type person's name, title here

signature date

In accordance with the Contract Documents, based on on-site observations and the data comprising this Application, the Consultant certifies to the Owner that to the best of the Consultant's knowledge, information, and belief the Work has progressed as indicated, the quality of the Work is in accordance with the Contract Documents, and the Contractor is entitled to payment of the Amount Certified. **Amount Certified:** _____

Consultant (Architect or Engineer)
Type firm name here
Type person's name, title here

signature date

Owner
Type contracting entity name here
Type person's name, title here

signature date

Owner's Rep / other - clear text if not used
Type entity name here
Type person's name, title here

signature date

Bureau of General Services

Type person's name, title here

signature date

01 May 2020

State of Maine
CONSTRUCTION CONTRACT
Application for Payment - Continuation Sheet

Application Number: **1**
Period Start Date: 1-May-2020
Period End Date: 31-May-2020
BGS Project No.:
Other Project No.:

Project name

Contractor Company name

page 1
of 2

A	B	C	D	E	F	G		H	I
			Work Completed						
Item No.	Description of Work	Scheduled Value	From Previous Application (Previous D + E)	This Period: Work in Place	This Period: Stored Materials (Not in D or E)	Total Completed and Stored to Date (D + E + F)	% (G ÷ C)	Balance to Finish (C - G)	Retainage 5%
		$0	0	0	0	0	0.0%	$0	0
		$0	0	0	0	0	0.0%	$0	0
		$0	0	0	0	0	0.0%	$0	0
		$0	0	0	0	0	0.0%	$0	0
		$0	0	0	0	0	0.0%	$0	0
		$0	0	0	0	0	0.0%	$0	0
		$0	0	0	0	0	0.0%	$0	0
		$0	0	0	0	0	0.0%	$0	0
		$0	0	0	0	0	0.0%	$0	0
		$0	0	0	0	0	0.0%	$0	0
		$0	0	0	0	0	0.0%	$0	0
		$0	0	0	0	0	0.0%	$0	0
		$0	0	0	0	0	0.0%	$0	0
		$0	0	0	0	0	0.0%	$0	0
		$0	0	0	0	0	0.0%	$0	0
		$0	0	0	0	0	0.0%	$0	0
		$0	0	0	0	0	0.0%	$0	0
		$0	0	0	0	0	0.0%	$0	0
		$0	0	0	0	0	0.0%	$0	0
		$0	0	0	0	0	0.0%	$0	0
		$0	0	0	0	0	0.0%	$0	0
		$0	0	0	0	0	0.0%	$0	0
		$0	0	0	0	0	0.0%	$0	0
		$0	0	0	0	0	0.0%	$0	0
		$0	0	0	0	0	0.0%	$0	0
		$0	0	0	0	0	0.0%	$0	0
		$0	0	0	0	0	0.0%	$0	0
		$0	0	0	0	0	0.0%	$0	0
	Total	$0	$0	$0	$0	$0	0.0%	$0	$0

01 May 2020

State of Maine
CONSTRUCTION CONTRACT
Application for Payment - Continuation Sheet

Application Number: **1**
Period Start Date: 1-May-2020
Period End Date: 31-May-2020
BGS Project No.:
Other Project No.:

Project name

Contractor Company name

page 2
of 2

A	B	C	D	E	F	G		H	I
			Work Completed						
Item No.	Description of Work	Scheduled Value	From Previous Application (Previous D + E)	This Period: Work in Place	This Period: Stored Materials (Not in D or E)	Total Completed and Stored to Date (D + E + F)	% (G ÷ C)	Balance to Finish (C - G)	Retainage 5%
		$0	0	0	0	0	0.0%	$0	0
		$0	0	0	0	0	0.0%	$0	0
		$0	0	0	0	0	0.0%	$0	0
		$0	0	0	0	0	0.0%	$0	0
		$0	0	0	0	0	0.0%	$0	0
		$0	0	0	0	0	0.0%	$0	0
		$0	0	0	0	0	0.0%	$0	0
		$0	0	0	0	0	0.0%	$0	0
		$0	0	0	0	0	0.0%	$0	0
		$0	0	0	0	0	0.0%	$0	0
		$0	0	0	0	0	0.0%	$0	0
		$0	0	0	0	0	0.0%	$0	0
		$0	0	0	0	0	0.0%	$0	0
		$0	0	0	0	0	0.0%	$0	0
		$0	0	0	0	0	0.0%	$0	0
		$0	0	0	0	0	0.0%	$0	0
		$0	0	0	0	0	0.0%	$0	0
		$0	0	0	0	0	0.0%	$0	0
		$0	0	0	0	0	0.0%	$0	0
		$0	0	0	0	0	0.0%	$0	0
		$0	0	0	0	0	0.0%	$0	0
		$0	0	0	0	0	0.0%	$0	0
		$0	0	0	0	0	0.0%	$0	0
		$0	0	0	0	0	0.0%	$0	0
		$0	0	0	0	0	0.0%	$0	0
		$0	0	0	0	0	0.0%	$0	0
	Total Change Order Work	$0	$0	$0	$0	$0	0.0%	$0	$0
	Total Base Contract Work	$0	$0	$0	$0	$0	0.0%	$0	$0
	Grand Total	$0	$0	$0	$0	$0	0.0%	$0	$0

01 May 2020

State of Maine
CONSTRUCTION CONTRACT

Construction Change Directive

Project name
Contractor Company name

C. C. D. Number: **1**

CCD Item No.	Item Name and Description	Method of Compensation	Projected Calendar Days	Projected Item Cost
1			0	$0
			0	$0
			0	$0
			0	$0
			0	$0
		Totals	**0**	**$0**

Fully describe the scope of work of the CCD item in the table above and on attached drawings and specifications as necessary.

Indicate the reason for the work, and the estimated schedule and cost impacts.

This CCD records the order to do the work. The documented actual final time and cost changes are subject to approval in a subsequent Change Order process.

Consultant (A/E)

.....

Contractor

.....

Owner

.....

Owner's Rep / other - clear if not used

.....

Bureau of General Services

.....

signature date

01 May 2020

AdvantageME CT#

State of Maine
CONSTRUCTION CONTRACT
Change Order

Project name
location / school / campus

C. O. Number: **1**

Issue Date: 31-May-2020

Contractor Company name
address
city state zip code

BGS Project No.:
Other Project No.:

Table A *Show Deduct as a negative number, e.g.: "-$700".*

	Add	Deduct	Total
Net Amount of this Change Order	$0	$0	
Net Amount of Previous Change Orders	$0	$0	
Net of Change Orders to Date	$0	$0	$0
Original Contract Amount			$0
Revised Contract Amount			**$0**

Table B *Show Deduct as a negative number, e.g.: "-14".*

	Add	Deduct	Total
Net Calendar Days Adjusted by this Change Order	0	0	
Net Calendar Days Adjusted by Previous Change Orders	0	0	
Net of Change Orders to Date	0	0	0
Original Contract Final Completion Date			31-Dec-2021
Revised Contract Final Completion Date*			**31-Dec-2021**

Consultant (Architect or Engineer)
Type firm name here
Type person's name, title here

signature date

Contractor
Type company name here
Type person's name, title here

signature date

Owner
Type contracting entity name here
Type person's name, title here

signature date

Owner's Rep / other - clear if not used
Type entity name here
Type person's name, title here

signature date

Bureau of General Services
-
Type person's name, title here

signature date

Attach list of Change Order items (Table C) and all supporting documentation.

For reference only, see Section 00 71 00 Definitions for full definitions:
Substantial Completion Date: date of first beneficial use by Owner.
**Contract Final Completion Date: Contractor's final completion deadline.*
Contract Expiration Date: the Owner's deadline for management of contract accounts.

01 May 2020

State of Maine
CONSTRUCTION CONTRACT

Change Order - List of Items

Project name **C. O. Number:** **1**
Contractor Company name

Table C

CO Item No.	Item name	Reason Code	Calendar Days	Cost
1	Insert brief name of CO item here		0	$0
			0	$0
			0	$0
			0	$0
			0	$0
			0	$0
			0	$0
			0	$0
			0	$0
			0	$0
			0	$0
			0	$0
			0	$0
			0	$0
			0	$0
		Totals	**0**	**$0**

Reason Code

EO	Error or omission of Consultant
UC	Unforeseen job site condition
OC	Owner-generated change
RC	Regulatory authority-generated change
CC	Contractor-generated change

Attach this sheet to the BGS Change Order Table A (cost) and Table B (time) summaries and signature sheet, and the BGS Change Order Table D (detailed data) sheet, and other supporting documentation.

Use multiples of this Table C sheet, if necessary, with a subtotal on each sheet, and the sum of subtotals of each sheet equal to the totals on Table A and Table B.

00 71 00
Definitions

1. Definitions

1.1 *Addendum*: A document issued by the Consultant that amends the Bid Documents. Addenda shall not be issued less than seventy-two hours prior to the specified bid opening time.

1.2 *Allowance*: A specified dollar amount for a particular scope of work or service included in the Work that is identified in the Bid Documents and included in each Bidder's Bid. The Contractor shall document expenditures for an Allowance during the Project. Any unused balance shall be credited to the Owner. The Contractor is responsible for notifying the Owner of anticipated expenses greater than the specified amount and the Owner is responsible for those additional expenses.

1.3 *Alternate Bid*: The Contractor's written offer of a specified dollar amount, submitted on the Bid Form, for the performance of a particular scope of work described in the Bid Documents. The Owner determines the low bidder based on the sum of the base Bid and any combination of Alternate Bids that the Owner selects.

1.4 *Architect*: A Consultant acting as, or supporting, the Professional-of-Record who is responsible for the design of the Project. Equivalent to "Consultant" in State of Maine contract forms.

1.5 *Architectural Supplemental Instruction (ASI)*: A written instruction from the Architect for the purpose of clarification of the Contract Documents. An ASI does not alter the Contract Price or Contract Time. ASIs may be responses to RFIs and shall be issued by the Architect in a timely manner to avoid any negative impact on the Schedule of Work.

1.6 *Bid*: The Contractor's written offer of a specified dollar amount or amounts, submitted on a form included in the Bid Documents, for the performance of the Work. A Bid may include bonds or other requirements. A base Bid is separate and distinct from Alternate Bids, being the only cost component necessary for the award of the contract, and representing the minimum amount of Work that is essential for the functioning of the Project.

1.7 *Bid Bond*: The security designated in the Bid Documents, furnished by Bidders as a guaranty of good faith to enter into a contract with the Owner, should a contract be awarded to that Bidder.

1.8 *Bidder*: Any business entity, individual or corporation that submits a bid for the performance of the work described in the Bid Documents, acting directly or through a duly authorized representative. See also *Responsive and Responsible Bidder*.

1.9 *Bid Documents*: The drawings, procurement and contracting requirements, general requirements, and the written specifications -including all addenda, that a bidder is required to reference in the submission of a bid.

1.10 *Bureau*: The State of Maine Bureau of Real Estate Management (formerly known as Bureau of General Services, or BGS) in the Department of Administrative and Financial Services.

1.11 *Calendar days*: Consecutive days, as occurring on a calendar, taking into account each day of the week, month, year, and any religious, national or local holidays. Calendar days are used for changes in Contract Time.

1.12 *Certificate of Substantial Completion*: A document developed by the Consultant that describes the final status of the Work and establishes the date that the Owner may use the facility for its intended purpose. The Certificate of Substantial Completion may also include a provisional list of items - a "punch list" - remaining to be completed by the Contractor. The Certificate of Substantial Completion identifies the date from which the project warranty period commences.

1.13 *Certificate of Occupancy*: A document developed by a local jurisdiction such as the Code Enforcement Officer that grants permission to the Owner to occupy a building.

1.14 *Change Order (CO)*: A document that modifies the contract and establishes the basis of a specific adjustment to the Contract Price or the Contract Time, or both. Change Orders may address correction of omissions, errors, and document discrepancies, or additional requirements. Change Orders should include all labor, materials and incidentals required to complete the work described. A Change Order is not valid until signed by the Contractor, Owner and Consultant and approved by the Bureau.

1.15 *Change Order Proposal (COP) (see also Proposal)*: Contract change proposed by the Contractor regarding the contract amount, requirements, or time. The Contractor implements the work of a COP after it is accepted by all parties. Accepted COPs are incorporated into the contract by Change Order.

1.16 *Clerk of the Works*: The authorized representative of the Consultant on the job site. Clerk of the Works is sometimes called the Architect's representative.

1.17 *Construction Change Directive (CCD)*: A written order prepared by the Consultant and signed by the Owner and Consultant, directing a change in the Work prior to final agreement with the Contractor on adjustment, if any, in the Contract Price or Contract Time, or both.

1.18 *Contract*: A written agreement between the Owner and the successful bidder which obligates the Contractor to perform the work specified in the Contract Documents and obligates the Owner to compensate the Contractor at the mutually accepted sum, rates or prices.

1.19 *Contract Bonds (also known as Payment and Performance Bonds)*: The approved forms of security, furnished by the Contractor and their surety, which guarantee the faithful performance of all the terms of the contract and the payment of all bills for labor, materials and equipment by the Contractor.

1.20 *Contract Documents*: The drawings and written specifications (including all addenda), Standard General Conditions, and the contract (including all Change Orders subsequently incorporated in the documents).

1.21 *Contract Price*: The dollar amount of the construction contract, also called *Contract Sum*.

1.22 *Contract Time*: The designated duration of time to execute the Work of the contract, with a specific date for completion.

1.23 *Contractor*: Also called the "General Contractor" or "GC" the individual or entity undertaking the execution of the general contract work under the terms of the contract with the Owner, acting directly or through a duly authorized representative. The Contractor is responsible for the means, methods and materials utilized in the execution and completion of the Work.

1.24 *Consultant*: The Architect or Engineer acting as Professional-of-Record for the Project. The Consultant is responsible for the design of the Project.

1.25 *Drawings*: The graphic and pictorial portion of the Contract Documents showing the design, location and dimensions of the Work, generally including plans, elevations, sections, details, schedules, and diagrams.

1.26 *Engineer*: A Consultant acting as, or supporting, the Professional-of-Record who is responsible for the design of the Project. Equivalent to "Consultant" in State of Maine contract forms.

1.27 *Filed Sub-bid*: The designated major Subcontractor's (or, in some cases, Contractor's) written offer of a specified dollar amount or amounts, submitted on a form included in the Bid Documents, for the performance of a particular portion of the Work. A Filed Sub-bid may include bonds or other requirements.

1.28 *Final Completion*: Project status establishing the date when the Work is fully completed in compliance with the Contract Documents, as certified by the Consultant. Final payment to the Contractor is due upon Final Completion of the Project.

1.29 *General Requirements*: The on-site overhead expense items the Contractor provides for the Project, typically including, but not limited to, building permits, construction supervision, Contract Bonds, insurance, field office, temporary utilities, rubbish removal, and site fencing. Overhead expenses of the Contractor's general operation are not included. Sometimes referred to as the Contractor's General Conditions.

1.30 *Owner*: The State agency which is represented by duly authorized individuals. The Owner is responsible for defining the scope of the Project and compensation to the Consultant and Contractor.

1.31 *Owner's Representative*: The individual or entity contracted by the Owner to be an advisor and information conduit regarding the Project.

1.32 *Overhead*: General and administrative expenses of the Contractor's principal and branch offices, including payroll costs and other compensation of Contractor employees, deductibles paid on any insurance policy, charges against the Contractor for delinquent payments, and costs related to the correction of defective work, and the Contractor's capital expenses, including interest on capital used for the work.

1.33 *Performance and Payment Bonds (also known as Contract Bonds)*: The approved forms of security, furnished by the Contractor and their surety, which guarantee the faithful performance of all the terms of the contract and the payment of all bills for labor, materials and equipment by the Contractor.

1.34 *Post-Bid Addendum*: Document issued by the Consultant that defines a potential Change Order prior to signing of the construction contract. The Post-Bid Addendum allows the Owner to negotiate contract changes with the Bidder submitting the lowest valid bid, only if the negotiated changes to the Bid Documents result in no change or no increase in the bid price.

A Post-Bid Addendum may also be issued after a competitive construction Bid opening to those Bidders who submitted a Bid initially, for the purpose of rebidding the Project work without re-advertising.

1.35 *Project*: The construction project proposed by the Owner to be constructed according to the Contract Documents. The Project, a public improvement, may be tied logistically to other public improvements and other activities conducted by the Owner or other contractors.

1.36 *Proposal (see also Change Order Proposal)*: The Contractor's written offer submitted to the Owner for consideration containing a specified dollar amount or rate, for a specific scope of work, and including a schedule impact, if any. A proposal shall include all costs for overhead and profit. The Contractor implements the work of a Proposal after it is accepted by all parties. Accepted Proposals are incorporated into the contract by Change Order.

1.37 *Proposal Request (PR)*: An Owner's written request to the Contractor for a Change Order Proposal.

1.38 *Punch List*: A document that identifies the items of work remaining to be done by the Contractor at the Close Out of a Project. The Punch List is created as a result of a final inspection of the work only after the Contractor attests that all of the Work is in its complete and permanent status.

1.39 *Request For Information (RFI)*: A Contractor's written request to the Consultant for clarification, definition or description of the Work. RFIs shall be presented by the Contractor in a timely manner to avoid any negative impact on the Schedule of Work.

1.40 *Request For Proposal (RFP)*: An Owner's written request to the Contractor for a Change Order Proposal.

1.41 *Requisition for Payment*: The document in which the Contractor certifies that the Work described is, to the best of the Contractor's knowledge, information and belief, complete and that all previous payments have been paid by the Contractor to Subcontractors and suppliers, and that the current requested payment is now due. See *Schedule of Values.*

1.42 *Responsive and Responsible Bidder*: A bidder who complies, on a given project, with the following *responsive* standards, as required by the bid documents:

provided specific qualifications to bid the project, if required;
attended mandatory pre-bid conferences, if required;
provided a bid prior to the close of the bid period;
submitted a complete bid form;
submitted other materials and information, such as bid security, as required;

and, meets the following minimums regarding these *responsible* standards:

sustains a satisfactory record of project performance;
maintains a permanent place of business in a known physical location;
possesses the financial means for short- and long-term operations;
possesses the appropriate technical experience;
employs adequate personnel and subcontractor resources;
maintains the equipment needed to perform the work;
complies with the proposed implementation schedule;
complies with the insurance and bonding requirements;
can provide post-construction warranty coverage;
and other criteria which can be considered relevant to the contract.

1.43 *Retainage*: The amount, calculated at five percent (5%) of the contract value or a scheduled value, that the Owner shall withhold from the Contractor until the work or portion of work is declared substantially complete or otherwise accepted by the Owner. The Owner may, if requested, reduce the amount withheld if the Owner deems it desirable and prudent to do so. (See Title 5 M.R.S.A., Section 1746.)

1.44 *Sample*: A physical example provided by the Contractor which illustrates materials, equipment or workmanship and establishes standards by which the Work will be judged.

1.45 *Schedule of the Work*: The document prepared by the Contractor and approved by the Owner that specifies the dates on which the Contractor plans to begin and complete various parts of the Work, including dates on which information and approvals are required from the Owner.

1.46 *Schedule of Values*: The document prepared by the Contractor and approved by the Owner before the commencement of the Work that specifies the dollar values of discrete portions of the Work equal in sum to the contract amount. The Schedule of Values is used to document progress payments of the Work in regular (usually monthly) requisitions for payment. See *Requisition for Payment*.

1.47 *Shop Drawings*: The drawings, diagrams, schedules and other data specially prepared for the Work by the Contractor or a Subcontractor, manufacturer, supplier or distributor to illustrate some portion of the Work.

1.48 *Specifications*: The portion of the Contract Documents consisting of the written requirements of the Work for materials, equipment, systems, standards, workmanship, and performance of related services.

1.49 *Subcontractor*: An individual or entity undertaking the execution of any part of the Work by virtue of a written agreement with the Contractor or any other Subcontractor. Also, an individual or entity retained by the Contractor or any other Subcontractor as an independent contractor to provide the labor, materials, equipment or services necessary to complete a specific portion of the Work.

1.50 *Substantial Completion*: Project status indicating when the Work or a designated portion of the Work is sufficiently complete in compliance with the Contract Documents so that the Owner can occupy or utilize the Work for its intended purpose without unscheduled disruption. Substantial Completion is documented by the date of the Certificate of Substantial Completion signed by the Owner and the Contractor.

1.51 *Superintendent*: The representative of the Contractor on the job site, authorized by the Contractor to receive and fulfill instructions from the Consultant.

1.52 *Surety*: The individual or entity that is legally bound with the Contractor and Subcontractor to insure the faithful performance of the contract and for the payment of the bills for labor, materials and equipment by the Contractor and Subcontractors.

1.53 *Work*: The construction and services, whether completed or partially completed, including all labor, materials, equipment and services provided or to be provided by the Contractor and Subcontractors to fulfill the requirements of the Project as described in the Contract Documents.

00 72 13
General Conditions

Table of Contents of this General Conditions Section

1. Preconstruction Conference 2
2. Intent and Correlation of Contract Documents....2
3. Additional Drawings and Specifications 3
4. Ownership of Contract Documents 3
5. Permits, Laws, and Regulations 3
6. Taxes 4
7. Labor and Wages....4
8. Indemnification 5
9. Insurance Requirements 5
10. Contract Bonds....7
11. Patents and Royalties 8
12. Surveys, Layout of Work 8
13. Record of Documents....8
14. Allowances....8
15. Shop Drawings 9
16. Samples 9
17. Substitutions 9
18. Assignment of Contract....10
19. Separate Contracts....10
20. Subcontracts 10
21. Contractor-Subcontractor Relationship 11
22. Supervision of the Work....12
23. Observation of the Work 12
24. Consultant's Status....13
25. Management of the Premises 13
26. Safety and Security of the Premises 13
27. Changes in the Work 15
28. Correction of the Work....16
29. Owner's Right to do Work....17
30. Termination of Contract and Stop Work Action 17
31. Delays and Extension of Time 18
32. Payments to the Contractor 18
33. Payments Withheld 19
34. Liens....20
35. Workmanship 20
36. Close-out of the Work 21
37. Date of Completion and Liquidated Damages 21
38. Dispute Resolution 22

1. Preconstruction Conference

1.1 The Contractor shall, upon acceptance of a contract and prior to commencing work, schedule a preconstruction conference with the Owner and Consultant. The purpose of this conference is as follows.

1.1.1 Introduce all parties who have a significant role in the Project, including:
Owner (State agency or other contracting entity)
Owner's Representative
Consultant (Architect or Engineer)
Subconsultants
Clerk-of-the-works
Contractor (GC)
Superintendent
Subcontractors
Other State agencies
Construction testing company
Commissioning agent
Special Inspections agent
Bureau of General Services (BGS);

1.1.2 Review the responsibilities of each party;

1.1.3 Review any previously-identified special provisions of the Project;

1.1.4 Review the Schedule of the Work calendar submitted by the Contractor to be approved by the Owner and Consultant;

1.1.5 Review the Schedule of Values form submitted by the Contractor to be approved by the Owner and Consultant;

1.1.6 Establish routines for Shop Drawing approval, contract changes, requisitions, et cetera;

1.1.7 discuss jobsite issues;

1.1.8 Discuss Project close-out procedures;

1.1.9 Provide an opportunity for clarification of Contract Documents before work begins; and

1.1.10 Schedule regular meetings at appropriate intervals for the review of the progress of the Work.

2. Intent and Correlation of Contract Documents

2.1 The intent of the Contract Documents is to describe the complete Project. The Contract Documents consist of various components; each component complements the others. What is shown as a requirement by any one component shall be inferred as a requirement on all corresponding components.

2.2 The Contractor shall furnish all labor, equipment and materials, tools, transportation, insurance, services, supplies, operations and methods necessary for, and reasonably incidental to, the construction and completion of the Project. Any work that deviates from the Contract Documents which appears to be required by the exigencies of construction or by inconsistencies in the Contract Documents, will be determined by the Consultant and authorized in writing by the Consultant, Owner and the Bureau prior to execution. The Contractor shall be responsible for requesting clarifying information where the intent of the Contract Documents is uncertain.

2.3 The Contractor shall not utilize any apparent error or omission in the Contract Documents to the disadvantage of the Owner. The Contractor shall promptly notify the Consultant in writing of such errors or omissions. The Consultant shall make any corrections or clarifications necessary in such a situation to document the true intent of the Contract Documents.

3. Additional Drawings and Specifications

3.1 Upon the written request of the Contractor, the Owner shall provide, at no expense to the Contractor, up to five sets of printed Drawings and Specifications for the execution of the Work.

3.2 The Consultant shall promptly furnish to the Contractor revised Drawings and Specifications, for the area of the documents where those revisions apply, when corrections or clarifications are made by the Consultant. All such information shall be consistent with, and reasonably inferred from, the Contract Documents. The Contractor shall do no work without the proper Drawings and Specifications.

4. Ownership of Contract Documents

4.1 The designs represented on the Contract Documents are the property of the Consultant. The Drawings and Specifications shall not be used on other work without consent of the Consultant.

5. Permits, Laws, and Regulations

5.1 The Owner is responsible for obtaining any zoning approvals or other similar local project approvals necessary to complete the Work, unless otherwise specified in the Contract Documents.

5.2 The Owner is responsible for obtaining Maine Department of Environmental Protection, Maine Department of Transportation, or other similar state government project approvals necessary to complete the Work, unless otherwise indicated in the Contract Documents.

5.3 The Owner is responsible for obtaining any federal agency project approvals necessary to complete the Work, unless otherwise indicated in the Contract Documents.

5.4 The Owner is responsible for obtaining all easements for permanent structures or permanent changes in existing facilities.

5.5 The Contractor is responsible for obtaining and paying for all permits and licenses necessary for the implementation of the Work. The Contractor shall notify the Owner of any delays, variance or restrictions that may result from the issuing of permits and licenses.

5.6 The Contractor shall comply with all ordinances, laws, rules and regulations and make all required notices bearing on the implementation of the Work. In the event the Contractor observes disagreement between the Drawings and Specifications and any ordinances, laws, rules and regulations, the Contractor shall promptly notify the Consultant in writing. Any necessary changes shall be made as provided in the contract for changes in the work. The Contractor shall not perform any work knowing it to be contrary to such ordinances, laws, rules and regulations.

5.7 The Contractor shall comply with local, state and federal regulations regarding construction safety and all other aspects of the Work.

5.8 The Contractor shall comply with the Maine Code of Fair Practices and Affirmative Action, 5 M.R.S. §784 (2).

6. Taxes

6.1 The Owner is exempt from the payment of Maine State sales and use taxes as provided in 36 M.R.S. §1760 (1). The Contractor and Subcontractors shall not include taxes on exempt items in the construction contract.

6.2 Section 1760 further provides in subsection 61 that sales to a construction contractor or its subcontractor of tangible personal property that is to be physically incorporated in, and become a permanent part of, real property for sale to or owned by the Owner, are exempt from Maine State sales and use taxes. Tangible personal property is defined in 36 M.R.S. §1752 (17).

6.3 The Contractor may contact Maine Revenue Services, 24 State House Station, Augusta, Maine 04333 for guidance on tax exempt regulations authorized by 36 M.R.S. §1760 and detailed in Rule 302 (18-125 CMR 302).

7. Labor and Wages

7.1 The Contractor shall conform to the labor laws of the State of Maine, and all other laws, ordinances, and legal requirements affecting the work in Maine.

7.2 The Consultant shall include a wage determination document prepared by the Maine Department of Labor in the Contract Documents for state-funded contracts in excess of $50,000. The document shows the minimum wages required to be paid to each category of labor employed on the project.

7.3 On projects requiring a Maine wage determination, the Contractor shall submit monthly payroll records to the Owner ("the contracting agency") showing the name and occupation of all workers and all independent contractors employed on the project. The monthly submission must also include the Contractor's company name, the title of the project, hours worked, hourly rate or other method of remuneration, and the actual wages or other compensation paid to each person.

7.4 The Contractor shall not reveal, in the payroll records submitted to the Owner, personal information regarding workers and independent contractors, other than the information described above. Such information shall not include Social Security number, employee identification number, or employee address or phone number, for example.

7.5 The Contractor shall conform to Maine statute (39-A M.R.S. §105-A (6)) by providing to the Workers' Compensation Board a list of all subcontractors and independent contractors on the job site and a record of the entity to whom that subcontractor or independent contractor is directly contracted and by whom that subcontractor or independent contractor is insured for workers' compensation purposes.

7.6 The Contractor shall enforce strict discipline and good order among their employees at all times, and shall not employ any person unfit or unskilled to do the work assigned to them.

7.7 The Contractor shall promptly pay all employees when their compensation is due, shall promptly pay all others who have billed and are due for materials, supplies and services used in the Work, and shall promptly pay all others who have billed and are due for insurance, workers compensation coverage, federal and state unemployment compensation, and Social Security

charges pertaining to this Project. Before final payments are made, the Contractor shall furnish to the Owner affidavits that all such payments described above have been made.

7.8 The Contractor may contact the Maine Department of Labor, 54 State House Station, Augusta, Maine 04333 for guidance on labor issues.

7.9 The Contractor may contact the Maine Workers' Compensation Board, 27 State House Station, Augusta, Maine 04333 for guidance on workers' compensation issues.

8. Indemnification

8.1 The Contractor shall indemnify and hold harmless the Owner and its officers and employees from and against any and all damages, liabilities, and costs, including reasonable attorney's fees, and defense costs, for any and all injuries to persons or property, including claims for violation of intellectual property rights, to the extent caused by the negligent acts or omissions of the Contractor, its employees, agents, officers or subcontractors in the performance of work under this Agreement. The Contractor shall not be liable for claims to the extent caused by the negligent acts or omissions of the Owner or for actions taken in reasonable reliance on written instructions of the Owner.

8.2 The Contractor shall notify the Owner promptly of all claims arising out of the performance of work under this Agreement by the Contractor, its employees or agents, officers or subcontractors.

8.3 This indemnity provision shall survive the termination of the Agreement, completion of the project or the expiration of the term of the Agreement.

9. Insurance Requirements

9.1 The Contractor shall provide, with each original of the signed Contract, an insurance certificate or certificates acceptable to the Owner and BGS. The Contractor shall submit insurance certificates to the Owner and BGS at the commencement of this Contract and at policy renewal or revision dates. The certificates shall identify the project name and BGS project number, and shall name the Owner as certificate holder and as additional insured for general liability and automobile liability coverages. The submitted forms shall contain a provision that coverage afforded under the insurance policies will not be canceled or materially changed unless at least ten days prior written notice by registered letter has been given to the Owner and BGS.

9.2 The Owner does not warrant or represent that the insurance required herein constitutes an insurance portfolio which adequately addresses all risks faced by the Contractor or its Subcontractors. The Contractor is responsible for the existence, extent and adequacy of insurance prior to commencement of work. The Contractor shall not allow any Subcontractor to commence work until all similar insurance required of the Subcontractor has been confirmed by the Contractor.

9.3 The Contractor shall procure and maintain primary insurance for the duration of the Project and, if written on a Claims-Made basis, shall also procure and maintain Extended Reporting Period (ERP) insurance for the period of time that any claims could be brought. The Contractor shall ensure that all Subcontractors they engage or employ will procure and maintain similar insurance

in form and amount acceptable to the Owner and BGS. At a minimum, the insurance shall be of the types and limits set forth herein protecting the Contractor from claims which may result from the Contractor's execution of the Work, whether such execution be by the Contractor or by those employed by the Contractor or by those for whose acts they may be liable. All required insurance coverages shall be placed with carriers authorized to conduct business in the State of Maine by the Maine Bureau of Insurance.

9.3.1 The Contractor shall have Workers' Compensation insurance for all employees on the Project site in accordance with the requirements of the Workers' Compensation law of the State of Maine. Minimum acceptable limits for Employer's Liability are:

Bodily Injury by Accident.....$500,000
Bodily Injury by Disease.....$500,000 Each Employee
Bodily Injury by Disease.....$500,000 Policy Limit

9.3.2 The Contractor shall have Commercial General Liability insurance providing coverage for bodily injury and property damage liability for all hazards of the Project including premise and operations, products and completed operations, contractual, and personal injury liabilities. The policy shall include collapse and underground coverage as well as explosion coverage if explosion hazards exist. Aggregate limits shall apply on a location or project basis. Minimum acceptable limits are:

General aggregate limit.....$2,000,000
Products and completed operations aggregate $1,000,000
Each occurrence limit.....$1,000,000
Personal injury aggregate.....$1,000,000

9.3.3 The Contractor shall have Automobile Liability insurance against claims for bodily injury, death or property damage resulting from the maintenance, ownership or use of all owned, non-owned and hired automobiles, trucks and trailers. Minimum acceptable limit is:

Any one accident or loss $500,000

9.3.4 The Contractor shall have Owner's Protective Liability insurance for contract values $50,000 and above, naming the Owner as the Named Insured. Minimum acceptable limits are:

General aggregate limit.....$2,000,000
Each occurrence limit.....$1,000,000

9.4 The Owner has determined the appropriate coverage for this particular project, verified the coverage with the State of Maine Division of Risk Management, and selected the proper option on the contract form. Property Insurance for this construction contract shall be one of the options described below.

9.4.1 Non-standard project insured by the Contractor –
Projects of this type include, but are not limited to, site improvements such as parking lots, boat launches, utility runs, and free-standing mechanical or electrical equipment, and do not necessarily include buildings. The Contractor shall procure and maintain an appropriate level of property insurance naming the Owner, Contractor and any Subcontractors as insureds as their interest may appear. Covered cause of loss form shall be all Risks of Direct Physical Loss, endorsed to include flood, earthquake, transit and sprinkler leakage where sprinkler coverage is applicable. Unless specifically authorized in writing by the Owner, the limit of insurance shall not be less than the initial contract amount and coverage shall apply during the entire contract period until the Certificate of Substantial Completion is accepted by the Owner.

9.4.2 New construction insured by the Contractor –
The Contractor shall procure and maintain Builder's Risk insurance naming the Owner, Contractor and any Subcontractors as insureds as their interest may appear. Covered cause of loss form shall be all Risks of Direct Physical Loss, endorsed to include flood, earthquake, transit and sprinkler leakage where sprinkler coverage is applicable. Unless specifically authorized in writing by the Owner, the limit of insurance shall not be less than the initial contract amount and coverage shall apply during the entire contract period until the Certificate of Substantial Completion is accepted by the Owner.

9.4.3 Renovations and additions to existing State-owned buildings insured by the Owner (State of Maine Division of Risk Management) –
Builder's Risk insurance will be provided by the State of Maine in accordance with the terms and conditions of the State's property policy. The Owner shall notify Maine Division of Risk Management concerning the project, including the nature and value of the work, planned start and completion date, and the name of the General Contractor. Said insurance coverage shall cover the interests of the Contractor and Subcontractor, as their interests may appear. Exclusions common to commercial property policies may be applicable. A Builder's Risk certificate of insurance will be furnished to the Contractor upon request.

The $500 per occurrence deductible is the responsibility of the Contractor. Should the Contractor or Subcontractor desire coverage in excess of that maintained by the State, it must be acquired by the Contractor and at Contractor expense.

9.4.4 Renovations and additions to existing buildings *not* insured by the Owner (State of Maine Division of Risk Management) –
The Contractor shall procure and maintain Builder's Risk insurance naming the Owner, Contractor and all Subcontractors as insureds as their interests may appear. The covered cause of loss form shall be Risks of Direct Physical Loss, endorsed to include flood, earthquake, testing and ensuing loss and shall include coverage for materials in transit and materials stored off site. Coverage shall be on a replacement cost and a completed value basis. Unless specifically authorized by the Owner, the limit of insurance shall not be less than the contract amount and coverage shall apply during the entire contract period until the Certificate of Substantial Completion is accepted by the Owner.

10. Contract Bonds

10.1 When noted as required in the Bid Documents, the Contractor shall provide to the Owner a Performance Bond and a Payment Bond, or "contract bonds", upon execution of the contract. Each bond value shall be for the full amount of the contract and issued by a surety company authorized to do business in the State of Maine as approved by the Owner. The bonds shall be executed on the forms furnished in the Bid Documents. The bonds shall allow for any subsequent additions or deductions of the contract.

10.2 The contract bonds shall continue in effect for one year after final acceptance of the contract to protect the Owner's interest in connection with the one year guarantee of workmanship and materials and to assure settlement of claims for the payment of all bills for labor, materials and equipment by the Contractor.

11. Patents and Royalties

11.1 The Contractor shall, for all time, secure for the Owner the free and undisputed right to the use of any patented articles or methods used in the Work. The expense of defending any suits for infringement or alleged infringement of such patents shall be borne by the Contractor. Awards made regarding patent suits shall be paid by the Contractor. The Contractor shall hold the Owner harmless regarding patent suits that may arise due to installations made by the Contractor, and to any awards made as a result of such suits.

11.2 Any royalty payments related to the work done by the Contractor for the Project shall be borne by the Contractor. The Contractor shall hold the Owner harmless regarding any royalty payments that may arise due to installations made by the Contractor.

12. Surveys, Layout of Work

12.1 The Owner shall furnish all property surveys unless otherwise specified.

12.2 The Contractor is responsible for correctly staking out the Work on the site. The Contractor shall employ a competent surveyor to position all construction on the site. The surveyor shall run the axis lines, establish correct datum points and check each line and point on the site to insure their accuracy. All such lines and points shall be carefully preserved throughout the construction.

12.3 The Contractor shall lay out all work from dimensions given on the Drawings. The Contractor shall take measurements and verify dimensions of any existing work that affects the Work or to which the Work is to be fitted. The Contractor is solely responsible for the accuracy of all measurements. The Contractor shall verify all grades, lines, levels, elevations and dimensions shown on the Drawings and report any errors or inconsistencies to the Consultant prior to commencing work.

13. Record of Documents

13.1 The Contractor shall maintain one complete set of Contract Documents on the jobsite, in good order and current status, for access by the Owner and Consultant.

13.2 The Contractor shall maintain, continuously updated, complete records of Requests for Information, Architectural Supplemental Instructions (or equivalent), Information Bulletins, supplemental sketches, Change Order Proposals, Change Orders, Shop Drawings, testing reports, et cetera, for access by the Owner and Consultant.

14. Allowances

14.1 The Contract Price shall include all allowances described in the Contract Documents. The Contractor shall include all overhead and profit necessary to implement each allowance in their Contract Price.

14.2 The Contractor shall not be required to employ parties for allowance work against whom the Contractor has a reasonable objection. In such a case, the Contractor shall notify the Owner in writing of their position and shall propose an alternative party to complete the work of the allowance.

15. Shop Drawings

15.1 The Contractor shall administer Shop Drawings prepared by the Contractor, Subcontractors, suppliers or others to conform to the approved Schedule of the Work. The Contractor shall verify all field measurements, check and authorize all Shop Drawings and schedules required by the Work. The Contractor is the responsible party and contact for the Contractor's work as well as that of Subcontractors, suppliers or others who provide Shop Drawings.

15.2 The Consultant shall review and acknowledge Shop Drawings, with reasonable promptness, for general conformity with the design concept of the project and compliance with the information provided in the Contract Documents.

15.3 The Contractor shall provide monthly updated logs containing: requests for information, information bulletins, supplemental instructions, supplemental sketches, change order proposals, change orders, submittals, testing and deficiencies.

15.4 The Contractor shall make any corrections required by the Consultant, and shall submit a quantity of corrected copies as may be needed. The acceptance of Shop Drawings or schedules by the Consultant shall not relieve the Contractor from responsibility for deviations from Drawings and Specifications, unless the Contractor has called such deviations to the attention of the Consultant at the time of submission and secured the Consultant’s written approval. The acceptance of Shop Drawings or schedules by the Consultant does not relieve the Contractor from responsibility for errors in Shop Drawings or schedules.

16. Samples

16.1 The Contractor shall furnish for approval, with reasonable promptness, all samples as directed by the Consultant. The Consultant shall review and approve such samples, with reasonable promptness, for general conformity with the design concept of the project and compliance with the information provided in the Contract Documents. The subsequent work shall be in accord with the approved samples.

17. Substitutions

17.1 The Contractor shall furnish items and materials described in the Contract Documents. If the item or material specified describes a proprietary product, or uses the name of a manufacturer, the term “or approved equal” shall be implied, if it is not included in the text. The specific item or material specified establishes a minimum standard for the general design, level of quality, type, function, durability, efficiency, reliability, compatibility, warranty coverage, installation factors and required maintenance. The Drawing or written Specification shall not be construed to exclude other manufacturers products of comparable design, quality, and efficiency.

17.2 The Contractor may submit detailed information about a proposed substitution to the Consultant for consideration. Particular models of items and particular materials which the Contractor asserts to be equal to the items and materials identified in the Contract Documents shall be allowed only with written approval by the Consultant. The request for substitution shall include a cost comparison and a reason or reasons for the substitution.

17.3 The Consultant may request additional information about the proposed substitution. The approval or rejection of a proposed substitution may be based on timeliness of the request, source

of the information, the considerations of minimum standards described above, or other considerations. The Consultant should briefly state the rationale for the decision. The decision shall be considered final.

17.4 The duration of a substitution review process can not be the basis for a claim for delay in the Schedule of the Work.

18. Assignment of Contract

18.1 The Contractor shall not assign or sublet the contract as a whole without the written consent of the Owner. The Contractor shall not assign any money due to the Contractor without the written consent of the Owner.

19. Separate Contracts

19.1 The Owner reserves the right to create other contracts in connection with this Project using similar General Conditions. The Contractor shall allow the Owner's other contractors reasonable opportunity for the delivery and storage of materials and the execution of their work. The Contractor shall coordinate and properly connect the Work of all contractors.

19.2 The Contractor shall promptly report to the Consultant and Owner any apparent deficiencies in work of the Owner's other contractors that impacts the proper execution or results of the Contractor. The Contractor’s failure to observe or report any deficiencies constitutes an acceptance of the Owner's other contractors work as suitable for the interface of the Contractor’s work, except for latent deficiencies in the Owner's other contractors work.

19.3 Similarly, the Contractor shall promptly report to the Consultant and Owner any apparent deficiencies in their own work that would impact the proper execution or results of the Owner's other contractors.

19.4 The Contractor shall report to the Consultant and Owner any conflicts or claims for damages with the Owner's other contractors and settle such conflicts or claims for damages by mutual agreement or arbitration, if necessary, at no expense to the Owner.

19.5 In the event the Owner's other contractors sue the Owner regarding any damage alleged to have been caused by the Contractor, the Owner shall notify the Contractor, who shall defend such proceedings at the Contractor's expense. The Contractor shall pay or satisfy any judgment that may arise against the Owner, and pay all other costs incurred.

20. Subcontracts

20.1 The Contractor shall not subcontract any part of this contract without the written permission of the Owner.

20.2 The Contractor shall submit a complete list of named Subcontractors and material suppliers to the Consultant and Owner for approval by the Owner prior to commencing work. The Subcontractors named shall be reputable companies of recognized standing with a record of satisfactory work.

20.3 The Contractor shall not employ any Subcontractor or use any material until they have been approved, or where there is reason to believe the resulting work will not comply with the Contract Documents.

20.4 The Contractor, not the Owner, is as fully responsible for the acts and omissions of Subcontractors and of persons employed by them, as the Contractor is for the acts and omissions of persons directly or indirectly employed by the Contractor.

20.5 Neither the Contract Documents nor any Contractor-Subcontractor contract shall indicate, infer or create any direct contractual relationship between any Subcontractor and the Owner.

21. Contractor-Subcontractor Relationship

21.1 The Contractor shall be bound to the Subcontractor by all the obligations in the Contract Documents that bind the Contractor to the Owner.

21.2 The Contractor shall pay the Subcontractor, in proportion to the dollar value of the work completed and requisitioned by the Subcontractor, the approved dollar amount allowed to the Contractor no more than seven days after receipt of payment from the Owner.

21.3 The Contractor shall pay the Subcontractor accordingly if the Contract Documents or the subcontract provide for earlier or larger payments than described in the provision above.

21.4 The Contractor shall pay the Subcontractor for completed and requisitioned subcontract work, less retainage, no more than seven days after receipt of payment from the Owner for the Contractor's approved Requisition for Payment, even if the Consultant fails to certify a portion of the Requisition for Payment for a cause not the fault of the Subcontractor.

21.5 The Contractor shall not make a claim for liquidated damages or penalty for delay in any amount in excess of amounts that are specified by the subcontract.

21.6 The Contractor shall not make a claim for services rendered or materials furnished by the Subcontractor unless written notice is given by the Contractor to the Subcontractor within ten calendar days of the day in which the claim originated.

21.7 The Contractor shall give the Subcontractor an opportunity to present and to submit evidence in any progress conference or disputes involving subcontract work.

21.8 The Contractor shall pay the Subcontractor a just share of any fire insurance payment received by the Contractor.

21.9 The Subcontractor shall be bound to the Contractor by the terms of the Contract Documents and assumes toward the Contractor all the obligations and responsibilities that the Contractor, by those documents, assumes toward the Owner.

21.10 The Subcontractor shall submit applications for payment to the Contractor in such reasonable time as to enable the Contractor to apply for payment as specified.

21.11 The Subcontractor shall make any claims for extra cost, extensions of time or damages, to the Contractor in the manner provided in these General Conditions for like claims by the Contractor to the Owner, except that the time for the Subcontractor to make claims for extra cost is seven calendar days after the receipt of Consultant's instructions.

22. Supervision of the Work

22.1 During all stages of the Work the Contractor shall have a competent superintendent, with any necessary assistant superintendents, overseeing the project. The superintendent shall not be reassigned without the consent of the Owner unless a superintendent ceases to be employed by the Contractor due to unsatisfactory performance.

22.2 The superintendent represents the Contractor on the jobsite. Directives given by the Consultant or Owner to the superintendent shall be as binding as if given directly to the Contractor's main office. All important directives shall be confirmed in writing to the Contractor. The Consultant and Owner are not responsible for the acts or omissions of the superintendent or assistant superintendents.

22.3 The Contractor shall provide supervision of the Work equal to the industry's highest standard of care. The superintendent shall carefully study and compare all Contract Documents and promptly report any error, inconsistency or omission discovered to the Consultant. The Contractor may not necessarily be held liable for damages resulting directly from any error, inconsistency or omission in the Contract Documents or other instructions by the Consultant that was not revealed by the superintendent in a timely way.

23. Observation of the Work

23.1 The Contractor shall allow the Owner, the Consultant and the Bureau continuous access to the site for the purpose of observation of the progress of the work. All necessary safeguards and accommodations for such observations shall be provided by the Contractor.

23.2 The Contractor shall coordinate all required testing, approval or demonstration of the Work. The Contractor shall give sufficient notice to the appropriate parties of readiness for testing, inspection or examination.

23.3 The Contractor shall schedule inspections and obtain all required certificates of inspection for inspections by a party other than the Consultant.

23.4 The Consultant shall make all scheduled observations promptly, prior to the work being concealed or buried by the Contractor. If approval of the Work is required of the Consultant, the Contractor shall notify the Consultant of the construction schedule in this regard. Work concealed or buried prior to the Consultant's approval may need to be uncovered at the Contractor’s expense.

23.5 The Consultant may order reexamination of questioned work, and, if so ordered, the work must be uncovered by the Contractor. If the work is found to conform to the Contract Documents, the Owner shall pay the expense of the reexamination and remedial work. If the work is found to not conform to the Contract Documents, the Contractor shall pay the expense, unless the defect in the

work was caused by the Owner's Contractor, whose responsibility the reexamination expense becomes.

23.6 The Bureau shall periodically observe the Work during the course of construction and make recommendations to the Contractor or Consultant as necessary. Such recommendations shall be considered and implemented through the usual means for changes to the Work.

24. Consultant's Status

24.1 The Consultant represents the Owner during the construction period, and observes the work in progress on behalf of the Owner. The Consultant has authority to act on behalf of the Owner only to the extent expressly provided by the Contract Documents or otherwise demonstrated to the Contractor. The Consultant has authority to stop the work whenever such an action is necessary, in the Consultant's reasonable opinion, to ensure the proper execution of the contract.

24.2 The Consultant is the interpreter of the conditions of the contract and the judge of its performance. The Consultant shall favor neither the Owner nor the Contractor, but shall use the Consultant’s powers under the contract to enforce faithful performance by both parties.

24.3 In the event of the termination of the Consultant's employment on the project prior to completion of the work, the Owner shall appoint a capable and reputable replacement. The status of the new Consultant relative to this contract shall be that of the former Consultant.

25. Management of the Premises

25.1 The Contractor shall place equipment and materials, and conduct activities on the premises in a manner that does not unreasonably hinder site circulation, environmental stability, or any long term effect. Likewise, the Consultant's directions shall not cause the use of premises to be impeded for the Contractor or Owner.

25.2 The Contractor shall not use the premises for any purpose other than that which is directly related to the scope of work. The Owner shall not use the premises for any purpose incompatible with the proposed work simultaneous to the work of the Contractor.

25.3 The Contractor shall enforce the Consultant’s instructions regarding information posted on the premises such as signage and advertisements, as well as activities conducted on the premises such as fires, and smoking.

25.4 The Owner may occupy any part of the Project that is completed with the written consent of the Contractor, and without prejudice to any of the rights of the Owner or Contractor. Such use or occupancy shall not, in and of itself, be construed as a final acceptance of any work or materials.

26. Safety and Security of the Premises

26.1 The Contractor shall designate, and make known to the Consultant and the Owner, a safety officer whose duty is the prevention of accidents on the site.

26.2 The Contractor shall continuously maintain security on the premises and protect from unreasonable occasion of injury all people authorized to be on the job site. The Contractor shall also effectively protect the property and adjacent properties from damage or loss.

26.3 The Contractor shall take all necessary precautions to ensure the safety of workers and others on and adjacent to the site, abiding by applicable local, state and federal safety regulations. The Contractor shall erect and continuously maintain safeguards for the protection of workers and others, and shall post signs and other warnings regarding hazards associated with the construction process, such as protruding fasteners, moving equipment, trenches and holes, scaffolding, window, door or stair openings, and falling materials.

26.4 The Contractor shall restore the premises to conditions that existed prior to the start of the project at areas not intended to be altered according to the Contract Documents.

26.5 The Contractor shall protect existing utilities and exercise care working in the vicinity of utilities shown in the Drawings and Specifications or otherwise located by the Contractor.

26.6 The Contractor shall protect from damage existing trees and other significant plantings and landscape features of the site which will remain a permanent part of the site. If necessary or indicated in the Contract Documents, tree trunks shall be boxed and barriers erected to prevent damage to tree branches or roots.

26.7 The Contractor shall repair or replace damage to the Work caused by the Contractor's or Subcontractor's forces, including that which is reasonably protected, at the expense of the responsible party.

26.8 The Contractor shall not load, or allow to be loaded, any part of the Project with a force which imperils personal or structural safety. The Consultant may consult with the Contractor on such means and methods of construction, however, the ultimate responsibility lies with the Contractor.

26.9 The Contractor shall not jeopardize any work in place with subsequent construction activities such as blasting, drilling, excavating, cutting, patching or altering work. The Consultant must approve altering any structural components of the project. The Contractor shall supervise all construction activities carried out by others on site to ensure that the work is neatly done and in a manner that will not endanger the structure or the component parts.

26.10 The Contractor may act with their sole discretion in emergency situations that potentially effect health, life or serious damage to the premises or adjacent properties, to prevent such potential loss or injury. The Contractor may negotiate with the Owner for compensation for expenses due to such emergency work.

26.11 The Contractor and Subcontractors shall have no responsibility for the identification, discovery, presence, handling, removal or disposal of, or exposure of persons to, hazardous materials in any form at the project site. The Contractor shall avoid disruption of any hazardous materials or toxic substances at the project site and promptly notify the Owner in writing on the occasion of such a discovery.

26.12 The Contractor shall keep the premises free of any unsafe accumulation of waste materials caused by the work. The Contractor shall regularly keep the spaces “broom clean”. See the Close-out of the Work provisions of this section regarding cleaning at the completion of the project.

27. Changes in the Work

27.1 The Contractor shall not proceed with extra work without an approved Change Order or Construction Change Directive. A Change Order which has been properly signed by all parties shall become a part of the contract.

27.2 A Change Order is the usual document for directing changes in the Work. In certain circumstances, however, the Owner may utilize a Construction Change Directive to direct the Contractor to perform changes in the Work that are generally consistent with the scope of the project. The Owner shall use a Construction Change Directive only when the normal process for approving changes to the Work has failed to the detriment of the Project, or when agreement on the terms of a Change Order cannot be met, or when an urgent situation requires, in the Owner's judgment, prompt action by the Contractor.

27.3 The Consultant shall prepare the Construction Change Directive representing a complete scope of work, with proposed Contract Price and Contract Time revisions, if any, clearly stated.

27.4 The Contractor shall promptly carry out a Construction Change Directive which has been signed by the Owner and the Consultant. Work thus completed by the Contractor constitutes the basis for a Change Order. Changes in the Contract Price and Contract Time shall be as defined in the Construction Change Directive unless subsequently negotiated with some other terms.

27.5 The method of determining the dollar value of extra work shall be by:
- .1 an estimate of the Contractor accepted by Owner as a lump sum, or
- .2 unit prices named in the contract or subsequently agreed upon, or
- .3 cost plus a designated percentage, or
- .4 cost plus a fixed fee.

27.6 The Contractor shall determine the dollar value of the extra work for both the lump sum and cost plus designated percentage methods so as not to exceed the following rates. The rates include all overhead and profit expenses.
- .1 Contractor - for any work performed by the Contractor’s own forces, up to 20% of the cost;
- .2 Subcontractor - for work performed by Subcontractor’s own forces, up to 20% of the cost;
- .3 Contractor - for work performed by Contractor’s Subcontractor, up to 10% of the amount due the Subcontractor.

27.7 The Contractor shall keep and provide records as needed or directed for the cost plus designated percentage method. The Consultant shall review and certify the appropriate amount which includes the Contractor's overhead and profit. The Owner shall make payments based on the Consultant’s certificate.

27.8 Cost reflected in Change Orders shall be limited to the following: cost of materials, cost of delivery, cost of labor (including Social Security, pension, Workers' Compensation insurance, and unemployment insurance), and cost of rental of power tools and equipment. Labor cost may

include a pro-ratio share of a foreman's time only in the case of an extension of contract time granted due to the Change Order.

27.9 Overhead reflected in Change Orders shall be limited to the following: bond premium, supervision, wages of clerks, time keepers, and watchmen, small tools, incidental expenses, general office expenses, and all other overhead expenses directly related to the Change Order.

27.10 The Contractor shall provide credit to the Owner for labor, materials, equipment and other costs but not overhead and profit expenses for those Change Order items that result in a net value of credit to the contract.

27.11 The Owner may change the scope of work of the Project without invalidating the contract. The Owner shall notify the Contractor of a change of the scope of work for the Owner's Contractors, which may affect the work of this Contractor, without invalidating the contract. Change Orders for extension of the time caused by such changes shall be developed at the time of directing the change in scope of work.

27.12 The Consultant may order minor changes in the Work, not involving extra cost, which is consistent with the intent of the design or project.

27.13 The Contractor shall immediately give written notification to the Consultant of latent conditions discovered at the site which materially differ from those represented in the Drawings or Specifications, and which may eventually result in a change in the scope of work. The Contractor shall suspend work until receiving direction from the Consultant. The Consultant shall promptly investigate the conditions and respond to the Contractor's notice with direction that avoids any unnecessary delay of the Work. The Consultant shall determine if the discovered conditions warrant a Change Order.

27.14 The Contractor shall, within ten calendar days of receipt of the information, give written notification to the Consultant if the Contractor claims that instructions by the Consultant will constitute extra cost not accounted for by Change Order or otherwise under the contract. The Consultant shall promptly respond to the Contractor's notice with direction that avoids any unnecessary delay of the Work. The Consultant shall determine if the Contractor's claim warrants a Change Order.

28. Correction of the Work

28.1 The Contractor shall promptly remove from the premises all work the Consultant declares is non-conforming to the contract. The Contractor shall replace the work properly at no expense to the Owner. The Contractor is also responsible for the expenses of others whose work was damaged or destroyed by such remedial work.

28.2 The Owner may elect to remove non-conforming work if it is not removed by the Contractor within a reasonable time, that time defined in a written notice from the Consultant. The Owner may elect to store removed non-conforming work not removed by the Contractor at the Contractor's expense. The Owner may, with ten days written notice, dispose of materials which the Contractor does not remove. The Owner may sell the materials and apply the net proceeds, after deducting all expenses, to the costs that should have been borne by the Contractor.

28.3 The Contractor shall remedy any defects due to faulty materials or workmanship and pay for any related damage to other work which appears within a period of one year from the date of substantial completion, and in accord with the terms of any guarantees provided in the contract. The Owner shall promptly give notice of observed defects to the Contractor and Consultant. The Consultant shall determine the status of all claimed defects. The Contractor shall perform all remedial work without unjustifiable delay in either the initial response or the corrective action.

28.4 The Consultant may authorize, after a reasonable notification to the Contractor, an equitable deduction from the contract amount in lieu of the Contractor correcting non-conforming or defective work.

29. Owner's Right to do Work

29.1 The Owner may, using other contractors, correct deficiencies attributable to the Contractor, or complete unfinished work. Such action shall take place only after giving the Contractor three days written notice, and provided the Consultant approves of the proposed course of action as an appropriate remedy. The Owner may then deduct the cost of the remedial work from the amount due the Contractor.

29.2 The Owner may act with their sole discretion when the Contractor is unable to take action in emergency situations that potentially effect health, life or serious damage to the premises or adjacent properties, to prevent such potential loss or injury. The Owner shall inform the Contractor of the emergency work performed, particularly where it may affect the work of the Contractor.

30. Termination of Contract and Stop Work Action

30.1 The Owner may, owing to a certificate of the Consultant indicating that sufficient cause exists to justify such action, without prejudice to any other right or remedy and after giving the Contractor and the Contractor’s surety seven days written notice, terminate the employment of the Contractor. At that time the Owner may take possession of the premises and of all materials, tools and appliances on the premises and finish the work by whatever method the Owner may deem expedient. Cause for such action by the Owner includes:

- .1 the contractor is adjudged bankrupt, or makes a general assignment for the benefit of its creditors, or
- .2 a receiver is appointed due to the Contractor’s insolvency, or
- .3 the Contractor persistently or repeatedly refuses or fails to provide enough properly skilled workers or proper materials, or
- .4 the Contractor fails to make prompt payment to Subcontractors or suppliers of materials or labor, or
- .5 the Contractor persistently disregards laws, ordinances or the instructions of the Consultant, or is otherwise found guilty of a substantial violation of a provision of the Contract Documents.

30.2 The Contractor is not entitled, as a consequence of the termination of the employment of the Contractor as described above, to receive any further payment until the Work is finished. If the unpaid balance of the contract amount exceeds the expense of finishing the Work, including compensation for additional architectural, managerial and administrative services, such balance

shall be paid to the Contractor. If the expense of finishing the Work exceeds the unpaid balance, the Contractor shall pay the difference to the Owner. The Consultant shall certify the expense incurred by the Contractor's default. This obligation for payment shall continue to exist after termination of the contract.

30.3 The Contractor may, if the Work is stopped by order of any court or other public authority for a period of thirty consecutive days, and through no act or fault of the Contractor or of anyone employed by the Contractor, with seven days written notice to the Owner and the Consultant, terminate this contract. The Contractor may then recover from the Owner payment for all work executed, any proven loss and reasonable profit and damage.

30.4 The Contractor may, if the Consultant fails to issue a certificate for payment within seven days after the Contractor's formal request for payment, through no fault of the Contractor, or if the Owner fails to pay to the Contractor within 30 days after submission of any sum certified by the Consultant, with seven days written notice to the Owner and the Consultant, stop the Work or terminate this Contract.

31. Delays and Extension of Time

31.1 The completion date of the contract shall be extended if the work is delayed by changes ordered in the work which have approved time extensions, or by an act or neglect of the Owner, the Consultant, or the Owner's Contractor, or by strikes, lockouts, fire, flooding, unusual delay in transportation, unavoidable casualties, or by other causes beyond the Contractor's control. The Consultant shall determine the status of all claimed causes.

31.2 The contract shall not be extended for delay occurring more than seven calendar days before the Contractor's claim made in writing to the Consultant. In case of a continuing cause of delay, only one claim is necessary.

31.3 The contract shall not be extended due to failure of the Consultant to furnish drawings if no schedule or agreement is made between the Contractor and the Consultant indicating the dates which drawings shall be furnished and fourteen calendar days has passed after said date for such drawings.

31.4 This article does not exclude the recovery of damages for delay by either party under other provisions in the Contract Document.

32. Payments to the Contractor

32.1 As noted under *Preconstruction Conference* in this section, the Contractor shall submit a Schedule of Values form, before the first application for payment, for approval by the Owner and Consultant. The Consultant may direct the Contractor to provide evidence that supports the correctness of the form. The approved Schedule of Values shall be used as a basis for payments.

32.2 The Contractor shall submit an application for each payment ("Requisition for Payment") on a form approved by the Owner and Consultant. The Consultant may require receipts or other documents showing the Contractor's payments for materials and labor, including payments to Subcontractors.

32.3 The Contractor shall submit Requisitions for Payment as the work progresses not more frequently than once each month, unless the Owner approves a more frequent interval due to unusual circumstances. The Requisition for Payment is based on the proportionate quantities of the various classes of work completed or incorporated in the Work, in agreement with the actual progress of the Work and the dollar value indicated in the Schedule of Values.

32.4 The Consultant shall verify and certify each Requisition for Payment which appears to be complete and correct prior to payment being made by the Owner. The Consultant may certify an appropriate amount for materials not incorporated in the Work which have been delivered and suitably stored at the site. The Contractor shall submit bills of sale, insurance certificates, or other such documents that will adequately protect the Owner's interests prior to payments being certified.

32.5 In the event any materials delivered but not yet incorporated in the Work have been included in a certified Requisition for Payment with payment made, and said materials thereafter are damaged, deteriorated or destroyed, or for any reason whatsoever become unsuitable or unavailable for use in the Work, the full amount previously allowed shall be deducted from subsequent payments unless the Contractor satisfactorily replaces said material.

32.6 The Contractor may request certification of an appropriate dollar amount for materials not incorporated in the Work which have been delivered and suitably stored away from the site. The Contractor shall submit bills of sale, insurance certificates, right-of-entry documents or other such documents that will adequately protect the Owner's interests. The Consultant shall determine if the Contractor's documentation for the materials is complete and specifically designated for the Project. The Owner may allow certification of such payments.

32.7 Subcontractors may request, and shall receive from the Consultant, copies of approved Requisitions for Payment showing the amounts certified in the Schedule of Values.

32.8 Certified Requisitions for Payment, payments made to the Contractor, or partial or entire occupancy of the project by the Owner shall not constitute an acceptance of any work that does not conform to the Contract Documents. The making and acceptance of the final payment constitutes a waiver of all claims by the Owner, other than those arising from unsettled liens, from faulty work or materials appearing within one year from final payment or from requirements of the Drawings and Specifications, and of all claims by the Contractor, except those previously made and still unsettled.

33. Payments Withheld

33.1 The Owner shall retain five percent of each payment due the Contractor as part security for the fulfillment of the contract by the Contractor. The Owner may make payment of a portion of this "retainage" to the Contractor temporarily or permanently during the progress of the Work. The Owner may thereafter withhold further payments until the full amount of the five percent is reestablished. The Contractor may deposit with the Maine State Treasurer certain securities in place of retainage amounts due according to Maine Statute (5 M.R.S. §1746).

33.2 The Consultant may withhold or nullify the whole or a portion of any Requisitions for Payment submitted by the Contractor in the amount that may be necessary, in his reasonable opinion, to protect the Owner from loss due to any of the following:

.1 defective work not remedied;
.2 claims filed or reasonable evidence indicating probable filing of claims;
.3 failure to make payments properly to Subcontractors or suppliers;
.4 a reasonable doubt that the contract can be completed for the balance then unpaid;
.5 liability for damage to another contractor.

The Owner shall make payment to the Contractor, in the amount withheld, when the above circumstances are removed.

34. Liens

34.1 The Contractor shall deliver to the Owner a complete release of all liens arising out of this contract before the final payment or any part of the retainage payment is released. The Contractor shall provide with the release of liens an affidavit asserting each release includes all labor and materials for which a lien could be filed. Alternately, the Contractor, in the event any Subcontractor or supplier refuses to furnish a release of lien in full, may furnish a bond satisfactory to the Owner, to indemnify the Owner against any lien.

34.2 In the event any lien remains unsatisfied after all payments to the Contractor are made by the Owner, the Contractor shall refund to the Owner all money that the latter may be compelled to pay in discharging such lien, including all cost and reasonable attorney’s fees.

35. Workmanship

35.1 The Contractor shall provide materials, equipment, and installed work equal to or better than the quality specified in the Contract Documents and approved in submittal and sample. The installation methods shall be of the highest standards, and the best obtainable from the respective trades. The Consultant’s decision on the quality of work shall be final.

35.2 The Contractor shall know local labor conditions for skilled and unskilled labor in order to apply the labor appropriately to the Work. All labor shall be performed by individuals well skilled in their respective trades.

35.3 The Contractor shall perform all cutting, fitting, patching and placing of work in such a manner to allow subsequent work to fit properly, whether that be by the Contractor, the Owner's Contractors or others. The Owner and Consultant may advise the Contractor regarding such subsequent work. Notwithstanding the notification or knowledge of such subsequent work, the Contractor may be directed to comply with this standard of compatible construction by the Consultant at the Contractor's expense.

35.4 The Contractor shall request clarification or revision of any design work by the Consultant, prior to commencing that work, in a circumstance where the Contractor believes the work cannot feasibly be completed at the highest quality, or as indicated in the Contract Documents. The Consultant shall respond to such requests in a timely way, providing clarifying information, a feasible revision, or instruction allowing a reduced quality of work. The Contractor shall follow the direction of the Consultant regarding the required request for information.

35.5 The Contractor shall guarantee the Work against any defects in workmanship and materials for a period of one year commencing with the date of the Certificate of Substantial Completion, unless specified otherwise for specific elements of the project. The Work may also be subdivided in mutually agreed upon components, each defined by a separate Certificate of Substantial Completion.

36. Close-out of the Work

36.1 The Contractor shall remove from the premises all waste materials caused by the work. The Contractor shall make the spaces “broom clean” unless a more thorough cleaning is specified. The Contractor shall clean all windows and glass immediately prior to the final inspection, unless otherwise directed.

36.2 The Owner may conduct the cleaning of the premises where the Contractor, duly notified by the Consultant, fails to adequately complete the task. The expense of this cleaning may be deducted from the sum due to the Contractor.

36.3 The Contractor shall participate in all final inspections and acknowledge the documentation of unsatisfactory work, customarily called the "punch list", to be corrected by the Contractor. The Consultant shall document the successful completion of the Work in a dated Certificate of Substantial Completion, to be signed by Owner, Consultant, and Contractor.

36.4 The Contractor shall not call for final inspection of any portion of the Work that is not completely and permanently installed. The Contractor may be found liable for the expenses of individuals called to final inspection meetings prematurely.

36.5 The Contractor and all major Subcontractors shall participate in the end-of-warranty-period conference, typically scheduled close to one year after the Substantial Completion date.

37. Date of Completion and Liquidated Damages

37.1 The Contractor may make a written request to the Owner for an extension or reduction of time, if necessary. The request shall include the reasons the Contractor believes justifies the proposed completion date. The Owner may grant the revision of the contract completion date if the Work was delayed due to conditions beyond the control and the responsibility of the Contractor. The Contractor shall not conduct unauthorized accelerated work or file delay claims to recover alleged damages for unauthorized early completion.

37.2 The Contractor shall vigorously pursue the completion of the Work and notify the Owner of any factors that have, may, or will affect the approved Schedule of the Work. The Contractor may be found responsible for expenses of the Owner or Consultant if the Contractor fails to make notification of project delays.

37.3 The Project is planned to be done in an orderly fashion which allows for an iterative submittal review process, construction administration including minor changes in the Work and some bad weather. The Contractor shall not file delay claims to recover alleged damages on work the Consultant determines has followed the expected rate of progress.

37.4 The Consultant shall prepare the Certificate of Substantial Completion which, when signed by the Owner and the Contractor, documents the date of Substantial Completion of the Work or a designated portion of the Work. The Owner shall not consider the issuance of a Certificate of Occupancy by an outside authority a prerequisite for Substantial Completion if the Certificate of Occupancy cannot be obtained due to factors beyond the Contractor's control.

37.5 Liquidated Damages may be deducted from the sum due to the Contractor for each calendar day that the Work remains uncompleted after the completion date specified in the Contract or an approved amended completion date. The dollar amount per day shall be calculated using the Schedule of Liquidated Damages table shown below.

If the original contract amount is:	The per day Liquidated Damages shall be:
Less than $100,000	$250
$100,000 to less than $2,000,000	$750
$2,000,000 to less than $10,000,000	$1,500
$10,000,000 and greater	$1,500 plus $250 for each $2,000,000 over $10,000,000

38. Dispute Resolution

38.1 Mediation

38.1.1 A dispute between the parties which arises under this Contract which cannot be resolved through informal negotiation, shall be submitted to a neutral mediator jointly selected by the parties.

38.1.2 Either party may file suit before or during mediation if the party, in good faith, deems it to be necessary to avoid losing the right to sue due to a statute of limitations. If suit is filed before good faith mediation efforts are completed, the party filing suit shall agree to stay all proceedings in the lawsuit pending completion of the mediation process, provided such stay is without prejudice.

38.1.3 In any mediation between the Owner and the Consultant, the Owner has the right to consolidate related claims between Owner and Contractor.

38.2 Arbitration

38.2.1 If the dispute is not resolved through mediation, the dispute shall be settled by arbitration. The arbitration shall be conducted before a panel of three arbitrators. Each party shall select one arbitrator; the third arbitrator shall be appointed by the arbitrators selected by the parties. The arbitration shall be conducted in accordance with the Maine Uniform Arbitration Act (MUAA), except as otherwise provided in this section.

38.2.2 The decision of the arbitrators shall be final and binding upon all parties. The decision may be entered in court as provided in the MUAA.

38.2.3 The costs of the arbitration, including the arbitrators' fees shall be borne equally by the parties to the arbitration, unless the arbitrator orders otherwise.

38.2.4 In any arbitration between the Owner and the Consultant, the Owner has the right to consolidate related claims between Owner and Contractor.

00 73 46 WAGE DETERMINATION SCHEDULE

PART 1- GENERAL

1.1 Related Documents

A. Drawings and general provisions of the Contract, including General and Supplementary Conditions and other Division 01 Specifications Sections, apply to this Section.

1.2 Summary

A. This Section includes the wage determination requirements for Contractors as issued by the State of Maine Department of Labor Bureau of Labor Standards or the United States Department of Labor.

1.3 Requirements

A. Conform to the wage determination schedule for this project by accessing the following website for the current Wage Determination Schedule applicable at the time of bid submission.

1. Contractor may get the prevailing **2021 B2 rates** at the following website:

https://www.maine.gov/labor/labor_stats/publications/wagerateconst/prevailingwage/index.shtml

PART 2 - PRODUCTS (not used)

PART 3 - EXECUTION (not used)

THIS DOCUMENT MUST BE CLEARLY POSTED AT ALL CONSTRUCTION SITES FUNDED IN PART WITH STATE FUNDS

State of Maine
Department of Labor
Bureau of Labor Standards
Augusta, Maine 04333-0045
Telephone (207) 623-7906

Wage Determination - In accordance with 26 MRS §1301 et. seq., this is a determination by the Bureau of Labor Standards, of the fair minimum wage rate to be paid to laborers and workers employed on the below titled project.

2020 Fair Minimum Wage Rates
Building 2 Kennebec County
(other than 1 or 2 family homes)

Occupation Title	Minimum Wage	Minimum Benefit	Total	Occupation Title	Minimum Wage	Minimum Benefit	Total
Asbestos/Lead Removal Worker	$24.00	$2.40	$26.40	Ironworker - Structural	$20.00	$1.96	$21.96
Boilermaker	$30.00	$10.86	$40.86	Laborers (Helpers & Tenders)	$16.00	$0.86	$16.86
Boom Truck (Truck Crane) Operator	$25.00	$4.94	$29.94	Laborer - Skilled	$18.88	$3.76	$22.64
Bricklayer	$25.84	$4.92	$30.76	Line Erector Power/Cable Splicer	$31.00	$3.42	$34.42
Carpenter	$24.00	$3.71	$27.71	Loader Operator - Front-End	$20.00	$3.12	$23.12
Carpenter - Acoustical	$19.75	$1.01	$20.76	Mechanic- Maintenance	$20.00	$1.98	$21.98
Carpenter - Rough	$20.00	$0.00	$20.00	Mechanic- Refrigeration	$26.06	$5.20	$31.26
Cement Mason/Finisher	$16.00	$4.04	$20.04	Millwright	$24.00	$10.37	$34.37
Communication Equip Installer	$27.52	$17.64	$45.16	Oil/Fuel Burner Servicer/Installer	$28.50	$8.01	$36.51
Crane Operator =>15 Tons)	$30.00	$7.76	$37.76	Painter	$16.50	$0.00	$16.50
Dry-Wall Applicator	$24.50	$0.00	$24.50	Paver Operator	$20.50	$0.44	$20.94
Dry-Wall Taper & Finisher	$25.01	$0.00	$25.01	Pipe/Steam/Sprinkler Fitter	$25.00	$3.70	$28.70
Electrician - Licensed	$28.00	$7.33	$35.33	Plumber (Licensed)	$27.00	$4.48	$31.48
Electrician Helper/Cable Puller	$17.00	$1.84	$18.84	Plumber Helper/Trainee	$19.00	$3.02	$22.02
Elevator Constructor/Installer	$59.47	$24.57	$84.04	Propane & Natural Gas Serv/ Inst	$27.00	$3.79	$30.79
Excavator Operator	$21.43	$4.13	$25.56	Roofer	$17.60	$1.67	$19.27
Fence Setter	$19.50	$4.44	$23.94	Sheet Metal Worker	$23.28	$5.01	$28.29
Flagger	$13.00	$0.00	$13.00	Sider	$18.00	$0.46	$18.46
Floor Layer	$20.00	$0.03	$20.03	Tile Setter	$22.00	$1.36	$23.36
Glazier	$18.00	$0.96	$18.96	Truck Driver - Light	$16.00	$0.44	$16.44
Heating (HVAC)	$27.00	$3.81	$30.81	Truck Driver - Medium	$19.00	$1.97	$20.97
Industrial Truck (Forklift) Operator	$27.42	$6.26	$33.68	Truck Driver - Heavy	$18.63	$0.98	$19.61
Insulation Installer	$20.50	$2.89	$23.39	Truck Driver - Tractor Trailer	$17.50	$0.94	$18.44
Ironworker - Ornamental	$26.00	$22.37	$48.37	Truck Driver – (Cement)	$17.25	$2.26	$19.51
Ironworker - Reinforcing	$29.45	$23.49	$52.94				

The Laborer classifications include a wide range of work duties. Therefore, if any specific occupation to be employed on this project is not listed in this determination, call the Bureau of Labor Standards at the above number for further clarification.

Welders are classified in the trade to which the welding is incidental.

Apprentices – The minimum wage rate for registered apprentices are those set forth in the standards and policies of the Maine State Apprenticeship and Training Council for approved apprenticeship programs.

Title 26 §1310 requires that a clearly legible statement of all fair minimum wage and benefits rates to be paid the several classes of laborers, workers and mechanics employed on the construction on the public work must be kept posted in a prominent and easily accessible place at the site by each contractor and subcontractor subject to sections 1304 to 1313.

Appeal – Any person affected by the determination of these rates may appeal to the Commissioner of Labor by filing a written notice with the Commissioner stating the specific grounds of the objection within ten (10) days from the filing of these rates.

A true copy

Attest: _____
Scott R. Cotnoir
Wage & Hour Director
Bureau of Labor Standards

Expiration Date: 12-31-2020

End of Section 00 73 46

Bureau of General Services
Division of Planning, Design & Construction

PRE-CONSTRUCTION CONFERENCE AGENDA

PROJECT NAME
DATE
LOCATION OF MEETING

A. Participants in the Project
- Owner (State agency or other contracting entity)
  - Owner's Representative
- Consultant (Architect or Engineer)
  - Subconsultants
  - Clerk-of-the-works
- General Contractor
  - Superintendent
  - Subcontractors
- Other State agencies
- Construction testing company
- Commissioning agent
- Special Inspections agent
- Bureau of General Services (BGS)

B. General Contractor's Role
- Contracts, bonds and insurance
- Project Schedule
- Schedule of Values
- List of Subcontractors and suppliers
- Progress schedules
- Submittal schedule
- Requests For Information
- Full time Superintendent
- Responsibility for Subcontractors
- Responsibility for coordination
- Record drawings
- Permits

C. Consultant's Role
- Authorized agent of Owner
- Directs administration of the Contract
- Interpreter of content of plans and specifications
- Issues clarifications or revisions as necessary
- Directs Changes to the Work
- Reviews test results with Subconsultants
- Reviews shop drawings

D. Clerks' Role
- Authorized agent of the Consultant
- Observes construction of all phases of work
- Monitors progress against Contractors schedule
- Maintains project diary and daily reports of work and workforce
- Maintains record of changes

E. Owner's Role
- Clearly communicate intent and details of project
- Overall responsibility and accounting of funds
- Discuss and approve Change Orders in a timely manner

F. Owner's Representative Role
- Authorized agent of Owner
- Observes construction of all phases of work
- Monitors progress against Contractors schedule
- Maintains project diary and daily reports of work and workforce
- Maintains record of changes
- Orders and coordinates quality control testing

G. BGS Role
- Authorized agent of Owner
- Observes construction of all phases of work
- Monitors progress against Contractors schedule
- Monitors project diary and daily reports of work and workforce

H. General Issues
- Jobsite safety
- Visitors to jobsite
- Temporary utilities
- Pre-installation and pre-construction meetings by trade
- Testing, Commissioning and Special Inspections

I. Project-specific Issues
- Scope of work
- Parking
- Access
- Lay-down areas

J. Monthly Meetings
- Establish a regular date of month, time of day, and location
- Review work progress against project schedule
- Review Requests for Information (RFIs)
- Review Change Requests
- Review Change Proposals
- Review Change Orders
- Review Requisitions
- Approve documents as needed

K. Submittals
- Maximum time frame for review by Consultant
- Long-lead items
- Approval of finish/color packages
- Substitutions

L. Payment Process
- Cash flow projection
- Requisitions
- Lien waivers
- Stored materials
- Retainage

M. Change Order Process
- Proposal Request
- Change Proposal
- Change Order
- Written authorization to proceed
- Delays, damages and time extensions

N. Close-out Procedures
- Punch list (inspect only after work is completed!)
- Certificate of Substantial Completion (one, or multiple with phased completion)
- O & M (operations and maintenance) Manuals and training
- Commissioning report
- Special Inspections report
- As-built documents
- Warranty documents and claim process
- Certificate of Occupancy
- Lien releases, Consent of surety

01 00 00 - BASIC REQUIREMENTS

PART 1 - GENERAL

1.1 SECTION INCLUDES

A. Summary of Work: Contract, work by owner, contractor use of premises, future work.

B. Contract Considerations: Cash allowances, contingency allowance, inspection and testing allowances, schedule of values, applications for payment, change procedures, alternates.

C. Coordination and Meetings: Coordination, field engineering, cutting and patching, meetings, progress meetings, equipment electrical characteristics and components, examination, preparation, cutting and patching.

D. Submittals: Submittal procedures, construction progress schedules, proposed products list, shop drawings, product data, samples, manufacturers' installation instructions, manufacturers' certificates.

E. Quality Control: Quality assurance - control of installation, Tolerances, References, Mock-ups, Inspection and testing laboratory services, Manufacturers' field services and reports.

F. Construction Facilities and Temporary Controls: Temporary electricity, barriers and fencing, water control, exterior enclosures, interior enclosures, protection of installed work, progress cleaning, and waste removal.

G. Material and Equipment: Products, transportation, handling, storage, and protection, products options, substitutions.

H. Starting of Systems: Starting systems demonstration and instructions.

I. Contract Closeout: Contract closeout procedures, final cleaning, adjusting, project record documents, operation and maintenance data, spare parts and maintenance materials, warranties.

1.2 WORK BY OWNER

A. Items noted as NIC (Not in Contract), will be furnished and installed by Owner beginning at Substantial Completion.

B. The contractor shall submit, pay for and obtain applicable construction permits. Costs associated with these permitting costs shall be handled as reimbursable expenses

1.3 DAVIS BACON REPORTING AND WAGE DETERMINATIONS

A. The construction of this project will not be governed by the Davis Bacon Act.

1.4 CONTRACTOR USE OF PREMISES

A. Limit use of premises to allow:
1. Owner occupancy.
2. Work by others and work by owner.
3. Use of premises by public.

1.5 SCHEDULE OF VALUES

A. Submit schedule on AIA G703 (Requisition Continuation Sheet) standard form, similar electronic media printout will be considered.

B. Submit Schedule of Values in duplicate within 15 days after date of Owner-Contractor Agreement.

1.6 APPLICATIONS FOR PAYMENT

A. Submit three copies of each application on AIA G702 (Requisition Form), similar electronic media printout will be considered.

B. Content and Format: Utilize Schedule of Values for listing items in Application for Payment.

C. Payment Period: Monthly.

1.7 CASH ALLOWANCES

A. Section is not applicable

1.8 TESTING AND INSPECTION

A. The contractor shall carry costs associated with performing and documenting concrete slab-on-grade moisture testing referenced within latter floor finish specification sections

1.9 CHANGE PROCEDURES

A. Stipulated Sum/Price Change Order: Based on Proposal Request with General Contractor profit and overhead delineated and Contractor's fixed price quotation or Contractor's request for a Change Order as approved by Architect/Engineer.

B. Change Order Forms: AIA G701 (Change Order Form), similar electronic media printout will be considered.

C. Change Orders must be approved by the Owner and the Architect.

1.10 UNIT PRICING:

A. Section is not applicable

1.11 ALTERNATES:

A. **Deductive Alternate No. 1**: All work associated with eliminating Storage Rooms 109 and 110 as well as the Corridor 141 from the project scope. All walls and doors shown to be removed and/or replaced are to remain as is. All work related to providing any and all wall furring and closed cell foam installations within and around these spaces is to be removed from the scope of work. This deduct will require the wall between Storage 111 and Vacant Space 140 is to be extended to Storage 108 closing off Corridor 141. As this would then become dead/inaccessible space, new door 140 will need to be provided between Corridor 141 and Vacant space 140. All associated work scopes noted within the mechanical and electrical drawings for these spaces shall be removed from the project as well.

B. **Deductive Alternate No. 2**: All work associated with eliminating paint applications to the bottom of roof deck and steel support structure within rooms Storage 116, Storage 118, Storage 120 and Storage 121.

1.12 COORDINATION

A. Coordinate scheduling, submittals, and Work of the various sections of specifications to ensure efficient and orderly sequence of installation of interdependent construction elements. No claims for additional Time will be considered if the Work has not been properly coordinated.

B. Verify utility requirement characteristics of operating equipment are compatible with building utilities.

C. Coordinate space requirements and installation of mechanical and electrical work which are indicated diagrammatically on Drawings. Follow routing shown for pipes, ducts, and conduit, as closely as practicable.

D. In finished areas, conceal pipes, ducts, and wiring within the construction.

1.13 FIELD ENGINEERING

A. Establish elevations, lines, and levels and certify that elevations and locations of the Work conform with the Contract Documents.

B. Verify that field measurements are as indicated on shop drawings or as instructed by the manufacturer.

1.14 PRECONSTRUCTION PREINSTALLATION MEETINGS

A. Architect will schedule a preconstruction meeting for all affected parties.

B. When required in individual specification section, convene a preinstallation meeting at Project site prior to commencing work of the section.

1.15 PROGRESS MEETINGS

A. Schedule and administer meetings throughout progress of the Work at maximum bi-monthly intervals.

B. Preside at meetings, record minutes, and distribute copies within two days to those affected by decisions made.

1.16 EQUIPMENT ELECTRICAL CHARACTERISTICS AND COMPONENTS

A. Section is not applicable.

1.17 CUTTING AND PATCHING

A. Employ original installer to perform cutting and patching new Work; restore Work with new Products.

B. Submit written request in advance of cutting or altering structural or building enclosure elements.

C. Execute cutting, fitting, and patching including excavation and fill, to complete Work, and to:
1. Fit the several parts together, to integrate with other Work.
2. Uncover Work to install or correct ill-timed Work.
3. Remove and replace defective and non-conforming Work.
4. Remove samples of installed Work for testing.
5. Provide openings in elements of Work for penetrations of mechanical and electrical Work.

D. Cut masonry and concrete materials using masonry saw or core drill. Restore Work with new Products in accordance with requirements of Contract Documents.

E. Cut from finished side of surfaces to concealed side.

F. Protect existing construction from damage during cutting and patching.

G. Fit Work tight to adjacent elements. Maintain integrity of wall, ceiling, or floor construction; completely seal voids.

H. Fit Work tight to pipes, sleeves, ducts, conduit, and other penetrations through surfaces.

I. Refinish surfaces to match adjacent finishes in a manner that will eliminate evidence of patching and refinishing.

1.18 SUBMITTAL PROCEDURES

A. Submittal form to identify Project, Contractor, Subcontractor or supplier; and pertinent Contract Document references.

B. Submittals to Architect shall be provided in electronic format.

C. Apply Contractor's stamp, signed or initialed, certifying that review, verification of Products required, field dimensions, adjacent construction Work, and coordination of information is in accordance with the requirements of the Work and Contract Documents.

D. Identify variations from Contract Documents and Product or system limitations, which may be detrimental to successful performance of the completed Work.

E. All submittals shall conform to the requirements of the Contract Documents and, thus, presentation of a submittal shall represent by the contractor that the product is in

F. conformance. Products that do not conform with the Contract Documents shall be presented for review as Substitutions as specified within the following Substitutions article.

F. Revise and resubmit submittals as required; identify all changes made since previous submittal.

G. Distribute submittals reviewed by Architect/Engineer to project site and all affected parties.

H. Allow 10 (ten) working days for review and return of submittals by architect.

I. Do not allow submittals requiring Architect/Engineer’s action stamp to be used on the project site without marking.

J. Architect/Engineer’s action stamp is self-explanatory.

K. Reference Specification Section 01 33 23 – Shop Drawings, Product Data and Samples for further submittal information and requirements.

1.19 CONSTRUCTION PROGRESS SCHEDULES

A. Submit initial progress schedule in duplicate within 15 days after date of Owner-Contractor Agreement for Architect/Engineer review.

B. Submit revised schedules with each Application for Payment, identifying changes since previous version. Indicate estimated percentage of completion for each item of Work at each submission.

C. Submit a horizontal bar chart with separate line for each major section of Work or operation, identifying first workday of each week.

1.20 PROPOSED PRODUCTS LIST

A. Within 15 days after date of Owner-Contractor Agreement, submit list of major Products proposed for use, with name of manufacturer, trade name, and model number of each product.

1.21 PROPOSED SUBCONTRACTOR/SUPPLIER LIST

A. Within 15 days after date of Owner-Contractor Agreement, submit list of major subcontractors/suppliers proposed, with indication of trade/product type.

1.22 PRODUCT DATA

A. Product Data For Review:
1. Submitted to Architect/Engineer for review for the limited purpose of checking for conformance with information given and the design concept expressed in the contract documents.
2. After review, provide copies and distribute in accordance with SUBMITTAL PROCEDURES article above and for record purposes described in specification Section 01 70 00 - CONTRACT CLOSEOUT.

B. Product Data For Information:
1. Submitted for the Architect/Engineer's benefit as contract administrator or for the Owner.

C. Product Data for Project Close-out:
1. Submitted for the Owner's benefit during and after project completion.

D. Submit the all documentation in electronic format.

E. Mark each copy to identify applicable products, models, options, and other data. Supplement manufacturers' standard data to provide information unique to this project.

1.23 SHOP DRAWINGS

A. Shop Drawings For Review:
1. Submitted to Architect/Engineer for review for the limited purpose of checking for conformance with information given and the design concept expressed in the Contract Documents.
2. After review, produce copies and distribute in accordance with the SUBMITTAL PROCEDURES article above and for record purposes described in specification Section 01 70 00 - CONTRACT CLOSEOUT.

B. Shop Drawings For Information:
1. Submitted for the Architect/Engineer's benefit as contract administrator or for the Owner.

C. Shop Drawings For Project Close-out:
1. Submitted for the Owner's benefit during and after project completion.
2. Submit the number of opaque reproductions which Contractor requires, plus three copies which will be retained by Architect/Engineer.

1.24 SAMPLES

A. Samples For Review:
1. Submitted to Architect/Engineer for review for the limited purpose of checking for conformance with information given and the design concept expressed in the contract documents.
2. After review, produce duplicates and distribute in accordance with SUBMITTAL PROCEDURES article above and for record documents purposes described in specification Section 01 70 00 - CONTRACT CLOSEOUT.

B. Samples For Information:
1. Submitted for the Architect/Engineer's benefit as contract administrator or for the Owner.

C. Samples For Selection:
1. Submitted to Architect/Engineer for aesthetic, color, or finish selection.
2. Submit samples of finishes from the full range of manufacturers' standard colors, in custom colors selected, textures, and patterns for Architect/Engineer selection.
3. After review, produce duplicates and distribute in accordance with SUBMITTAL PROCEDURES article above and for record documents purposes described in specification Section 01 70 00 - CONTRACT CLOSEOUT.

D. Submit samples to illustrate functional and aesthetic characteristics of the Product.

E. Submit samples of finishes from the full range of manufacturers' standard colors, textures, and patterns for Architect/Engineer's selection.

1.25 MANUFACTURER INSTALLATION INSTRUCTIONS

A. When specified in individual specification sections, submit manufacturer printed instructions for delivery, storage, assembly, installation, start-up, adjusting, and finishing, as specified within the Product Data article above.

1.26 MANUFACTURER CERTIFICATES

A. When specified in individual specification sections, submit certifications by manufacturer to Architect/Engineer, in quantities specified for Product Data.

B. Indicate material or Product conforms to or exceeds specified requirements. Submit supporting reference data, affidavits, and certifications as appropriate.

1.27 QUALITY ASSURANCE - CONTROL OF INSTALLATION

A. Monitor quality control over suppliers, manufacturers, Products, services, site conditions, and workmanship, to produce Work of specified quality.

B. Comply with manufacturers' instructions.

C. Comply with specified standards as minimum quality for the Work except when more stringent tolerances, codes, or specified requirements indicate higher standards or more precise workmanship.

1.28 EXAMINATION

A. Verify that existing site conditions and substrate surfaces are acceptable for subsequent Work. Beginning new Work means acceptance of existing conditions.

B. Verify that utility services are available, of the correct characteristics, and in the correct location.

1.29 PREPARATION

A. Clean substrate surfaces prior to applying next material or substance.

B. Apply manufacturer required or recommended substrate primer, sealer, or conditioner prior to applying new material or substance in contact or bond.

1.30 TOLERANCES

A. Monitor fabrication and installation tolerance control of installed Products over suppliers, manufacturers, Products, site conditions, and workmanship, to produce acceptable Work. Do not permit tolerances to accumulate.

B. Comply fully with manufacturers' tolerances.

1.31 REFERENCES

A. Conform to reference standards by date of issue current as of date of Contract Documents.

B. Should specified reference standard conflict with Contract Documents, request clarification from Architect/Engineer before proceeding.

C. Reference Standards have the same force and effect as if bound herein and include publications of the following:
1. American National Standards Institute (ANSI).
2. American Concrete Institute (ACI) 2005.
3. American Institute of Steel Construction 2005 (AISC).
4. American Plywood Association 2010 (APA).
5. American Society for Testing and Materials 2010 (ASTM).
6. American Society of Civil Engineers 2010 (ASCE).
7. American Society of Heating, Refrigeration and Air Conditioning Engineers, Inc. (ASHRAE) 90.1 - 2007.
8. American Society of Mechanical Engineers (ASME).
9. Americans with Disabilities Act 1999 (ADA).
10. American Water Works Association 2005 (AWWA).
11. American Welding Society 2008 (AWS).
12. International Building Code 2015 (IBC).
13. Consumer Product Safety Commission (CSPC).

14. Factory Mutual (FM).
15. National Electric Manufacturers Association 2010 (NEMA).
16. National Electrical Code (NEC) 2014 (NFPA 70)
17. National Fire Protection Association 2009 (NFPA).
18. National Fire Protection Association (NFPA 101) Life Safety Code 2009
19. Underwriters Laboratories, Inc. 2007 (UL).
20. US Department of Commerce, National Bureau of Standards (NBS).
21. Federal, State and local MUBEC codes and regulations.
22. Department of Health and Human Services – Hospital Licensing

1.32 MOCK-UPS

A. Tests and sample installations will be performed under provisions identified in this section and identified in respective product specification sections and as requested by the architect.

1.33 TESTING AND INSPECTION LABORATORY SERVICES

A. Section not applicable

1.34 CORRELATION AND INTENT

A. Contract Documents are complementary, and elements of the Work required by one shall be as binding as if required by all. The intent of the Documents is to include all items necessary for the proper execution and completion of the Work.

B. Where discrepancies or conflicting requirements exist among the Contract Documents and/or applicable reference standards, the Contractor shall assume the greater quantity or quality level, normally the most costly. Refer conflicting requirements to the Architect/Engineer for interpretation before proceeding.

1.35 MANUFACTURERS' FIELD SERVICES AND REPORTS

A. When specified in individual specification sections, require material or Product suppliers or manufacturers to provide qualified staff personnel to observe site conditions, to initiate instructions and conduct warranty inspections when necessary.

B. Report observations and site decisions or instructions that are supplemental or contrary to manufacturers' written instructions.

1.36 EXAMINATION

A. Verify existing site conditions and substrate surfaces are acceptable for subsequent Work. Beginning new Work means acceptance of existing conditions.

B. Verify utility services are available, of correct characteristics, and in correct location.

1.37 PREPARATION

A. Clean substrate surfaces prior to applying next material or substance.

B. Apply manufacturer required or recommended substrate primer, sealer, or conditioner prior to applying new material or substance in contact or bond.

1.38 TEMPORARY ELECTRICITY

A. The Owner shall provide access to on-site power services required by the project. The contractor shall be responsible for all tie-in labor and material costs at the source.

B. Provide temporary electricity and power outlets for construction operations, connections, branch wiring, distribution boxes, and flexible power cords as required. Do not disrupt Owner's need for continuous service.

1.39 TEMPORARY LIGHTING FOR CONSTRUCTION PURPOSES

A. Provide and maintain temporary lighting for construction operations.

B. Provide branch wiring from power source to distribution boxes with lighting conductors, pigtails, and lamps as required.

C. Permanent building lighting may be utilized during construction.

1.40 TEMPORARY HEAT

A. Provide and maintain temporary heating as required by the project’s general construction finish installations.

1.41 TEMPORARY VENTILATION

A. Ventilate enclosed areas to assist cure of materials, to dissipate humidity, and to prevent accumulation of dust, fumes, vapors, or gases.

1.42 TELEPHONE SERVICE

A. The contractor shall make available to the architect and owner contact phone numbers and information for all field and main office personnel throughout the duration of the project.

1.43 TEMPORARY WATER SERVICE

A. Provide, maintain and pay for suitable quality water service required for construction operations.

1.44 TEMPORARY SANITARY FACILITIES

A. Provide and maintain required facilities and enclosures. New facilities may not be used.

B. Maintain in clean and sanitary condition.

1.45 BARRIERS AND FENCING

A. Provide barriers and/or fencing to prevent unauthorized entry to construction areas and to protect existing facilities and adjacent properties from damage.

B. Construction: Reference Specification 01 56 00. The Contractor shall enclose the limit of work with hard barriers. Coordinate the location of all barriers with the Owner and assure and authorities having jurisdiction. Do not block or impede means of egress paths and normal building operations. Provide doors with locking hardware in the assemblies maintain controlled access to the work space.

1.46 WATER CONTROL

A. Reference Civil documentation

1.47 EXTERIOR ENCLOSURES

A. Provide temporary insulated weather tight closures to exterior openings to permit acceptable working conditions and protection of the Work.

1.48 PROTECTING INSTALLED CONSTRUCTION

A. Provide temporary and removable protection for installed products. Control activity in immediate work area to prevent damage.

B. Protect finished floors, stairs, and other surfaces from traffic, dirt, wear, damage, or movement of heavy objects, by protecting with durable sheet materials.

C. Prohibit traffic or storage upon waterproofed or roofed surfaces. When traffic or activity is necessary, obtain recommendations for protection from waterproofing or roofing material manufacturer.

D. Prohibit traffic through landscaped areas.

1.49 SECURITY

A. Provide security and facilities to protect Work and existing facilities, and Owner's operations from unauthorized entry, vandalism, or theft.

1.50 POLLUTION AND ENVIRONMENTAL CONTROL

A. Provide methods, means, and facilities to prevent contamination of soil, water, and atmosphere from discharge of noxious, toxic substances, and pollutants produced by construction operations.

B. Provide dust control, erosion and sediment control, noise control, pest control and rodent control to allow for proper execution of the Work.

1.51 ACCESS ROADS

A. Utilize existing roads for access to the site. Coordinate allowable lay down areas with owner prior to project start-up.

1.52 PARKING

A. Coordinate construction personnel parking locations with owner.

1.53 PROGRESS CLEANING AND WASTE REMOVAL

A. Collect and maintain areas free of waste materials, debris, and rubbish. Maintain site in a clean and orderly condition.

1.54 PROJECT IDENTIFICATION

A. Section not applicable.

1.55 FIELD OFFICES AND SHEDS

A. Coordinate location of office trailer and the associated utility service tie-ins for the trailer/trailers with the owner.

1.56 REMOVAL OF UTILITIES, FACILITIES, AND CONTROLS

A. Remove temporary utilities, equipment, facilities, and materials, prior to Substantial Completion review.

B. Clean and repair damage caused by installation or use of temporary work.

C. Restore existing facilities used during construction to original condition. Restore permanent facilities used during construction to specified condition.

1.57 PRODUCTS

A. Products: Means new material, machinery, components, equipment, fixtures, and systems forming the Work, but does not include machinery and equipment used for preparation, fabrication, conveying and erection of the Work. Products may also include existing materials or components specifically identified for reuse.

B. Do not use materials and equipment removed from existing premises, except as specifically identified or allowed by the Contract Documents.

C. Provide interchangeable components of the same manufacture for components being replaced.

D. Provide Products of the same type from the same manufacturer.

1.58 TRANSPORTATION, HANDLING, STORAGE AND PROTECTION

A. Transport, handle, store, and protect Products in accordance with manufacturer's instructions.

1.59 PRODUCT OPTIONS

A. Products Specified by Reference Standards or by Description Only: Any Product meeting those standards or description.

B. Products Specified by Naming One or More Manufacturers: Products of manufacturers named and meeting specifications, no options or substitutions allowed.

C. Products Specified by Naming One or More Manufacturers with a Provision for Substitutions (or equal clause): Submit a request for substitution for any manufacturer not named.

1.60 SUBSTITUTIONS

A. Architect/Engineer will NOT consider requests for Substitutions during the bid process.

B. Architect/Engineer will consider requests for Substitutions ONLY within 15 days after date of Owner-Contractor Agreement. .

C. Document each request with complete data substantiating compliance of proposed Substitution with Contract Documents.

D. Submit three copies of request for Substitution for consideration. Limit each request to one proposed Substitution.

E. Conditions: Substitutions will be considered under the following conditions:

1. Revisions to the Contract Documents are not required.
2. Proposed changes are in keeping with the intent of the Contract Documents.
3. The specified product or construction method cannot be provided within the Contract Time, if not due to failure by the Contractor to pursue the work promptly.
4. The specified product or construction method cannot receive approval by governing authorities, and the substitution can be approved.
5. A substantial advantage is offered to the Owner in terms of cost, time or maintenance.
6. The specified product or construction method is not compatible with other materials, and the substitution is compatible.
7. The specified product or construction method cannot receive a required warranty, and the substitution can be warranted.
8. The Contractor will bear the impact of additional cost or time needed to provide the substitution, including design services.
9. The Contractor will be responsible for coordinating the substitution with other Work.

F. The substitution process SHALL BE considered a stand-alone process and shall not eliminate the need for the contractor to meet the submittal and shop drawing requirements outline within this document. Substitutions SHALL NOT be made during the submittal process. Any substitutions received within submittal packages will be immediately rejected without consideration.

1.61 STARTING SYSTEMS

A. Provide seven days notification prior to start-up of each item.

B. Ensure that each piece of equipment or system is ready for operation.

C. Execute start-up under supervision of responsible persons in accordance with manufacturers' instructions.

D. Submit a written report that equipment or system has been properly installed and is functioning correctly.

1.62 DEMONSTRATION AND INSTRUCTIONS

A. Demonstrate operation and maintenance of Products to Owner's personnel two weeks prior to date of Substantial Completion. .

B. For equipment or systems requiring seasonal operation, perform demonstration for other season within six months.

C. Demonstrate start-up, operation, control, adjustment, trouble-shooting, servicing, maintenance, and shutdown of each item of equipment at agreed-upon times, at designated location.

1.63 TESTING, ADJUSTING, AND BALANCING

A. Contractor will appoint, employ, and pay for services of an independent firm to perform testing, adjusting, and balancing.

B. Reports will be submitted by the independent firm to the Architect/Engineer indicating observations and results of tests and indicating compliance or non-compliance with specified requirements and with the requirements of the Contract Documents.

C. Cooperate with independent firm; furnish assistance as requested.

D. Re-testing required because of non-conformance to specified requirements will be charged to the Contractor.

1.64 CONTRACT CLOSEOUT PROCEDURES

A. Submit written certification that Contract Documents have been reviewed, Work has been inspected, and that Work is complete in accordance with Contract Documents and ready for Architect/Engineer's inspection.

B. Submit final Application for Payment identifying total adjusted Contract Sum/Price, previous payments, and amount remaining due.

C. Reference specification Section 10 70 00 - Contract Closeout for further closeout procedure requirements.

1.65 FINAL CLEANING

A. Execute final cleaning prior to final inspection.

B. Thoroughly clean interior and exterior surfaces exposed to view. Vacuum carpeted and soft surfaces, wash and polish glass, reflective and smooth hard surfaces.

C. Clean debris from site, roofs, gutters, downspouts, and drainage systems.

D. Replace filters of operating equipment.

E. Remove waste and surplus materials, rubbish, and construction facilities from the site.

1.66 ADJUSTING

A. Adjust operating Products and equipment to ensure smooth and unhindered operation.

1.67 PROJECT RECORD DOCUMENTS

A. Maintain on site one set of Contract Documents to be utilized for record documents.

B. Record actual revisions to the Work. Record information concurrent with construction progress.

C. Specifications: Legibly mark and record at each Product section a description of actual Products installed.

D. Record Documents and Shop Drawings: Legibly mark each item to record actual construction.

E. Submit original and two photocopies of record documents to Owner with claim for final Application for Payment.

F. Reference specification Section 01 32 00 -Project Record requirements.

1.68 OPERATION AND MAINTENANCE DATA

A. Submit two sets prior to final inspection, bound in 8-1/2 x 11 inch text pages, three D side ring binders with durable covers.

B. Prepare binder cover with printed title "OPERATION AND MAINTENANCE INSTRUCTIONS" and title of project.

C. Internally subdivide the binder contents with permanent page dividers, logically organized, with tab titles clearly printed under reinforced laminated plastic tabs.

D. Reference specification Section 01 32 00 -Project Record Documents and Section 01 70 00 - Contract Closeout for further requirements.

1.69 SPARE PARTS AND MAINTENANCE MATERIALS

A. Provide Products, spare parts, maintenance and extra materials in quantities specified in individual specification sections.

B. Deliver to Project site and place in location as directed obtain receipt prior to final payment.

1.70 WARRANTIES

A. Provide duplicate notarized copies.

B. Execute and assemble transferable warranty documents from Subcontractors, suppliers, and manufacturers.

C. Submit one project binder containing all warranty documentation for all materials utilized for the project. Submit as part of the Close-out Documentation indicated within 01 70 00 prior to final Application for Payment.

D. All project warranties for all materials utilized for shall extend for 12 months beyond the issuance of the Certificate of Substantial Completion unless this period is lengthen by specific specification sections to follow.

END OF SECTION

01 07 00 - ABBREVIATIONS and DEFINITIONS

PART 1 - GENERAL

1.1 INTERPRETATIONS

A. This section is not intended to cover all definitions which may be required, nor all the abbreviations which may be used on the Contract Documents.

B. Questions regarding definition of terms, or meaning of abbreviations should be directed to the Architect.

1.2 DEFINITIONS

A. The following definitions shall apply to the Specifications:
1. The words "Furnish" or "Supply" means purchase and delivery of items or materials to the project site, including proper storage without installation.
2. The word "Install" means applications, connection or erection of items or materials that have been furnished.
3. The word "Provide" means both furnishing and supplying and installing of items or materials.
4. The term "Work" as used herein refers to work at site of project and includes all labor and materials to be incorporated in the construction.
5. The word "Concealed" means work within or behind various construction elements, or in crawl spaces or trenches, which is not exposed to view when the project is complete.
6. The word "Exposed" means anything exposed to view when the project is complete, as opposed to being "concealed."

1.3 ABBREVIATIONS

A. The following list of abbreviations shall apply to the Drawings and Specifications. This list is not all inclusive. Other abbreviations may exist on the drawings. If any questions arise regarding abbreviations, contact the Architect for interpretation.

A/B	Acid, Bicarb Tubing
ABV	Above
AC	Air Conditioning
ACT	Acoustical Ceiling Tile
ADD	Addendum
ADJ	Adjacent
ADJT	Adjustable
AFF	Above Finished Floor
ALT	Alternate
ALUM	Aluminum
APPROX	Approximate
APX	Approximate
ARCH	Architect(ural)
AUTO	Automatic
BD	Board
BEL	Below
BET	Between

BIT	Bituminous
BK	Brick
BLK	Block
BLKG	Blocking
BOT	Bottom
BRG	Bearing
BRK	Brick
BSMT	Basement
CAB	Cabinet
CG	Corner Guard
CIPC	Cast-in-Place Concrete
CJ	Control Joint
CJT	Control Joint
CL	Clear
CLG	Ceiling
CMU	Concrete Masonry Unit
CO	Cased Opening
COL	Column
CONC	Concrete
CPT	Carpet
CRS	Course
CSC	Concealed Spline Ceiling
CT	Ceramic Tile
CTSK	Countersunk Screw
CW	City Water
DET	Detail
DI	DeIonized Water
DIM	Dimension
DISP	Disposal
DISPEN	Dispenser
DO	Door Opening
DPL	Disposal
DPR	Dispenser
DR	Door
DW	Drywall
DWG	Drawing
DWR	Drawer
ELEC	Electrical
EMER	Emergency
EMR	Existing Material to Remove
EQ	Equal
EQUIP	Equipment
EXG	Existing
EXIST	Existing
EXT	Exterior
FCO	Floor Clean Out
FD	Floor Drain
FE	Fire Extinguisher
FEC	Fire Extinguisher Cabinet
FIN	Finish(ed)
FIXT	Fixture
FL	Floor

FLR	Floor(ing)
FLUR	Fluorescent
FP	Fixed Panel
FS	Floor Sink
GA	Gage, Gauge
GL	Glass
GV	Galvanized
GWB	Gypsum Wall Board
H	High
HP	Handicapped
HR	Hour
HT	Height
HVAC	Heating-Ventilating-Air-Conditioning
HW	HW Hot Water
HWR	Hot Water Return
ID	Inside Diameter
INS	Insulate (d), (ion)
INT	Interior
IW	Indirect Waste
IWV	Indirect Waste Vent
JT	Joint
LAM	Laminate
LAV	Lavatory
LT	Light
MAS	Masonry
MAX	Maximum
MECH	Mechanical
MT	Metal
MIN	Minimum
MISC	Miscellaneous
MO	Masonry Opening
MOV	Moveable
MRGB	Moisture Resistant Gypsum Wallboard
NIC	Not in Contract
NO	Number
NS	Nurses Station
NTS	Not to Scale
OA	Overall
OC	On Center
OF	Owner Furnished
OFI	Owner Furnished and Installed
OFIC	Owner Finished Installed by Contractor
OH	Opposite Hand
OPG	Opening
OPNG	Opening
PAT	Patient
PL	Plate

PLAM	Plastic Laminate
PLAS	Plaster
PLYWD	Plywood
PNL	Panel
PSTA	Patient Station
PTD	Paper Towel Dispenser
PTN	Partition
PTR	Paper Towel Dispenser
PVC	Poly. Vinyl Chloride
PWD	Plywood
R	Rubber
RA	Return Air
RB	Rubber Base
REF	Refrigerator
REFR	Refrigerator
REFRIG	Refrigerator
RM	Room
REMOV	Removable
RO	Reverse Osmosis (water)
RP	Removable Panel
SDS	Solution Delivery System
SHT	Sheet
SIM	Similar
SL	Sliding
SQ	Square
SR	Sheet Rubber
SST	Stainless Steel
ST	Steel
STA	Station
STD	Standard
STL	Steel
STR	Structural
STRUCT	Structural
STUC	Stucco
SUS	Suspended
THK	Thick(ness)
TKBD	Tackboard
TPD	Toilet Paper Dispenser
TYP	Typical
V	Vinyl
VCT	Vinyl Composition Tile
VERT	Vertical
VWC	Vinyl Wall Covering
WC	Water Closet
WCO	Wall Clean Out
WD	Wood
WDP	Wood Panel on Gypsum Wallboard
WIN	Window
WO	Window Opening

END OF SECTION

01 14 19 - CONTRACTOR'S USE OF THE PREMISES

PART 1 - GENERAL

1.1 DESCRIPTION

A. Work included: This section applies to situations in which the Contractor or his representatives including, but not necessarily limited to, suppliers, subcontractors, employees, and field engineers, enter upon the Owner's property.

B. Related Work:
   1. Documents affecting work of this Section include, but are not necessarily limited to, General Conditions, Supplementary Conditions, and Sections in Division 1 of these Specifications.

1.2 QUALITY ASSURANCE

A. Promptly upon award of the Contract, notify all pertinent personnel regarding requirements of this Section.

B. Require that all personnel who will enter upon the Owner's property certify their awareness of familiarity with the requirements of this Section.

1.3 USE OF PREMISES

A. The Contractor shall confine his apparatus, storage of materials and operations of his workmen to limits as required by the Owner, and shall not unreasonably encumber the premises with his materials.

B. The Contractor shall maintain access to and egress from the building in a safe manner, well marked and in locations as required by the local authorities having jurisdiction over this work. They shall be responsible for furnishing and maintaining in a safe condition all barricades, temporary enclosures, railings, lights, etc. and removing same at completion of job.

C. At no time shall the structure be loaded beyond safe limits, and in no case shall any loads exceed the design limits.

D. It is anticipated that the bulk of the work shall be done during the regular work hours of the day. All work carried on outside of regular working hours shall be done at the Contractor's expense, and no extras will be allowed. Reference the off-hour noting on drawing TP for specific work scopes required to be completed during off-hours. The use of "Overtime" shall be at the Contractor's option but will not be reimbursed by the Owner.

1.4 SECURITY

A. Restrict the access of all persons entering upon the Owner's property in connection with the Work to the Access Route and to the actual site of the work.

1.5 COORDINATION OF WORK

A. The Contractor shall limit the storage of materials and equipment to the areas indicated or required by the Owner.

B. At no time during the work under the Contract shall the Contractor place, or cause to be placed, any material or equipment, etc., at any location that would impede or impair access to or from the present facilities for other tenants, employees, or delivery facilities.

C. The Contractor shall cooperate with the Owner to the fullest extent in providing traffic control during the course of construction so as to provide a minimum of inconvenience to existing tenants.

D. The Contractor shall send proper notices, make all necessary arrangements, and perform all services required in the care and maintenance of all public utilities. The Contractor shall, during the construction period and until final acceptance of the work as a whole by the Owner, assume all responsibility concerning the same for which the Owner my be liable.

E. It is of paramount importance that the work of this Contract does not interfere in any way with the normal operation of the existing utility services and no interruption of the utility services in the existing building can be allowed. Coordinate all work affecting service in the existing building with the Architect and the Owner.

1.6 NOISE AND DUST CONTROL

A. Exercise all possible care to control excessive noise and dust during the construction to keep these problems to a minimum. Traffic or construction areas shall be kept clean as required by the Owner and in accordance with applicable local requirements.

B. Notify the Owner prior to using air compressor, jack-hammers, etc., in sufficient time to permit removal of any occupants close enough to be affected by such disturbances. Screen all noisy equipment with temporary enclosures to shield adjacent areas as much as possible.

1.7 ADJACENT WORK – within adjacent occupied spaces

A. In preparing the proposal, the Contractor and Subcontractors shall be aware that adjacent work may be required due to the scope of the work indicated by the Documents. These areas include, but are not limited to:

1. Remote mechanical or electrical locations
2. Roof areas above or adjacent to the space
3. General limits of adjacent corridors and spaces.

1.8 RESTRICTIONS TO WORK

A. On-Site Hours: The contractor shall perform the work during the normal work hours of 7:00am and 8:00pm, Monday through Friday unless directed otherwise. It shall be

understood that the owner will be remain in full operation on neighboring portions of the property. Work impacting these areas shall be fully coordinated with the owner prior to undertaking work that may impact normal business operations. It is the intent of this project that the contractor shall limit and minimize disturbances.

B. Interruptions to Existing Utilities: No interruption in utilities serving the Owner's occupied facilities shall occur without first obtaining permitting to do so. Permitting shall be obtained under the following conditions and only after having arranged to provide temporary utility services according to the requirements hereafter:
   1. The Owner shall be notified no less than 72 hours prior to and utility interruption.
   2. The contractor shall not proceed with any utility interruption without written approval from the Owner. The contractor shall obtain the proper utility shutdown permit for the work being performed.

END OF SECTION

SECTION 01 21 00 - ALLOWANCES

PART 1 - GENERAL

1.1 RELATED DOCUMENTS

A. Drawings and general provisions of the Contract, including General and Supplementary Conditions and Division 01 Specification Sections, apply to this Section.

1.2 SUMMARY

A. Section includes administrative and procedural requirements governing allowances.

1. Certain items are specified in the Contract Documents by allowances. Allowance quantities have been established for the scope of work items. The intent is to use these values as budgets for the individual work scopes, against which the unit prices per unit will be applied. The contractor is responsible for maintaining a quantity of each installed repair type which will be confirmed by the Owner's representative prior to issuing payment. If necessary, additional requirements will be issued by Change Order.

   Items noted as Lump Sum quantities shall include areas noted in their entirety. Should additional locations outside these zones be identified for inclusion in the Contract, the unit price values provided in the Bid Form and described in Section 01 22 00 Unit Prices shall apply to those locations.

B. Types of allowances include the following:

1. Unit cost allowances requested on Bid Form.

1.3 SUBMITTALS

A. Submit proposals for purchase of products or systems included in allowances, in the form specified for Change Orders.

B. Submit invoices or delivery slips to show actual quantities of materials delivered to the site for use in fulfillment of each allowance.

C. Coordinate and process submittals for allowance items in same manner as for other portions of the Work.

1.4 COORDINATION

A. Coordinate allowance items with other portions of the Work. Furnish templates as required to coordinate installation.

1.5 UNIT-COST ALLOWANCES

A. Allowance shall include cost to Contractor of specific products and materials included under the allowance and shall include taxes, freight, and delivery to Project site.

1.6 ADJUSTMENT OF ALLOWANCES

A. Allowance Adjustment: To adjust allowance amounts, prepare a Change Order proposal based on the difference between purchase amount and the allowance, multiplied by final measurement of work-in-place where applicable. If applicable, include reasonable allowances for cutting losses, tolerances, mixing wastes, normal product imperfections, and similar margins.

1. Submit substantiation of a change in scope of work, if any, claimed in Change Orders related to unit-cost allowances.
2. Owner reserves the right to establish the quantity of work-in-place by independent quantity survey, measure, or count.
3. Do not include Contractor's or subcontractor's indirect expense in the Change Order cost amount unless it is clearly shown that the nature or extent of work has changed from what could have been foreseen from information in the Contract Documents.

PART 2 - PRODUCTS (Not Used)

PART 3 - EXECUTION

3.1 EXAMINATION

A. Examine products covered by an allowance promptly on delivery for damage or defects. Return damaged or defective products to manufacturer for replacement.

3.2 PREPARATION

A. Coordinate materials and their installation for each allowance with related materials and installations to ensure that each allowance item is completely integrated and interfaced with related work.

3.3 SCHEDULE OF ALLOWANCES

A. Allowances: Unit cost allowances as enumerated in the summary of work section 01 10 00

1. Coordinate quantity allowance adjustment with unit-price requirements in Section 01 22 00 "Unit Prices."

END OF SECTION

SECTION 01 22 00 - UNIT PRICES

PART 1 - GENERAL

1.1 RELATED DOCUMENTS

A. Drawings and general provisions of the Contract, including General and Supplementary Conditions and other Division 01 Specification Sections, apply to this Section.

1.2 SUMMARY

A. Section includes administrative and procedural requirements for unit prices.

B. Related Requirements:

1. Section 01 21 00 "Allowances" for procedures for using unit prices to adjust quantity allowances.
2. Section 01 26 00 "Contract Modification Procedures" for procedures for submitting and handling Change Orders.

1.3 DEFINITIONS

A. Unit price is an amount incorporated into the Agreement, applicable during the duration of the Work as a price per unit of measurement for materials, equipment, or services, or a portion of the Work, added to or deducted from the Contract Sum by appropriate modification, if the scope of Work or estimated quantities of Work required by the Contract Documents are increased or decreased.

1.4 PROCEDURES

A. Unit prices include all necessary material, plus cost for delivery, installation, insurance, applicable taxes, overhead, and profit.

B. Measurement and Payment: See individual Specification Sections for work that requires establishment of unit prices. Methods of measurement and payment for unit prices are specified in those Sections.

C. Owner reserves the right to reject Contractor's measurement of work-in-place that involves use of established unit prices and to have this work measured, at Owner's expense, by an independent surveyor acceptable to Contractor.

D. List of Unit Prices: A schedule of unit prices is included in Part 3. Specification Sections referenced in the schedule contain requirements for materials described under each unit price.

PART 2 - PRODUCTS (Not Used)

PART 3 - EXECUTION

3.1 SCHEDULE OF UNIT PRICES

A. Unit Price No. 1:

1. Description: Remove/replace wood siding and trim at dormers.
2. Unit of Measurement: Square Foot (SF)
3. Quantity Allowance: Coordinate unit price with allowance adjustment requirements in Section 01 21 00 "Allowances."

B. Unit Price No. 2:

1. Description: Roof Slate Remove/Replace
2. Unit of Measurement: each shingle.
3. Quantity Allowance: Coordinate unit price with allowance adjustment requirements in Section 01 21 00 "

C. Unit Price No. 3:

1. Description: Remove/Replace copper skirt including slate shingle removal/replacement required for its installation for lengths outside identified scope of work on drawings.
2. Unit of Measurement: Square Foot (SF)
3. Quantity Allowance: Coordinate unit price with allowance adjustment requirements in Section 01 21 00 "Allowances."

D. Unit Price No. 4:

1. Description: Rake/repoint brick mortar joints outside identified scope of work areas on drawings.
2. Unit of Measurement: Square Foot (SF)
3. Quantity Allowance: Coordinate unit price with allowance adjustment requirements in Section 01 21 00 "Allowances."

E. Unit Price No. 5:

1. Description: Remove slate sufficient to reconstruct the slate to copper transition at the shed roofs.
2. Unit of Measurement: Linear Foot (SF), inclusive of multiple wythes as necessary.
3. Quantity Allowance: Coordinate unit price with allowance adjustment requirements in Section 01 21 00 "Allowances."

F. Unit Price No. 6

1. Description: Remove and replace copper valleys with 24 oz. copper, including slate shingle removal/replacement required for its installation for lengths outside identified scope of work on drawings.

2. Unit of Measurement: Linear Foot (LF)
3. Quantity Allowance: Coordinate unit price with allowance adjustment requirements in Section 01 21 00 "Allowances."

G. Unit Price No. 7:

1. Description: Masonry Façade surface cleaning.
2. Unit of Measurement: Square Foot (SF)
3. Quantity Allowance: Coordinate unit price with allowance adjustment requirements in Section 01 21 00 "Allowances."

H. Unit Price No. 8:

1. Description: Scrape, paint and caulk window trim outside of identified work scope.
2. Unit of Measurement: Per SF of window.
3. Quantity Allowance: Coordinate unit price with allowance adjustment requirements in Section 01 21 00 "Allowances."

I. Unit Price No. 9:

1. Description: Slate roof replacement
2. Unit of Measurement: each shingle. (EA)
3. Quantity Allowance: Coordinate unit price with allowance adjustment requirements in Section 01 21 00 "

END OF SECTION

01 30 00 - ADMINISTRATIVE REQUIREMENTS

PART1 - GENERAL

1.1 SECTION INCLUDES

A. Coordination and project conditions.

B. Preconstruction meeting.

C. Site mobilization meeting.

D. Progress meetings.

E. Pre-installation meetings.

F. Cutting and patching.

G. Special procedures.

1.2 COORDINATION AND PROJECT CONDITIONS

A. Coordinate scheduling, submittals, and Work of various sections of Project Manual to ensure efficient and orderly sequence of installation of interdependent construction elements, with provisions for accommodating items installed later.

B. Verify utility requirements and characteristics of operating equipment are compatible with building utilities. Coordinate work of various sections having interdependent responsibilities for installing, connecting to, and placing in service, operating equipment.

C. Coordinate space requirements, supports, and installation of mechanical and electrical Work indicated diagrammatically on Drawings. Follow routing shown for pipes, ducts, and conduit, as closely as practicable; place runs parallel with lines of building. Utilize spaces efficiently to maximize accessibility for other installations, for maintenance, and for repairs.

D. In finished areas except as otherwise indicated, conceal pipes, ducts, and wiring within construction. Coordinate locations of fixtures and outlets with finish elements.

E. Coordinate completion and clean-up of Work of separate sections in preparation for Substantial Completion and for portions of Work designated for Owner's partial occupancy.

F. After Owner occupancy of premises, coordinate access to site for correction of defective Work and Work not in accordance with Contract Documents, to minimize disruption of Owner's activities.

1.3 PRECONSTRUCTION MEETING

A. Architect/Engineer will schedule meeting after Notice of Award.

B. Attendance Required: Owner, Architect/Engineer and Contractor.

C. Agenda:
1. Execution of Owner-Contractor Agreement.
2. Submission of applicable executed bonds and insurance certificates.
3. Distribution of Contract Documents.
4. Submission of list of Subcontractors, list of products, schedule of values, and progress schedule.
5. Designation of personnel representing parties in Contract and Architect/Engineer.
6. Procedures and processing of field decisions, submittals, substitutions, applications for payments, proposal request, Change Orders, and Contract closeout procedures.
7. Scheduling.
8. Coordination of premise access.
9. Procedures for managing off-hours portions of the work.
10. Record minutes and distribute electronic “PDF” versions within (5) five days after meeting to all participants and those affected by decisions made.

1.4 SITE MOBILIZATION MEETING

A. Architect/Engineer will schedule meeting at Project site prior to Contractor occupancy.

B. Attendance Required: Owner, Owner’s representatives and Contractor.

C. Agenda:
1. Use of premises by Owner and Contractor.
2. Use of site premises for project lay down and trailer locations.
3. Owner's requirements and partial occupancy.
4. Construction facilities and controls provided by Owner.
5. Temporary utilities provided by Owner.
6. Security and housekeeping procedures.
7. Application for payment procedures.
8. Procedures for testing.
9. Procedures for maintaining record documents.
10. Requirements for start-up of equipment.
11. Inspection and acceptance of equipment put into service during construction period.

D. Record minutes and distribute electronic “PDF” versions within (5) five days after meeting to all participants and those affected by decisions made.

1.5 PROGRESS MEETINGS

A. Schedule and administer meetings throughout progress of the Work at maximum bi-monthly intervals.

B. Make arrangements for meetings, prepare agenda with copies for participants, preside at meetings.

C. Attendance Required: Job superintendent, major subcontractors and suppliers, Owner and/or Owner's Representative, Architect/Engineer as appropriate to agenda topics for each meeting.

D. Agenda:
1. Review minutes of previous meetings.
2. Review of Work progress. Reference Section 3.1 below.
3. Field observations, problems, and decisions.
4. Identification of problems impeding planned progress.
5. Review of submittals schedule and status of submittals.
6. Review of off-site fabrication and delivery schedules.
7. Maintenance of progress schedule.
8. Corrective measures to regain projected schedules.
9. Planned progress during succeeding work period.
10. Coordination of projected progress.
11. Maintenance of quality and work standards.
12. Effect of proposed changes on progress schedule and coordination.
13. Other business relating to Work.

E. Record minutes and distribute electronic "PDF" versions within (5) five days after meeting to all participants and those affected by decisions made.

1.6 PRE-INSTALLATION MEETINGS

A. When required in individual specification sections, convene pre-installation meetings at the Project site prior to commencing work of specific section.

B. Require attendance of parties directly affecting, or affected by, Work of specific section.

C. Notify Architect/Engineer five days in advance of meeting date.

D. Prepare agenda and preside at meeting:
1. Review conditions of installation, preparation and installation procedures.
2. Review coordination with related work.

E. Record minutes and distribute electronic "PDF" versions within (5) five days after meeting to all participants and those affected by decisions made.

PART 2 PRODUCTS - Not Used

PART 3 EXECUTION

3.1 RECORD OF WORK PROGRESS

A. At a minimum, on a bi-weekly basis and at important points in the construction process provide and maintain a photographic record of the work in progress. Provide and maintain a

work summary associated with the photographic record. Prepare and have available for review and comment for all progress meetings.

3.2 CUTTING AND PATCHING

A. Employ skilled and experienced installer to perform cutting and patching.

B. Submit written request in advance of cutting or altering elements affecting:
1. Structural integrity of element.
2. Integrity of weather-exposed or moisture-resistant elements.
3. Efficiency, maintenance, or safety of element.
4. Visual qualities of sight exposed elements.
5. Work of Owner or separate contractor.

C. Execute cutting, fitting, and patching including excavation and fill, to complete Work, and to:
1. Fit the several parts together, to integrate with other Work.
2. Uncover Work to install or correct ill-timed Work.
3. Remove and replace defective and non-conforming Work.
4. Remove samples of installed Work for testing.
5. Provide openings in elements of Work for penetrations of mechanical and electrical Work.

D. Execute work by methods to avoid damage to other Work, and to provide proper surfaces to receive patching and finishing.

E. Cut masonry and concrete materials using masonry saw or core drill.

F. Restore Work with new products in accordance with requirements of Contract Documents.

G. Fit Work tight to pipes, sleeves, ducts, conduit, and other penetrations through surfaces.

H. Maintain integrity of wall, ceiling, or floor construction; completely seal voids.

I. At penetrations of fire rated walls, partitions, ceiling, or floor construction, completely seal voids in accordance with Section 07 84 00.

J. Refinish surfaces to match adjacent finishes. For continuous surfaces, refinish to nearest intersection; for assembly, refinish entire unit.

K. Identify hazardous substances or conditions exposed during the Work to Architect/Engineer for decision or remedy.

3.3 SPECIAL PROCEDURES

A. Materials: As specified in product sections; match existing with new products for patching and extending work.

B. Employ skilled and experienced installers to perform alteration work.

C. Cut, move, or remove items as necessary for access to alterations and renovation Work. Replace and restore at completion.

D. Remove unsuitable material not marked for salvage, including rotted wood, corroded metals, and deteriorated masonry and concrete. Replace materials as specified for finished Work.

E. Remove debris and abandoned items from area and from concealed spaces.

F. Prepare surface and remove surface finishes to permit installation of new work and finishes.

G. Close openings in exterior surfaces to protect existing work from weather and extremes of temperature and humidity.

H. Remove, cut, and patch Work in manner to minimize damage and to permit restoring products and finishes to original condition.

I. Refinish existing visible surfaces to remain in renovated rooms and spaces, to renewed condition for each material, with neat transition to adjacent finishes.

J. Where new Work abuts or aligns with existing, provide smooth and even transition. Patch Work to match existing adjacent Work in texture and appearance.

K. When finished surfaces are cut so that smooth transition with new Work is not possible, terminate existing surface along straight line at natural line of division and submit recommendation to Architect/Engineer for review.

L. Where change of plane of 1/4 inch or more occurs, submit recommendation for providing smooth transition; to Architect/Engineer for review.

M. Trim existing doors to clear new floor finish. Refinish trim to original or specified condition.

N. Patch or replace portions of existing surfaces which are damaged, lifted, discolored, or showing other imperfections.

O. Finish surfaces as specified in individual product sections.

END OF SECTION

01 31 19 - PROJECT MEETINGS

- GENERAL

SECTION INCLUDES:

Contractor's Responsibilities:
Schedule and administer meetings throughout duration of work.
Prepare agenda for meetings.
Distribute written notice of each meeting seven working days in advance of meeting date.
Make physical arrangements for meetings.
Preside at meetings.
Record the minutes; include all significant proceedings and decisions.
Reproduce and distribute copies of minutes within three working days after each meeting.
Provide one copy to:
All participants in the meeting, including the Architect.
All parties affected by decisions made at the meeting.

Participants:
Qualified representative of Contractors, Subcontractors, and Suppliers authorized to act on behalf of the parties they represent.
Owner's Representative at their option.

PRE-CONSTRUCTION MEETING

Schedule meeting within the early stages of Construction as determined by the General Contractor.

Suggested agenda: Prepare written material, distribute lists, and discuss the following:
Identification of major Subcontractors and Suppliers
Projected construction schedules.
Critical work sequencing
Major equipment deliveries and priorities
Project coordination, including designation of responsible person.
Procedures for, and processing of:
Field decisions.
Proposal requests.
Submittals.
Change orders.
Applications for payments.

Adequacy of distribution of Contract Documents.
Procedures for Maintaining Record Documents
Use of premises:
Office, work, and storage areas.
Owner's requirements.
Compliance with applicable CDC Guidelines

Construction facilities, construction aids, and controls.
Temporary utilities.
Safety and first aid procedures.
Security procedures.
Housekeeping procedures.
Working days/hours.

PROGRESS MEETINGS

Schedule regular bi-weekly meetings and as necessary, schedule additional meetings.

Suggested Agenda:
Review and approval of minutes of previous meeting.
Review of work progress since previous meeting.
Field observations, problems, and conflicts.
Problems which impede construction schedule.
Review of off-site fabrication, delivery schedules.
Corrective measures and procedures required to regain projected schedule.
Revisions to construction schedule.
Plan progress and schedule for succeeding work period.
Coordination of schedules.
Review submittal schedules; expedite as required.
Maintenance of quality standards
Review proposed changes for:
Effect on construction schedule and on completion date.
Effect on other contracts of the Project.
Other business.

PRE-INSTALLATION

When required in individual Specification Section, schedule a pre-installation meeting at the job-site prior to starting the work of the Section.

Require attendance of entities directly affecting, or affected by, the work of the Section.

Notify Owner’s Project Manager two weeks in advance of meeting date.

END OF SECTION

01 32 00 - PROJECT RECORD DOCUMENTS

PART 1 - GENERAL

1.1 DESCRIPTION

A. Work included:
1. Throughout progress of the Work, maintain an accurate record of changes in the Contract Documents, as described in Article 3.01 below.
2. Upon completion of the Work, transfer the recorded changes to a set of Record Documents, as described in Article 3.02 below.

B. Related Work:
1. Documents affecting the work of this Section include, but are not necessarily limited to, General Conditions, Supplementary Conditions, and Sections in Division 1 of these Specifications.
2. Other requirements affecting Project Record Documents may appear in other pertinent Sections of these Specifications.

1.2 QUALITY ASSURANCE

A. Delegate the responsibility for maintenance of Record Documents to one person on the Contractor's staff as approved by the Architect.

B. Accuracy of Records:
1. Thoroughly coordinate changes within the Record Documents, making adequate and proper entries on each page of Specifications and each sheet of Drawings and other Documents where such entry in required to show the change properly.
2. Accuracy of records shall be such that future searches for items shown in the Contract Documents may reasonably rely on information obtained from the approved Project Record Documents.

C. Make entries within 24 hours after receipt of information the change has occurred.

1.3 SUBMITTALS

A. Comply with pertinent provisions of Section 01 33 23.

B. Prior to submitting request for final payment, submit the final Project Record Documents to the Architect and secure his approval.

PART 2 - PRODUCTS

2.1 RECORD DOCUMENTS

A. Job set: Promptly following the receipt of the Owner's Notice to Proceed, secure from the Architect at no charge to the Contractor one complete set of all Documents comprising the Contract.

B. Final Record Documents: At a time nearing the completion of the Work, secure from the Architect at no charge to the Contractor one complete set of all Drawings in the Contract.

PART 3 - EXECUTION

3.1 MAINTENANCE OF JOB SET

A. Immediately upon receipt of the job set described in Paragraph 2.01A above, identify each of the Documents with the title "RECORD DOCUMENTS - JOB SET".

B. Preservation:
1. Do not use the Job Set for any purpose except entry of new data and for review by the Architect.
2. Maintain the Job Set at the site of work.

C. Making entries on the Drawings:
1. Using an erasable colored pencil (not ink or indelible pencil), clearly describe the change by graphic line and note as required.
2. Date all entries.
3. Call attention to the entry by a "cloud" drawn around the area or areas affected.
4. In the event of overlapping changes, use different colors for overlapping changes.

D. Make entries in the pertinent other Documents as approved by the Architect.

E. Conversion of Schematic Layouts:
1. In some cases on the Drawings, arrangements of conduits, circuits, ducts, and similar items are shown schematically and are not intended to portray precise physical layout.
   a) Final physical arrangement is determined by the Contractor, subject to the Architect's approval.
   b) However, design of future modifications of the facility may require accurate information as to the final physical layout of items which are shown only schematically on the Drawings.

2. Show on the Job Set of Record Documents, by dimension, accurate within one inch, the centerline of each run of items such as are described in subparagraph 3.01E.1 above.
   a) Clearly identify the item by accurate note such as "cast iron drain", "galv. water", and the like.
   b) Show, by symbol or note, the vertical location of the item, such as "under slab", "in ceiling", "exposed", and the like.
   c) Make all identification sufficiently descriptive that it may be related reliably to the Specifications.

3. The Architect may waive the requirements for conversion of schematic layouts where, in the Architect's judgment, conversion serves no useful purpose. However, do not rely upon waivers being issued except as specifically issued in writing by the Architect.

3.2 FINAL PROJECT RECORD DOCUMENTS

A. The purpose of the final Project Record Documents is to provide factual information regarding all aspects of the Work, both concealed and visible, to enable future modification of the work to proceed without lengthy and expensive site measurement, investigation, and examination.

B. Approval of recorded data prior to transfer:
1. Following receipt of the drawings described in Paragraph 2.01B above, and prior to start of transfer of recorded data thereto, secure the Architect's approval of all recorded data.
2. Make required revisions.

C. Transfer of data to Drawings:
1. Carefully transfer change data shown on the Job Set of Record Drawings to the corresponding transparencies, coordinating the changes as required.
2. Clearly indicate at each affected detail and other Drawing a full description of changes made during construction, and actual location of items described in subparagraph 3.01E above.
3. Call attention to each entry by drawing a "cloud" around the area or areas affected.
4. Make changes neatly, consistently, and with the proper media to assure longevity and clear reproduction.

D. Transfer data to other Documents:
1. If the Documents other than the Drawings have been kept clean during the progress of the Work, and if entries thereon have been orderly to the approval of the Architect, the job set of those Documents other than Drawings will be accepted as final Record Documents.
2. If any such Document is not so approved by the Architect, secure a new copy of that Document from the Architect at the Architect's usual charge for reproduction and handling, and carefully transfer the change data to the new copy to the approval of the Architect.

E. Review and Submittal:
1. Submit the completed set of Project Record Documents to the Architect as described in Paragraph 1.03D above.
2. Participate in review meetings as required.
3. Make required changes and promptly deliver the final Project Record Documents to the Architect. The Architect will be responsible for delivering a copy of record documents to the Owner's Project Manager.

3.3 CHANGES SUBSEQUENT TO ACCEPTANCE

A. The Contractor has no responsibility for recording changes in the Work subsequent to Final Completion, except for changes resulting from work performed under Warranty.

END OF SECTION

01 33 23 - SHOP DRAWINGS, PRODUCT DATA AND SAMPLES

PART 1 - GENERAL

1.1 GENERAL CONDITIONS

A. Refer to paragraphs 1.2.12, and 4.2 and 3.12 of the General Conditions.

B. In the event of conflict between requirements of the General Conditions and this Section covering shop drawings, product data and samples, the requirements of Section 01 33 23 shall govern. Unaltered provisions remain in effect.

1.2 DESCRIPTION

A. Submit to the Architect shop drawings, product data and samples required by specification sections.

B. Prepare and submit the Construction Schedule, a separate schedule listing dates for submission and dates reviewed shop drawings, product data and samples will be needed for each product.

PART 2 - PRODUCTS

2.1 SHOP DRAWINGS

A. Submit one full sized “PDF” electronic copy of each drawing of certain trade shop drawings requested by Architect. Include fabrication, erection, layout and setting drawings and other such drawings as required under various sections of the specifications until final approval is obtained. Reproduction of Contract Drawings will not be used for Shop Drawings.

B. Date and mark shop drawings to show name of the Project, the Architect, Contractor, originating Subcontractor, Manufacturer or Supplier, and separate details as pertinent.

C. Completely identify on shop drawings specification section and locations at which materials or equipment are to be installed.

2.2 PRODUCT DATA

A. Submit sufficient copies of manufacturer’s descriptive data including catalog sheets for materials, equipment and fixtures, showing dimensions, performance characteristics and capacities, wiring diagram and controls, schedule and other pertinent information as required. Provide in “PDF” electronic format when available.

B. Submit brochures and other submittal data in “PDF” electric format allowing electronic distribution and reproduction. Mark product data to show the name of the Project, Architect,

Contractor, originating Subcontractor, Manufacturer or Supplier, and separate details if pertinent.

C. Completely identify on product data specification section and location at which materials or equipment are to be installed.

D. Clearly mark to show pertinent data applicable to the Project.

2.3 SAMPLES

A. Submit physical examples of materials in duplicate when required by specification sections to illustrate materials, workmanship or to establish standards by which completed work shall be judged.

B. Date samples and mark to show the name of the project, Architect, Contractor, originating Subcontractor, Manufacturer or Supplier and separate details if pertinent.

C. Completely identify on samples specification section and location in which materials or equipment are to be installed.

2.4 CONTRACTOR RESPONSIBILITIES

A. Review shop drawings, product data and samples prior to submission to the Architect.

B. Include on submittals the Contractor's stamp, initialed or signed, certifying review of submittals, verification of field dimensions and compliance with Contract Documents. Shop drawings, product data and samples not so stamped, and checked and approved by the Contractor will not be reviewed by the Architect, but will be returned to the Contractor. Shop drawings stamped and signed as approved by the Contractor but showing evidence that they have not been carefully checked by the Contractor may be returned to the Contractor to be re-checked and re-submitted to the Architect.

2.5 SUBSTITUTIONS

A. Approval required:
1. The Contract is based on the standards of quality established in the Contract Documents.
2. All products proposed for use, including those specified by required attributes and performance, require approval by the Architect before being incorporated into the Work.
3. Do not substitute materials, equipment or methods unless such substitution has been specifically approved for this Work by the Architect.
4. Product substitutions shall only be considered as outlined within the review process of specification section 01 00 00 Basic Requirements 1.60 Substitutions. Substitutions will not be considered at any time during the submittal process of the project and will be immediately rejected.

B. "Or equal":
1. Where the phrase "or equal" or "or equal as approved by the Architect" occurs in the Contract Documents, do not assume that materials, equipment or methods will be

approved as equal unless the items have been specifically approved for this Work by the Architect.

2. Substitutions shall be judged against the specified item for quality, durability, operation, appearance, and other applicable qualities including fitness for use in this situation. The decision of the Architect is final.

PART 3 - EXECUTION

3.1 SUBMISSION REQUIREMENTS

A. Schedule submissions at least two weeks before date reviewed submittals will be needed.

B. Accompany submittals with transmittal letters containing the date, project title, Contractor's name and address, number of each shop drawing, product data and samples submitted, and notification of deviation from Contract Documents.

1. Material Safety Data Sheet

Contractor shall furnish to the Architect, for review, for (4) four copies of Material Safety Data Sheets (MSDS) for all products as specified or required. Allow ample time for Architect’s comment and review.

Do not install products until confirmation of review is obtained.

MSDS copies should be included at the same submittal with shop drawings or product submittal. The following products must include the MSDS copy with the shop drawing or submittal:

a. Mechanical Insulation
b. Mastic or Adhesive
c. Ceiling Tiles or other Composite Materials
d. Sealants or Caulking
e. Materials containing or releasing volatile organic compounds (VOC’s)
f. Paints, Varnishes, Stains or other similar coatings

- The Contractor shall maintain (1) one full set of Material Safety Data Sheets at ready access on site through out the constructions duration.

2. Flame Spread Certificates

Contractor shall furnish to the Architect, for review, four (4) copies of Flame Spread Certificates for all products as specified or required.

Allow ample time for Architect’s comment and review.

Do not install products until confirmation of review is obtained.

Flame Spread Certificate copies should be included within the same submittal with shop drawings or product submittal.

3.2 RESUBMISSION REQUIREMENTS

A. Shop Drawings: Revise initial drawings as required and resubmit as specified for initial submittals. Clearly identify on drawings any changes which have been made other than those requested by the Architect.

B. Product Data and Samples: Submit new datum and samples as required for initial submittal.

3.3 DISTRIBUTION OF SHOP DRAWINGS AND SUBMITTALS

A. Contractor is still responsible for obtaining and distributing prints of shop drawings as necessary after as well as before final approval and for coordination of submittals between his subcontractors and suppliers.

B. Make prints of approved shop drawings from sepia transparencies which carry the Architect's appropriate stamp.

C. The cost of printing sepias and prints is the responsibility of the Contractor.

END OF SECTION

SECTION 01 50 00 - TEMPORARY FACILITIES AND CONTROLS

PART 1 - GENERAL

1.1 DESCRIPTION

A. Work included: Provide temporary facilities and controls needed for the work including, but not necessarily limited to:
   1. Temporary utilities such as heat, water, electricity, and telephone;
   2. Sanitary facilities;
   3. Enclosures such as tarpaulins, barricades, and canopies;
   4. Fire protective measures;
   5. Staging and scaffolding.

B. Related work:
   1. Documents affecting work of this Section include, but are not necessarily limited to, General Conditions, Supplementary Conditions, and Sections in Division 1 of these Specifications.
   2. Except that equipment furnished by subcontractors shall comply with requirements of pertinent safety regulations, such equipment normally furnished by the individual trades in execution of their own portions of the work are not part of this Section.
   3. Permanent installation and hookup of the various utility lines are described in other Sections.

1.2 PRODUCT HANDLING

A. Maintain temporary facilities and controls in proper and safe condition throughout progress of the work.

PART 2 - PRODUCTS

2.1 UTILITIES

A. Temporary Toilet Facilities
   1. Provide suitable toilet facilities, conforming with all code requirements, for use by his staff, representatives of the Owner and the Architect, and for all workmen on the job. Keep in neat and sanitary condition and provide reasonable heat during the winter months.

B. Temporary Services
   1. Water:
      a. Coordinate access to onsite services water with owner’s facilities staff.
      b. Make all connections, furnish and install all pipes and fittings, including meter, and remove all temporary materials when this service is no longer required.

c. Use due care to prevent waste of water, maintain in perfect condition at all times; pipes, hoses, valves, and connections.
d. Provide adequate drinking water satisfactorily cooled for all workmen on the job; water units shall be strategically located throughout the job.

2. Temporary Electricity:
a. Make arrangements with owner for temporary electric service, pay expenses in connection with installation and removal thereof.
b. Temporary equipment and wiring for power and lighting shall be in accordance with applicable provisions of governing codes. Temporary wiring shall be maintained in safe manner and utilized so as not to constitute a hazard to persons or property.
c. When permanent electrical power and lighting systems are in operating condition, they may be used for temporary power lighting for construction purposes, provided that Contractor obtains written approval of Architect and Owner, assumed full responsibility for entire power and lighting systems, and pays costs for operation and restoration of systems.
d. At completion of construction work or at such time as Contractor makes use of permanent electrical installation, temporary wiring, lighting and other temporary electrical equipment and devices shall be properly removed by Contractor.

2.2 STAGING AND SCAFFOLDING

A. Furnish, erect, and maintain all staging and scaffolding (exterior and interior) eight (8) feet or over in height for all trades for such use. Furnish, erect and maintain all staging and scaffolding (exterior and interior) for his own use during construction of the building. Staging and scaffolding shall be of approved design, erected and removed by experienced stage builders and shall have all accident prevention devices required by Federal, State, and Local Laws.

B. Erect such staging and scaffolding in sufficient time and in proper sequence so as not to delay work. Subcontractors shall schedule and commence their work so that building progress is not delayed or obstructed once staging and scaffolding come available.

C. Each Subcontractor entering upon the work shall furnish, erect, and maintain all staging and scaffolding under 8 feet in height required for work under his subcontract, and where so indicated all other staging and scaffolding required for his work. On completion of his work, each Subcontractor shall dismantle and remove such staging and scaffolding.

D. Erection of all staging, scaffolding, rigging, etc., shall be supervised and directed by a Licensed Rigger and inspected by a Registered Engineer. A certified affidavit shall be submitted to the Architect by this Engineer stating that all staging, scaffolding, rigging, etc., has been safely erected and conforms in all respects to State and Local Codes. The General Contractor shall pay for all services in connection with the erection and inspection of all staging, scaffolding, and rigging, etc.

E. Above facilities shall be constructed and maintained in accordance with applicable requirements of "American Standard Safety Code of Building and Construction", published by USASI, and be removed after they have served their purpose or when directed by

Architect.

F. Permanent stairs shall be erected as soon as possible and Contractor shall provide suitable temporary treads, risers, etc., as required to protect permanent stair members, and provide temporary railing as required for safety.

2.3 TEMPORARY STRUCTURES

A. The Contractor and Subcontractor shall construct and maintain, in locations approved by the Architect, all temporary structures, sheds, and similar needs for the storing of their respective materials for the duration of the Contract. The GC shall provide appropriate storage containers as required to properly store and contain project materials. The GC shall further provide (1) additional full sized storage container for dedicated use by the Owner throughout the construction process.

B. All temporary structures shall be of substantial construction and weather tight. Temporary structures shall be removed from site when no longer needed by the Contractor or trade responsible for their erection.

PART 3 - EXECUTION

3.1 FIRE PROTECTIVE MEASURES

A. The Contractor shall maintain a rubbish-free building and building site, and shall provide metal barrels into which all luncheon refuse shall be deposited. All such barrels shall have tight-fitting covers.

B. Store materials so they do not create natural pockets for papers or other combustible materials.

C. Construction debris shall not be thrown from the windows of the building but shall be removed through tight strong chutes, and all debris shall be wet down if necessary, or as directed by Architect.

D. When building materials with combustible contents are stored in the building during construction, they shall be located within easy reach of fire protection equipment.

E. An approved number of fire extinguishers shall be placed throughout work areas, temporary paint shop and within easy reach of mechanics who are operating plumber's furnaces, burning or welding apparatus. The number and location shall be approved from time to time by the local fire department.

F. It shall be the duty and responsibility of the General Contractor or any subcontractor performing any cutting or welding, to comply with the safety provisions of the national Fire Protection Association's "National Fire Codes" pertaining to such work and the respective contractor shall be responsible for all damages resulting from a failure to do so comply.

G. The contractor shall provide a continuous fire watch during any and all instances when the existing fire protection systems are down and non-functioning. Coordinate requirements and

monitoring with owner.

3.2 POLICE, FIREMEN AND INSPECTORS

A. Any police officer, fireman or inspector required by the local authorities having jurisdiction over the work, shall be employed by the Contractor and paid the standard rate or wage for the respective occupation of the work area. All personnel employed shall be covered by Workman's Compensation and Employer's Liability Insurance by the Contractor.

3.3 MAINTENANCE AND REMOVAL

A. Maintain temporary facilities and controls as long as needed for safe and proper completion of the work.

B. Remove such temporary facilities and controls as rapidly as progress of the Work will permit, or as directed by the Architect.

END OF SECTION

SECTION 01 56 00 - TEMPORARY BARRIERS, ENCLOSURES & EQUIPMENT

PART 1 - GENERAL

1.1 DESCRIPTION

A. Work included: Provide temporary facilities and controls needed for the work including, but not necessarily limited to:
   1. Enclosures such as tarpaulins, barricades, and canopies
   2. Fire protective measures
   3. Staging and scaffolding
   4. Air Filtration & exhaust
   5. Noise control
   6. Protection of patients & staff from construction dust and debris

B. Related work:
   1. Documents affecting work of this Section include, but are not necessarily limited to, General Conditions, Supplementary Conditions, and Sections in Division 1 of these Specifications.
   2. Equipment furnished by subcontractors shall comply with requirements of pertinent safety regulations. Such equipment normally furnished by the individual trades, in execution of their own portions of the work, are not part of this Section.
   3. Permanent installation and hookup of the various utility lines are described in other Sections.

1.2 PRODUCT HANDLING

A. Maintain temporary equipment and controls in proper, tight and safe condition throughout progress of the work.

PART 2 - PRODUCTS

2.1 UTILITIES

A. Temporary Services
   1. Water:
      a) Do not cut or otherwise disturb existing potable or process water lines during operating hours and without the consent of the owner’s facilities staff.
      b) Use due care to prevent water waste, maintain pipes, hoses, valves and connections in perfect condition at all times.

2.2 STAGING AND SCAFFOLDING

A. Furnish, erect, and maintain all staging and scaffolding (exterior and interior) eight (8) feet or over in height for all trades for such use. Staging and scaffolding shall be of approved design, erected and removed by experienced stage builders and shall have all accident prevention devices required by Federal, State, and Local Laws.

B. Erect such staging and scaffolding in sufficient time and in proper sequence so as not to delay work. Subcontractors shall schedule and commence their work so that building progress is not delayed or obstructed once staging and scaffolding become available.

C. Each Subcontractor shall furnish, erect, and maintain all staging and scaffolding, under 8 feet in height, required for work under his subcontract. On completion of his work, each Subcontractor shall dismantle and remove such staging and scaffolding.

D. Erection of all staging, scaffolding, rigging, etc., shall be supervised and directed by a Licensed Rigger and inspected by a Registered Engineer. A certified affidavit shall be submitted to the Architect by this Engineer stating all staging, scaffolding, rigging, etc., has been safely erected and conforms in all respects to State and Local Codes. The General Contractor shall pay for all services in connection with the erection and inspection of all staging, scaffolding, and rigging, etc.

E. Staging and scaffolding shall be constructed and maintained in accordance with applicable requirements of "American Standard Safety Code of Building and Construction", published by USASI, and be removed after they have served their purpose or when directed by Architect.

F. Permanent stairs shall be erected as soon as possible; General Contractor shall provide suitable temporary treads, risers, etc., as required, to protect permanent stair members, and provide temporary railing as required for safety.

2.3 TEMPORARY STRUCTURES & BARRIERS

A. The Contractor and Subcontractor shall construct and maintain, in locations approved by the Architect, all temporary structures, sheds, and similar needs for the storing of their respective materials for the duration of the Contract.

B. All exterior temporary structures shall be of substantial construction and weather tight. Temporary structures shall be removed from site when no longer needed by the Contractor or trade responsible for their erection.

C. Construct temporary barriers to separate the construction area from areas occupied by patients or staff. Barrier placement shall be coordinated with owner’s staff such as to avoid disrupting and interfering with the normal operations.

D. Interior temporary barriers shall consist of a minimum of 2.625” metal studs @ 24” o.c. covered with ½” gypsum drywall on both sides, and covered with 6 mil plastic on the construction activity side.

E. Interior temporary barriers shall run continuously from floor to the underside of structural deck above, and be sealed against the passage of air borne dust or contaminants.

F. Location of temporary barriers shall in no way impede means of egress and shall be so located as to minimize impacts to space functionality.

2.4 HVAC SYSTEM

A. HVAC system(s) servicing the work zone shall be temporary isolated and restricted as follows:
   1. Return air grilles within the work zone shall be sealed and or relocated outside the work zone to prevent mold, dust and debris from entering the HVAC System.
   2. Adjust the supply air diffusers; air volume (CFM) within the work zone to achieve a negative space pressure incorporating the 4 air charges per hour exhaust rate.
   3. At the completion of the work all adjustments made shall be restored to their previous conditions.
   4. Provide Negative Air conditions within all work areas to limit dust and contaminants from moving into adjacent occupied and sterile spaces.

2.5 EXHAUST

A. Provide and install temporary exhaust system to maintain negative pressure within the work zone during times of construction. The system design shall include but not limited to the following:
   1. Size and select an exhaust fan for a minimum of 4 air charges per hour.
   2. Locate fan on the exterior of building to eliminate high-pressure ductwork within the building.
   3. Exhaust discharge to atmosphere shall maintain a 20-foot radius from fresh air intakes, operable windows and public meeting areas.
   4. Install airflow-monitoring devices within the work zone to verify negative pressure and airflow to that of adjacent areas; device equal to a magnehelic gauge with pressure range from 0 to 0.25 (inches water gauge)
   5. Install low pressure flex duct to inlet of exhaust fan.
   6. Provide HEPA filters at the fan discharge if item 3 above cannot be achieved.

PART 3 - EXECUTION

3.1 DUST CONTROL MEASURES

A. Prior to commencement of any construction activity, the Owner’s Project Manager shall convene a team with the Contractor, Sub Contractors, and Architect to conduct an infection control risk assessment.

B. This risk assessment shall include the assumption that demolition activities will dislodge mold spores into the air. Temporary barriers, filters and exhausts shall be implemented to prevent mold dust from reaching occupied areas.

C. Prior to commencing demolition or construction activities in an occupied clinic, erect substantial dust tight temporary partitions to isolate the construction area from the occupied spaces.

D. Prior to commencement of demolition or construction activities, install exhaust fans to the exterior, capable of keeping the construction area under negative pressure. If it is not feasible to exhaust to the exterior, install HEPA filters before the air is returned to the HVAC system.

E. Cover all return air grilles in the construction area with an airtight barrier of plastic sheet or similar material.

F. Cover all fire detection and fire alarm devices in the construction area with airtight plastic during construction activity. Uncover such devices at night, or when construction activities are not in progress.

G. Provide Protect Tacky Mats, or equal at all openings connecting the construction area with occupied spaces.

3.2 FIRE PROTECTIVE MEASURES

A. The Contractor shall maintain a rubbish-free building and building site, and shall provide metal barrels into which all luncheon refuse shall be deposited. All such barrels shall have tight-fitting covers.

B. Store materials so they do not create natural pockets for papers or other combustible materials.

C. Construction debris shall not be thrown from the windows of the building but shall be removed through tight, strong chutes, and all debris shall be wet down if necessary, or as directed by Architect.

D. When building materials with combustible contents are stored in the building during construction, they shall be located within easy reach of fire protection equipment.

E. An approved number of fire extinguishers shall be placed throughout work areas, temporary paint shop and within easy reach of mechanics who are operating plumber's furnaces, burning or welding apparatus. The number and location shall be approved by the local fire department.

F. It shall be the duty and responsibility of the General Contractor or any subcontractor performing any cutting or welding, to comply with the safety provisions of the National Fire Protection Association's "National Fire Codes" pertaining to such work and the respective contractor shall be responsible for all damages resulting from a failure to comply.

3.3 POLICE, FIREMEN AND INSPECTORS

A. Any police officer, fireman or inspector required by the local authorities having jurisdiction over the work, shall be employed by the Contractor, and paid the standard rate or wage for the respective occupation of the work area. All personnel employed shall be covered by Workman's Compensation and Employer's Liability Insurance by the Contractor.

3.4 MAINTENANCE AND REMOVAL

A. Maintain temporary facilities and controls as long as needed for safe and proper completion of the work.

B. Remove such temporary facilities and controls as rapidly as progress of the Work will permit, or as directed by the Architect.

END OF SECTION

SECTION 01 66 00 - PRODUCT HANDLING

PART 1 - GENERAL

1.1 DESCRIPTION

A. Work included: Products scheduled for use in the Work by means including, but not necessarily limited to, those described in this Section.

B. Related Work:
1. Documents affecting work of this Section include, but are not necessarily limited to, General Conditions, Supplementary Conditions, and Sections in Division 1 of these Specifications.
2. Additional procedures also may be prescribed in other Sections of these Specifications.

1.2 QUALITY ASSURANCE

A. Include within the Contractor's quality assurance program such procedures as are required to assure full protection of work and materials.

1.3 MANUFACTURERS' RECOMMENDATIONS

A. Except as otherwise approved by the Architect and Owner, determine and comply with manufacturers' recommendations on product handling, storage and protection.

1.4 PACKAGING

A. Deliver products to the job site in their manufacturer's original container, with labels intact and legible.
1. Maintain packaged materials with seals unbroken and labels intact until time of use.
2. Promptly remove damaged material and unsuitable items from the job site, and promptly replace with material meeting the specified requirements, at no additional cost to the Owner.

B. The Owner may reject as non-complying such material and products that do not bear identification satisfactory to the Owner as to manufacturer, grade, quality and other pertinent information.

1.5 PROTECTION

A. Every precaution shall be taken to see that all building materials and equipment of all descriptions and parts of the building under construction are properly braced and secured, protected from injury by water, fire, accident, weather or other cause; both during work hours and non-working hours.

B. Furnish, erect and maintain exterior barricades, fences and all other safety protection measures required by traffic, municipal and state safety regulation. Remove all enclosures

when no longer needed.

C. All damage to materials shall be replaced at no cost to the Owner.

D. Temporary wood doors with self-closing hardware and padlocks shall be provided for exterior entrances and elsewhere as required.

E. Provide protection for all concrete and finished floors, treads, platforms and the like against mechanical damage, oil, grease, paint and other material which will stain the floor finish. Install and maintain adequate strips of Polyethylene laminated to sisal reinforced paper on finished floors where further work will be done by trades or where subject to traffic.

F. After the installation of work by a given Subcontractor is properly completed, the Contractor shall be responsible for protection and for repair, replacement or cleaning should the subject work be damaged by other trades or by any other cause. All work shall be in perfect condition at the time of final acceptance of the project.

G. Keep all access roads, walks and common corridors clear of construction equipment, materials, debris and all other items. Repair all work disturbed by construction operation and leave in as good or better condition after completion as found before new work started.

H. Protect everything on the premises from injury by water, frost, wind, fire, accident of other cause and any interference.

I. Provide ways and means to control the flow of water from every source, which may cause inconvenience or damage during the building operation.

J. All temporary protection and coverage shall be removed at the completion of the work.

1.6 REPAIRS AND REPLACEMENTS

A. In event of damage, promptly make replacements and repairs to the approval of the Architect and at no additional cost to the Owner.

B. Additional time required to secure replacements and to make repairs will not be considered by the Owner to justify an extension in the Contract Time of Completion.

1.7 BROKEN GLASS

A. The Contractor shall be responsible for all broken, scratched and cracked glass, regardless of cause and no matter by whom damaged, from the time construction has begun until the project is accepted by the Owner. He shall replace all damaged glass and deliver the entire job with all glazing intact and clean.

END OF SECTION

01 70 00 - CONTRACT CLOSEOUT

PART 1 - GENERAL

1.1 DESCRIPTION

A. Work included: Provide an orderly and efficient transfer of the completed Work to the Owner.

B. Related work:
1. Documents affecting work of this Section include, but are not necessarily limited to, General Conditions, Supplementary Conditions, and Sections in Division 1 of these Specifications.
2. Activities relative to Contract closeout are described in, but not necessarily limited to, Paragraphs 9.8, 9.9, and 9.10 of the General Conditions.
3. "Substantial Completion" is defined in Paragraph 9.8.1 of the General Conditions.

1.2 QUALITY ASSURANCE

A. Prior to requesting inspection by the Owner, use adequate means to assure that the Work is completed in accordance with the specified requirements and is ready for the requested inspection.

1.3 PROCEDURES

A. Substantial Completion:
1. Prepare and submit the punch list required by the first sentence of Paragraph 9.8.2 of the General Conditions.
2. Within a reasonable time after receipt of the list, the Owner will inspect to determine status of completion.
3. Should the Owner determine that the Work is not substantially complete:
   a) The Owner promptly will so notify the Contractor, in writing, giving the reasons therefore.
   b) Contractor shall remedy the deficiencies promptly, and notify the Owner when ready for reinspection.
   c) The Owner will reinspect the Work.

4. When the Owner concurs that the Work is substantially complete:
   a) The Architect will prepare a "Certificate of Substantial Completion" on AIA Form G704, accompanied by the Contractor's list of items to be completed or corrected, as verified by the Owner.
   b) The Architect will submit the Certificate to the Owner and to the Contractor for their written acceptance of the responsibilities assigned to them in the Certificate.

B. Final Completion:
1. Prepare and submit the notice required by the first sentence of paragraph 9.10.1 of the General Conditions.

2. Verify that the Work is complete including, but not necessarily limited to, the items mentioned in Paragraph 9.10.2 of the General Conditions.
3. Certify that:
   a) Contract Documents have been reviewed;
   b) Work has been inspected for compliance with the Contract Documents;
   c) Work has been completed in accordance with the Contract Documents;
   d) Equipment and systems have been tested as required, and are operational;
   e) Work is completed and ready for final inspection.

4. If the Contractor is not complete for any of the above requested inspections, the Contractor shall bear the cost of any subsequent inspections to examine the work not complete at previously requested inspections. Costs due Fresenius Medical Care, Inc. will include any travel costs and related direct hourly costs from the Architect, Project Manager, Chief Technician and Administrator.
5. The Owner will make an inspection to verify status of completion.
6. Should the Owner determine that the Work is incomplete or defective:
   a) The Owner promptly will so notify the Contractor, in writing, listing the incomplete or defective work.
   b) Contractor shall remedy the deficiencies promptly, and notify the Owner when ready for reinspection.

7. When the Owner determines that the work is acceptable under the Contract Documents, he will request the Contractor to make closeout submittals.

C. Closeout submittals include, but are not necessarily limited to:
1. Project Record Documents described in Section 01 32 00;
2. Complete operation and maintenance manuals, and data for items so listed in pertinent other Sections of these Specifications, and for other items when so directed by the Owner; Two copies of these documents shall be submitted on CD in electronic (PDF) format.
3. Warranties and bonds; Submit one project binder containing all warranty documentation for all materials utilized for the project.
5. Evidence of compliance with requirements of governmental agencies having jurisdiction including, but not necessarily limited to:
   a) Certificates of Inspection;
   b) Certificates of Occupancy;
6. Certificates of Insurance for products and completed operations;
7. Evidence of payment and release of liens (see Lien Release Form at the end of this Section);
8. List of Subcontractors, service organizations, and principal vendors, including names, addresses, and telephone numbers where they can be reached for emergency service at all times including nights, weekends and holidays.
9. Project data catalog sheets and shop drawing approved and returned by architect described in section 01 33 23.
10. Item numbers 2, 3, 6, 7, 8, 9 and 10 above shall be tabulated and bound into one (1) three ring binder with the project name firmly affixed to the binder spline. Note; Two (2) total bound binders due at end of project. (1) full electronic version shall be provided on CD.

D. Final adjustment of accounts:

1. Submit a final statement of accounting to the Owner, showing all adjustments to the Contract Sum.
2. If so required, the Owner will prepare a final Change Order showing adjustments to the Contract Sum which were not made previously by Change orders.

1.2 INSTRUCTION

A. Provide training and introduction for the Owner's personnel in proper operation and maintenance of all systems and equipment, after acceptance of Operation and Maintenance Manual. Provide at the Final Completion walkthrough a schedule of such training, allowing the following time periods:

Various systems and system facilities tie-in related to the general space operation and equipment use – 1-hour.

It is intended for all system to be reviewed with owner's personnel on one complete day prior to the opening and operation of the facility.

CONDITIONAL AFFIDAVIT AND WAIVER OF LIEN

STATE OF: _____

COUNTY OF: _____

_____, being duly sworn upon his oath, deposed and says:

That he makes this Affidavit on behalf of _____ having heretofore entered into an Agreement with DFD Russell Medical Center for_____ in connection with _____located at _____ _____, that all labor, materials, and services committed for have been fully paid and indebtedness discharged to date of this Affidavit.

Upon receipt of the outstanding balance of the contract in the sum of _____ Dollars ($_____) the undersigned does hereby waive, release and relinquish all rights of lien which the undersigned may now have upon the premises above described for labor and material, general supervision, of construction of alterations and/or otherwise.

FURTHERMORE, the undersigned will hold DFD Russell Medical Center harmless, and pay any judgments or settlements, resulting from lien(s) filed by any supplier of materials or labor in connection with the above referenced project.

_____
COMPANY

By: _____

SUBSCRIBED IN MY PRESENCE AND SWORN TO BEFORE ME THIS _____ day of _ _____, 20_____.

_____
Notary Public

My commission expires:

END OF SECTION

01 74 13 – CLEANING

PART 1 - GENERAL

1.1 DESCRIPTION

A. Work included: Throughout the construction period, maintain the building, work area and site in a standard of cleanliness as described in this Section.

B. Related work:
1. Documents affecting work of this Section include, but are not necessarily limited to, General Conditions, Supplementary Conditions, and Sections in Division 1 of these Specifications.
2. In addition to standards described in this Section, comply with requirements for cleaning as described in pertinent other Sections of these Specifications.

1.2 QUALITY ASSURANCE

A. Conduct daily inspection, and more often if necessary, to verify that requirements for cleanliness are being met.

B. In addition to the standards described in this Section, comply with pertinent requirements of governmental agencies having jurisdiction.

PART 2 - PRODUCTS

2.1 CLEANING MATERIALS AND EQUIPMENT

A. Provide required personnel, equipment, and materials needed to maintain the specified standard of cleanliness.

2.2 COMPATIBILITY

A. Use only the cleaning materials and equipment which are compatible with the surface being cleaned, as recommended by the manufacturer of the material.

PART 3 - EXECUTION

3.1 PROGRESS CLEANING

A. General:
1. Retain stored items in an orderly arrangement allowing maximum access, not impeding traffic or drainage, and providing required protection of materials.

2. Do not allow accumulation of scrap, debris, waste material, and other items not required for construction of this Work.
3. Once per day, and more often if necessary and required by the Owner, completely remove all scrap, debris, and waste material from the job site.
4. Provide adequate storage for all items awaiting removal from the job site, observing requirements for fire protection and protection of the ecology.

B. Site:
1. Daily, and more often if necessary, inspect the site and pick up all scrap, debris, and waste material. Remove such items to the place designated for their storage.
2. Weekly, and more often if necessary, inspect all arrangements of materials stored on the site. Restack, tidy, or otherwise service arrangements to meet the requirements of subparagraph 3.01-A-1 above.
3. Maintain the site in a neat and orderly condition at all times.

C. Structures:
1. Weekly, and more often if necessary, inspect the structures and pick up all scrap, debris, and waste material. Remove such items to the place designated for their storage.
2. Weekly, and more often if necessary, sweep interior spaces clean.
   a. "Clean," for the purpose of this subparagraph, shall be interpreted as meaning free from dust and other material capable of being removed by use of reasonable effort and a hand-held broom.

3. As required preparatory to installation of succeeding materials, clean the structures or pertinent portions thereof to the degree of cleanliness recommended by the manufacturer of the succeeding material, using equipment and materials required to achieve the necessary cleanliness.
4. Following the installation of finish floor materials, clean the finish floor daily (and more often if necessary) at all times while work is being performed in the space in which finish materials are installed.
   a. "Clean," for the purpose of this subparagraph, shall be interpreted as meaning free from foreign material which, in the opinion of the Owner, may be injurious to the finish floor material.

5. For work performed on continuously operated facilities, premises shall be cleaned on a daily basis and more often as necessary in order to maintain premises free of dust. In these instances clean shall be interpreted as meaning free from dust and other material capable of being removed by use of reasonable effort and a hand held wet mop.

3.2 FINAL CLEANING

A. "Clean," for the purpose of this Article, and except as may be specifically provided otherwise, shall be interpreted as meaning the level of cleanliness generally provided by skilled cleaners using commercial quality building maintenance equipment and materials.

B. Prior to completion of the Work, remove from the job site all tools, surplus materials, equipment, scrap, debris, and waste. Conduct final progress cleaning as described in Article

3.01 above.

C. Site:
1. Unless otherwise specifically directed by the Architect, broom clean paved areas on the site and public paved areas adjacent to the site.
2. Completely remove the resultant debris.

D. Structures:
1. Exterior:
a. Visually inspect exterior surfaces and remove all traces of soil, waste materials, smudges, and other foreign matter.
b. Remove all traces of splashed materials from adjacent surfaces.
c. If necessary to achieve a uniform degree of cleanliness, hose down the exterior of the structure.
d. In the event of stubborn stains not removable with water, the Owner may require light sandblasting or other cleaning at no additional cost to the Owner.

E. Schedule final cleaning as approved by the Owner. Provide to the Owner a completely cleaned limit of work area.

3.3 CLEANING DURING OWNER'S OCCUPANCY

A. Should the Owner occupy the Work or any portion thereof prior to its completion by the Contractor and acceptance by the Owner, responsibilities for interim and final cleaning shall be as determined by the Owner in accordance with the General Conditions of the Contract.

END OF SECTION

01 74 19 - CONSTRUCTION WASTE MANAGEMENT AND DISPOSAL

PART 1 - GENERAL

1.1 SUMMARY

A. This Section includes administrative and procedural requirements for salvaging, recycling and disposing of construction waste.

1.2 RELATED SECTIONS

A. Section 01 50 00 - TEMPORARY FACILITIES AND CONTROLS:
   1. Environmental-protection measures during construction.

B. Section 02 41 19 – SELECTIVE DEMOLITION:
   1. Demolition and selective demolition activities.

1.3 DEFINITIONS

A. Asphalt Pavement, Brick, and Concrete (ABC) Rubble: Rubble that contains only weathered (cured) asphalt pavement, clay bricks and attached mortar normally used in construction, or concrete that may contain rebar. The rubble shall not be mixed with, or contaminated by, another waste or debris.

B. Construction Waste: Building and site improvement materials and other solid waste resulting from construction, remodeling, renovation, or repair operations. Construction waste includes packaging.

C. Demolition Waste: Building and site improvement materials resulting from demolition or selective demolition operations.

D. Disposal: Removal off-site of demolition and construction waste and subsequent sale, recycling, reuse, or deposit in landfill or incinerator acceptable to authorities having jurisdiction.

E. Recycle: Diversion of demolition and construction waste from the landfill for reuse.

F. Salvage: Recovery of demolition or construction waste and subsequent sale or reuse in another facility.

G. Salvage for Reuse: Recovery of demolition or construction waste and subsequent incorporation into the Work.

1.4 PERFORMANCE REQUIREMENTS

A. General: Develop waste management plan to meet requirements of authority having jurisdiction and that results in end-of-Project rates for salvage/recycling of 75 percent by weight of total waste generated by the Work.

B. Salvage/Recycle Requirements: Salvage and recycle as much non-hazardous demolition and construction waste as possible including the following materials:

1. Demolition Waste:
   a. Concrete and concrete reinforcing steel.
   b. Brick and concrete masonry units.
   c. Wood studs, wood joists, plywood, oriented strand board, paneling and trim.
   d. Structural steel, miscellaneous steel and rough hardware.
   e. Roofing.
   f. Insulation.
   g. Metal studs.
   h. Gypsum board (new unpainted scrap).
   i. Acoustical tile and panels.
   j. Equipment.
   k. Plumbing fixtures, piping, supports, hangers, valves and sprinklers.
   l. Mechanical equipment and refrigerants.
   m. Electrical conduit, copper wiring, lighting fixtures, lamps, and ballasts.

2. Construction Waste:
   a. Concrete and concrete reinforcing steel.
   b. Masonry and CMU.
   c. Lumber, wood sheet materials and wood trim.
   d. Metals.
   e. Roofing.
   f. Insulation.
   g. Gypsum board.
   h. Piping.
   i. Wire and cable
   j. Electrical conduit.
   k. Packaging: 100 percent of the following uncontaminated packaging materials: Paper, cardboard, boxes, plastic sheet and film, polystyrene packaging, wood crates, plastic pails.

C. In the event the Contractor encounters previously unidentified material that is reasonably believed to be hazardous, asbestos containing, coated with lead-based paint, or oily debris, the Contractor shall immediately stop work in the affected area and report the condition to the Architect. At no time shall such material be handled or disposed of by the Contractor. The Contractor agrees to cooperate with the Owner and any consultants engaged by Owner to perform services with respect to the analysis, detection, removal, containment, treatment and disposal of such regulated materials.

1.5 QUALITY ASSURANCE

A. Waste Management Coordinator Qualifications: LEED Accredited Professional by U.S. Green Building Council, or three years documented experience with construction waste management activities.

B. Refrigerant Recovery Technician Qualifications: Certified by EPA-approved certification program, using recycling/recovery equipment that has a current EPA Registration.

C. Regulatory Requirements: Comply with hauling and disposal regulations of authorities having jurisdiction.

D. Waste Management Conference: Conduct conference at Project site. Review methods and procedures related to waste management including, but not limited to, the following:
   1. Review and discuss waste management plan including responsibilities of Waste Management Coordinator.
   2. Review requirements for documenting quantities of each type of waste and its disposition.
   3. Review and finalize procedures for materials separation and verify availability of containers and bins needed to avoid delays.
   4. Review procedures for periodic waste collection and transportation to recycling and disposal facilities.
   5. Review waste management requirements for each trade.
   6. Provide recycling education and recycling information to Contractor and subcontractor employees working on the project.

1.6 WASTE MANAGEMENT PLAN

A. General: Develop plan consisting of waste identification, waste reduction work plan, and cost/revenue analysis. Include separate sections in plan for demolition and construction waste. Indicate quantities by weight throughout waste management plan.

B. Waste Identification: Indicate anticipated types and quantities of demolition, site-clearing and construction waste generated by the Work. Include estimated quantities and assumptions for estimates.

C. Waste Reduction Work Plan: List each type of waste and whether it will be salvaged, recycled, or disposed of in landfill or incinerator. Include points of waste generation, total quantity of each type of waste, quantity for each means of recovery, and handling and transportation procedures.
   1. Salvaged Materials for Reuse: For materials that will be salvaged and reused in this Project, describe methods for preparing salvaged materials before incorporation into the Work.
   2. Salvaged Materials for Sale: For materials that will be sold to individuals and organizations, include list of their names, addresses, and telephone numbers.
   3. Salvaged Materials for Donation: For materials that will be donated to individuals and organizations, include list of their names, addresses, and telephone numbers.

4. Recycled Materials: Include list of local receivers and processors and type of recycled materials each will accept. Include names, addresses, and telephone numbers.
5. Disposed Materials: Indicate how and where materials will be disposed of. Include name, address, and telephone number of each landfill and incinerator facility.
6. Handling and Transportation Procedures: Include method that will be used for separating recyclable waste including sizes of containers, container labeling, and designated location on Project site where materials separation will be located.

D. Cost/Revenue Analysis: Indicate total cost of waste disposal as if there was no waste management plan and net additional cost or net savings resulting from implementing waste management plan. Include the following:
1. Total quantity of waste.
2. Estimated cost of disposal (cost per ton). Include hauling and tipping fees and rental cost of collection containers for each type of waste.
3. Total cost of disposal (with no waste management).
4. Revenue from salvaged materials.
5. Revenue from recycled materials.
6. Savings in hauling and tipping fees by donating materials.
7. Savings in hauling and tipping fees that are avoided.
8. Handling and transportation costs. Include cost of collection containers for each type of waste.
9. Net additional cost or net savings from waste management plan.

PART 2 - PRODUCTS (Not Used)

PART 3 - EXECUTION

3.1 PLAN IMPLEMENTATION

A. General: Implement waste management plan as approved by the Owner. Provide containers, storage, signage, transportation, and other items as required to implement waste management plan during the entire duration of the Contract.

B. Waste Management Coordinator: Engage a waste management coordinator to be responsible for implementing, monitoring, and reporting status of waste management work plan.

C. Training: Train workers, subcontractors, and suppliers on proper waste management procedures, as appropriate for the Work occurring at Project site.
1. Distribute waste management plan to everyone concerned within three days of submittal return.
2. Distribute waste management plan to entities when they first begin work on-site. Review plan procedures and locations established for salvage, recycling, and disposal.
3. Provide recycling education for all workers, subcontractors and suppliers engaged in on-site activities.
4. Distribute recycling educational literature.

5. Provide appropriate recycling signage for containers and workspaces.

D. Site Access and Temporary Controls: Conduct waste management operations to ensure minimum interference with roads, streets, walks, walkways, and other adjacent occupied and used facilities.
1. Designate and label specific areas on Project site necessary for separating materials that are to be salvaged, recycled, reused, donated, and sold.
2. Comply with project requirements for controlling dust and dirt, environmental protection, and noise control.

3.2 SALVAGING DEMOLITION WASTE

A. Salvaged Items for Reuse in the Work:
1. Clean salvaged items.
2. Pack or crate items after cleaning. Identify contents of containers.
3. Store items in a secure area until installation.
4. Protect items from damage during transport and storage.
5. Install salvaged items to comply with installation requirements for new materials and equipment. Provide connections, supports, and miscellaneous materials necessary to make items functional for use indicated.

B. Salvaged Items for Sale and Donation: Sale not permitted on Project site. Labor for loading donated items acceptable to local trade practices; union labor if applicable.

C. Salvaged Items for Owner's Use:
1. Clean salvaged items.
2. Pack or crate items after cleaning. Identify contents of containers.
3. Store items in a secure area until delivery to Owner.
4. Transport items to Owner's storage area off-site.
5. Protect items from damage during transport and storage.

D. Doors and Hardware: Brace open end of door frames. Except for removing door closers, leave door hardware attached to doors.

3.3 RECYCLING DEMOLITION AND CONSTRUCTION WASTE, GENERAL

A. General: Recycle paper and beverage containers used by on-site workers.

B. Recycling Incentives: Revenues, savings, rebates, tax credits, and other incentives received for recycling waste materials shall accrue to the Owner

C. Procedures: Separate recyclable waste from other waste materials, trash, and debris. Separate recyclable waste by type at Project site to the maximum extent practical. For waste which cannot be separated at Project site, co-mingle only with waste which is to be separated later at a recycling facility. Contamination of recycling containers with trash or other contaminants is subject to a penalty of $750.00 per container, payable to the Owner.
1. Provide appropriately marked containers or bins for controlling recyclable waste until they are removed from Project site. Include list of acceptable and unacceptable materials at each container and bin. Inspect containers and bins for contamination and remove contaminated materials if found.

2. Stockpile processed materials on-site without intermixing with other materials. Place, grade, and shape stockpiles to drain surface water. Cover to prevent windblown dust.
3. Stockpile materials away from construction area. Do not store within drip line of remaining trees.
4. Store components off the ground and protect from the weather.
5. Remove recyclable waste off Owner's property and transport to recycling receiver or processor.

D. On-site crushing of asphalt pavement, brick, and concrete (ABC) rubble is not allowed. All ABC waste must be transported off-site to an asphalt batching plant or to an ABC crushing or recycling operation that has been sited and permitted for that purpose.

3.4 RECYCLING DEMOLITION WASTE

A. Concrete: Deposit all debris in designated container to be transported to approved aggregate recycling facility to be crushed and screened for use as satisfactory soil for fill or sub-base.

B. Masonry: Deposit all masonry debris in designated container to be transported to approved aggregate recycling facility to be. crushed and screened for use as satisfactory soil for general fill or satisfactory soil for fill or sub-base. Clean and stack undamaged whole masonry units on wood pallets for reuse.

C. Wood Materials: Sort and stack salvageable members according to size, type, and length. Separate lumber waste and deposit into appropriate container. Separate engineered wood products, panel products, and treated wood materials into designated containers.

D. Metals: Separate metals by type if practical. Stack salvageable structural steel members according to size, type of member, and length.

E. Gypsum Board: Deposit clean gypsum scrap into appropriate containers. Protect from weather. Remove edge trim and sort with other metals. Remove and dispose of fasteners and other contaminants.

F. Acoustical Ceiling Panels and Tile: Stack large clean pieces on wood pallets, stretch wrap and store in a dry location. Separate suspension system, trim, and other metals from panels and tile and sort with other metals.

G. Plumbing Fixtures: Separate by type and size fixtures suitable for reuse. Deposit all other fixtures into designated containers by material type to be transported to approved recycling facility.

H. Piping: Separate piping materials by material composition. Deposit in designated containers. Separate supports, hangers, valves, sprinklers, and other components by material type and deposit in designated containers for transport to approved recycling facility.

I. Lighting Fixtures: Separate lamps by type and protect from breakage.

J. Electrical Devices: Separate switches, receptacles, switchgear, transformers, meters, panelboards, circuit breakers, and other devices by type.

K. Conduit: Deposit conduit and fittings into designated container.

3.5 RECYCLING CONSTRUCTION WASTE

A. Packaging:
1. Cardboard and Boxes: Break down packaging into flat sheets. Bundle and store in a dry location.
2. Polystyrene Packaging: Separate and bag materials.
3. Pallets: As much as possible, require deliveries using pallets to remove pallets from Project site. For pallets that remain on-site, break down pallets into component wood pieces and comply with requirements for recycling wood.
4. Crates: Break down crates into component wood pieces and comply with requirements for recycling wood.

B. Site-Clearing Wastes: Chip brush, branches, and trees on-site.

C. Concrete: Deposit all debris in designated container to be transported to approved aggregate recycling facility to be crushed and screened for use as satisfactory soil for fill or sub-base.

D. Masonry: Deposit all masonry debris in designated container to be transported to approved aggregate recycling facility to be. Crushed and screened for use as satisfactory soil for general fill or satisfactory soil for fill or sub-base. Clean and stack undamaged whole masonry units on wood pallets for reuse.

E. Metals: Separate metals by material type if practical. Stack salvageable structural steel members according to size, type of member, and length.

F. Wood Materials:
1. Clean Cut-Offs of Lumber: Deposit into designated clean wood container to be transported to designate recycling facility for use as mulch or bio-fuel.
2. Clean Sawdust: Bag sawdust that does not contain painted or treated wood.

G. Clean Gypsum Board: Deposit scraps of clean gypsum board into designated container protected from weather and transport to appropriate gypsum recycling facility to be processed into new gypsum board.

3.6 DISPOSAL OF WASTE

A. General: Except for items or materials to be salvaged, recycled, or otherwise reused, remove waste materials from Project site and legally dispose of them in a landfill or incinerator acceptable to authorities having jurisdiction.
1. Except as otherwise specified, do not allow waste materials that are to be disposed of accumulate on-site.
2. Remove and transport debris in a manner that will prevent spillage on adjacent surfaces and areas.

3. For solid waste disposal facilities, dispose of materials only in facilities which currently comply with applicable local regulations.

B. Burning: Do not burn waste materials.

C. Disposal: Transport waste materials off the property and legally dispose of waste materials.

END OF SECTION

02 41 19 - SELECTIVE DEMOLITION

PART 1 - GENERAL

1.1 DESCRIPTION OF WORK

A. Work Included:
1. Demolition and removal of selected portions of buildings and structures and as required for new work. Refer to the Drawings for additional requirements.
2. Salvage of existing items to be reused or turned over to the facility.
3. Removal and legal disposal of demolished materials off site. Except those items specifically designated to be relocated, reused, or turned over to the facility, all existing removed materials, items, trash and debris shall become property of the Contractor and shall be completely removed from the site and legally disposed of at their expense. Salvage value belongs to the Contractor. On-site sale of materials is not permitted.
4. Demolition and removal work shall properly prepare for alteration work and new construction to be provided under the Contract.
5. Scheduling and sequencing operations without interrupt utilities serving occupied areas. If interruption is required, obtain written permission from the utility company and the Owner. Provide temporary services as necessary to serve occupied and usable facilities when permanent utilities must be interrupted, or schedule interruption when the least amount of inconvenience will result.

B. Related Work: The following items are not included in this Section and will be performed under the designated Sections:
1. Section 01 32 00 – RECORD DOCUMENTS
2. Section 01 50 00 - TEMPORARY FACILITIES AND CONTROLS:
   a. Maintenance of access, cleaning during construction, dust and noise control.

3. Section 01 74 19 - CONSTRUCTION WASTE MANAGEMENT:
   a. Waste management and recycling.

4. Division 21 - FIRE PROTECTION:
   a. Disconnecting, capping and otherwise making inactive existing mechanical services in areas where demolition and removal work is required. Mechanical tradesmen will disconnect, cap, inactivate and lower to floor such items where required to be removed. Removal and storage of such materials shall be then completed under this Section.
   b. Disconnect and reinstallation of fire protection equipment temporarily interrupted during construction.

5. Division 22 - PLUMBING:
   a. Disconnecting, capping and otherwise making inactive existing mechanical services in areas where demolition and removal work is required. Mechanical tradesmen will disconnect, cap, inactivate and lower to floor such items where required to be removed. Removal and storage of such materials shall be then completed under this Section.

b. Disconnect and reinstallation of plumbing equipment temporarily interrupted during construction.

6. Division 23 - HEATING, VENTILATING AND AIR CONDITIONING:
   a. Disconnecting, capping and otherwise making inactive existing mechanical services in areas where demolition and removal work is required. Mechanical tradesmen will disconnect, cap, inactivate and lower to floor such items where required to be removed. Removal and storage of such materials shall be then completed under this Section.
   b. Disconnect and reinstallation of HVAC equipment temporarily interrupted during construction.

7. Division 26 - ELECTRICAL WORK:
   a. Disconnecting, capping and otherwise making inactive existing electrical services in areas where demolition and removal work is required. Electrical tradesmen will disconnect, cap, inactivate and lower to floor such items where required to be removed. Removal and storage of such materials shall be then completed under this Section.
   b. Disconnect and reinstallation of electrical equipment temporarily interrupted during construction. Coordinate with Owner such as to avoid disruption to normal operations.

1.2 DEFINITIONS

A. Remove: Detach items from existing construction and legally dispose of them off-site, unless indicated to be removed and salvaged or removed and reinstalled.

B. Remove and Salvage: Detach items from existing construction and deliver them to the Owner ready for reuse, at a location designated by the Owner. Protect from weather until accepted by Owner.

C. Remove and Reinstall: Detach items from existing construction, prepare them for reuse, and reinstall them where indicated. Protect from weather until reinstallation.

D. Existing to Remain: Existing items of construction that are not to be removed and that are not otherwise indicated to be removed, removed and salvaged, or removed and reinstalled.

1.3 MATERIALS OWNERSHIP

A. Historic items, relics, and similar objects including, but not limited to, cornerstones and their contents, commemorative plaques, antiques, and other items of interest or value that may be encountered during selective demolition remain property of the Owner. Carefully remove each item or object in a manner to prevent damage and deliver promptly to a location acceptable to the Owner.

1.4 SUBMITTALS

A. Schedule of Selective Demolition Activities: Indicate the following:

1. Detailed sequence of selective demolition and removal work, with early and late starting and finishing dates for each activity. Ensure Owner's on-site operations are uninterrupted if applicable.
2. Interruption of utility services. Indicate how long utility services will be interrupted.
3. Coordination for shutoff, capping, and continuation of utility services.
4. Locations of proposed dust- and noise-control temporary partitions and means of egress, including for other occupants affected by selective demolition operations.
5. Coordination of Owner's continuing occupancy of portions of existing building and of Owner's partial occupancy of completed Work.
6. Means of protection for items to remain and items in path of waste removal from building.

B. Inventory: After selective demolition is complete, submit a list of items that have been removed and salvaged, and turned over the Owner.

C. Pre-demolition Videotapes: Show existing conditions of adjoining construction and site improvements, including finish surfaces that might be misconstrued as damage caused by selective demolition operations. Comply with Division 01. Submit before Work begins.

D. Landfill Records: Provide trip tickets (receipts) indicating receipt and acceptance of hazardous wastes by a landfill facility licensed to accept hazardous wastes.
1. Comply with submittal requirements in Section 01 74 19 - CONSTRUCTION WASTE MANAGEMENT AND DISPOSAL.

1.5 QUALITY ASSURANCE

A. Examination of Existing Conditions: The Contractor shall examine the Contract Drawings for demolition and removal requirements and provisions for new work. Verify all existing conditions and dimensions before commencing work. The Contractor shall visit the site and examine the existing conditions as he finds them and shall inform herself/himself of the character, extent and type of demolition and removal work to be performed. Submit any questions regarding the extent and character of the demolition and removal work in the manner and within the time period established for receipt of such questions during the bidding period.

B. Demolition Firm Qualifications: An experienced firm that has specialized in demolition work similar in material and extent to that indicated for this Project.

C. Regulatory Requirements: Comply with governing EPA notification regulations before beginning selective demolition. Comply with hauling and disposal regulations of authorities having jurisdiction.

D. Standards: Comply with ANSI A10.6 and NFPA 241.

E. Pre-demolition Conference: Conduct conference at Project site to review methods and procedures related to selective demolition including, but not limited to, the following:
1. Inspect and discuss condition of construction to be selectively demolished.
2. Review structural load limitations of existing structure.

3. Review and finalize selective demolition schedule and verify availability of materials, demolition personnel, equipment, and facilities needed to make progress and avoid delays.
4. Review requirements of work performed by other trades that rely on substrates exposed by selective demolition operations.
5. Review areas where existing construction is to remain and requires protection.
6. Review the requirements of work conducted within operational clinics.

F. Handle waste materials in accordance with 01 74 19 – Construction Waste Management.

1.6 WARRANTY

A. Existing Warranties: Remove, replace, patch, and repair materials and surfaces cut or damaged during selective demolition, by methods and with materials so as not to void existing warranties.

PART 2 - PRODUCTS (Not Used)

PART 3 - EXECUTION

3.1 EXAMINATION

A. Verify that utilities have been disconnected and capped.

B. Survey existing conditions and correlate with requirements indicated to determine extent of selective demolition required.

C. Inventory and record the condition of items to be removed and reinstalled and items to be removed and salvaged.

D. When unanticipated mechanical, electrical, or structural elements that conflict with intended function or design are encountered, investigate and measure the nature and extent of conflict. Promptly submit a written report to Architect.

E. Engage a professional engineer licensed by the local authorities having jurisdiction to survey condition of building to determine whether removing any element might result in structural deficiency or unplanned collapse of any portion of structure or adjacent structures during selective demolition operations.

F. Survey of Existing Conditions: Record existing conditions by use of pre-construction videotapes.
1. Before selective demolition or removal of existing building elements that will be reproduced or duplicated in final Work, make permanent record of measurements, materials, and construction details required to make exact reproduction.

G. Perform surveys as the Work progresses to detect hazards resulting from selective demolition activities.

3.2 UTILITY SERVICES AND MECHANICAL/ELECTRICAL SYSTEMS

A. Service/System Requirements: Locate, identify, disconnect, and seal or cap off indicated utility services and mechanical/electrical systems serving areas to be selectively demolished.
   1. Arrange to shut off indicated utilities with utility companies and Owner.
   2. If services/systems are required to be removed, relocated, or abandoned, before proceeding with selective demolition provide temporary services/systems that bypass area of selective demolition and that maintain continuity of services/systems to other parts of building.
   3. Cut off pipe or conduit in walls or partitions to be removed. Cap, valve, or plug and seal remaining portion of pipe or conduit after bypassing. Where entire wall is to be removed, existing services/systems may be removed with removal of the wall.
   4. Prior to commencing cutting work in existing surfaces, take all precautionary measures to assure that mechanical and electrical services to the particular area have been made inactive. Coordinate with Fire Protection, Plumbing, HVAC, and Electrical subcontractors. Only licensed tradesmen of that particular trade shall disconnect and cap existing mechanical and electrical items that are to be removed, abandoned and/or relocated.
   5. If, during the process of cutting work, existing utility lines are encountered which are not indicated on the Drawings, regardless of their condition, immediately report such items to the Architect. Do not proceed with work in such areas until instructions are issued by the Architect. Continue work in other areas.

3.3 PREPARATION

A. Site Access and Temporary Controls: Conduct selective demolition and debris-removal operations to ensure minimum interference with roads, streets, walks, walkways, and other adjacent occupied and used facilities.
   1. Comply with requirements for access and protection specified in Section 01 50 00 - TEMPORARY FACILITIES AND CONTROLS.
   2. Maintain adequate passage to and from all exits at all times. Before any work is done which significantly alters access or egress patterns, consult with the Architect and obtain approval of code required egress. Under no condition block or interfere with the free flow of people at legally required exits, or in any way alter the required condition of such exits.

B. Temporary Shoring: Provide and maintain shoring, bracing, and structural supports as required to preserve stability and prevent movement, settlement, or collapse of construction and finishes to remain, and to prevent unexpected or uncontrolled movement or collapse of construction being demolished.
   1. Strengthen or add new supports when required during progress of selective demolition.
   2. Remove temporary shoring, bracing and structural supports when no longer required.
   3. Post warning signs and place barricades as applicable during placement and removal of temporary shoring.

C. Conduct demolition operations to prevent injury to people and damage to adjacent buildings and facilities to remain. Ensure safe passage of people around demolition area(s).

1. Erect temporary protection, such as walks, fences, railings, canopies, and covered passageways, where required by authorities having jurisdiction. Provide temporary barricades as required to limit access to demolition areas.
2. Protect existing site improvements, appurtenances, and landscaping to remain.

D. Drain, purge, or otherwise remove, collect, and dispose of chemicals, gases, explosives, acids, flammables, or other dangerous materials before proceeding with demolition operations.

3.4 SELECTIVE DEMOLITION, GENERAL

A. General: Demolish and remove existing construction only to the extent required by new construction and as indicated. Use methods required to complete the Work within limitations of governing regulations and as follows:
1. For operational facilities, the Contractor shall coordinate with the facility staff and schedule operations such that they will cause the least disruption to patient treatment. Operations that create excessive noise, odors, dust and debris shall be conducted during non-treatment hours.
2. Proceed with selective demolition systematically, from higher to lower level. Complete selective demolition operations above each floor or tier before disturbing supporting members on the next lower level.
3. Neatly cut openings and holes plumb, square, and true to dimensions required. Use cutting methods least likely to damage construction to remain or adjoining construction. Use hand tools or small power tools designed for sawing or grinding, not hammering and chopping, to minimize disturbance of adjacent surfaces. Temporarily cover openings to remain.
4. Cut or drill from the exposed or finished side into concealed surfaces to avoid marring existing finished surfaces.
5. Do not use cutting torches until work area is cleared of flammable materials. At concealed spaces, such as duct and pipe interiors, verify condition and contents of hidden space before starting flame-cutting operations. Maintain fire watch and portable fire-suppression devices during flame-cutting operations.
6. Maintain adequate ventilation when using cutting torches.
7. Remove decayed, vermin-infested, or otherwise dangerous or unsuitable materials and promptly dispose of off-site.
8. Remove structural framing members and lower to ground by method suitable to avoid free fall and to prevent ground impact or dust generation.
9. Locate selective demolition equipment and remove debris and materials so as not to impose excessive loads on supporting walls, floors, or framing.
10. Dispose of demolished items and materials promptly. Comply with requirements in Section 01 74 19 - CONSTRUCTION WASTE MANAGEMENT AND DEMOLITION.

B. Removed and Salvaged Items:
1. Clean salvaged items.
2. Pack or crate items after cleaning. Identify contents of containers.
3. Store items in a secure area until delivery to Owner.
4. Transport items to storage area designated by the Owner.
5. Protect items from damage during transport and storage.

C. Removed and Reinstalled Items:
   1. Clean and repair items to functional condition adequate for intended reuse. Paint equipment to match new equipment.
   2. Pack or crate items after cleaning and repairing. Identify contents of containers.
   3. Protect items from damage during transport and storage.
   4. Reinstall items in locations indicated. Comply with installation requirements for new materials and equipment. Provide connections, supports, and miscellaneous materials necessary to make item functional for use indicated.

D. Existing Items to Remain: Protect construction indicated to remain against damage and soiling during selective demolition. When permitted by Architect, items may be removed to a suitable, protected storage location during selective demolition and cleaned and reinstalled in their original locations after selective demolition operations are complete.

E. Items for Re-use and Preservation of Existing Surfaces to Remain:
   1. The Contractor shall inspect closely each item specifically designated to be relocated, re-used, or turned over to the Owner prior to its removal, and immediately report damages and defects to the Architect and Owner. The Contractor shall be responsible for any subsequent damage to the same other than latent defects not readily apparent from close inspection, and shall bear responsibility for its repair or same replacement as directed by the Architect, to the satisfaction of the Owner.
   2. Unless special surface preparation is specified under other Specification Sections, leave existing surfaces that are to remain in a condition suitable to receive new materials and/or finishes.

3.5 PROTECTION OF PUBLIC AND PROPERTY

A. Provide all measures required by federal, state and municipal laws, regulations, and ordinances for the protection of surrounding property, the public, workmen, and Commonwealth's employees during all demolition and removal operations. Measures are to be taken, but not limited to installation of sidewalks, sheds, barricades, fences, warning lights and signs, trash chutes and temporary lighting.

B. Protect all walks, roads, streets, curbs, pavements, trees and plantings, on and off premises, and bear all costs for correcting such damage as directed by the Architect, and to the satisfaction of the Owner.

C. Demolition shall be performed in such a manner that will ensure the safety of adjacent property. Protect adjacent property from damage and protect persons occupying adjacent property from injuries which might occur from falling debris or other cause and so as not to cause interference with the use of other portions of the building, of adjacent buildings or the free access and safe passage to and from the same.

D. Every precaution shall be taken to protect against movement or settlement of the building, of adjacent buildings, sidewalks, roads, streets, curbs and pavements. Provide and place at the Contractor's own expense, all necessary bracing and shoring in connection with demolition and removal work.

E. Remove portions of structures with care by using tools and methods that will not transfer heavy shocks to existing and adjacent building structures, both internal and external of the particular work area.

F. Provide and maintain in proper condition, suitable fire resistive dust barriers around areas where interior demolition and removal work is in progress. Dust barriers shall prevent the dust migration to adjacent areas. Remove dust barriers upon completion of major demolition and removal in the particular work area.

3.6 DISCOVERY OF HAZARDOUS MATERIALS

A. If hazardous materials, such as chemicals, asbestos-containing materials, or other hazardous materials are discovered during the course of the work, cease work in affected area only and immediately notify the Architect and the Owner of such discovery. Do not proceed with work in such areas until instructions are issued by the Architect. Continue work in other areas.

B. If unmarked containers are discovered during the course of the work, cease work in the affected area only and immediately notify the Architect and the Owner of such discovery. Do not proceed with work in such areas until instructions are issued by the Architect. Take immediate precautions to prohibit endangering the containers integrity. Continue work in other areas.

3.7 CUTTING

A. Perform all cutting of existing surfaces in a manner which will ensure a minimal difference between the cut area and new materials when patched. Use extreme care when cutting existing surfaces containing concealed utility lines which are indicated to remain and bear full responsibility for repairing or replacement of all such utilities that are accidentally damaged.

B. Provide a flush saw cut edge where pavement, curb and concrete removals abut new construction work or existing surfaces to remain undisturbed.

3.8 DISPOSAL OF DEMOLISHED MATERIALS

A. General: Comply with requirements of Section 01 74 19 - CONSTRUCTION WASTE MANAGEMENT and the following.
   1. Do not allow demolished materials to accumulate on-site.
   2. Remove and transport debris in a manner that will prevent spillage on adjacent surfaces and areas.
   3. Remove debris from elevated portions of building by chute, hoist, or other device that will convey debris to grade level in a controlled descent.

B. Burning: Do not burn demolished materials.

3.9 CLEANING

A. Clean adjacent structures and improvements of dust, dirt, and debris caused by selective demolition operations. Premises shall be left in a clean condition and ready to accept alteration work and new construction.

END OF SECTION

SECTION 03 30 00 - CAST-IN-PLACE CONCRETE

PART 1 - GENERAL

1.1 RELATED DOCUMENTS

A. Drawings and general provisions of the Contract, including General and Supplementary Conditions and Division 1 Specification Sections, apply to this Section.

1.2 SUMMARY

A. This Section specifies cast-in place concrete, including formwork, reinforcement, concrete materials, mix design, placement procedures, and finishes.

1.3 DEFINITIONS

A. Cementitious Materials: Portland cement alone or in combination with one or more of blended hydraulic cement, fly ash and other pozzolans, ground granulated blast-furnace slag, and silica fume.

1.4 REFERENCES

A. American Concrete Institute (ACI):

1. 117 - Specifications for Tolerances for Concrete Construction and Materials
2. 301 - Specifications for Structural Concrete for Buildings
3. 305R - Hot Weather Concreting
4. 306R - Cold Weather Concreting
5. 309R - Guide for Consolidation of Concrete
6. 315 - Manual of Standard Practice for Detailing Reinforced Concrete
7. 347 - Recommended Practice for Concrete Formwork
8. 318 - Building Code Requirements for Reinforced Concrete
9. 544.1R - State-of-the-Art Report of Fiber Reinforced Concrete
10. 554.2R - Measurement of Properties of Fiber Reinforced Concrete

B. American Society for Testing and Materials (ASTM):

1. A 615 - Deformed and Plain Billet-Steel Bars for Concrete Reinforcement
2. C 33 - Concrete Aggregate
3. C 39 - Compressive Strength of Cylindrical Concrete Specimens
4. C 94 - Ready-Mixed Cement
5. C 150 - Portland Cement
6. C 260 - Air-Entraining Admixtures for Concrete
7. C 309 - Liquid Membrane-Forming Compounds for Curing Concrete
8. C 494 - Chemical Admixtures for Concrete

9. C 1018 - Standard Test Method for Flexural Toughness and First-Crack Strength of Fiber-Reinforced Concrete (Using Beam with Third-Point Loading)
10. C 1116 - Type III, Sections 4.1.3 and 4.2, and Performance Level I, Toughness Index I5 outlined in Section 21, Note 17, Standard Specification for Fiber-Reinforced Concrete and Shotcrete

C. Federal Specifications (FS):

1. TT-C-800 - Curing Compound, Concrete, for New and Existing Surfaces

D. Concrete Reinforcing Steel Institute (CRSI):

1. CRSI - Manual of Standard Practice and Recommended Practice for Placing Reinforcing Bars (MSP-latest edition)

E. American Welding Society (AWS)

F. Scaffolding and Shoring Institute (SSI):

1. Scaffolding and Shoring Safety Rules

1.5 SUBMITTALS

A. Product Data: For each type of manufactured material and product indicated.

B. Design Mixes: For each concrete mix. Include alternate mix designs when characteristics of materials, project conditions, weather, test results, or other circumstances warrant adjustments.

1. Provide cement manufacturer's letter of certification and chemical content test results stating that the Portland cement is in compliance with ASTM designation C 150.
2. Indicate amounts of mix water to be withheld for later addition at Project site.

C. Steel Reinforcement Shop Drawings: Details of fabrication, bending, and placement, prepared according to ACI 315, "Details and Detailing of Concrete Reinforcement." Include material, grade, bar schedules, stirrup spacing, bent bar diagrams, arrangement, and supports of concrete reinforcement. Include special reinforcement required for openings through concrete structures.

D. Welding Certificates: Copies of certificates for welding procedures and personnel.

E. Flatwork Certificates: Copies of supervisors “ACI Concrete Flatwork Technician” certificate.

F. Material Certificates: Signed by manufacturers certifying that each of the following items complies with requirements:

1. Cementitious materials and aggregates.
2. Form materials and form-release agents.
3. Steel reinforcement and reinforcement accessories.
4. Admixtures.
5. Curing materials.
6. Bonding agents.

7. Adhesives.
8. Waterstops.
9. Epoxy joint filler.
10. Joint-filler strips.
11. Repair materials.

1.6 QUALITY ASSURANCE

A. Installer Qualifications: An experienced installer who has completed concrete Work similar in material, design, and extent to that indicated for this Project and whose work has resulted in construction with a record of successful in-service performance.

B. Manufacturer Qualifications: A firm experienced in manufacturing ready-mixed concrete products complying with ASTM C 94 requirements for production facilities and equipment.

1. Manufacturer must be certified according to the National Ready Mixed Concrete Association's Certification of Ready Mixed Concrete Production Facilities.

C. Testing Agency Qualifications: An independent testing agency, approved by the Engineer and acceptable to authorities having jurisdiction, qualified according to ASTM C 1077 and ASTM E 329 to conduct the testing indicated, as documented according to ASTM E 548.

1. Personnel conducting field tests shall be qualified as ACI Concrete Field-Testing Technician, Grade 1, according to ACI CP-1 or an equivalent certification program.

D. Source Limitations: Obtain each type or class of cementitious material of the same brand from the same manufacturer's plant, each aggregate from one source, and each admixture from the same manufacturer.

E. Welding: Qualify procedures and personnel according to AWS D1.4, "Structural Welding Code--Reinforcing Steel."

F. ACI Publications: Comply with the following, unless more stringent provisions are indicated:

1. ACI 301, "Specification for Structural Concrete."
2. ACI 117, "Specifications for Tolerances for Concrete Construction and Materials."

1.7 DELIVERY, STORAGE, AND HANDLING

A. Deliver, store, and handle steel reinforcement to prevent bending and damage.

PART 2 - PRODUCTS

2.1 FORM-FACING MATERIALS

A. Rough-Formed Finished Concrete: Plywood, lumber, metal, or another approved material. Provide lumber dressed on at least two edges and one side for tight fit.

B. Form-Release Agent: Commercially formulated form-release agent with a maximum of 350 g/L volatile organic compounds (VOCs) that will not bond with, stain, or adversely affect concrete surfaces and will not impair subsequent treatments of concrete surfaces.

1. Formulate form-release agent with rust inhibitor for steel form-facing materials.

C. Form Ties: Factory-fabricated, removable or snap-off metal or glass-fiber-reinforced plastic form ties designed to resist lateral pressure of fresh concrete on forms and to prevent spalling of concrete on removal.

1. Furnish units that will leave no corrodible metal closer than 1 inch to the plane of the exposed concrete surface.
2. Furnish ties that, when removed, will leave holes not larger than 1 inch in diameter in concrete surface.

2.2 STEEL REINFORCEMENT

A. Reinforcing Bars: ASTM A 615/A 615M, Grade 60, deformed.

1. Bars shall be clean and free from rust, scale or coatings that will reduce bond. Reinforcing steel shall be capable of bending 180 degrees and rebending to original shape without fracture.

B. Plain-Steel Wire: ASTM A 82, galvanized.

2.3 REINFORCEMENT ACCESSORIES

A. Bar Supports: Bolsters, chairs, spacers, and other devices for spacing, supporting, and fastening reinforcing bars and welded wire fabric in place. Manufacture bar supports according to CRSI's "Manual of Standard Practice" from steel wire, plastic, or precast concrete or fiber-reinforced concrete of greater compressive strength than concrete, and as follows:

1. For concrete surfaces exposed to view where legs of wire bar supports contact forms, use CRSI Class 1 plastic-protected or CRSI Class 2 stainless-steel bar supports.

B. Joint Dowel Bars: Plain-steel bars, ASTM A 615/A 615M, Grade 60. Cut bars true to length with ends square and free of burrs.

2.4 CONCRETE MATERIALS

A. Portland Cement: ASTM C 150, Type II.

1. Ground Granulated Blast-Furnace Slag: ASTM C 989, Grade 120.

a. At the contractor's option, slag cement may be blended with type II cement to modify specific properties of the concrete. The percentage of slag cement recommended by the supplier shall be approved by the Engineer.
b. At the supplier's option, slag cement may be blended with type II cement to achieve the performance of 0.60% alkali. The cement supplier shall provide a letter certifying the percentage of slag cement required to achieve the performance of low alkali cement specified.
c. May be used in foundation walls and footings. Not allowed for use in interior slabs-on-grade mixes.

B. Normal-Weight Aggregate: ASTM C 33, uniformly graded, and as follows:

1. Class: Severe weathering region, but not less than 3S.
2. Nominal Maximum Aggregate Size: 3/4 inch.

C. Water: Potable and complying with ASTM C 94.

2.5 ADMIXTURES

A. General: Admixtures certified by manufacturer to contain not more than 0.1 percent water-soluble chloride ions by mass of cementitious material and to be compatible with other admixtures and cementitious materials. Do not use admixtures containing calcium chloride.

B. Air-Entraining Admixture: ASTM C 260.

C. Water-Reducing Admixture: ASTM C 494, Type A.

D. High-Range, Water-Reducing Admixture: ASTM C 494, Type F.

E. Water-Reducing and Accelerating Admixture: ASTM C 494, Type E.

F. Water-Reducing and Retarding Admixture: ASTM C 494, Type D.

G. Non-Corrosive Accelerator: ASTM C 494, Type C or E.

1. Non –corrosive accelerator shall have long-term test data proving its non-corrosive effect on reinforcing steel.

H. Corrosion-Inhibiting Admixture: Commercially formulated, anodic inhibitor or mixed cathodic and anodic inhibitor; capable of forming a protective barrier and minimizing chloride reactions with steel reinforcement in concrete.

1. Available Products: Subject to compliance with requirements, products that may be incorporated into the Work include, but are not limited to, the following:

a. Catexol 1000CL; Axim Concrete Technologies.
b. MCI 2000 or MCI 2005; Cortec Corporation.
c. DCI or DCI-S; W. R. Grace & Co., Construction Products Div.
d. Rheocrete 222+; Master Builders, Inc.
e. FerroGard-901; Sika Corporation.

2.6 CURING MATERIALS

A. Evaporation Retarder: Waterborne, monomolecular film forming, manufactured for application to fresh concrete.

B. Absorptive Cover: AASHTO M 182, Class 2, burlap cloth made from jute or kenaf, weighing approximately 9 oz./sq. yd. dry.

C. Moisture-Retaining Cover: ASTM C 171, polyethylene film or white burlap-polyethylene sheet.

D. Water: Clean and Potable.

E. Clear, Waterborne, Membrane-Forming Curing Compound: ASTM C 309, Type 1, Class B.

F. Available Products: Subject to compliance with requirements, products that may be incorporated into the Work include, but are not limited to, the following:

1. Evaporation Retarder:

a. Sure Film; Dayton Superior Corporation.
b. Eucobar; Euclid Chemical Co.
c. Confilm; Master Builders, Inc.
d. SikaFilm; Sika Corporation.

2. Clear, Waterborne, Membrane-Forming Curing Compound:

a. AH Clear Cure WB; Anti-Hydro International, Inc.
b. Safe Cure and Seal; Dayton Superior Corporation.
c. Aqua Cure VOX; Euclid Chemical Co.
d. Vocomp-20; W. R. Meadows, Inc.
e. Kure-N-Seal WB; Sonneborn, Div. of ChemRex, Inc.

2.7 RELATED MATERIALS

A. Isolation Joint Former (Columns): 4" x 24" diameter as manufactured by Greenstreak, P.O. Box 7139, St. Louis, MO 63177, or approved equal.

B. Perimeter Isolation Joint: 2 lb. density, cross linked polyethylene with removable strip-off equal to ISO-STRIP as manufactured for Century Floors, Topsham, Maine.

1. Edge Tape: Vaporlock edge tape, pre-formed 3 inch wide two-sided adhesive.

C. Joint-Filler Strips: ASTM D 1751, asphalt-saturated cellulosic fiber, or ASTM D 1752, cork or self-expanding cork.

D. Epoxy Joint Filler: Two-component, semirigid, 100 percent solids, epoxy resin with a Shore A hardness of 80 per ASTM D 2240.

E. Bonding Agent: ASTM C 1059, Type II, non-redispersible, acrylic emulsion or styrene butadiene.

F. Epoxy-Bonding Adhesive: ASTM C 881, two-component epoxy resin, capable of humid curing and bonding to damp surfaces, of class and grade to suit requirements.

G. Doweling Adhesive: A two-component, vinylester blend resin equal to HI HY150 adhesive as manufactured by Hilti Fastening Systems, Tulsa, Oklahoma or approved equal

H. Key Joint (Construction Joint only): 24 gauge galvanized steel with 1-1/8" dowel knockouts 6" on center. Keyway shall be equal to "Key-Lock Joint" with removable plastic cap strip by Form-A-Key Products Div., Louisville, KY 40214, or approved equal.

I. Dowels: 24 (608 mm) inch long square dowels with sawn ends (sheared bars not acceptable).

1. Dowel Sleeve: 3/4 inch (19 mm) by 12 (304 mm) inch long, plastic sleeve with 3/16 inch (4 mm) thick polyethylene foam on vertical legs equal to Expando-Lok by Jay Kay Sales.
2. Dowel Aligner: Cast plastic dowel aligner with nailing flange.

J. Non-Shrink Grout: Premixed compound with non-metallic aggregate, cement, water-reducing and plasticizing agents capable of minimum compression strength of 2,400 lbs. Non-shrink grout shall be equal to "Eucon N-S" (non-metallic) by the Euclid Chemical Co., "Masterflow 713" (non-metallic) by Master Builders, or Five Star Grout by U.S. Grout Corp.

2.8 REPAIR MATERIALS

A. Repair Underlayment: Cement-based, polymer-modified, self-leveling product that can be applied in thicknesses from 1/8 inchand that can be feathered at edges to match adjacent floor elevations.

1. Cement Binder: ASTM C 150, portland cement or hydraulic or blended hydraulic cement as defined in ASTM C 219.
2. Primer: Product of underlayment manufacturer recommended for substrate, conditions, and application.
3. Aggregate: Well-graded, washed gravel, 1/8 to 1/4 inch or coarse sand as recommended by underlayment manufacturer.
4. Compressive Strength: Not less than 4100 psiat 28 days when tested according to ASTM C 109/C 109M.

2.9 CONCRETE MIXES

A. Prepare design mixes for each type and strength of concrete determined by either laboratory trial mix or field test data bases, as follows:

1. Proportion normal-weight concrete according to ACI 211.1 and ACI 301.

B. Use a qualified independent testing agency for preparing and reporting proposed mix designs for the laboratory trial mix basis.

C. Footings: Proportion normal-weight concrete mixture as follows:

1. Minimum Compressive Strength: 3500 psi at 28 days.
2. Maximum Water-Cementitious Materials Ratio: 0.52.
3. Slump Limit: 4 inches, plus or minus 1 inch.
4. Air Content: 6 percent, plus or minus 1.5 percent at point of delivery for 3/4-inchnominal maximum aggregate size.

D. Interior Slabs-on-Grade: Proportion normal-weight concrete mixture as follows:

1. Minimum Compressive Strength: 4000 psi at 28 days.
2. Maximum Water-Cementitious Materials Ratio: 0.50.
3. Slump Limit: 5 inches.
4. Do not add Slag, Fly Ash or Natural Pozzolans.
5. Air content below is maximum recommended by ACI 302.1R for trowel-finished floors.
6. Air Content: Do not allow air content of troweled finished floors to exceed 3 percent.
7. Fiber Reinforcing: Uniformly disperse in concrete mixture at manufacturer's recommended rate, but not less than 3.0 lb/cu. yd. Macro-fibers to be 1-1/2” to 2-1/4” long.
8. Reinforcement: See sheet S-000, Structural Concrete Note 9 for associated with slab-on-grade thickness.

E. Elevated Slabs on Metal Decking: Proportion normal-weight concrete mixture as follows:

1. Minimum Compressive Strength: 3500 psi at 28 days.
2. Maximum Water-Cementitious Materials Ratio: 0.49.
3. Slump Limit: 4 inches, plus or minus 2 inch.
4. Air Content: Do not allow air content of troweled finished floors to exceed 3 percent.
5. Reinforcement: Provide 6 x 6 x W2.1 x W2.1 WWM on bolsters at 1” clear below top of slab surface over entire slab area.

F. Miscellaneous Site Concrete not specified in other sections: Unless otherwise indicated, proportion normal-weight concrete mix as follows:

1. Minimum Compressive Strength: 4000 psi at 28 days.
2. Maximum Water-Cementitious Materials Ratio: 0.45.
3. Slump Limit: 5 inches.
4. Air Content: 6 percent, plus or minus 1.5 percent at point of delivery for 3/4-inchnominal maximum aggregate size.

G. Cementitious Materials: For concrete exposed to deicers, limit percentage, by weight, of cementitious materials other than Portland cement according to ACI 301 requirements.

H. Maximum Water-Cementitious Materials Ratio: 0.50 for concrete required to have low water permeability.

I. Maximum Water-Cementitious Materials Ratio: 0.45 for concrete exposed to deicers or subject to freezing and thawing while moist.

J. Air Content: Add air-entraining admixture at manufacturer's prescribed rate to result in concrete at point of placement having an air content as follows within a tolerance of plus 1 or minus 1.5 percent, unless otherwise indicated:

1. Air Content: 6 percent for 3/4-inch-nominal maximum aggregate size.

K. Do not air entrain concrete to trowel-finished interior floors. Do not allow entrapped air content to exceed 3 percent.

L. Limit water-soluble, chloride-ion content in hardened concrete to 0.15 percent by weight of cement.

M. Admixtures: Use admixtures according to manufacturer's written instructions.

1. Use water-reducing admixture in concrete, as required, for placement and workability.
2. Use water-reducing and retarding admixture when required by high temperatures, low humidity, or other adverse placement conditions.
3. Use corrosion-inhibiting admixture in concrete mixes where indicated.

2.10 FABRICATING REINFORCEMENT

A. Fabricate steel reinforcement according to CRSI's "Manual of Standard Practice."

2.11 CONCRETE MIXING

A. Ready-Mixed Concrete: Measure, batch, mix, and deliver concrete according to ASTM C 94 and ASTM C 1116 and furnish batch ticket information.

1. When air temperature is between 85 and 90°F (30 and 32°C), reduce mixing and delivery time from one and one-half (1-1/2) hours to seventy-five (75) minutes: when air temperature is above 90°F (32°C), reduce mixing and delivery time to sixty (60) minutes.

PART 3 - EXECUTION

3.1 FORMWORK

A. Design, erect, shore, brace, and maintain formwork, according to ACI 301, to support vertical, lateral, static, and dynamic loads, and construction loads that might be applied, until concrete structure can support such loads.

1. Construct formwork so concrete members and structures are of size, shape, alignment, elevation, and position indicated, within tolerance limits of ACI 117. Excessive deflection of forms after concrete is poured shall be sufficient cause for rejection of that

portion of concrete and formwork. Excessive deflection will be considered to be that which will produce visible and noticeable waves in the finished concrete.

B. Limit concrete surface irregularities, designated by ACI 347R as abrupt or gradual, as follows:

1. Surfaces exposed to view: Class A, 1/8 inch
2. Surfaces not exposed Class C, 1/2 inch

C. Construct forms tight enough to prevent loss of concrete mortar.

D. All possible care shall be taken in the formwork to produce surfaces free from honeycomb or other defects.

E. Fabricate forms for easy removal without hammering or prying against concrete surfaces. Provide crush or wrecking plates where stripping may damage cast concrete surfaces. Provide top forms for inclined surfaces steeper than 1.5 horizontal to 1 vertical. Kerf wood inserts for forming keyways, reglets, recesses, and the like, for easy removal.

1. Do not use rust-stained steel form-facing material.

F. Set edge forms, bulkheads, and intermediate screed strips for slabs to achieve required elevations and slopes in finished concrete surfaces. Provide and secure units to support screed strips; use strike-off templates or compacting-type screeds.

G. Schedule the work and notify other trades in time so that provisions for their work in the formwork can be made without delaying progress of the project. Verify that all sleeves, pipes, etc., for electrical, plumbing, heating and ventilation, or other work are installed.

H. Clean forms and adjacent surfaces to receive concrete. Remove chips, wood, sawdust, dirt, and other debris just before placing concrete.

I. Bolts, rods or other approved devices shall be used for internal ties. They shall be so arranged that when the forms are removed, no metal shall be within 1" of any surface.

J. Retighten forms and bracing before placing concrete, as required, to prevent mortar leaks and maintain proper alignment.

K. Coat contact surfaces of forms with form-release agent, according to manufacturer's written instructions, before placing reinforcement.

L. Place and secure anchorage devices and other embedded items required for adjoining work that is attached to or supported by cast-in-place concrete. Use Setting Drawings, templates, diagrams, instructions, and directions furnished with items to be embedded.

1. Secure information about and provide for all openings, offsets, recessed nailing blocks, channel chases, anchors, ties, inserts, etc., in the formwork before concrete is poured.
2. Install anchor bolts, accurately located, to elevations required.

a. The setting of all anchor bolts and the grouting for all structural steel base plates shall be included as part of this contract

b. All column base plates, equipment bases, and other locations noted in the structural drawings shall be grouted with the specified non-shrink grout. All exposed grout shall be the specified non-metallic type.

3.2 REMOVING AND REUSING FORMS

A. General: Formwork, for sides of beams, walls, columns, and similar parts of the Work, that does not support weight of concrete may be removed after cumulatively curing at not less than 50 deg F for 24 hours after placing concrete provided concrete is hard enough to not be damaged by form-removal operations and provided curing and protection operations are maintained.

B. Clean and repair surfaces of forms to be reused in the Work. Split, frayed, delaminated, or otherwise damaged form-facing material will not be acceptable for exposed surfaces. Apply new form-release agent.

C. When forms are reused, clean surfaces, remove fins and laitance, and tighten to close joints. Align and secure joints to avoid offsets. Do not use patched forms for exposed concrete surfaces unless approved by Engineer.

3.3 STEEL REINFORCEMENT

A. General: Comply with CRSI's "Manual of Standard Practice" for placing reinforcement.

1. Steel reinforcing shall not be bent in a manner that will injure the material or the embedding concrete. Bars with kinks or bends not shown on the plans shall not be used. Heating of reinforcement for bending will not be permitted. Bars shall be bent once only (no rebending or straightening allowed) unless shown as such on the drawings.
2. All details of reinforcement not shown or indicated on the drawings or specifically called for in the specifications shall conform to ACI 315.
3. Lap all bars at splices, corners and intersections a minimum of 36 bar diameters unless otherwise indicated. Laps of welded-wire fabric shall be at least two times the spacing of the members in the direction lapped but not less than twelve inches.
4. All intersecting concrete walls shall be tied with #4L bars 3'-0" long, bent 18" x 18" spaced 12" on center, outside face only unless otherwise indicated.
5. Splices of reinforcement shall not be made at points of maximum stress. Splice lengths shall be a minimum of 36 bar diameters unless otherwise indicated and shall provide sufficient lap to transfer the stress between bars by bond and shear. Stagger splices of adjacent bars where possible. All splices and laps at corners and intersections shall be tied with wire at each end.
6. Where obstructions (pipes, conduit, ducts, etc.) prevent the intended placement of reinforcing, provide additional reinforcing as directed by the Engineer or his Representative around the obstruction to match that reinforcing interrupted.
7. Provide additional stirrups, ties, trim bars, etc., as directed around all openings, sleeves, pipes, and conduits, which pass through structural elements.
8. Do not cut or puncture vapor retarder. Repair damage and reseal vapor retarder before placing concrete.

B. Clean reinforcement of loose rust and mill scale, earth, ice, and other foreign materials. Accurately position, support, and secure reinforcement against displacement. Locate and support reinforcement with bar supports to maintain minimum concrete cover. Do not tack weld crossing reinforcing bars.

1. Coverage of bars (including stirrups and column ties) shall, unless otherwise shown, be as follows:

Footings:	3" soil face, 2" top
Slabs (on grade):	2" soil face, 1-1/2" top face
Walls:	2" clear to form at exterior

2. Misplaced Reinforcing: If any reinforcing bars are found to be misplaced after concrete has been placed, the Engineer shall be notified immediately and no correction or cutting shall be made without his direction. Misplaced bars shall not be bent or kinked. Any redesign and/or reinforcing required because of misplaced bars shall be at the Contractor's expense.
3. All reinforcing shall be kept separate from soil, pipe, conduit ducts, etc., by approved non-metallic separators.
4. Shop- or field-weld reinforcement according to AWS D1.4, where indicated.

C. Set wire ties with ends directed into concrete, not toward exposed concrete surfaces.

3.4 JOINTS

A. General: Construct joints true to line with faces perpendicular to surface plane of concrete.

B. Construction Joints: Install so strength and appearance of concrete are not impaired, at locations indicated or as approved by Engineer.

1. Place joints perpendicular to main reinforcement. Continue reinforcement across construction joints, unless otherwise indicated. Do not continue reinforcement through sides of strip placements of floors and slabs.
2. Form from preformed galvanized steel, plastic keyway-section forms, or bulkhead forms with keys, unless otherwise indicated. Embed keys at least 1-1/2 inches into concrete.
3. Space vertical joints in walls as indicated. Locate joints beside piers integral with walls, near corners, and in concealed locations where possible.

   a. Wall control "V" joints shall have a depth of 1/8 times the thickness of the wall and be 1/2" wide at surface. "V" joints shall be placed as shown or as directed by the Engineer.

4. Use a bonding agent at locations where fresh concrete is placed against hardened or partially hardened concrete surfaces.

C. Contraction Joints in Slabs-on-Grade: Form weakened-plane contraction joints, sectioning concrete into areas as indicated. Construct contraction joints for a depth equal to at least one-fourth of concrete thickness, or 3/4" minimum for soft-cut as follows:

1. Sawed Joints: Form contraction joints with power saws equipped with shatterproof abrasive or diamond-rimmed blades. Cut 1/4"maximum wide joints into concrete when

cutting action will not tear, abrade, or otherwise damage surface and before concrete develops random contraction cracks.

a. Floor slab control joints shall be placed as shown on the foundation plan. Unless otherwise noted, control joints shall be spaced at intervals not to exceed 12'-0" on center in both directions.

D. Isolation Joints in Slabs-on-Grade: After removing formwork, install joint-filler strips at slab junctions with vertical surfaces, such as column pedestals, foundation walls, grade beams, and other locations, as indicated.

1. Terminate full-width joint-filler strips not less than 1/2 inch or more than 1 inch below finished concrete surface where joint sealants, specified in Division 7 Section "Joint Sealants," are indicated.
2. Install joint-filler strips in lengths as long as practicable. Where more than one length is required, lace or clip sections together.

E. Dowel Joints: Install dowel sleeves and dowels or dowel bar and support assemblies at joints where indicated.

1. All intersecting slab construction joints acting as control joints shall be doweled according to the following schedule unless otherwise indicated. Dowels shall be smooth, steel grade 60 with saw cut ends. Grease, wrap or cap one end.

Dowel Schedule

	Dowel Dia.	Length	Spacing
4" Slab	1/2"	12"	12"
5" Slab	5/8"	14"	12"
6" Slab	3/4"	14"	12"
7" Slab	7/8"	14"	12"
8" Slab	1"	14"	12"

3.5 MIXING CONCRETE

A. General: The concrete shall be mixed in the quantities required for immediate use, and any which has developed initial set or exceed the time limit of ASTM C 94 shall not be used. No retempering of mortar or concrete shall be allowed under any circumstances. Concrete shall be proportioned, mixed and placed only in the presence of the Engineer or his Authorized Representative. The Contractor shall give ample notice to the Engineer before mixing is commenced. Aggregate size will be adjusted to suit conditions of work. Pumping of concrete shall be permitted only after approval by the Engineer of the Pumping Contractor and the pumping equipment and method to be employed. The Engineer shall be notified of dates when pumping of concrete shall be performed to permit his on-the-job inspection of the operations.

B. Final proportions shall be in accordance with approved mix designs. Adjustments to approved proportions, for whatever reason, shall be approved by the Engineer.

3.6 CONCRETE PLACEMENT

A. Before placing concrete, verify that installation of formwork, reinforcement, and embedded items is complete and that required inspections have been performed.

B. Remove loose dirt, mud, standing water, and foreign matter from excavations or from cavities.

C. Thoroughly clean reinforcement and other embedded items free from loose rust and other matter. Assure reinforcing is held securely in place.

D. Thoroughly wet wood forms (except coated plywood), bottom and sides of trenches, base underslab, and adjacent concrete or masonry at least one hour in advance of placing concrete; securely close cleanout and inspection ports; repeat wetting as necessary to keep forms damp.

E. Equipment shall be maintained clean and of sufficient quantity and capacity to efficiently execute the work required.

F. Before placing concrete, water may be added at Project site, subject to limitations of ACI 301.

G. Deposit concrete continuously or in layers of such thickness that no new concrete will be placed on concrete that has hardened enough to cause seams or planes of weakness. If a section cannot be placed continuously, provide construction joints as specified. Deposit concrete to avoid segregation.

H. Deposit concrete in forms in horizontal layers no deeper than 24 inches and in a manner to avoid inclined construction joints. Place each layer while preceding layer is still plastic, to avoid cold joints.

1. Consolidate placed concrete with mechanical vibrating equipment. Use equipment and procedures for consolidating concrete recommended by ACI 309R.

    a. concrete shall be vibrated into final position in forms with an internal type vibrating machine. The vibration shall have a frequency of not less than 8,000 vibrations per minute. The mechanical vibrating equipment shall be satisfactory to the Engineer.
    b. The vibration shall be of sufficient intensity and duration to cause flow or settlement of the concrete and complete consolidation. Over vibration, especially of mixtures that are too wet, may cause segregation and will be avoided. A sufficient number of vibrators shall be provided to permit consolidation of each batch before the next batch is delivered and without delaying the delivery.
    c. The vibrations shall be applied directly to the concrete, and vibration through the forms shall not be permitted. Vibration shall be applied at the point of deposit and in the area of freshly deposited concrete. The concrete shall be placed in layers of uniform thickness

2. Do not use vibrators to transport concrete inside forms. Insert and withdraw vibrators vertically at uniformly spaced locations no farther than the visible effectiveness of the vibrator. Place vibrators to rapidly penetrate placed layer and at least 6 inches into preceding layer. Do not insert vibrators into lower layers of concrete that have begun to lose plasticity. At each insertion, limit duration of vibration to time necessary to

consolidate concrete and complete embedment of reinforcement and other embedded items without causing mix constituents to segregate.

3. When conditions make puddling difficult, or where the reinforcement is congested, batches of mortar containing the same proportions of cement to sand used in the concrete shall be deposited in the forms. The operation of filling with the regularly specified mix shall be carried on at such a rate that the mix is at all times plastic and flows readily into the spaces between the bars.
4. In thin walls or inaccessible portions of the forms where rodding is impractical, the concrete shall be worked into place by tapping or hammering forms adjacent to the freshly deposited concrete.
5. The Contractor's attention is called to the importance of making the concrete dense, and he shall provide sufficient labor to the entire satisfaction of the Engineer to thoroughly consolidate the concrete, avoid air pockets and voids in exposed sections, and leave smooth, uniform surfaces after forms are removed.
6. Should any honeycombed concrete be disclosed upon removal of forms, the Contractor shall immediately cut out the said honeycombed portions back to solid concrete and shall fill the opening thus formed with a concrete of the same proportions as that specified for the section of work in which the fault occurs.
7. When placing fresh concrete upon hardened concrete, the latter shall be thoroughly roughened and cleaned of all loose material, scum or latency. The bonding compound shall be applied and the new concrete placed while the bonding compound is still tacky.
8. Joints in the concrete work shall be made only in places and the manner specified by the Engineer.
9. The Contractor's attention is called to the importance of properly and carefully placing concrete around reinforcement, as the reinforcing metal must not be exposed; and in cases where reinforcing metal becomes exposed on the surface, that portion of work must be removed and re-laid as the covering of same by plastering with cement mortar will not be allowed. All reinforcing rods or other reinforcing material shall be lightly tapped so that they will retain their original position.
10. No concrete shall be retempered except as allowed in ASTM C 94 nor shall set concrete be used as aggregate.

I. Deposit and consolidate concrete for floors and slabs in a continuous operation, within limits of construction joints, until placement of a panel or section is complete.

1. Consolidate concrete during placement operations so concrete is thoroughly worked around reinforcement and other embedded items and into corners.
2. Maintain reinforcement in position on chairs during concrete placement.

    a. Reinforcement, unless otherwise indicated, shall be placed one-half the thickness of the slab.

3. Screed slab surfaces with a straightedge and strike off to correct elevations.
4. Slope surfaces uniformly to drains where required.
5. Begin initial floating using bull floats or darbies to form a uniform and open-textured surface plane, free of humps or hollows, before excess moisture or bleedwater appears on the surface. Do not further disturb slab surfaces before starting finishing operations.
6. Slabs shall be monolithically placed with control joints. Sawed control joints will be located as indicated on the drawings and/or as directed by the Engineer. Floors shall be cleaned of objects before saw cutting begins. A true, continuous saw cut is what is expected as a finish result.

J. Cold-Weather Placement: Comply with ACI 306.1 and as follows. Protect concrete work from physical damage or reduced strength that could be caused by frost, freezing actions, or low temperatures.

1. When air temperature has fallen to or is expected to fall below 40 deg F uniformly heat water and aggregates before mixing to obtain a concrete mixture temperature of not less than 50 deg F and not more than 80 deg Fat point of placement.
2. Do not use frozen materials or materials containing ice or snow. Do not place concrete on frozen subgrade or on subgrade containing frozen materials.
3. Do not use calcium chloride, salt, or other materials containing antifreeze agents or chemical accelerators, unless otherwise specified and approved in mix designs.
4. Contractor shall have on the job, ready to install, adequate equipment for heating the materials and the freshly placed concrete and for enclosing the work in accordance with the requirements specified herein.

K. Hot-Weather Placement: Place concrete according to recommendations in ACI 305R and as follows, when hot-weather conditions exist:

1. Cool ingredients before mixing to maintain concrete temperature below 90 deg Fat time of placement. Chilled mixing water or chopped ice may be used to control temperature, provided water equivalent of ice is calculated to total amount of mixing water. Using liquid nitrogen to cool concrete is Contractor's option.
2. Cover steel reinforcement with water-soaked burlap so steel temperature will not exceed ambient air temperature immediately before embedding in concrete.
3. Fog-spray forms, steel reinforcement, and subgrade just before placing concrete. Keep subgrade moisture uniform without standing water, soft spots, or dry areas.

L. Protection:

1. Concrete just placed shall be protected from rain in an approved manner until the concrete has set, or if a slab, the curing compound has dried.
2. Concrete, when placed in the forms, shall have a temperature of not less than 50 degrees F or more than 90 degrees F. Freshly placed concrete and the surrounding air shall be maintained at a temperature of 50 degrees F or greater for a period of seven days after placing. If high early strength concrete is used, the aforementioned time period may be reduced to three days. The methods of protection and curing shall be such as to prevent evaporation of moisture from the concrete and injury to the surface.
3. Should it later develop that any concrete work has become injured in any way by freezing or otherwise, the defective concrete shall be repaired or replaced as directed by the Engineer at no added expense to the Owner. Repair materials shall include all reinforcement grouts, dry pack, admixtures, epoxy and aggregates as may be necessary

3.7 PROTECTIVE COATING FOR STRUCTURAL STEEL

A. All structural steel and columns and their bases which extend into or through concrete floors or walls shall be thoroughly brush painted with two coats of foundation coating as specified in Section 07150 - Dampproofing, and applied in accordance with the manufacturer's directions, neatly cut off one inch below finish floor.

3.8 FINISHING FORMED SURFACES

A. Rough-Formed Finish: As-cast concrete texture imparted by form-facing material with tie holes and defective areas repaired and patched. Remove fins and other projections exceeding ACI 347R limits for class of surface specified.

B. Smooth-Formed Finish: As-cast concrete texture imparted by form-facing material, arranged in an orderly and symmetrical manner with a minimum of seams. Repair and patch tie holes and defective areas. Remove fins and other projections exceeding 1/8 inch in height.

1. Apply to concrete surfaces exposed to public view or to be covered with a coating or covering material applied directly to concrete, such as waterproofing, dampproofing, veneer plaster, or painting.
2. Do not apply rubbed finish to smooth-formed finish.

C. Related Unformed Surfaces: At tops of walls, horizontal offsets, and similar unformed surfaces adjacent to formed surfaces, strike off smooth and finish with a texture matching adjacent formed surfaces. Continue final surface treatment of formed surfaces uniformly across adjacent unformed surfaces, unless otherwise indicated.

3.9 FINISHING FLOORS AND SLABS

A. General: Comply with recommendations in ACI 302.1R for screeding, re-straightening, and finishing operations for concrete surfaces. Do not wet concrete surfaces.

1. All interior concrete floor slabs shall be finished true and smooth by steel troweling or finishing machine. All exterior slabs, pads, ramps, stairs, and sidewalks shall be broom finished.
2. When a section of the concrete floor is completed, it shall be left entirely undisturbed until the concrete is thoroughly hardened.
3. Adequate provisions will be made to eliminate the possibility of accidental encroachment upon the newly concreted area.

B. Float Finish: Consolidate surface with power-driven floats or by hand floating if area is small or inaccessible to power driven floats. Restraighten, cut down high spots, and fill low spots. Repeat float passes and restraightening until surface is left with a uniform, smooth, granular texture.

1. Apply float finish to surfaces indicated, to surfaces to receive trowel finish.

C. Trowel Finish: After applying float finish, apply first trowel finish and consolidate concrete by hand or power-driven trowel. Continue troweling passes and restraighten until surface is free of trowel marks and uniform in texture and appearance. Grind smooth any surface defects that would telegraph through applied coatings or floor coverings.

1. Apply a trowel finish to surfaces indicated and to floor and slab surfaces exposed to view or to be covered with resilient flooring, carpet, ceramic or quarry tile set over a cleavage membrane, paint, or another thin film-finish coating system
2. Finish surfaces to the following tolerances, measured within 24 hours according to ASTM E 1155/E 1155M for a randomly trafficked floor surface:

a. Tolerances will be in accordance with ACI Publication #117 - Class AX. Depression in floor between high spots shall not be greater than 3/16" in 10'-0" ± 1/16", and the measurement will be taken by the straight edge method no later than the day after the concrete floor has been poured.

D. Trowel and Fine-Broom Finish: Apply a partial trowel finish, stopping after second troweling, to surfaces indicated and to surfaces where ceramic or quarry tile is to be installed by either thickset or thin-set method. Immediately after second troweling, and when concrete is still plastic, slightly scarify surface with a fine broom.

E. Broom Finish: Apply a broom finish to exterior concrete platforms, steps, and ramps, and elsewhere as indicated.

1. Immediately after float finishing, slightly roughen trafficked surface by brooming with fiber-bristle broom perpendicular to main traffic route. Coordinate required final finish with Engineer before application.

3.10 MISCELLANEOUS CONCRETE ITEMS

A. Filling In: Fill in holes and openings left in concrete structures, unless otherwise indicated, after work of other trades is in place. Mix, place, and cure concrete, as specified, to blend with in-place construction. Provide other miscellaneous concrete filling indicated or required to complete Work.

B. Curbs: Provide monolithic finish to interior curbs by stripping forms while concrete is still green and by steel-troweling surfaces to a hard, dense finish with corners, intersections, and terminations slightly rounded.

C. Equipment Bases and Foundations: Provide machine and equipment bases and foundations as shown on Drawings. Set anchor bolts for machines and equipment at correct elevations, complying with diagrams or templates of manufacturer furnishing machines and equipment.

D. Mechanical Equipment Pads: Provide 4" concrete pads reinforced with 6x6 - W1.4xW1.4 welded-wire fabric under all mechanical equipment supported on concrete floor slab unless otherwise indicated.

E. Steel Pan Stairs: Provide concrete fill for steel pan stair treads, landings, and associated items. Cast-in inserts and accessories as shown on Drawings. Screed, tamp, and trowel-finish concrete surfaces.

F. Foundation Insulation: Install foundation insulation using a dab of emulsified asphalt mastic in each corner and the center to adhere the insulation to the concrete wall. Insulation will be installed on the inside face of all perimeter foundation walls extending from the underside of floor slab to top of footing. Insulation furnished under Section 07200 - Insulation.

3.11 CONCRETE PROTECTION AND CURING

A. General: Protect freshly placed concrete from premature drying and excessive cold or hot temperatures. Comply with ACI 306.1 for cold-weather protection and with recommendations in ACI 305R for hot-weather protection during curing.

B. Evaporation Retarder: Apply evaporation retarder to unformed concrete surfaces if hot, dry, or windy conditions cause moisture loss approaching 0.2 lb/sq. ft. x h before and during finishing operations. Apply according to manufacturer's written instructions after placing, screeding, and bull floating or darbying concrete, but before float finishing.

C. Unformed Surfaces: Begin curing immediately after finishing concrete. Cure unformed surfaces, including floors and slabs, and other surfaces as indicated below.

1. Moisture Curing: Keep surfaces continuously moist for not less than seven days with the following materials:

   a. Water.
   b. Continuous water-fog spray.
   c. Absorptive cover, water saturated, and kept continuously wet. Cover concrete surfaces and edges with 12-inch lap over adjacent absorptive covers.

2. Moisture-Retaining-Cover Curing: Cover concrete surfaces with moisture-retaining cover for curing concrete, placed in widest practicable width, with sides and ends lapped at least 12 inches and sealed by waterproof tape or adhesive. Cure for not less than seven days. Immediately repair any holes or tears during curing period using cover material and waterproof tape.

   a. Moisture cure or use moisture-retaining covers to cure concrete surfaces to receive floor coverings.
   b. Cure concrete surfaces to receive floor coverings with either a moisture-retaining cover or a curing compound that the manufacturer recommends for use with floor coverings.

3. Curing Compound: Apply uniformly in continuous operation by power spray or roller according to manufacturer's written instructions. Recoat areas subjected to heavy rainfall within three hours after initial application. Maintain continuity of coating and repair damage during curing period.
4. Waterproof Paper: Apply waterproof paper in accordance with manufacturer’s recommendations in widths as wide as possible. Paper shall be lapped and seams taped with reinforced tape.

   a. For Interior Non-Exposed Concrete: Typical curing operation for all interior slabs with moisture sensitive floor coverings. Verify individual requirements with flooring manufacture.

5. Curing and Sealing Compound: Apply uniformly to floors and slabs indicated in a continuous operation by power spray or roller according to manufacturer's written instructions. Recoat areas subjected to heavy rainfall within three hours after initial application. Repeat process 24 hours later and apply a second coat. Maintain continuity of coating and repair damage during curing period.

3.12 JOINT FILLING

A. Prepare, clean, and install joint filler according to manufacturer's written instructions.

1. Defer joint filling till the completion of the project. Do not fill joints until construction traffic has permanently ceased.

B. Remove dirt, debris, saw cuttings, curing compounds, and sealers from joints; leave contact faces of joint clean and dry.

C. Install semirigid epoxy joint filler full depth in saw-cut joints and at least 2 inches deep in formed joints. Overfill joint and trim joint filler flush with top of joint after hardening.

D. Install isolation joints around columns in accordance with the drawings and manufacturer's recommendations.

E. Install perimeter isolation joints in accordance with the drawings and manufacturer's recommendations.

3.13 CONCRETE SURFACE REPAIRS

A. Defective Concrete: Repair and patch defective areas when approved by Engineer. Remove and replace concrete that cannot be repaired and patched to Architect's approval.

B. Patching Mortar: Mix dry-pack patching mortar, consisting of one part Portland cement to two and one-half parts fine aggregate passing a No. 16sieve, using only enough water for handling and placing.

C. Repairing Unformed Surfaces: Test unformed surfaces, such as floors and slabs, for finish and verify surface tolerances specified for each surface. Correct low and high areas. Test surfaces sloped to drain for trueness of slope and smoothness; use a sloped template.

1. Repair finished surfaces containing defects. Surface defects include spalls, popouts, honeycombs, rock pockets, crazing and cracks in excess of 0.01 inchwide or that penetrate to reinforcement or completely through unreinforced sections regardless of width, and other objectionable conditions.
2. After concrete has cured at least 14 days, correct high areas by grinding.
3. Correct localized low areas during or immediately after completing surface finishing operations by cutting out low areas and replacing with patching mortar. Finish repaired areas to blend into adjacent concrete.
4. Correct other low areas scheduled to receive floor coverings with a repair underlayment. Prepare, mix, and apply repair underlayment and primer according to manufacturer's written instructions to produce a smooth, uniform, plane, and level surface. Feather edges to match adjacent floor elevations.
5. Correct other low areas scheduled to remain exposed with a repair topping. Cut out low areas to ensure a minimum repair topping depth of 1/4 inchto match adjacent floor elevations. Prepare, mix, and apply repair topping and primer according to manufacturer's written instructions to produce a smooth, uniform, plane, and level surface.

6. Repair defective areas, except random cracks and single holes 1 inch r less in diameter, by cutting out and replacing with fresh concrete. Remove defective areas with clean, square cuts and expose steel reinforcement with at least 3/4 inchclearance all around. Dampen concrete surfaces in contact with patching concrete and apply bonding agent. Mix patching concrete of same materials and mix as original concrete except without coarse aggregate. Place, compact, and finish to blend with adjacent finished concrete. Cure in same manner as adjacent concrete.
7. Repair random cracks and single holes 1 inch or less in diameter with patching mortar. Groove top of cracks and cut out holes to sound concrete and clean off dust, dirt, and loose particles. Dampen cleaned concrete surfaces and apply bonding agent. Place patching mortar before bonding agent has dried. Compact patching mortar and finish to match adjacent concrete. Keep patched area continuously moist for at least 72 hours.

D. Repair materials and installation not specified above may be used, subject to Architect's approval.

3.14 FIELD QUALITY CONTROL

A. Testing Agency: Owner will engage a qualified independent testing and inspecting agency to sample materials, perform tests, and submit test reports during concrete placement. Sampling and testing for quality control may include those specified in this Article.

B. Concrete Testing Services: Testing of composite samples of fresh concrete obtained according to ASTM C 172 shall be performed according to the following requirements:

1. Testing Frequency: Obtain one composite sample for each day's pour of each concrete mix exceeding 5 cu. Yd, but less than 25 cu. yd. plus one set for each additional 50 cu. yd.or fraction thereof.
2. Testing Frequency: Obtain at least one composite sample for each 100 cu.yd. or fraction thereof of each concrete mix placed each day.

    a. When frequency of testing will provide fewer than five compressive-strength tests for each concrete mix, testing shall be conducted from at least five randomly selected batches or from each batch if fewer than five are used.

3. Slump: ASTM C 143; one test at point of placement for each composite sample, but not less than one test for each day's pour of each concrete mix. Perform additional tests when concrete consistency appears to change.
4. Air Content: ASTM C 231, pressure method, for normal-weight concrete; ASTM C 173, volumetric method, for structural lightweight concrete; one test for each composite sample, but not less than one test for each day's pour of each concrete mix.
5. Concrete Temperature: ASTM C 1064; one test hourly when air temperature is 40 deg F and below and when 80 deg Fand above, and one test for each composite sample.
6. Unit Weight: ASTM C 567, fresh unit weight of structural lightweight concrete; one test for each composite sample, but not less than one test for each day's pour of each concrete mix.
7. Compression Test Specimens: ASTM C 31/C 31M; cast and laboratory cure one set of four standard cylinder specimens for each composite sample.

a. Cast and field cure one set of four standard cylinder specimens for each composite sample.

8. Compressive-Strength Tests: ASTM C 39; test two laboratory-cured specimens at 7 days and two at 28 days.

a. Test two field-cured specimens at 7 days and two at 28 days.
b. A compressive-strength test shall be the average compressive strength from two specimens obtained from same composite sample and tested at age indicated.

C. Inspections:

1. Steel reinforcement placement.
2. Steel reinforcement welding.
3. Headed bolts and studs.
4. Verification of use of required design mixture.
5. Concrete placement, including conveying and depositing.
6. Curing procedures and maintenance of curing temperature.
7. Verification of concrete strength before removal of shores and forms from beams and slabs.

D. When strength of field-cured cylinders is less than 85 percent of companion laboratory-cured cylinders, Contractor shall evaluate operations and provide corrective procedures for protecting and curing in-place concrete.

E. Strength of each concrete mix will be satisfactory if every average of any three consecutive compressive-strength tests equals or exceeds specified compressive strength and no compressive-strength test value falls below specified compressive strength by more than 500 psi

F. Test results shall be reported in writing to Architect, concrete manufacturer, and Contractor within 48 hours of testing. Reports of compressive-strength tests shall contain Project identification name and number, date of concrete placement, name of concrete testing and inspecting agency, location of concrete batch in Work, design compressive strength at 28 days, concrete mix proportions and materials, compressive breaking strength, and type of break for both 7-and 28-day tests.

G. Nondestructive Testing: Impact hammer, sonoscope, or other nondestructive device may be permitted by Architect but will not be used as sole basis for approval or rejection of concrete.

H. Additional Tests: Testing and inspecting agency shall make additional tests of concrete when test results indicate that slump, air entrainment, compressive strengths, or other requirements have not been met, as directed by Engineer. Testing and inspecting agency may conduct tests to determine adequacy of concrete by cored cylinders complying with ASTM C 42 or by other methods as directed by Engineer.

3.15 MISCELLANEOUS CONCRETE ITEM INSTALLATION

A. Filling In: Fill in holes and openings left in concrete structures after work of other trades is in place unless otherwise indicated. Mix, place, and cure concrete, as specified, to blend with in-

place construction. Provide other miscellaneous concrete filling indicated or required to complete the Work.

B. Curbs: Provide monolithic finish to interior curbs by stripping forms while concrete is still green and by steel-troweling surfaces to a hard, dense finish with corners, intersections, and terminations slightly rounded.

C. Equipment Bases and Foundations:

1. Coordinate sizes and locations of concrete bases with actual equipment provided.
2. Construct concrete bases 4 inches high unless otherwise indicated and extend base not less than 6 inches in each direction beyond the maximum dimensions of supported equipment unless otherwise indicated or unless required for seismic anchor support.
3. Minimum Compressive Strength: 3500 psi at 28 days.
4. Install dowel rods to connect concrete base to concrete floor. Unless otherwise indicated, install dowel rods on 18-inch centers around the full perimeter of concrete base.
5. For supported equipment, install epoxy-coated anchor bolts that extend through concrete base and anchor into structural concrete substrate.
6. Prior to pouring concrete, place and secure anchorage devices. Use setting drawings, templates, diagrams, instructions, and directions furnished with items to be embedded.
7. Cast anchor-bolt insert into bases. Install anchor bolts to elevations required for proper attachment to supported equipment.

END OF SECTION 03 30 00

SECTION 04 50 00 – MASONRY RESTORATION AND CLEANING

PART 1 - GENERAL

1.1 RELATED DOCUMENTS

A. Drawings and general provisions of the Contract, including General and Supplementary Conditions and other Division 1 Specification Sections, apply to this Section.

B. Section 01 22 00 Unit prices

C. Section 07 92 00 Joint sealants

1.2 SUMMARY

A. This work shall consist of furnishing all labor, material and equipment necessary to replace missing brickwork and repointing and recaulking and masonry cleaning as shown on plans and quantified in the specifications.
   1. Brickwork is to match existing with re-used materials or new materials.

1.3 WORK INCLUDED

A. Protection of adjacent non-masonry surfaces.

B. Cleaning masonry surfaces.

C. Repointing mortar joints.

D. Removing and rebuilding of Brick veneer.

E. Replacing broken brick.

F. Brick Cleaning.

G. Joint Sealant Removal/Replacement.

1.4 DELIVERY, STORAGE AND HANDLING

A. Deliver masonry neatly stacked and tied on pallets. Store clear of ground with adequate waterproof covering.

B. Furnish restoration cleaner materials in manufacturer's packaging, complete with instructions for use.

1.5 ENVIRONMENTAL REQUIREMENTS

A. Do not lay masonry or stonework, repoint, caulk, wash down or wet surfaces when temperature may drop below 40 degrees F (4 degrees C) within 24 hours. Follow cold weather procedures as set out in ANSI A41.1 when temperatures may drop below 40 degrees F (4 degrees C).

1.6 PROTECTION

A. Protect windows, doorways, trim and other surfaces from damage and immediately remove stains, efflorescence, or other unsightly excess resulting from the work of this section.

B. Protect roof membranes and flashings from damage. Lay 1/2-inch plywood on roof surfaces over full extent of work area and traffic route.

PART 2 - PRODUCTS

2.1 MATERIALS

A. Cleaning Agent: Detergent type as manufactured by Sure Klean or approved equal.

B. Water: Clean, potable.

C. Mortar: Prehydrated Type N mortar.

1. 1 part Portland Cement.
2. 1 part S Hydrated lime.
3. 6 parts sand, proportional by volume.
4. Color to match existing.

D. Hydrated Lime: ASTM C 207.

E. Brick: Match existing.

PART 3 - EXECUTION

3.1 PREPARATION

A. Carefully remove and store fixtures, fittings, finishing hardware and accessories.

B. Construct dustproof and weatherproof partitions to close off occupied areas from work of this section.

C. Protect roof surface below with appropriate covers.

3.2 RESTORATION CLEANING

A. Clean surfaces and remove large particles with wood scrapers or wire brush.

B. Brush masonry with Sure Klean restoration cleaner mixed into solution in strict accordance with the manufacturer's instructions.

C. Provide a second application if required by preliminary test of sample area.

D. Allow sufficient time for solution to remain on masonry and agitate with soft fiber brush or sponge.

E. Rinse from the bottom up with potable water applied at street pressure.

3.3 REBUILDING

A. Cut out damaged and deteriorated masonry with care in a manner to prevent damage to adjacent remaining materials.

1. See unit cost section

B. Shore structure as necessary in advance of cutting out units.

C. Cut away loose or unsound masonry and mortar to provide firm and solid bearing for new work.

D. Build in new reclaimed masonry units following procedures to match adjacent work.

E. Mortar Mix: Colored to match existing adjacent - Type N.

F. Ensure that anchors, ties, reinforcing, stone cramps, dowels and flashings are correctly located and built in.

G. Build in masonry work to match and align with existing, with joints and coursing true and level, faces plumb and in line. Build in all openings, accessories and fittings.

3.4 TUCK POINTING

A. Cut out loose or disintegrated mortar in joints to a 3/4-inch minimum depth with power tools taking care not to damage adjacent face of brickwork.

B. Do not damage masonry units.

C. When cutting is complete, remove dust and loose material by brushing or with water jet.

D. Apply Type N mortar, packed tightly in thin layers, leaving a smooth, compact joint to match existing in local area.

3.5 CLEANING

A. Promptly, as work proceeds and upon completion, remove excess mortar, smears and droppings.

B. Clean adjacent and adjoining surface of marks arising out of execution of work of this section.

C. Hand wash brick with a mild solution of muriatic acid. No pressure is permitted.

D. Sweep up and remove daily sand, cleaning compounds and mixtures, dirt, debris and rubbish.

END OF SECTION

SECTION 05 31 00 - STEEL DECK

PART 1 - GENERAL

1.1 RELATED DOCUMENTS

A. Drawings and general provisions of the Contract, including General and Supplementary Conditions and Division 1 Specification Sections, apply to this Section.

1.2 SUMMARY

A. This Section includes the following:
   1. Composite Floor deck.

B. Related Sections include the following:

   1. Division 5 Section "Structural Steel".
   2. Division 5 Section "Metal Fabrications" for framing deck openings with miscellaneous steel shapes.

1.3 SUBMITTALS

A. Product Data: For each type of deck, accessory, and product indicated.

B. Shop Drawings: Show layout and types of deck panels, anchorage details, reinforcing channels, pans, deck openings, special jointing, accessories, and attachments to other construction.

C. Product Certificates: Signed by steel deck manufacturers certifying that products furnished comply with requirements.

D. Welding Certificates: Copies of certificates for welding procedures and personnel.

1.4 QUALITY ASSURANCE

A. Installer Qualifications: An experienced installer who has completed steel deck similar in material, design, and extent to that indicated for this Project and whose work has resulted in construction with a record of successful in-service performance.

B. Welding: Qualify procedures and personnel according to AWS D1.1, "Structural Welding Code--Steel," and AWS D1.3, "Structural Welding Code--Sheet Steel."

C. AISI Specifications: Calculate structural characteristics of steel deck according to AISI's "Specification for the Design of Cold-Formed Steel Structural Members."

1.5 DELIVERY, STORAGE, AND HANDLING

A. Protect steel deck from corrosion, deformation, and other damage during delivery, storage, and handling.

B. Stack steel deck on platforms or pallets and slope to provide drainage. Protect with a waterproof covering and ventilate to avoid condensation.

1.6 PROJECT CONDITIONS

A. Design:

1. Steel deck shall be designed in accordance with the AISI "Specifications for the Design of Cold-Formed Steel Structural Members." Simple short spans shall be avoided, and all deck units shall extend over three or more supports unless absolutely impractical.
2. Design Loads: As specified on the drawings.

PART 2 - PRODUCTS

2.1 FLOOR DECK

A. Composite Steel Floor Deck: Fabricate panels, with integrally embossed or raised pattern ribs and interlocking side laps, to comply with "SDI Specifications and Commentary for Composite Steel Floor Deck," in SDI Publication No. 29, the minimum section properties indicated, and the following:

1. Galvanized Steel Sheet: ASTM A1008-00, Grades C and D, or from A653-00, Structural Steel with a minimum yield strength of 40 KSI.
2. Profile Depth: 1-1/2 inches (38 mm).
3. Design Uncoated-Steel Thickness: 20 gage (0.0474 inch).
4. Span Condition: Triple span.
5. Side Laps: #12 Tek Screws at 16” o.c. spacing.
6. Slab Reinforcement: #4 @ 8” on center both ways.
7. Fastening: #12 Tek screws on 36/4 pattern.
8. Minimum interior bearing length is 4".

2.2 ACCESSORIES

A. General: Provide manufacturer's standard accessory materials for deck that comply with requirements indicated.

B. Reinforcing Plates: Provide .057” thick reinforcing plates for all openings less than 12 inches in diameter. Length and width of plates as required satisfying The Steel Deck Institute requirements.

C. Mechanical Fasteners: Corrosion-resistant, low-velocity, power-actuated or pneumatically driven carbon-steel fasteners; or self-drilling, self-threading screws.

D. Side-Lap Fasteners: Corrosion-resistant, hexagonal washer head; self-drilling, carbon-steel screws, No. 12 minimum diameter.

E. Flexible Closure Strips: Vulcanized, closed-cell, synthetic rubber.

F. Miscellaneous Sheet Metal Deck Accessories: Steel sheet, minimum yield strength of 33,000 psi, not less than 0.0359-inch design uncoated thickness, of same material and finish as deck; of profile indicated or required for application.

G. Steel Sheet Accessories: Steel sheet, of same material, finish, and thickness as deck, unless otherwise indicated.

H. End Closures: Provide end closures of minimum 22 gauge to close the ends at end walls, eaves, and openings through the roof.

I. Weld Washers: Uncoated steel sheet, shaped to fit deck rib, thickness as required by manufacturer.

PART 3 - EXECUTION

3.1 EXAMINATION

A. Examine supporting frame and field conditions for compliance with requirements for installation tolerances and other conditions affecting performance.

3.2 INSTALLATION, GENERAL

A. Install deck panels and accessories according to applicable specifications and commentary in SDI Publication No. 29, manufacturer's written instructions, and requirements in this Section.

B. Install temporary shoring before placing deck panels, if required to meet deflection limitations.

C. Locate decking bundles to prevent overloading of supporting members.

1. Exercise special care not to damage the material or overload the decking during the entire construction period. The maximum uniform distribution storage load shall not exceed the design live load.

D. Place deck panels on supporting frame and adjust to final position with ends accurately aligned and bearing on supporting frame before being permanently fastened. Do not stretch or contract side-lap interlocks.

1. Simple short spans shall be avoided, and all deck units shall extend over three or more supports unless absolutely impractical. Do not use unanchored deck units as a work or storage platform.

E. Place deck panels flat and square and fasten to supporting frame without warp or deflection.

F. Cut and neatly fit deck panels and accessories around openings and other work projecting through or adjacent to decking. Reinforce and frame openings through roof in accordance with the drawings for rigidity and load-carrying capacity. Holes or other openings required for the work of other trades shall be drilled or cut and reinforced by the respective trades; the deck manufacturer and the Engineer shall approve such holes or other openings larger than 6 inches in diameter.

G. Provide additional reinforcement and closure pieces at openings as required for strength, continuity of decking, and support of other work.

H. Comply with AWS requirements and procedures for manual shielded metal arc welding, appearance and quality of welds, and methods used for correcting welding work.

3.3 DECK INSTALLATION

A. Immediately after placement and alignment, and after inaccuracies have been corrected, permanently fasten steel roof deck and floor deck units in place. Clamp or weight deck units to provide firm contact between deck units and structural supports while fastening is being performed. Decking shall be fastened as recommended by the manufacturer unless indicated otherwise on the drawings.

B. End Bearing: Install deck ends over supporting frame as per drawings or unless otherwise noted, with a minimum end bearing of 1-1/2 inches, with end joints as follows:

1. End Joints: Lapped 2 inches minimum

3.4 REPAIRS AND PROTECTION

A. Repair Painting: Wire brush and clean rust spots, welds, and abraded areas on both surfaces of deck immediately after installation, and apply repair paint.

B. Provide final protection and maintain conditions to ensure that steel deck is without damage or deterioration at time of Substantial Completion.

END OF SECTION

SECTION 05 50 00 - METAL FABRICATIONS

PART 1 - GENERAL

1.1 RELATED DOCUMENTS

A. Drawings and general provisions of the Contract, including General and Supplementary Conditions and Division 1 Specification Sections, apply to this Section.

1.2 SUMMARY

A. Section Includes:
1. Applications where framing and supports are not specified in other sections
2. Internal half-wall support structure
3. Light fixture supports.
4. Miscellaneous steel trim including loading-dock edge angles.
5. Structural steel door frames.
6. Metal bollards.

B. Products furnished, but not installed, under this Section:

1. Anchor bolts, steel pipe sleeves, slotted-channel inserts, and wedge-type inserts indicated to be cast into concrete or built into unit masonry.

1.3 PERFORMANCE REQUIREMENTS

A. Structural Performance: Design, engineer, fabricate, and install the following metal fabrications to withstand the following structural loads without exceeding the allowable design working stress of the materials involved, including anchors and connections. Apply each load to produce the maximum stress in each respective component of each metal fabrication.

1.4 SUBMITTALS

A. Shop Drawings: Show fabrication and installation details for metal fabrications.

1. Include plans, elevations, sections, and details of metal fabrications and their connections. Show anchorage and accessory items.

B. Delegated-Design Submittal: For installed products indicated to comply with performance requirements and design criteria, including analysis data signed and sealed by the qualified professional engineer responsible for their preparation.

C. Welding certificates.

1.5 QUALITY ASSURANCE

A. Fabricator Qualifications: Firm experienced in successfully producing metal fabrications similar to that indicated for this Project, with sufficient production capacity to produce required units without causing delay in the Work.

B. Welding Qualifications: Qualify procedures and personnel according to AWS D1.1/D1.1M, "Structural Welding Code - Steel."

C. Welding Qualifications: Qualify procedures and personnel according to the following:

1. AWS D1.1/D1.1M, "Structural Welding Code - Steel."

D. Engineer Qualifications: Professional engineer licensed to practice in jurisdiction where project is located and experienced in providing engineering services of the kind indicated that have resulted in the successful installation of metal fabrications similar in material, design, and extent to that indicated for this Project.

1.6 PROJECT CONDITIONS

A. Field Measurements: Verify actual locations of walls and other construction contiguous with metal fabrications by field measurements before fabrication.

1.7 COORDINATION

A. Coordinate selection of shop primers with topcoats to be applied over them. Comply with paint and coating manufacturers' written recommendations to ensure that shop primers and topcoats are compatible with one another.

B. Coordinate installation of anchorages and angles for casting into concrete. Furnish setting drawings, templates, and directions for installing anchorages, including sleeves, concrete inserts, anchor bolts, and items with integral anchors, that are to be embedded in concrete or masonry. Deliver such items to Project site in time for installation.

PART 2 - PRODUCTS

2.1 METALS, GENERAL

A. Metal Surfaces, General: Provide materials with smooth, flat surfaces unless otherwise indicated. For metal fabrications exposed to view in the completed Work, provide materials without seam marks, roller marks, rolled trade names, or blemishes.

2.2 FERROUS METALS

A. Recycled Content of Steel Products: Provide products with average recycled content of steel products so postconsumer recycled content plus one-half of preconsumer recycled content is not less than 25 percent.

B. Steel Plates, Shapes, and Bars: ASTM A 36/A 36M.

C. Steel Tubing: ASTM A 500, cold-formed steel tubing.

D. Steel Pipe: ASTM A 53/A 53M, standard weight (Schedule 40) unless otherwise indicated.

2.3 FASTENERS

A. General: Unless otherwise indicated, provide Type 304 stainless-steel fasteners for exterior use and zinc-plated fasteners with coating complying with ASTM B 633 or ASTM F 1941, Class Fe/Zn 5, at exterior walls. Select fasteners for type, grade, and class required.

B. Steel Bolts and Nuts: Regular hexagon-head bolts, ASTM A 307, Grade A; with hex nuts, ASTM A 563; and, where indicated, flat washers.

C. Steel Bolts and Nuts: Regular hexagon-head bolts, ASTM A 325, Type 3; with hex nuts, ASTM A 563, Grade C3; and, where indicated, flat washers.

D. Stainless-Steel Bolts and Nuts: Regular hexagon-head annealed stainless-steel bolts, ASTM F 593; with hex nuts, ASTM F 594; and, where indicated, flat washers; Alloy Group 1.

E. Anchor Bolts: ASTM F 1554, Grade 36, of dimensions indicated; with nuts, ASTM A563; and, where indicated, flat washers.

1. Hot-dip galvanize or provide mechanically deposited, zinc coating where item being fastened is indicated to be galvanized.

F. Machine Screws: ASME B18.6.3.

G. Lag Screws: ASME B18.2.1.

H. Wood Screws: Flat head, ASME B18.6.1.

I. Plain Washers: Round, ASME B18.22.1.

J. Lock Washers: Helical, spring type, ASME B18.21.1.

K. Anchors, General: Anchors capable of sustaining, without failure, a load equal to six times the load imposed when installed in unit masonry and four times the load imposed when installed in concrete, as determined by testing according to ASTM E 488, conducted by a qualified independent testing agency.

L. Cast-in-Place Anchors in Concrete: Either threaded type or wedge type unless otherwise indicated; galvanized ferrous castings, either ASTM A 47/A 47M malleable iron or ASTM A 27/A 27M cast steel. Provide bolts, washers, and shims as needed, all hot-dip galvanized per ASTM F 2329.

M. Post-Installed Anchors: Torque-controlled expansion anchors or chemical anchors.

1. Material for Interior Locations: Carbon-steel components zinc plated to comply with ASTM B 633 or ASTM F 1941, Class Fe/Zn 5, unless otherwise indicated.

2. Material for Exterior Locations and Where Stainless Steel is Indicated: Alloy Group 1 stainless-steel bolts, ASTM F 593, and nuts, ASTM F 594.

2.4 MISCELLANEOUS MATERIALS

A. Welding Rods and Bare Electrodes: Select according to AWS specifications for metal alloy welded.

B. Universal Shop Primer: Fast-curing, lead- and chromate-free, universal modified-alkyd primer complying with MPI#79 and compatible with topcoat.

1. Use primer containing pigments that make it easily distinguishable from zinc-rich primer.

C. Galvanizing Repair Paint: High-zinc-dust-content paint complying with SSPC-Paint 20 and compatible with paints specified to be used over it.

D. Bituminous Paint: Cold-applied asphalt emulsion complying with ASTM D 1187.

1. Available Products:

a. Sealmastic, Type 1; W. R. Meadows
b. Hydrocide 600; Sonneborn Building Products.
c. Karnak 100 AF; Karnac Chemical Corp.

E. Nonshrink, Nonmetallic Grout: Factory-packaged, nonstaining, noncorrosive, nongaseous grout complying with ASTM C 1107. Provide grout specifically recommended by manufacturer for interior and exterior applications.

1. Available Products:

a. Five Star Grout by Five Star Products, Inc.
b. Masterflow 928 Grout by Master Builders Technologies.
c. Sonogrout 10K by Sonneborn.
d. 14K Hy Flow by Sonneborn.

F. Concrete: Comply with requirements in Division 3 Section "Cast-in-Place Concrete" for normal-weight, air-entrained, concrete with a minimum 28-day compressive strength of 3000 psi.

2.5 FABRICATION, GENERAL

A. Shop Assembly: Preassemble items in the shop to greatest extent possible. Disassemble units only as necessary for shipping and handling limitations. Use connections that maintain structural value of joined pieces. Clearly mark units for reassembly and coordinated installation.

B. Cut, drill, and punch metals cleanly and accurately. Remove burrs and ease edges to a radius of approximately 1/32 inch unless otherwise indicated. Remove sharp or rough areas on exposed surfaces.

C. Form bent-metal corners to smallest radius possible without causing grain separation or otherwise impairing work.

D. Form exposed work with accurate angles and surfaces and straight edges.

E. Weld corners and seams continuously to comply with the following:

1. Use materials and methods that minimize distortion and develop strength and corrosion resistance of base metals.
2. Obtain fusion without undercut or overlap.
3. Remove welding flux immediately.
4. At exposed connections, finish exposed welds and surfaces smooth and blended so no roughness shows after finishing and contour of welded surface matches that of adjacent surface.

F. Form exposed connections with hairline joints, flush and smooth, using concealed fasteners or welds where possible. Where exposed fasteners are required, use Phillips flat-head (countersunk) fasteners unless otherwise indicated. Locate joints where least conspicuous.

G. Fabricate seams and other connections that will be exposed to weather in a manner to exclude water. Provide weep holes where water may accumulate.

H. Cut, reinforce, drill, and tap metal fabrications as indicated to receive finish hardware, screws, and similar items.

I. Provide for anchorage of type indicated; coordinate with supporting structure. Space anchoring devices to secure metal fabrications rigidly in place and to support indicated loads.

1. Where units are indicated to be cast into concrete or built into masonry, equip with integrally welded steel strap anchors, 1/8 by 1-1/2 inches, with a minimum 6-inch embedment and 2-inch hook, not less than 8 inches from ends and corners of units and 24 inches o.c., unless otherwise indicated.

2.6 MISCELLANEOUS FRAMING AND SUPPORTS

A. General: Provide steel framing and supports not specified in other Sections as needed to complete the Work.

B. Fabricate units from steel shapes, plates, and bars of welded construction unless otherwise indicated. Fabricate to sizes, shapes, and profiles indicated and as necessary to receive adjacent construction.

1. Furnish inserts for units installed after concrete is placed.

C. Galvanize miscellaneous framing and supports where indicated.

2.7 STRUCTURAL-STEEL DOOR FRAMES

A. Fabricate structural-steel door frames from steel shapes, plates, and bars of size and to dimensions indicated, fully welded together, with 5/8-by-1-1/2-inch steel channel stops, unless otherwise indicated. Plug-weld built-up members and continuously weld exposed joints. Secure removable stops to frame with countersunk machine screws, uniformly spaced at not more than 10 inches o.c. Reinforce frames and drill and tap as necessary to accept finish hardware.

1. Provide with integrally welded steel strap anchors for securing door frames into adjoining concrete or masonry.

B. Extend bottom of frames to floor elevation indicated with steel angle clips welded to frames for anchoring frame to floor with expansion shields and bolts.

C. Galvanize exterior steel frames.

2.8 CONCRETE FILL AND REINFORCING MATERIALS

A. Concrete Materials and Properties: Comply with requirements of Section 03 30 00 Cast-in-PlaceConcrete

B. Reinforcing Bars: ASTM A 615, Grade 60, unless otherwise indicated. Retain first subparagraph below if required; delete if bollards are concrete filled.

2.9 STEEL ANGLES

A. Provide steel angles not specified in other Sections, for items supported from concrete construction as needed to complete the Work. Provide each unit with no fewer than two integrally welded steel strap anchors for embedding in concrete.

2.10 FINISHES, GENERAL

A. Comply with NAAMM's "Metal Finishes Manual for Architectural and Metal Products" for recommendations for applying and designating finishes.

B. Finish metal fabrications after assembly.

C. Finish exposed surfaces to remove tool and die marks and stretch lines, and to blend into surrounding surface.

2.11 STEEL AND IRON FINISHES

A. Galvanizing: Provide coating for iron and steel fabrications applied by the hot-dipped process, Durogalv by Duncan Galvanizing. The galvanizing bath shall contain high grade zinc and other earthly materials. Immediately before galvanizing, the steel shall be immersed in a bath of zinc ammonium chloride. The use of the wet kettle process is prohibited. Comply with ASTM

A123 for fabricated products and ASTM A 153 for hardware. Provide thickness of galvanizing specified in referenced standards.

B. Shop prime iron and steel items not indicated to be galvanized unless they are to be embedded in concrete, sprayed-on fireproofing, or masonry, or unless otherwise indicated.

1. Shop prime with universal shop primer unless indicated.

C. Preparation for Shop Priming: Prepare surfaces to comply with SSPC-SP 3, "Power Tool Cleaning."

1. Exterior Items: SSPC-SP 6/NACE No. 3, "Commercial Blast Cleaning."

D. Shop Priming: Apply shop primer to comply with SSPC-PA 1, "Paint Application Specification No. 1: Shop, Field, and Maintenance Painting of Steel," for shop painting.

1. Stripe paint corners, crevices, bolts, welds, and sharp edges.

PART 3 - EXECUTION

3.1 INSTALLATION, GENERAL

A. Cutting, Fitting, and Placement: Perform cutting, drilling, and fitting required for installing metal fabrications. Set metal fabrications accurately in location, alignment, and elevation; with edges and surfaces level, plumb, true, and free of rack; and measured from established lines and levels.

B. Fit exposed connections accurately together to form hairline joints. Weld connections that are not to be left as exposed joints but cannot be shop welded because of shipping size limitations. Do not weld, cut, or abrade surfaces of exterior units that have been hot-dip galvanized after fabrication and are for bolted or screwed field connections.

C. Field Welding: Comply with the following requirements:

1. Use materials and methods that minimize distortion and develop strength and corrosion resistance of base metals.
2. Obtain fusion without undercut or overlap.
3. Remove welding flux immediately.
4. At exposed connections, finish exposed welds and surfaces smooth and blended so no roughness shows after finishing and contour of welded surface matches that of adjacent surface.

D. Fastening to In-Place Construction: Provide anchorage devices and fasteners where metal fabrications are required to be fastened to in-place construction. Provide threaded fasteners for use with concrete and masonry inserts, toggle bolts, through bolts, lag screws, wood screws, and other connectors.

E. Provide temporary bracing or anchors in formwork for items that are to be built into concrete, masonry, or similar construction.

3.2 INSTALLING MISCELLANEOUS FRAMING AND SUPPORTS

A. General: Install framing and supports to comply with requirements of items being supported, including manufacturers' written instructions and requirements indicated on Shop Drawings.

3.3 ROUGH HARDWARE

A. Furnish bent or otherwise custom fabricated bolts, plates, anchors, hangers, dowels, and other miscellaneous steel and iron shapes as required for framing and supporting woodwork, and for anchoring or securing woodwork to concrete or other structures. Straight bolts and other stock rough hardware items are specified in Division 6 sections.

B. Fabricate items to sizes, shapes, and dimensions required.

3.4 LOOSE BEARING AND LEVELING PLATES

A. Provide loose bearing and leveling plates for steel items bearing on masonry or concrete construction, made flat, free from warps or twists, and of required thickness and bearing area. Drill plates to receive anchor bolts and for grouting as required. Galvanize after fabrication.

3.5 LOOSE LINTLES

A. Provide loose galvanized steel lintels bearing on masonry, made free from warps or twists, and of required size and thickness as indicated within the drawings. Galvanize after fabrication.

3.6 ADJUSTING AND CLEANING

A. Touchup Painting: Immediately after erection, clean field welds, bolted connections, and abraded areas. Paint uncoated and abraded areas with the same material as used for shop painting to comply with SSPC-PA 1 for touching up shop-painted surfaces.

1. Apply by brush or spray to provide a minimum 2.0-mil dry film thickness.

B. Touchup Painting: Cleaning and touchup painting of field welds, bolted connections, and abraded areas of shop paint are specified in Division 9 painting Sections.

C. Galvanized Surfaces: Clean field welds, bolted connections, and abraded areas and repair galvanizing to comply with ASTM A 780.

END OF SECTION

06 10 00 - ROUGH CARPENTRY

PART 1 - GENERAL

1.1 DESCRIPTION

A. Includes all labor, materials, services, equipment and related items required for the complete installation of Rough Carpentry work as indicated by the Contract Documents.

B. Related Work:
1. Documents affecting work of this Section include, but are not necessarily limited to, General Conditions, Supplementary Conditions, and Sections in Division 1 of these specifications.

1.2 QUALITY ASSURANCE

A. Use adequate numbers of skilled workmen who are thoroughly trained and experienced in the necessary crafts and who are completely familiar with the specified requirements and the methods needed for proper performance of the work of this Section.

B. Meet Requirements and recommendations of applicable portions of Standard listed.

1.	Products Standards	PS
2.	American Plywood Association	APA, DFPA
3.	Architectural Woodwork Institute	AWI
4.	American Wood Preservers Institute	AWPI
5.	National Forest Products Association	NFPA
6.	Southern Pine Inspection Bureau	SPIB

C. Material Grading
1. The grades of the materials used shall be defined by the rules of the recognized associations of lumber manufacturers producing the material specified, but the maximum defects permissible in any specific grade shall not exceed the limitations of the American Lumber Standards.
2. Defects expressly prohibited by this Section shall not appear in the material used, even if permissible in the grade specifications.
3. The sized specified are nominal board measure dimensions unless otherwise noted.

1.3 SUBMITTALS

A. Submit product data in accordance with Section 01 33 23.

B. Certification:
1. Pressure treated wood: Submit certification by treating plant stating chemicals and process used, net amounts of salts retained, and conformance with applicable standards.
2. Preservation treated wood: Submit certification for water-borne preservative that moisture content was reduced to 19% maximum, after treatment.

1.4 PRODUCT HANDLING

A. Immediately upon delivery to the job site, place materials in an area protected from water.

B. Store materials a minimum of 6" above ground on framework or blocking and cover with protective waterproof covering providing for adequate air circulation and ventilation.

C. Do not store seasoned materials in wet or damp portions of building.

D. Protect fire retardant materials against high humidity and moisture during storage and erection.

E. Protect sheet materials from corner breakage and surface damage, while unloading.

F. Comply with pertinent provisions of Section 01 66 00.

PART 2 - PRODUCTS

2.1 MATERIALS

A. Bracing, Blocking and Grounds: Grade marked No. 2 com. Southern Yellow Pine or construction grade Douglas Fir or KD Spruce, moisture content under 19%, S4S. All wood blocking shall be fire treated.

B. Rough Hardware: Nails, spikes, screws, bolts, etc., shall be of the proper types and sizes, and used in such numbers and quantities as is the usual custom in good practice for securing the various items and members. Underlayment fasteners shall be 3d (1 1/4”) ring or screw shank nail, min. 12-1/2 gauge (0.999 in) shank diameter.

C. Plywood backer board at electrical, telephone, video and alarm equipment: 3/4” APA rated fire rated, A/C Plywood, Exterior. Paint finish black.

2.2 PRESERVATIVES

A. Use lumber pressure treated with a water-borne salt preservative, Wolman, Erdalith, or Chemowater Zinc Chloride in accordance with AWPI Specifications P-5 for abutting concrete or masonry in damp locations, where in contact with the ground, concrete, plaster, stucco or steel, including use for sills, plates, screeds, cant strips, blocking, nailers and bucks.

B. Reduce moisture content to 19% or less after treatment for 2" thick lumber.

C. Reduce moisture content to 23% or less after treatment for over 2" thick lumber.

D. Furnish certificate from lumber treating company showing treatment amount and moisture content after drying.

E. Brush coat surfaces that have been cut after treatment with preservatives.

PART 3 - EXECUTION

3.1 INSTALLATION

A. Cutting and Repairing: Do such work as normally required and done for mechanical and other trades.

B. Blocking: Furnish and install blocking, furring, brackets, etc., as required to properly carry out all work shown and reasonably inferred by the Drawings and Specifications.

C. Nailers and Wood Cants: Nailers, 2" stock unless otherwise noted, of the proper widths. Bevel nailers for concrete 1/2" both sides and properly place in forms. Bolt nailers in place on steel or masonry. Furnish ledgers bolted to wall in locations shown and as required.

D. Shoring: Furnish and place all necessary shoring and bracing of types and sizes best suited for the conditions to be met. Shoring must comply with all governing requirements.

E. Provide wood curbs, required blocking and cants around all openings through the roof indicated on all architectural, mechanical and electrical drawings. Check drawings for all trades and furnish for all openings indicated.

F. Studs for interior walls shall be solid and continuous from floor plates to double plate at trusses, and shall not be cut for straightening; warped studs shall be replaced.

G. Studs shall be doubled at all corners, openings, and beam bearing points, unless noted otherwise on the drawings.

H. Headers over openings in walls shall be as noted on structural drawings.

I. Plywood Backer Boards: 5/8” pressure treated plywood installed over gypsum board fastening into studs 8” o.c., typical. Seal all vertical joints, and top, bottom and ends with Tremco Sealant. Paint Black.

END OF SECTION

SECTION 06 20 13 - EXTERIOR FINISH CARPENTRY

PART 1 - GENERAL

1.1 RELATED DOCUMENTS

A. Drawings and general provisions of the Contract, including General and Supplementary Conditions and Division 01 Specification Sections, apply to this Section.

1.2 SUMMARY

A. Section Includes:

1. Exterior wood trim.
2. Wood Eave/Soffit Assemblies .

B. Related Requirements:

1. Section 06 10 53 "Rough Carpentry" for furring, blocking, and other carpentry work not exposed to view.

1.3 ACTION SUBMITTALS

A. Product Data: For each type of process and factory-fabricated product. Indicate component materials, dimensions, profiles, textures, and colors and include construction and application details.

B. Samples for Initial Selection: For each type of product involving selection of colors, profiles, or textures.

1.4 INFORMATIONAL SUBMITTALS

A. Compliance Certificates:

1. For lumber that is not marked with grade stamp.

B. Sample Warranties: For manufacturer's warranties.

1.5 DELIVERY, STORAGE, AND HANDLING

A. Stack lumber and plywood flat with spacers between each bundle to provide air circulation. Protect materials from weather by covering with waterproof sheeting, securely anchored. Provide for air circulation around stacks and under coverings.

1.6 FIELD CONDITIONS

A. Weather Limitations: Proceed with installation only when existing and forecast weather conditions permit work to be performed and at least one coat of specified finish can be applied without exposure to rain, snow, or dampness.

B. Do not install finish carpentry materials that are wet, moisture damaged, or mold damaged.

1. Indications that materials are wet or moisture damaged include, but are not limited to, discoloration, sagging, or irregular shape.
2. Indications that materials are mold damaged include, but are not limited to, fuzzy or splotchy surface contamination and discoloration.

PART 2 - PRODUCTS

2.1 MATERIALS, GENERAL

A. Lumber: DOC PS 20 and the following grading rules:

1. NeLMA: Northeastern Lumber Manufacturers' Association, "Standard Grading Rules for Northeastern Lumber."
2. NLGA: National Lumber Grades Authority, "Standard Grading Rules for Canadian Lumber."
3. RIS: Redwood Inspection Service, "Standard Specifications for Grades of California Redwood Lumber."
4. SPIB: The Southern Pine Inspection Bureau, "Standard Grading Rules for Southern Pine Lumber."

B. Softwood Plywood: DOC PS 1.

C. Hardboard: ANSI A135.4.

2.2 EXTERIOR TRIM

A. Lumber Trim for Painted Finish:
1. Species and Grade: Western red cedar, Grade A; NLGA, WCLIB, or WWPA.
2. Species and Grade: Eastern white pine, eastern hemlock-balsam fir-tamarack, eastern spruce, or white woods; D Select (Quality); NeLMA, NLGA, WCLIB, or WWPA.
3. Maximum Moisture Content: 19 percent.
4. Finger Jointing: Not allowed.
5. Face Surface: Surfaced (smooth).
6. Factory Priming: Factory coated on faces and edges with exterior primer compatible with topcoats specified.

B. Moldings for Painted Finish: WMMPA WM 4, P-grade wood moldings. Made from kiln-dried stock to patterns included in WMMPA WM 12.

1. Species: Western red or cedar Eastern white.
2. Finger Jointing: Not allowed.
3. Factory Priming: Factory coated on faces and edges with exterior primer compatible with topcoats specified.
4. Match existing stacked composition and contours.

2.3 PLYWOOD SOFFITS

A. Plywood Type: Exterior,.

1. Face Grade: 303-OC.
2. Face Grade: 303- 18-S.

B. Thickness: 1/2 inch.

C. Face Species: Western red cedar.

D. Pattern: Plain.

E. Surface: Smooth.

2.4 MISCELLANEOUS MATERIALS

A. Fasteners for Exterior Finish Carpentry: Provide nails or screws, in sufficient length to penetrate not less than 1-1/2 inches into wood substrate.

1. For face-fastening siding, provide ringed-shank siding nails or hot-dip galvanized-steel siding nails.
2. For prefinished items, provide matching prefinished aluminum fasteners where face fastening is required.
3. For applications not otherwise indicated, provide stainless-steel fasteners.

B. Wood Glue: Waterproof resorcinol glue recommended by manufacturer for exterior carpentry use.

C. Flashing: Comply with requirements in Section 07 62 00 "Sheet Metal Flashing and Trim" for flashing materials installed in exterior finish carpentry.

1. Horizontal Joint Flashing for Panel Siding: Preformed, prefinished-aluminum, Z-shaped flashing.

D. Insect Screening for Soffit Vents: Aluminum, 18-by-16-inch mesh.

2.5 FABRICATION

A. Back out or kerf backs of standing and running trim wider than 5 inches, except members with ends exposed in finished work.

B. Ease edges of lumber less than 1 inch in nominal thickness to 1/16-inch radius and edges of lumber 1 inch or more in nominal thickness to 1/8-inch radius.

PART 3 - EXECUTION

3.1 EXAMINATION

A. Examine substrates, with Installer present, for compliance with requirements for installation tolerances and other conditions affecting performance.

B. Examine finish carpentry materials before installation. Reject materials that are wet, moisture damaged, and mold damaged.

C. Proceed with installation only after unsatisfactory conditions have been corrected.

3.2 PREPARATION

A. Clean substrates of projections and substances detrimental to application.

B. Prime lumber and moldings to be painted, including both faces and edges, unless factory primed. Cut to required lengths and prime ends. Comply with requirements in Section 09 91 13 "Exterior Painting."

3.3 INSTALLATION, GENERAL

A. Do not use materials that are unsound, warped, improperly treated or finished, inadequately seasoned, or too small to fabricate with proper jointing arrangements.

1. Do not use manufactured units with defective surfaces, sizes, or patterns.

B. Install exterior finish carpentry level, plumb, true, and aligned with adjacent materials. Use concealed shims where necessary for alignment.

1. Scribe and cut exterior finish carpentry to fit adjoining work. Refinish and seal cuts as recommended by manufacturer.
2. Install to tolerance of 1/8 inch in 96 inches for level and plumb. Install adjoining exterior finish carpentry with 1/32-inch maximum offset for flush installation and 1/16-inch maximum offset for reveal installation.
3. Install stairs with no more than 3/16-inch variation between adjacent treads and risers and with no more than 3/8-inch variation between largest and smallest treads and risers within each flight.
4. Coordinate exterior finish carpentry with materials and systems in or adjacent to it. Provide cutouts for mechanical and electrical items that penetrate exterior finish carpentry.

3.4 STANDING AND RUNNING TRIM INSTALLATION

A. Install flat-grain lumber with bark side exposed to weather.

B. Install trim with minimum number of joints practical, using full-length pieces from maximum lengths of lumber available. Do not use pieces less than 24 inches long except where necessary.

1. Use scarf joints for end-to-end joints.
2. Stagger end joints in adjacent and related members.

C. Fit exterior joints to exclude water. Cope at returns and miter at corners to produce tight-fitting joints with full-surface contact throughout length of joint. Plane backs of casings to provide uniform thickness across joints, where necessary for alignment.

D. Where face fastening is unavoidable, countersink fasteners, fill surface flush, and sand unless otherwise indicated.

3.5 ADJUSTING

A. Replace exterior finish carpentry that is damaged or does not comply with requirements. Exterior finish carpentry may be repaired or refinished if work complies with requirements and shows no evidence of repair or refinishing. Adjust joinery for uniform appearance.

3.6 CLEANING

A. Clean exterior finish carpentry on exposed and semiexposed surfaces. Touch up factory-applied finishes to restore damaged or soiled areas.

3.7 PROTECTION

A. Protect installed products from damage from weather and other causes during construction.

B. Remove and replace finish carpentry materials that are wet, moisture damaged, and mold damaged.

1. Indications that materials are wet or moisture damaged include, but are not limited to, discoloration, sagging, or irregular shape.
2. Indications that materials are mold damaged include, but are not limited to, fuzzy or splotchy surface contamination and discoloration.

END OF SECTION

07 21 12 - THERMAL BATT INSULATION

PART 1 – GENERAL

1.1 RELATED DOCUMENTS

A. Drawings and general provisions of Contract including General and Supplementary Conditions and Division 1 specification sections apply to Work of this section. Comply with the requirements of Division 01 General Requirements Specifications for measurement and payment; coordination, sequencing, and scheduling; submittals; quality assurance; qualifications; delivery, storage and handling; existing conditions; source quality control field quality control; startup and commissioning; and closeout activities.

1.2 SECTION INCLUDES

A. Acoustical batt insulation.
B. Thermal batt insulation

1.3 PRICING AND PAYMENT PROCEDURES

A. Measurement and payment requirements: per Division 01 General Requirements

1.4 ADMINISTRATIVE REQUIREMENTS

A. Coordination, Sequencing and Scheduling: per Division 01 General Requirements

1.5 SYSTEM DESCRIPTION

A. System performance to provide continuity of thermal barrier and vapor retarder at building enclosure elements.

1.6 ENVIRONMENTAL REQUIREMENTS

A. Install insulation adhesives in accordance with manufacturer's instructions.

PART 2 – PRODUCTS

2.1 INSULATION MATERIALS

A. Sound Attenuation Batt Insulation: ASTM C 665, Type I & ASTM E 136, preformed glass fiber batt, conforming to the following:
   1. Sound Transmission Class:
      a. Interior Walls: 3 5/8" and 6” completely filling the stud depth.
   2. Facing: Unfaced.
   3. Manufacturer: Owens Corning or equal.
B. Exterior Stud Cavity Batts; Fiberglass Batt Insulation, unfaced complying with ASTM C665and meeting the following criteria:

1. ASTM C665 Type I.
2. Full width batt for use with steel studs space at 16"o.c. and 24" o.c..
3. Thermal Resistance Measured in accordance with ASTM C518, R-Value 19.
4. Unfaced: Surface burning characteristics, ASTM E84, Flame Spread 25 or less.
5. Indoor air quality" verified to be formaldehyde free by independent third party such as GREENGUARD.
6. Manufacturers:
   a. Owens Corning
   b. Johns Manville
   c. Certainteed
   d. Or approved equal.

2.2 ADHESIVES

A. Adhesive: Type recommended by insulation manufacturer for application.

2.3 ACCESSORIES

A. Vapor Retarder: 6 Mil poly vapor retarder

B. Tape: Polyester self-adhering type

PART 3 – EXECUTION

3.1 EXAMINATION AND PREPARATION

A. Verify that substrate, adjacent materials, and insulation boards are dry and ready to receive insulation and adhesive.

3.2 INSTALLATION - BATT INSULATION

A. Install insulation, ventilation baffles and vapor retarder in accordance with insulation manufacturer's instructions.

B. Install in exterior walls and ceiling spaces without gaps or voids.

C. Fit insulation tight in spaces. Leave no gaps or voids.

D. Install friction fit insulation tight to framing members, completely filling prepared spaces.

E. Place vapor retarder on warm side of insulation by securing in place. Extend vapor retarder tight to full perimeter of adjacent window and door frames and other items interrupting the plane of membrane. Tape seal in place.

END OF SECTION

07 21 40 - SPRAY FOAM INSULATION

PART 1 GENERAL

1.1 SECTION INCLUDES

A. Closed Cell Spray Foam Insulation.

1.2 RELATED SECTIONS

A. Section 04 20 00 – Unit Masonry Assemblies: CMU masonry insulation.

1.3 REFERENCES

A. ASTM C 518 - Standard Test Method for Steady-State Thermal Transmission Properties by Means of the Heat Flow Meter Apparatus.

B. ASTM C 177 - Standard Test Method for Steady-State Heat Flux Measurements and Thermal Transmission Properties by Means of the Guarded-Hot-Plate Apparatus.

C. ASTM C 1338 - Standard Test Method for Determining Fungi Resistance of Insulation Materials and Facings.

D. ASTM E 84 - Standard Test Method for Surface Burning Characteristics of Building Materials.

E. ASTM E 96 - Standard Test Methods for Water Vapor Transmission of Materials.

F. ASTM E 283 - Standard Test Method for Determining Rate of Air Leakage Through Exterior Windows, Curtain Walls, and Doors Under Specified Pressure Differences Across the Specimen.

G. ASTM D 1621 - Standard Test Method for Compressive Properties of Rigid Cellular Plastics.

H. ASTM D 1622 - Standard Test Method for Apparent Density of Rigid Cellular Plastics.

I. ASTM D 1623 - Standard Test Method for Tensile and Tensile Adhesion Properties of Rigid Cellular Plastics.

J. ASTM D 2126 - Standard Test Method for Response of Rigid Cellular Plastics to Thermal and Humid Aging.

K. ASTM D 2842 - Standard Test Method for Water Absorption of Rigid Cellular Plastics.

1.4 PERFORMANCE REQUIREMENTS

A. Conform to applicable code for flame and smoke, concealment, and over coat requirements.

1.5 SUBMITTALS

A. Submit under provisions of Section 01 33 23.

B. Product Data: Manufacturer's data sheets on each product to be used, including:
   1. Preparation instructions and recommendations.
   2. Storage and handling requirements and recommendations.
   3. Installation methods.

C. Manufacturer's Certificates: Certify products meet or exceed specified requirements.

1.6 QUALITY ASSURANCE

A. Manufacturer Qualifications: Manufacturer with a minimum of ten years experience manufacturing products in this section shall provide all products listed.

B. Installer Qualifications: Products listed in this section shall be installed by a single organization with at least five years experience successfully installing insulation on projects of similar type and scope as specified in this section.

C. Mock-Up: Provide a mock-up for evaluation of surface preparation techniques and application workmanship.
   1. Finish areas designated by Architect.
   2. Do not proceed with remaining work until workmanship is approved by Architect.
   3. Refinish mock-up area as required to produce acceptable work.

1.7 DELIVERY, STORAGE, AND HANDLING

A. Deliver and store products in manufacturer's unopened packaging bearing the brand name and manufacturer's identification until ready for installation.

B. Storage: Store materials in dry locations with adequate ventilation, protected from freezing rain, direct sunlight and excess heat and in such a manner to permit easy access for inspection and handling. Store at temperature between 55 and 80 degrees F (12.7 to 26.6 degrees C).

C. Handling: Handle materials to avoid damage.

1.8 PRE-APPLICATION MEETINGS

A. Convene minimum two weeks prior to starting work of this section.

1.9 SEQUENCING

A. Ensure that products of this section are supplied to affected trades in time to prevent interruption of construction progress.

1.10 PROJECT CONDITIONS

A. Maintain environmental conditions (temperature, humidity, and ventilation) within limits recommended by manufacturer for optimum results. Do not install products under environmental conditions outside manufacturer's absolute limits.

B. Do not apply insulation when substrate temperatures are under 40 degrees F (4.4 degrees C) prior to installation.

C. Surfaces must be dry prior to application of spray foam. Excess humidity may cause poor adhesion, and result in product failure.

D. To avoid overspray, product should not be applied when conditions are windy.

PART 2 PRODUCTS

2.1 MANUFACTURERS

A. Acceptable Manufacturer: CertainTeed Corp., Insulation Group, which is located at: 750 E. Swedesford Rd. P. O. Box 860 ; Valley Forge, PA 19482-0860; Toll Free Tel: 800-233-8990; Fax: 610-341-7940; Email: request info; Web: certainteed.com/CertainTeed/Pro/Design+Professional/Insulation

B. Requests for substitutions will be considered in accordance with provisions of Section 00 10 00 Basic Requirements.

2.2 SPRAY FOAM INSULATION

A. Insulation: HFC-blown type Closed Cell Foam: CertainTeed CertaSpray Closed Cell Foam is a medium-density, MDI-based polyurethane thermoset rigid foam. When CertaSpray A-side closed cell is mixed with CertaSpray B-side closed cell under pressure in a 1:1 volumetric ratio, they react and expand into a medium-density closed cell foam with an in-place core density of 1.9- 2.2 pcf:

1. Physical and Mechanical Properties:
   a. Core Density: 1.9-2.4 pcf when tested in accordance with ASTM D 1622.
   b. Thermal Resistance (aged): 5.8 less than or equal to 2-1/2 inches / 6.4 when greater than 2-1/2 inches when tested in accordance with ASTM C 518 at 75 degrees F, (h-ft2- degrees F)/Btu.
   c. Thermal Resistance (initial): 6.4 when tested in accordance with ASTM C 518 at 75 degrees F, (h-ft2- degrees F)/Btu.
   d. Closed Cell Content: 88-95 percent when tested in accordance with ASTM D 2842.
   e. Compressive Strength: Greater than 25 psi when tested in accordance with ASTM D 1621.
   f. Tensile Strength: 23 psi when tested in accordance with ASTM D 1623.
   g. Water Absorption: Less than 2 percent by volume when tested in accordance with ASTM D 2842.
   h. Dimensional Stability: Less than 9 percent by volume when tested in accordance with ASTM D 2126 at 75 degrees F/95 percent RH, 28 Day.
   i. Water Vapor Transmission: 1.3 perm/inch when tested in accordance with ASTM E 96.
   j. Air Permeability: 0.013 when tested in accordance with ASTM E 283 at 1 inch thickness, L/s/m2.

k. Fungi Resistance: Pass, with no growth when tested in accordance with ASTM C 1338.

2. Fire performance
   a. Flame Spread: Less than 25 when tested in accordance with ASTM E 84.
   b. Smoke: Less than 450 when tested in accordance with ASTM E 84.
3. Thermal Performance (aged): Tested in accordance with ASTM C 518 and/or ASTM C 177 at 75 degrees F (24 degrees C) mean temperature.
   a. Thickness 2 inches (51 mm), R-Value 11.6 (h-ft2-degreesF)/Btu (2.0 (m2-degreesC)/W).

2.3 ACCESSORIES

A.Primer: As required by insulation manufacturer for adhesion to substrate.
1. Interior Flat and Non-Flat Paints: Maximum volatile organic compound content in accordance with GS-11.

B.Overcoat: Provide approved Ignition Barrier at all locations of exposed foam insulation, spray applied, type approved by the State Fire Marshal to provide a 15 minute thermal barrier and to achieve required flame spread/smoke developed index.
1.Acceptable products:
a.International Fireproof Technology Inc. DC333
b.TPR2 Fireshell F10E
c.Cafco TB-415
2.Install as per manufacturers instructions.

PART 3 EXECUTION

3.1 EXAMINATION

A. Do not begin installation until substrates have been properly moisture tested and prepared.

B. The contractor shall complete relative concrete wall moisture testing as recommended by the manufacturer. Do not undertake spray foam installation until the moisture content is acceptable to the manufacturer.

C. Verify that all exterior and interior wall, partition, and floor/ceiling assembly construction has been completed to the point where the insulation may correctly be installed.

D. Verify that the substrate and cavities are dry and free of any foreign material that will impede application.

E. Verify that mechanical and electrical services in ceilings, walls and floors have been installed and tested and, if appropriate, verify that adjacent materials are dry and ready to receive insulation.

F. If substrate preparation is the responsibility of another installer, notify Architect of

unsatisfactory preparation before proceeding.

3.2 PREPARATION

A. Clean surfaces thoroughly prior to installation.

B. Prepare surfaces using the methods recommended by the manufacturer for achieving the best result for the substrate under the project conditions.

C. Mask and protect adjacent surfaces from overspray or dusting.

3.3 INSTALLATION

A. Install in accordance with manufacturer's instructions. Product must be installed according to local code, and must be applied by a qualified applicator.

B. Apply insulation by spray method, to uniform monolithic density without voids.

C. Apply to minimum cured thickness as indicated on the Drawings or as scheduled at the end of this Section.

D. Apply to minimum cured thickness of 3" inches as indicated on the drawings.

E. Apply to achieve thermal resistance R-Value of 17.4.

F. Apply insulation to seal voids at truss ends to prevent wind scouring of ceiling insulation.

G. Seal plumbing stacks, electrical wiring and other penetrations into attic to control air leakage.

H. Apply insulation to fill voids around bathtubs to point of accessibility.

I. Apply insulation to fill voids around doors and windows. Apply insulation to fill voids around accessible service and equipment penetrations.

J. Do not install spray foam insulation in areas where it will be in contact with equipment or materials with operating temperatures of 180 degrees F (82 degrees C) or greater.

K. Apply insulation in unvented roof spaces and cathedral ceiling areas.

L. Where building is designed to meet the specific air tightness standards of the Energy Star Program, apply insulation as recommended by manufacturer to provide airtight construction. Apply sealant to joints between structural assemblies as specified in Division 7.

M. Patch damaged areas.

3.4 FIELD QUALITY CONTROL

A. Inspection will include verification of insulation and density.

3.5 PROTECTION

A. Protect installed products until completion of project.

B. Touch-up, repair or replace damaged products before Substantial Completion.

3.6 SCHEDULES

A. For the following locations, apply the average cured thickness indicated.
   1. Within Typical EIFS Wall Assembly: 3 inch application depth
   2. Within Typical Exterior Insulated Metal Panel Wall Assembly: 1 inch application depth

END OF SECTION

SECTION 07 31 26 - SLATE SHINGLES

PART 1 - GENERAL

1.1 RELATED DOCUMENTS

A. Drawings and general provisions of the Contract, including General and Supplementary Conditions and Division 01 Specification Sections, apply to this Section.

1.2 SUMMARY

A. Section Includes:

1. Slate shingles.
2. Underlayment.
3. Snow guards.

B. Related Sections:
1. Section 07 62 00 "sheet metal flashing and Trim" for Valley, Hip and Ridge cap flashing.

1.3 DEFINITIONS

A. Roofing Terminology: See ASTM D 1079 and glossary in NRCA's "The NRCA Roofing and Waterproofing Manual" for definitions of terms related to roofing work in this Section.

1.4 ACTION SUBMITTALS

A. Product Data: For each type of product indicated.

B. Samples for Initial Selection: Of each color, size, texture, and shape.

1. Include similar Samples of trim and accessories involving color selection.

C. Samples for Verification: For the following products, of sizes indicated, to verify color selected:

1. Slate Shingle: Full size, of each color, size, texture, and shape.
2. Fasteners: Three fasteners of each type, length, and finish.
3. Snow Guard: Base, bracket, and 12-inch-long rail.

1.5 INFORMATIONAL SUBMITTALS

A. Material Test Reports: Based on evaluation of comprehensive tests performed by a qualified testing agency, for each slate variety.

B. Warranty: Sample of special warranty.

1.6 QUALITY ASSURANCE

A. Source Limitations: Obtain each color of slate shingle from single quarry capable of producing slate of consistent quality in appearance and physical properties.

1.7 DELIVERY, STORAGE, AND HANDLING

A. Store underlayment rolls on end, on pallets or other raised surfaces. Do not double stack rolls.

1. Handle, store, and place roofing materials in a manner to avoid significant or permanent damage to roof deck or structural supporting members.

B. Protect unused underlayment from weather, sunlight, and moisture when left overnight or when roofing work is not in progress.

1.8 PROJECT CONDITIONS

A. Environmental Limitations: Proceed with installation of self-adhering sheet underlayment only within the range of ambient and substrate temperatures recommended by manufacturer.

1.9 WARRANTY

A. Special Warranty: Standard form in which roofing Installer agrees to repair or replace slate roofing that fails in materials or workmanship within specified warranty period.

1. Warranty Period: Two years from date of Substantial Completion.

PART 2 - PRODUCTS

2.1 SLATE SHINGLES

A. Slate Shingles: ASTM C 406, Grade S1; hard, dense, and sound; chamfered edges, with nail holes machine punched or drilled and countersunk. No broken or cracked slates, no broken exposed corners, and no broken corners on covered ends that could sacrifice nailing strength or laying of a watertight roof.

1. Manufacturers: Subject to compliance with requirements, available manufacturers offering products that may be incorporated into the Work include, but are not limited to, the following:

    a. American Slate Company.
    b. Black Diamond Slate.
    c. Burlington Natstone Inc.
    d. Echeguren Slate, Inc.
    e. Evergreen Slate Company.
    f. Greenstone Slate Company, Inc.
    g. New England Slate Company (The).
    h. North Country Slate.
    i. Slate International, Inc.
    j. Structural Slate Company (The).
    k. Tatko Stone Products, Inc.
    l. U.S. Quarried Slate Products, Inc.
    m. Vermont Structural Slate Company, Inc.
    n. Virginia Slate Company (The).
    o. Williams & Sons Slate & Tile, Inc.

2. Thickness: to match existing slate
3. Surface Texture: to match existing slate Shingles
4. Size: to match existing slate shingles
5. Nail Holes: Minimum two per shingle, may require more per shingle width and max spacing of 4”.
6. Butt Shape: Standard square cut.
7. Color: to match range of existing slate shingles

B. UNDERLAYMENT MATERIALS

1. Basis-of-Design Product: Subject to compliance with requirements, provide Henry Blueskin PE 200 HT or comparable product by one of the following:

    a. Carlisle Coatings & Waterproofing, Inc.
    b. Grace, W. R. & Co. - Conn.
    c. Henry Company.
    d. Johns Manville.
    e. Owens Corning.

2.2 SNOW GUARDS

A. Snow-Guard Rails: Units fabricated from metal baseplate anchored to fixed bracket and equipped with three bars.

1. Basis-of-Design Product: Subject to compliance with requirements, provide Alpine PP 125 3 pipe snow rails or comparable product by one of the following:

    a. Alpine SnowGuards, a division of Vermont Slate & Copper Services, Inc.
    b. M. J. Mullane Company, Inc.
    c. Sieger Snow Guards Inc.
    d. SnoGuard.

e. Snow Management Systems.
f. TRA-Mage, Inc.

2. Brackets and Baseplate: Aluminum.
3. Bars: Aluminum, clear anodized.

2.3 ACCESSORIES

A. Asphalt Roofing Cement: ASTM D 4586, Type II, asbestos free.

B. Butyl Sealant: ASTM C 1311, single-component, solvent-release butyl rubber sealant; polyisobutylene plasticized; heavy bodied.

C. Elastomeric Sealant: ASTM C 920, elastomeric polyurethane polymer sealant; of type, grade, class, and use classifications required to seal joints in slate-shingle roofing and remain watertight.

D. Slating Nails: ASTM F 1667, copper, or stainless-steel, smooth shanked, wire nails; 0.135-inch minimum thickness; sharp pointed; with 3/8-inch-minimum diameter flat head; of sufficient length to penetrate a minimum of 3/4 inch into sheathing.

1. Where nails are in contact with metal flashing, use nails made from same metal as flashing.

E. Ridge Cap and Hip cap: Custom-fabricated metal covers with noncorrosive components complete with internal anchoring lag screws, compression plates,

1. Basis-of-Design Product: Subject to compliance with requirements, provide product indicated on Drawings.
2. Type: Cap, nonventilating.
3. Metal Components: Copper, 24-oz./sq. ft.-thick sheet.
4. Accessories: Splices, end caps, and other accessories of matching metal and finish.

2.4 METAL FLASHING AND TRIM

A. General: Comply with requirements in Section 07 62 00 "Sheet Metal Flashing and Trim."

1. Sheet Metal: Copper.

B. Fabricate sheet metal flashing and trim to comply with recommendations that apply to design, dimensions, metal, and other characteristics of the item in SMACNA's "Architectural Sheet Metal Manual."

1. Apron Flashings:

a. Building A porch roof: Fabricate with lower flange extending a minimum of 6 inches over and 4 inches beyond each side of downslope slate shingles and 6 inches up the vertical surface.
b. Buildings D and C Main roofs at dormer or side wall intersections. Match current dimensions of in-place system.

2. Step Flashings: Fabricate with a head lap of 3 inches and a minimum extension of 5 inches both horizontally and vertically.
3. Hip Flashings: Fabricate to length of slate shingle and to extend 3 inches beyond joint of hip shingle with adjoining roof shingle.
4. Open-Valley Flashings: Fabricate in lengths not exceeding 10 feet with 1-inch-high, inverted-V profile at center of valley and equal flange widths of matching the current valley widths.
5. Drip Edges: Fabricate in lengths not exceeding 10 feet with 2-inch roof-deck flange and 1-1/2-inch fascia flange with 3/8-inch drip at lower edge.

PART 3 - EXECUTION

3.1 EXAMINATION

A. Examine substrates, areas, and conditions, with Installer present, for compliance with requirements for installation tolerances and other conditions affecting performance of the Work.

1. Examine roof sheathing to verify that sheathing joints are supported by framing and blocking or metal clips and that installation is within flatness tolerances.
2. Verify that substrate is sound, dry, smooth, clean, sloped for drainage, and completely anchored and that provision has been made for flashings and penetrations through roofing.

B. Prepare written report, endorsed by Installer, listing conditions detrimental to performance of the Work.

C. Proceed with installation only after unsatisfactory conditions have been corrected.

3.2 UNDERLAYMENT INSTALLATION

A. General: Comply with underlayment manufacturer's written installation instructions applicable to products and applications indicated unless more stringent requirements apply.

B. Self-Adhering Sheet Underlayment: Install, wrinkle free, on roof deck. Comply with low-temperature installation restrictions of underlayment manufacturer if applicable. Install at locations indicated below, lapped in direction to shed water. Lap sides not less than 3-1/2 inches. Lap ends not less than 6 inches, staggered 24 inches between courses. Roll laps with roller. Cover underlayment within seven days.

1. Building A Porch roof: Apply to full roof surface and turn up 4 inches under step flashing.
2. Valleys: Extend from lowest to highest point 12 inches on each side.
3. Hips: Apply to full open areas beneath hip flashing and up over slate 2” minimum.
4. Ridges: Apply to full open areas beneath hip flashing and up over slate 2” minimum.
5. Sidewalls: Extend 8 inches beyond sidewalls and return vertically against sidewalls not less than 4 inches.
6. Roof-Slope Transitions: Extend 12 inches on each roof slope.

3.3 METAL FLASHING INSTALLATION

A. General: Install metal flashings and other sheet metal to comply with requirements in Section 07 62 00 "Sheet Metal Flashing and Trim."

1. Install metal flashings according to recommendations in NRCA's "The NRCA Roofing and Waterproofing Manual."

B. Apron Flashings: Extend lower flange over and beyond each side of downslope slate shingles and up the vertical surface.

C. Hip Flashings: Install centrally over hip with lower edge of flashing concealed by butt of overlying slate shingle. Fasten to roof deck.

D. Open-Valley Flashings: Install centrally in valleys, lapping ends at least 8 inches in direction to shed water. Fasten upper end of each length to roof deck beneath overlap.

1. Secure hemmed flange edges into metal cleats spaced 12 inches apart and fastened to roof deck.
2. Adhere 9-inch- wide strips of self-adhering sheet to metal flanges and to self-adhering sheet underlayment.

3.4 SLATE-SHINGLE INSTALLATION

A. Install first and succeeding shingle courses with chamfered face up. Install full-width first course at rake edge.

1. Offset joints of uniform-width slate shingles by half the shingle width in succeeding courses.
2. Offset joints of random-width slate shingles a minimum of 3 inches in succeeding courses.

B. Match existing and adjacent minimum head lap between succeeding shingle courses.

C. Maintain uniform exposure of shingle courses midway between eaves and ridge and increase head lap of succeeding shingle courses to ensure uniform exposure on remaining shingle courses.

D. Extend shingle starter course and first course to match existing over fasciae at eaves.

E. Extend shingle starter course and succeeding courses to match existing over fasciae at rakes.

F. Cut and fit slate neatly around roof vents, pipes, ventilators, and other projections through roof.

G. Hang slate with minimum of 2 slating nails (4” max on-center spacing) for each shingle with nail heads lightly touching slate. Do not drive nails home drawing slates downward or leave nail head protruding enough to interfere with overlapping shingle above.

3.5 SNOW-GUARD INSTALLATION

A. Snow-Guard Rails: Install 3 rows of snow-guard rails at locations indicated according to manufacturer's written installation instructions. Manufacturer to provide design for locations and spacing of snow rail system.

3.6 ACCESSORIES INSTALLATION

A. Ridge Caps: Install units according to The NRCA Roofing and Waterproofing Manual.

3.7 ADJUSTING AND CLEANING

A. Remove and replace damaged or broken slate shingles.

B. Remove excess slate and debris from Project site.

3.8 ROOFING INSTALLER'S WARRANTY

A. WHEREAS <**Insert name**> of <**Insert address**>, herein called the "Roofing Installer," has performed roofing and associated work ("work") on the following project:

1. Owner: <**Insert name of Owner**>.
2. Address: <**Insert address**>.
3. Building Name/Type: <**Insert information**>.
4. Address: <**Insert address**>.
5. Area of Work: <**Insert information**>.
6. Acceptance Date: <**Insert date**>.
7. Warranty Period: <**Insert time**>.
8. Expiration Date: <**Insert date**>.

B. AND WHEREAS Roofing Installer has contracted (either directly with Owner or indirectly as a subcontractor) to warrant said work against leaks and faulty or defective materials and workmanship for designated Warranty Period,

C. NOW THEREFORE Roofing Installer hereby warrants, subject to terms and conditions herein set forth, that during Warranty Period he will, at his own cost and expense, make or cause to be made such repairs to or replacements of said work as are necessary to correct faulty and defective work and as are necessary to maintain said work in a watertight condition.

D. This Warranty is made subject to the following terms and conditions:

1. Specifically excluded from this Warranty are damages to work and other parts of the building, and to building contents, caused by:

   a. Lightning;
   b. Peak gust wind speed exceeding 90 mph;
   c. Fire;

d. Failure of roofing system substrate, including cracking, settlement, excessive deflection, deterioration, and decomposition;
e. Faulty construction of parapet walls, copings, chimneys, skylights, vents, equipment supports, and other edge conditions and penetrations of the work;
f. Vapor condensation on bottom of roofing; and
g. Activity on roofing by others, including construction contractors, maintenance personnel, other persons, and animals, whether authorized or unauthorized by Owner.

2. When work has been damaged by any of the foregoing causes, Warranty shall be null and void until such damage has been repaired by Roofing Installer and until cost and expense thereof have been paid by Owner or by another responsible party so designated.
3. Roofing Installer is responsible for damage to work covered by this Warranty but is not liable for consequential damages to building or building contents resulting from leaks or faults or defects of work.
4. During Warranty Period, if Owner allows alteration of work by anyone other than Roofing Installer, including cutting, patching, and maintenance in connection with penetrations, attachment of other work, and positioning of anything on roof, this Warranty shall become null and void on date of said alterations, but only to the extent said alterations affect work covered by this Warranty. If Owner engages Roofing Installer to perform said alterations, Warranty shall not become null and void unless Roofing Installer, before starting said work, shall have notified Owner in writing, showing reasonable cause for claim, that said alterations would likely damage or deteriorate work, thereby reasonably justifying a limitation or termination of this Warranty.
5. During Warranty Period, if original use of roof is changed and it becomes used for, but was not originally specified for, a promenade, work deck, spray-cooled surface, flooded basin, or other use or service more severe than originally specified, this Warranty shall become null and void on date of said change, but only to the extent said change affects work covered by this Warranty.
6. Owner shall promptly notify Roofing Installer of observed, known, or suspected leaks, defects, or deterioration and shall afford reasonable opportunity for Roofing Installer to inspect work and to examine evidence of such leaks, defects, or deterioration.
7. This Warranty is recognized to be the only warranty of Roofing Installer on said work and shall not operate to restrict or cut off Owner from other remedies and resources lawfully available to Owner in cases of roofing failure. Specifically, this Warranty shall not operate to relieve Roofing Installer of responsibility for performance of original work according to requirements of the Contract Documents, regardless of whether Contract was a contract directly with Owner or a subcontract with Owner's General Contractor.

E. IN WITNESS THEREOF, this instrument has been duly executed this <**Insert day**> day of <**Insert month**>, <**Insert year**>.

1. Authorized Signature: <**Insert signature**>.
2. Name: <**Insert name**>.
3. Title: <**Insert title**>.

END OF SECTION

SECTION 07 53 23 - ETHYLENE-PROPYLENE-DIENE-MONOMER (EPDM) ROOFING

PART 1 - GENERAL

1.1 RELATED DOCUMENTS

A. Drawings and general provisions of the Contract, including General and Supplementary Conditions and Division 01 Specification Sections, apply to this Section.

1.2 SUMMARY

A. Section Includes:

1. Adhered EPDM membrane roofing system.
2. Roof insulation.

B. Related Sections:

1. Section 06 10 53 "Miscellaneous Rough Carpentry" for wood nailers, curbs, and blocking.
2. Section 07 62 00 "Sheet Metal Flashing and Trim" for metal roof penetration flashings, flashings, and counter flashings.
3. Section 07 92 00 "Joint Sealants" for joint sealants, joint fillers, and joint preparation.

1.3 DEFINITIONS

A. Roofing Terminology: See ASTM D 1079 and glossary of NRCA's "The NRCA Roofing and Waterproofing Manual" for definitions of terms related to roofing work in this Section.

1.4 PERFORMANCE REQUIREMENTS

A. General Performance: Installed membrane roofing and base flashings shall withstand specified uplift pressures, thermally induced movement, and exposure to weather without failure due to defective manufacture, fabrication, installation, or other defects in construction. Membrane roofing and base flashings shall remain watertight.

B. Material Compatibility: Provide roofing materials that are compatible with one another under conditions of service and application required, as demonstrated by membrane roofing manufacturer based on testing and field experience.

C. Roofing System Design: Provide membrane roofing system that is identical to systems that have been successfully tested by a qualified testing and inspecting agency to resist uplift pressure presented below:

1. Uplift perimeter Zone Dimension 5.5 feet
2. Field Uplift -30.8.1 PSF

3. Perimeter Uplift -51.6 PSF
4. Corner Uplift -77.7 PSF

1.5 ACTION SUBMITTALS

A. Product Data: For each type of product indicated.

1.6 INFORMATIONAL SUBMITTALS

A. Qualification Data: For qualified Installer and manufacturer.

B. Manufacturer Certificate: Signed by roofing manufacturer certifying that membrane roofing system complies with requirements specified in "Performance Requirements" Article.

1. Submit evidence of complying with performance requirements.

C. Product Test Reports: Based on evaluation of comprehensive tests performed by manufacturer and witnessed by a qualified testing agency, for components of membrane roofing system.

D. Conduct pull out testing to determine proper fastener uplift requirement can be met

E. Warranties: Sample of special warranties.

1.7 CLOSEOUT SUBMITTALS

A. Maintenance Data: For membrane roofing system to include in maintenance manuals.

1.8 QUALITY ASSURANCE

A. Manufacturer Qualifications: A qualified manufacturer that is UL listed for membrane roofing system identical to that used for this Project.

B. Installer Qualifications: A qualified firm that is approved, authorized, or licensed by membrane roofing system manufacturer to install manufacturer's product and that is eligible to receive manufacturer's special warranty.

1. Roofing installer with a minimum of 5 years experience installing this type of roof system

C. Source Limitations: Obtain components including roof insulation fasteners for membrane roofing system from same manufacturer as membrane roofing or approved by membrane roofing manufacturer.

D. Exterior Fire-Test Exposure: ASTM E 108, Class A; for application and roof slopes indicated, as determined by testing identical membrane roofing materials by a qualified testing agency. Materials shall be identified with appropriate markings of applicable testing agency.

E. Fire-Resistance Ratings: Where indicated, provide fire-resistance-rated roof assemblies identical to those of assemblies tested for fire resistance per ASTM E 119 by a qualified testing agency. Identify products with appropriate markings of applicable testing agency.

F. Preinstallation Roofing Conference: Conduct conference at Project site.

1. Meet with Owner, Engineer, roofing installer, roofing system manufacturer's representative, and installers whose work interfaces with or affects roofing, including installers of roof accessories and roof-mounted equipment.
2. Review methods and procedures related to roofing installation, including manufacturer's written instructions.
3. Review and finalize construction schedule and verify availability of materials, Installer's personnel, equipment, and facilities needed to make progress and avoid delays.
4. Examine deck substrate conditions and finishes for compliance with requirements, including flatness and fastening.
5. Review structural loading limitations of roof deck during and after roofing.
6. Review base flashings, special roofing details, roof drainage, roof penetrations, equipment curbs, and condition of other construction that will affect roofing system.
7. Review governing regulations and requirements for insurance and certificates if applicable.
8. Review temporary protection requirements for roofing system during and after installation.
9. Review roof observation and repair procedures after roofing installation.

1.9 DELIVERY, STORAGE, AND HANDLING

A. Deliver roofing materials to Project site in original containers with seals unbroken and labeled with manufacturer's name, product brand name and type, date of manufacture, approval or listing agency markings, and directions for storing and mixing with other components.

B. Store liquid materials in their original undamaged containers in a clean, dry, protected location and within the temperature range required by roofing system manufacturer. Protect stored liquid material from direct sunlight.

1. Discard and legally dispose of liquid material that cannot be applied within its stated shelf life.

C. Protect roof insulation materials from physical damage and from deterioration by sunlight, moisture, soiling, and other sources. Store in a dry location. Comply with insulation manufacturer's written instructions for handling, storing, and protecting during installation.

D. Handle and store roofing materials and place equipment in a manner to avoid permanent deflection of deck.

1.10 PROJECT CONDITIONS

A. Weather Limitations: Proceed with installation only when existing and forecasted weather conditions permit roofing system to be installed according to manufacturer's written instructions and warranty requirements.

1.11 WARRANTY

A. Warranty: Manufacturer's standard or customized form, without monetary limitation, in which manufacturer agrees to repair or replace components of membrane roofing system that fail in materials or workmanship within specified warranty period.

1. Warranty includes membrane roofing, base flashings, roof insulation, fasteners, cover boards, substrate board, roofing accessories, and other components of membrane roofing system.
2. Warranty Period: 20 Twenty years from date of Substantial Completion.

PART 2 - PRODUCTS

2.1 EPDM MEMBRANE ROOFING

A. EPDM: ASTM D 4637, Type I, non-reinforced, uniform, flexible EPDM sheet.

1. Manufacturers: Subject to compliance with requirements, available manufacturers offering products that may be incorporated into the Work include, but are not limited to, the following:

a. Carlisle SynTec Incorporated.
b. Firestone Building Products.
c. Versico Incorporated.

2. Thickness: 60 mils, nominal.
3. Exposed Face Color: Black.

2.2 AUXILIARY MEMBRANE ROOFING MATERIALS

A. General: Auxiliary membrane roofing materials recommended by roofing system manufacturer for intended use and compatible with membrane roofing.

1. Liquid-type auxiliary materials shall comply with VOC limits of authorities having jurisdiction.

B. Sheet Flashing: 60-mil-thick EPDM, partially cured or cured, according to application.

C. Bonding Adhesive: Manufacturer's standard.

D. Seaming Material: Manufacturer's standard, synthetic-rubber polymer primer and 6-inch-wide minimum, butyl splice tape with release film.

E. Lap Sealant: Manufacturer's standard, single-component sealant, colored to match membrane roofing.

F. Water Cutoff Mastic: Manufacturer's standard butyl mastic sealant.

G. Metal Termination Bars: Manufacturer's standard, predrilled stainless-steel or aluminum bars, approximately 1 by 1/8 inch thick; with anchors.

H. Metal Battens: Manufacturer's standard, aluminum-zinc-alloy-coated or zinc-coated steel sheet, approximately 1 inch wide by 0.05 inch thick, prepunched.

I. Fasteners: Factory-coated steel fasteners and metal or plastic plates complying with corrosion-resistance provisions in FM Approvals 4470, designed for fastening insulation to substrate, and acceptable to roofing system manufacturer.

J. Miscellaneous Accessories: Provide pourable sealers, preformed cone and vent sheet flashings, preformed inside and outside corner sheet flashings, reinforced EPDM securement strips, T-joint covers, in-seam sealants, termination reglets, cover strips, and other accessories.

2.3 ROOF INSULATION

A. General: Preformed roof insulation boards manufactured or approved by EPDM membrane roofing manufacturer, selected from manufacturer's standard sizes suitable for application, of thicknesses indicated on the drawings.

B. Polyisocyanurate Board Insulation: ASTM C 1289, Type II, Class I, Grade 3, felt or glass-fiber mat facer on both major surfaces.

C. Provide preformed saddles, crickets, tapered edge strips, and other insulation shapes where indicated for sloping to drain. Fabricate to slopes indicated.

2.4 INSULATION ACCESSORIES

A. General: Furnish roof insulation accessories recommended by insulation manufacturer for intended use and compatibility with membrane roofing.

B. Fasteners: Factory-coated steel fasteners and metal plates complying with corrosion-resistance provisions in FM Approvals 4470, designed for fastening roof insulation and cover boards to substrate, and acceptable to roofing system manufacturer.

PART 3 - EXECUTION

3.1 EXAMINATION

A. Examine substrates, areas, and conditions, with Installer present, for compliance with the following requirements and other conditions affecting performance of roofing system:

1. Verify that roof openings and penetrations are in place and curbs are set and braced .
2. Verify that wood blocking, curbs, and nailers are securely anchored to roof deck at penetrations and terminations and that nailers match thicknesses of insulation.

B. Proceed with installation only after unsatisfactory conditions have been corrected.

3.2 PREPARATION

A. Conduct a factory pull test on the School house roof to verify it will meet wind uplift requirements.

B. Clean substrate of dust, debris, moisture, and other substances detrimental to roofing installation according to roofing system manufacturer's written instructions. Remove sharp projections.

C. Prevent materials from entering and clogging roof drains and conductors and from spilling or migrating onto surfaces of other construction. Remove roof-drain plugs when no work is taking place or when rain is forecast.

D. Complete terminations and base flashings and provide temporary seals to prevent water from entering completed sections of roofing system at the end of the workday or when rain is forecast. Remove and discard temporary seals before beginning work on adjoining roofing.

3.3 INSULATION INSTALLATION

A. Coordinate installing membrane roofing system components so insulation is not exposed to precipitation or left exposed at the end of the workday.

B. Comply with membrane roofing system and insulation manufacturer's written instructions for installing roof insulation.

C. Install insulation under area of roofing to achieve required thickness. Where overall insulation thickness is 2.7 inches or greater, install two or more layers with joints of each succeeding layer staggered from joints of previous layer a minimum of 6 inches in each direction.

D. Trim surface of insulation where necessary at roof drains so completed surface is flush and does not restrict flow of water.

E. Install insulation with long joints of insulation in a continuous straight line with end joints staggered between rows, abutting edges and ends between boards. Fill gaps exceeding 1/4 inch with insulation.

1. Cut and fit insulation within 1/4 inch of nailers, projections, and penetrations.

3.4 ADHERED MEMBRANE ROOFING INSTALLATION

A. Adhere membrane roofing over area to receive roofing according to membrane roofing system manufacturer's written instructions. Unroll membrane roofing and allow relaxing before installing.

B. Accurately align membrane roofing and maintain uniform side and end laps of minimum dimensions required by manufacturer. Stagger end laps.

C. Bonding Adhesive: Apply to substrate and underside of membrane roofing at rate required by manufacturer and allow to partially dry before installing membrane roofing. Do not apply to splice area of membrane roofing.

D. Apply membrane roofing with side laps shingled with slope of roof deck where possible.

E. Tape Seam Installation: Clean and prime both faces of splice areas, apply splice tape, and firmly roll side and end laps of overlapping membrane roofing according to manufacturer's written instructions to ensure a watertight seam installation. Apply lap sealant and seal exposed edges of membrane roofing terminations.

F. Repair tears, voids, and lapped seams in roofing that does not comply with requirements.

G. Spread sealant or mastic bed over deck drain flange at roof drains and securely seal membrane roofing in place with clamping ring.

3.5 BASE FLASHING INSTALLATION

A. Install sheet flashings and preformed flashing accessories and adhere to substrates according to membrane roofing system manufacturer's written instructions.

B. Apply bonding adhesive to substrate and underside of sheet flashing at required rate and allow to partially dry. Do not apply to seam area of flashing.

C. Flash penetrations and field-formed inside and outside corners with cured or uncured sheet flashing.

D. Clean splice areas, apply splicing cement, and firmly roll side and end laps of overlapping sheets to ensure a watertight seam installation. Apply lap sealant and seal exposed edges of sheet flashing terminations.

E. Terminate and seal top of sheet flashings and mechanically anchor to substrate through termination bars.

3.6 FIELD QUALITY CONTROL

A. Final Roof Inspection: Arrange for roofing system manufacturer's technical personnel to inspect roofing installation on completion.

B. Repair or remove and replace components of membrane roofing system where inspections indicate that they do not comply with specified requirements.

C. Additional inspections, at Contractor's expense, will be performed to determine compliance of replaced or additional work with specified requirements.

3.7 PROTECTING AND CLEANING

A. Protect membrane roofing system from damage and wear during remainder of construction period. When remaining construction will not affect or endanger roofing, inspect roofing for deterioration and damage, describing its nature and extent in a written report, with copies to Architect and Owner.

B. Correct deficiencies in or remove membrane roofing system that does not comply with requirements, repair substrates and repair or reinstall membrane roofing system to a condition free of damage and deterioration at time of Substantial Completion and according to warranty requirements.

C. Clean overspray and spillage from adjacent construction using cleaning agents and procedures recommended by manufacturer of affected construction.

END OF SECTION

SECTION 07 62 00 - SHEET METAL FLASHING AND TRIM

PART 1 - GENERAL

1.1 RELATED DOCUMENTS

A. Drawings and general provisions of the Contract, including General and Supplementary Conditions and Division 01 Specification Sections, apply to this Section.

1.2 SUMMARY

A. Section Includes:

1. Formed steep-slope roof sheet metal fabrications.
2. Low-sloped roofing metal fabrications.

B. Related Requirements:

1. Section 06 10 00 “ROUGH CARPENTRY” for wood nailers, and blocking.
2. Section 07 31 26 “SLATE SHINGLES” for materials and installation of sheet metal flashing and trim integral with roofing.
3. Section 07 53 23 “ EPDM ROOFING” for materials and installation of sheet metal flashing and trim integral with roofing.

1.3 COORDINATION

A. Coordinate sheet metal flashing and trim layout and seams with sizes and locations of penetrations to be flashed, and joints and seams in adjacent materials.

B. Coordinate sheet metal flashing and trim installation with adjoining roofing and wall materials, joints, and seams to provide leak-proof, secure, and noncorrosive installation.

1.4 PREINSTALLATION MEETINGS

1.5 ACTION SUBMITTALS

A. Product Data: For each type of product.

1. Include construction details, material descriptions, dimensions of individual components and profiles, and finishes for each manufactured product and accessory.

B. Shop Drawings: For sheet metal flashing and trim.

1. Include plans, elevations, sections, and attachment details.
2. Detail fabrication and installation layouts, expansion-joint locations, and keyed details. Distinguish between shop and field assembled work.
3. Include identification of material, thickness, weight, and finish for each item and location in Project.
4. Include details for forming, including profiles, shapes, seams, and dimensions.
5. Include details for joining, supporting, and securing, including layout and spacing of fasteners, cleats, clips, and other attachments. Include pattern of seams.
6. Include details of termination points and assemblies.
7. Include details of expansion joints and expansion-joint covers, including showing direction of expansion and contraction from fixed points.
8. Include details of roof-penetration flashing.
9. Include details of edge conditions, including eaves, ridges, valleys, rakes, crickets, and counter-flashings, as applicable.
10. Include details of special conditions.
11. Include details of connections to adjoining work.
12. Detail formed flashing and trim at scale of not less than 1-1/2 inches per 12 inches.

C. Samples for Initial Selection: For each type of sheet metal and accessory indicated with factory-applied finishes.

D. Samples for Verification: For each type of exposed finish.

1. Sheet Metal Flashing: 12 inches long by actual width of unit, including finished seam and in required profile. Include fasteners, cleats, clips, closures, and other attachments.
2. Trim, Metal Closures, Expansion Joints, Joint Intersections, and Miscellaneous Fabrications: 12 inches long and in required profile. Include fasteners and other exposed accessories.
3. Unit-Type Accessories and Miscellaneous Materials: Full-size Sample.
4. Anodized Aluminum Samples: Samples to show full range to be expected for each color required.

1.6 INFORMATIONAL SUBMITTALS

A. Qualification Data: For fabricator.

1.7 CLOSEOUT SUBMITTALS

A. Maintenance Data: For sheet metal flashing and trim, and its accessories, to include in maintenance manuals.

1.8 QUALITY ASSURANCE

A. Fabricator Qualifications: Employs skilled workers who custom fabricate sheet metal flashing and trim similar to that required for this Project and whose products have a record of successful in-service performance.

1.9 DELIVERY, STORAGE, AND HANDLING

A. Do not store sheet metal flashing and trim materials in contact with other materials that might cause staining, denting, or other surface damage. Store sheet metal flashing and trim materials away from uncured concrete and masonry.

B. Protect strippable protective covering on sheet metal flashing and trim from exposure to sunlight and high humidity, except to extent necessary for period of sheet metal flashing and trim installation.

1.10 WARRANTY

A. Special Warranty on Finishes: Manufacturer agrees to repair finish or replace sheet metal flashing and trim that shows evidence of deterioration of factory-applied finishes within specified warranty period.

1. Exposed Panel Finish: Deterioration includes, but is not limited to, the following:

a. Color fading more than 5 Hunter units when tested according to ASTM D 2244.
b. Chalking in excess of a No. 8 rating when tested according to ASTM D 4214.
c. Cracking, checking, peeling, or failure of paint to adhere to bare metal.

2. Finish Warranty Period: 20 years from date of Substantial Completion.

PART 2 - PRODUCTS

2.1 PERFORMANCE REQUIREMENTS

A. General: Sheet metal flashing and trim assemblies shall withstand wind loads, structural movement, thermally induced movement, and exposure to weather without failure due to defective manufacture, fabrication, installation, or other defects in construction. Completed sheet metal flashing and trim shall not rattle, leak, or loosen, and shall remain watertight.

B. Sheet Metal Standard for Flashing and Trim: Comply with NRCA's "The NRCA Roofing Manual" and SMACNA's "Architectural Sheet Metal Manual" requirements for dimensions and profiles shown unless more stringent requirements are indicated.

C. Sheet Metal Standard for Copper: Comply with CDA's "Copper in Architecture Handbook." Conform to dimensions and profiles shown unless more stringent requirements are indicated.

D. SPRI Wind Design Standard: Manufacture and install roof edge flashings tested according to SPRI ES-1 and capable of resisting the following design pressure:

1. Design Pressure: Building Roof Area B

a. Field: Uplift 18.8 psf
b. Perimeter : Uplift 31.5 psf

c. Corners: Uplift 47.5 psf
d. Edge Zone Dimension: 3 feet.

2. Design Pressure: Sloped Roofs Buildings A, C and D

a. Field: Uplift 21.0 psf
b. Perimeter : Uplift 23.8 psf
c. Corners: Uplift 23.8 psf
d. Edge Zone Dimension: 4 feet.

E. Thermal Movements: Allow for thermal movements from ambient and surface temperature changes to prevent buckling, opening of joints, overstressing of components, failure of joint sealants, failure of connections, and other detrimental effects. Base calculations on surface temperatures of materials due to both solar heat gain and nighttime-sky heat loss.

1. Temperature Change: 120 deg F, ambient; 180 deg F, material surfaces.

2.2 SHEET METALS

A. General: Protect mechanical and other finishes on exposed surfaces from damage by applying strippable, temporary protective film before shipping.

B. Copper Sheet: ASTM B 370, cold-rolled copper sheet, H00 or H01 temper.

1. Nonpatinated Exposed Finish: Mill.
2. Nonpatinated, Exposed, Lacquered Finish: Finish designations for copper alloys comply with system defined in NAAMM's "Metal Finishes Manual for Architectural and Metal Products."

a. Brushed Satin (Lacquered): M32-06x (Mechanical Finish: directionally textured, medium satin; with clear organic coating); coating of "Incralac," [**waterborne,**] [**solvent-borne,**] methyl methacrylate copolymer lacquer with UV inhibitor, applied by air spray in two coats per manufacturer's written instructions to total thickness of 1 mil.
b. Mirror Polished (Lacquered): M22-06x (Mechanical Finish: buffed, specular; with clear organic coating); coating of "Incralac," [**waterborne,**] [**solvent-borne,**] air-drying, methyl methacrylate copolymer lacquer with UV inhibitor, applied by air spray in two coats per manufacturer's written instructions to total thickness of 1 mil.

2.3 UNDERLAYMENT MATERIALS

A. Self-Adhering, High-Temperature Sheet: Minimum 40 mils thick, consisting of a slip-resistant polyethylene- or polypropylene-film top surface laminated to a layer of butyl- or SBS-modified asphalt adhesive, with release-paper backing; specifically designed to withstand high metal temperatures beneath metal roofing. Provide primer according to written recommendations of underlayment manufacturer.

1. Thermal Stability: ASTM D 1970; stable after testing at 240 deg F or higher.
2. Low-Temperature Flexibility: ASTM D 1970; passes after testing at minus 20 deg F or lower.

2.4 MISCELLANEOUS MATERIALS

A. General: Provide materials and types of fasteners, solder, protective coatings, sealants, and other miscellaneous items as required for complete sheet metal flashing and trim installation and as recommended by manufacturer of primary sheet metal unless otherwise indicated.

B. Fasteners: Wood screws, annular threaded nails, self-tapping screws, self-locking rivets and bolts, and other suitable fasteners designed to withstand design loads and recommended by manufacturer of primary sheet metal.

1. General: Blind fasteners or self-drilling screws, gasketed, with hex-washer head.

a. Exposed Fasteners: Heads matching color of sheet metal using plastic caps or factory-applied coating. Provide metal-backed EPDM or PVC sealing washers under heads of exposed fasteners bearing on weather side of metal.
b. Blind Fasteners: High-strength aluminum or stainless-steel rivets suitable for metal being fastened.

2. Fasteners for Copper Sheet: Copper, hardware bronze or passivated Series 300 stainless steel.

C. Solder:

1. For Copper: ASTM B 32, with maximum lead content of 0.2 percent.

D. Sealant Tape: Pressure-sensitive, 100 percent solids, polyisobutylene compound sealant tape with release-paper backing. Provide permanently elastic, nonsag, nontoxic, nonstaining tape 1/2 inch wide and 1/8 inch thick.

E. Elastomeric Sealant: ASTM C 920, elastomeric polyurethane polymer sealant; of type, grade, class, and use classifications required to seal joints in sheet metal flashing and trim and remain watertight.

F. Butyl Sealant: ASTM C 1311, single-component, solvent-release butyl rubber sealant; polyisobutylene plasticized; heavy bodied for hooked-type expansion joints with limited movement.

G. Asphalt Roofing Cement: ASTM D 4586, asbestos free, of consistency required for application.

2.5 FABRICATION, GENERAL

A. General: Custom fabricate sheet metal flashing and trim to comply with details shown and recommendations in cited sheet metal standard that apply to design, dimensions, geometry, metal thickness, and other characteristics of item required. Fabricate sheet metal flashing and trim in shop to greatest extent possible.

1. Fabricate sheet metal flashing and trim in thickness or weight needed to comply with performance requirements, but not less than that specified for each application and metal.
2. Obtain field measurements for accurate fit before shop fabrication.
3. Form sheet metal flashing and trim to fit substrates without excessive oil canning, buckling, and tool marks; true to line, levels, and slopes; and with exposed edges folded back to form hems.
4. Conceal fasteners and expansion provisions where possible. Do not use exposed fasteners on faces exposed to view.

B. Fabrication Tolerances: Fabricate sheet metal flashing and trim that is capable of installation to a tolerance of 1/4 inch in 20 feet on slope and location lines indicated on Drawings and within 1/8-inch offset of adjoining faces and of alignment of matching profiles.

C. Expansion Provisions: Form metal for thermal expansion of exposed flashing and trim.

1. Form expansion joints of intermeshing hooked flanges, not less than 1 inch deep, filled with butyl sealant concealed within joints.
2. Use lapped expansion joints only where indicated on Drawings.

D. Sealant Joints: Where movable, nonexpansion-type joints are required, form metal to provide for proper installation of elastomeric sealant according to cited sheet metal standard.

E. Fabricate cleats and attachment devices from same material as accessory being anchored or from compatible, noncorrosive metal.

F. Seams: Fabricate nonmoving seams with flat-lock seams. Form seams and seal with elastomeric sealant unless otherwise recommended by sealant manufacturer for intended use.

G. Do not use graphite pencils to mark metal surfaces.

2.6 LOW-SLOPE ROOF SHEET METAL FABRICATIONS

A. Roof Edge Flashing (Gravel Stop): Fabricate in minimum 96-inch-long, but not exceeding 12-foot-long sections. Furnish with 6-inch-wide, joint cover plates.

1. Joint Style: Butted with expansion space and 6-inch-wide, exposed cover plate as detailed.
2. Fabricate with scuppers spaced as shown on the drawings, to dimensions required with 4-inch-wide flanges and base extending 4 inches beyond cant or tapered strip into field of roof. Fasten gravel guard angles to base of scupper.
3. Fabricate from the Following Materials:

a. Aluminum: 0.032 inch thick.

B. Roof and Roof-to-Wall Transition Expansion-Joint Cover: Fabricate from the following materials: Shop fabricate interior and exterior corners.

1. Aluminum: 0.050 inch.

C. Counterflashing: Shop fabricate interior and exterior corners. Fabricate from the following materials:

1. Aluminum: 0.032 inch thick.

D. Downspouts: Fabricate open-face downspouts to dimensions indicated, complete with mitered elbows. Furnish with metal hangers from same material as downspouts and anchors .032 Aluminum. Shop fabricate elbows.

1. Hanger Style: as detailed.
2. Fabricate from the following materials:
3. Aluminum: 0.032 inch thick.

E. Parapet Scuppers: Fabricate scuppers to dimensions required, with closure flange trim to exterior, 4-inch-wide wall flanges to interior, and base extending 4 inches beyond cant or tapered strip into field of roof. Fasten gravel guard angles to base of scupper. Fabricate from the following materials:

1. Aluminum: 0.032 inch thick.

PART 3 - EXECUTION

3.1 EXAMINATION

A. Examine substrates, areas, and conditions, with Installer present, for compliance with requirements for installation tolerances, substrate, and other conditions affecting performance of the Work.

1. Verify compliance with requirements for installation tolerances of substrates.
2. Verify that substrate is sound, dry, smooth, clean, sloped for drainage, and securely anchored.
3. Verify that air- or water-resistant barriers have been installed over sheathing or backing substrate to prevent air infiltration or water penetration.

B. Proceed with installation only after unsatisfactory conditions have been corrected.

3.2 UNDERLAYMENT INSTALLATION

A. Self-Adhering Sheet Underlayment: Install self-adhering sheet underlayment, wrinkle free. Prime substrate if recommended by underlayment manufacturer. Comply with temperature restrictions of underlayment manufacturer for installation; use primer for installing underlayment at low temperatures. Apply in shingle fashion to shed water, with end laps of not less than 6 inches staggered 24 inches between courses. Overlap side edges not less than 3-1/2 inches. Roll laps and edges with roller. Cover underlayment within 14 days.

B. Apply slip sheet, wrinkle free, over underlayment before installing sheet metal flashing and trim.

3.3 INSTALLATION, GENERAL

A. General: Anchor sheet metal flashing and trim and other components of the Work securely in place, with provisions for thermal and structural movement. Use fasteners, solder, protective coatings, separators, sealants, and other miscellaneous items as required completing sheet metal flashing and trim system.

1. Install sheet metal flashing and trim true to line, levels, and slopes. Provide uniform, neat seams with minimum exposure of solder, welds, and sealant.
2. Install sheet metal flashing and trim to fit substrates and to result in watertight performance. Verify shapes and dimensions of surfaces to be covered before fabricating sheet metal.
3. Space cleats not more than 12 inches apart. Attach each cleat with at least two fasteners. Bend tabs over fasteners.
4. Install exposed sheet metal flashing and trim with limited oil canning, and free of buckling and tool marks.
5. Torch cutting of sheet metal flashing and trim is not permitted.
6. Do not use graphite pencils to mark metal surfaces.

B. Metal Protection: Where dissimilar metals contact each other, or where metal contacts pressure-treated wood or other corrosive substrates, protect against galvanic action or corrosion by painting contact surfaces with bituminous coating or by other permanent separation as recommended by sheet metal manufacturer or cited sheet metal standard.

1. Coat concealed side of uncoated-aluminum sheet metal flashing and trim with bituminous coating where flashing and trim contact wood, ferrous metal, or cementitious construction.
2. Underlayment: Where installing sheet metal flashing and trim directly on cementitious or wood substrates, install underlayment and cover with slip sheet.

C. Expansion Provisions: Provide for thermal expansion of exposed flashing and trim. Space movement joints at maximum of 10 feet with no joints within 24 inches of corner or intersection.

1. Form expansion joints of intermeshing hooked flanges, not less than 1 inch deep, filled with sealant concealed within joints.
2. Use lapped expansion joints only where indicated on Drawings.

D. Fasteners: Use fastener sizes that penetrate wood blocking or sheathing not less than 1-1/4 inches for nails and not less than 3/4 inch for wood screws.

E. Conceal fasteners and expansion provisions where possible in exposed work and locate to minimize possibility of leakage. Cover and seal fasteners and anchors as required for a tight installation.

F. Seal joints as required for watertight construction.

1. Use sealant-filled joints unless otherwise indicated. Embed hooked flanges of joint members not less than 1 inch into sealant. Form joints to completely conceal sealant. When ambient temperature at time of installation is between 40 and 70 deg F, set joint members for 50 percent movement each way. Adjust setting proportionately for

installation at higher ambient temperatures. Do not install sealant-type joints at temperatures below 40 deg F.

2. Prepare joints and apply sealants to comply with requirements in Section 07 92 00 "Joint Sealants."

G. Soldered Joints: Clean surfaces to be soldered, removing oils and foreign matter. Pre-tin edges of sheets with solder to width of 1-1/2 inches; however, reduce pre-tinning where pre-tinned surface would show in completed Work.

1. Do not use torches for soldering.
2. Heat surfaces to receive solder, and flow solder into joint. Fill joint completely. Completely remove flux and spatter from exposed surfaces.
3. Copper Soldering: Tin edges of uncoated sheets, using solder for copper.

3.4 ROOF-DRAINAGE SYSTEM INSTALLATION

A. General: Install sheet metal roof-drainage items to produce complete roof-drainage system according to cited sheet metal standard unless otherwise indicated. Coordinate installation of roof perimeter flashing with installation of roof-drainage system.

B. Downspouts: Join sections with 1-1/2-inch telescoping joints.

1. Provide hangers with fasteners designed to hold downspouts securely to walls. Locate hangers at top and bottom and at approximately 60 inches o.c.
2. Provide elbows at base of downspout to direct water away from building.
3. Connect downspouts to underground drainage system.

C. Parapet Scuppers: Continuously support scupper, set to correct elevation, and seal flanges to interior wall face, over cants or tapered edge strips, and under roofing membrane.

1. Anchor scupper closure trim flange to exterior wall and solder or seal with elastomeric sealant to scupper.
2. Loosely lock front edge of scupper with conductor head.
3. Solder or seal with elastomeric sealant exterior wall scupper flanges into back of conductor head.

D. Conductor Heads: Anchor securely to wall, with elevation of conductor head rim at minimum of 1 inch below scupper discharge.

E. Expansion-Joint Covers: Install expansion-joint covers at locations and of configuration indicated. Lap joints minimum of 4 inches in direction of water flow.

3.5 ROOF FLASHING INSTALLATION

A. General: Install sheet metal flashing and trim to comply with performance requirements sheet metal manufacturer's written installation instructions, and cited sheet metal standard. Provide concealed fasteners where possible, and set units true to line, levels, and slopes. Install work with laps, joints, and seams that are permanently watertight and weather resistant.

B. Roof Edge Flashing: Anchor to resist uplift and outward forces according to recommendations in cited sheet metal standard unless otherwise indicated. Interlock bottom edge of roof edge flashing with continuous cleat anchored to substrate at staggered 3-inch centers.

C. Roof Edge Flashing: Anchor to resist uplift and outward forces according to recommendations in FM Global Property Loss Prevention Data Sheet 1-49 for FM Approvals' listing for required windstorm classification.

3.6 WALL FLASHING INSTALLATION

A. General: Install sheet metal wall flashing to intercept and exclude penetrating moisture according to cited sheet metal standard unless otherwise indicated. Coordinate installation of wall flashing with installation of wall-opening components such as windows, doors, and louvers.

B. Reglets: Installation of reglets is specified in Section 04 20 00 "Unit Masonry."

3.7 MISCELLANEOUS FLASHING INSTALLATION

A. Equipment Support Flashing: Coordinate installation of equipment support flashing with installation of roofing and equipment. Weld or seal flashing with elastomeric sealant to equipment support member.

3.8 ERECTION TOLERANCES

A. Installation Tolerances: Shim and align sheet metal flashing and trim within installed tolerance of 1/4 inch in 20 feet on slope and location lines indicated on Drawings and within 1/8-inch offset of adjoining faces and of alignment of matching profiles.

3.9 CLEANING AND PROTECTION

A. Clean exposed metal surfaces of substances that interfere with uniform oxidation and weathering.

B. Clean and neutralize flux materials. Clean off excess solder.

C. Clean off excess sealants.

D. Remove temporary protective coverings and strippable films as sheet metal flashing and trim are installed unless otherwise indicated in manufacturer's written installation instructions. On completion of sheet metal flashing and trim installation, remove unused materials and clean finished surfaces as recommended by sheet metal flashing and trim manufacturer. Maintain sheet metal flashing and trim in clean condition during construction.

E. Replace sheet metal flashing and trim that have been damaged or that have deteriorated beyond successful repair by finish touchup or similar minor repair procedures.

END OF SECTION

07 84 13 - THROUGH-PENETRATION FIRESTOP SYSTEMS

PART 1 – GENERAL

1.1 RELATED DOCUMENTS

A. Drawings and general provisions of Contract, including General and Supplementary Conditions and Division-1 Specification Section, apply to work specified in this section. Comply with the requirements of Division 01 General Requirements Specifications for measurement and payment; coordination, sequencing, and scheduling; submittals; quality assurance; qualifications; delivery, storage and handling; existing conditions; source quality control field quality control; startup and commissioning; and closeout activities.

1.2 REFERENCES

A. Test Requirements: ASTM E 814, "Standard Method of Fire Tests of Through Penetration Fire Stops"

B. Test Requirements: UL 1479, “Fire Tests of Through-Penetration Firestops”

C. Underwriters Laboratories (UL) of Northbrook, IL publishes tested systems in their "FIRE RESISTANCE DIRECTORY" that is updated annually.
   1. UL Fire Resistance Directory:
      a. Firestop Devices (XHJI)
      b. Fire Resistance Ratings (BXRH)
      c. Through-Penetration Firestop Systems (XHEZ)
      d. Fill, Voids, or Cavity Material (XHHW)
      e. Forming Materials (XHKU)

D. International Firestop Council Guidelines for Evaluating Firestop Systems Engineering Judgments

E. ASTM E 84, Standard Test Method for Surface Burning Characteristics of Building Materials.

F. Inspection Requirements: ASTM E 2174, “Standard Practice for On-site Inspection of Installed Fire Stops.”

G. All major building codes: ICBO, SBCCI, BOCA, IBC and Building Code of the City of New York.

H. NFPA 101 - Life Safety Code

I. NFPA 70 - National Electric Code

1.3 THROUGH-PENETRATION UL CLASSIFICATION SYSTEM

Fire Stopping Systems UL Classification System

		Construction Penetrated	Type Of Construction	System Identification
1	No Penetrating Items	F, W, C	A, B, J, K, L	0001-0999
2	Metallic Pipes, Conduit or Tubing	F, W, C	A, B, J, K, L	1001-1999
3	Nonmetallic Pipe, Conduit or Tubing	F, W, C	A, B, J, K, L	2001-2999
4	Electric Cables	F, W, C	A, B, J, K, L	3001-3999
5	Cable, Trays with Electric Cables	F, W, C	A, B, J, K, L	4001-4999
6	Insulated Pipes	F, W, C	A, B, J, K, L	5001-5999
7	Electrical Bussduct Penetrations	F, W, C	A, B, J, K, L	6001-6999
8	Mechanical Ductwork Penetrations	F, W, C	A, B, J, K, L	7001-7999
9		F, W, C	A, B, J, K, L	8000-8999

Construction Penetration

F	Floor penetration
W	Wall penetration
C	Either floor or wall penetration

Type of Construction

A-
B-
J-
K-
L- Framed walls

1.4 PRICING AND PAYMENT PROCEDURES

A. Measurement and payment requirements: per Division 01 General Requirements

1.5 ADMINISTRATIVE REQUIREMENTS

A. Coordination, Sequencing and Scheduling: per Division 01 General Requirements

1.6 DEFINITIONS

A. Firestopping: Material or combination of materials used to retain integrity of fire-rated construction by maintaining an effective barrier against the spread of flame, smoke, and hot gases through penetrations in fire rated wall and floor assemblies.

1.7 GENERAL DESCRIPTION OF THE WORK OF THIS SECTION Only tested firestop systems shall be used in specific locations as follows:

A. Penetrations for the passage of duct, cable, cable tray, conduit, piping, electrical busways, and raceways through fire-rated vertical barriers (walls and partitions), horizontal barriers (floor/ceiling assemblies), and vertical service shaft walls and partitions.

B. Blank openings through fire-rated vertical barriers (walls and partitions), horizontal barriers (floor/ceiling assemblies), and vertical service shaft walls and partitions.

C. Openings and penetrations in fire-rated partitions or walls containing fire doors.

D. Openings around structural members which penetrate floors or walls.

1.8 RELATED WORK OF OTHER SECTIONS

A. Coordinate work of this section with work of other sections as required to properly execute the work and as necessary to maintain satisfactory progress of the work of other sections, including:

1. Section 07 90 00 - Joint Protection
2. Section 09 21 16 - Gypsum Board Assemblies
3. Mechanical Plumbing scopes of work
4. Fire Suppression scope of work
5. Division 26 – Electrical

1.9 QUALITY ASSURANCE

A. A manufacturer's direct representative (not distributor or agent) to be on-site during initial installation of firestop systems to train appropriate contractor personnel in proper selection and installation procedures. This will be done per manufacturer's written recommendations published in their literature and drawing details.

B. Firestop System installation must meet requirements of ASTM E 814 or UL 1479 tested assemblies that provide a fire rating equal to that of construction being penetrated.

C. Proposed firestop materials and methods shall conform to applicable governing codes having local jurisdiction.

D. Firestop Systems do not reestablish the structural integrity of load bearing partitions/assemblies, or support live loads and traffic. Installer shall consult the structural engineer prior to penetrating any load bearing assembly.

E. For those firestop applications that exist for which no qualified tested system is available through a manufacturer, an engineering judgment derived from similar qualified tested system designs or other tests will be submitted to local authorities having jurisdiction for their review and approval prior to installation. Engineering judgment documents must follow requirements set forth by the International Firestop Council.

1.10 SUBMITTALS

A. Submit Product Data: Manufacturer's specifications and technical data for each material including the composition and limitations, documentation of qualified tested firestop systems to be used for all project conditions. Include and manufacturer's installation instructions and all applicable UL Details.

B. Manufacturer's engineering judgment identification number and drawing details when no qualified tested system is available for an application. Engineering judgment must include

both project name and contractor's name who will install firestop system as described in document.

C. Submit material safety data sheets provided with product delivered to job-site.

D. Submit contractors qualifications demonstrating conformance with 1.08.

1.11 INSTALLER QUALIFICATIONS

A. Engage an experienced Installer dedicated to the application of firestopping systems who is certified, licensed, or otherwise qualified by the firestopping manufacturer as having been provided the necessary training to install manufacturer's products per specified requirements.

B. Firestopping products to the Contractor or to an Installer engaged by the Contractor does not in itself confer qualification on the buyer.

C. The work is to be installed by a contractor with at least one of the following qualifications:
1. FM 4991 Approved Contractor
2. UL Qualified Contractor
3. Hilti Accredited Firestop Specialty Contractor
4. Installer shall have not less than 3 years experience with fire stop installation.

1.12 DELIVERY, STORAGE, AND HANDLING

A. Deliver materials undamaged in manufacturer's clearly labeled, unopened containers, identified with brand, type, and UL label where applicable.

B. Coordinate delivery of materials with scheduled installation date to allow minimum storage time at job-site.

C. Store materials under cover and protect from weather and damage in compliance with manufacturer's requirements, including temperature restrictions.

D. Comply with recommended procedures, precautions or remedies described in material safety data sheets as applicable.

E. Do not use damaged or expired materials.

1.13 PROJECT CONDITIONS

A. Do not use materials that contain flammable solvents.

B. Schedule installation of firestopping after completion of penetrating item installation but prior to covering or concealing of openings.

E. Verify existing conditions and substrates before starting work. Correct unsatisfactory conditions before proceeding.

F. Weather conditions: Do not proceed with installation of firestop materials when temperatures exceed the manufacturer's recommended limitations for installation printed on product label and product data sheet.

G. During installation, provide masking and drop cloths to prevent firestopping materials from contaminating any adjacent surfaces.

PART 2 – PRODUCTS

2.1 FIRESTOPPING, GENERAL

A. Provide firestopping composed of components that are compatible with each other, the substrates forming openings, and the items, if any, penetrating the firestopping under conditions of service and application, as demonstrated by the firestopping manufacturer based on testing and field experience.

B. Provide components for each firestopping system that are needed to install fill material. Use only components specified by the firestopping manufacturer and approved by the qualified testing agency for the designated fire-resistance-rated systems.

C. Firestopping Materials are either “cast-in-place” (integral with concrete placement) or “post installed.” Provide cast-in-place firestop devices prior to concrete placement.

2.2 ACCEPTABLE MANUFACTURERS

A. Subject to compliance with through penetration firestop systems (XHEZ) listed in Volume II of the UL Fire Resistance Directory, provide products of the following manufacturer as identified below:

1. Expected level of quality for Fire Stopping: equivalent to Hilti, Inc., Tulsa, Oklahoma; 800-879-8000; www.us.hilti.com

2.3 MATERIALS

A. Use only firestop products that have been UL 1479 or ASTM E 814 tested for specific fire-rated construction conditions conforming to construction assembly type, penetrating item type, annular space requirements, and fire-rating involved for each separate instance.

B. Pre-installed firestop devices for use with noncombustible and combustible pipes (closed and open systems), conduit, and/or cable bundles penetrating concrete floors and/or gypsum walls, the following products are acceptable:

1. Hilti CP 680-P Cast-In Place Firestop Device
    a. Add Aerator adaptor when used in conjunction with aerator (“solvent”) system.
2. Hilti CP 681 Tub Box Kit for use with tub installations.
3. Hilti CP 680-M Cast-In Place Firestop Device for use with noncombustible penetrants.
4. Hilti CP 653 Speed Sleeve for use with cable penetrations.

C. All pass-through devices shall have the following Maximum L-Ratings:

1. Empty (No penetrant): <1 cfm / SF

2. Less than 100% Visual Fill: 5 cfm / SF (CAT 5 or 6)
3. 100% Visual Fill: 5 cfm / SF (CAT 5 or 6)
4. Hilti CFS-DID Drop-In Device

D. Sealants, caulking materials, or foams for use with non-combustible items including steel pipe, copper pipe, rigid steel conduit and electrical metallic tubing (EMT), the following products are acceptable:
1. Hilti FS-ONE Intumescent Firestop Sealant
2. Hilti CP 604 Self-leveling Firestop Sealant
3. Hilti CP 620 Fire Foam
4. Hilti CP 606 Flexible Firestop Sealant
5. Hilti CP 601s Elastomeric Firestop Sealant

E. Sealants or caulking materials for use with sheet metal ducts, the following products are acceptable:
1. Hilti CP 601s Elastomeric Firestop Sealant
2. Hilti CP 606 Flexible Firestop Sealant
3. Hilti FS-ONE Intumescent Firestop Sealant

F. Intumescent sealants, caulking materials for use with combustible items (penetrants consumed by high heat and flame) including insulated metal pipe, PVC jacketed, flexible cable or cable bundles and plastic pipe, the following products are acceptable:
1. Hilti FS-ONE Intumescent Firestop Sealant
2. Foams, intumescent sealants, or caulking materials for use with flexible cable or cable bundles, the following products are acceptable:
3. Hilti FS-ONE Intumescent Firestop Sealant
4. Hilti CP 620 Fire Foam
5. Hilti CP 601s Elastomeric Firestop Sealant
6. Hilti CP 606 Flexible Firestop Sealant

G. Non curing, re-penetrable, intumescent putty or foam materials for use with flexible cable or cable bundles, the following products are acceptable:
1. Hilti CP 618 Firestop Putty Stick
2. Hilti CFS-PL Firestop Plug

H. Wall opening protective materials for use with U.L. listed metallic and specified nonmetallic outlet boxes, the following products are acceptable:
1. Hilti CP 617 Firestop Putty Pad
2. Hilti Firestop Box Insert

I. Firestop collar or wrap devices attached to assembly around combustible plastic pipe (closed and open piping systems), the following products are acceptable:
1. Hilti CP 643N Firestop Collar
2. Hilti CP 644 Firestop Collar
3. Hilti CP 648E/648S Wrap Strips

J. Materials used for large openings and complex penetrations made to accommodate cable trays and bundles, multiple steel and copper pipes, electrical busways in raceways, the following products are acceptable:
1. Hilti CP 637 Firestop Mortar

2. Hilti CFS-BL Firestop Block
3. Hilti CP 620 Fire Foam
4. Hilti CP 675T Firestop Board

K. Non curing, re-penetrable materials used for large openings and complex penetrations made to accommodate cable trays and bundles, multiple steel and copper pipes, electrical busways in raceways, the following products are acceptable:
1. Hilti CFS-BL Firestop Block
2. Hilti CP 675T Firestop Board

L. For blank openings made in fire-rated wall or floor assemblies, where future penetration of pipes, conduits, or cables is expected, the following products are acceptable:
1. Hilti CFS-BL Firestop Block
2. Hilti CP 658T Firestop Plug

M. Provide a firestop system with a "F" Rating as determined by UL 1479 or ASTM E 814 which is equal to the time rating of construction being penetrated.

PART 3 – EXECUTION

3.1 PREPARATION

A. Verification of Conditions: Examine areas and conditions under which work is to be performed and identify conditions detrimental to proper or timely completion.
1. Verify penetrations are properly sized and in suitable condition for application of materials.
2. Surfaces to which firestop materials will be applied shall be free of dirt, grease, oil, rust, laitance, release agents, water repellents, and any other substances that may affect proper adhesion.
3. Provide masking and temporary covering to prevent soiling of adjacent surfaces by firestopping materials.
4. Comply with manufacturer's recommendations for temperature and humidity conditions before, during and after installation of firestopping.
5. Do not proceed until unsatisfactory conditions have been corrected.

3.2 COORDINATION

A. Coordinate location and proper selection of cast-in-place Firestop Devices with trade responsible for the work. Ensure device is installed before placement of concrete.

B. Responsible trades to provide adequate spacing of field run pipes to allow for installation of cast-in-place firestop devices without interferences.

3.3 INSTALLATION

A. Regulatory Requirements: Install firestop materials in accordance with UL Fire Resistance Directory.

B. Manufacturer's Instructions: Comply with manufacturer's instructions for installation of through- penetration materials.

C. Seal all holes or voids made by penetrations to ensure an air and water resistant seal.

D. Consult with mechanical engineer, project manager, and damper manufacturer prior to installation of UL firestop systems that might hamper the performance of fire dampers as it pertains to duct work.

E. Protect materials from damage on surfaces subjected to traffic.

F. Method Documentation and Labeling: The fire stopping contractor shall provide the following record of work documentation.

G. Documentation Binder: The contractor shall keep and maintain a project firestopping binder to be turned over to the owner upon project completion. The binder shall include the following;
   1. Photographic documentation of above ceiling firestopped conditions.
   2. All pertinent UL Details utilized for the project.
   3. All engineering judgements obtained during the course of the project.
   4. Manufacturers product information.
   5. Installed contact information.

H. Above Ceiling Firestopping Packet: At locations indicated by the building owner or architect, the contractor shall mount a clear paper holder to a wall surface above the ceiling. Each packet shall contain photographic records, UL details and engineering judgement documentation utilized within the applicable room or area demarked. Include within this packet product information and installed information.

I. Penetration Labeling: Each firestopped penetration shall be given a number based upon the building's master grid location system. This number shall be clearly written on the surface penetrated. A label shall also be adhered to the surface directly adjacent to the firestopped penetration. Each Label shall include a description the product or products utilized, the approved UL Detail utilized for the condition at hand, the company name and address of the installer and the date in which the work was completed.

J. Photograph wall areas and place hardcopy record images within the above referenced packets and binders above.

3.4 FIELD QUALITY CONTROL

A. Examine sealed penetration areas to ensure proper installation before concealing or enclosing areas.

B. Keep areas of work accessible until inspection by applicable code authorities.

C. Inspection of through-penetration firestopping shall be performed in accordance with ASTM E 2174, "Standard Practice for On-Site Inspection of Installed Fire Stops" or other recognized standard.

D. Perform under this section patching and repairing of firestopping caused by cutting or penetrating of existing firestop systems already installed by other trades.

3.5 ADJUSTING AND CLEANING

A. Remove equipment, materials and debris, leaving area in undamaged, clean condition.

B. Clean all surfaces adjacent to sealed holes and joints to be free of excess firestop materials and soiling as work progresses.

END OF SECTION

07 90 00 - JOINT PROTECTION

PART 1 - GENERAL

1.1 RELATED DOCUMENTS

A. Drawings and general provisions of contract including General and Supplementary Conditions and Division 1 specification sections apply to Work of this section.

1.2 SECTION INCLUDES

A. Sealants and joint backing.

1.3 SUBMITTALS

A. Product Data: Provide data indicating sealant chemical characteristics, performance criteria, substrate preparation, limitations, color availability.

1.4 ENVIRONMENTAL REQUIREMENTS

A. Maintain temperature and humidity recommended by the sealant manufacturer during and after installation.

PART 2 - PRODUCTS

2.1 SEALANTS

A. Type A - General Purpose Exterior Sealant: Polyurethane; ASTM C920, Grade NS, Class 25, Uses M, G, and A; single or multi- component.
   1. Color as selected from complete color line.
   2. Applications: Use for:
      a. Joints between concrete and other materials.
      b. Joints between metal frames and other materials.
      c. Joints between siding and other materials.
      d. Other exterior joints for which no other sealant is indicated.

B. Type B - Exterior Metal Lap Joint Sealant: Butyl or polyisobutylene, nondrying, non-skinning, non-curing.
   1. Applications: Use for:
      a. Concealed sealant bead in sheet metal work.
      b. Bedding for door thresholds.

C. Type C - General Purpose Interior Sealant: Acrylic emulsion latex; ASTM C834, single component, paintable.
   1. Colors as selected.
   2. Applications: Use for:
      a. Interior wall and ceiling control joints.

b. Joints between door and window frames and wall surfaces.
c. Other interior joints for which no other type of sealant is indicated.

D. Seismic Silicone Foam Sealant: Preformed, silicone pre-coated, pre-compressed, self-expanding sealant system. Emseal, Seismic Colorseal
1. Color as selected for manufacturer's complete color line
2. Applications:
a. Exterior seismic joints between new freezer structure and existing exterior brick veneer wall.
3. Reference Specification Section 07 95 00 Vertical Expansion Joint system

2.2 ACCESSORIES

A. Primer: Non-staining type, recommended by sealant manufacturer to suit application.

B. Joint Cleaner: Non-corrosive and non-staining type, recommended by sealant manufacturer; compatible with joint forming materials.

C. Joint Backing: Round foam rod compatible with sealant D1667, closed cell PVC oversized 30 to 50 percent larger than joint width.

D. Bond Breaker: Pressure sensitive tape recommended by sealant manufacturer to suit application.

PART 3 - EXECUTION

3.1 EXAMINATION AND PREPARATION

A. Verify that substrate surfaces and joint openings are ready to receive work.

B. Verify that joint backing and release tapes are compatible with sealant.

C. Remove loose materials and foreign matter which might impair adhesion of sealant.

D. Clean and prime joints in accordance with manufacturer's instructions.

E. Perform preparation in accordance with manufacturer's instructions and ASTM C1193.

3.2 INSTALLATION

A. Perform work in accordance with sealant manufacturer's requirements for preparation of surfaces and material installation instructions.

B. Perform installation in accordance with ASTM C1193.

C. Perform acoustical sealant application work in accordance with ASTM C919.

D. Measure joint dimensions and size joint backers to achieve width-to-depth ratio, neck dimension, and surface bond area as recommended by manufacturer, except where specific dimensions are indicated.

E. Install bond breaker where joint backing is not used.

F. Install sealant free of air pockets, foreign embedded matter, ridges, and sags.

G. Apply sealant within recommended application temperature ranges. Consult manufacturer when sealant cannot be applied within these temperature ranges.

H. Tool joints concave.

END OF SECTION

SECTION 07 92 00 - JOINT SEALANTS

PART 1 - GENERAL

1.1 RELATED DOCUMENTS

A. Drawings and general provisions of the Contract, including General and Supplementary Conditions and Division 01 Specification Sections, apply to this Section.

1.2 SUMMARY

A. Section Includes:

1. Nonstaining silicone joint sealants.
2. Urethane joint sealants.
3. Mildew-resistant joint sealants.
4. Polysulfide joint sealants.
5. Butyl joint sealants.
6. Latex joint sealants.

1.3 PREINSTALLATION MEETINGS

A. Preinstallation Conference: Conduct conference at Project site.

1.4 ACTION SUBMITTALS

A. Product Data: For each joint-sealant product.

B. Samples for Initial Selection: Manufacturer's color charts consisting of strips of cured sealants showing the full range of colors available for each product exposed to view.

C. Joint-Sealant Schedule: Include the following information:

1. Joint-sealant application, joint location, and designation.
2. Joint-sealant manufacturer and product name.
3. Joint-sealant formulation.
4. Joint-sealant color.

1.5 INFORMATIONAL SUBMITTALS

A. Qualification Data: For qualified testing agency.

B. Product Test Reports: For each kind of joint sealant, for tests performed by a qualified testing agency.

C. Sample Warranties: For special warranties.

1.6 QUALITY ASSURANCE

A. Installer Qualifications: An authorized representative who is trained and approved by manufacturer.

1.7 PRECONSTRUCTION TESTING

A. Preconstruction Field-Adhesion Testing: Before installing sealants, field test their adhesion to Project joint substrates as follows:

1. Conduct field tests for each kind of sealant and joint substrate.
2. Report whether sealant failed to adhere to joint substrates or tore cohesively. Include data on pull distance used to test each kind of product and joint substrate. For sealants that fail adhesively, retest until satisfactory adhesion is obtained.
3. Evaluation of Preconstruction Field-Adhesion-Test Results: Sealants not evidencing adhesive failure from testing, in absence of other indications of noncompliance with requirements, will be considered satisfactory. Do not use sealants that fail to adhere to joint substrates during testing.

1.8 FIELD CONDITIONS

A. Do not proceed with installation of joint sealants under the following conditions:

1. When ambient and substrate temperature conditions are outside limits permitted by joint-sealant manufacturer or are below 40 deg F.
2. When joint substrates are wet.
3. Where joint widths are less than those allowed by joint-sealant manufacturer for applications indicated.
4. Where contaminants capable of interfering with adhesion have not yet been removed from joint substrates.

1.9 WARRANTY

A. Special Installer's Warranty: Installer agrees to repair or replace joint sealants that do not comply with performance and other requirements specified in this Section within specified warranty period.

1. Warranty Period: Two years from date of Substantial Completion.

B. Special Manufacturer's Warranty: Manufacturer agrees to furnish joint sealants to repair or replace those joint sealants that do not comply with performance and other requirements specified in this Section within specified warranty period.

1. Warranty Period: Five years from date of Substantial Completion.

PART 2 - PRODUCTS

2.1 JOINT SEALANTS, GENERAL

A. Compatibility: Provide joint sealants, backings, and other related materials that are compatible with one another and with joint substrates under conditions of service and application, as demonstrated by joint-sealant manufacturer, based on testing and field experience.

B. VOC Content of Interior Sealants: Sealants and sealant primers used inside the weatherproofing system shall comply with the following:

1. Architectural sealants shall have a VOC content of 250 g/L or less.
2. Sealants and sealant primers for nonporous substrates shall have a VOC content of 250 g/L or less.

C. Colors of Exposed Joint Sealants: As selected by Architect from manufacturer's full range.

2.2 NONSTAINING SILICONE JOINT SEALANTS

A. Nonstaining Joint Sealants: No staining of substrates when tested according to ASTM C 1248.

B. Silicone, Nonstaining, S, NS, 100/50, NT: Nonstaining, single-component, nonsag, plus 100 percent and minus 50 percent movement capability, nontraffic-use, neutral-curing silicone joint sealant; ASTM C 920, Type S, Grade NS, Class 100/50, Use NT.

C. Silicone, Nonstaining, S, NS, 100/50, T, NT: Nonstaining, single-component, nonsag, plus 100 percent and minus 50 percent movement capability, traffic- and nontraffic-use, neutral-curing silicone joint sealant; ASTM C 920, Type S, Grade NS, Class 100/50, Uses T and NT.

2.3 URETHANE JOINT SEALANTS

A. Urethane, S, NS, 100/50, T, NT: Single-component, nonsag, plus 100 percent and minus 50 percent movement capability, traffic- and nontraffic-use, urethane joint sealant; ASTM C 920, Type S, Grade NS, Class 100/50, Uses T and NT.

2.4 MILDEW-RESISTANT JOINT SEALANTS

A. Mildew-Resistant Joint Sealants: Formulated for prolonged exposure to humidity with fungicide to prevent mold and mildew growth.

B. Silicone, Mildew Resistant, Acid Curing, S, NS, 25, NT: Mildew-resistant, single-component, nonsag, plus 25 percent and minus 25 percent movement capability, nontraffic-use, acid-curing silicone joint sealant; ASTM C 920, Type S, Grade NS, Class 25, Use NT.

2.5 BUTYL JOINT SEALANTS

A. Butyl-Rubber-Based Joint Sealants: ASTM C 1311.

2.6 LATEX JOINT SEALANTS

A. Acrylic Latex: Acrylic latex or siliconized acrylic latex, ASTM C 834, Type OP, Grade NF.

2.7 JOINT-SEALANT BACKING

A. Sealant Backing Material, General: Nonstaining; compatible with joint substrates, sealants, primers, and other joint fillers; and approved for applications indicated by sealant manufacturer based on field experience and laboratory testing.

B. Cylindrical Sealant Backings: ASTM C 1330, Type C (closed-cell material with a surface skin), and of size and density to control sealant depth and otherwise contribute to producing optimum sealant performance.

C. Bond-Breaker Tape: Polyethylene tape or other plastic tape recommended by sealant manufacturer for preventing sealant from adhering to rigid, inflexible joint-filler materials or joint surfaces at back of joint. Provide self-adhesive tape where applicable.

2.8 MISCELLANEOUS MATERIALS

A. Primer: Material recommended by joint-sealant manufacturer where required for adhesion of sealant to joint substrates indicated, as determined from preconstruction joint-sealant-substrate tests and field tests.

B. Cleaners for Nonporous Surfaces: Chemical cleaners acceptable to manufacturers of sealants and sealant backing materials, free of oily residues or other substances capable of staining or harming joint substrates and adjacent nonporous surfaces in any way, and formulated to promote optimum adhesion of sealants to joint substrates.

C. Masking Tape: Nonstaining, nonabsorbent material compatible with joint sealants and surfaces adjacent to joints.

PART 3 - EXECUTION

3.1 EXAMINATION

A. Examine joints indicated to receive joint sealants, with Installer present, for compliance with requirements for joint configuration, installation tolerances, and other conditions affecting performance of the Work.

B. Proceed with installation only after unsatisfactory conditions have been corrected.

3.2 PREPARATION

A. Surface Cleaning of Joints: Clean out joints immediately before installing joint sealants to comply with joint-sealant manufacturer's written instructions and the following requirements:

1. Remove all foreign material from joint substrates that could interfere with adhesion of joint sealant, including dust, paints (except for permanent, protective coatings tested and approved for sealant adhesion and compatibility by sealant manufacturer), old joint sealants, oil, grease, waterproofing, water repellents, water, surface dirt, and frost.
2. Clean porous joint substrate surfaces by brushing, grinding, mechanical abrading, or a combination of these methods to produce a clean, sound substrate capable of developing optimum bond with joint sealants. Remove loose particles remaining after cleaning operations above by vacuuming or blowing out joints with oil-free compressed air. Porous joint substrates include the following:

    a. Concrete.

3. Remove laitance and form-release agents from concrete.
4. Clean nonporous joint substrate surfaces with chemical cleaners or other means that do not stain, harm substrates, or leave residues capable of interfering with adhesion of joint sealants. Nonporous joint substrates include the following:

    a. Metal.
    b. Glass.
    c. Porcelain enamel.

B. Joint Priming: Prime joint substrates where recommended by joint-sealant manufacturer or as indicated by preconstruction joint-sealant-substrate tests or prior experience. Apply primer to comply with joint-sealant manufacturer's written instructions. Confine primers to areas of joint-sealant bond; do not allow spillage or migration onto adjoining surfaces.

C. Masking Tape: Use masking tape where required to prevent contact of sealant or primer with adjoining surfaces that otherwise would be permanently stained or damaged by such contact or by cleaning methods required to remove sealant smears. Remove tape immediately after tooling without disturbing joint seal.

3.3 INSTALLATION OF JOINT SEALANTS

A. General: Comply with joint-sealant manufacturer's written installation instructions for products and applications indicated, unless more stringent requirements apply.

B. Sealant Installation Standard: Comply with recommendations in ASTM C 1193 for use of joint sealants as applicable to materials, applications, and conditions indicated.

C. Install sealant backings of kind indicated to support sealants during application and at position required to produce cross-sectional shapes and depths of installed sealants relative to joint widths that allow optimum sealant movement capability.

1. Do not leave gaps between ends of sealant backings.
2. Do not stretch, twist, puncture, or tear sealant backings.
3. Remove absorbent sealant backings that have become wet before sealant application, and replace them with dry materials.

D. Install bond-breaker tape behind sealants where sealant backings are not used between sealants and backs of joints.

E. Install sealants using proven techniques that comply with the following and at the same time backings are installed:

1. Place sealants so they directly contact and fully wet joint substrates.
2. Completely fill recesses in each joint configuration.
3. Produce uniform, cross-sectional shapes and depths relative to joint widths that allow optimum sealant movement capability.

F. Tooling of Nonsag Sealants: Immediately after sealant application and before skinning or curing begins, tool sealants according to requirements specified in subparagraphs below to form smooth, uniform beads of configuration indicated; to eliminate air pockets; and to ensure contact and adhesion of sealant with sides of joint.

1. Remove excess sealant from surfaces adjacent to joints.
2. Use tooling agents that are approved in writing by sealant manufacturer and that do not discolor sealants or adjacent surfaces.
3. Provide concave joint profile per Figure 8A in ASTM C 1193 unless otherwise indicated.

3.4 CLEANING

A. Clean off excess sealant or sealant smears adjacent to joints as the Work progresses by methods and with cleaning materials approved in writing by manufacturers of joint sealants and of products in which joints occur.

3.5 PROTECTION

A. Protect joint sealants during and after curing period from contact with contaminating substances and from damage resulting from construction operations or other causes so sealants are without deterioration or damage at time of Substantial Completion. If, despite such protection, damage or deterioration occurs, cut out, remove, and repair damaged or deteriorated joint sealants immediately so installations with repaired areas are indistinguishable from original work.

3.6 JOINT-SEALANT SCHEDULE

A. Joint-Sealant Application: Exterior joints in vertical surfaces and horizontal nontraffic surfaces.

1. Joint Locations:

   a. Construction joints in cast-in-place concrete.
   b. Joints between different materials.
   c. Perimeter joints between materials listed above and frames of doors, windows and louvers.
   d. Control and expansion joints.
   e. Other joints as indicated on Drawings.

2. Joint Sealant: Urethane, nonstaining, S, NS, 50, NT.
3. Joint-Sealant Color: As selected by Architect from manufacturer's full range of colors.

B. Joint-Sealant Application: Interior joints in horizontal traffic surfaces.

1. Joint Locations:

   a. Isolation joints in cast-in-place concrete slabs.
   b. Other joints as indicated on Drawings.

2. Joint Sealant: Urethane, S, P, 25, T, NT.
3. Joint-Sealant Color: As selected by Architect from manufacturer's full range of colors.

C. Joint-Sealant Application: Interior joints in vertical surfaces and horizontal nontraffic surfaces.

1. Joint Locations:

   a. Vertical joints on exposed surfaces of concrete, walls, and partitions.
   b. Other joints as indicated on Drawings.

2. Joint Sealant: Urethane, S, NS, 50, NT.
3. Joint-Sealant Color: As selected by Architect from manufacturer's full range of colors.

D. Joint-Sealant Application: Interior joints in vertical surfaces and horizontal nontraffic surfaces not subject to significant movement.

1. Joint Locations:

   a. Perimeter joints between interior wall surfaces and frames of interior doors and windows.
   b. Other joints as indicated on Drawings.

2. Joint Sealant: Acrylic latex.
3. Joint-Sealant Color: As selected by Architect from manufacturer's full range of colors.

E. Joint-Sealant Application: Mildew-resistant interior joints in vertical surfaces and horizontal nontraffic surfaces.

1. Joint Locations:

a. Joints between plumbing fixtures and adjoining walls, floors, and counters.
b. Other joints as indicated on Drawings.

2. Joint Sealant: Silicone, mildew resistant, acid curing, S, NS, 25, NT.
3. Joint-Sealant Color: As selected by Architect from manufacturer's full range of colors.

F. Joint-Sealant Application: Concealed mastics.

1. Joint Locations:

a. Aluminum thresholds.
b. Other joints as indicated on Drawings.

2. Joint Sealant: Butyl-rubber based.
3. Joint-Sealant Color: As selected by Architect from manufacturer's full range of colors.

END OF SECTION

08 11 00 - METAL DOORS AND FRAMES

PART 1 – GENERAL

1.1 DESCRIPTION

A. Work included: Provide metal doors, and metal door and window frames, which are not specifically described in other Sections of these Specifications, where shown on the Drawings, as specified herein, and as needed for a complete and proper installation.

B. Related work:
1. Documents affecting work of this Section include, but are not necessarily limited to, General Conditions, Supplementary Conditions, and Sections in Division 1 of these Specifications. Comply with the requirements of Division 01 General Requirements Specifications for measurement and payment; coordination, sequencing, and scheduling; submittals; quality assurance; qualifications; delivery, storage and handling; existing conditions; source quality control field quality control; startup and commissioning; and closeout activities.
2. Hardware - see Section 08 71 00
3. Glazing – see Sections 08 80 00
4. Painting - see Section 09 90 00

1.2 RELATED DOCUMENTS

A. Drawings and general provisions of contract including General and Supplementary Conditions and Division 1 specification sections apply to Work of this section.

1.3 PRICING AND PAYMENT PROCEDURES

A. Measurement and payment requirements: per Division 01 General Requirements

1.4 ADMINISTRATIVE REQUIREMENTS

A. Coordination, Sequencing and Scheduling: per Division 01 General Requirements

1.5 QUALITY ASSURANCE

A. Use adequate numbers of skilled workmen who are thoroughly trained and experienced in the necessary crafts and who are completely familiar with the specified requirements and the methods needed for proper performance of the work of this Section.

B. Unless specifically otherwise approved by the Architect, provide all products of this Section from a single manufacturer.

C. Perform Work in accordance with the following:
1. ANSI 250.8 – Recommended Specifications for Standard Steel Doors and Frames.
2. DHI – Door Hardware Institute – The Installation of Commercial Steel Doors and Steel Frames, Insulated Steel Doors in Wood Frames and Builders Hardware.

3. Fire Rated Doors and Frames:
   a. Product Construction: NFPA 252.
   b. Product Installation: NFPA 80.

1.6 SUBMITTALS

A. In accordance with Division 01 General Requirements.

B. Product Data: Within 30 calendar days after the Contractor has received the Owner's Notice to Proceed, submit:
   1. Materials list of items proposed to be provided under this Section.
   2. Manufacturer's specifications and other data needed to prove compliance with the specified requirements.
   3. Shop Drawings showing details of each frame type, elevations of door designs, details of openings, and details of construction, installation and anchorage.
   4. Manufacturer's recommended installation procedures which, when approved by the Architect, will become the basis for accepting or rejecting actual installation procedures used on the Work.

PART 2 – PRODUCTS

2.1 GENERAL

A. Provide hollow metal doors and frames manufactured by a single firm specializing in the production of this type of work.

B. Provide doors and frames complying with the Steel Door Institute "Recommended Specifications for Standard Steel Doors and Frames": (SDI 100), and as herein specified.

C. Manufacturers offering products to comply with the requirements for hollow metal doors and frames include the following:
   1. Curries Company, Models 707, 747
   2. Ceco Corporation
   3. Amweld, American Welding and Manufacturing Co.
   4. Steelcraft
   5. Stainless Doors Inc.
   6. Approved equals

2.2 FIRE RATED ASSEMBLIES

A. Wherever a fire-resistance classification (3 hour, 1-1/2 hour, etc., or "A", "B", etc.) is shown or scheduled for hollow metal doors, provide fire rated hollow metal doors and frames that have been investigated and tested as a fire door assembly, complete with type of fire door hardware to be used in the work. Identify each fire door and frame with UL labels, indicating the applicable fire rating of both door and frame.

B. Fabricate and install assemblies to comply with NFPA Standard No. 80, and as herein specified.

2.3 MATERIALS

A. Hot Rolled Steel Sheets and Strips
   1. Commercial quality carbon steel, pickled and oiled, complying with ASTM A 569 and ASTM A 568.

B. Cold Rolled Steel Sheets:
   1. Commercial quality carbon steel type E, matte-finish complying with ASTM A 366 and ASTM A 568.

C. Hot-dip Galvanized Steel Sheets
   1. Zinc-coated carbon steel sheets of commercial quality complying with ASTM A 526, A with 1.25 oz "Commercial" zinc coating, mill-phospatized, complying with ASTM 525, G60.

D. Supports and Anchors
   1. Provide units galvanized after fabrication, where built into exterior walls, complying with ASTM A 153, Class B.

E. Inserts, Bolts, and Fasteners
   1. Provide manufacturer's standard units, except hot-dip galvanize all items to be built into exterior walls, complying with ASTM A 153.

F. Shop-Applied Paint
   1. Provide manufacturer's standard shop-applied baked-on prime-coat paint to all metal surfaces.
   2. Primer for galvanized surfaces: Provide a zinc-duct/ zinc-oxide prime paint, complying with FS-TT P 641 (Type II).

2.4 METAL DOORS

A. Provide hollow metal doors of the types and styles indicated on the Drawings or Schedules and complying with SDI 100-98 for minimum materials and construction requirements.

B. Exterior and Interior Doors: Level 3, Extra Heavy Duty, Model 1, Full Flush, 1-3/4” thick, insulated. Minimum 16 gauge steel at doors 102A, 105, 110C, and 112A (galvanized at all exterior doors).

C. End Closure: Channel, 0.04 inch thick, flush.

D. Thermal Insulated Doors (Exterior): Total insulation R-Value of 6.4, measured in accordance with ASTM C518.

E. Sound Rated doors at doors 102B, 105, 110C and 112A. Minimum STC Rating of 66.

F. Door closure installation reinforced to 12 Gauge steel for doors 102A, 105, 110C and 112A.

G. Lock area predrilled and reinforced to 10-gauge at doors 102A, 105, 110C and 112A.

2.5 METAL FRAMES

A. Provide metal frames for doors and other openings as shown on the Drawings and Schedules. Conceal all fastenings unless otherwise shown. Countersink exposed screws using Phillips flat head screws.

B. Door Frames: Level 3, nominal 16 gauge sheet steel (14 gauge galvanized steel at exterior door frames). Frames shall be combination type with integral stop. Reinforce each miter joint internally with 18 gauge channel shaped reinforcements. Equip frames with one welded-in floor anchor in each jamb. Provide three field inserted steel lock-in anchors (maximum of 24" oc.) at each jamb. Anchor to construction involved (i.e. wood frame, masonry, concrete or steel stud). Fabricate all frames to fit surrounding wall construction snugly; no plastic, vinyl, or other fillers will be accepted.

1. Frames for Masonry Openings: Provide self-aligning tabs and slots for secure locking and miter and continuously arc-weld on the frame face (spot weld at corners) to form a one-piece neat mitered corner assembly.

2. Frames for Drywall Openings: Frames for doors 102A, 102B, 105,110C and 112A shall be fully welded frames. Frames for all other doors may be suitable for installation after the wall is erected. Supply head frame with an oval countersunk head sheet metal screw, located out of view, for securing the header and jambs. Provide headers and jambs with mating tabs and slots for alignment of the assembly. Provide neat mitered joints at all corners. Provide two welded-in steel stiffeners at each jamb member to maintain a tight grip on the wall and equip with welded-in sill anchors.

C. Rubber Door Silencers: Drill stops to receive 3 silencers on strike jambs of single-swing frames and 4 silencers on heads of double-swing frames. Install plastic plugs to keep holes clear during construction.

D. Plaster Guards: Provide 22 gauge steel plaster guards or mortar boxes welded to the frame, at the back of all finish hardware cutouts where mortar or other materials might obstruct hardware operation.

PART 3 – EXECUTION

3.1 GENERAL

A. Fabricate hollow metal units to be rigid, neat in appearance and free from defects, accurately formed to the required sizes and profiles. Wherever practicable, fit and assemble units in the manufacturer's plant. Clearly identify work that cannot be permanently factory-assembled before shipment to assure proper assembly at the project site. Dress all welded joints on exposed surfaces flush and smooth, to be invisible when prime painted. Use of metallic filler to conceal manufacturing defects is not acceptable.

3.2 FINISH HARDWARE PREPARATION

A. Prepare hollow metal units at the manufacturer's plant to receive mortised and concealed finish hardware, including cutouts, reinforcing, drilling, and tapping. Comply with applicable requirements of ANSI A-15 "Specifications for Door and Frame Preparation". Prepare for other mortised and concealed finish hardware to the templates of the manufacturer

of each finish hardware item required in the work.

B. Reinforce hollow metal units at the manufacturer's plant to receive surface-applied hardware. Drill and tap for surface applied finish hardware at the project site during installation.

3.3 MOLDING LOCATIONS

A. Provide moldings around solid, glazed or louvered panels in hollow metal units for a rigid and secure installation.

B. Provide non-removable molding on the outside of exterior hollow metal units and the corridor side of interior hollow metal units.

C. Provide removable moldings at other locations, unless otherwise shown.

3.4 PLACING FRAMES

A. Place frames prior to the construction of masonry enclosing walls and ceilings. Set frames accurately in position, plumbed, aligned, and braced securely until permanent anchors are set. After wall construction is completed, remove temporary braces and spreaders leaving surfaces smooth and undamaged.

B. Install fire-rated frames in accordance with NFPA Standard No. 80.

C. In drywall metal stud partitions, follow manufacturer's recommendations for installation of frames.

3.5 DOOR HARDWARE INSTALLATION

A. Door hardware installation is specified under Section 08 71 00.

3.6 CLEARANCES

A. Fire rated doors shall be manufactured and installed with clearances as specified by NFPA Standard No. 80.

B. All doors shall be manufactured and installed with clearances specified by SDI 100.

3.7 ADJUST AND CLEAN

A. Final Adjustments:
1. Check and readjust operating finish hardware items in hollow metal work just prior to final inspection.
2. Leave work in compete and proper operating condition.
3. Remove defective work and replace with work complying with the specified requirements.

B. Immediately after erection, sand smooth all rusted and damaged areas of prime coat, and apply touchup of compatible air-drying primer.

END OF SECTION

PAGE LEFT BLANK INTENTIONALLY

08 33 00 - INSULATED ROLLING SERVICE DOORS

PART 1 GENERAL

1.1 SUMMARY

A. Section Includes: Manual and electric operated overhead insulated rolling doors.

B. Related Sections:
1. 05 50 00 Metal Fabrications. Door opening jamb and head members.
2. 06 10 00 Rough Carpentry. Door opening jamb and head members.
3. 08 31 00 Access Doors and Panels. Access doors.
4. 08 70 00 Hardware. Padlocks. Masterkeyed cylinder.
5. Division 26. Electrical wiring and conduit, fuses, disconnect switches, connection of operator to power supply, and installation of control station and wiring.

1.2 SYSTEM DESCRIPTION

A. Design Requirements:
1. Air Infiltration to Comply With:
   a. ASHRAE® (American Society of Heating, Refrigeration, and Air-Conditioning Engineers) Standard 90.1-2007, 2010 & 2013 requirements of less than .3 CFM/FT2
   b. IECC® (International Energy Conservation Code) 2012 requirements of less than 1.0 CFM/FT2

2. Wind Loading:
   a. Supply doors to withstand design wind loads as required by the 20188 International Building Code.

3. Cycle Life:
   a. Design doors of standard construction for normal use of up to 20 cycles per day maximum, and an overall maximum of 50,000 operating cycles for the life of the door

4. Seismic Performance:
   a. Provide manufacturer’s seismic calculations confirming ASCE7-10

5. Insulated Door Slat Material Requirements:
   a. Flame Spread Index of 0 and a Smoke Developed Index of 10 as tested per ASTM E84
   b. Sound Transmission Class (STC) rating of 27 for the entire assembly as evaluated per ASTM E90 and based on testing a complete, operable assembly.
   c. Minimum R-value of 8.0 (U-value of 0.125) as calculated using the ASHRAE Handbook of Fundamentals
   d. Insulation to be CFC Free with an Ozone Depletion Potential (ODP) rating of zero

6. Safety:
   a. Chain operated doors shall be designed so that the door immediately stops upward or downward travel and is maintained in a stationary position when the hand chain is released by user.

7. Custom Layout:
   a. Product has been reconfigured for a custom layout, refer to drawings by CornellCookson.

8. Customized Product:
   a. This product has custom modifications designed by CornellCookson. Contact Manufacturer for details.

1.3 SUBMITTALS

A. Reference Section 01 33 00 Submittal Procedures; submit the following items:
   1. Product Data

   2. Shop Drawings: Include special conditions not detailed in Product Data. Show interface with adjacent work.

   3. Quality Assurance/Control Submittals:
      a. Provide manufacturer ISO 9001:2015 registration
      b. Provide manufacturer and installer qualifications - see below
      c. Provide manufacturer's installation instruction
      d. Manufacturer must provide independent testing lab results proving .3 CFM/FT2 or less air infiltration

   4. Closeout Submittals:
      a. Operation and Maintenance Manual
      b. Certificate stating that installed materials comply with this specification

1.4 QUALITY ASSURANCE

A. Qualifications:
   1. Manufacturer Qualifications: ISO 9001:2015 registered and a minimum of five years experience in producing doors of the type specified

   2. Installer Qualifications: Manufacturer's approval

1.5 DELIVERY STORAGE AND HANDLING

A. Reference Section 01 66 00 Product Storage and Handling Requirements

B. Follow manufacturer's instructions

1.6 WARRANTY

A. Standard Warranty: Two years from date of shipment against defects in material and workmanship

B. Maintenance: Submit for owner's consideration and acceptance of a maintenance service agreement for installed products

PART 2 PRODUCT

2.1 MANUFACTURER

A. Manufacturer:
1. Cornell: 24 Elmwood Avenue, Mountain Top, PA 18707.
Telephone: (800) 233-8366
2. Cookson
3. Clopay Building Products

Substitutions: Equal products may be considered is approved prior to bid.

2.2 PRODUCT INFORMATON

A. Model: ESD30

2.3 MATERIALS

A. Curtain: Air infiltration rate of less than .3 CFM/FT2, as tested per ASTM E283 validated by an independent testing agency. Test report required.
1. Fabrication:
a. Slat Material: No. 6F, (Listed Exterior/Interior):
1) Galvanized Steel/Galvanized Steel: Manufacturer recommended gauge based on performance requirements. Minimum 22 exterior/24 interior gauge, Grade 40, ASTM A 653 galvanized steel zinc coating
b. Insulation: 7/8 inch (22 mm) foamed-in-place, closed cell urethane
c. Total Slat Thickness: 15/16 inch (24 mm)
d. Flame Spread Index of 0 and a Smoke Developed Index of 10 as tested per ASTM E84
e. R-value: 8.0
f. STC Rating: Sound Transmission Class (STC) rating of 27 as evaluated per ASTM E90 and based on testing a complete, operable assembly

2. Exterior Slat Finish:

a. SpectraShield® Coating System (Color Selected by Architect):
1) ASTM A 653 galvanized base coating treated with dual process rinsing agents in preparation for chemical bonding, gray baked-on base coat and gray baked-on polyester finish coat
2) Zirconium treatment followed by baked-on polyester powder coat, with [color as selected by Architect from manufacturer's standard color range, over 180 colors minimum 2.5 mils (0.065

mm) cured film thickness; ASTM D-3363 pencil hardness: H or better

3. Interior Slat Finish:
   a. SpectraShield® Coating System (Color Selected by Architect):
      1) ASTM A 653 galvanized base coating treated with dual process rinsing agents in preparation for chemical bonding, gray baked-on base coat and gray baked-on polyester finish coat
      2) Zirconium treatment followed by baked-on polyester powder coat, with [color as selected by Architect from manufacturer's standard color range, over 180 colors] [custom color as selected by Architect]; minimum 2.5 mils (0.065 mm) cured film thickness; ASTM D-3363 pencil hardness: H or better

B. Endlocks: Fabricate interlocking sections with high strength galvanized cast iron endlocks on alternate slats each secured with two ¼” (6.35 mm) rivets. Provide windlocks as required to meet specified wind load.
   1. Galvanized cast iron: Required if above 21’-5” width (DBG - Distance Between Guides)

C. Bottom Bar
   1. Configuration:
      a. Insulated Bottom Bar: Reinforced extruded aluminum interior face with full depth insulation and exterior skin slat to match curtain material and gauge. Minimum 4” tall x 1-1/16” thickness.
   2. Finish:
      a. Exterior: Match slats
      a. Interior: Powder coat to match slats

   3. Air Infiltration Certification Label: Must be affixed to bottom bar

D. Guides:
   1. Fabrication:
      a. Thermal break required. Minimum 3/16 inch (4.76 mm) structural steel angles. Provide windlock bars of same material when windlocks are required to meet specified wind load. Top of inner and outer guide angles to be flared outwards to form bellmouth for smooth entry of curtain into guides. Provide removable guide stoppers to prevent over travel of curtain and bottom bar.

      b. Top 16 ½” (419.10 mm) of coil side guide angles to be removable for ease of curtain installation and as needed for future curtain service

   2. Finish:
      a. SpectraShield® Coating System (Color Selected by Architect): Zirconium treatment followed by baked-on polyester powder coat, color as selected by Architect from manufacturer's standard color range, over 180 colors ; minimum 2.5 mils (0.065 mm) cured film thickness; ASTM D-3363 pencil hardness: H or better.

E. Counterbalance Shaft Assembly:
1. Barrel: Steel pipe capable of supporting curtain load with maximum deflection of 0.03 inches per foot (2.5 mm per meter) of width
2. Spring Balance: Oil-tempered, heat-treated steel helical torsion spring assembly designed for proper balance of door to ensure that maximum effort to operate will not exceed 25 lbs (110 N). Provide wheel for applying and adjusting spring torque.

F. Brackets:
Fabricate from minimum 3/16 inch (5 mm) steel plate with permanently lubricated ball or roller bearings at rotating support points to support counterbalance shaft assembly and form end closures
1. Finish:
a. SpectraShield® Coating System (Color Selected by Architect): Zirconium treatment followed by baked-on polyester powder coat, color as selected by Architect from manufacturer's standard color range, over 180 colors; minimum 2.5 mils (0.065 mm) cured film thickness; ASTM D-3363 pencil hardness: H or better

G. Hood:
Minimum 24 gauge galvanized steel with reinforced top and bottom edges. Provide minimum 1/4 inch (6.35 mm) steel intermediate support brackets as required to prevent excessive sag.
1. Finish:
a. SpectraShield® Coating System (Color Selected by Architect):
1) ASTM A 653 galvanized base coating treated with dual process rinsing agents in preparation for chemical bonding, gray baked-on base coat and gray baked-on polyester finish coat
2) Zirconium treatment followed by baked-on polyester powder coat, with color as selected by Architect from manufacturer's standard color range, over 180 colors; minimum 2.5 mils (0.065 mm) cured film thickness; ASTM D-3363 pencil hardness: H or better

H. Weatherstripping:

1. Bottom Bar:
a. Motor Operated Doors: Sensing/weather edge with neoprene astragal extending full width of door bottom bar
2. Guides: Replaceable vinyl strip on guides sealing against both sides of curtain
3. Lintel Seal: Double brush seal with EPDM sandwiched between the two brush seals at door header to impede air flow.
4. Hood: Neoprene/rayon baffle to impede air flow above coil

2.4 OPERATION

A. Motor – Standard Use – Model MG (Industrial Duty Gear Head) Operator: The operator must not extend above or below the door coil when mounted front-of-coil. Rated for a maximum of 20 cycles per hour (not to be used for consecutive hours) cULus listed (to comply with UL requirements in The United States and Canada), Totally Enclosed Non

Ventilated gear head operator(s) rated 3/4 hp as recommended by door manufacture for size and type of door, 120 Volts, single Phase. Provide complete with electric motor and factory pre-wired motor control terminals, maintenance free solenoid actuated brake, emergency manual chain hoist and control station(s). Motor shall be high starting torque, industrial type, protected against overload with an auto-reset thermal sensing device. Primary speed reduction shall be heavy-duty, lubricated gears with mechanical braking to hold the door in any position. Operator shall be equipped with an emergency manual chain hoist assembly that safely cuts operator power when engaged. A disconnect chain shall not be required to engage or release the manual chain hoist. Operator drive and door driven sprockets shall be provided with #50 roller chain. Provide an integral Motor Mounted Interlock system to prevent damage to door and operator when mechanical door locking devices are provided. Operator drive and door driven sprockets shall be provided with minimum #50 roller chain. Operator shall be capable of driving the door at a speed of up to 9” per second or as recommended for door size. Fully adjustable, driven linear screw type cam limit switch mechanism shall synchronize the operator with the door. The electrical contractor shall mount the control station(s) and supply the appropriate disconnect switch, all conduit and wiring per the overhead door wiring instructions. Provide additional motor contacts as required such as to allow the overhead doors operation to be dependent upon an interior fencing gate to be closed in order to open the door. If the interior gate is open, then the overhead door should not be able to open.

B. Control Station:
   1. Surface mounted: "Open/Close/Stop" push buttons; NEMA 1

C. Control Operation:
   1. Momentary Contact to Close:
      Fail-safe, UL325-2010 Compliant Entrapment Protection for Motor Operation
      a. NEMA 1 photo eye sensors consisting of a transmitter and receiver that are to be mounted within 6” (152.4 mm) of the floor, projecting an IR beam across the entire width of the door. Electrical contractor to provide low voltage wiring from the transmitter and receiver to the door operator.

   2. Sensing/Weather Edge: Automatic reversing control by an automatic sensing switch within neoprene or rubber astragal extending full width of door bottom bar
      a. Electric sensing edge device. Provide a wireless sensing edge connection to motor operator eliminating the need for a physical traveling electric cord connection between bottom bar sensing edge device and motor operator.

2.5 ACCESSORIES

A. Locking:
   1. Padlockable slide bolt on coil side of bottom bar at each jamb extending into slots in guides. Provide interlock switches on Motor operated units.
   2. Masterkeyable cylinder operable coil sided of bottom bar, options for all types of operation. Provide interlock switches on Motor operated units.
      a. Sargent Cylinder. Keying to be coordinated with buildings master keying system. Refer to Door Schedule and Specification Section 08 71 00 - Finish Hardware for further information.

C. Operator and Bracket Mechanism Cover: Minimum 24 gauge galvanized steel sheet metal cover to provide weather resistance and to enclose exposed moving operating components] at coil area of unit. Finish to match door hood.

E. Strip Door Bracket: Assembly integral to coiling door to hang strip door on interior of building. Contact factory for sizes greater than 12’-0” x 12-0”. Powder coated finish to match coiling door.

PART 3 EXECUTION

3.1 EXAMINATION

A. Examine substrates upon which work will be installed and verify conditions are in accordance with approved shop drawings
B. Coordinate with responsible entity to perform corrective work on unsatisfactory substrates
C. Commencement of work by installer is acceptance of substrate

3.2 INSTALLATION

A. General: Install door and operating equipment with necessary hardware, anchors, inserts, hangers and supports
B. Follow manufacturer's installation instructions

3.3 ADJUSTING

A. Following completion of installation, including related work by others, lubricate, test, and adjust doors for ease of operation, free from warp, twist, or distortion

3.4 CLEANING

A. Clean surfaces soiled by work as recommended by manufacturer.
B. Remove surplus materials and debris from the site

3.5 DEMONSTRATION

A. Demonstrate proper operation to Owner's Representative
B. Instruct Owner's Representative in maintenance procedures

END OF SECTION

PAGE LEFT BLANK INTENTIONALLY

SECTION 08 52 13 – METAL-CLAD WOOD WINDOWS

PART 1 GENERAL

1.1 SUMMARY

A. Section Includes: Wood-framed, aluminum-clad windows of the following types: double-hung.

B. Related Sections: Section(s) related to this section include:

1. 06 10 00 - Rough Carpentry for blocking requirements

1.2 REFERENCES

A. General: Standards listed by reference form a part of this specification section. Standards listed are identified by issuing authority, abbreviation, designation number, title or other designation. Standards subsequently referenced in this Section are referred to by issuing authority abbreviation and standard designation.

B. American Architectural Manufacturers Association (AAMA):

1. AAMA 450 - Voluntary Performance Rating Method for Mulled Fenestration Assemblies.
2. AAMA 502 - Voluntary Specification for Field Testing of Newly Installed Fenestration Products.
3. AAMA 611 - Voluntary Specification for Anodized Architectural Aluminum.
4. AAMA 902 - Voluntary Specification for Sash Balances.
5. AAMA 2604 - Voluntary Specification, Performance Requirements and Test Procedures for High Performance Organic Coatings on Aluminum Extrusions and Panels.
6. AAMA 2605 - Voluntary Specification, Performance Requirements and Test Procedures for Superior Performing Organic Coatings on Aluminum Extrusions and Panels.
7. NAFS - North American Fenestration Standard/Specification for windows, doors and skylights.

C. Andersen E-Series Product Installation Guides.

D. ASTM International (ASTM):

1. ASTM C1036 - Standard Specification for Flat Glass.
2. ASTM C1048 - Standard Specification for Heat-Strengthened and Fully Tempered Flat Glass.
3. ASTM E90 - Standard Test Method for Laboratory Measurement of Airborne Sound Transmission Loss of Building Partitions and Elements.
4. ASTM E1105 - Standard Test Method for Field Determination of Water Penetration of Installed Exterior Windows, Skylights, Doors, and Curtain Walls, by Uniform or Cyclic Static Air Pressure Difference.

5. ASTM E1886 - Standard Test Method for Performance of Exterior Windows, Curtain Walls, Doors, and Impact Protective Systems Impacted by Missile(s) and Exposed to Cyclic Pressure Differentials.
6. ASTM E1996 - Standard Specification for Performance of Exterior Windows, Curtain Walls, Doors, and Impact Protective Systems Impacted by Windborne Debris in Hurricanes.
7. ASTM E2190 - Standard Specification for Insulating Glass Unit Performance and Evaluation.
8. ASTM F2090 - Standard Specification for Window Fall Prevention Devices with Emergency Escape (Egress) Release Mechanisms.

E. Building Code Compliance Office of Miami-Dade, Florida. Florida Building Code Test Protocol for High-Velocity Hurricane Zones:

1. TAS 201 - Impact Test.
2. TAS 202 - Uniform Static Air Pressure Test.
3. TAS 203 - Cyclic Wind Pressure Loading Test.

F. Insulating Glass Certification Council (IGCC): Insulating Glass Unit Certification.

G. Insulating Glass Manufacturers Alliance of Canada (IGMAC) and Canadian General Standards Board (CGSB): Insulating Glass Units Standard CAN/CGSB 12.8-97.

H. International Standards Organization (ISO): ISO 14021 - Environmental Labels and Declarations -- Self-Declared Environmental Claims (Type II Environmental Labeling).

I. National Fenestration Rating Council (NFRC):

1. NFRC 100 - Procedure for Determining Fenestration Product U-Factors.
2. NFRC 200 - Procedure for Determining Fenestration Product Solar Heat Gain Coefficient and Visible Transmittance at Normal Incidence.

J. Texas Department of Insurance: Product Evaluation WIN-1875 for compliance with wind loads specified in the International Residential Code (IRC) and the International Building Code (IBC).

K. U.S. Environmental Protection Agency (EPA): ENERGY STAR.

L. Window and Door Manufacturers Association (WDMA):

1. WDMA Hallmark Certification Program for Manufacturers.
2. WDMA I.S. 4 - Industry Specification for Preservative Treatment for Millwork.

1.3 ADMINISTRATIVE REQUIREMENTS

A. Pre-installation Meetings: Conduct pre-installation meeting to clarify Project requirements, substrate conditions, manufacturer’s installation instructions and manufacturer’s warranty requirements.

1.4 PERFORMANCE REQUIREMENTS

A. Structural Performance Requirements:

1. Comply with requirements of NAFS.

1.5 SUBMITTALS

A. Product Data: For each type of product required.

B. Shop Drawings: Showing methods of installation, plans, sections, elevations and details of walls, specified loads, flashings, vents, sealants, and interfaces with all materials not supplied by the window manufacturer, and identification of proposed component parts and finishes.

C. Samples: Selection and verification samples for finishes, colors and textures. Submit two complete sample sets of each type of material required.

D. Certificates: Signed by manufacturer certifying materials comply with specified performance characteristics, criteria and physical requirements.

E. Test and Evaluation Reports: Showing compliance with specified performance characteristics and physical properties.

F. Manufacturer Instructions: Manufacturer installation, storage, and other instructions.

G. Qualification Statements: For manufacturer and installer.

1.6 QUALITY ASSURANCE

A. Manufacturer Qualifications:

1. Member in good standing of the Insulating Glass Certification Council (IGCC).
2. Hallmark Certified Manufacturer and member in good standing of the Window and Door Manufacturers Association (WDMA).
3. Member in good standing of the U.S. Green Building Council.
4. U.S. EPA ENERGY STAR Partner.
5. Capable of demonstrating an extended history of window and door design, production and innovation.

B. Installer Qualifications:

1. Minimum five years' experience in the commercial installation of products required for the Project.
2. Experience on at least five projects of similar size, type and complexity as the Project.
3. An entity utilizing workers competent in techniques required by manufacturer for product types and applications indicated.

1.7 DELIVERY, STORAGE AND HANDLING

A. Comply with manufacturer’s ordering instructions and lead time requirements to avoid construction delays.

B. Deliver materials to Project in manufacturer’s original unopened, undamaged containers with identification labels intact.

C. Storage and Protection: Store materials and accessories protected from exposure to harmful environmental conditions and at temperature and humidity conditions recommended by manufacturer off ground, under cover and not exposed to weather and construction activities.

1.8 WARRANTY

A. Special Warranty: Manufacturer's transferrable, non-prorated limited warranty.

1. Warranty Period, Glass: 20 years.
2. Warranty Period, Non-Glass Parts: 10 years.

B. Special Warranty: Installer's standard form in which installer agrees to repair or replace windows that fail due to poor workmanship or faulty installation within the specified warranty period.

1. Warranty Period: 5 years from date of Substantial Completion.

PART 2 PRODUCT

2.1 METAL-CLAD WOOD WINDOWS

A. General: Provide windows complying with the performance requirements indicated and tested according to NAFS.

B. Basis-of-Design Product: Subject to compliance with requirements provide Andersen Corporation: Andersen E-Series windows.

C. Substitution Limitations: Must be approved prior to bid.

2.2 MATERIALS

A. Construction:

1. Cladding: Extruded aluminum, minimum thickness 0.050 inch (1.27 mm).
2. Frame: Preservative treated laminated veneer lumber.
3. Interior Exposed Frame: Preservative treated solid lumber, kiln dried and suitable for stain or painted finish.

4. Sash: Preservative treated solid lumber, kiln dried and suitable for stain or painted finish.

B. Wood Species: Pine

C. Interior Finish:

1. Painted: Factory-applied before assembly, White.

D. Exterior Finish:

1. Painted Frame: Factory-applied baked-on silicone polyester enamel, in compliance with AAMA 2604, color as selected from manufacturer's standard colors of no less than 50 options. It will be the intent to match the existing adjacent window units.
2. Painted Sash: Factory-applied baked-on silicone polyester enamel, in compliance with AAMA 2604 color as selected from manufacturer's standard colors of no less than 50 options. It will be the intent to match adjacent window units.

2.3 WINDOW Types as noted within the drawings

A. Window Type and Performance Requirements**: Double-Hung Insert**.

1. Double-Hung Insert Performance Class LC and Grade, Non-Impact-Resistant: PG30.

B. Air Infiltration Requirements:

1. Air Infiltration Rate: **< 0.2 cfm/sf²**.

C. Environmental Certifications:

1. ENERGY STAR performance requirements.
2. Indoor air quality performance.

D. Weatherstrip:

1. Type and Material for Hung or Gliding: Three fins and pile, polypropylene.

E. Installation Flange Type: None.

E. Hardware:

1. Sash Lock/Tilt Mechanism Type and Material: Self-latching, die-cast zinc.
2. Sash Lift Type and Material: Surface mounted, die-cast zinc.
3. Sash Lock and Sash Lift Finish: Bronze .
4. Balancer Type and Material: Spring-loaded block and tackle, AAMA 902 Class 5 spiral, galvanized steel.
5. Jamb Liner:
   a. Type and Material: Concealed, rigid vinyl.
   b. Color: White.

c. Interior Inserts: Wood-veneered vinyl, species to match window.
d. Exterior Inserts: Aluminum, color to match window.

6. Window Opening Control Device: Provide device to restrict operable sash to less than four inches maximum clear opening and releasable, in compliance with ASTM F2090.

G. Divided Lights:

1. Type: Divided Light Grilles. The intent is to match the existing units to the greatest extent possible.

a. Profile: Ovolo.
b. Width: 5/8 inch.
c. Exterior Attachment: Permanently adhered to glass.
d. Glass Spacer Material: Stainless steel.
e. Pattern: As shown in Drawings.
f. Exterior Aluminum Color: Match window.
g. Interior Wood Species: Match window.
h. Interior Wood Finish: Match window.

H. Insect Screens:

1. Type: Conventional.

a. Frame Material: Aluminum.
b. Painted Finish and Color: Match window frame.
c. Veneered Finish and Species: Wood veneer to match window.
d. Insect Screen Material: Aluminum wire mesh.

I. Exterior Trim and Accessories:

1. Type: 2 inch Brick Mould
2. Finish and Color: Match windows.

2.4 NON-IMPACT-RESISTANT GLAZING

A: Thermal Transmission (U-Factor), NFRC 100:

1. Double-Hung Insert: **0.31 without grilles**.

B. Solar Heat Gain Coefficient (SHGC), NFRC 200:

1. Double-Hung Insert: 0.20 without grilles.

C. Visible Light Transmittance (VLT), NFRC 200:

1. Double-Hung Insert: 0.46 without grilles.

D. Sound Transmission Class (STC)/Outdoor Indoor Transmission Classification (OITC), ASTM E90:

1. Double-Hung: 28/24.

E. Glass Units: Provide insulating glass units certified through Insulating Glass Certification Council as conforming to the requirements of IGCC and ASTM E2190.

1. Manufacturer Designation: Andersen Low-E4 SmartSun Glass.
2. Glazing Configuration: Dual-pane.
3. Tint: None.
4. Seal and Spacer Type: Dual sealed insulating glass units with polyisobutylene primary seal, silicone secondary seal and stainless steel spacers.
5. Glass Type: Annealed glass, ASTM C1036.
6. Opacity: None.

PART 3 EXECUTION

3.1 EXAMINATION

A. Verify that all substrate conditions are suitable for installation in compliance with manufacturer's recommendations.

B. Do not begin installation until substrates have been properly prepared and any conditions not in compliance with manufacturer's recommendations have been corrected.

3.2 INSTALLATION

A. General: Comply with manufacturer's product recommendations, including but not limited to the Andersen Unit Installation Guide, installation information in product literature and on product packaging. Comply with Drawings and Shop Drawings for installing windows, hardware, accessories, and other components.

B. Install windows plumb, level and square. Anchor windows securely to structure in correct orientation to flashing and adjacent construction as indicated. Comply with product installation instructions for proper flashing integration into wall system. Install windows so as to drain water penetration to the exterior.

C. Adjust sashes, insect screens, ventilators, hardware and accessories as applicable for correct fit. Adjust weatherstrip for smooth operation and weather-tight closure.

3.3 FIELD QUALITY CONTROL

A. Manufacturer's Field Services: If requested by Owner, provide manufacturer's field service consisting of product use recommendations and periodic site visits for observation of product installation in accordance with manufacturer's recommendations.

1. Site Visits: (1) Pre-installation visit and (1) post-installation visit..

B. Field Testing: Provide field testing of installed units.

1. Test units in compliance with AAMA 502.
2. Use test equipment calibrated according to ASTM E1105.

3.4 CLEANING

A. Remove protective films and non-permanent labels prior to 90 days after installation.

B. Remove excess sealant, soiling, dirt and other substances. Clean window frame and glass surfaces. Avoid damaging coatings and finishes.

C. Touch-up, repair or replace glass or other window components broken, scratched or damaged during construction prior to Substantial Completion.

D. Remove and lawfully dispose of construction debris from Project site.

3.5 PROTECTION

A. Protect installed windows and finish surfaces from damage during construction until completion of Project and acceptance by Owner.

END OF SECTION

08 71 00 - FINISH HARDWARE

PART 1 - GENERAL

1.1 RELATED DOCUMENTS:

A. Drawings and general provisions of Contract, including General and Supplementary Conditions and Division-1 Specification sections, apply to work of this section.

1.2 DESCRIPTION OF WORK:

A. Definition: "Finish Hardware" includes items known commercially as finish hardware which are required for swing, sliding and folding doors.

B. Extent of finish hardware required is indicated on drawings and in schedules.

C. Types of finish hardware required include the following:

1. Hinges.
2. Lock cylinders and keys.
3. Lock and latch sets.
4. Bolts.
5. Exit devices.
6. Bifold door hardware.
7. Closers.
8. Miscellaneous door control devices.
9. Door trim units.
10. Protection plates.
11. Weatherstripping for exterior doors.
12. Sound stripping for interior doors.
13. Astragals or meeting seals on pairs of doors.

D. Silencers included integral with hollow metal frames are specified with door frames elsewhere in Division 8.

1.3 QUALITY ASSURANCE:

A. Manufacturer: Obtain each type of hardware (latch and lock sets, hinges, closers, etc.) from a single manufacturer, although several may be indicated as offering products complying with requirements.

B. Fire-Rated Openings: Provide hardware for fire-rated openings in compliance with NFiPA Standard No. 80 and local building code requirements. Provide only hardware which has been tested and listed by UL or FM for types and sizes of doors required and complies with requirements of door and door frame labels.

1. Where emergency exit devices are required on fire-rated doors (with supplementary marking on doors' UL or FM labels indicating "Fire Door to be Equipped with Fire Exit Hardware") provide UL or FM label on exit devices indicating "Fire Exit Hardware".

C. ANSI Standards: Provide hardware that meets or exceeds the performance requirements of ANSI A 156.2 for the following applications:

1. Doors in public areas: Series 4000, Grade 1.

1.4 SUBMITTALS:

A. Product Data: Submit manufacturer's technical product data for each item of hardware in accordance with Division-1 section "Submittals". Include whatever information may be necessary to show compliance with requirements, and include instructions for installation and for maintenance of operating parts and finish.

B. Hardware Schedule: Submit hardware schedule in manner indicated below. Coordinate hardware with doors, frames and related work to ensure proper size, thickness, hand, function and finish of hardware.

C. Hardware Schedule Content: Based on finish hardware indicated, organize hardware schedule into "hardware sets" indicating complete designations of every item required for each door or opening. Cross reference to designations in door and hardware schedules in Contract Documents.

D. Keying Schedule: Submit separate detailed schedule indicating clearly how the Owner's final instructions on keying of locks has been fulfilled.

E. Templates: Furnish hardware templates to each fabricator of doors, frames and other work to be factory-prepared for the installation of hardware. Review shop drawings of such other work, to confirm that adequate provisions are made for proper location and installation of hardware.

1.5 PRODUCT HANDLING:

A. Deliver individually packaged hardware items at the proper times to the proper locations (shop or project site) for installation.

B. Provide secure lock-up for hardware delivered to the project, but not yet installed. Control handling and installation of hardware items which are not immediately replaceable, so that completion of the work will not be delayed by hardware losses, both before and after installation.

PART 2 - PRODUCTS

2.1 SCHEDULED HARDWARE:

A. Requirements for design, grade, function, finish, size and other distinctive qualities of each type of finish hardware is indicated in the Finish Hardware Schedule. Products are identified by using hardware designation numbers of the following.

B. Manufacturer's Product Designations: One or more manufacturers are listed for each hardware type required, whose product designation is used in the Hardware Schedule for purposes of establishing minimum requirements. Provide either the product designated, or, where more than one manufacturer is listed, the comparable product of one of the other manufacturers which comply with requirements including those specified elsewhere in this section.

1. Manufacturer: Provide products of one of the following matching existing building hardware products and manufacturers:

a. Locksets: Sargent 10-Line
b. Closers: Sargent.
c. Hinges: McKinney.
d. Panic Devices: Sargent.
e. Door Trim and Accessories: Ives, Rockwood.

C. ANSI/BHMA designations used elsewhere in this section or in schedules to describe hardware items or to define quality or function are derived from the ANSI A 156.1 standards. Provide products complying with these standards and requirements specified elsewhere in this section.

2.2 MATERIALS AND FABRICATION:

A. Hand of door: Drawings show direction of slide, swing or hand of each door leaf. Furnish each item of hardware for proper installation and operation of door as shown.

B. Manufacturer's Name Plate: Do not use manufacturer's products which have manufacturer's name or trade name displayed in a visible location (omit removable nameplates), except in conjunction with required UL labels and as otherwise acceptable to Architect.

1. Manufacturer's identification will be permitted on rim of lock cylinders only.

C. Base Metals: Produce hardware units of basic metal and forming method indicated, using manufacturer's standard metal alloy, composition, temper and hardness, but in no case of lesser (commercially recognized) quality than specified for the applicable hardware units by applicable ANSI A156 series standard for each type hardware item and with ANSI A156.18 for finish designations indicated. Do not furnish "optional" materials or forming methods for those indicated, except as otherwise specified.

D. Fasteners: Provide hardware manufactured to conform to published templates, generally prepared for machine screw installation. Do not provide hardware which has been prepared for self-tapping sheet metal screws, except as specifically indicated.

E. Furnish screws for installation, with each hardware item. Provide Phillips flat-head screws except as otherwise indicated. Finish exposed screws to match hardware finish or, if exposed in surfaces of other work, to match finish of such other work as closely as possible, including "prepared for paint" in surfaces to receive painted finish.

F. Provide concealed fasteners for hardware units which are exposed when door is closed, except to the extent no standard units of the type specified are available with concealed

fasteners. Do not use thru-bolts for installation where bolt head or nut on opposite face is exposed in other work, except where it is not feasible to adequately reinforce the work. In such cases, provide sleeves for each thru-bolt or use hex screw fasteners.

2.4 COMPONENTS:

A. General Hardware Requirements: Where not specifically indicated, comply with applicable ANSI A156 standard for type of hardware required. Furnish each type of hardware with accessories as required for applications indicated and for complete, finished, operational doors.
   1. Templates: Furnish templates or physical hardware items to door and frame manufacturers sufficiently in advance to avoid delay in Work.
   2. Reinforcing Units: Furnished by door and frame manufacturers; coordinated by hardware supplier or hardware manufacturer.
   3. Fasteners: Furnish as recommended by hardware manufacturer and as required to secure hardware.
      a. Finish: Match hardware item being fastened.
   4. Fire Ratings: Provide hardware with UL or Intertek Testing Services (Warnock Hersey Listed) listings for type of application involved.
   5. Electrical Devices: Make provisions and coordinate requirements for electrical devices and connections for hardware.

B. Hinges: ANSI A156.1, full mortise type complying with following general requirements unless otherwise scheduled.
   1. Widths: Sufficient to clear trim projection when door swings 180 degrees.
   2. Number: Furnish minimum three hinges to 90 inches high, four hinges to 120 inches high for each door leaf.
      a. Fire Rated Doors To 86 inches High: Minimum three hinges.
      b. Residential Hollow Core Wood Doors: Furnish minimum three hinges.
   3. Size and Weight: 4-1/2 inch heavy weight typical for 1-3/4 inch doors.
      a. Doors Over 40 inches Wide: Extra heavy weight ball or oilite bearing hinges.
      b. Doors 1-3/8 inch Thick: 3-1/2 inch size.
      c. Doors 2 inch Thick: 5 inch extra heavy weight ball or oilite bearing.
      d. Doors Over 48 inches Wide: 5 inch extra heavy weight ball or oilite bearing.
   4. Pins: Furnish nonferrous hinges with non-removable pins (NRP) at exterior and locked outswinging doors, non-rising pins at interior doors.
   5. Tips: Flat button tips with matching plug.
   6. Provide ball bearing type hinges at all doors.

C. Pivots: Not Applicable

D. Locksets: Furnish locksets compatible with specified cylinders. Typical 2-3/4 inch backset. Furnish standard strikes with extended lips to protect trim from being marred by latch bolt. Verify type of cutouts provided in metal frames.
   1. Mortise Locksets: Not Applicable
   2. Bored (Cylindrical) Locksets: ANSI A156.2, Series 4000, Grade 1 unless otherwise indicated.
   3. Preassembled (Unit) Locksets: Not Applicable
   4. Interconnected Locksets: Not Applicable
   5. Auxiliary Locksets: ANSI A156.5, Grade 1, bored dead locks unless otherwise indicated.

E. Latch Sets: Match locksets. Typical 2-3/4 inch backset. Furnish standard strikes with extended lips to protect trim from being marred by latch bolt. Verify type of cutouts provided in metal frames.
   1. Mortise Latch Sets: Not Applicable
   2. Bored (Cylindrical) Latch Sets: ANSI A156.2, Series 4000, Grade 1 unless otherwise indicated.

F. Exit Devices: ANSI A156.3, Grade 1 rim type, with cross bar, unless otherwise indicated. Furnish standard strikes with extended lips to protect trim from being marred by latch bolt. Verify type of cutouts provided in metal frames, with floor strikes.
   1. Types: Suitable for doors requiring exit devices.
   2. Coordinators: Furnish overhead type at pairs of doors.

G. Electric Strikes: ANSI A156.5 mortised, rim mounted electric strikes.

H. Cylinders: ANSI A156.5, Grade 1, 6 pin type removable cylinders, interchangeable core type cylinders. Coordinate with existing cylinders
   1. Keying: Master Keying system shall be as directed by Owner.
   2. Keys: Nickel silver. Stamp keys with “DO NOT DUPLICATE”.
   3. Supply keys in the following minimum quantities:
      a. 5 master keys.
      b. 5 submaster keys per lockset
      c. 5 extra cylinder cores.

   4. Provide a key control system including envelopes, labels, tags with self-locking key clips, receipt forms, 3-way visible card index, temporary markers, permanent markers, and standard metal cabinet, all as recommended by system manufacturer, with capacity for 150% of the number of locks required for the project.

I. Closers: ANSI A156.4 modern type with cover, surface mounted, center pivot and/or offset pivot closers; full rack and pinion type with steel spring and non-freezing hydraulic fluid; closers required for fire rated doors unless otherwise indicated.
   1. Adjustability: Furnish controls for regulating closing, latching, speeds, and back checking.
   2. Arms: Type to suit individual condition; parallel-arm closers at reverse bevel doors and where doors swing full 180 degrees.
   3. Location: Mount closers on inside of exterior doors, room side of interior doors typical; mount on pull side of other doors.
   4. Operating Pressure: Maximum operating pressure as follows.
      a. Interior Doors: Maximum 5 pounds.
      b. Exterior Doors: Maximum 5 pounds.
      c. Fire Rated Doors: As required for fire rating, maximum 15 pounds.

J. Door Controls and Overhead Holders: Furnish with accessories as required for complete operational installation.
   1. Manual Door Holders: ANSI A156.8, Grade 1 types as specified
   2. Closer Holder Release Devices: ANSI A156.15 door mounted closer holder release devices. Closers with single point hold open designed to make swing doors close manual release.
   3. Electro-Magnetic Door Holder: ANSI A156.15 wall mounted type.

4. Power Assist Door Operators: ANSI A156.19 power mechanism which reduces opening resistance of self-closing door.

K. Sliding and Bi-Folding Door Hardware: Not Applicable.

L. Push/Pulls, Manual Bolts, Protection Plates, Gaskets, Thresholds, and Trim: Furnish as indicated in Schedule, with accessories as required for complete operational door installations.
1. Push/Pulls: ANSI A156.6; push plates minimum 0.050 inch thick. Furnish straight push-pull with push-pull plate type pulls with bolts to secure from opposite door face; furnish with minimum 0.050 inch pull plates unless otherwise indicated.
2. Manual Bolts: ANSI A156.16 Grade 1 top and bottom flush bolts, with dust-proof floor strike, unless otherwise indicated.
3. Kickplates Mop Plate and Armor Plate: ANSI A156.6, metal; height indicated in Schedule by 1 inch less than door width; minimum 0.050 inch thick stainless steel.
4. Weatherstripping: Furnish continuous weatherstripping at top and sides of exterior doors.
5. Fire Rated Gaskets: Furnish continuous fire rated gaskets at top and sides of fire rated doors.
6. Thresholds: Maximum 1/2 inch height.
7. Wall Stops: ANSI A156.1, Grade 1, convex pad wall stop with no visible screws.
8. Floor Stops: ANSI A156.1 Grade 1 dome type with no visible screws; furnish with accessories as required for applications indicated.

2.5 ACCESSORIES:

A. Lock Trim: Furnish levers with rose as selected from manufacturer's full range of levers and roses.
1. Do not permit through bolts on solid wood core doors.

B. Through Bolts: Do not permit through bolts and grommet nuts on door faces in occupied areas unless no alternative is possible.
1. Do not use through bolts on solid wood core doors.

C. Key Cabinet:
1. Cabinet Construction: Sheet steel construction, piano hinged door with cylinder type lock master keyed to building system.
2. Cabinet Size: Size for Project keys plus sufficient room to allow for 10 percent growth.
3. Horizontal metal strips for key hook labeling with clear plastic strip cover over labels.
4. Finish: Baked enamel finish. Color as selected from manufacturer's standard color line.

2.6 FINISHING:

A. Finishes: ANSI A156.18; furnish following finishes except where otherwise indicated in Schedule at end of section.

1. Hinges:
   a. BHMA 630 and 626, satin finish.
2. Typical Exterior Exposed and High Use Interior Door Hardware:
   a. BHMA 630, satin finished stainless steel.
3. Typical Interior Door Hardware:

a. BHMA 626, satin chromium plated brass or bronze.
b. BHMA 630, satin finished stainless steel.

4. Closers: Finish appearance to match door hardware on same face of door.
   a. BHMA 628, satin aluminum, clear anodized.
5. Thresholds: Finish appearance to match door hardware on exterior face of door.
   a. BHMA 628, satin aluminum, clear anodized.
6. Other Items: Furnish manufacturer's standard finishes to match similar hardware types on same door, and maintain acceptable finish considering anticipated use and BHMA category of finish.

2.7 AUTOMATIC DOOR OPERATORS

A. General: Provide operators of size recommended by manufacturer for door size, weight, and movement; for condition of exposure; and for compliance with UL 325. Coordinate operator mechanisms with door operation, hinges, and activation devices.

   1. Fire-Rated Doors: Provide door operators for fire-rated door assemblies that comply with NFPA 80 for fire-rated door components and are listed and labeled by a qualified testing agency.

B. Electromechanical Door Operators: Self-contained units powered by permanent magnet DC motor, with closing speed controlled mechanically by gear train, connections for power, activation and safety device wiring, and manual operation including spring closing when power is off.

C. Electrohydraulic Door Operators: Self-contained low-pressure units with rack and pinion design contained within a cast aluminum housing. Door closing speed controlled by independent hydraulic adjustment valves in the sweep and latch range of the closing cycle. Operator is to provide conventional door closer opening and closing forces unless the power operator motor is activated. Unit is to include an adjustable hydraulic backcheck valve to cushion the door speed if opened violently. Non-handed units for both push and pull side applications.

D. Brackets and Reinforcements: Manufacturer's standard, fabricated from aluminum with nonferrous shims for aligning system components. E. Standard: Certified ANSI/BHMA A156.19.

   1. Performance Requirements:
      a. Opening Force if Power Fails: Not more than 15 lbf required to release a latch if provided, not more than 30 lbf required to manually set door in motion, and not more than 15 lbf required to fully open door.
      b. Entrapment Protection: Not more than 15 lbf required to prevent stopped door from closing or opening.

F. Configuration: Surface mounted. Door operators to control single swinging and pair of swinging doors.

G. Operation: Power opening and spring closing operation capable of meeting ANSI A117.1 accessibility guideline. Provide time delay for door to remain open before initiating closing cycle as required by ANSI/BHMA A156.19. When not in automatic mode, door operator to

function as manual door closer with fully adjustable opening and closing forces, with or without electrical power.

1. On-off switch to control power to be toggle switch operated.

H. Features: Operator units to have full feature adjustments for door opening and closing force and speed, backcheck, motor assist acceleration from 0 to 30 seconds, time delay, vestibule interface delay, obstruction recycle, and hold open time from 0 up to 30 seconds.

I. Provide outputs and relays on board the operator to allow for coordination of exit device latch retraction, electric strikes, magnetic locks, card readers, safety and motion sensors and specified auxiliary contacts.

J. Activation Devices: Provide activation devices in accordance with ANSI/BHMA A156.19 standard, for condition of exposure indicated and for long term, maintenance free operation under normal traffic load operation. Coordinate activation control with electrified hardware and access control interfaces. Activation switches are standard SPST, with optional DPDT availability.

K. Signage: As required by cited ANSI/BHMA A156.19 standard for the type of operator.

1. Acceptable Manufacturers:
   a. LCN 9500 Senior Swing Series Operator

PART 3 - EXECUTION

3.1 INSTALLATION:

A. Mount hardware units at heights indicated in "Recommended Locations for Builders Hardware" for Standard Steel Doors and Frames" by the Door and Hardware Institute, except as specifically indicated or required to comply with governing regulations, and except as may be otherwise directed by Architect. Comply with ADA and ICC/ANSI A117.1-2003.

B. Install each hardware item in compliance with the manufacturer's instructions and recommendations. Wherever cutting and fitting is required to install hardware onto or into surfaces which are later to be painted or finished in another way, coordinate removal, storage and reinstallation or application of surface protections with finishing work specified in the Division-9 sections. Do not install surface-mounted items until finishes have been completed on the substrate.

C. Set units level, plumb and true to line and location. Adjust and reinforce the attachment substrate as necessary for proper installation and operation.

D. Drill and countersink units which are not factory-prepared for anchorage fasteners. Space fasteners and anchors in accordance with industry standards.

E. Set thresholds for exterior doors in full bed of butyl-rubber or polyisobutylene mastic sealant.

3.2 ADJUST AND CLEAN:

A. Adjust and check each operating item of hardware and each door, to ensure proper operation or function of every unit. Replace items which cannot be adjusted to operate freely and smoothly as intended for the application made.

B. Clean adjacent surfaces soiled by hardware installation.

C. Final Adjustment: Wherever hardware installation is made more than one month prior to acceptance or occupancy of a space or area, return to the work during the week prior to acceptance or occupancy, and make final check and adjustment of all hardware items in such space or area. Clean operating items as necessary to restore proper function and finish of hardware and doors. Adjust door control devices to compensate for final operation of heating and ventilating equipment.

D. Initial maintenance: Return to the work one month after occupancy and inspect all doors, adjust hardware as necessary for proper operation and instruct Owner's Personnel in proper adjustment and maintenance of hardware and hardware finishes.

3.3 HARDWARE SCHEDULE

Hardware Heading #1A: Door 101A

Right side leaf upon entry - Active leaf

1	Each	Storage Function Lockset	10U04	Sargent 10-Line
1	Each	Electric Strike	7100 Series	Adams Rite
1	Set	Hinges	2714 Ball Bearing	McKinney
1	Each	Door Closer w/ hold open	281 Series	Sargent
1	Each	Cylinder Core	6300 Series	Sargent
1	Each	Door Top Weatherstripping	347	Pemko
1	Each	Perimeter Weatherstripping (head and jambs)	HSS2000xS88	Pemko
1	Set	Split Astragal	297DPK	Pemko
1	Each	Automatic Door Bottom	430DMPKL	Pemko
1	Each	HD Threshold	2705-T	Pemko
2	Each	Armor Plates	K1050 36" x 34"	Rockwood

Left Side leaf upon entry – Inactive Leaf

1	Set	Surface/ Top & Bottom Bolts	SB360	Ives
1	Set	Push Plate /8” Pull	8300 push plate / 8102HD ¾” Pull	Ives
1	Set	Hinges	2714 Ball Bearing	McKinney
1	Each	Door Closer w/ hold open	281 Series	Sargent
1	Each	Door Top Weatherstripping	347	Pemko

1	Each	Perimeter Weatherstripping (head and jambs)	HSS2000xS88	Pemko
1	Set	Split Astragal	297DPK	Pemko
1	Each	Automatic Door Bottom	430DMPKL	Pemko
1	Each	HD Threshold	2705-T	Pemko
2	Each	Armor Plates	K1050 36" x 34"	Rockwood

Notes:
1. Door to be provided with Card Access control. Coordinate with the existing BGS system.
2. Provide one Threshold extending across entire opening.
3. Provide one Door Top Weatherstripping extending across entire opening.

Hardware Heading #1B: Door 104B, 116

Right side leaf upon entry - Active leaf

1	Each	Storage Function Lockset	10U04	Sargent 10-Line
1	Set	Hinges	2714 Ball Bearing	McKinney
1	Each	Door Closer w/ hold open	281 Series	Sargent
1	Each	Cylinder Core	6300 Series	Sargent
1	Each	Perimeter Weatherstripping (head and jambs)	HSS2000xS88	Pemko
1	Set	Split Astragal	297DPK	Pemko
1	Each	Automatic Door Bottom	430DMPKL	Pemko
1	Each	HD Threshold	2705-T	Pemko
2	Each	Armor Plates	K1050 36" x 34"	Rockwood

Left Side leaf upon entry – Inactive Leaf

1	Set	Surface/ Top & Bottom Bolts	SB360	Ives
1	Set	Push Plate /8” Pull	8300 push plate / 8102HD ¾” Pull	Ives
1	Each	Electric Strike	7100 Series	Adams Rite
1	Set	Hinges	2714 Ball Bearing	McKinney
1	Each	Door Closer w/ hold open	281 Series	Sargent
1	Each	Perimeter Weatherstripping (head and jambs)	HSS2000xS88	Pemko
1	Set	Split Astragal	297DPK	Pemko
1	Each	Automatic Door Bottom	430DMPKL	Pemko
1	Each	HD Threshold	2705-T	Pemko
2	Each	Armor Plates	K1050 36" x 34"	Rockwood

Notes:
1. Door to be provided with Card Access control. Coordinate with the existing BGS system.
2. Provide one Threshold extending across entire opening.
3. Provide one Door Top Weatherstripping extending across entire opening.

Hardware Heading #2A: Door 101B

1	Each	Storage Function Lockset	10U04	Sargent 10-Line
1	Each	Electric Strike	7100 Series	Adams Rite
1	Set	Hinges	2714 Ball Bearing	McKinney
1	Each	Door Closer w/ hold open	281 Series	Sargent
1	Each	Cylinder Core	6300 Series	Sargent
1	Each	Door Top Weatherstripping	347	Pemko
1	Each	Perimeter Weatherstripping (head and jambs)	HSS2000xS88	Pemko
1	Each	Automatic Door Bottom	430DMPKL	Pemko
1	Each	HD Threshold	2705-T	Pemko
2	Each	Armor Plates	K1050 36" x 40"	Rockwood
1	Set	Silencers	SR64	Ives

Notes:
1. Door to be provided with Card Access control. Relocate, rewire and tie existing CA reader to new door 101B. Coordinate with the existing BGS system.

Hardware Heading #2B: Door 102, 104D

1	Each	Storage Function Lockset	10U04	Sargent 10-Line
1	Each	Electric Strike	7100 Series	Adams Rite
1	Set	Hinges	2714 Ball Bearing	McKinney
1	Each	Door Closer w/ hold open	281 Series	Sargent
1	Each	Cylinder Core	6300 Series	Sargent
1	Each	Perimeter Weatherstripping (head and jambs)	HSS2000xS88	Pemko
1	Each	Automatic Door Bottom	430DMPKL	Pemko
1	Each	HD Threshold	2705-T	Pemko
2	Each	Armor Plates	K1050 36" x 40"	Rockwood
1	Set	Silencers	SR64	Ives

Notes:
1. Door to be provided with Card Access control. Coordinate with the existing BGS system.

Hardware Heading #2C: Door 106

1	Each	Storage Function Lockset	10U04	Sargent 10-Line
1	Set	Hinges	2714 Ball Bearing	McKinney
1	Each	Door Closer w/ hold open	281 Series	Sargent
1	Each	Cylinder Core	6300 Series	Sargent
1	Each	Perimeter Weatherstripping (head and jambs)	HSS2000xS88	Pemko
1	Each	Automatic Door Bottom	430DMPKL	Pemko

2	Each	Armor Plates	K1050 36" x 40"	Rockwood
1	Set	Silencers	SR64	Ives

Hardware Heading #2D: Door 111A

1	Each	Storage Function Lockset	10U04	Sargent 10-Line
1	Each	Electric Strike	7100 Series	Adams Rite
1	Set	Hinges	2714 Ball Bearing	McKinney
1	Each	Door Closer w/ hold open	281 Series	Sargent
1	Each	Cylinder Core	6300 Series	Sargent
1	Each	Perimeter Weatherstripping (head and jambs)	HSS2000xS88	Pemko
1	Each	Automatic Door Bottom	430DMPKL	Pemko
1	Set	Silencers	SR64	Ives

Notes:
1. Door to be provided with Card Access control. Coordinate with the existing BGS system.
2. Door to always to allow egress out of the Basement/Lower Level.

Hardware Heading #2E: Doors 114, 111B, 111C, 121B

1	Each	Storage Function Lockset	10U04	Sargent 10-Line
1	Set	Hinges	2714 Ball Bearing	McKinney
1	Each	Door Closer w/ hold open	281 Series	Sargent
1	Each	Cylinder Core	6300 Series	Sargent
1	Each	Perimeter Weatherstripping (head and jambs)	HSS2000xS88	Pemko
1	Each	Automatic Door Bottom	430DMPKL	Pemko
1	Set	Silencers	SR64	Ives

Note:
1. Silencers not required for Door 121B.

Hardware Heading #3: Door 105C

1	Each	Passage Function Lockset	10U15	Sargent 10-Line
1	Set	Hinges	2714 Ball Bearing	McKinney
1	Each	Perimeter Weatherstripping (head and jambs)	HSS2000xS88	Pemko
1	Each	Automatic Door Bottom	430DMPKL	Pemko
2	Each	Armor Plates	K1050 36” x 40"	Rockwood
1	Set	Silencers	SR64	Ives

Hardware Heading #4: Door 104C

Right side leaf upon entry - Active leaf

1	Set	Push Plate /8” Pull	8300 push plate / 8102HD ¾” Pull	Ives
1	Set	Hinges	2714 Ball Bearing	McKinney

1	Each	Door Closer w/ hold open	281 Series	Sargent
1	Each	Perimeter Weatherstripping (head and jambs)	HSS2000xS88	Pemko
1	Set	Split Astragal	297DPK	Pemko
1	Each	Automatic Door Bottom	430DMPKL	Pemko
2	Each	Armor Plate	K1050 36" x 34"	Rockwood

Left Side leaf upon entry – Inactive Leaf

1	Set	Push Plate /8” Pull	8300 push plate / 8102HD ¾” Pull	Ives
1	Set	Hinges	2714 Ball Bearing	McKinney
1	Each	Door Closer w/ hold open	281 Series	Sargent
1	Each	Perimeter Weatherstripping (head and jambs)	HSS2000xS88	Pemko
1	Set	Split Astragal	297DPK	Pemko
1	Each	Automatic Door Bottom	430DMPKL	Pemko
2	Each	Armor Plates	K1050 36" x 34"	Rockwood

Hardware Heading #5: Doors 105A, 105D

1	Each	Cylinder Core	6300 Series	Sargent

Notes:

1. Coordinate cylinder with OHD locking mechanism

Hardware Heading #6: Door 109, 121A

1	Each	Office / Entrance Function Lockset	10U05	Sargent 10-Line
1	Set	Hinges	2714 Ball Bearing	McKinney
1	Each	Cylinder Core	6300 Series	Sargent
1	Each	Armor Plate	K1050 36" x 40"	Rockwood
1	Set	Silencers	SR64	Ives

Note:

1. Silencers not required for Door 121A.

Hardware Heading #7: Door 140 – **INCLUDE AS A NEW DOOR AS PART OF DEDUETIVE ALTERNATE NO.1. DO NOT INCLUDE WITHIN THE BASE BID.**

1	Each	Passage Function Lockset	10U15	Sargent 10-Line
1	Set	Hinges	2714 Ball Bearing	McKinney
1	Set	Silencers	SR64	Ives

END OF SECTION

08 80 00 - GLASS AND GLAZING

PART 1 GENERAL

1.1 RELATED DOCUMENTS:

A. Drawings and general provisions of Contract, including General and Supplementary Conditions and Division-1 Specification sections, apply to work of this section.

1.2 SUMMARY:

A. Extent of glass and glazing work is indicated on drawings and schedules.

B. Types of work in this section include glass and glazing for:
1. Interior borrowed lites, not indicated as "preglazed".
2. Entrances and other doors, not indicated as "preglazed".
3. Communication Window.
4. Low “E” Glazing for exterior windows
5. Resin Panels

C. Related Sections:
1. Drawings and general provisions of Contract including General and Supplementary Conditions and all Division 1 specification sections.
2. Provision of waste management: Section 01 74 19, Construction Waste Management and Disposal.

1.3 SYSTEM DESCRIPTION:

A. Provide glass and glazing that has been produced, fabricated and installed to withstand normal thermal movement, wind loading and impact loading (where applicable), without failure including loss or breakage of glass, failure of sealants or gaskets to remain watertight and airtight, deterioration of glass and glazing materials and other defects in the work.

B. Normal thermal movement is defined as that resulting from an ambient temperature range of 120 deg. F (67 deg. C) and from a consequent temperature range within glass and glass framing members of 180 deg. F (100 deg. C).

C. Deterioration of insulating glass is defined as failure of hermetic seal due to other causes than breakage which results in intrusion of dirt or moisture, internal condensation or fogging, deterioration of protected internal glass coating, if any, resulting from seal failure, and any other visual evidence of seal failure or performance.

D. Interior Glass Deflection: Maximum differential deflection for two adjacent unsupported edges when 50 plf force is applied to one panel at any point up to 42 inches above finished floor less than thickness of glass.

E. Interior Glass Deflection: Maximum differential deflection for two adjacent unsupported edges when 50 plf force is applied to one panel at any point up to 42 inches above finished floor less than thickness of glass.

F. Exterior Glass Deflection: Maximum of 1/175 of glass edge length or 3/4 inch, which ever is less with full recovery of glazing materials.

G. Thermal and Solar Optical Performance: Measured or calculated in accordance with the following:
   1. Maximum U-Values: Comply with ICC IEEC for climate zone in which project is located. Measure in accordance with [AAMA 1503.] [NFRC 100.]
   2. Maximum SHGC: Comply with ICC IEEC for climate zone in which project is located. Measure in accordance with NFRC 200.
   3. Solar Optical Properties: NFRC 300

H. Provide glass and glazing materials for continuity of building enclosure vapor retarder and air barrier.
   1. In conjunction with materials described in Section 07 90 00.
   2. To utilize inner pane of multiple pane sealed units for continuity of air barrier and vapor retarder seal.
   3. To maintain continuous air barrier and vapor retarder throughout glazed assembly from glass pane to heel bead of glazing sealant.

I. Glass Thickness: Select minimum thickness in accordance with ASTM E1300 to resist specified design loads with the following maximum probability of breakage:
   1. Vertical Glass: 8 lites per 1000 for wind loads with 60 seconds maximum load duration.
   2. Minimum Thickness: 1/4 inch for exterior glass.

J. Wind Loads: Design and size glass to withstand positive and negative wind loads acting normal to plane of wall, including increased loads at building corners.
   1. Design Wind Load: As calculated in accordance with applicable code and ASCE 7 with 85 mph basic wind speed, exposure B.

1.4 SUBMITTALS:

A. Section 01 33 00 - Submittal Procedures: Submittal procedures.

B. Product Data: Submit data on product characteristics, performance criteria and limitations.

C. Manufacturer's Installation Instructions: Submit procedure for preparation and installation.

D. Manufacturer's Certificate: Certify products meet or exceed specified requirements.

1.5 QUALITY ASSURANCE:

A. Glazing Standards: Comply with recommendations of Flat Glass Marketing Association (FGMA) "Glazing Manual" and "Sealant Manual" except where more stringent requirements are indicated. Refer to those publications for definitions of glass and glazing terms not otherwise defined in this section or other referenced standards.

B. Safety Glazing Standard: Where safety glass is indicated or required by authorities having jurisdiction or by Chapter 24 GLASS AND GLAZING of IBC 2003, provide type of products indicated which comply with ANSI Z97.1 and testing requirements of 16 CFR Part 1201 for category II materials.
   1. Subject to compliance with requirements, provide safety glass permanently marked with certification label of Safety Glazing Certification Council (SGCC) or other certification agency acceptable to authorities having jurisdiction.

C. Fire Resistance Rated Wire Glass: Provide wire glass products that are identical to those tested per ASTM E 163 (UL 9) and are labeled and listed by UL or other testing and inspecting agency acceptable to authorities having jurisdiction.

D. Insulating Glass Certification Program: Provide insulating glass units permanently marked either on spacers or at least one component pane of units with appropriate certification label of inspecting and testing organization indicated below:
   1. Insulating Glass Certification Council (IGCC).
   2. Associated Laboratories, Inc. (ALI).

E. Single Source Responsibility for Glass: To ensure consistent quality of appearance and performance, provide materials produced by a single manufacturer or fabricator for each kind and condition of glass indicated and composed of primary glass obtained from a single source for each type and class required.

1.6 DELIVERY, STORAGE, AND HANDLING:

A. Protect glass and glazing materials during delivery, storage and handling to comply with manufacturer's directions and as required to prevent edge damage to glass, and damage to glass and glazing materials from effects of moisture including condensation, of temperature changes, of direct exposure to sun, and from other causes.

1.7 PROJECT CONDITIONS:

A. Environmental Conditions: Do not proceed with glazing when ambient and substrate temperature conditions are outside the limits permitted by glazing material manufacturer or when joint substrates are wet due to rain, frost, condensation or other causes.

B. Install liquid sealants at ambient and substrate temperatures above 40 deg. F (4.4? C).

1.8 WARRANTY:

A. General: Warranties shall be in addition to, and not a limitation of, other rights the Owner may have under the Contract Documents.

B. Manufacturer's Special Project Warranty on Insulating Glass: Provide written warranty signed by manufacturer of insulating glass agreeing to furnish f.o.b. point of manufacture, freight allowed project site, within specified warranty period indicated below, replacements for those insulating glass units developing manufacturing defects. Manufacturing defects are defined as failure or hermetic seal of air space (beyond that due to glass breakage) as evidenced by intrusion of dirt or moisture, internal condensation or fogging, deterioration of protected internal glass coatings, if any, and other visual indications of seal failure or performance; provided the manufacturer's instructions for handling, installing, protecting and maintaining units have been complied with during the warranty period.
   1. Warranty Period: Manufacturer's standard but not less than 10 years after date of substantial completion.

PART 2 PRODUCTS

2.1 MANUFACTURERS:

A. Available Manufacturers: Subject to compliance with requirements, manufacturers offering products which may be incorporated in the work include; but are not limited to, the following:

B. Manufacturers of Clear and Tinted Float Glass:
   1. AFG Industries, Inc.
   2. Ford Glass Division.
   3. Guardian Industries Corp.
   4. LOF Glass, Inc.
   5. PPG Industries, Inc.
   6. Saint-Gobain/Euroglass.

C. Manufacturers of Wire Glass:
   1. AFG Industries, Inc.
   2. Guardian Industries Corp.
   3. Hordis Brothers, Inc.
   4. Pilkington Sales (North America) Limited.

D. Manufacturers of Heat-Treated Glass:
   1. AFG Industries, Inc.
   2. Cardinal IG.
   3. Environmental Glass Products.
   4. Falconer Glass Industries.
   5. Ford Glass Division.
   6. Guardian Industries Corp.
   7. Hordis Brothers, Inc.
   8. LOF Glass, Inc.
   9. PPG Industries, Inc.
   10. Saint-Gobain/Euroglass.
   11. Spectrum Glass Prod. Div., H. H. Robertson Co.

12. Viracon, Inc.

E. Manufacturers of Fire and Impact Rated Glazing:
1. Specialty Architectural & Fire Technology International.
2. Technical Glass Products.

F. Manufacturers of Communication Window:
1. Interbank Equipment.

G. Manufacturers of Resin Panel:
1. 3Form.

2.2 GLASS PRODUCTS, GENERAL:

A. Primary Glass Standard: Provide primary glass which complies with ASTM C 1036 requirements, including those indicated by reference to type, class, quality, and, if applicable, form, finish, mesh and pattern.

B. Heat-Treated Glass Standard: Provide heat-treated glass which complies with ASTM C 1048 requirements, including those indicated by reference to kind, condition, type, quality, class, and, if applicable, form, finish, and pattern.

C. Sizes: Fabricate glass to sizes required for glazing openings indicated, with edge clearances and tolerances complying with recommendations of glass manufacturer. Provide thicknesses indicated or, if not otherwise indicated, as recommended by glass manufacturer for application indicated.

2.3 PRIMARY GLASS PRODUCTS:

A. Clear Float Glass: Type I (transparent glass, flat), Class 1 (clear), Quality q3 (glazing select).

B. Wired Glass: Type I (transparent and wired glass, flat), Class 1 (clear), Quality q8 (glazing); complying with ANSI Z97.1; 1/4" thick; of form and mesh pattern indicated below:
1. Polished Wire Glass: Form 1 (wired, polished both sides), Mesh m2 (square).

C. Resin Panel: 3Form Varia Ecoresin. 3/8 inch thick, pattern and finish per interior finish legend.

2.4 HEAT-TREATED GLASS PRODUCTS:

A. Manufacturing Process: Manufacture heat-treated glass as follows:

B. By vertical (tong-held) or horizontal (roller hearth) process, at manufacturer's option, except provide horizontal process where indicated as "tongless" or "free of tong marks".

C. Uncoated Clear Heat-Treated Float Glass: Condition A (uncoated surfaces), Type I (transparent glass, flat), Class 1 (clear), Quality q3 (glazing select), kind as indicated below.
1. Kind FT (fully tempered) where indicated.

2. Kind FT Sandbalsted (fully tempered with sandblasted finish one side) where indicated integral with custom interior guard/handrail system. ¼” with 3/8” mounting holes as indicated on the drawings.

2.5 LOW E GLASS PRODUCTS:

A. Annealed float glass as specified, Class 1. Clear.
1. Clear Low E annealed glass (FG-ECA)
2. Minimum pane thickness: ¼”
3. Product equal to 1”, Solarban 70 (2) + Clear

B. Insulating Glass: ASTM E2190 certified by Insulating Glass Certification Council and Insulating Glass Manufacturers Alliance; with glass elastomer edge seal; purge interpane space with dry hermetic air.
1. Total Unit Thickness: 1 inch unless otherwise indicated.
2. Insulating Glass Unit Edge Seal Construction: Aluminum, thermally broken, bent and soldered corners.

2.6 ELASTOMERIC GLAZING SEALANTS AND PREFORMED GLAZING TAPES:

A. General: Provide products of type indicated and complying with the following requirements:

B. Compatibility: Select glazing sealants and tapes of proven compatibility with other materials with which they will come into contact, including glass products, seals of insulating glass units, and glazing channel substrates, under conditions of installation and service, as demonstrated by testing and field experience.

C. Suitability: Comply with recommendations of sealant and glass manufacturers for selection of glazing sealants and tapes which have performance characteristics suitable for applications indicated and conditions at time of installation.

D. Elastomeric Sealant Standard: Provide manufacturer's standard chemically curing, elastomeric sealant of base polymer indicated which complies with ASTM C 920 requirements, including those for Type, Grade, Class and Uses.
1. Colors: Provide color of exposed sealants indicated or, if not otherwise indicated, as selected by Architect from manufacturer's standard colors.

2.7 GLAZING GASKETS:

A. Dense Elastomeric Compression Seal Gaskets: Molded or extruded gaskets of neoprene or EPDM, complying with ASTM C 864, of profile and hardness required to maintain watertight seal:

2.8 MISCELLANEOUS GLAZING MATERIALS:

A. Compatibility: Provide materials with proven record of compatibility with surfaces contacted in installation.

B. Cleaners, Primers and Sealers: Type recommended by sealant or gasket manufacturer.

C. Setting Blocks: Neoprene, EPDM or silicone blocks as required for compatibility with glazing sealants, 80 to 90 Shore A durometer hardness.

D. Spacers: Neoprene, EPDM or silicone blocks, or continuous extrusions, as required for compatibility with glazing sealant, of size, shape and hardness recommended by glass and sealant manufacturers for application indicated.

E. Edge Blocks: Neoprene, EPDM or silicone blocks as required for compatibility with glazing sealant, of size and hardness required to limit lateral movement (side-walking) of glass.

2.9 COMMUNICATION WINDOW:

A. T1 Series, 24” (w) x 36” (h), ¼” tempered safety glass, pass thru, stainless steel base, natural spacer speak-thru, dark bronze or clear anodized selected by architect, Interbank Equipment, or equal.

B. Single Slider with fixed panel kit, CRL2812F, Single door with fixed panel, Top mount to structural ceiling, Softbrake braking system. Clear glass sliding window with fixed resin panels. Provide pull hardware.

PART 3 EXECUTION

3.1 EXAMINATION:

A. Require Glazier to inspect work of glass framing erector for compliance with manufacturing and installation tolerances, including those for size, squareness, offsets at corners; for presence and functioning of weep system; for existence of minimum required face or edge clearances; and for effective sealing of joinery. Obtain Glazier's written report listing conditions detrimental to performance of glazing work. Do not allow glazing work to proceed until unsatisfactory conditions have been corrected.

3.2 PREPARATION:

A. Clean glazing channels and other framing members to receive glass, immediately before glazing. Remove coatings which are not firmly bonded to substrates. Remove lacquer from metal surfaces where elastomeric sealants are indicated for use.

3.3 GLAZING, GENERAL:

A. Comply with combined printed recommendations of glass manufacturers, of manufacturers of sealants, gaskets and other glazing materials, except where more stringent requirements are indicated, including those of referenced glazing standards.

B. Protect glass from edge damage during handling and installation; use a rolling block in rotating glass units to prevent damage to glass corners. Do not impact glass with metal framing. Use

suction cups to shift glass units within openings; do not raise or drift glass with a pry bar. Rotate glass with flares or bevels along one horizontal edge which would occur in vicinity of setting blocks so that these are located at top of opening. Remove from project and dispose of glass units with edge damage or other imperfections of kind that, when installed, weakens glass and impairs performance and appearance.

C. Apply primers to joint surfaces where required for adhesion of sealants.

3.4 GLAZING:

A. Install setting blocks of proper size in sill rabbet, located one quarter of glass width from each corner, but with edge nearest corner not closer than 6" from corner, unless otherwise required. Set blocks in thin course of sealant which is acceptable for heel bead use.

B. Provide spacers inside and out, of correct size and spacing to preserve required face clearances, for glass sizes larger than 50 united inches (length plus height), except where gaskets or glazing tapes with continuous spacer rods are used for glazing. Provide 1/8" minimum bite of spacers on glass and use thickness equal to sealant width, except with sealant tape use thickness slightly less than final compressed thickness of tape.

C. Provide edge blocking to comply with requirements of referenced glazing standard, except where otherwise required by glass unit manufacturer.

D. Set units of glass in each series with uniformity of pattern, draw, bow and similar characteristics.

E. Provide compressible filler rods or equivalent back-up material, as recommended by sealant and glass manufacturers, to prevent sealant from extruding into glass channel weep systems and from adhering to joint back surface as well as to control depth of sealant for optimum performance, unless otherwise indicated.

F. Force sealants into glazing channels to eliminate voids and to ensure complete "wetting" or bond of sealant to glass and channel surfaces.

G. Tool exposed surfaces of sealants to provide a substantial "wash" away from glass. Install pressurized tapes and gaskets to protrude slightly out of channel, so as to eliminate dirt and moisture pockets.

H. Where wedge-shaped gaskets are driven into one side of channel to pressurize sealant or gasket on opposite side, provide adequate anchorage to ensure that gasket will not "walk" out when installation is subjected to movement.

I. Miter cut wedge-shaped gaskets at corners and install gaskets in manner recommended by gasket manufacturer to prevent pull away at corners; seal corner joints and butt joints with sealant recommended by gasket manufacturer.

3.5 PROTECTION AND CLEANING:

A. Protect glass from breakage immediately upon installation. Do not apply markers to surfaces of glass. Remove nonpermanent labels and clean surfaces.

B. Protect glass from contact with contaminating substances resulting from construction operations. If, despite such protection, contaminating substances do come into contact with glass, remove immediately by method recommended by glass manufacturer.

C. Remove and replace glass which is broken, chipped, cracked, abraded or damaged in other ways during construction period, including natural causes, accidents and vandalism.

D. Wash glass on both faces not more than 4 days prior to date scheduled for inspections intended to establish date of substantial completion in each area of project. Wash glass by method recommended by glass manufacturer.

END OF SECTION

09 21 16 - GYPSUM BOARD ASSEMBLIES

PART 1 - GENERAL

1.1 RELATED DOCUMENTS

A. Drawings and general provisions of Contract including General and Supplementary Conditions and Division 1 specification sections, apply to work of this section.

1.2 SUMMARY

A. Gypsum board with joint treatment.

B. Metal stud wall framing.

C. Metal channel ceiling framing.

1.3 SYSTEM DESCRIPTION

A. Acoustic Attenuation for Identified Interior Partitions: 50-54 STC in accordance with ASTM E90.

1.4 SUBMITTALS

A. Product Data: Provide for gypsum board, joint treatment, accessories and metal framing.

1.5 QUALITY ASSURANCE

A. Perform Work in accordance with ASTM C840. GA-201 - Gypsum Board for Walls and Ceilings. GA-214 - Recommended Specification: Levels of Gypsum Board Finish. GA-216 - Recommended Specifications for the Application and Finishing of Gypsum Board. GA-600 - Fire Resistance Design Manual.

PART 2 - PRODUCTS

2.1 GYPSUM BOARD SYSTEM

A. Manufacturers:
1. Domtar Gypsum Co.
2. Georgia Pacific Corp.
3. Gold Bond Building Products /Div. National Gypsum Co.
4. United States Gypsum Co.

B. Interior Wall Studs and Tracks: ASTM C645; GA-216 and GA-600; galvanized sheet steel, 25 gauge unless otherwise indicated, C shape. Provide (2) 20 gauge studs each side of all door jambs.

C. Interior Wall Studs and Tracks at partitioning 15'-0" and higher above finish floor: Equal to Marino 6SW20. 6x1-5/8, 20GA, Min. Ix of 1.838, Sx of 0.58.

D. Exterior Wall Studs and Tracks – Non-Load Bearing: ASTM C645, GA-216 and GA-600, galvanized sheet steel, 20-gage unless otherwise noted, C-Shape. Provide (2)20-gage studs at all window and door jambs.

E. Furring, Framing, and Accessories: 7/8", 20 Gauge furring channels. ASTM C645. GA-216, and GA-600.

F. Gypsum Board Types: 5/8-inch-thick, maximum available length in place; ends square cut, tapered edges; unless noted otherwise as follows:
   1. Fire Rated Type: ASTM C36 fire resistive, UL rated, 5/8" thick.
   2. Moisture Resistant/Fire Rated Type: ASTM C630, 5/8" thick.

2.2 ACCESSORIES

A. 6 mil poly vapor barrier.

B. Acoustic Insulation: ASTM C665, preformed mineral wool, friction fit type, unfaced, 2.5 inch thick.

C. Acoustic Sealant: Non-hardening, non-skinning, for use in conjunction with gypsum board.

D. Corner Beads: Metal.

E. Edge Trim: GA-201 and GA-216, Type LC bead.

F. Joint Materials: ASTM C475 GA-201 and GA-216, reinforcing tape, joint compound, adhesive, and water.

G. Fasteners: ASTM C1002 Type S12 hardened screws. GA-216.

H. Adhesive: ASTM C557 and GA-216.

I. Textured Finish Materials: Latex based texturing material containing fine aggregate.

J. Lead discs, lead sheet strips as required for proper closure and seals at joints and fastenings. Fully isolate all electrical device boxes as required within X-Ray room.

PART 3 - EXECUTION

3.1 INSTALLATION - METAL STUDS

A. Install studding in accordance with ASTM C754. GA-201, GA-216, GA-600. and manufacturer's instructions.

B. Metal Stud Spacing: As indicated on drawings.

C. Partition Heights: Full height to floor or roof construction above where indicated. Install additional bracing for partitions extending above ceiling.

3.2 INSTALLATION - WALL FURRING

A. Erect wall furring tight to concrete masonry walls; attached in accordance with manufacturer's instructions.

B. Space furring maximum 24 inches o.c., not more than 4 inches from floor and ceiling lines.

C. Install insulation between furring attached to concrete masonry walls in accordance with manufacturer's instructions.

D. Install furring as required for fire resistance ratings indicated.

3.3 INSTALLATION - CEILING FRAMING

A. Install in accordance with ASTM C754 GA-216 and manufacturer's instructions.

B. Coordinate location of hangers with other work. Install ceiling framing independent of walls, columns, and above ceiling work.

C. Reinforce openings in ceiling suspension system which interrupt main carrying channels or furring channels, with lateral channel bracing.

D. Laterally brace entire suspension system.

3.4 INSTALLATION - ACOUSTIC ACCESSORIES

A. Install resilient channels at maximum 24 inches oc. Locate joints over framing members.

B. Place acoustic insulation in partitions tight within spaces, around cut openings, behind and around electrical and mechanical items within or behind partitions, and tight to items passing through partitions.

C. Install acoustic sealant within partitions in accordance with manufacturer's instructions.

3.5 INSTALLATION - GYPSUM BOARD

A. Install gypsum board in accordance with GA-201, GA-216, GA-600, and manufacturer's instructions.

B. Fasten gypsum board to furring or framing with screws.

C. Place control joints consistent with lines of building spaces as directed.

D. Place corner beads at external corners as indicated. Use longest practical length. Place edge trim where gypsum board abuts dissimilar materials.

E. Seal cut edges and holes in moisture resistant gypsum board and exterior gypsum soffit board with sealant.

3.6 JOINT TREATMENT

A. Tape, fill, and sand exposed joints, edges, and corners to produce smooth surface ready to receive finishes, minimum of three coats.

B. Feather coats onto adjoining surfaces so that camber is maximum 1/32 inch.

C. Sanding and final coat of fill is not required at concealed surfaces above ceilings and in inaccessible spaces.

D. Tape all joints within exterior sheathing system.

3.7 TOLERANCES

A. Maximum Variation from True Flatness: 1/8 inch in 10 feet in any direction.

END OF SECTION

09 51 23 - ACOUSTICAL TILE CEILINGS

PART 1 - GENERAL

1.1 RELATED DOCUMENTS:

A. Drawings and general provisions of Contract, including General and Supplementary Conditions and Division 1 Specification Sections, apply to this Section.

1.2 SUMMARY:

A. This Section includes acoustical panel ceilings installed with exposed suspension systems.

1.3 SUBMITTALS:

A. General: Submit the following in accordance with Conditions of Contract and Division 1 Specification Sections.

B. Product data for each type of product specified.

C. Samples for verification purposes of each acoustical panel type, pattern, and color.

1.4 QUALITY ASSURANCE:

A. Installer Qualifications: Engage an experienced Installer who has successfully completed acoustical ceilings similar in material, design, and extent to those indicated for Project.

B. Fire-Performance Characteristics: Provide acoustical ceilings that are identical to those tested for the following fire-performance characteristics, per ASTM test method indicated below, by UL or other testing and inspecting organizations acceptable to authorities having jurisdiction. Identify acoustical ceiling components with appropriate markings of applicable testing and inspecting organization.

C. Surface Burning Characteristics: As follows, tested per ASTM E 84 and complying with ASTM E 1264 for Class A products.

1. Flame Spread: 25 or less.
2. Smoke Developed: 50 or less.

D. Single-Source Responsibility for Ceiling Units: Obtain each type of acoustical ceiling unit from a single source with resources to provide products of consistent quality in appearance and physical properties without delaying progress of the Work.

E. Coordination of Work: Coordinate layout and installation of acoustical ceiling units and suspension system components with other construction that penetrates ceilings or is

supported by them, including light fixtures, HVAC equipment and fire-suppression system components.

1.5 DELIVERY, STORAGE, AND HANDLING:

A. Deliver acoustical ceiling units to project site in original, unopened packages and store them as recommended by manufacturer in a fully enclosed space where they will be protected against damage from moisture, direct sunlight, surface contamination, and other causes.

1.6 EXTRA MATERIAL:

A. Deliver extra materials to Owner. Furnish extra materials described below that match products installed, are packaged with protective covering for storage, and are identified with appropriate labels.

1. Acoustical Ceiling Units: Furnish quantity of full-size units equal to 5.0 percent of amount installed.

PART 2 - PRODUCTS

2.1 GENERAL:

A. Products of one or more manufacturers are listed in schedules to establish standards of performance and characteristics of appearance. Equivalent products of other listed manufacturers may be accepted, as judged solely by the Architect.

2.2 MANUFACTURERS:

A. Manufacturer: Subject to compliance with requirements, provide products of one of the following:

1. Acoustical Panels:

a. USG Corporation
b. Certainteed Corporation

2. Steel Suspension Systems:

a. USG Corporation
b. Chicago Metals, Inc.

2.3 ACOUSTICAL CEILING UNITS, GENERAL:

A. Standard for Acoustical Ceiling Units: Provide manufacturer's standard units of configuration as scheduled that comply with ASTM E 1264 classifications in reference to types, patterns, acoustical ratings, and light reflectance, unless otherwise indicated.

B. Colors and Patterns: Provide products to match appearance characteristics as scheduled for each product type.

1. Product: ACT1: 24-inches x48-inches x7/8-inches, square edge panel, white finish. USG Corporation, Mars Healthcare, High-NRC with Aircare coating, #88256. Minimum 0.85 NRC / 35 CAC.

2.4 METAL SUSPENSION SYSTEMS, GENERAL:

A. Standard for Metal Suspension Systems: Provide manufacturer's standard metal suspension systems of types, structural classifications, and finishes indicated that comply with applicable ASTM C 635 requirements.

1. Finishes and Colors: Provide manufacturer's standard factory-applied finish for type of system indicated. Finish: White.

B. Attachment Devices: Size for 5 times design load indicated in ASTM C 635, Table 1, Direct Hung unless otherwise indicated.

1. Wire for Hangers and Ties: ASTM A 641, Class 1 zinc coating, soft temper.
2. Gage: Provide wire sized to that stress at 3 times hanger design load (ASTM C 635, Table 1, Direct-Hung), will be less than yield stress of wire, but provide not less than 0.106-inch diameter (12 gage).
3. Hanger Rods and Flat Hangers: Mild steel, zinc coated. or protected with rust inhibitive paint.

2.5 NON-FIRE-RESISTANCE-RATED DIRECT-HUNG SUSPENSION SYSTEMS:

A. 7/8-inches Exposed Tee System, USG Corporation, USG DX. Main and cross-runners roll-formed from pre-painted or electrolytic zinc-coated cold-rolled steel sheet, with prefinished metal caps on flanges; other characteristics as follows:

1. Structural Classification: Intermediate-Duty System.

2.6 MISCELLANEOUS MATERIALS:

A. Concealed Acoustical Sealant: Nondrying, nonhardening, non-skinning, non-staining, nonbleeding, gunnable sealant complying with requirement specified in Division 7 Section "Joint Sealers".

PART 3 - EXECUTION

3.1 EXAMINATION:

A. Examine substrates and structural framing to which ceiling system attaches or abuts, with Installer present, for compliance with requirements specified in this and other sections that affect installation and anchorage of ceiling system. Do not proceed with installation until unsatisfactory conditions have been corrected.

3.2 PREPARATION:

A. Measure each ceiling area and establish layout of acoustical units to balance border widths at opposite edges of each ceiling. Avoid use of less-than-half-width units at borders, and comply with reflected ceiling plans.

3.3 INSTALLATION:

A. General: Install acoustical ceiling systems to comply with ASTM C 636 and ASTM E 580 installation standards, per manufacturer's instructions and CISCA "Ceiling Systems Handbook."

B. Arrange acoustical units and orient directionally patterned units in a manner shown by reflected ceiling plans.

C. Suspend ceiling hangers from building structural members and as follows:

1. Install hangers plumb, secure to substrate and free from contact with insulation or other objects within ceiling plenum that are not part of supporting structure or ceiling suspension system. Splay hangers only where required to miss obstructions and offset resulting horizontal forces by bracing, counter splaying, or other equally effective means.
2. Where width of other construction within ceiling plenum produces hanger spacings different than required to support standard suspension system members, install supplemental suspension members and hangers. Size supplemental members and hangers to support ceiling loads within performance limits established by referenced standards.
3. Secure hangers either directly to structures or to inserts, eye screws, or other devices that are secure and appropriate for substrate, and in a manner that will not cause them to deteriorate or otherwise fail due to age, corrosion, or elevated temperatures.

D. Install edge moldings at perimeter of acoustical ceiling area and where necessary to conceal edges of acoustical units.

1. Sealant Bed: Apply continuous ribbon of acoustical sealant, concealed on back of vertical leg before installing moldings.

E. Screw-attach moldings to substrate at intervals not over 24 inches oc. and not more than 3 inches from ends, leveling with ceiling suspension system to tolerance of 1/8 inch in 12'-0". Miter corners accurately and connect securely.

F. Install acoustical panels in coordination with suspension system, with edges concealed by support of suspension members. Scribe and cut panels to fit accurately at borders and at penetrations.

3.4 CLEANING:

A. Clean exposed surfaces of acoustical ceilings, including trim, edge moldings, and suspension members. Comply with manufacturer's instructions for cleaning and touch-up of minor finish damage. Remove and replace work that cannot be successfully cleaned and repaired to permanently eliminate evidence of damage.

END OF SECTION

09 67 23 - RESINOUS FLOORING

PART 1 GENERAL

1.1 SUMMARY

A. Related Sections:
Drawings and general provisions of Contract including General and Supplementary Conditions and all Division 1 specification sections.
Provision of waste management: Section 01 74 19, Construction Waste Management and Disposal.

1.2 SECTION INCLUDES

A. Resinous flooring system as shown on the drawings and in schedules.
B. Resilient wall base and accessories as shown on the drawings and in schedules.

1.3 SYSTEM DESCRIPTION

A. The work shall consist of preparation of the substrate, the furnishing and application of a cementitious urethane based self-leveling seamless flooring system and integral 6-inch coved wall base with quartz aggregate broadcast and methyl methacrylate (MMA) broadcast and pigmented topcoats.
B. The system shall have the color and texture as specified by the Owner with a nominal thickness of 1/4 inch. It shall be applied to the prepared area(s) as defined in the plans strictly in accordance with the Manufacturer's recommendations.
C. Cove base to be applied at locations with seamless flooring system, typical and per manufacturers standard details unless otherwise noted.
D. Transition to adjacent flooring systems to be extruded metal angle as specified in the Interior Finish Legend as defined per Manufacturer’s recommendations unless otherwise noted.

1.4 SUBMITTALS

A. Product Data: Latest edition of Manufacturer's literature including performance data and installation procedures.
B. Manufacturer’s Material Safety Data Sheet (MSDS) for each product being used.
C. Samples: A 3 x 3 inch square sample of the proposed system. Color, texture, and thickness shall be representative of overall appearance of finished system subject to normal tolerances.

1.5 QUALITY ASSURANCE

A. The Manufacturer shall have a minimum of 10 years’ experience in the production, sales, and technical support of epoxy and urethane industrial flooring and related materials.
B. The Applicator shall have experience in installation of the flooring system as confirmed by the manufacturer in all phases of surface preparation and application of the product specified.
D. System shall be in compliance with requirements of United States Department of Agriculture (USDA), Food, Drug Administration (FDA), and local Health Department.
E. System shall be in compliance with the Indoor Air Quality requirements of California section 01350 as verified by a qualified independent testing laboratory.

F. A pre-installation conference shall be held between Applicator, General Contractor and the Owner to review and clarification of this specification, application procedure, quality control, inspection and acceptance criteria and production schedule.

1.6 STORAGE AND PROTECTION

A. The Applicator shall be provided with a dry storage area for all components. The area shall be between 60 F and 85 F, dry, out of direct sunlight and in accordance with the Manufacturer's recommendations and relevant health and safety regulations.
B. Copies of Material Safety Data Sheets (MSDS) for all components shall be kept on site for review by the Engineer or other personnel.

C. Site Requirements

1. Application may proceed while air, material and substrate temperatures are between 60 F and 85 F providing the substrate temperature is above the dew point. Outside of this range, the Manufacturer shall be consulted.
2. The relative humidity in the specific location of the application shall be less than 85 % and the surface temperature shall be at least 5 F above the dew point.
3. The Applicator shall ensure that adequate ventilation is available for the work area. This shall include the use of manufacturer’s approved fans, smooth bore tubing and closure of the work area.
4. The Applicator shall be supplied with adequate lighting equal to the final lighting level during the preparation and installation of the system.

D. Safety Requirements

1. All open flames and spark-producing equipment shall be removed from the work area prior to commencement of application.
2. "No Smoking" signs shall be posted at the entrances to the work area.
3. The Owner shall be responsible for the removal of foodstuffs from the work area.
4. Non-related personnel in the work area shall be kept to a minimum.

1.7 EXTRA MATERIALS

A. Provide manufacturers standard repair kit complete with all components and materials required for patch and repair of floor damage for a minimum of (20) twenty square feet.
B. Provide 5% of resilient accessories of each type and color.

1.8 WARRANTY

A. Dur-A-Flex, Inc. warrants that material shipped to buyers at the time of shipment substantially free from material defects and will perform substantially to Dur-A-Flex, Inc. published literature if used in accordance with the latest prescribed procedures and prior to the expiration date.
B. Dur-A-Flex, Inc. liability with respect to this warranty is strictly limited to the value of the material purchase.

PART 2 PRODUCTS

2.1 MANUFACTURERS

A. Manufacturers:
   a. Dur-A-Flex, Inc., 95 Goodwin Street, East Hartford, CT 06108, Phone: (860) 528-9838, Fax: (860) 528-2802
   b. Or equal Manufacturer of Approved System shall be single source and made in the USA.

2.2 MATERIALS

A. WPFS1 Polymer Floor System: Hybrid, resinous flooring system. Dura-A-Flex, Hybrid-Flex-MB (self-leveling quartz broadcast), MMA topcoat seamless flooring system. Refer to Interior Finish Legend for schedule of materials;

1. System Materials:
   a. Topping: Dur-A-Flex, Inc, Poly-Crete SL resin, SL hardener and SL aggregate.
   b. The aggregate shall be Dur-A-Flex, Inc. Q Rok quartz aggregate.
   c. Broadcast: Dur-A-Flex, Inc. Cryl-A-Glaze G-201, MMA based two-component resin.
   d. Topcoats: Dur-A-Flex, Inc. Cryl-A-Top T-301, MMA based, two-component resin.

2. Patch Materials
   a. Shallow Fill and Patching: Use Dur-A-Flex, Inc. Poly-Crete MD (up to ¼ inch).
   b. Deep Fill and Sloping Material (over ¼ inch): Use Dur-A-Flex, Inc. Poly-Crete WR.

2.3 FLOORING

1. System Materials:
   a. Topping: Dur-A-Flex, Inc, Poly-Crete SL resin, SL hardener and SL aggregate.
   b. The aggregate shall be Dur-A-Flex, Inc. Q Rok quartz aggregate.
   c. Broadcast: Dur-A-Flex, Inc. Cryl-A-Glaze G-201, MMA based two-component resin.
   d. Topcoats: Dur-A-Flex, Inc. Cryl-A-Top T-301, MMA based, two-component resin.

2. Patch Materials
   a. Shallow Fill and Patching: Use Dur-A-Flex, Inc. Poly-Crete MD (up to ¼ inch).
   b. Deep Fill and Sloping Material (over ¼ inch): Use Dur-A-Flex, Inc. Poly-Crete WR.

2.4 PRODUCT REQUIREMENTS

A. Topping — Poly-Crete SL

1.	Percent Reactive	100 %
2.	VOC	0 g/L
3.	Bond Strength to Concrete ASTM D 4541	400 psi, substrates fails
4.	Compressive Strength, ASTM C 579	9,000 psi
5.	Tensile Strength, ASTM D 638	2,175 psi
6.	Flexural Strength, ASTM D 790	5,076 psi
7.	Impact Resistance @ 125 mils, MIL D-3134, No visible damage or deterioration	160 inch lbs

B. Broadcast Coat Cryl-A-Glaze G-201

1.	Percent Reactive,	100 %
2.	VOC	<100 g/L
3.	Water Absorption, ASTM D 570	0.04 %
4.	Tensile Strength, ASTM D 638	2,175 psi
5.	Coefficient of thermal expansion ASTM D 696,	0.000035 in/in/F
6.	Electrical Resistivity, ASTM D 257	
	Volume resistance.	1015 ohm-cm
	Surface resistance,	1012 ohm
7.	Pot Life @ 68 F	10-20 minutes
8.	Cure Time @ 68 F	40-60 minutes
9.	Recoat Time @ 68 F	60 minutes
10.	Multi-coat Application, solution weld	yes

C. Topcoat Cryl-A-Top T-301

1.	Percent reactive resin	100 %
2.	VOC	<100 g/L
3.	Water absorption ASTM D 570	0.4 %
4.	Tensile strength, ASTM D 638	3,550 psi
5.	Tensile modulus, ASTM D 638	300,000 psi
6.	Coefficient of thermal expansion ASTM D 638	0.000035 in/in/F
7.	Electrical resistance ASTM D 257	
	Volume resistance	1015 ohm-cm
	Surface resistance	1012 ohm
8.	Water vapor transmission DIN 53122	0.9 g/cm-hr-mm HG x 10 -9
9.	Potlife @ 68 F	10-15 minutes
10.	Cure time @ 68 F	30-45 minutes
11.	Recoat time @ 68 F	30-45 minutes
12.	Multi-coat application, solution weld	yes

2.3 ACCESSORIES

C. Moldings and Edge Strips: Metal/Vinyl as detailed/scheduled. Refer to the Interior Finish Legend and Schedule.
   1. Metal Profiles: Profilitec, finish: polished stainless steel
   2. Vinyl Wall Base Profiles: Roppe, finish: Match wall base
   3. Vinyl Transition Profiles: Roppe, finish: Match wall base

PART 3 EXECUTION

3.1 EXAMINATION

A. Examine substrates, areas and conditions, with Applicator present, for compliance with requirements for maximum moisture content, installation tolerances and other conditions affecting flooring performance.

1. Verify that substrates and conditions are satisfactory for flooring installation and comply with requirements specified.

3.2 PREPARATION

A. General

1. New and existing concrete surfaces shall be free of oil, grease, curing compounds, loose particles, moss, algae growth, laitance, friable matter, dirt, and bituminous products.

2. Moisture Testing: Perform tests recommended by manufacturer and as follows.
a. Perform anhydrous calcium chloride test ASTM F 1869-98. Application will proceed only when the vapor/moisture emission rates from the slab is less than and not higher than 20 lbs/1,000 sf/24 hrs.
b. Perform relative humidity test using is situ probes, ASTM F 2170. Proceed with installation only after substrates have a maximum 99% relative humidity level measurement.
c. If the vapor drive exceeds 99% relative humidity or 20 lbs/1,000 sf/24 hrs then the Owner and/or Engineer shall be notified and advised of additional cost for the possible installation of a vapor mitigation system that has been approved by the manufacturer or other means to lower the value to the acceptable limit.

3. Mechanical surface preparation
a. Shot blast all surfaces to receive flooring system with a mobile steel shot, dust recycling machine (Blastrac or equal). All surface and embedded accumulations of paint, toppings hardened concrete layers, laitance, power trowel finishes and other similar surface characteristics shall be completely removed leaving a bare concrete surface having a minimum profile of CSP 4-5 as described by the International Concrete Repair Institute.
b. Floor areas inaccessible to the mobile blast machines shall be mechanically abraded to the same degree of cleanliness, soundness and profile using diamond grinders, needle guns, bush hammers, or other suitable equipment.
c. Where the perimeter of the substrate to be coated is not adjacent to a wall or curb, a minimum 1/4 inch key cut shall be made to properly seat the system, providing a smooth transition between areas. The detail cut shall also apply to drain perimeters and expansion joint edges.
d. Cracks and joints (non-moving) greater than 1/8 inch wide are to be chiseled or chipped-out and repaired per manufacturer’s recommendations.
4. At spalled or worn areas, mechanically remove loose or delaminated concrete to a sound concrete and patch per manufactures recommendations.

3.3 APPLICATION

A. General

1. The system shall be applied in five distinct steps as listed below:
   a. Substrate preparation
   a. Topping/overlay application with quartz aggregate broadcast.
   b. Resin application with quartz aggregate broadcast.
   c. Topcoat application
   d. Second topcoat application.

2. Immediately prior to the application of any component of the system, the surface shall be dry and any remaining dust or loose particles shall be removed using a vacuum or clean, dry, oil-free compressed air.

3. The handling, mixing and addition of components shall be performed in a safe manner to achieve the desired results in accordance with the Manufacturer's recommendations.

4. The system shall follow the contour of the substrate unless pitching or other leveling work has been specified by the Architect.

5. A neat finish with well-defined boundaries and straight edges shall be provided by the Applicator.

B. Topping

1. The topping shall be applied as a self-leveling system as specified by the Architect. The topping shall be applied in one lift with a nominal thickness of 1/8 inch.

2. The topping shall be comprised of three components, a resin, hardener and filler as supplied by the Manufacturer.

3. The hardener shall be added to the resin and thoroughly dispersed by suitably approved mechanical means. SL Aggregate shall then be added to the catalyzed mixture and mixed in a manner to achieve a homogenous blend.

4. The topping shall be applied over horizontal surfaces using ½ inch “v” notched squeegee, trowels or other systems approved by the Manufacturer.

5. Immediately upon placing, the topping shall be degassed with a loop roller.

6. Quartz aggregate shall be broadcast to excess into the wet material at the rate of 0.8 lbs/sf.

7. Allow material to fully cure. Vacuum, sweep and/or blow to remove all loose aggregate.

C. Broadcast

1. The broadcast coat resin shall be applied at the rate of 60 sf/gal.

2. The broadcast coat shall be comprised of a liquid component and a hardener powder which is added at the rate in accordance with the Manufacturers recommendations and thoroughly dispersed by mechanical means such as a high speed paddle mixer.

3. Quartz aggregate shall be broadcast into the wet resin at the rate of 0.5 lbs/sf.

4. Allow material to fully cure. Vacuum, sweep and/or blow to remove all loose aggregate.

D. Topcoat

1. The first pigmented topcoat shall be roller applier with a coverage rate of 60 sf/gal.

2. The topcoat shall be comprised of a liquid component and a hardener powder which is to be added at a rate in accordance with the Manufacturer's recommendations and thoroughly dispersed by suitably approved mechanical means such as a high speed paddle mixer.

3. The first topcoat will be allowed to cure then can be sanded or scraped to give desired finish texture

4. The second pigmented topcoat shall be roller applier with a coverage rate of 100 sf/gal.

5. The finish floor will have a nominal thickness of 1/4 inch.

3.4 FIELD QUALITY CONTROL

A. Install carpet in accordance with manufacturer's instructions and Carpet and Rug Institute CRI 104 - Standard for Installation of Commercial Textile Floor covering Materials.

B. Verify carpet match before cutting to ensure minimal variation between dye lots.

C. Lay out carpet and locate seams in accordance with shop drawings:
   1. Locate seams in area of least traffic, out of areas of pivoting traffic, and parallel to main traffic.
   2. Do not locate seams perpendicular through door openings.
   3. Align run of pile in same direction as anticipated traffic and in same direction on adjacent pieces.
   4. Locate change of color or pattern between rooms under door centerline.
   5. Provide monolithic color, pattern, and texture match within any one area, unless otherwise noted.

B. A. Tests, Inspection

   1. The following tests shall be conducted by the Applicator:
      a. Temperature
         1. Air, substrate temperatures and, if applicable, dew point.
      b. Coverage Rates
         1. Rates for all layers shall be monitored by checking quantity of material used against the area covered.

D. Complete installation of protective edge strips, concealing exposed edges.

3.5 CLEANING AND PROTECTION

A. Cure flooring material in compliance with manufacturer’s directions, taking care to prevent their contamination during stages of application and prior to completion of the curing process.

B. Remove masking. Perform detail cleaning at floor termination, to leave cleanable surface for subsequent work of other sections.

C. Clean and vacuum carpet surfaces.

D. Protect flooring surfaces from debris, damage, foot/equipment traffic.

END OF SECTION

09 68 00 - CARPET

PART 1 GENERAL

1.1 SUMMARY

A. Related Sections:
1. Drawings and general provisions of Contract including General and Supplementary Conditions and all Division 1 specification sections.
2. Provision of waste management: Section 01 74 19, Construction Waste Management and Disposal.

1.2 SECTION INCLUDES

A. Entrance walk-off mat for topical installation

1.3 SUBMITTALS

A. Shop Drawings: Indicate size of carpet mat, quantity, floor plan illustrating location(s), finish and color, edge moldings, edge color options

B. Samples: Submit 6-inch x 6-inch samples of each carpet type for selection of color and pattern.

1.4 EXTRA MATERIALS

A. Provide (1) additional entrance walk-off mat per each size specified. Provide to Owner as attic stock.

PART 2 PRODUCTS

2.1 MANUFACTURERS

A. Manufacturers: Mats Inc.

2.2 MATERIALS

A. EM1 Entrance Carpet Walk-Off Mat: needle punched, looped pile, solution dyed polypropylene. Mats Inc., Tough Rib, high-performance walk-off mat. Refer to Interior Finish Legend for schedule of materials;

1. Yarn: 100% UV Solution-dyed polypropylene (extra course 80 denier fiber)
2. Dye Method: 100% Solution Dyed
3. Surface Texture: Textured Loop
4. Face Weight: 24.0 oz
5. Total Height: 3/8-inches
6. Backing: Vinyl back
7. Width: 3-feet x 4-feet, 4-feet x 8-feet, 4-feet x 10-feet. Refer to Interior Finish Legend and Schedule and Overall Architectural Floor Plan for quantity and locations.
8. Install method: Topical

9. Flammability: DOC-FF-1-70 Passes
10. Smoke: Less than 450 (ASTM E-662)
11. Warranties: Commercial Limited 1-year

1.3 ACCESSORIES

1. Moldings and Edge Strips: Integral vinyl tapered molding

PART 3 EXECUTION

3.1 EXAMINATION

A. Verify that floor surfaces are smooth and flat within tolerances specified in Section 03001 and are ready to receive work.

3.2 PREPARATION

A. Clean substrate.

3.4 INSTALLATION

A. Install carpet in accordance with manufacturer's instructions and Carpet and Rug Institute CRI - Standard for Installation of Commercial Loose Lay Textile Floor covering Materials.

B. Verify surface is clean and prepared to receive walk-off mat.

C. Locate the walk-off mat per the drawings.

3.5 CLEANING

A. Clean and vacuum carpet surfaces.

B. Protect flooring surfaces from debris, damage, foot/equipment traffic.

END OF SECTION

09 90 00 - PAINTING AND COATING

PART 1 - GENERAL

1.1 RELATED DOCUMENTS

A. Drawings and general provisions of Contract including General and Supplementary Conditions and Division 1 specification sections apply to Work of this section.

1.2 SECTION INCLUDES

A. Surface preparation and field application of paints and coatings.

1.3 SYSTEM DESCRIPTION

A. Conform to applicable code for flame and smoke rating requirements for products and finishes.

1.4 SUBMITTALS

A. Product Data: Provide data on all finishing products.

B. Samples: Submit coating samples for selection, illustrating range of colors and textures available for each surface finishing product scheduled.

1.5 ENVIRONMENTAL REQUIREMENTS

A. Store and apply materials in environmental conditions required by manufacturer's instructions.

1.6 EXTRA MATERIALS

A. Provide minimum of two (2) gallons of each type and color of coating specified.

PART 2 - PRODUCTS

2.1 MATERIALS

A. Manufacturers: Products of one or more manufacturers are listed in Finish Schedules to establish appearance, performance and quality characteristics. Products of other manufacturers may be accepted subject to preapproval by owner.
   1. Sherwin Williams
   2. No Substitutions

B. Coatings: Ready mixed except field catalyzed coatings of good flow and brushing properties, capable of drying or curing free of streaks or sags.

C. VOC Content: Provide coatings with low or zero VOC content to the greatest extent possible. As a minimum, comply with requirements of Green Seal GS-11:

1. Non flat: 150 g/l.
2. Flat: 50 g/l.

D. Quality: Manufacturer's best quality of each type of product specified.

E. Accessory Materials: Linseed oil, shellac, turpentine, paint thinners and other materials required to achieve the finishes specified, as recommended by coating manufacturer..

2.2 FINISHES

A. Refer to schedule at end of section for surface finish schedule.

PART 3 - EXECUTION

3.1 EXAMINATION AND PREPARATION

A. Verify that substrate conditions are ready to receive Work.

B. Measure moisture content of porous surfaces using an electronic moisture meter. Do not apply finishes unless moisture content is less than 12 percent.

C. Correct minor defects and clean surfaces which affect work of this section.

D. Remove electrical plates, hardware, light fixture trim, escutcheons, and fittings prior to preparing surfaces or finishing.

E. Gypsum Board Surfaces: Fill minor defects with latex compounds. Spot prime defects after repair.

F. Galvanized Surfaces: Remove surface contamination and oils and wash with solvent. Apply coat of etching primer.

G. Uncoated Ferrous Surfaces: Remove scale by wire brushing, sandblasting, clean by washing with solvent. Apply treatment of phosphoric acid solution. Prime paint after repairs.

H. Shop Primed Steel Surfaces: Sand and scrape to remove loose primer and rust, hand or power tool clean, clean surfaces with solvent. Prime bare steel surfaces.

3.2 APPLICATION

A. Apply products in accordance with manufacturer's instructions.

B. Sand transparent finishes lightly between coats to achieve required finish.

C. Back prime interior and exterior woodwork scheduled to receive paint finish with primer paint.

D. Back prime interior woodwork scheduled to receive stain or varnish finish with gloss varnish reduced 25 percent with mineral spirits.

E. Minimum Coating Thickness: As recommended by manufacturer.

F. Prime Coats: Prime material as recommended by manufacturer. Recoat primed surfaces as required to cover suction spots or unsealed areas.

G. Pigmented Surfaces: Completely cover to achieve an opaque, smooth surface of uniform finish, color and appearance. Cloudiness, spotting, holidays, laps, brush marks, runs, sags, ropiness or other imperfections will not be accepted.

H. Transparent Finishes: Provide smooth surface of uniform luster, free of laps, cloudiness, color irregularity, runs, brush marks, orange peel, nail holes or other imperfections.

3.3 CLEANING

A. As work proceeds, promptly remove finishes where spilled, splashed, or spattered.

3.4 SCHEDULE - INTERIOR and EXTERIOR SURFACES

TAG	APPLICATION	COLOR NAME	COLOR NUMBER	FINISH	PRODUCT
	Concrete Block Wall Assemblies	As noted within the Interior Finish Schedule and Legend		Satin	Primer: 1-Coat S-W PrepRite Block Filler, B25W25 Finish: 2-Coats S-W Pro Industrial 0 VOC Satin B66 Series
	Interior Doors, Handrails, Trim	As noted within the Interior Finish Schedule and Legend		Semi-Gloss	Primer: 1-Coat S-W Pro Industrial Pro-Cryl Universal Primer B66-310 Finish: 2-Coats S-W Pro Industrial 0 VOC Acrylic B66-650
	Exterior Doors, Handrails, Trim	As noted within the Interior Finish Schedule and Legend		Semi-Gloss	Primer: 1-Coat S-W Macropoxy 646-100 Fast Cure Epoxy B58-620 Finish: 2-Coats S-W Macropoxy 646-100 Fast Cure Epoxy B58-620
	GWB wall Assemblies	As noted within the Interior Finish Schedule and Legend		Egg-Shell	Primer: 1 Coat S-W Promar 200 Zero VOC Interior Latex Primer B28W2600 0 g/l VOC Finish: 2 Coats S-W Promar 200 Zero VOC Eg-Shel B20-2600 Series o g/l VOC
	GWB Wall Assemblies with Epoxy Finishes	As noted within the Interior Finish Schedule		Gloss	Primer: 1 Coat S-W Promar 200 Zero VOC Interior Latex Primer B28W2600 0 g/l VOC

		and Legend			Finish: 2 Coats S-W Pro Industrial High Performance Epoxy B-67-200 Series
	GWB Ceilings	As noted within the Interior Finish Schedule and Legend		Flat	Primer: 1 Coat S-W Promar 200 Zero VOC Interior Latex Primer B28W2600 0 g/l VOC Finish: 2 Coats S-W Promar 200 Zero VOC Flat B30-200 Series o g/l VOC
	Exposed Ceiling Structure	As noted within the Interior Finish Schedule and Legend		Flat	Primer: 1 Coat S-W Pro Industrial Waterborne Acrylic Dryfall B42 Series Finish: 2 Coats S-W Pro Industrial Waterborne Acrylic Dryfall B42 Series

END OF SECTION

SECTION 09 91 13 - EXTERIOR PAINTING

PART 1 - GENERAL

1.1 RELATED DOCUMENTS

A. Drawings and general provisions of the Contract, including General and Supplementary Conditions and Division 01 Specification Sections, apply to this Section.

1.2 SUMMARY

A. Section includes surface preparation and the application of paint systems on the following exterior substrates:

1. Steel and iron.
2. Galvanized metal.
3. Wood.

1.3 DEFINITIONS

A. MPI Gloss Level 1: Not more than five units at 60 degrees and 10 units at 85 degrees, according to ASTM D 523.

B. MPI Gloss Level 3: 10 to 25 units at 60 degrees and 10 to 35 units at 85 degrees, according to ASTM D 523.

C. MPI Gloss Level 4: 20 to 35 units at 60 degrees and not less than 35 units at 85 degrees, according to ASTM D 523.

D. MPI Gloss Level 5: 35 to 70 units at 60 degrees, according to ASTM D 523.

E. MPI Gloss Level 6: 70 to 85 units at 60 degrees, according to ASTM D 523.

F. MPI Gloss Level 7: More than 85 units at 60 degrees, according to ASTM D 523.

1.4 ACTION SUBMITTALS

A. Product Data: For each type of product. Include preparation requirements and application instructions.

1. Include printout of current "MPI Approved Products List" for each product category specified, with the proposed product highlighted.
2. Indicate VOC content.

B. Samples for Initial Selection: For each type of topcoat product.

C. Product List: Cross-reference to paint system and locations of application areas. Use same designations indicated on Drawings and in schedules. Include color designations.

1.5 MAINTENANCE MATERIAL SUBMITTALS

A. Furnish extra materials that match products installed and that are packaged with protective covering for storage and identified with labels describing contents.

1. Paint: 1 gal. of each material and color applied.

1.6 DELIVERY, STORAGE, AND HANDLING

A. Store materials not in use in tightly covered containers in well-ventilated areas with ambient temperatures continuously maintained at not less than 45 deg F.

1. Maintain containers in clean condition, free of foreign materials and residue.
2. Remove rags and waste from storage areas daily.

1.7 FIELD CONDITIONS

A. Apply paints only when temperature of surfaces to be painted and ambient air temperatures are between 50 and 95 deg F.

B. Do not apply paints in snow, rain, fog, or mist; when relative humidity exceeds 85 percent; at temperatures less than 5 deg F above the dew point; or to damp or wet surfaces.

PART 2 - PRODUCTS

2.1 MANUFACTURERS

A. Products: Subject to compliance with requirements, provide available products listed in the Exterior Painting Schedule for the paint category indicated.

2.2 PAINT, GENERAL

A. MPI Standards: Products shall comply with MPI standards indicated and shall be listed in its "MPI Approved Products Lists."

B. Material Compatibility:

1. Materials for use within each paint system shall be compatible with one another and substrates indicated, under conditions of service and application as demonstrated by manufacturer, based on testing and field experience.
2. For each coat in a paint system, products shall be recommended in writing by topcoat manufacturers for use in paint system and on substrate indicated.

C. VOC Content: Products shall comply with VOC limits of authorities having jurisdiction.

D. Colors: As selected by Architect from manufacturer's full range.

2.3 SOURCE QUALITY CONTROL

A. Testing of Paint Materials: Owner reserves the right to invoke the following procedure:

1. Owner will engage the services of a qualified testing agency to sample paint materials. Contractor will be notified in advance and may be present when samples are taken. If paint materials have already been delivered to Project site, samples may be taken at Project site. Samples will be identified, sealed, and certified by testing agency.
2. Testing agency will perform tests for compliance with product requirements.
3. Owner may direct Contractor to stop applying paints if test results show materials being used do not comply with product requirements. Contractor shall remove noncomplying paint materials from Project site, pay for testing, and repaint surfaces painted with rejected materials. Contractor will be required to remove rejected materials from previously painted surfaces if, on repainting with complying materials, the two paints are incompatible.

PART 3 - EXECUTION

3.1 EXAMINATION

A. Examine substrates and conditions, with Applicator present, for compliance with requirements for maximum moisture content and other conditions affecting performance of the Work.

B. Maximum Moisture Content of Substrates: When measured with an electronic moisture meter as follows:

1. Wood: 15 percent.

C. Verify suitability of substrates, including surface conditions and compatibility, with existing finishes and primers.

D. Proceed with coating application only after unsatisfactory conditions have been corrected.

1. Application of coating indicates acceptance of surfaces and conditions.

3.2 PREPARATION

A. Comply with manufacturer's written instructions and recommendations in "MPI Architectural Painting Specification Manual" applicable to substrates and paint systems indicated.

B. Remove hardware, covers, plates, and similar items already in place that are removable and are not to be painted. If removal is impractical or impossible because of size or weight of item, provide surface-applied protection before surface preparation and painting.

1. After completing painting operations, use workers skilled in the trades involved to reinstall items that were removed. Remove surface-applied protection.

C. Clean substrates of substances that could impair bond of paints, including dust, dirt, oil, grease, and incompatible paints and encapsulants.

1. Remove incompatible primers and reprime substrate with compatible primers or apply tie coat as required to produce paint systems indicated.

D. Steel Substrates: Remove rust, loose mill scale, and shop primer if any. Clean using methods recommended in writing by paint manufacturer.

E. Shop-Primed Steel Substrates: Clean field welds, bolted connections, and areas where shop paint is abraded. Paint exposed areas with the same material as used for shop priming to comply with SSPC-PA 1 for touching up shop-primed surfaces.

F. Galvanized-Metal Substrates: Remove grease and oil residue from galvanized sheet metal by mechanical methods to produce clean, lightly etched surfaces that promote adhesion of subsequently applied paints.

G. Wood Substrates:

1. Scrape and clean knots. Before applying primer, apply coat of knot sealer recommended in writing by topcoat manufacturer for exterior use in paint system indicated.
2. Sand surfaces that will be exposed to view, and dust off.
3. Prime edges, ends, faces, undersides, and backsides of wood.
4. After priming, fill holes and imperfections in the finish surfaces with putty or plastic wood filler. Sand smooth when dried.

H. Plastic Trim Fabrication Substrates: Remove dust, dirt, and other foreign material that might impair bond of paints to substrates.

3.3 APPLICATION

A. Apply paints according to manufacturer's written instructions and recommendations in "MPI Architectural Painting Specification Manual."

1. Use applicators and techniques suited for paint and substrate indicated.
2. Paint surfaces behind movable items same as similar exposed surfaces. Before final installation, paint surfaces behind permanently fixed items with prime coat only.
3. Paint both sides and edges of exterior doors and entire exposed surface of exterior door frames.
4. Paint entire exposed surface of window frames and sashes.
5. Do not paint over labels of independent testing agencies or equipment name, identification, performance rating, or nomenclature plates.
6. Primers specified in painting schedules may be omitted on items that are factory primed or factory finished if acceptable to topcoat manufacturers.

B. Tint undercoats same color as topcoat, but tint each undercoat a lighter shade to facilitate identification of each coat if multiple coats of same material are to be applied. Provide sufficient difference in shade of undercoats to distinguish each separate coat.

C. If undercoats or other conditions show through topcoat, apply additional coats until cured film has a uniform paint finish, color, and appearance.

D. Apply paints to produce surface films without cloudiness, spotting, holidays, laps, brush marks, roller tracking, runs, sags, ropiness, or other surface imperfections. Cut in sharp lines and color breaks.

3.4 FIELD QUALITY CONTROL

A. Dry Film Thickness Testing: Owner may engage the services of a qualified testing and inspecting agency to inspect and test paint for dry film thickness.

1. Contractor shall touch up and restore painted surfaces damaged by testing.
2. If test results show that dry film thickness of applied paint does not comply with paint manufacturer's written recommendations, Contractor shall pay for testing and apply additional coats as needed to provide dry film thickness that complies with paint manufacturer's written recommendations.

3.5 CLEANING AND PROTECTION

A. At end of each workday, remove rubbish, empty cans, rags, and other discarded materials from Project site.

B. After completing paint application, clean spattered surfaces. Remove spattered paints by washing, scraping, or other methods. Do not scratch or damage adjacent finished surfaces.

C. Protect work of other trades against damage from paint application. Correct damage to work of other trades by cleaning, repairing, replacing, and refinishing, as approved by Architect, and leave in an undamaged condition.

D. At completion of construction activities of other trades, touch up and restore damaged or defaced painted surfaces.

3.6 EXTERIOR PAINTING SCHEDULE

A. Steel and Iron Substrates:

1. Alkyd System:

a. Prime Coat: Primer, alkyd, anticorrosive, for metal, MPI #79.
b. Intermediate Coat: Exterior, alkyd enamel, matching topcoat.
c. Topcoat: Alkyd, exterior, gloss (MPI Gloss Level 6), MPI #9.

B. Galvanized-Metal Substrates:

1. Alkyd System:

a. Prime Coat: Primer, galvanized, cementitious, MPI #26.
b. Intermediate Coat: Exterior, alkyd enamel, matching topcoat.
c. Topcoat: Alkyd, exterior, gloss (MPI Gloss Level 6), MPI #9.

C. Wood Substrates: Wood trim, Architectural woodwork, Doors, and Windows.

1. Latex System:

a. Prime Coat: Primer, alkyd for exterior wood, MPI #5.
b. Intermediate Coat: Latex, exterior, matching topcoat.
c. Topcoat: Latex, exterior, semi-gloss (MPI Gloss Level 5), MPI #11.

D. Plastic Trim Fabrication Substrates:

1. Latex System:

a. Prime Coat: Primer, bonding, water based, MPI #17.
b. Intermediate Coat: Latex, exterior, matching topcoat.
c. Topcoat: Latex, exterior, semi-gloss (MPI Gloss Level 5), MPI #11.

END OF SECTION

SECTION 21 10 00 - FIRE-SUPPRESSION SPRINKLER SYSTEM

PART 1 - GENERAL

1.1 RELATED DOCUMENTS

A. Drawings and general provisions of the Contract, including General and Supplementary Conditions and Division 1 Specification Sections, apply to this Section.

1.2 SUMMARY

A. The fire protection system shall be an automatic, single interlock pre-action sprinkler system, connected to the existing sprinkler riser in the basement, to serve the renovated spaces throughout. The system shall be arranged to properly protect the building and shall meet NFPA 13, local, and State requirements.

B. This Section includes fire-suppression sprinklers, piping, and equipment.

C. The Sprinkler Contractor shall place the sprinkler system in service and hand over the sprinkler system to the General Contractor for care and maintenance.

D. Performance and Design Criteria: Provide products and systems complying with specific performance and design criteria indicated.

E. Coordinate with Division 26 requirements for integration with the fire alarm system.

1.3 SYSTEM PERFORMANCE REQUIREMENTS

A. Design sprinklers and obtain approval from authorities having jurisdiction. The design of the automatic sprinkler system shall be complete with all necessary accessories for proper operation.

B. The system shall be hydraulically calculated in accordance with all provisions of the Contract Documents and any authority having jurisdiction.

C. The contract documents do not include a fire pump. Provide over-sized piping as required to meet required system hydraulics. Contractor shall review the civil plans, the existing site and existing fire flow data. If the contractor or authority with jurisdiction determines that a fire pump is required: Provide in accordance with NFPA 20, "Stationary Pumps for Fire Protection," for fire pumps, drivers, controllers, accessories, and their installation.

D. Design sprinkler piping according to the following and obtain approval from authorities having jurisdiction:

1. Include a 5 percent margin of safety for available water flow and pressure.
2. Include losses through water-service piping, valves, and backflow preventers.

E. Sprinkler Occupancy Hazard Classifications:

1. Light Hazard:

a. Office and Public Areas
b. Corridors

2. Ordinary Hazard, Group 1:

a. General Storage Areas
b. Mechanical Equipment Rooms
c. Building Service Areas.
d. Electrical Equipment Rooms

3. Ordinary Hazard, Group 2

a. Museum Storage Area
b. BGS Storage Area
c. Receiving Area

F. Minimum Density for Automatic-Sprinkler Piping Design shall be in accordance with NFPA 13. Maximum Protection Area per Sprinkler shall be in accordance with NFPA 13.

1.4 GENERAL REQUIREMENTS

A. Components and Installation: Capable of producing piping systems with 175-psig minimum working-pressure rating, unless otherwise indicated.

B. Protect all systems from freezing. Provide freeze protection for sprinklers in unheated areas with a dry pipe system.

C. Bundled/Grouped wired in concealed spaces: Non-combustible spaces having 15 or more non-plenum-rated wires grouped together shall be fully sprinklered.

D. Seismic Performance: If required by the authority with jurisdiction, fire-suppression piping shall be capable of withstanding the effects of earthquake motions determined according to NFPA 13.

E. Elevators: Provide sprinkler protection in accordance with authority with jurisdiction requirements.

F. Coordinate fire department connection type and location with local fire department.

G. The sprinkler contract starts inside the sprinkler valve room with a connection to the water entry. Coordinate with the site contractor.

H. Fire-Barrier Penetrations: Maintain indicated fire rating of walls, partitions, ceilings, and floors at pipe penetrations. Seal pipe penetrations with fire stop materials. Refer to Division 7 for materials. Seal all penetrations through fire-or smoke-rated wall, partition, ceiling, or roof

assemblies with firestopping system. Refer to Architectural plans for location of rated assemblies.

I. Contractor shall obtain and pay for required permits.

1.5 SUBMITTALS

A. Shop Drawings: Submit working plans, prepared according to NFPA 13, and hydraulic calculations with cross reference to applicable drawings, water supply data, and equipment schedule with ratings for the system to the Owner's Representative, Insurance Underwriter, and other authorities having jurisdiction.

B. Product Data: Catalog sheets, specifications, and installation instructions. Indicate UL or FM approval for each product. Include the following additional information:

1. Pipe and fitting materials and methods of joining for sprinkler piping.
2. Pipe hangers and supports.
3. Piping seismic restraints.
4. Valves, including specialty valves, accessories, and devices.
5. Alarm devices. Include electrical data.
6. Electrical Devices: Complete description of intended use, wiring diagrams, data plate information and, in the case of switching devices, whether normally on or normally off. Include motor test data.
7. Mechanical Devices: Complete description of intended use, including normal operating capacities and working pressures.
8. Enclosures: Dimensions, materials, gages of metals; type of door hinges and locks, and methods of securing the enclosure members to the building construction.
9. Hose Threads: Verify that hose threads on fire department connections match threads on equipment used by the local or servicing fire department.

C. Design Data: The portions of the sprinkler system not sized on the Contract Drawings shall be sized in accordance with NFPA requirements for Hydraulically Designed Systems. Submit drawings and hydraulic calculations for approval.

D. Delegated-Design Submittal: In addition to Shop Drawings, Product Data, and other required submittals, submit three copies of a statement, signed and sealed by the responsible sprinkler system design professional. Indicate that products and systems comply with performance and design criteria in the Contract Documents. Certification: Submit Contractor's NICET certification and number or PE license number.

E. Field Test Reports and Certificates: Indicate and interpret test results for compliance with performance requirements and as described in NFPA 13. Include "Contractor's Material and Test Certificate for Aboveground Piping" and "Contractor's Material and Test Certificate for Underground Piping."

F. Maintenance Data: For each type of sprinkler specialty to include in maintenance manuals specified in Division 1.

1.6 QUALITY ASSURANCE

A. Sprinkler Contractor

1. Installer Qualifications: An experienced installer who has designed and installed fire-suppression piping similar to that indicated for this Project and obtained design approval and inspection approval from authorities having jurisdiction.
2. Engineering Responsibility: Preparation of working plans, calculations, and field test reports by a qualified sprinkler designer. Base calculations on results of fire hydrant flow test. Sprinkler designer shall be legally qualified and licensed to practice in jurisdiction where Project is located and who is experienced in providing engineering services of the kind indicated. Engineering services are defined as those performed for installations of fire-suppression piping that are similar to those indicated for this Project in material, design, and extent. Perform fire-hydrant flow test according to NFPA 13 and NFPA 291.
3. Contractor shall be a licensed fire sprinkler contractor.

B. Manufacturer Qualifications:

1. Firms whose equipment, specialties, and accessories are listed by product name and manufacturer in UL's "Fire Protection Equipment Directory" and FM's "Fire Protection Approval Guide" and that comply with other requirements indicated.
2. Sprinkler Components: Listing/approval stamp, label, or other marking by a testing agency acceptable to authorities having jurisdiction.
3. Electrical Components, Devices, and Accessories: Listed and labeled as defined in NFPA 70, Article 100, by a testing agency acceptable to authorities having jurisdiction.
4. Factory Mutual Engineering Corporation (FM) Approval Guide

C. NFPA Requirements: Year edition per authority of jurisdiction.

1. NFPA #1: Fire Prevention Code
2. NFPA #13: Standard for the Installation of Sprinkler Systems
3. NFPA #101: Life Safety Code
4. NFPA #291: Recommend Practice for Flow Testing and Marking of Hydrants.

1.7 COORDINATION

A. Arrange for pipe spaces, chases, slots, and openings in building structure during progress of construction, to allow for fire-suppression installations.

B. Coordinate installation of required supporting devices and set sleeves in poured-in-place concrete and other structural components as they are constructed.

C. Coordinate requirements for access panels and doors for fire-suppression items requiring access that are concealed behind finished surfaces. Access panels and doors are specified in Division 8.

1.8 EXTRA MATERIALS

A. Furnish extra materials described below that match products installed and that are packaged with protective covering for storage and identified with labels describing contents. Sprinkler Cabinets: Finished, wall-mounting steel cabinet and hinged cover, with space for a minimum of six spare sprinklers plus sprinkler wrench. Include the number of sprinklers required by NFPA 13 and wrench for sprinklers. Include separate cabinet with sprinklers and wrench for each type of sprinkler on Project.

PART 2 - PRODUCTS

2.1 PIPING

A. Pipe and fittings shall conform to the requirements of NFPA 13. Pipe shall be listed by UL and be FM approved, and installed per its listing and approval.

B. Wet sprinkler piping shall be black steel Schedule 40 for 1 inch and smaller, and Schedule 10 for 1-½ inch and larger.

C. Dry sprinkler piping shall be black steel Schedule 40.

D. System piping shall be substantially supported to the building structure. The installation of hangers and supports shall adhere to the requirements set forth in N.F.P.A. 13. Materials used in the installation or construction of hangers and supports shall be listed and approved for such application.

2.2 JOINING MATERIALS

A. Furnish in accordance with NFPA 13.

B. Transition Couplings: AWWA C219, sleeve type, or other manufactured fitting the same size as, with pressure rating at least equal to, and with ends compatible with piping to be joined.

2.3 SPRINKLERS

A. Fire sprinklers shall be of one manufacturer throughout the building. No mixing of sprinkler brands shall be permitted. Sprinklers shall be of all brass frame construction with a quick response frangible bulb type fusible element.

B. Automatic Sprinklers: With U.L. listed heat-responsive elements.

C. Sprinkler Types and Categories: Nominal 1/2-inch orifice for "Ordinary" temperature classification rating, unless otherwise indicated or required by application.

D. Provide quick response sprinklers.

E. Institutional Semi-Recessed or "Vandal-Resistant" sprinkler heads as required by application.

F. Sprinkler Escutcheons: Materials, types, and finishes of sprinklers. Escutcheons for concealed, flush, and recessed-type sprinklers are specified with sprinklers.

G. Sprinkler Guards: Wire-cage type, including fastening device for attaching to sprinkler.

2.4 SPRINKLER SPECIALTY FITTINGS

A. Sprinkler specialty fittings shall be UL listed or FMG approved, with 175-psig minimum working-pressure rating, and made of materials compatible with piping.

B. Sprinkler Drain and Alarm Test Fittings: Cast- or ductile-iron body; with threaded or locking-lug inlet and outlet, test valve, and orifice and sight glass.

C. Sprinkler Branch-Line Test Fittings: Brass body with threaded inlet, capped drain outlet, and threaded outlet for sprinkler.

D. Sprinkler Inspector's Test Fitting: Cast- or ductile-iron housing with threaded inlet and drain outlet and sight glass.

E. Drop-Nipple Fittings: UL 1474, adjustable with threaded inlet and outlet, and seals.

F. Dry-Pipe-System Fittings: UL listed for dry-pipe service.

G. Contractor Option: Provide flexible sprinkler hose with fittings intended for use in sprinkler systems between the branch line and sprinkler. Provide in accordance with NFPA 13 and the manufacturer’s installation instructions. Length: 38”.

1. U.L. 2443 listed for sprinkler hose application.
2. Flexible Hose: Corrugated Stainless Steel AISI 304
3. Slip Nuts: Brass C3771BC
4. Reducer Fitting: Yellow Zinc/Steel SPPS
5. Special Shoulder Nipple (Inlet): Yellow Zinc/Steel SPPS
6. Reducing Nipple Clamp & Bolt: Galvanized Steel SS41
7. Maximum Working Pressure of Flexible Connection: 200 PSI
8. Test Pressure of Flexible Connection: 400 PSI
9. Maximum Temperature Rating of Flexible Connection: 300 °F
10. Provide ceiling bracket.

2.5 VALVES

A. Valves shall be UL listed and FMG approved

B. An NFPA-13 compliant setup including a backflow device, system control valve, flow switch, inspectors test, drain, and pressure gauge may be provided in lieu of an alarm valve.

C. System Control Valve: The wet system control valve shall be a listed indicating type valve. Control valve shall be UL Listed and Factory Mutual Approved for fire protection installations. System control valve shall be rated for normal system pressure but in no case less than 175 PSI.

D. Manual or automatic air venting valve to exhaust trapped air in the wet sprinkler system.

E. Dry-Pipe Valves:

1. Standard: UL 260.
2. Design: Differential-pressure type.
3. Include UL 1486, quick-opening devices, trim sets for air supply, drain, priming level, alarm connections, ball drip valves, pressure gauges, priming chamber attachment, and fill-line attachment.
4. Air-Pressure Maintenance Device:

   a. Standard: UL 260.
   b. Type: Automatic device to maintain minimum air pressure in piping.
   c. Include shutoff valves to permit servicing without shutting down sprinkler piping, bypass valve for quick filling, pressure regulator or switch to maintain pressure, strainer, pressure ratings with 14- to 60-psig adjustable range, and 175-psig outlet pressure.

5. Air Compressor:

   a. Standard: UL's "Fire Protection Equipment Directory" or FM Global's "Approval Guide."
   b. Motor Horsepower: Fractional.
   c. Sized for application and capable of achieving system supervisory pressure within 30 minutes in accordance with requirements of NFPA 13. Provide ASME air receiver tank as required to meet requirements on larger systems.
   d. Include filters, relief valves, coolers, automatic drains, and gauges.

F. Automatic (Ball Drip) Drain Valves:

1. Standard: UL 1726.
2. Pressure Rating: 175-psig minimum.
3. Type: Automatic draining, ball check.
4. Size: NPS 3/4.
5. End Connections: Threaded.

2.6 PREACTION SYSTEM

A. Single Interlock Preaction System shall be a Reliable Model DDX Single Interlock Preaction System (Bulletin 749). System shall discharge water to the sprinkler piping distribution upon activation of the detection system. This event will cause the control panel to energize the solenoid valve, thereby releasing water through the deluge the pushrod chamber supply valve and into the sprinkler system.

1. An electrical fire detection device (smoke, heat, etc.) must be activated.
2. Mechanical damage or activation at a sprinkler head will not cause discharge of water ot the system but will send a low air pressure supervisory signal to the panel.

B. Single Interlock deluge valve shall be a cULus Listed and FM Approved hydraulically operated, differential latching clapper-type valve. Deluge valve for the Single Interlock Preaction System

shall be activated by electric actuation trim. Deluge valve trim shall be galvanized. Valve construction shall be of lightweight, ductile-iron construction with "screw in" stainless steel seat and clapper assembly. Seat shall have O-ring seals to resist corrosion and leakage. Clapper facing shall be pressure actuated, providing a limited compression seat for the sealing force between the clapper rubber facing and the valve seat. Valve shall have an external reset knob for resetting the clapper without having to remove the valve face plate. Push-rod chamber design shall consist of a stainless steel piston/pushrod and spring assembly with diaphragm seal secured to the casting through a pushrod guide constructed of a synthetic engineering plastic to resist corrosion. Casting shall have a bleeder hole located on the pushrod chamber for air/water leakage indication. Trip ratio shall be approximately a 3:1 force differential. Valve shall be of the straight-through design to minimize friction loss and shall be activated by pneumatic actuation trim. Inlet restriction orifice shall be factory installed into inlet port of deluge valve push-rod cover plate and not be a separate part of the valve trim. Valve trim shall consist of galvanized and brass components specifically cULus Listed and FM Approved with the deluge valve. Trim components shall include 2" main drain, alarm line test, water pressure gauges, push rod chamber supply connections, manual emergency release valve, and closed drain assembly. Condensate drain valve shall also be included to prevent water columning above the clapper. Deluge valve shall have a rated working pressure of 250 psi (17.2 bar) and shall be factory hydrostatic tested at 500 psi (34.5 bar) for valves up to 2 ½" and 300 psi (20.7 bar) with a factory hydrostatic test at 600 psi (41.4 bar) for 4" and 6" valves.

C. Deluge valve releasing device shall be a solenoid valve constructed of a brass body with stainless steel sleeve tube, springs, stop and plunger, and with ½" female NPT end connections. Solenoid valve shall have a maximum working pressure of 175 psi (12,1 bar) and maximum ambient temperature rating of 150ºF (66ºC). Power consumption of integrated coil shall be limited to 10 watts and require 24 VDC from a releasing control panel listed for such service. Solenoid valve shall be a Skinner ½" normally closed solenoid valve, Model 73218BN4UNLVNOC111C2.

D. Single Interlock deluge valve shall be the Reliable Model DDX. Refer to Reliable Bulletin 749 for associated information.

E. System Component

1. System Control Valve

a. A slow close grooved indicating butterfly control valve shall be cULus Listed and FM Approved for fire protection systems. The valve shall have AWWA C606 grooved end connections with integral supervisory tamper switch. The valve shall be supervised **[**Open (yellow indicator)**] [**Closed (white indicator)**]**. The valve body construction shall be coated brass with Nylon-11, an EPDM encapsulated coated disc in accordance with ASTM A-536, and 416 stainless steel stem. The valve shall have a weatherproof gear operator rated for indoor/outdoor use with handwheel and raised position indicator. Two internal factory-mounted supervisory switches shall be housed within the switch box housing; a S.P.S.T. switch having a rating of 15A @ 125 VAC, 1/2A @ 125 VDC, and a S.P.D.T. switch having a rating of 11A @ 125 VAC, 1 A @ 28 VDC. All lead wires for external connections shall be 18 AWG, exiting the switch box housing through a single hole suitable for ½" conduit fittings. The Butterfly Control Valve shall be listed for 300 psi (20.7 bar) working pressure with a maximum working temperature of 250°F.

b. The grooved water supply control valve shall be a Reliable Model BFG 300 Butterfly Valve. Refer to Reliable Bulletin 831 for associated information.

2. Compressed Air Supply

a. Supervisory air supply shall be provided by an integral automatic tank-mounted air compressor sized for the capacity (volume) of the single interlock preaction system piping and be capable of restoring normal air pressure in the system within 30 minutes. Single interlock preaction system shall only require between 10 and 28 psi (0.7 to 1,9 bar) supervisory pressure for proper setting of the low-pressure pneumatic actuator in accordance with the manufacturer's instructions. Tank mounted compressor shall be a motor mounted, oil-less, piston compressor, including gauge, regulating pressure switch, check valve, drain valve, and safety relief valve. Single-phase motor shall have internal thermal protection. Air supply shall be equipped with an automatic pressure maintenance device capable of maintaining a constant system pressure regardless of pressure fluctuations in the compressed air source, or system piping.

3. Low Air Supervisory Pressure Switch

a. Supervisory air pressure within the preaction system piping shall be monitored using a low air supervisory pressure switch. Supervisory air pressure switch shall be cULus Listed and FM Approved, field-adjustable, bellows-activated type pressure switch compatible with system devices. The pressure switch shall have the capability to provide alarm response between 10 and 60 psi but shall be factory wired to respond at 18 psi on decreasing pressure and 28 psi on increasing pressure. The pressure switch shall have a field replaceable SPDT (Form C) contact(s) rated at 10.0 amp @ 125/250 VAC and 2.5 amp @ 6/12/24 VDC. Switch shall be provided with a ½" NPT male glass-reinforced nylon pressure connection and shall have a maximum pressure rating of 250 psi. Two conduit connection holes shall be provided in the mounting plate to accept standard ½" conduit fittings. The switch enclosure shall be weatherproof and carry a UL 4x/NEMA 4 rating when used with proper electrical fittings and conduit. The cover shall have the wiring diagram cast into it and incorporate tamper-resistant screws. Low air supervisory pressure switch shall be a Potter Electric PS 25-2 pressure switch.

4. Waterflow Pressure Switch

a. An alarm pressure switch installed on the alarm line trim of the deluge valve shall provide a water flow alarm. It shall be cULus Listed and FM Approved. The switch shall be a field-adjustable, bellows-activated type pressure switch compatible with system devices. The pressure switch shall have the capability to provide alarm response between 4 and 20 psi but shall be factory adjusted to respond at 4 to 8 psi on rising pressure. The pressure switch shall have a field replaceable SPDT (Form C) contact(s) rated at 10.0 amp @ 125/250 VAC and 2.5 amp @ 6/12/24 VDC. Switch shall be provided with a ½" NPT male glass-reinforced nylon pressure connection and shall have a maximum pressure rating of 250 psi. Two conduit connection holes shall be provided in the mounting plate to accept standard ½" conduit fittings. The switch enclosure shall be weatherproof and carry a UL 4x/NEMA 4 rating when used with proper electrical fittings and

conduit. The cover shall have the wiring diagram cast into it and incorporate tamper-resistant screws. Alarm pressure switch shall be a Potter Electric PS 10-2 pressure switch.

5. Pressure Maintenance Device

a. An automatic, regulating type of pressure maintenance shall be used with pneumatic supplies provided by a source of compressed air or nitrogen cylinders equipped with a regulating device. The pressure maintenance device shall be cULus Listed and FM Approved capable of maintaining a constant system pressure, automatically, regardless of any pressure fluctuations from the compressed air of nitrogen source. The device shall be constructed of galvanized trim and brass parts, consisting of ¼" supply bypass piping and a ¾" section of piping for rapid restoration of system pneumatic pressure. The ¼" bypass piping shall contain shutoff valves, a strainer, a check valve and a field adjustable pressure regulator. The pressure regulator shall have an adjustable outlet pressure range of 5 to 75 psi (.34 to 5,2 bar). The ¾" section of piping shall contain a ball valve for rapid restoration of system pressure and associated trim for connection to the dry pipe valve system air supply line. The assembly shall have a working pressure rating of 175 psi (12,1 bar). The pressure maintenance device shall be the Reliable Model A.

6. Detection System

a. To initiate actuation of the preaction system deluge valve, a detection system shall be provided. The detection devices installed shall be compatible with the preaction system releasing control panel. **[**Insert applicable product specification**]**.

7. Releasing Control Panel

a. The releasing control panel shall be a Potter PFC 4410 RC field programmable releasing panel having a 32-character backlit LCD display. All diagnostic and alarm event information shall be viewable in text form on this display. All operational features of the control panel shall be field programmable using menu driven selections on the alpha-numeric display and on-board controls. No special programmer will be required and jumpers or switches to configure operational features shall not be permitted. The control panel shall be equipped with 15 preset programs for water delivery built into the panel memory, along with custom program capability. The control panel shall sound a local audible for trouble and supervisory conditions. Four separate integral SPDT relay contacts for alarm, trouble, supervisory, and waterflow conditions shall be provided for connection to external auxiliary equipment or for remote annunciation. The releasing panel enclosure shall contain two 12 VDC, 12 amp-hour stand-by batteries capable of operating the system for up to 90 hours of battery back-up. It shall be housed in an 18-gauge steel enclosure having a hinged door with a key lock and recessed mounted within the cabinet door. The releasing control panel shall include a fully supervised integral power supply/battery charger capable of providing 200 mA to the auxiliary power circuit and 2.5 A to all releasing and indicating circuit appliances combined. All programming functions shall be password protected. The releasing control panel shall have four fully supervised Class A initiating circuits capable of supporting the operation of the manufacturer's specified number

of compatible detectors on one **[**two**]** circuit(s), waterflow, and dedicated low air. It shall also include one fully supervised Class A supervisory circuit for the monitoring of the system control valve. Four fully supervised Class B output circuits shall be provided for notification appliances and for the solenoid releasing circuit. The releasing circuit shall be supervised and shall be programmable for cross-zoning operation when required.

8. RCDS-1 Releasing Circuit Disable Switch

a. A single Potter Electric RCDS-1 Releasing Circuit Disable Switch which complies with the requirements of NFPA 72 shall be installed within the enclosure. The switch shall have the capability to disconnect the release circuit in place of a software controlled disconnect and shall create a supervisory condition on the release control panel when activated.

2.7 WATERFLOW ALARMS

A. Flow of water equal to or greater than that from a single automatic sprinkler (smallest orifice in system) shall result in an audible alarm on the premises within 5 minutes after such flow begins and until such flow stops.

B. The alarm apparatus shall consist of a listed alarm check valve or other listed waterflow-indicating device with the necessary attachments to give an alarm.

C. The apparatus for a dry pipe system shall consist of alarm attachments to the dry pipe valve.

2.8 FIRE DEPARTMENT CONNECTION

A. Existing system fire department connection shall be utilized to serve the pre-action riser.

B. Cast brass body, brass clapper inlets, brass plate, adapters and plugs with chain.

C. Include inlets with threads according to NFPA 1963 and local fire department requirements.

D. Provide escutcheon plate and labeling per NFPA 13.

2.9 BACKFLOW PREVENTION

A. Provide in accordance with manufacturers recommendations.

B. Provide in accordance with NFPA 13. Provide a permanent means of testing the backflow preventer in accordance with NFPA 13 requirements.

C. Backflow preventer types; provide as required by the local water district.

1. Double check: Watts Series 709DCDA or 774DCDA detector check fire service applications; or approved equal.
2. RPZ: Watts Series 909RPDA or 994RPDA, detector check fire service applications; or approved equal. Provide proper drainage.

PART 3 - EXECUTION

3.1 PREPARATION

A. The nature of the work requires coordination with other trades. Shop fabrication shall be done at the Contractor's risk. Relocation of piping and components to avoid obstructions may be necessary. Relocation, if required, shall be done at the Contractor's expense. The installation shall be performed in a workmanlike manner as determined by the Owner's Representative and in accordance with the Contract Documents, manufacturer's printed installation instructions, and submitted and Owner's Representative reviewed drawings.

3.2 SPRINKLER APPLICATIONS

A. General: Use sprinklers according to the following applications:

1. Rooms/spaces without Ceilings: Upright sprinklers.
2. All occupied rooms with Finished Ceilings: Recessed Pendent.
3. Provide sprinkler guards for heads in mechanical and storage spaces, less than 8 ft. above finished floor subject to mechanical damage.
4. Low ceilings (under 8 feet): Concealed
5. Electrical or Data Rooms with finished ceilings: Concealed
6. Electrical or Data Rooms without ceilings: Provide guard
7. Attics: attic sprinklers.
8. Wall Mounting: Sidewall sprinklers.
9. Spaces Subject to Freezing: Upright; pendent, dry-type; and sidewall, dry-type sprinklers.
10. Special Applications: Use extended-coverage, flow-control, and quick-response sprinklers where indicated.

B. Finishes

a. Unfinished spaces not exposed to view: rough bronze.
b. Recessed Sprinklers: White
c. Provide escutcheons with matching color for finished spaces.

3.3 SYSTEM INSTALLATIONS

A. Earthquake Protection: Provide piping according to NFPA 13 to protect from earthquake damage.

B. Water supply control valves shall be electrically supervised and mechanically locked for proper position. Water flow and supervisory circuits shall be in accordance with the requirements of electrical specifications. Electric connections to sprinkler system shall be by Division 26. Furnish wiring diagrams for all equipment.

C. Fire Department Connection: A system fire department connection shall be provided on the system riser in accordance with N.F.P.A. 13. Fire department connection shall be installed in an area accessible for the first response unit. Coordinate with local fire department.

D. A sprinkler head wrench of each style and model installed shall be provided to the owner at the completion of the project. A representative sampling of each sprinkler head style and model shall be provided to the owner and housed in a sprinkler head cabinet at or near the sprinkler riser. The number of sprinkler heads provided to the owner shall be in accordance with NFPA 13.

E. Provide "Inspector's Test Connections" in sprinkler system piping, complete with shutoff valve, sized and located according to NFPA 13

F. Provide a vent near a high point in the system to allow air to be removed from that portion of the system.

3.4 SPRINKLER INSTALLATION

A. Provide sprinklers in suspended ceilings in center of 2 X 2 ceiling tiles (not required for 2 X 4).

B. Do not install pendent or sidewall, wet-type sprinklers in areas subject to freezing. Use dry-type sprinklers with water supply from heated space per NFPA 13.

C. Provide sprinkler piping with drains for complete system drainage.

D. Hangers and Supports: Comply with NFPA 13 for hanger materials.

3.5 LABELING AND IDENTIFICATION

A. Provide labeling and pipe markers on equipment and piping according to requirements in NFPA 13.

3.6 FIELD QUALITY CONTROL

A. Flush, test, and inspect sprinkler piping according to NFPA 13, "System Acceptance" Chapter.

B. Verify that specialty valves, trim, fittings, controls, and accessories are installed and operate correctly.

C. Verify that specified tests of piping are complete.

D. Verify that damaged sprinklers and sprinklers with paint or coating not specified are replaced with new, correct type.

E. Verify that sprinklers are correct types, have correct finishes and temperature ratings, and have guards as required for each application.

F. Verify that potable-water supplies have correct types of backflow preventers.

G. Verify that fire department connections have same type compatible with local fire department equipment.

H. Replace piping system components that do not pass test procedures and retest to demonstrate compliance. Repeat procedure until satisfactory results are obtained.

I. Energize circuits to electrical equipment and devices.

J. Coordinate with fire alarm tests. Operate as required.

K. Preaction Testing: Test per manufacturer's instructions.

1. Water supply.
2. Alarm line.
3. Ball drip valve.
4. System pneumatic pressure.
5. Releasing device.
6. Testing alarms.
7. Operational tests.

3.7 CLEANING

A. Clean dirt and debris from sprinklers.

B. Remove and replace sprinklers having paint other than factory finish.

C. Clean and disinfect fire-suppression water-service piping as follows:

1. Purge new piping systems and parts of existing systems that have been altered, extended, or repaired before use.
2. Use purging and disinfecting procedure prescribed by authorities having jurisdiction or, if method is not prescribed by authorities having jurisdiction, use procedure described in NFPA 24 for flushing of piping. Flush piping system with clean, potable water until dirty water does not appear at points of outlet.
3. Use purging and disinfecting procedure prescribed by authorities having jurisdiction or, if method is not prescribed by authorities having jurisdiction, use procedure described in AWWA C651.
4. Prepare reports.

3.8 PAINTING

A. Painting of fire-suppression systems, equipment, and components is specified in Division 9.

B. Damage and Touchup: Repair marred and damaged factory-painted finishes with materials and procedures to match original factory finish.

3.9 PROTECTION

A. Protect sprinklers from damage until Substantial Completion.

END OF SECTION

SECTION 22 11 16 - DOMESTIC WATER PIPING

PART 1 - GENERAL

1.1 RELATED DOCUMENTS

A. Drawings and general provisions of the Contract, including General and Supplementary Conditions and Division 1 Specification Sections, apply to this Section.

B. Related Sections include the following:

1. Division 22 Section: “Common Work Results”

1.2 SUMMARY

A. This Section includes domestic water piping and specialties.

1.3 ACTION SUBMITTALS

A. Product Data: For domestic water piping, fittings, valves and accessories.

1.4 QUALITY ASSURANCE

A. Piping materials shall bear label, stamp, or other markings of specified testing agency.

B. Comply with the local building and plumbing codes.

C. Qualify brazing processes for copper and copper alloy pipe and tube according to ANSI/AWS C3.4.

D. Comply with NFPA 24, "Installation of Private Fire Service Mains and Their Appurtenances" and NSF 61, "Drinking Water System Components-Health Effects; Sections 1 through 9," for combined fire-protection and domestic water service piping to building.

E. Potable-water piping and components shall comply with NSF 14 and NSF 61 Annex G. Plastic piping components shall be marked with "NSF-pw."

F. Comply with NSF 372 for low lead.

PART 2 - PRODUCTS

2.1 DUCTILE-IRON PIPING

A. Materials shall be approved by the local water utility. Ductile iron pipe shall meet requirements of AWWA Standard C-151 (latest revision) and be cement lined and seal coated to meet AWWA Standard C-104 (latest revision). Joints shall meet requirements of AWWA C-111 (latest revision). Interior seal coated, bituminous paint oil cut, emulsion not acceptable, thickness minimum of 2 mils dry film thickness. Exterior bituminous coated with minimum of 2 mils dry film thickness. Class 52 wall thickness, 4-inch diameter through 12-inch diameter inclusive. Mechanical joint pipe to be furnished with gland, gaskets and Cor-Ten bolts and nuts.

B. Ductile Iron Fittings Including Bends, Reducers, Off-Sets, Tees And Sleeves: Material shall be ASTM A536 latest, grade 70-50-05, in accordance with AWWA C153 (latest revision). Fittings shall be cement lined AWWA C104 (latest revision) or fusion bonded epoxy coated with a 5 mil nominal thickness per AWWA C550 and C116. Interior seal coated AWWA C104 with minimum of 4 mils dry film thickness. Exterior bituminous coated, 4 mils minimum dry film thickness or fusion bonded epoxy coated with a 5 mil nominal thickness per AWWA C550 and C116. Mechanical joint with accessories furnished: D.I. glands, gaskets, Cor-Ten T-bolts and nuts. Pressure Rating: Class 350 pressure rating in accordance with AWWA C153.

2.2 COPPER TUBING

A. Hard Copper Tube: ASTM B 88, Types L, water tube, drawn temper.

1. Copper Pressure Fittings: ASME B16.18, cast-copper-alloy or ASME B16.22, wrought-copper, solder-joint fittings. Furnish wrought-copper fittings if indicated.
2. Bronze Flanges: ASME B16.24, Class 150, with solder-joint end. Furnish Class 300 flanges if required to match piping.
3. Copper Unions: MSS SP-123, cast-copper-alloy, hexagonal-stock body, with ball-and-socket, metal-to-metal seating surfaces and solder-joint or threaded ends.
4. Copper-Tubing, Keyed Couplings: Copper-tube dimensions and design similar to AWWA C606. Include ferrous housing sections, gasket suitable for hot water, and bolts and nuts.

B. Mechanically formed copper tee connections are not acceptable.

C. Viega Pro Press Fittings: Copper and copper alloy press fittings shall conform to material requirements of ASME B16.18 or ASME B16.22 and performance criteria of IAPMO PS 117. Sealing elements for press fittings shall be EPDM. Sealing elements shall be factory installed or an alternative supplied by fitting manufacturer. Press ends shall have SC (Smart Connect) feature design (leakage path). The Smart Connect Feature shall assure leakage of liquids and/or gases from inside the system past the sealing element of an un-pressed connection. The function of this feature is to provide the installer quick and easy identification of connections which have not been pressed prior to putting the system into operation.

2.3 PEX PIPE AND FITTINGS

A. Manufacturers: Subject to compliance with requirements, provide products by one of the following. PEX-a manufacturer system warranty shall cover tubing for a duration of 30 years from the date of installation.

1. Uponor AquaPEX (Basis of Design)
2. Rehau
3. Watts Radiant
4. Viega

B. Manufacturer's Warranty for Piping and Fittings: PEX-a manufacturer system warranty shall cover piping and fittings for a duration of 25 years from the date of installation. Piping system warranty shall apply to potable water distribution and water service systems constructed of pipe and fitting products sourced from the same manufacturer.

C. PEX-a (Engel-Method Crosslinked Polyethylene) Piping: ASTM F 876 and F877 (CAN/CSA-B137.5).

D. PEX-a Fittings: elbows, adapters, couplings, plugs, tees and multi-port tees (1/2 inch through 3 inch nominal pipe size): ASTM F1960 cold-expansion fitting manufactured from the following material types:

1. Lead-free (LF) Brass.
2. 20% glass-filled polysulfone as specified in ASTM D 6394.
3. Unreinforced polysulfone (group 01, class 1, grade 2) as specified in ASTM D 6394.
4. Polyphenylsulfone (group 03, class 1, grade 2) as specified in ASTM D 6394.
5. Blend of polyphenylsulfone (55-80%) and unreinforced polysulfone (rem.) as specified in ASTM D 6394.
6. Reinforcing cold-expansion rings shall be manufactured from the same source as PEX-a piping manufacturer and marked "F1960".

E. Multi-Port Tees: Multiple-outlet fitting complying with ASTM F 877 (CAN/CSA B137.5); with ASTM F 1960 inlets and outlets.

F. Manifolds: Multiple-outlet assembly complying with ASTM F 877 (CAN/CSA B137.5); with ASTM F 1960 outlets.

G. PEX Transition Fittings: Provide fittings from the same manufacturer of the piping.

2.4 VALVES

A. Ball Valves

1. The valve body and adapter shall be constructed using Lead Free brass. Lead Free ball valves shall comply with state codes and standards, where applicable, requiring reduced lead content.
2. ½” to 2” ball valves: 2-piece full port lead-free brass ball valves: The valve must have a blowout proof pressure retaining 316 stainless steel stem, 316 stainless steel ball, virgin PTFE seats, seals, stem packing seal and thrust washer. Valve must have adjustable

packing. Valves with O-ring stem seal only are not acceptable. Pressure rating no less than 600psi WOG non-shock, 150psi WSP. Valve shall be manufactured to the MSS-SP-110 standard and shall be a Watts Series LFB6080 (threaded) or LFB6081 (solder).

3. Valve sizes 2-1⁄2" to 4" threaded, shall be rated to 400psi WOG non-shock and 125psi WSP. Valve sizes 2-1⁄2" to 3" solder shall be rated to 400psi WOG non-shock and 125psi WSP. Valve shall be a Watts Series LFFBV-3C (threaded) or LFFBVS-3C (solder).
4. Provide locking handle where indicated.
5. Comply with MSS SP-110.

B. Swing check valves:

1. Construct pressure containing parts of Valves as follows: Bronze Valves: 125 or 150 psi: ANSI/ASTM B 62; Iron Body Valves: ANSI/ASTM A-126, Grade B.
2. Check valves shall be lead free.
3. Comply with the following standards for design, workmanship, material and testing: Bronze Valves: MSS SP – 80; Cast Iron Valves: MSS SP – 71
4. Construct valves of pressure casting free of any impregnating materials. Construct disc and hanger as one piece. Support hanger pins by removable side plug.
5. Threaded Ends 2" and Smaller: Class 125, bronze body, screwed cap, Teflon disc.
6. Soldered Ends 2" and Smaller: Class 125, bronze body, screwed cap, Teflon disc.
7. Flanged Ends 2-1/2" and Larger: Class 125, iron body, bronze mounted, horizontal swing, cast-iron disc.

2.5 BACKFLOW PREVENTERS

A. Manufacturers:

1. Zurn Industries, Inc.; Wilkins Div.
2. Cla-Val Co.
3. Apollo
4. Febco Backflow Preventers.
5. Watts Industries, Inc.
6. Ames

B. General: ASSE standard, backflow preventers.

1. NPS 2 and Smaller: Bronze body with threaded ends.
2. NPS 2-1/2 and Larger: Bronze, cast-iron, steel, or stainless-steel body with flanged ends.
3. Interior Components: Corrosion-resistant materials. AWWA C550 or FDA-approved
4. Exterior Finish: manufacturer’s standard.
5. Provide ball valves on inlet and outlet
6. Provide strainer on inlet.
7. All components shall be lead free.

C. Atmospheric-Type Vacuum Breakers: ASSE 1001, with floating disc and atmospheric vent.

D. Double-Check Backflow Prevention Assemblies:

1. Wilkins Series 950XLT2 (2” and smaller)
2. Wilkins Series 350ASTOSY (2-1/2” and larger)
3. ASSE 1015, suitable for continuous pressure application. Pressure Loss: 5 psig maximum, through middle 1/3 of flow range.

E. Reduced-Pressure-Principle Backflow Preventers: ASSE 1013, suitable for continuous pressure application. Pressure Loss: 12 psig maximum, through middle 1/3 of flow range.

1. Provide air gap fitting.
2. Wilkins Series 975XL2 (2” and smaller)
3. Wilkins Series 375ASTOSY (2-1/2” and larger)

2.6 STRAINERS FOR DOMESTIC WATER PIPING

A. 3” and smaller: Y-type strainer shall be domestically manufactured, and conform to MIL-S-16293, and be ANSI 3rd party certified to comply with states' lead plumbing law 0.25% maximum weighted average lead content requirement. The main body shall be low lead bronze (ASTM B 584), the access cover shall be yellow brass (ASTM B 16) or cast bronze (ASTM B 584), the strainer screen shall be 300 series stainless steel, 20 mesh. Screens shall be accessible for cleaning without removing the device from the line. The “Y” type strainer shall be a WILKINS Model YBXL. Drain: Pipe plug.

B. 4” and larger: The lead-free cast iron “Y” type strainer shall be in compliance with MIL-S-16293F Type 2. The main body and access cover shall be cast iron (ASTM A 126 Class B) and coated with an FDA approved epoxy coating inside and out. The integral strainer screen shall be accessible for cleaning without removing the device from the line. The Cast Iron “Y” type strainer shall be a WILKINS Model FSC-DOM. Pressure/temperature: 200 psi @ 150°F WOG; End connections: Flanged Class 125 lb. Drain: Factory-installed, hose-end drain valve.

2.7 WATER HAMMER ARRESTORS

A. Manufacturers:

1. Zurn
2. Oatey
3. Precision Plumbing Products, Inc.
4. Sioux Chief Manufacturing Company, Inc.

B. Lead-free 0.25% maximum weighted average lead content requirement, consist of a copper body with a low lead brass hexagonal male pipe threaded inlet, an acetal, polycarbonate or low lead brass piston with Buna Nitrile or EPDM O-rings and lead-free solder; ASSE® Listed 1010, ANSI A112.26.1. The device shall be pre-charged and sealed at the factory. The Water Hammer Arrester shall be a Zurn-Wilkins Model 1260XL.

2.8 DRAIN VALVES

A. Ball-Valve-Type, Hose-End Drain Valves:

1. Standard: MSS SP-110 for standard-port, two-piece ball valves.
2. Pressure Rating: 400-psig minimum CWP.
3. Size: NPS 3/4.
4. Body: Copper alloy.
5. Ball: Chrome-plated brass.
6. Seats and Seals: Replaceable.
7. Handle: Vinyl-covered steel.
8. Inlet: match piping.
9. Outlet: Threaded, short nipple with garden-hose thread complying with ASME B1.20.7 and cap with brass chain.

PART 3 - EXECUTION

3.1 SITE INTERFACE

A. Provide piping from inside face of exterior wall to a distance of approximately 5 feet outside of building. Provide flanged and anchored connection to interior piping.

B. Refer to Division 31 & 33 for excavating, trenching, and backfilling.

3.2 PIPING APPLICATIONS

A. Pressure Rating: Provide components having a pressure rating equal to or greater than the system operating pressure.

B. Mechanically formed tee-branch outlets and brazed joints shall not be used.

C. Underground Domestic Water Service Piping: Use any of the following piping materials for each size range. Coordinate with the local utility, local requirements supersede these specifications.

1. NPS 2 and Smaller: PE pipe; insert fittings for PE pipe; and banded or crimp-ring joints.
2. NPS 2-1/2 and larger: ductile-iron pipe; mechanical- or push-on-joint, ductile-iron fittings; and restrained, gasketed joints.

D. Aboveground Domestic Water or Non-Potable Water Piping: Use the following piping materials for each size range:

1. NPS 3 and Smaller: Type L copper.
2. NPS 4 to NPS 6: Type L copper or stainless steel.

3.3 VALVES

A. Drawings indicate valve types to be used. Where specific valve types are not indicated, the following requirements apply:

1. Shutoff Duty: Use bronze ball valves for piping NPS 3 and smaller.
2. Throttling Duty: Use bronze ball or globe valves for piping NPS 3 and smaller.
3. Hot-Water-Piping, Balancing Duty.
4. Drain Duty: Hose-end drain valves.

B. Provide sectional valve close to water main on each branch and riser serving plumbing fixtures or equipment.

C. Provide shutoff valve on each water supply to equipment and specialties. Provide shutoff valve on each water supply to plumbing fixtures without supply stops.

D. Provide shutoff valve, hose-end drain valve, strainer, pressure gage, and test tee with valve, inside building at each domestic water service.

3.4 PIPING & SPECIALTIES INSTALLATION

A. Refer to Division 23 Section "Common Work Results" for installation of:

1. Basic piping requirements.
2. Joint construction requirements.
3. Hanger, support, and anchor devices.
4. Firestopping
5. Sleeves and Escutcheons
6. Wall penetration system at each service pipe penetration through foundation wall.
7. Dielectric fittings
8. Valves
9. Mechanical Identification

B. Provide underground ductile-iron piping according to AWWA C600 and NFPA 24.

C. Provide aboveground domestic water piping level and plumb, free of sags, kinks, and bends.

D. Swing Connections for Expansion: Connect hot water risers and branch connections to mains with at least five pipe fittings, including tee in main.

E. Provide air vents at piping high points. Include ball valve in inlet.

F. Provide water-pressure regulators for municipal water supplies that exceed 80 psi. Set outlet pressure at 80 psig maximum.

G. Provide pressure regulators with inlet strainer and shutoff valve, outlet shutoff valve and balance valve bypass. Provide pressure gages on inlet and outlet. Set field-adjustable pressure set points of water pressure-reducing valves.

H. Water hammer arrestors shall be installed at solenoid valves, flush valve water closets, as shown on the plans, and as recommended by Plumbing & Drainage Institute Standard PDI-WH-201. Locate units at the end of branch lines, between the last two fixtures served. Size units based on fixture unit total of branch. All branch pipes serving flush valve water closets shall have water hammer arrestors.

I. Install piping with no dead legs, all sections shall see water flow.

3.5 FIELD QUALITY CONTROL

A. Provide and test all systems per local code requirements.

B. Perform the following steps before operation:

1. Fill water piping. Check components to determine that they are not air bound and that piping is full of water.
2. Close drain valves, hydrants, and hose bibbs.
3. Open shutoff valves to fully open position.
4. Open throttling valves to proper setting.
5. Remove plugs used during testing of piping and plugs used for temporary sealing of piping during installation.
6. Remove and clean strainer screens. Close drain valves and replace drain plugs.

C. Check plumbing equipment and verify proper settings, adjustments, and operation. Do not operate water heaters before filling with water.

D. Check plumbing specialties and verify proper settings, adjustments, and operation.

E. Inspect domestic water piping as follows:

1. Do not enclose, cover, or put piping into operation until it is inspected and approved by authorities having jurisdiction.
2. During installation, notify authorities having jurisdiction at least 24 hours before inspection must be made. Perform tests specified below in presence of authorities having jurisdiction:

    a. Roughing-in Inspection: Arrange for inspection of piping before concealing or closing-in after roughing-in and before setting fixtures.
    b. Final Inspection: Arrange for final inspection by authorities having jurisdiction to observe tests specified below and to ensure compliance with requirements.

3. Reinspection: If authorities having jurisdiction find that piping will not pass test or inspection, make required corrections and arrange for reinspection.
4. Reports: Prepare inspection reports and have them signed by authorities having jurisdiction.

F. Test domestic water piping as follows:

1. Test for leaks and defects in new piping and parts of existing piping that have been altered, extended, or repaired. If testing is performed in segments, submit separate report for each test, complete with diagram of portion of piping tested.
2. Leave uncovered and unconcealed new, altered, extended, or replaced domestic water piping until it has been tested and approved. Expose work that was covered or concealed before it was tested.
3. Cap and subject piping to static water pressure of 50 psig above operating pressure, without exceeding pressure rating of piping system materials. Isolate test source and allow to stand for four hours. Leaks and loss in test pressure constitute defects that must be repaired.
4. Repair leaks and defects with new materials and retest piping or portion thereof until satisfactory results are obtained.
5. Prepare reports for tests and required corrective action.

G. Test plumbing specialties according to authorities having jurisdiction and the device's reference standard. Domestic water piping specialties will be considered defective if they do not pass tests and inspections. Prepare test and inspection reports.

H. Adjust each backflow preventer in accordance with manufacturer's written instructions, authorities having jurisdiction and the device's reference standard.

3.6 CLEANING

A. Clean interior of domestic water piping system. Remove dirt and debris as work progresses. Clean and disinfect domestic water piping per code requirements or administrative authority requirements. Sample procedure as indicated:

1. Purge new piping and parts of existing domestic water piping that have been altered, extended, or repaired before using.
2. Use purging and disinfecting procedures prescribed by authorities having jurisdiction or, if methods are not prescribed, procedures described in either AWWA C651 or AWWA C652 or as described below:

   a. Flush piping system with clean, potable water until dirty water does not appear at outlets.
   b. Fill and isolate system according to either of the following: Fill system or part thereof with water/chlorine solution with at least 50 ppm of chlorine. Isolate with valves and allow to stand for 24 hours. Fill system or part thereof with water/chlorine solution with at least 200 ppm of chlorine. Isolate and allow to stand for three hours.
   c. Flush system with clean, potable water until no chlorine is in water coming from system after the standing time.
   d. Submit water samples in sterile bottles to authorities having jurisdiction. Repeat procedures if biological examination shows contamination.

B. Prepare and submit reports of purging and disinfecting activities.

END OF SECTION

SECTION 22 11 23 – FACILITY FUEL GAS PIPING

PART 1 - GENERAL

1.1 RELATED DOCUMENTS

A. Drawings and general provisions of the Contract, including General and Supplementary Conditions and Division 1 Specification Sections, apply to this Section.

B. Related Sections include the following:

1. Division 22 Section: “Common Work Results”

1.2 SUMMARY

A. This Section includes fuel gas piping, specialties, and accessories.

1.3 PROJECT CONDITIONS

A. Natural Gas System Pressure: Coordinate with gas supplier. Regulator shall be set at 14” WC.

1.4 SUBMITTALS

A. Product Data: For the following:

1. Corrugated, stainless-steel tubing systems. Include associated components.
2. Specialty valves
3. Pressure regulators.
4. Meters

B. Field Test Reports: Indicate and interpret test results for compliance with performance requirements.

C. Maintenance Data: For fuel gas specialties and accessories to include in maintenance manuals specified in Division 1.

D. Seismic Delegated-Design Submittal:

1. For piping and equipment indicated to comply with performance requirements and design criteria, including analysis data signed and sealed by the qualified professional engineer responsible for their preparation.

a. Determine seismic restraint sizes and locations.
b. Provide seismic restraints as scheduled or specified.
c. Provide calculations and materials if required for restraint of un-isolated equipment.

d. Provide installation instructions, drawings and trained field supervision to insure proper installation and performance.

2. Seismic restraints shall be designed in accordance with seismic force levels as detailed herein.

a. Applicable Code: IBC
b. Seismic Design Category: See structural plans.
c. Design Spectral Response at Short Periods (SDS): See structural plans.
d. Short Period Spectral Response Acceleration (SS): See structural plans.
e. Building Use Group or Occupancy Category: See structural plans.

1.5 CLOSEOUT SUBMITTALS

A. Operation and Maintenance Data

1.6 QUALITY ASSURANCE

A. All work shall be performed by fuel gas licensed technicians.

B. Installations of fuel gas must also comply with all other applicable statutes or rules of the State and all applicable ordinances, orders, rules, and regulations of local municipalities.

C. Electrical Components and Devices: Listed and labeled as defined in NFPA 70, Article 100, by testing agency acceptable to authorities having jurisdiction, and marked for intended use.

D. All work shall be per the local gas code.

E. FM Standard: Provide components listed in FM's "Fire Protection Approval Guide" if specified to be FM approved.

1.7 DELIVERY, STORAGE, AND HANDLING

A. Handling Flammable Liquids: Remove and legally dispose of liquids from drips in existing gas piping. Handle cautiously to avoid spillage and ignition. Notify fuel gas supplier. Handle flammable liquids used by Installer with proper precautions and do not leave on premises from end of one day to beginning of next day.

1.8 COORDINATION

A. Make arrangements with local utility for gas service to the Owner’s distribution system. Provide service to the building as required by the gas supplier. Coordinate all activities between the Owner and gas supplier. The installation of the gas service shall comply with the published gas supplier standards. Pay all utility company charges; include charges in the base bid.

B. Existing Utilities: Do not interrupt utilities serving facilities occupied by Owner or others unless permitted under the following conditions and then only after arranging to provide temporary utility services according to requirements indicated:

1. Notify Architect not less than two days in advance of proposed utility interruptions.
2. Do not proceed with utility interruptions without Architect's written permission.

PART 2 - PRODUCTS

2.1 MANUFACTURERS

A. Manufacturers: Subject to compliance with requirements, provide products by one of the following:

1. Corrugated, Stainless-Steel Tubing Systems:

   a. Omega Flex, Inc.
   b. Titeflex Corp.
   c. Tru-Flex Metal Hose Corp.
   d. Ward Manufacturing, Inc.

2. Valves:

   a. American Valve.
   b. Conbraco Industries, Inc.; Apollo Div.
   c. Crane Valves.
   d. Grinnell Corp.
   e. Honeywell, Inc.
   f. McDonald: A. Y. McDonald Mfg. Co.
   g. Milwaukee Valve Co., Inc.
   h. Nibco, Inc.
   i. Mueller Co.; Mueller Gas Products Div.
   j. Watts Industries, Inc.

3. Meters:

   a. American Meter Co.
   b. Badger Meter, Inc.; Utility Products Div.
   c. Equimeter, Inc.
   d. National Meter.
   e. Schlumberger Industries; Gas Div.

4. Pressure Regulators:

   a. American Meter Co.
   b. Equimeter, Inc.
   c. Fisher Controls International, Inc.
   d. Maxitrol Co.
   e. National Meter.
   f. Richards Industries, Inc.; Jordan Valve Div.
   g. Schlumberger Industries; Gas Div.

2.2 PIPES, TUBES, FITTINGS, AND JOINING MATERIALS

A. Steel Pipe: ASTM A 53/A 53M, black steel, Schedule 40, Type E or S, Grade B.

1. Malleable-Iron Threaded Fittings: ASME B16.3, Class 150, standard pattern.
2. Wrought-Steel Welding Fittings: ASTM A 234/A 234M for butt welding and socket welding.
3. Unions: ASME B16.39, Class 150, malleable iron with brass-to-iron seat, ground joint, and threaded ends.
4. Forged-Steel Flanges and Flanged Fittings: ASME B16.5, minimum Class 150, including bolts, nuts, and gaskets of the following material group, end connections, and facings:

    a. Material Group: 1.1.
    b. End Connections: Threaded or butt welding to match pipe.
    c. Lapped Face: Not permitted underground.
    d. Gasket Materials: ASME B16.20, metallic, flat, asbestos free, aluminum o-rings, and spiral-wound metal gaskets.
    e. Bolts and Nuts: ASME B18.2.1, carbon steel.

B. Viega, MegaPress G Fittings: ½-inch through 2-inch shall conform to ANSI LC4-2012 /CSA 6.32-2012 2nd Edition. MegaPress G fittings with zinc/nickel coating for use with IPS schedule 5 thru schedule 40 carbon steel, or galvanized pipe conforming to ASTM A53, ASTM A106, ASTM A135, or ASTM A795. Fittings shall have an HNBR sealing element, 420 stainless steel grip ring, 304 stainless steel separator ring, and Smart Connect (SC) Feature that guarantees detection of an un-pressed fitting during testing. Installation must be in accordance to manufacturer's instructions and specifications utilizing manufacturers approved tooling. All installers shall be trained by the manufacturer for proper installation.

C. PE Pipe: ASTM D 2513, SDR 11.

1. PE Fittings: ASTM D 2683, socket-fusion type or ASTM D 3261, butt-fusion type with dimensions matching PE pipe.
2. PE Transition Fittings: Factory-fabricated fittings with PE pipe complying with ASTM D 2513, SDR 11; and steel pipe complying with ASTM A 53/A 53M, black steel, Schedule 40, Type E or S, Grade B.
3. Anodeless Service-Line Risers: Factory fabricated and leak tested.

    a. Underground Portion: PE pipe complying with ASTM D 2513, SDR 11 inlet.
    b. Casing: Steel pipe complying with ASTM A 53/A 53M, Schedule 40, black steel, Type E or S, Grade B, with corrosion-protective coating covering. Vent casing aboveground.
    c. Aboveground Portion: PE transition fitting.
    d. Outlet shall be threaded or flanged or suitable for welded connection.
    e. Tracer wire connection.
    f. Ultraviolet shield.
    g. Stake supports with factory finish to match steel pipe casing or carrier pipe.

D. Corrugated, Stainless-Steel Tubing: Comply with ANSI/IAS LC 1.

1. Manufacturers: Subject to compliance with requirements, provide products by one of the following:

   a. OmegaFlex, Inc.
   b. Parker Hannifin Corporation; Parflex Division.
   c. Titeflex.
   d. Tru-Flex Metal Hose Corp.

2. Tubing: ASTM A 240/A 240M, corrugated, Series 300 stainless steel.
3. Coating: PE with flame retardant. Surface-Burning Characteristics: As determined by testing identical products according to ASTM E 84 by a qualified testing agency. Identify products with appropriate markings of applicable testing agency. Flame-Spread Index: 25 or less. Smoke-Developed Index: 50 or less.
4. Fittings: Copper-alloy mechanical fittings with ends made to fit and listed for use with corrugated stainless-steel tubing and capable of metal-to-metal seal without gaskets. Include brazing socket or threaded ends complying with ASME B1.20.1.
5. Striker Plates: Steel, designed to protect tubing from penetrations.
6. Manifolds: Malleable iron or steel with factory-applied protective coating. Threaded connections shall comply with ASME B1.20.1 for pipe inlet and corrugated tubing outlets.
7. Operating-Pressure Rating: 5 psig.

E. Transition Fittings: Type, material, and end connections to match piping being joined.

F. Common Joining Materials: Refer to Division 23 Section "Common Work Results for HVAC" for joining materials not in this Section.

2.3 SPECIALTY VALVES

A. Valves, NPS 2 and Smaller: Threaded ends according to ASME B1.20.1 for pipe threads.

B. Valves, NPS 2-1/2 and Larger: Flanged ends according to ASME B16.5 for steel flanges.

C. Appliance Connector Valves: ANSI Z21.15 and IAS listed.

D. Gas Stops: Bronze body with AGA stamp, plug type with bronze plug and flat or square head, ball type with chrome-plated brass ball and lever handle, or butterfly valve with stainless-steel disc and fluorocarbon elastomer seal and lever handle; 2-psig minimum pressure rating.

E. Gas Valves, NPS 2 and Smaller: ASME B16.33 and IAS-listed bronze body and 125-psig pressure rating. Tamperproof Feature: Include design for locking.

F. Plug Valves, NPS 2-1/2 and Larger: ASME B16.38 and MSS SP-78 cast-iron, lubricated plug valves, with 125-psig pressure rating. Tamperproof Feature: Include design for locking.

G. General-Duty Valves, NPS 2-1/2 and Larger: ASME B16.38, cast-iron body, suitable for fuel gas service, with "WOG" indicated on valve body, and 125-psig pressure rating. Gate Valves: MSS SP-70, OS&Y type with solid wedge. Butterfly Valves: MSS SP-67, lug type with lever handle.

2.4 NATURAL GAS SERVICE METER AND PRESSURE REGULATOR

A. Gas Service Meter: Provided by gas supplier. Coordinate requirements and pay all fees.

2.5 PIPING SPECIALTIES

A. Appliance Flexible Connectors:

1. Indoor, Fixed-Appliance Flexible Connectors: Comply with ANSI Z21.24.
2. Indoor, Movable-Appliance Flexible Connectors: Comply with ANSI Z21.69.
3. Outdoor, Appliance Flexible Connectors: Comply with ANSI Z21.75.
4. Corrugated stainless-steel tubing with polymer coating.
5. Operating-Pressure Rating: 0.5 psig.
6. End Fittings: Zinc-coated steel.
7. Threaded Ends: Comply with ASME B1.20.1.
8. Maximum Length: 72 inches

B. Y-Pattern Strainers:

1. Body: ASTM A 126, Class B, cast iron with bolted cover and bottom drain connection.
2. End Connections: Threaded ends for NPS 2 and smaller; flanged ends for NPS 2-1/2 and larger.
3. Strainer Screen: 40-mesh startup strainer, and perforated stainless-steel basket with 50 percent free area.
4. CWP Rating: 125 psig.

C. Weatherproof Vent Cap: Cast- or malleable-iron increaser fitting with corrosion-resistant wire screen, with free area at least equal to cross-sectional area of connecting pipe and threaded-end connection.

D. Pressure gages shall conform to ASME B40.100, Type I, Class 1. Pressure-gage size shall be 3-1/2-inch nominal diameter. Case shall be corrosion-resistant steel conforming to any of the AISI 300 series of ASTM A 666, with a No. 4 standard commercial polish or better. All gages shall be equipped with adjustable red marking pointer and damper screw adjustment in inlet connection.

2.6 PRESSURE REGULATORS

A. Provide service, line, and appliance pressure regulators as indicated and as required by code. Regulators may include vent limiting device, instead of vent connection to outside, if approved by authorities having jurisdiction. Provide venting as required by code.

B. Line Pressure Regulators: ANSI Z21.80 with 10-psig inlet pressure rating, unless otherwise indicated.

C. Appliance Pressure Regulators: ANSI Z21.18.

D. Pressure Regulator Vents: Factory- or field-installed, corrosion-resistant screen in opening if not connected to vent piping.

2.7 SEISMIC RESTRAINTS

A. Seismic-restraint devices shall have horizontal and vertical load testing and analysis performed according to OSHPD and shall bear anchorage preapproval "R" number, from OSHPD or another agency acceptable to authorities having jurisdiction, showing maximum seismic-restraint ratings. Ratings based on independent testing are preferred to ratings based on calculations. If pre-approved ratings are not available, submittals based on independent testing are preferred. Calculations (including combining shear and tensile loads) to support seismic-restraint designs must be signed and sealed by a qualified professional engineer. Testing and calculations must include both shear and tensile loads and 1 test or analysis at 45 degrees to the weakest mode.

B. Seismic Cable Restraints shall consist of galvanized steel aircraft cables sized to resist seismic loads with a minimum safety factor of two and arranged to provide all-directional restraint.

C. Seismic solid braces shall consist of steel angles or channels to resist seismic loads with a minimum safety factor of 2 and arranged to provide all directional restraint.

D. Steel angles, sized to prevent buckling, shall be clamped to pipe or equipment rods utilizing a minimum of three ductile iron clamps at each restraint location when required.

E. Pipe clevis cross bolt braces are required in all restraint locations. They shall be special purpose preformed channels deep enough to be held in place by bolts passing over the cross bolt.

2.8 LABELING AND IDENTIFYING

A. Detectable Warning Tape: Acid- and alkali-resistant PE film warning tape manufactured for marking and identifying underground utilities, a minimum of 6 inches wide and 4 mils thick, continuously inscribed with a description of utility, with metallic core encased in a protective jacket for corrosion protection, detectable by metal detector when tape is buried up to 30 inches deep; colored yellow.

PART 3 - EXECUTION

3.1 EXAMINATION

A. Examine roughing-in for gas piping system to verify actual locations of piping connections before equipment installation.

B. Proceed with installation only after unsatisfactory conditions have been corrected.

3.2 EARTHWORK

A. Comply with requirements in Division 31 for excavating, trenching, and backfilling.

3.3 PREPARATION

A. Close equipment shutoff valves before turning off fuel gas to premises or section of piping. Perform leakage test as specified in "Field Quality Control" Article to determine that all equipment is turned off in affected piping section.

B. Inspect natural-gas piping according to NFPA 54 to determine that natural-gas utilization devices are turned off in piping section affected.

C. Comply with NFPA 54 requirements for prevention of accidental ignition.

3.4 NATURAL GAS SERVICE ENTRANCE PIPING

A. Extend fuel gas piping and connect to fuel gas distribution for service entrance to building.

B. Exterior fuel gas distribution system piping, service pressure regulator, and service meter will be provided by gas utility.

C. Provide dielectric fitting downstream from and adjacent to each service meter unless meter is supported from service-meter bar with integral dielectric fitting. Provide shutoff valve downstream from and adjacent to dielectric fitting.

D. Provide metal bollards to protect meter assemblies.

3.5 PIPING APPLICATIONS

A. Flanges, unions, transition, and special fittings with pressure ratings same as or higher than system pressure rating may be used in applications below, unless otherwise indicated.

B. Fuel Gas Piping: Use the following:

1. NPS 1 and Smaller: steel pipe, malleable-iron threaded fittings, and threaded joints. Option: Corrugated, stainless-steel tubing may be used for runouts at individual appliances.
2. NPS 1-1/4 to NPS 2: Steel pipe, malleable-iron threaded fittings, and threaded joints.
3. NPS 2-1/2 and Larger: Steel pipe, steel welding fittings, and welded joints.

C. Commercial Cooking Appliances. Commercial cooking appliances shall be connected in accordance with the connector manufacturer's installation instructions using a listed appliance connector complying with ANSI Z21.69, Connectors for Moveable Gas Appliances.

D. Provide containment conduits for gas piping below slabs, within building, in gastight conduits extending minimum of 4 inches outside building, and vented to atmosphere. Terminate vents with turned-down, reducing-elbow fittings with corrosion-resistant insect screens in large end. Prepare and paint outside of conduits with coal-tar, epoxy-polyamide paint according to SSPC-Paint 16.

E. Gas Service Piping at Meters and Regulators: Steel pipe, steel welding fittings, and welded joints.

F. Underground Fuel Gas Piping, outdoors: Provide underground, PE, gas piping according to ASTM D 2774. Install underground piping buried at least 36 inches below finished grade.

G. Concealed (gas piping that, when in place in a finished building, would require removal of permanent construction to gain access to the piping) Locations: Except as specified below, install concealed gas piping in airtight conduit constructed of Schedule 40, seamless, black steel pipe with welded joints. Vent conduit to outside and terminate with screened vent cap.

1. Above-Ceiling Locations: Gas piping may be installed in accessible spaces, subject to approval of authorities having jurisdiction, whether or not such spaces are used as plenums. Do not locate valves above ceilings.
2. In Floors: Not permitted.
3. Concealed piping shall not be installed in solid partitions.
4. Tubing (semirigid conduit - CSST) may be installed in partitions if protected with steel striker barriers per NFPA.
5. Prohibited Locations: Do not install gas piping where not allowed by NFPA.
6. In-slab (within building) Fuel Gas Piping: Not permitted.

3.6 VALVE APPLICATIONS

A. Appliance Shutoff Valves for Pressure 0.5 psig or Less: Appliance connector valve or gas stop.

B. Appliance Shutoff Valves for Pressure 0.5 to 2 psig: Gas stop or gas valve.

C. Piping Line Valves, NPS 2 and Smaller: Gas valve.

D. Piping Line Valves, NPS 2-1/2 and Larger: Plug valve or general-duty valve.

E. Valves at Service Meter, NPS 2 and Smaller: Gas valve.

F. Valves at Service Meter, NPS 2-1/2 and Larger: Plug valve.

3.7 PIPING INSTALLATION

A. Refer to Division 23 Section "Common Work Results" for installation of:

1. Basic piping requirements.
2. Joint construction requirements.
3. Hanger, support, and anchor devices.
4. Firestopping
5. Sleeves and Escutcheons
6. Wall penetration system at each service pipe penetration through foundation wall.
7. Dielectric fittings
8. Valves
9. Mechanical Identification

B. Drips and Sediment Traps: Provide drips at points where condensate may collect. Locate where readily accessible for cleaning and emptying. Do not install where condensate would be subject to freezing. Construct drips and sediment traps using tee fitting with bottom outlet plugged or

capped. Use minimum-length nipple of 3 pipe diameters, but not less than 3 inches long, and same size as connected pipe. Provide with space between bottom of drip and floor for removal of plug or cap.

C. Provide fuel gas piping at uniform grade of ¼” per 15 feet.

D. Use eccentric reducer fittings to make reductions in pipe sizes. Provide fittings with level side down.

E. Connect branch piping from top or side of horizontal piping.

F. Provide and support corrugated, stainless-steel tubing system according to manufacturer's written instructions. Include striker plates to protect tubing from puncture where tubing is restrained and cannot move.

G. Provide strainer on inlet of each line pressure regulator.

H. Extend relief vent connections for service regulators, line regulators, and overpressure protection devices to outdoors and terminate with weatherproof vent cap.

3.8 SEISMIC RESTRAINT OF PIPING

A. Seismic restraint systems must be installed in strict accordance with the manufacturers written instructions and all certified submittal data.

B. Installation of seismic restraints must not cause any change of position of equipment or piping resulting in stresses or misalignment.

C. Coordinate work with other trades to avoid rigid contact with the building.

D. Overstressing of the building structure must not occur because of overhead support of equipment. Generally bracing may occur from flanges of structural beams, upper truss cords in bar joist construction, or cast in place inserts or wedge type drill-in concrete anchors.

E. Cable restraints shall be installed slightly slack to avoid short-circuiting the isolated suspended equipment, piping or conduit. Cable assemblies shall be installed taut on non-isolated systems. Seismic solid braces may be used in place of cables on rigidly attached systems only.

1. The support rods must be braced when necessary to accept compressive loads with steel angles and rod clamp assemblies.
2. At all locations where restraints are attached to pipe clevis's, the clevis cross bolt must be reinforced with pipe clevis cross bolt braces.
3. Seismically restrain the following piping: Fuel gas piping that is 1" I.D. or larger.
4. Piping exclusions:

    a. Gas piping less than 1" inside diameter.
    b. All piping suspended by individual hangers 12" or less as measured from the top of the pipe to the bottom of the support where the hanger is attached. However, if the 12" limit is exceeded by any hanger in the run, seismic bracing is required for the run.

c. The 12" exemption applies for trapeze-supported systems if the top of each item supported by the trapeze qualifies.

5. Transverse piping restraints shall be at 20' maximum spacing for all pipe sizes, except where lesser spacing is required to limit anchorage loads.
6. Longitudinal restraints shall be at 80' maximum spacing for all pipe sizes, except where lesser spacing is required to limit anchorage loads.
7. Transverse restraint for one pipe section may also act as a longitudinal restraint for a pipe section of the same size connected perpendicular to it if the restraint is installed within 24" of the elbow or tee or combined stresses are within allowable limits at longer distances.
8. Hold down clamps must be used to attach pipe to all trapeze members before applying restraints in a manner similar to clevis supports.
9. Branch lines may not be used to restrain main lines.

F. Adjust seismic restraints to permit free movement of equipment within normal mode of operation.

3.9 CONNECTIONS

A. Connect piping to appliances using gas with shutoff valves and unions. Provide valve upstream from and within 72 inches of each appliance. Provide union downstream from valve.

B. Sediment Traps: Provide tee fitting with capped nipple in bottom to form drip, as close as practical to inlet of each appliance using gas.

3.10 LABELING AND IDENTIFYING

A. Equipment Nameplates and Signs: Provide engraved plastic-laminate equipment nameplate or sign on or near each service meter, pressure regulator, and specialty valve.

1. Text: In addition to name of identified unit, distinguish between multiple units, inform operator of operational requirements, indicate safety and emergency precautions, and warn of hazards and improper operations.
2. Refer to Division 23 Section "Identification for HVAC" for nameplates and signs.

3.11 PAINTING

A. Comply with requirements in Division 9 for painting interior and exterior LPG piping.

B. Paint exposed, exterior metal piping, valves, regulators, service meters and meter bars, and piping specialties, except components with factory-applied paint or protective coating.

1. Alkyd System: MPI EXT 5.1D.

a. Prime Coat: Alkyd anticorrosive metal primer.
b. Intermediate Coat: Exterior alkyd enamel matching topcoat.
c. Topcoat: Exterior alkyd enamel
d. Color: As selected by Architect

C. Damage and Touchup: Repair marred and damaged factory-applied finishes with materials and by procedures to match original factory finish.

3.12 FIELD QUALITY CONTROL

A. Inspect, test, and purge piping according to NFPA 54/58 chapter: "Inspection, Testing, and Purging," and requirements of authorities having jurisdiction.

B. Repair leaks and defects with new materials and retest system until satisfactory results are obtained.

C. Report test results promptly and in writing to Architect and authorities having jurisdiction.

D. Verify capacities and pressure ratings of service meters, pressure regulators, valves, and specialties.

E. Verify correct pressure settings for pressure regulators.

F. Verify that specified piping tests are complete.

G. Verify that the gas piping has been grounded by Division 26 in accordance with NFPA requirements.

3.13 ADJUSTING

A. Adjust controls and safety devices. Replace damaged and malfunctioning controls and safety devices.

END OF SECTION

SECTION 22 13 16 – PLUMBING SANITARY AND STORM PIPING

PART 1 - GENERAL

1.1 RELATED DOCUMENTS

A. Drawings and general provisions of the Contract, including General and Supplementary Conditions and Division 1 Specification Sections, apply to this Section.

B. Related Sections include the following:

1. Division 22 Section: “Common Work Results”

1.2 SUMMARY

A. This Section includes piping and specialties.

1. Drainage and vent piping.
2. Storm-drainage piping.
3. HVAC condensate waste piping.

B. Drawings show the general layout of piping and accessories but do not show all required fittings and offsets that may be necessary to connect piping to equipment and to coordinate with other trades. Fabricate piping based on field measurements. Provide all necessary fittings and offsets.

C. General layout shown, provide piping to fixtures as required by the local plumbing code. A licensed master plumber shall perform or supervise the work and provide layouts, piping, and fittings as required by code.

1.3 PERFORMANCE REQUIREMENTS

A. Comply with the utility requirements for the connection of to the municipal utility services. Obtain and pay for all necessary permits from the applicable municipal department. Obtain authority to connect to their existing mains.

B. Provide components and installation capable of producing piping systems with working-pressure ratings per local plumbing code.

1.4 SUBMITTALS

A. Product Data: Include rated capacities and shipping, installed, and operating weights. Indicate materials, finishes, dimensions, required clearances, and methods of assembly of components; and piping and wiring connections.

B. Field Test Reports: Indicate and interpret test results for compliance with performance requirements.

1.5 QUALITY ASSURANCE

A. Piping materials shall bear label, stamp, or other markings of specified testing agency.

B. Comply with the local building and plumbing codes.

PART 2 - PRODUCTS

2.1 CAST-IRON SOIL PIPING

A. Hubless

1. Hubless Cast Iron pipe and fittings shall be manufactured from gray cast iron and shall conform to ASTM A-888 and CISPI Standard 301. All pipe and fittings shall be marked with the collective trademark of the Cast Iron Soil Pipe Institute.
2. Hubless couplings shall conform to ASTM C-1540 heavy duty couplings.
3. Gaskets shall conform to ASTM C-564. All pipe and fittings to be produced by a single manufacturer and are to be installed in accordance with manufacturer's recommendations and local code requirements.
4. Couplings shall be installed in accordance with the manufacturer's band tightening sequence and torque. Tighten bands with a properly calibrated torque limiting device.

B. Hub and Spigot Cast Iron Soil Pipe and Fittings:

1. Hub and Spigot Cast Iron pipe and fittings shall be manufactured from gray cast iron and shall conform to ASTM A-74. All pipe and fittings shall be marked with the collective trademark of the Cast Iron Soil Pipe Institute. Pipe and fittings to be Extra Heavy (XH).
2. Joints can be made using a compression gasket manufactured from a neoprene elastomer meeting the requirements of ASTM C-1563 or lead and oakum. All pipe and fittings to be produced by a single manufacturer and are to be installed in accordance with manufacturer's recommendations and local code requirements. The system shall be hydrostatically tested after installation to 10 ft. of head (4.3 psi maximum).

2.2 PVC DRAINAGE PIPING

A. Pipe and fittings shall be manufactured from PVC compound with a cell class of 12454 per ASTM D-1784 and conform with National Sanitation Foundation (NSF) standard 14. Pipe shall be iron pipe size (IPS) conforming to ASTM D-1785 and ASTM D-2665. Fittings shall conform to ASTM D-2665.

B. All pipe and fittings to be produced by a single manufacturer and to be installed in accordance with manufacturer's recommendations and local code requirements. Solvent cements shall conform to ASTM D-2564, primer shall conform to ASTM F-656. The system to be manufactured by Charlotte Pipe and Foundry Co. or approved equal; and shall be intended for non-pressure drainage applications where the temperature will not exceed 140°F.

C. Solvent cement joints for PVC pipe and fittings shall be clean from dirt and moisture. Pipe shall be cut square and pipe shall be deburred. Where surfaces to be joined are cleaned and free of dirt, moisture, oil and other foreign material, apply primer in accordance with ASTM F656.

2.3 COPPER TUBE AND FITTINGS

A. Copper Type DWV Tube: ASTM B 306, drainage tube, drawn temper.

B. Copper Drainage Fittings: ASME B16.23, cast copper or ASME B16.29, wrought copper, solder-joint fittings.

C. Hard Copper Tube: ASTM B 88, Type L and Type M, water tube, drawn temper.

D. Soft Copper Tube: ASTM B 88, Type L, water tube, annealed temper.

E. Solder: ASTM B 32, lead free with ASTM B 813, water-flushable flux.

2.4 PVC PRESSURE PIPING

A. All pipe and fittings to be produced by a single manufacturer and to be installed in accordance with manufacturer's recommendations and local code requirements. Solvent cements shall conform to ASTM D-2564, primer shall conform to ASTM F-656. The system to be manufactured by Charlotte Pipe and Foundry Co. and is intended for pressure applications where the temperature will not exceed 140°F.

B. Solid Wall: Pipe and fittings shall be manufactured from PVC compound with a cell class of 12454 per ASTM D-1784 and conform with National Sanitation Foundation (NSF) standards 14 and 61. Pipe shall be iron pipe size (IPS) conforming to ASTM D-1785. Fittings shall conform to ASTM D-2466.

2.5 CLEANOUTS

A. Manufacturers

1. Zurn
2. Smith, Jay R. Mfg. Co.
3. Josam Co.
4. Tyler Pipe, Wade Div.
5. Watts Industries, Inc., Drainage Products Div.
6. Mifab
7. Wade

B. Provide per plumbing code.

C. Cleanouts shall be easily accessible and shall be gastight and watertight. Provide a minimum clearance of 24 inches for the rodding. Size of cleanout shall be same as pipe size through 4". Pipes 4" and larger shall have 4" cleanouts.

D. Basis of Design ZN1400-NH-5BZ1

1. Compliance: ANSI/ASME A112.36.2M.
2. Load Rating: Up to 2,000 pounds or as scheduled
3. Body: Dura Coated cast iron, with gas and water tight non-corroding ABS tapered plug and standard or EZ1 top assembly.
4. When a waterproof membrane is used in the floor system, provide clamping collars on the cleanouts.
5. In carpeted areas, provide carpet cleanout markers.
6. Round, square, or recessed for tile tops as required
7. Provide vandal secured top when scheduled

E. Cleanouts shall consist of "Y" fittings and (1/8 inch) bends with brass or bronze screw plugs.

F. Provide cleanouts at or near the base of the vertical stacks with the cleanout plug located approximately 24 inches above the floor. If there are no fixtures installed on the lowest floor, the cleanout shall be installed at the base of the stack Cleanout shall consist of sanitary tees. . Extend the cleanouts to the wall access cover; Zurn 1400 Series.

G. In horizontal runs above grade, cleanouts shall consist of cast brass tapered screw plug in fitting or caulked/no hub cast iron ferrule. Plain end (no-hub) piping in interstitial space or above ceiling may use plain end (no-hub) blind plug and clamp.

2.6 FLOOR DRAINS

A. Manufacturers

1. Zurn Industries, Inc
2. Jay R. Smith Mfg. Co.
3. Tyler Pipe, Wade Div.
4. Watts Industries, Inc
5. Mifab
6. Wade

B. Floor drains shall comply with ASME A112.21.1M. Provide outlet type as required by piping system used.

C. Provide ½” trap primer connection as indicated on plans. Size: Same as floor drain outlet with NPS 1/2 side inlet.

D. Heavy Duty: mechanical rooms; ZURN Z550-NH-P 9" diameter top drain, Dura-Coated cast iron body with 3” bottom outlet, seepage pan and combination membrane flashing clamp and frame with medium-duty cast iron deep slotted grate.

2.7 TRAP SEAL PRIMER VALVES

A. Manufacturers:

1. Precision Plumbing Products, Inc.
2. Josam Co.
3. Watts.
4. Zurn
5. Mifab
6. Sioux Chief

B. Trap primer make up lines shall have a continuous slope to the floor drain.

C. Electronic Trap Primer – TP-1

1. Precision Plumbing Products Model MP-500
2. Operation: A preset timer energizes a normally closed electronic solenoid valve. Potable water flows across the air gap and is distributed via trap primer feed lines. The timer then de-energizes the solenoid allowing it to close until the next operational cycle.
3. Cabinet: Surface-mounted steel box; NEMA Type 1, UL 50, 12” x 12” x 4” - 16-gauge steel w/screw on cover ANSI 61 gray polyester powder paint.
4. Electric Controls: Pre-set timer opens once for 6 seconds every 24hours. Electrical Components, Devices, and Accessories: Listed and labeled as defined in NFPA 70, by a qualified testing agency, and marked for intended location and application. 120/1/60, 0.23 Amps. Circuit Breaker, Test Switch, Timer, Solenoid Valve UL Listed. Electrical assembly listed per UL # 73.
5. Air gap fitting
6. Solenoid valve with integral strainer screen
7. Piping: ASTM B 88, Type L copper water tubing. 95-5 lead-free. Containing lead not in the excess of 0.2%; Inlet: ½” NPT male; Outlet: ½” NPT female.
8. Provide a distribution unit for multiple outlet installations.
9. Standard: ASSE 1044.

2.8 ROOF DRAINS

A. Roof Drains: Comply with ASME A112.21.2M.

B. Manufacturers

1. Zurn
2. Josam Co.
3. Froet Industries
4. Smith, Jay R. Mfg. Co.
5. Tyler Pipe, Wade Div.
6. Watts
7. Mifab

C. Roof Drains: Zurn Z100 series roof drain Coordinate Drain Type with roofer. Provide extensions as required.

D. Standard: Zurn Z100-4NH-DP, 15” Large Diameter roof drain. Dura-Coated cast iron body with combination membrane flashing clamp/gravel guard, Top-Set deck plate and slide locking low silhouette poly-dome.

PART 3 - EXECUTION

3.1 SITE INTERFACE

A. Provide piping from inside face of exterior wall to a distance of approximately 5 feet outside of building. Provide flanged and anchored connection to interior piping.

B. Refer to Division 31 for excavating, trenching, and backfilling.

3.2 PIPING APPLICATIONS

A. Transition and special fittings with pressure ratings at least equal to piping pressure ratings may be used in applications below, unless otherwise indicated.

B. Aboveground and Underground, Soil, Waste, and Vent Piping: Use any of the following piping materials for each size range:

1. Cast iron

    a. Risers/stacks
    b. Exposed to finished space
    c. Heat traced sanitary traps
    d. Sanitary piping serving humidifier drain/flush

2. PVC or Cast iron
    a. Under slab
    b. Concealed
    c. Vents
    d. Storm piping

C. Vent Piping through roof/exposed above roof: Use any of the following piping materials for each size range:

1. Cast iron
2. Schedule 40 PVC DWV

D. HVAC Unit Condensate Indirect Waste: Drain Lines: ¾” minimum diameter; PVC or DWV Copper Tubing: ASTM B 306, Type DWV. PVC drain lines shall not be used in return air plenums.

3.3 PIPING INSTALLATION

A. Refer to Division 23 Section "Common Work Results" for installation of:

1. Basic piping requirements.
2. Joint construction requirements.
3. Hanger, support, and anchor devices.
4. Firestopping
5. Sleeves and Escutcheons
6. Wall penetration system at each service pipe penetration through foundation wall.
7. Dielectric fittings
8. Valves
9. Mechanical Identification

B. Provide cast-iron soil piping according to CISPI's "Cast Iron Soil Pipe and Fittings Handbook," Chapter IV, "Installation of Cast Iron Soil Pipe and Fittings."

1. Make joints according to CISPI.
2. Gasketed Joints: Make with rubber gasket matching class of pipe and fittings.
3. Hubless Joints: Make with rubber gasket and sleeve or clamp.

C. Provide PVC soil and waste drainage and vent piping according to ASTM D 2665.

D. Provide underground PVC soil and waste drainage piping according to ASTM D 2321.

E. AWWA Transition Couplings: Same size as, and with pressure rating at least equal to and with ends compatible with, piping to be joined. Underground Piping NPS 1-1/2 and Smaller: Manufactured fitting or coupling. Underground Piping NPS 2 and Larger: AWWA C219, metal sleeve-type coupling. Aboveground Pressure Piping: Pipe fitting.

F. Flexible Transition Couplings for Underground Non-pressure Drainage Piping: ASTM C 1173 with elastomeric sleeve; ends same size as piping to be joined, and corrosion-resistant metal band on each end.

G. Make changes in direction for drainage and vent piping using appropriate branches, bends, and long-sweep bends. Sanitary tees and short-sweep 1/4 bends may be used on vertical stacks if change in direction of flow is from horizontal to vertical. Use long-turn, double Y-branch and 1/8-bend fittings if 2 fixtures are installed back to back or side by side with common drain pipe. Straight tees, elbows, and crosses may be used on vent lines. Do not change direction of flow more than 90 degrees. Use proper size of standard increasers and reducers if pipes of different sizes are connected. Reducing size of drainage piping in direction of flow is prohibited.

H. Provide drainage piping beginning at low point of each system. Provide true to grades and alignment indicated, with unbroken continuity of invert. Place hub ends of piping upstream. Provide required gaskets according to manufacturer's written instructions for use of lubricants, cements, and other installation requirements. Maintain swab in piping and pull past each joint as completed.

I. Provide drainage and vent piping at the minimum slopes as required by the local plumbing code.

J. Connect drain pans per manufacturer's instructions.

1. Piping shall be provided with a 1/8" foot minimum slope.
2. Height of unit must be carefully coordinated to provide for proper condensate drainage.
3. Piping shall be equal to or larger than the drain pan connection size.

K. Provide cleanouts at grade and extend to where building drains connect to site piping. Sleeves are not required for cast-iron soil piping passing through concrete slabs-on-grade if slab is without membrane waterproofing.

3.4 CONNECTIONS

A. Drawings indicate general arrangement of piping, fittings, and specialties.

B. Connect interior drainage piping to exterior drainage piping.

C. Connect drainage and vent piping to fixtures and equipment as shown on the plans.

D. Connect drainage piping in sizes indicated, but not smaller than required by plumbing code.

E. Provide backflow preventers in each water supply to hydronic systems and to other equipment and water systems that may be sources of contamination. Comply with authorities having jurisdiction.

1. Locate backflow preventers in same room as connected equipment or system.
2. Provide drain for backflow preventers with atmospheric-vent drain connection with air-gap fitting, fixed air-gap fitting, or equivalent positive pipe separation of at least two pipe diameters in drain piping and pipe to floor drain. Locate air-gap device attached to or under backflow preventer. Simple air breaks are not acceptable for this application.
3. Do not install bypass piping around backflow preventers.
4. Access shall be provided for testing, maintenance and repair. Locate backflow preventer between 2 feet and 5 feet above floor.
5. Test of Backflow Prevention Assemblies: Backflow prevention assembly shall be tested using gauges specifically designed for the testing of backflow prevention assemblies. Gauges shall be tested annually for accuracy in accordance with the University of Southern California's Foundation of Cross Connection Control and Hydraulic Research or the American Water Works Association Manual of Cross Connection (Manual M-14).

F. Provide air-gap fittings on draining-type backflow preventers and on indirect-waste piping discharge into sanitary drainage system.

G. Provide traps on plumbing specialty drain outlets.

H. Trap primers:

1. Provide floor-drain, trap-seal primer fittings on inlet to floor drains that require trap-seal primer connection. Primers shall be accessible for maintenance.
2. Provide trap seal primers in accordance with manufacturer's instructions.
3. Cycle trap seal primers a minimum of 6 times to ensure optimum performance.
4. Ensure flux and other debris is removed.

5. Do not install trap seal primers closer than 40 feet apart when using same potable water supply line.
6. Mount trap seal primers in a vertical position 1 foot above finished floor for every 20 feet of floor drain trap make-up water line.
7. Provide union connection above trap seal primers.
8. Provide line shut-off valve upstream of trap seal primers to shut off water supply when performing maintenance on trap seal primers.
9. Avoid direct installation to prevent foreign material from entering directly into trap seal primers.

I. Provide expansion joints on vertical risers, stacks, and conductors as required by code.

J. Cleanouts:

1. Provide cleanouts in aboveground piping and building drain piping according to the following, unless otherwise indicated: Size same as drainage piping up to NPS 4. Use NPS 4 for larger drainage piping unless larger cleanout is indicated. Locate at each change in direction of piping greater than 45 degrees. Locate at minimum intervals of 50 feet for piping NPS 4 and smaller and 100 feet for larger piping. Locate at base of each vertical soil and waste stack.
2. Provide cleanout deck plates with top flush with finished floor, for floor cleanouts for piping below floors.
3. Provide cleanout wall access covers, of types indicated, with frame and cover flush with finished wall, for cleanouts located in concealed piping.
4. Provide flashing flange and clamping device with each stack and cleanout passing through floors with waterproof membrane.

K. Provide floor drains in accordance with manufacturer's instructions at locations indicated on the drawings.

1. Protect installed floor drains from damage during construction.
2. Provide floor drains at low points of surface areas to be drained. Floor s shall be sloped to floor drains.
3. Provide floor drains plumb, level, and to correct elevation.
4. Ensure top of floor drains are flush with top of finished floor.
5. Provide floor drains using manufacturer's supplied hardware.
6. Coordinate depressed/pitched slab with concrete contractor.
7. Provide floor-drain flashing collar or flange so no leakage occurs between drain and adjoining flooring. Maintain integrity of waterproof membranes where penetrated.
8. Provide individual traps for floor drains connected to sanitary building drain, unless otherwise indicated.
9. Provide radon sealant as per Section “Common Work Results”.

L. Roof Drains:

1. Coordination: Roof drains installed and flashed by roofing contractor. Roof drains furnished, insulated, and connected to piping by Division 22.
2. Examine areas to receive roof drains. Notify Architect of conditions that would adversely affect installation or subsequent use. Do not proceed with installation until unsatisfactory conditions are corrected.

3. Provide roof drains in accordance with manufacturer's instructions at locations indicated on the drawings.
4. Provide roof drains plumb, level, and to correct elevation.
5. Provide roof drains using manufacturer's supplied hardware.
6. Protect installed roof drains from damage during construction.

M. Provide interceptors, including trapping, venting, and flow-control fitting, according to authorities having jurisdiction and with clear space for servicing. Set unit in accordance with manufacturer’s recommendations. Provide cleanout immediately downstream from interceptors not having integral cleanout on outlet. Provide grease recovery units on floor. Provide trap, vent, and flow-control fitting according to authorities having jurisdiction. Provide control panel adjacent to unit, unless otherwise indicated.

3.5 FIELD QUALITY CONTROL

A. During installation, notify authorities having jurisdiction at least 24 hours before inspection must be made. Perform tests specified below in presence of authorities having jurisdiction.

1. Roughing-in Inspection: Arrange for inspection of piping before concealing or closing-in after roughing-in and before setting fixtures.
2. Final Inspection: Arrange for final inspection by authorities having jurisdiction to observe tests specified below and to ensure compliance with requirements.

B. Test piping according to procedures of authorities having jurisdiction or, in absence of published procedures, as follows:

1. Test for leaks and defects in new piping and parts of existing piping that have been altered, extended, or repaired. If testing is performed in segments, submit separate report for each test, complete with diagram of portion of piping tested.
2. Leave uncovered and unconcealed new, altered, extended, or replaced drainage and vent piping until it has been tested and approved. Expose work that was covered or concealed before it was tested.
3. Roughing-in Plumbing Test Procedure: Test piping on completion of roughing-in. Close openings in piping system and fill with water to point of overflow, but not less than 10-foot head of water. From 15 minutes before inspection starts to completion of inspection, water level must not drop. Inspect joints for leaks.
4. Finished Plumbing Test Procedure: After plumbing fixtures have been set and traps filled with water, test connections and prove they are gastight and watertight. Plug vent-stack openings on roof and building drains where they leave building. Introduce air into piping system equal to pressure of 1-inch w.g. Use U-tube or manometer inserted in trap of water closet to measure this pressure. Air pressure must remain constant without introducing additional air throughout period of inspection. Inspect plumbing fixture connections for gas and water leaks.
5. Repair leaks and defects with new materials and retest piping, or portion thereof, until satisfactory results are obtained.

C. Re-inspection: If authorities having jurisdiction find that piping will not pass test or inspection, make required corrections and arrange for re-inspection.

D. Reports: Prepare inspection reports and have them signed by authorities having jurisdiction.

3.6 CLEANING

A. Clean interior of piping. Remove dirt and debris as work progresses.

B. Protect drains during remainder of construction period to avoid clogging with dirt and debris and to prevent damage from traffic and construction work.

C. Place plugs in ends of uncompleted piping at end of day and when work stops.

END OF SECTION

SECTION 23 05 00 – COMMON WORK RESULTS

PART 1 - GENERAL

1.1 RELATED DOCUMENTS

A. Drawings and general provisions of the Contract, including General and Supplementary Conditions and Division 1 Specification Sections, apply to this Section.

B. This section applies to Plumbing Division 22 & and HVAC Division 23 sections.

1.2 GENERAL

A. This Section includes mechanical items common to all of this division specification sections.

B. Provide services, skilled and common labor, and all apparatus and materials required for the complete installation as shown and within the intent of the contract documents, field conditions, and code requirements.

C. The intention of these Contract Documents is to call for finished work, fully tested and ready for operation. Any components or labor not mentioned in the Contract Documents but required for functioning systems shall be provided. Should there appear to be any discrepancies or questions of intent, the Contractor shall refer the matter to the Architect/Engineer for decision before start of any related work.

D. Consistency and Completeness: The contract documents are intended to include all components; however, the contract documents may not be perfect. Repetitive, common components (such as volume dampers, thermostats, condensate drains, trap primers, vent pipes, valves, etc.) are shown throughout. If a common component is missing in from the drawings, provide as similar per other areas. There will be no change orders for missing such components, the contractor shall provide consistent, complete, functioning systems.

E. This contractor will be responsible to carry out the commissioning requirements specified. Refer to Division 1 for additional requirements.

1.3 MANUFACTURERS INSTRUCTIONS

A. Provide equipment and components to comply with manufacturer's written installation instructions and published drawings.

B. Follow manufacturer’s instructions for inspection, start-up, calibration, and testing.

1.4 DEFINITIONS

A. “Furnish": Supply and deliver to Project site, ready for unloading, unpacking, assembly, installation, and similar operations.

B. "Provide": Furnish and install, complete and ready for the intended use.

C. “Shall”: The word shall is used to indicate mandatory requirements strictly to be followed in order to conform to the standard and procedures and from which no deviation is permitted.

D. Finished Spaces: Spaces other than mechanical and electrical equipment rooms, furred spaces, pipe and duct shafts, unheated spaces immediately below roof, spaces above ceilings, unexcavated spaces, crawlspaces, and attics.

E. Exposed, Interior Installations: Exposed to view indoors. Examples include finished occupied spaces and mechanical equipment rooms.

F. Exposed, Exterior Installations: Exposed to view outdoors or subject to outdoor ambient temperatures and weather conditions. Examples include rooftop locations.

G. Concealed, Interior Installations: Concealed from view and protected from physical contact by building occupants. Examples include above ceilings and in duct shafts.

H. Concealed, Exterior Installations: Concealed from view and protected from weather conditions and physical contact by building occupants but subject to outdoor ambient temperatures. Examples include installations within unheated shelters.

I. Terminal: A point where the controlled medium, such as fluid or energy, enters or leaves the distribution system.

1.5 SUBMITTALS

A. Provide in accordance with Division 1 of the specifications.

1.6 SUBSTITUTIONS

A. Provide in accordance with Division 1 of the specifications.

1.7 QUALITY ASSURANCE

A. All work, materials, and equipment shall comply with the rules and regulations of all codes and ordinances of the local, state, and federal authorities. Such codes, when more restrictive, shall take precedence over these plans and specifications.

B. Multiple Units: When two or more units of materials or equipment of the same type or class are required, these units shall be products of one manufacturer.

C. Installer Qualifications: Work shall be done by skilled mechanics shall have successfully completed an apprenticeship program or another craft training program.

D. The Contractor shall hold a license to perform the work as issued by the local jurisdiction.

E. Plumbing: General layout shown, provide piping as required by the local plumbing code. A licensed master plumber shall perform or supervise the work and provide layouts, piping, and fittings as required by code.

1.8 COORDINATION

A. Coordinate use of project space and sequence of installation of work, which is indicated diagrammatically on drawings. Follow routings shown, as closely as practicable, with due allowance for available physical space; make runs parallel with lines of building. Utilize space efficiently to maximize accessibility for other installations, for maintenance, and for repairs.

B. Coordinate use of project space and sequence of installation of work.

C. Arrange for pipe spaces, chases, slots, and openings in building structure during progress of construction, to allow for installations. Coordinate installation of required supporting devices and set sleeves in poured-in-place concrete and other structural components as they are constructed.

D. Coordinate requirements for access panels and doors for items requiring access that are concealed behind finished surfaces. Access panels shall be provided for any item requiring inspection or maintenance. Access panels shall be of sufficient size and located so that the concealed items may be serviced, maintained, or replaced.

1. Access panels and doors are specified and provided by Division 8.

1.9 TEST ADJUST AND BALANCE READINESS

A. The Contractor shall provide and coordinate the services of qualified, responsible sub-contractors, suppliers and personnel as required to correct, repair, and/or replace any and all deficient items or conditions found during the course of this project, including the testing, adjusting, and balancing period.

B. In order that all systems may be properly tested, balanced, and adjusted as required herein by these Specifications, the Contractor shall operate the systems at his expense for the length of time necessary to properly verify their completion and readiness for TAB. Project Contract completion schedules shall allow for sufficient time to permit the completion of TAB services prior to Owner occupancy. The Contractor shall allow adequate time for the testing and balancing activities of the Owner provided services, during the construction period, and prior to Substantial Completion as defined in the Uniform General Conditions of this Construction Document.

C. The Drawings and Specifications indicate adjustment devices for the purpose of adjustment to obtain optimum operating conditions, and it will be the responsibility of the Contractor to provide these devices in a manner that will leave them accessible and readily adjustable. Should any such device not be readily accessible, the Contractor shall provide access as requested by the TAB Firm. Also, any malfunction encountered by TAB personnel and reported to the Contractor shall be corrected by the Contractor immediately so that the balancing work can proceed with the minimum of delays.

D. Complete operational readiness of the HVAC systems also requires that the following be accomplished:

1. Distribution Systems:

   a. Verify installation for conformity to design. Ducts shall be terminated and tested as required by the Specification.
   b. Dampers shall be properly located and functional. Dampers shall have tight closure and open fully with smooth and free operation.
   c. RGD'S and terminal devices shall be provided and secured in a fully open position.
   d. Air handling systems and associated apparatus shall be sealed to eliminate uncontrolled bypass or leakage of air. Final clean filters shall be in place, coils shall be clean with fins straightened, bearings properly greased, and the system shall be completely operational. The Contractor shall verify that all systems are operating within the design pressure limits of the piping and ductwork.
   e. Under normal operating conditions, check condensate drains for proper connections and functioning. Cooling coil drain pans have a positive slope to drain. Cooling coil condensate drain trap maintains an air seal.
   f. Fans shall be operating and verified for freedom from vibration, proper fan rotation.
   g. Bearings shall be greased.
   h. Terminal units shall be provided and functional (i.e. controls functioning).

2. Water Circulating Systems:

   a. Verify installation for conformity to design. Hydronic systems are pressure tested, flushed, filled, and properly vented; valves are fully open. Examine HVAC system and equipment installations to verify that indicated balancing devices are properly provided, and that their locations are accessible and appropriate for effective balancing and for efficient system and equipment operation
   b. Valves shall be set to their fully open position. After the system is flushed and checked for proper operation, strainers shall be removed and cleaned. The Contractor shall repeat the operation until circulating water is clean and then the start-up strainers shall be discarded.
   c. Record motor amperage on each phase and voltage after reaching rated speed. Readings shall not exceed nameplate rating. Thermal overload protection is in place.
   d. In preparation of TAB, water circulating systems shall be full and free of air, expansion tanks shall be set for proper water level, and all air vents shall be provided at high points of systems and operating freely. Chemicals shall be added to closed systems to treat piping and inhibit corrosion. The system static pressure shall be adequate to completely fill the system without operating the pumps.
   e. Check and set operating parameters of the heat transfer and control devices to the design requirements.
   f. Proper balancing devices shall be in place and located correctly. Heat transfer coils shall be checked for correct piping connections.

3. Building Automation System (BAS)

   a. The BAS Contractor shall verify that all control components are provided in accordance with project requirements and are functional.
   b. The BAS Contractor shall verify that all controlling instruments are calibrated and set for design operating conditions with the exception of components that require input from the TAB Agency, but a default shall be set. The Control Contractor shall cooperate with the TAB Agency and provide all software and interfaces to communicate with the system.
   c. The BAS Contractor shall thoroughly check all controls, sensors, operators, sequences, etc. before notifying the TAB Agency that the BAS is operational. The BAS Contractor shall provide technical support (technicians and necessary computers) to the TAB Agency for a complete check of these systems.
   d. Prior to occupancy, each ventilation system shall be tested to ensure that OA dampers operate properly in accordance with system design.
   e. Fire Alarm: Division 26 shall thoroughly check all detection devices, sequences, inter-locks, etc. before notifying the TAB Agency that the system is operational. Division 26 shall certify that the systems are totally operational to the Contractor prior to the TAB beginning.

1.10 RENOVATION PROJECTS

A. The Contractor shall cooperate with the Owner to minimize conflicts with the Owner's operations.

B. The Contractor shall study all drawings and specifications, visit the site, and get acquainted with the existing conditions and the requirements of the plans and specifications. No claim will be recognized for extra compensation due to the failure of the Contractor to be familiarized with the conditions and extent of the proposed work. The Contractor shall execute all alterations, additions, removals, relocations or new work, etc., as indicated or required to provide a complete installation in accordance with the intent of the drawing and specifications.

C. Use of Site: Limit use of premises to work in areas indicated. Do not disturb portions of site beyond areas in which the Work is indicated. Keep driveways and entrances serving premises clear and available to Owner. Schedule deliveries to minimize use of driveways and entrances and minimize space and time requirements for storage of materials and equipment on-site.

D. Follow the recommended procedures of the SMACNA IAQ Guidelines for Occupied Buildings under Construction.

   1. Dust partitions and depressurization of the work are performed under Division 1.
   2. Duct system openings shall be sealed with plastic.
   3. If approved by Owner, and the system needs to be operational during construction, temporary filters shall be added to return grilles. All filters must receive frequent periodic maintenance and be replaced at end of project. The heaviest work areas shall be dampered off or otherwise blocked if temporary imbalance of the return air system does not create a greater problem.

E. Continuity of Services: The building will be in use during construction operations. Maintain existing systems in operation within all rooms of building at all times. Schedules for various

phases of contract work shall be coordinated with all other trades and with Owner's Representative. Provide, as part of contract, temporary plumbing and mechanical and electrical connections and relocations as required to accomplish the above. Do not interrupt utilities serving facilities occupied by Owner or others unless permitted under the following conditions and then only after arranging to provide temporary utility services. Notify Owner at least two days in advance of proposed utility interruptions. Identify extent and duration of utility interruptions. Indicate method of providing temporary utilities. Do not proceed with utility interruptions without Owner's written permission.

F. Cutting And Patching: Provide temporary support of Work to be cut. Protect in-place construction during cutting and patching to prevent damage. Provide protection from adverse weather conditions for portions of Project that might be exposed during cutting and patching operations. Avoid interference with use of adjoining areas or interruption of free passage to adjoining areas.

1. Where existing services/systems are required to be removed relocated, or abandoned, bypass such services/systems before cutting to prevent interruption to occupied areas.
2. Employ skilled workers to perform cutting and patching. Proceed with cutting and patching at the earliest feasible time, and complete without delay. Cut in-place construction to provide for installation of other components or performance of other construction, and subsequently patch as required to restore surfaces to their original condition.
3. Cut in-place construction by sawing, drilling, breaking, chipping, grinding, and similar operations, including excavation, using methods least likely to damage elements retained or adjoining construction. If possible, review proposed procedures with original installer; comply with original installer's written recommendations.
4. Patch construction by filling, repairing, refinishing, closing up, and similar operations following performance of other Work. Patch with durable seams that are as invisible as possible. Provide materials and comply with installation requirements specified in other Sections. Restore exposed finishes of patched areas and extend finish restoration into retained adjoining construction in a manner that will eliminate evidence of patching and refinishing. Clean piping, conduit, and similar features before applying paint or other finishing materials. Restore damaged pipe covering to its original condition.
5. Exterior Building Enclosure: Patch components in a manner that restores enclosure to a weathertight condition.
6. Cleaning: Clean areas and spaces where cutting and patching are performed. Completely remove paint, mortar, oils, putty, and similar materials.

PART 2 - PRODUCT

2.1 GENERAL

A. Work shall be conducted, installed, and completed in a neat and professional manner reflecting a minimum level of competent workmanship.

2.2 PRODUCT CRITERIA

A. Standard Products: Material and equipment shall be the standard products of a manufacturer regularly engaged in the manufacture of the products for at least 3 years. See other specification sections for any exceptions.

B. Equipment Service: Products shall be supported by a service organization that maintains a complete inventory of repair parts and is located reasonably close to the site.

C. Multiple Units: When two or more units of materials or equipment of the same type or class are required, these units shall be products of one manufacturer.

D. Assembled Units: Manufacturers of equipment assemblies, which use components made by others, assume complete responsibility for the final assembled product.

E. Nameplates: Nameplate bearing manufacturer's name or identifiable trademark shall be securely affixed in a conspicuous place on equipment, or name or trademark cast integrally with equipment, stamped or otherwise permanently marked on each item of equipment.

F. Asbestos products or equipment or materials containing asbestos shall not be used.

2.3 IDENTIFICATION

A. Equipment:

1. Terminology: Match schedules as closely as possible.
2. Tag and description: Example: “EF-1 - Bathroom Exhaust”
3. Equipment Markers: neatly lettered using a Sharpie permanent marker.
4. In addition to the equipment tag, equipment located above the ceiling that requires servicing shall be labeled on the ceiling grid using a labeling machine.

B. Piping Identification Devices

1. Manufactured Pipe Markers, General: Seton, Brady, or approved equal; preprinted, color-coded, with lettering indicating service, and showing direction of flow.
2. ASME Compliance: Comply with ASME A13.1, "Scheme for the Identification of Piping Systems," for letter size, length of color field, colors, and viewing angles of identification devices for piping. Lettering: Use piping system terms indicated and abbreviate only as necessary for each application length. Size of letters and length of color field per ASME A13.1.
3. Pipes with OD, Including Insulation; Full-band snap-around pipe markers extending 360 degrees around pipe at each location. Arrows: Integral with piping system service lettering to accommodate both directions; or as separate unit on each pipe marker to indicate direction of flow. Length of color field and size of letters shall be proportional to pipe OD.
4. Types: Self-adhesive type: Seton Opti-Code; Snap-around type: Seton Setmark; Wrap-around type: Seton Ultra-mark; PVF over-laminated polyester construction seals in and protects graphics; suitable for outdoor or harsh environments.

C. Concealed manual volume dampers shall be visible outside the insulation and marked with 12" orange ribbon.

2.4 PIPE JOINING MATERIALS

A. Provide per local code.

B. Pipe Threads: ASME B1.20.1 for factory-threaded pipe and pipe fittings.

C. Pipe-Flange Gasket Materials: Suitable for chemical and thermal conditions of piping system contents. ASME B16.21, nonmetallic, flat, asbestos-free, 1/8-inch maximum thickness unless thickness or specific material is indicated. Full-Face Type: For flat-face, Class 125, cast-iron and cast-bronze flanges. Narrow-Face Type: For raised-face, Class 250, cast-iron and steel flanges. AWWA C110, rubber, flat face, 1/8 inch thick, unless otherwise indicated; and full-face or ring type, unless otherwise indicated. Flange Bolts and Nuts: ASME B18.2.1, carbon steel, unless otherwise indicated.

D. Press Connections
1. Basis-of-Design Product: Subject to compliance with requirements, provide Viega LLC; ProPress, Apollo, or approved equal.
2. Press ends shall have Viega Smart Connect, Apollo Leak Before Press, or similar technology designed into the fitting itself, allowing identification of an un-pressed fitting during pressure testing. The function of this feature is to provide the installer quick and easy identification of connections which have not been pressed prior to putting the system into operation.
3. Copper and copper alloy press fittings shall conform to material requirements of ASME B16.18 or ASME B16.22 and performance criteria of ASME B16.51 and IAPMO PS 117. Sealing elements for press fittings shall be EPDM. Sealing elements shall be factory installed or an alternative supplied by fitting manufacturer.
4. Steel: Cold Press Mechanical Joint Fitting shall conform to material requirements of ASTM A420 or ASME B16.3 and performance criteria ANSI/CSA LC4. Sealing elements for press fittings shall be HNBR. Sealing elements shall be factory installed or an alternative supplied by fitting manufacturer. Piping and fittings shall comply with CSA LC-4 and local codes.

E. Mechanical Coupling Gasket Materials: Suitable for the chemical and thermal conditions of the piping system contents and exterior environment. Gasket design shall be such that the entire coupling housing is isolated from the system contents to prevent galvanic action and inhibit galvanic corrosion.

F. Plastic, Pipe-Flange Gasket, Bolts, and Nuts: Type and material recommended by piping system manufacturer, unless otherwise indicated.

G. Solder Filler Metals: ASTM B 32, lead-free alloys. Include water-flushable flux according to ASTM B 813.

H. Brazing Filler Metals: AWS A5.8, BCuP Series, copper-phosphorus alloys for general-duty brazing, unless otherwise indicated; and AWS A5.8, BAg1, silver alloy for refrigerant piping, unless otherwise indicated.

I. Welding Filler Metals: Comply with AWS D10.12 for welding materials appropriate for wall thickness and chemical analysis of steel pipe being welded.

J. Solvent Cements for Joining Plastic Piping: CPVC Piping: ASTM F 493. PVC Piping: ASTM D 2564. Include primer according to ASTM F 656.

K. Plastic-to-Metal Transition Fittings: one-piece fitting with manufacturer's Schedule 80 equivalent dimensions; one end with threaded brass insert, and one solvent-cement-joint end.

L. PE Piping Heat-Fusion Joints: Clean and dry joining surfaces by wiping with clean cloth or paper towels. Join according to ASTM D 2657. Plain-End Pipe and Fittings: Use butt fusion. Plain-End Pipe and Socket Fittings: Use socket fusion.

M. Provide dielectric isolation at the connection of the dissimilar metals. Provide brass ball valves or fittings; or Watts Series LF3000 (lead free) or approved equal.

2.5 SLEEVES & ESCUTCHEONS

A. Cast-Iron Wall Pipes: Cast or fabricated of cast or ductile iron and equivalent to ductile-iron pressure pipe, with plain ends and integral water-stop unless otherwise indicated.

B. Galvanized-Steel Wall Pipes: ASTM A 53/A 53M, Schedule 40, with plain ends and welded steel collar; zinc coated.

C. Galvanized-Steel-Pipe Sleeves: ASTM A 53/A 53M, Type E, Grade B, Schedule 40, zinc coated, with plain ends.

D. Galvanized-Steel-Sheet Sleeves: 0.0239-inch minimum thickness; round tube closed with welded longitudinal joint.

E. Molded-PE or -PP Sleeves: Removable, tapered-cup shaped, and smooth outer surface with nailing flange for attaching to wooden forms.

F. Provide wall penetration system where service pipes penetrate through foundation wall or floor. Make installation watertight. Mechanical Sleeve Seals: Modular sealing element unit, designed for field assembly, to fill annular space between pipe and sleeve; Thunderline Link-Seal, or approved equal.

1. Sealing Elements: EPDM interlocking links shaped to fit surface of pipe. Include type and number required for pipe material and size of pipe.
2. Pressure Plates: Glass-reinforced nylon.
3. Connecting Bolts and Nuts: Stainless steel, of length required to secure pressure plates to sealing elements.

G. Escutcheons shall be manufactured from nonferrous metals and shall be chrome-plated. Metals and finish shall conform to ASME A112.19.2. Escutcheons shall be one-piece type where mounted on chrome-plated pipe or tubing, and one-piece of split-pattern type elsewhere. ID shall closely fit around pipe, tube, and insulation of insulated piping and an OD that completely cover the opening. All escutcheons shall have setscrews for maintaining a fixed position against a surface.

2.6 HANGERS AND SUPPORTS FOR PIPING AND EQUIPMENT

A. Provide in accordance with MSS SP69 - Manufacturers Standardization Society: Pipe Hangers and Supports- Selection and Application. Steel pipe hangers and supports shall have the manufacturer's name, part number, and applicable size stamped in the part itself for identification.

B. The materials of all pipe hanging and supporting elements shall be in accordance with MSS SP-58. Welding: Qualify processes and operators according to ASME Boiler and Pressure Vessel Code: Section IX, "Welding and Brazing Qualifications."

C. Steel Support Welding: Qualify processes and operators according to AWS D1.1, "Structural Welding Code--Steel." Steel Pipe Welding: Qualify processes and operators according to ASME Boiler and Pressure Vessel Code: Section IX, "Welding and Brazing Qualifications." Comply with provisions in ASME B31 Series, "Code for Pressure Piping." Certify that each welder has passed AWS qualification tests for welding processes involved and that certification is current.

D. Delegated-Design Submittal: For hangers indicated to comply with performance requirements and design criteria, including analysis data signed and sealed by the qualified professional engineer responsible for their preparation. Show fabrication and installation details and include calculations for the following; include Product Data for components: Trapeze pipe hangers, Metal framing systems, Pipe stands, Equipment supports.

E. Manufacturers: Subject to compliance with requirements, provide products by one of the following:

1. B-Line Systems, Inc.
2. Carpenter & Patterson, Inc.
3. Grinnell Corp.
4. Hubbard Enterprises/Holdrite
5. National Pipe Hanger Corp.
6. Piping Technology & Products, Inc.
7. Unistrut
8. Anvil International, Inc.
9. Empire

F. Hangers:

1. Uninsulated pipes 2 inch and smaller: Adjustable steel swivel ring (band type) hanger, Type 10, B-Line B3170; Adjustable steel swivel J-hanger, Type 5, B-Line B3690; Malleable iron ring hanger, Type 12, B-Line B3198R or hinged ring hanger, B3198H.Adjustable steel clevis hanger, Type 1, B-Line B3100.
2. Uninsulated pipes 2-1/2 inch and larger: Adjustable steel clevis hanger, Type 1, B-Line B3100.
3. Insulated pipe- Hot piping: 2 inch and smaller pipes: use adjustable steel clevis with galvanized sheet metal shield. Type 1, B-Line B3100 with Type 40, B-Line B3151 series insulation protection shield. 2-1/2 inch and larger pipes: Type 41 or Type 43 with Type 39A/39B, B3160-B3165 series pipe covering protection saddle.

4. Insulated pipe- Cold piping: use adjustable steel clevis with galvanized sheet metal shield. Type 1, B-Line B3100 with Type 40, B-Line B3151 series insulation protection shield.

G. Pipe Clamps: When flexibility in the hanger assembly is required due to horizontal movement, use pipe clamps with weldless eye nuts, Type 4, B-Line B3140. For insulated lines use double bolted pipe clamps, Type 3, B-Line B3144.

H. Multiple or Trapeze Hanger: Trapeze hangers shall be constructed from 12-gauge roll formed ASTM A1011 SS Grade 33 structural steel channel, 1-5/8 inch by 1-5/8-inch minimum, B-Line B22 strut or stronger as required. Mount pipes to trapeze with 2-piece pipe straps sized for outside diameter of pipe, B-Line B2000 Series.

I. Wall Supports: Pipes 4 inch and smaller: Carbon steel J-hanger, B-Line B3690. Pipes larger than 4 inch: Welded strut bracket and pipe straps, Type 31 light welded steel bracket, B-Line B3064. Provide Type 32 or Type 33 for heavier loads.

J. Floor Supports: Hot piping under 6 inch and all cold piping: Carbon steel adjustable pipe saddle and nipple attached to steel base stand sized for pipe elevation. Type 38 adjustable pipe saddle, B-Line B3093 and B3088T base stand; or Type 39, B3090 and B3088 base stand. Pipe saddle shall be screwed or welded to appropriate base stand. Hot piping 6 inch and larger: Adjustable Roller stand with base plate, Type 46, B3118SL. Adjustable roller support and steel support sized for elevation, B-Line B3124.

K. Vertical Supports: Steel riser clamp sized to fit OD of pipe, Type 8, B-Line B3373.

L. Copper Tubing Supports Hangers shall be sized to fit copper tubing outside diameters. Adjustable steel swivel ring (band type) hanger, Type 10, B-Line B3170CT. Malleable iron ring hanger, Type 12, B-Line B3198RCT or hinged ring hanger B3198HCT. Adjustable steel clevis hanger, Type 1, B-Line B3104CT. For supporting copper tube to strut use plastic inserted vibration isolation clamps, B-Line BVT series.

M. Plastic Pipe Supports: V-Bottom clevis hanger with galvanized 18-gauge continuous support channel, Type 1, B-Line B3106 and B3106V plastic pipe support channel, to form a continuous support system for plastic pipe or flexible tubing.

N. Supplementary Structural Supports: Design and fabricate supports using structural quality steel bolted framing materials as manufactured by Cooper B-Line. Channels shall be roll formed, 12 gauge ASTM A1011 SS Grade 33 steel, 1-5/8 inch by 1-5/8 inch or greater as required by loading conditions. Submit designs for pipe tunnels, pipe galleries, etc., to engineer for approval. Use clamps and fittings designed for use with the strut system.

O. Beam Clamps shall be used where piping is to be suspended from building steel. Clamp type shall be selected on the basis of load to be supported, and load configuration. C-Clamps shall have locknuts and cup point set screws, Type 23, B-Line B351L. Refer to manufacturer's recommendation for setscrew torque. Retaining straps shall be used to maintain the clamps position on the beam where required.

P. Concrete Inserts: Cast in place spot concrete inserts shall be used where applicable; either steel or malleable iron body, Type 18, B-Line B2500 or B3014. Spot inserts shall allow for lateral adjustment and have means for attachment to forms. Select inserts to suit threaded hanger rod

sizes, B-Line N2500 or B3014N series. Continuous concrete inserts shall be used where applicable. Channels shall be 12 gauge, ASTM A1011 SS Grade 33 structural quality carbon steel, complete with Styrofoam inserts and end caps with nail holes for attachment to forms. The continuous concrete insert shall have a load rating of 2,000 lbs./ft. in concrete, B-Line B22I, 32I, or 52I. Select channel nuts suitable for strut and rod sizes.

Q. For air conditioning and other vibrating system applications, use a clamp that has a vibration dampening insert and a nylon inserted locknut. For copper and steel tubing use B-Line BVT-Series Vibraclamps. For larger tubing or piping subjected to vibration, use neoprene or spring hangers as required. For base mounted equipment use vibration pads, molded neoprene mounts, or spring mounts as required.

R. Accessories

1. Hanger Rods shall be threaded both ends, or continuous threaded rods of circular cross section. Use adjusting locknuts at upper attachments and hangers. No wire, chain, or perforated straps are allowed.
2. Shields shall be 180 degree galvanized sheet metal, 12 inch minimum length, 18 gauge minimum thickness, designed to match outside diameter of the insulated pipe, B-Line B3151.
3. Pipe protection saddles shall be formed from carbon steel, 1/8 inch minimum thickness, sized for insulation thickness. Saddles for pipe sizes greater than 12 inch shall have a center support rib.

S. Indoor Finishes: Hangers and clamps for support of bare copper piping shall be coated with copper colored epoxy paint, B-Line Dura-Copper®. Additional PVC coating of the epoxy painted hanger shall be used where necessary. Hangers for other than bare copper pipe shall be zinc plated in accordance with ASTM B633; or shall have an electro-deposited green epoxy finish, B-Line Dura-Green®. Strut channels shall be pre-galvanized in accordance with ASTM A653 SS Grade 33 G90 OR have an electro-deposited green epoxy finish, B-Line Dura-Green®.

T. Outdoor Finishes: Hangers and strut located outdoors shall be hot dip galvanized after fabrication in accordance with ASTM A123. All hanger hardware shall be hot dip galvanized or stainless steel. Zinc plated hardware is not acceptable for outdoor or corrosive use.

U. Unistrut (MFMA) Manufacturer Metal Framing System:

1. Manufacturers: Subject to compliance with requirements, provide products by one of the following:

   a. Unistrut Corporation
   b. Cooper B-Line, Inc.
   c. Flex-Strut Inc.
   d. Thomas & Betts Corporation.

2. Description: Shop- or field-fabricated pipe-support assembly for supporting multiple parallel pipes. Standard: MFMA-4.
3. Channels: Continuous slotted steel channel with in-turned lips. Channel Nuts: Formed or stamped steel nuts or other devices designed to fit into channel slot and, when tightened, prevent slipping along channel.

4. Hanger Rods: Continuous-thread rod, nuts, and washer made of carbon steel.
5. Coating: Unistrut Perma-green or similar.

2.7 THERMOMETERS AND PRESSURE GAUGES

A. Manufacturers: Subject to compliance with requirements, provide products by one of the following:

1. Ashcroft
2. Weksler
3. Ernst Gauge Co.
4. Trerice: H. O. Trerice Co.
5. Weiss Instruments, Inc.

B. The proper range will be selected so that the operating temperature/pressure of the material being measured will fall approximately in the middle of the scale.

C. Liquid-In-Glass Industrial Thermometers: shall be a blue reading (Fill Type Spirit: Blue colored, organic) liquid-in-glass adjustable angle type, 9" scale, cast aluminum case with cured polyester powder coating, clear acrylic window and brass separable thermowell. Thermometers will be Trerice BX9 Series or approved equal.

D. Thermowells: Provide fitting with protective socket for installation in threaded pipe fitting to hold fixed thermometer stem. Material shall be compatible with the piping. Where insulation thickness exceeds 2", a longer stem thermometer will be used with an extension neck brass separable thermowell. The extension neck will be at least 2" long. Cap: Threaded, with chain permanently fastened to socket.

E. Pressure gauges shall be 3½" dial size with a flangeless cast aluminum case, stainless steel friction ring and glass window. Movement will be brass with a bronze bourdon tube and brass socket. Dial face will be white with black figures; pointer will be friction adjustable type. Accuracy shall be ±1% of scale range, ASME B40.1 Grade 1A. Pressure gauges will be Trerice No. 600CB approved equal.

1. Connector: Brass, NPT 1/4.
2. Units of Measure: PSI
3. Provide silicone-damped movement.
4. Provide pressure-gauge needle valve and snubber (Trerice No. 872 pressure snubbers) in piping to pressure gauges; ASME B40.5, NPS 1/4 brass bushing with corrosion-resistant porous-metal disc of material suitable for system fluid and working pressure.
5. Needle Valves: Trerice 735 Series; NPS 1/4 brass or 316 stainless steel needle type.

2.8 INSULATION

A. General

1. Manufacturers: Subject to compliance with requirements, provide products by one of the following:

a. Certainteed
b. Knauf
c. Owens-Corning
d. Manson
e. John Mansville
f. Armstrong
g. Aeroflex USA
h. Nomaco K-Flex
i. Pabco.

2. Surface-Burning Characteristics: For insulation and related materials, as determined by testing identical products according to ASTM E 84, by a testing agency acceptable to authorities having jurisdiction. Factory label insulation and jacket materials and adhesive, mastic, tapes, and cement material containers, with appropriate markings of applicable testing agency.
3. Indoors: Materials shall have a flame spread index of less than 25 and a smoke developed index of less than 50 when tested in accordance with ASTM E 84, latest revision.
4. Outdoors: Flame-spread index of 75 or less, and smoke-developed index of 150 or less.
5. Provide accessory materials as part of insulation work under his section shall include closure materials, adhesives, mastics, and support materials; shall be as recommended by insulation material manufacturer.

B. Piping Insulation Materials

1. Glass Fiber:

a. Knauf 1000° Pipe Insulation with ECOSE Technology meeting ASTM C547 Type IV Grade A, ASTM C585, and ASTM C795; rigid, molded, noncombustible per ASTM E136; k value: ASTM C335, 0.23 at 75°F mean temperature. Maximum Service Temperature: 1000°F, or Johns Manville's Micro-Lok® *HP* meeting ASTM C547, Type I, maximum service temperature of 850°F meeting the other requirements. Vapor Retarder Jacket: ASJ/SSL conforming to ASTM C1136 Type I, secured with self-sealing longitudinal laps and butt strips.
b. PVC Fitting Covers: The Proto Fitting Cover System or Johns Manville Zeston® polyvinyl chloride (PVC) parts shall consist of one piece and two piece pre-molded high impact UV-resistant PVC fitting covers with fiberglass inserts and accessories, which include elbows, tee/valves, end caps, mechanical line couplings, and specialty fittings. Fittings shall be made of Zeston® or LoSMOKE® grade PVC, 25/50 rated per ASTM E-84. Thermal Value of fiberglass insert: K value of 0.26 at 75°F; resistance to fungi and bacteria. (ASTM G 21, ASTM G 22): does not promote growth of fungi or bacteria.

2. Flexible Elastomeric Insulation: Closed-cell, sponge- or expanded-rubber materials. Comply with ASTM C 534, Type I for tubular materials.

a. For indoor applications, adhesive shall have a VOC content of 50 g/L or less when calculated according to 40 CFR 59, Subpart D (EPA Method 24).
b. Adhesive shall comply with the testing and product requirements of the California Department of Health Services' "Standard Practice for the Testing of Volatile

Organic Emissions from Various Sources Using Small-Scale Environmental Chambers."

c. Materials shall have a maximum thermal conductivity of 0.27 Btu-in/h-ft2- °F at a 75°F mean temperature when tested in accordance with ASTM C 177 or ASTM C 518, latest revisions.

d. Materials shall have a maximum water vapor transmission of 0.08 perm-inches when tested in accordance with ASTM E 96, Procedure-A, latest revision.

e. Provide Armaflex WB finish for outdoor exposed piping.

C. Ductwork Insulation Materials

1. Flexible Fiber Glass Blanket: Glass Mineral Wool Blanket Insulation: Glass Mineral Wool bonded with a bio-based thermosetting resin. Comply with ASTM C 553, Types I, II, and III, ASTM C 1136 Type II, and ASTM C 1290, Type III. UL/ULC Classified per UL 723 for FSK, FHC 25/50 per ASTM E 84 for PSK only.

a. Factory-applied jacket: ASJ: White, Kraft paper, fiberglass reinforced scrim with aluminum foil backing; complying with ASTM C 1136, Type I.

b. Basis-of-Design Product: Subject to compliance with requirements, provide Knauf Insulation; Atmosphere Duct Wrap.

c. Density: 1.5 PCF

d. R-Value: R6.0 minimum for 1-1/2” thick blanket (k=0.25).

2. Rigid Fiber Glass Board: Johns Manville’s 817 Series Spin-Glass® or Knauf Insulation Board with ECOSE Technology meeting ASTM C 612 Type IA and IB; rigid. Maximum Service Temperature: 450°. Density: Minimum 3.0 PCF; R4.2 per inch. Vapor Retarder Jacket: ASJ conforming to ASTM C1136 Type I, or FSK or PSK conforming to ASTM C1136 Type II in combination with protective jacket where necessary. R-Value: R6.0 minimum for 1-1/2” thick blanket (k=0.25).

2.9 MISCELLANEOUS

A. Roofing

1. Coordinate roofing with Division 7.
2. Do not locate mechanical equipment within 10 feet of the roof edge.

B. Grout: ASTM C 1107, Grade B, non-shrink and nonmetallic, dry hydraulic-cement grout. Characteristics: Post-hardening, volume adjusting, non-staining, non-corrosive, nongaseous, and recommended for interior and exterior applications. Design Mix: 5000-psi, 28-day compressive strength. Packaging: Premixed and factory packaged.

C. All equipment shall be vibration isolated to prevent vibration transmission to the building structure.

PART 3 - EXECUTION

3.1 DEMOLITION AND REMOVALS

A. Refer to Division 1 for general demolition requirements and procedures.

B. Disconnect, demolish, and remove plumbing and mechanical systems, equipment, and components indicated to be removed.

1. Piping to Be Removed: Remove portion of piping indicated to be removed and cap or plug remaining piping with same or compatible piping material.
2. Piping to Be Abandoned in Place: Drain piping and cap or plug piping with same or compatible piping material.
3. Ducts to Be Removed: Remove portion of ducts indicated to be removed and cap and seal remaining ducts with same or compatible ductwork material.
4. Ducts to Be Abandoned in Place: Cap and seal ducts with same or compatible ductwork material.
5. Equipment to be Removed: Disconnect and cap services and remove equipment.
6. Equipment to be Removed and Reinstalled: Disconnect and cap services and remove, clean, and store equipment; when appropriate, reinstall, reconnect, and make equipment operational.
7. Equipment to Be Removed and Salvaged: Disconnect and cap services and remove equipment and deliver to Owner.

C. If pipe, insulation, or equipment to remain is damaged in appearance or is unserviceable, remove damaged or unserviceable portions and replace with new products of equal capacity and quality.

3.2 COMMON REQUIREMENTS

A. The drawings show the general arrangement of systems and equipment but do not show all required fittings and offsets that may be necessary to connect pipes and ductwork to equipment, and to coordinate with other trades. Provide all necessary fittings, offsets and runs based on field measurements and at no additional cost. Coordinate with other trades for space available and relative location of equipment and accessories. Pipe and duct location on the drawings shall be altered by contractor where necessary to avoid interferences and clearance difficulties.

B. Fabricate based on field measurements.

C. Corrections or comments made on the shop or coordination drawings during the review do not relieve Contractor from compliance with requirements of the drawings and specifications. The Contractor is responsible for: confirming and correcting all quantities; checking electrical characteristics and dimensions; selecting fabrication processes and techniques of construction; coordinating his work with that of all other trades; and performing work in a safe and satisfactory manner.

D. Protection and Cleaning: Equipment and materials shall be carefully handled, properly stored, and adequately protected to prevent damage before and during installation, in accordance with the manufacturer's recommendations. Damaged or defective items shall be replaced. Protect all

finished parts of equipment. Close duct and pipe openings with caps or plugs during installation. Tightly cover and protect fixtures and equipment against dirt, water, chemical, or mechanical injury. At completion of all work thoroughly clean fixtures, exposed materials and equipment.

E. Provide piping, ductwork, and equipment to allow maximum possible headroom unless specific mounting heights are indicated. Provide equipment level and plumb, parallel and perpendicular to other building systems and components in exposed interior spaces, unless otherwise indicated.

F. Provide equipment to facilitate service, maintenance, and repair or replacement of components. Connect equipment for ease of disconnecting, with minimum interference to other installations. Extend grease fittings to accessible locations.

G. Coordinate location of piping, ductwork, sleeves, inserts, hangers, and equipment. Locate to clear other construction, services, and utilities.

H. Any structural member weakened or impaired by cutting, notching, or otherwise shall be reinforced, repaired, or replaced so as to be left in safe structural condition in accordance with the local building code requirements.

I. Provide piping and ductwork in concealed locations, unless otherwise indicated and except in equipment rooms and service areas.

J. Provide systems above accessible ceilings to allow sufficient space for ceiling panel removal.

K. Verify final equipment locations for roughing-in.

L. All systems: Do not enclose, cover, or put into operation until inspected and approved by authorities having jurisdiction.

M. The contract documents indicate required valves, fittings, and accessories. If additional materials are required by code or manufacturer’s instructions, they shall be provided at no cost to the owner.

3.3 PIPING INSTALLATIONS

A. Provide piping indicated to be exposed and piping in equipment rooms and service areas at right angles or parallel to building walls. Diagonal runs are prohibited unless specifically indicated otherwise.

1. Provide piping to permit valve servicing.
2. Provide equipment and other components to allow right of way for piping installed at required slope.
3. Provide free of sags and bends.
4. Provide unions or flanges at connections to equipment.
5. Provide fittings for changes in direction and branch connections.
6. Make allowances for application of insulation.

B. Provide piping adjacent to equipment and machines to allow service and maintenance.

C. Use transition fitting to join dissimilar piping materials. Connect piping in sizes indicated, but not smaller than sizes of unit connections.

D. Select system components with pressure rating equal to or greater than system operating pressure.

E. Plastic piping: Piping shall be installed to avoid damage from adjacent light fixtures. In certain construction situations, these plastic pipes may be installed near recessed light fixtures in ceilings. Light fixtures may have exterior temperatures as high as 194°F.

3.4 PIPING JOINT CONSTRUCTION

A. Pipe and tube required by the applicable standard to be cleaned and capped shall be delivered to the job site with factory-applied end-caps. Maintain end-caps through shipping, storage, and handling to prevent pipe-end damage and prevent entrance of dirt, debris, and moisture. Protect stored pipe and tube from moisture and dirt. Elevate above grade. When stored inside, do not exceed the structural capacity of the floor. Protect fittings, flanges, and piping specialties from moisture and dirt. Store plastic pipes protected from direct sunlight. Support to prevent sagging and bending.

B. Joints shall be fabricated, joined, and tested per the piping and fitting manufacturer's instructions. Joint preparation, setting and alignment, joining process, timing, hanger spacing, and working pressure shall be in accordance with the pipe and fitting manufacturer's specifications.

C. Join pipe and fittings according to the following requirements and the relevant specification section specifying piping systems.

D. Ream ends of pipes and tubes and remove burrs. Remove scale, slag, dirt, and debris from inside and outside of pipe and fittings before assembly.

E. Installer Qualifications

1. Pipe fitters shall be qualified to the procedure used to perform the pipe joining.
2. The contractor is responsible for documenting all qualification and training records of each pipe fitter. Pipe fitters shall have current, formal training on the pipe jointing method.
3. Contractor must submit documentation that lists personnel assigned to this project prior to beginning construction who have successfully completed formal training conducted by an authorized manufacturer's representative. The Contractor Training documentation shall be specific to the manufacturer of the pipe and fittings.
4. Personnel's training documentation must be current and have been updated within the past two (2) years. Training received more than two years prior to operation with no evidence of activity within the past 6 months shall not be considered current.
5. Piping Warranty: Contractor shall provide and document required training and required by the piping system manufacturer in order to maintain the piping manufacturer's warranty.

F. Provide dielectric isolation at the connection of the dissimilar piping (copper and steel).

G. Soldered Joints: Apply ASTM B 813, water-flushable flux, unless otherwise indicated, to tube end. Construct joints according to ASTM B 828 or CDA's "Copper Tube Handbook," using lead-free solder alloy complying with ASTM B 32.

H. Brazed Joints: Construct joints according to AWS's "Brazing Handbook," "Pipe and Tube" Chapter, using copper-phosphorus brazing filler metal complying with AWS A5.8/A5.8M.

I. Threaded Joints:

1. Thread pipe with tapered pipe threads complying with ASME B1.20.1.
2. Cut threads full and clean using sharp dies.
3. Ream threaded pipe ends to remove burrs and restore full inside diameter of pipe.
4. Apply appropriate tape or thread compound to external pipe threads unless dry-seal threading is specified.
5. Damaged Threads: Do not use pipe or pipe fittings with threads that are corroded or damaged. Do not use pipe sections that have cracked or open welds.

J. Press connections:
1. The joints shall be pressed using the tools approved by the manufacturer.
2. Always examine the pipe to ensure it is fully inserted into the fitting prior to pressing the joint.
3. Pipe ends shall be cut on a right angle (square) to the pipe.
4. Copper: The tubing shall be fully inserted into the fitting and the tubing marked at the shoulder of the fitting. The fitting alignment shall be checked against the mark on the tubing to assure the tubing is fully engaged (inserted) in the fitting. The joints shall be pressed using the tools approved by the manufacturer.
5. Steel: Pipe ends shall be reamed chamfered and all paint, lacquer, grease, oil or dirt shall be removed from the pipe end with an abrasive cloth, or with the Rigid MegaPress pipe end prep tool. Sealing elements shall be verified for the intended use. Visually examine the fitting sealing element to ensure there is no damage. Utilizing a Viega insertion depth inspection gauge mark the tube wall, with a felt tip pen, at the appropriate location, or insert the pipe fully into the fitting and mark the pipe wall at the face of the fitting.

K. PEX Joints: Provide per manufacturer’s recommendations. Use manufacturer-recommended cold-expansion tool for F1960 connections.

L. Welded Joints: Construct joints according to AWS D10.12/D10.12M, using qualified processes and welding operators. Bevel plain ends of steel pipe. Patch factory-applied protective coating as recommended by manufacturer at field welds and where damage to coating occurs during construction.

M. Flanged Joints: Provide appropriate gasket material, size, type, and thickness for service application. Provide gasket concentrically positioned. Use suitable lubricants on bolt threads.

N. Joint Construction for Solvent-Cemented Plastic Piping: Clean and dry joining surfaces. Comply with ASTM F 402 for safe-handling practice of cleaners, primers, and solvent cements. Apply primer. CPVC Piping: Join according to ASTM D 2846/D 2846M Appendix. PVC Piping: Join according to ASTM D 2855.

3.5 PIPE PENETRATIONS, SLEEVES, & ESCUTCHEONS

A. Provide sealants for all pipe penetrations. All pipe penetrations shall be sealed.

B. Provide allowance for thermal expansion and contraction of copper tubing passing through a wall, floor, ceiling or partition by wrapping with an approved tape or pipe insulation or by installing through an appropriately sized sleeve.

C. Sleeve Clearance: Sleeve through floors, walls, partitions, and beams shall be one inch greater in diameter than external diameter of pipe. Sleeve for pipe with insulation shall be large enough to accommodate the insulation.

D. Provide sleeves for pipes passing through concrete and masonry construction. Galvanized-Steel Sheet: 0.0239-inch minimum thickness; round tube closed with welded longitudinal joint. Cut sleeves to length for mounting flush with both surfaces. Provide sleeves in new walls and slabs as new walls and slabs are constructed. Provide steel pipe sleeves that are large enough to provide 1/4-inch annular clear space between sleeve and pipe or pipe insulation. Piping through concrete or masonry shall not be subject to any load from the building construction.

1. Sleeves are not required in drywall construction.
2. Sleeves are not required for core-drilled holes. Provide core drilling as required.

E. Fire-Barrier Penetrations: Maintain indicated fire rating of walls, partitions, ceilings, and floors at pipe penetrations. Seal pipe penetrations with firestop materials. Comply with requirements for firestopping specified in Division 7.

F. Exterior- Pipe Penetrations: Provide sleeve-seal systems in sleeves at service piping entries into building. Select type, size, and number of sealing elements required for piping material and size and for sleeve ID or hole size. Position piping in center of sleeve. Center piping in penetration, assemble sleeve-seal system components, and provide in annular space between piping and sleeve. Tighten bolts against pressure plates that cause sealing elements to expand and make a watertight seal.

G. Escutcheons:

1. Provide escutcheons at wall, floor, and ceiling penetrations in exposed finished locations and within cabinets and millwork.
2. Provide escutcheons with ID to closely fit around pipe, tube, and insulation of piping and with OD that completely covers opening.
3. Use deep-pattern escutcheons if required to conceal protruding pipe fittings.

H. Plastic and copper piping penetrating framing members, and within one-inch of the framing, shall be protected with 10-gauge steel nailing plates. The steel plate shall extend along the framing member a minimum of 1.5” beyond the OD of the pipe or tubing.

3.6 PIPE HANGER AND SUPPORT INSTALLATION

A. Metal Pipe-Hanger Installation: Comply with MSS SP-69 and MSS SP-89. Provide hangers, supports, clamps, and attachments as required to properly support piping from the building structure.

B. Metal Trapeze Pipe-Hanger Installation: Comply with MSS SP-69 and MSS SP-89. Arrange for grouping of parallel runs of horizontal piping, and support together on field-fabricated trapeze pipe hangers. Pipes of Various Sizes: Support together and space trapezes for smallest pipe size or provide intermediate supports for smaller diameter pipes as specified for individual pipe hangers. Field fabricate from ASTM A 36/A 36M, carbon-steel shapes selected for loads being supported. Weld steel according to AWS D1.1/D1.1M.

C. Metal Framing System Installation: Provide per manufactures recommendations and calculations.

D. Thermal-Hanger Shield Installation: Provide in pipe hanger or shield for insulated piping.

E. Fastener System Installation: Provide powder-actuated fasteners for use in lightweight concrete or concrete slabs less than 4 inches thick in concrete after concrete is placed and completely cured. Use operators that are licensed by powder-actuated tool manufacturer. Provide fasteners according to powder-actuated tool manufacturer's operating manual. Provide mechanical-expansion anchors in concrete after concrete is placed and completely cured. Provide fasteners according to manufacturer's written instructions.

F. Roof Pipe Stand Installation: Provide per manufactures recommendations and calculations. Pipe Stand Types except Curb-Mounted Type: Assemble components and mount on smooth roof surface. Do not penetrate roof membrane. Curb-Mounted-Type Pipe Stands: Assemble components or fabricate pipe stand and mount on permanent, stationary roof curb.

G. Provide hangers and supports complete with necessary attachments, inserts, bolts, rods, nuts, washers, and other accessories.

H. Equipment Support Installation: Fabricate from welded-structural-steel shapes.

I. Provide hangers and supports to allow controlled thermal or seismic movement of piping systems, to permit freedom of movement between pipe anchors, and to facilitate action of expansion joints, expansion loops, expansion bends, and similar units.

J. Provide lateral bracing with pipe hangers and supports to prevent swaying.

K. Provide building attachments within concrete slabs or attach to structural steel. Provide additional attachments at concentrated loads, including valves, flanges, and strainers, NPS 2-1/2 and larger and at changes in direction of piping. Provide concrete inserts before concrete is placed; fasten inserts to forms and provide reinforcing bars through openings at top of inserts.

L. Provide allowances must be made for expansion and contraction of the piping system. Since changes in direction in the system are usually sufficient to allow for expansion and contraction, hangers must be placed so as not to restrict this movement

M. Pipe Slopes: Provide hangers and supports to provide indicated pipe slopes and to not exceed maximum pipe deflections allowed by plumbing code and ASME B31.9 for building services piping. Piping shall be supported in such a manner as to maintain its alignment and prevent sagging.

N. Support vertical runs at roof, at each floor, and at 10-foot intervals between floors.

O. Insulated Piping: Attach clamps and spacers to piping.

1. Piping Operating above Ambient Air Temperature: Clamp may project through insulation.
2. Piping Operating below Ambient Air Temperature: Use thermal-hanger shield insert with clamp sized to match OD of insert.

P. Equipment Supports: Fabricate structural-steel stands to suspend equipment from structure overhead or to support equipment above floor. Grouting: Place grout under supports for equipment and make bearing surface smooth. Provide lateral bracing, to prevent swaying, for equipment supports.

Q. Metal Fabrications: Cut, drill, and fit miscellaneous metal fabrications for trapeze pipe hangers and equipment supports. Fit exposed connections together to form hairline joints. Field weld connections that cannot be shop welded because of shipping size limitations. Field Welding: Comply with AWS D1.1/D1.1M procedures for shielded, metal arc welding; appearance and quality of welds; and methods used in correcting welding work. Use materials and methods that minimize distortion and develop strength and corrosion resistance of base metals. Obtain fusion without undercut or overlap. Remove welding flux immediately. Finish welds at exposed connections so no roughness shows after finishing and so contours of welded surfaces match adjacent contours.

R. Hanger Adjustments: Adjust hangers to distribute loads equally on attachments and to achieve indicated slope of pipe. Trim excess length of continuous-thread hanger and support rods to 1-1/2 inches.

S. Hanger and Support Schedule

1. Comply with MSS SP-69 for pipe-hanger selections and applications that are not specified in piping system Sections.
2. Comply with MSS SP-69 for trapeze pipe-hanger selections and applications that are not specified in piping system Sections.
3. Comply with MFMA-103 for metal framing system selections and applications that are not specified in piping system Sections.

T. Hanger Spacing

1. Support piping and tubing not listed below according to MSS SP-69 and manufacturer's written instructions.
2. Load Distribution: Provide hangers and supports so that piping live and dead loads and stresses from movement will not be transmitted to connected equipment. Space hangers according to pipe manufacturer's written instructions for service conditions. Avoid point loading.
3. Space and provide hangers with the fewest practical rigid anchor points.
4. Piping shall be supported at intervals sufficiently close to maintain correct pipe alignment and to prevent sagging or grade reversal.
5. Pipe shall be supported at all branch ends and at all changes of direction.
6. Provide hangers for steel piping with the following maximum horizontal spacing and minimum rod sizes:

a. NPS ¾ to 1: Maximum span, 6 feet; minimum rod size, 3/8 inch.
b. NPS 1-1/4: Maximum span, 8 feet; minimum rod size, 3/8 inch.
c. NPS 1-1/2: Maximum span, 9 feet; minimum rod size, 3/8 inch.
d. NPS 2: Maximum span, 10 feet; minimum rod size, 3/8 inch.
e. NPS 2-1/2 to 3: Maximum span, 10 feet; minimum rod size, 1/2 inch.
f. NPS 4 to 5: Maximum span, 10 feet; minimum rod size, 5/8 inch.
g. NPS 6 to 8: Maximum span, 10 feet; minimum rod size, 3/4 inch.
h. NPS 10 to 12: Maximum span, 10 feet; minimum rod size, 7/8 inch.

7. Provide hangers for copper piping with the following maximum horizontal spacing and minimum rod sizes:

a. NPS ½ and 3/4: Maximum span, 5 feet; minimum rod size, 1/4 inch.
b. NPS 1: Maximum span, 6 feet; minimum rod size, 1/4 inch.
c. NPS 1-1/4: Maximum span, 7 feet; minimum rod size, 3/8 inch.
d. NPS 1-1/2 to 2: Maximum span, 8 feet; minimum rod size, 3/8 inch.
e. NPS 2-1/2: Maximum span, 9 feet; minimum rod size, 3/8 inch.
f. NPS 3: Maximum span, 10 feet; minimum rod size, 3/8 inch.
g. NPS 4: Maximum span, 10 feet; minimum rod size, 1/2 inch.
h. Maximum vertical steel and copper pipe attachment spacing: 10 feet.

8. Provide hangers for cast-iron piping with the following maximum horizontal spacing and minimum rod diameters:

a. NPS 1-1/2 and NPS 2: 60 inches with 3/8-inch rod.
b. NPS 3: 60 inches with 1/2-inch rod.
c. NPS 4 to 5: 60 inches with 5/8-inch rod.
d. NPS 6 to 8: 60 inches with 3/4-inch rod.
e. NPS 10 to 12: 60 inches with 7/8-inch rod.
f. Spacing for 10-foot lengths may be increased to 10 feet. Spacing for fittings is limited to 60 inches.

9. Piping Hangers for Plastic Piping:
a. Hangers shall not compress, distort, cut or abrade the piping.
b. Hangers shall be placed next to the pipe joint not more than 18” from the point joint.
c. Maximum horizontal spacing and minimum rod diameters (pipe temperature 100°F or lower).
d. Solvent cemented PVC

1) NPS 2 and smaller: 48” with 3/8-inch rod.
2) NPS 2-1/2: 48” with 1/2-inch rod.
3) NPS 3: 48” with 1/2-inch rod.
4) NPS 4: 48” with 5/8-inch rod.
5) NPS 6: 48” with 3/4-inch rod.
6) NPS 8: 48” with 7/8-inch rod.
7) NPS 10: 48” with 7/8-inch rod.
8) NPS 12: 48” with 7/8-inch rod.

10. Provide supports for vertical piping every 10 feet.

3.7 VALVE INSTALLATION

A. Valves shall be installed in accordance with the manufacturer's recommendations.

B. Provide valves with unions or flanges at each piece of equipment arranged to allow service, maintenance, and equipment removal without system shutdown. Locate valves for easy access and provide separate support where necessary.

C. Provide valves in horizontal piping with stem at or above center of pipe.

D. Provide valves in position to allow full stem movement.

E. Provide strainers on supply side of each control valve and elsewhere as indicated or recommended by component manufacturer to have strainer protection. Provide valved drain and hose connection on strainer blow down connection.
   1. Provide with provisions for service clearance.
   2. Remove and clean strainer after 24 hours of operation and after 30 days of operation.

F. Control valves shall be installed so that they are accessible and serviceable and so that actuators may be services and removed without interference from structure or other pipes and/or equipment.

G. Isolation valves shall be installed so that the control valve body may be serviced without draining the supply/return side piping system. Unions shall be installed at all connections to screw-type control valves.

H. Provide check valves at each pump discharge and elsewhere as required to control flow direction.

I. Provide hose end drain valves for equipment, at base of each water riser, at low points in horizontal piping, and where required to drain water piping.

3.8 IDENTIFICATION

A. Provide equipment markers on each item of scheduled equipment. Data required for markers may be included on signs, and markers may be omitted if both are indicated. Locate markers where accessible and visible. Equipment located above the ceiling that requires servicing shall be labeled on the ceiling using a labeling machine.

   1. Letters shall be ¼" high, black.
   2. Label equipment above ceiling that requires servicing or access. Locate labels on the ceiling grid, adjacent to the ceiling tile that provides the best access to the valve or item that requires servicing.

B. Piping Identification:

1. Locate pipe labels where piping is exposed or above accessible ceilings in finished spaces; mechanical rooms; accessible maintenance spaces such as shafts and plenums; and exterior exposed locations as follows:

   a. Near each valve and control device.
   b. Near each branch connection, excluding short takeoffs for fixtures and terminal units. Where flow pattern is not obvious, mark each pipe at branch.
   c. Near penetrations and on both sides of through walls, floors, ceilings, and inaccessible enclosures.
   d. At access doors and similar access points that permit view of concealed piping.
   e. Near major equipment items and other points of origination and termination.
   f. Spaced at maximum intervals of 50 feet along each run. Reduce intervals to 25 feet in areas of congested piping and equipment.
   g. On piping above removable acoustical ceilings. Omit intermediately spaced labels.

2. Directional Flow Arrows: Arrows shall be provided to indicate direction of flow in pipes, including pipes where flow is allowed in both directions.
3. Apply “Electric Traced” labels to the outside of heat-traced insulation.

3.9 THERMOMETERS AND PRESSURE GAUGES

A. Provide thermometers and adjust vertical and tilted positions. Provide thermowells with extension on insulated piping. Provide separable sockets in vertical position in piping tees.

B. Provide pressure gauges in piping tees with pressure-gauge valve located on pipe at most readable position. Provide valve and snubber in piping for each pressure gage for fluids.

C. Calibrate according to manufacturer's written instructions, after installation.

D. Adjust faces to proper angle for best visibility. Clean windows and clean factory-finished surfaces. Replace cracked and broken windows, and repair scratched and marred surfaces with manufacturer's touchup paint.

3.10 INSULATION INSTALLATION

A. General Application Requirements

1. Ship insulation materials in containers marked by manufacturer with appropriate ASTM specification designation, type and grade, and maximum use temperature. All of the insulation materials and accessories covered by this specification shall be delivered to the job site and stored in a safe, dry place with appropriate labels and/or other product identification. Store tapes, adhesives, mastics, cements, and insulation materials in ambient conditions in accordance with the recommendations of the manufacturer. Follow manufacturer’s recommended handling practices. The contractor shall use whatever means are necessary to protect the insulation materials and accessories before, during, and after installation. No insulation material shall be installed that has become damaged in any way. The contractor shall also use all means necessary to protect work and

materials installed by other trades. Contractor shall take precaution to protect insulation. Any fiber glass insulation that becomes wet or torn should be replaced at no additional cost. Air handling insulation used in the air stream must be discarded if exposed to water

2. Examine substrates and conditions for compliance with requirements for installation tolerances and other conditions affecting performance of insulation application. Verify that systems to be insulated have been tested and are free of defects. Verify that surfaces to be insulated are clean and dry. Proceed with installation only after unsatisfactory conditions have been corrected. Before starting work under this section, carefully inspect the site and installed work of other trades and verify that such work is complete to the point where installation of materials and accessories under this section can begin. Ensure that all pipe and fitting surfaces over which insulation is to be installed are clean and dry. Ensure that insulation is clean, dry, and in good mechanical condition with all factory-applied vapor or weather barriers intact and undamaged. Wet, dirty, or damaged insulation shall not be acceptable for installation. Ensure that pressure testing of piping and fittings has been completed prior to installing insulation.
3. Installer Qualifications: Skilled mechanics shall have successfully completed an apprenticeship program or another craft training program.
4. Provide insulation materials, accessories, and finishes according to the manufacturer's written instructions; with smooth, straight, and even surfaces; free of voids throughout, including the length of ducts and fittings, valves, and specialties. Provide per "National Commercial & Industrial Insulation Standards" – MICA Manual.
5. Provide insulation materials, vapor barriers or retarders, jackets, and thicknesses required for each system as specified in insulation system schedules.
6. Provide accessories compatible with insulation materials and suitable for the service.
7. Provide insulation with longitudinal seams at top and bottom of horizontal pipe runs and equipment. Provide multiple layers of insulation with longitudinal and end seams staggered.
8. There shall be no glass fibers exposed to the air. Bond seams and joints with adhesive recommended by the insulation material manufacturer.
9. Do not weld brackets, clips, or other attachment devices to piping, fittings, and specialties.
10. Seal joints and seams with vapor-retarder mastic on insulation indicated to receive a vapor retarder.
11. Keep insulation materials dry during application and finishing.
12. Provide insulation over fittings, valves, and specialties, with continuous thermal and least number of joints practical.
13. Provide removable insulation covers at fittings and equipment that require servicing and locations with service requirements.
14. Locate seams in the least visible location.
15. All cold surfaces that may “sweat” must be insulated. Vapor barrier must be maintained, insulation shall be applied with a continuous, unbroken moisture and vapor seal. All hangers, supports, anchors, or other projections that are secured to cold surfaces shall be insulated and vapor sealed to prevent condensation.
16. Where vapor barrier is indicated, seal joints, seams, and penetrations in insulation at hangers, supports, anchors, and other projections with vapor-barrier mastic. Provide insulation continuously through hangers and specialties around anchor attachments. Extend insulation on anchor legs from point of attachment to supported item to point of attachment to structure. Taper and seal ends at attachment to structure with vapor-barrier mastic. Provide insert materials and provide insulation to tightly join the insert. Seal insulation to insulation inserts with adhesive or sealing compound recommended by insulation material manufacturer.

17. For above-ambient services, do not install insulation to the following: testing agency labels and stamps, nameplates, and cleanouts.
18. Insulation thicknesses and installations shall meet or exceed the requirements of the local energy code, or thicknesses indicated, whichever is of superior insulating performance. If piping type is omitted from list below, provide insulation per energy code or as per similar duty.
19. Apply adhesives, mastics, and sealants at manufacturer's recommended coverage rate and wet and dry film thicknesses.
20. Provide insulation with factory-applied jackets as follows:

    a. Draw jacket tight and smooth.
    b. Cover circumferential joints with 3-inch- wide strips, of same material as insulation jacket. Secure strips with adhesive and outward clinching staples along both edges of strip, spaced 4 inches o.c.
    c. Overlap jacket longitudinal seams at least 1-1/2 inches. Clean and dry surface to receive self-sealing lap. Staple laps with outward clinching staples along edge at 2 inches o.c. For below ambient services, apply vapor-barrier mastic over staples.
    d. Cover joints and seams with tape, according to insulation material manufacturer's written instructions, to maintain vapor seal.
    e. Where vapor barriers are indicated, apply vapor-barrier mastic on seams and joints and at ends adjacent to duct flanges and fittings.

21. Cut insulation in a manner to avoid compressing insulation more than 75 percent of its nominal thickness.
22. Insulate instrument connections for specialties (examples: thermometers, sensors, etc.) on insulated pipes. Shape insulation at these connections by tapering it to and around the connection with insulating cement and finish with finishing cement, mastic, and flashing sealant.
23. Finish installation with systems at operating conditions. Repair joint separations and cracking due to thermal movement.
24. Repair damaged insulation facings by applying same facing material over damaged areas. Extend patches at least 4 inches beyond damaged areas. Adhere, staple, and seal patches similar to butt joints.

B. Insulation Installation at Interior Wall and Partition Penetrations (That Are Not Fire Rated): Provide insulation continuously through walls and partitions.

C. Insulation Installation at Roof or Aboveground Exterior Wall Penetrations: Provide insulation continuously through penetrations.

1. Seal penetrations with flashing sealant.
2. For applications requiring only indoor insulation, terminate insulation above roof/wall surface and seal with joint sealant. For applications requiring indoor and outdoor insulation, provide insulation for outdoor applications tightly joined to indoor insulation ends. Seal joint with joint sealant.
3. Extend jacket of outdoor insulation outside roof/wall flashing at least 2 inches below top of roof flashing.
4. Seal jacket to roof/wall flashing with flashing sealant.

D. Insulation Installation at Fire-Rated Penetrations:

1. Fire Dampers: Terminate insulation at fire damper sleeves for fire-rated wall and partition penetrations. Externally insulate damper sleeves to match adjacent insulation and overlap duct insulation at least 2 inches.
2. Pipe or duct penetrations (no fire damper): Provide insulation continuously through penetrations of fire-rated walls and partitions. Comply with requirements in Division 7 for firestopping and fire-resistive joint sealers.

E. Jackets And Finishes

1. Where PVC jackets are indicated, provide with 1-inch overlap at longitudinal seams and end joints; for horizontal applications. Seal with manufacturers recommended adhesive. Apply two continuous beads of adhesive to seams and joints, one bead under lap and the finish bead along seam and joint edge.
2. Where metal jackets are indicated, provide with 2-inch overlap at longitudinal seams and end joints. Overlap longitudinal seams arranged to shed water. Seal end joints with weatherproof sealant recommended by insulation manufacturer. Secure jacket with stainless-steel bands 12 inches o.c. and at end joints.
3. Flexible Elastomeric: After adhesive has fully cured, apply two coats of insulation manufacturer's recommended protective coating. Prior to applying the finish, the insulation shall be wiped clean with denatured alcohol. The finish shall not be tinted. To insure good adhesion, the temperature should be above 50°F during application and drying.
4. Outdoor exposed piping shall be painted with two coats of Armaflex WB Finish. Prior to applying the Finish, the insulation shall be wiped clean with denatured alcohol. The Finish shall not be tinted. Outdoor exposed piping shall have the seams located on the lower half of the pipe.
5. Pipe Insulation with ASJ, Glass-Cloth, or other paintable jacket material: Paint jacket with paint system identified below and as specified in Division 9.
6. Color: Final color as selected by Architect. Vary first and second coats to allow visual inspection of the completed Work.

F. Installation Of Piping Insulation

1. Metal shields shall be provided between hangers or supports and the piping insulation.
2. Insulation Installation on Fittings, Valves, Strainers, Flanges, and Unions:

   a. Provide insulation over fittings, valves, strainers, flanges, unions, and other specialties with continuous thermal and vapor-retarder integrity unless otherwise indicated.
   b. Insulate pipe elbows using preformed fitting insulation or mitered fittings made from same material and density as adjacent pipe insulation. Each piece shall be butted tightly against adjoining piece and bonded with adhesive. Fill joints, seams, voids, and irregular surfaces with insulating cement finished to a smooth, hard, and uniform contour that is uniform with adjoining pipe insulation.
   c. Insulate tee fittings with preformed fitting insulation or sectional pipe insulation of same material and thickness as used for adjacent pipe. Cut sectional pipe insulation to fit. Butt each section closely to the next and hold in place with tie wire. Bond pieces with adhesive.

d. Insulate valves using preformed fitting insulation or sectional pipe insulation of same material, density, and thickness as used for adjacent pipe. Overlap adjoining pipe insulation by not less than two times the thickness of pipe insulation, or one pipe diameter, whichever is thicker. For valves, insulate up to and including the bonnets, valve stuffing-box studs, bolts, and nuts. Fill joints, seams, and irregular surfaces with insulating cement.

e. Insulate strainers using preformed fitting insulation or sectional pipe insulation of same material, density, and thickness as used for adjacent pipe. Overlap adjoining pipe insulation by not less than two times the thickness of pipe insulation, or one pipe diameter, whichever is thicker. Fill joints, seams, and irregular surfaces with insulating cement. Insulate strainers so strainer basket flange or plug can be easily removed and replaced without damaging the insulation and jacket. Provide a removable reusable insulation cover. For below-ambient services, provide a design that maintains vapor barrier.

f. Insulate flanges and unions using a section of oversized preformed pipe insulation. Overlap adjoining pipe insulation by not less than two times the thickness of pipe insulation, or one pipe diameter, whichever is thicker.

g. Cover segmented insulated surfaces with a layer of finishing cement and coat with a mastic. Provide vapor-barrier mastic for below-ambient services and a breather mastic for above-ambient services. Reinforce the mastic with fabric-reinforcing mesh. Trowel the mastic to a smooth and well-shaped contour.

h. For services not specified to receive a field-applied jacket except for flexible elastomeric, provide fitted PVC cover over elbows, tees, strainers, valves, flanges, and unions. Terminate ends with PVC end caps. Tape PVC covers to adjoining insulation facing using PVC tape.

3. Flexible Elastomeric Insulation

a. Seal longitudinal seams and end joints with manufacturers recommended adhesive to eliminate openings in insulation that allow passage of air to surface being insulated.

b. Insulation Installation on Pipe Flanges: Provide pipe insulation to outer diameter of pipe flange. Make width of insulation section same as overall width of flange and bolts, plus twice the thickness of pipe insulation. Fill voids between inner circumference of flange insulation and outer circumference of adjacent straight pipe segments with cut sections of sheet insulation of same thickness as pipe insulation. Secure insulation to flanges and seal seams with manufacturers recommended adhesive to eliminate openings in insulation that allow passage of air to surface being insulated.

c. Insulation Installation on Pipe Fittings and Elbows: Provide mitered sections of pipe insulation. Secure insulation materials and seal seams with manufacturer's recommended adhesive to eliminate openings in insulation that allow passage of air to surface being insulated.

d. Insulation Installation on Valves and Pipe Specialties: Provide preformed valve covers manufactured of same material as pipe insulation when available. When preformed valve covers are not available, provide cut sections of pipe and sheet insulation to valve body. Arrange insulation to permit access to packing and to allow valve operation without disturbing insulation. Provide insulation to flanges as specified for flange insulation application. Secure insulation to valves and specialties and seal seams with manufacturer's recommended adhesive to eliminate openings in insulation that allow passage of air to surface being insulated.

4. Application schedules identify piping system and indicate pipe size ranges and material, thickness, and jacket requirements. For piping systems not indicated, insulate to with a similar thickness and type as those specified.
5. Provide PVC jackets in the following locations:

    a. For piping exposed in mechanical rooms within 6 feet above finished floor or high traffic areas.
    b. Exposed vertical piping in finished spaces.

6. Piping where heat tracing is provided:

    a. Pipe size 2-1/2” and less: Glass Fiber, 1-½” thickness; Jacket: Aluminum.
    b. Pipe size 3” and larger: Glass Fiber, 2” thickness; Jacket: Aluminum.

7. Domestic cold water: Glass Fiber, ½” thickness.
8. Rainwater conductors: Glass Fiber, 1” thickness. Provide for all horizontal piping and any vertical piping within 10 feet of the roof drain. Alternative: Roof drain bowls may be insulated with 2” of closed-cell spray-foam provided by Division 7. Coordinate with Division 7.
9. Roof Drain Bodies: Flexible Elastomeric, ½” thickness.
10. AC pan drain or other cold drain piping: Flexible Elastomeric, ½” thickness.

11. Refrigerant suction or hot gas piping: Flexible Elastomeric, 1.5” thickness.
12. Ductless split: ½” Armaflex for liquid and gas piping. Coordinate with Section 23 81 30, insulated line kits may be furnished.

13. Heating hot water supply and return:

    a. Pipe size 1-1/4” and less: Glass Fiber; 1-1/2” thickness.
    b. Pipe size 1-1/2” and larger: Glass Fiber; 2” thickness.
    c. Insulation is not required for exposed piping through floor for convectors and radiators.
    d. Insulation is not required strainers, control valves, unions, and balancing valves associated with piping 1” or less diameter. Insulate piping to within approximately 3/4-inch of un-insulated items.

G. Installation of Ductwork Insulation

1. Flexible Fiberglass Blanket Insulation Installation:

    a. Secure with adhesive and insulation pins. Apply adhesives according to manufacturer's recommended coverage rates per unit area, for 100 percent coverage of duct and plenum surfaces. Apply adhesive to entire circumference of ducts and to all surfaces of fittings and transitions.
    b. Firmly butt all joints.
    c. Provide either capacitor-discharge-weld pins and speed washers or cupped-head, capacitor-discharge-weld pins on sides and bottom of horizontal ducts and sides of vertical ducts.
    d. Overlap unfaced blankets a minimum of 2 inches on longitudinal seams and end joints. At end joints, secure with steel bands spaced a maximum of 18 inches o.c.

e. Provide insulation on rectangular duct elbows and transitions with a full insulation section for each surface. Provide insulation on round and flat-oval duct elbows with individually mitered gores cut to fit the elbow.
f. Insulate duct stiffeners, hangers, and flanges that protrude beyond insulation surface with 6-inch- wide strips of same material used to insulate duct. Secure on alternating sides of stiffener, hanger, and flange with pins spaced 6 inches o.c.

2. Board Insulation Installation on Ducts and Plenums: Secure with adhesive and insulation pins.

   a. Apply adhesives according to manufacturer's recommended coverage rates per unit area, for 100 percent coverage of duct and plenum surfaces. Apply adhesive to entire circumference of ducts and to all surfaces of fittings and transitions.
   b. Provide either capacitor-discharge-weld pins and speed washers or cupped-head, capacitor-discharge-weld pins on sides and bottom of horizontal ducts and sides of vertical ducts.
   c. Provide insulation on rectangular duct elbows and transitions with a full insulation section for each surface. Groove and score insulation to fit as closely as possible to outside and inside radius of elbows. Provide insulation on round and flat-oval duct elbows with individually mitered gores cut to fit the elbow.
   d. Insulate duct stiffeners, hangers, and flanges that protrude beyond insulation surface with 6-inch- wide strips of same material used to insulate duct. Secure on alternating sides of stiffener, hanger, and flange with pins spaced 6 inches o.c.

3. For ducts and plenums with surface temperatures below ambient, provide a continuous unbroken vapor barrier. Create a facing lap for longitudinal seams and end joints with insulation by removing 2 inches from one edge and one end of insulation segment. Secure laps to adjacent insulation section with 1/2-inch outward-clinching staples, 1 inch o.c. Provide vapor barrier consisting of factory- or field-applied jacket, adhesive, vapor-barrier mastic, and sealant at joints, seams, and protrusions. Repair punctures, tears, and penetrations with tape or mastic to maintain vapor-barrier seal. Provide vapor stops for ductwork and plenums operating below 50°F at 18-foot intervals. Vapor stops shall consist of vapor-barrier mastic applied in a Z-shaped pattern over insulation face, along butt end of insulation, and over the surface. Cover insulation face and surface to be insulated a width equal to two times the insulation thickness, but not less than 3 inches.
4. Fire-rated insulation system installation: Where fire-rated insulation system is indicated, secure system to ducts and duct hangers and supports to maintain a continuous fire rating. Insulate duct access panels and doors to achieve same fire rating as duct.
5. For duct systems not indicated, insulate to with a similar thickness and type as those specified. Insulation thicknesses and installations shall meet or exceed the requirements of the local energy code, or thicknesses indicated, whichever is of superior insulating performance.
6. Items Not Insulated: Unless otherwise indicated, do not apply insulation to the following systems, materials, and equipment: Flex connectors, metal ducts with duct liner, factory-insulated flexible ducts, factory-insulated plenums, casings, and access doors.
7. Supply Ducts:

   a. Concealed: Flexible Fiber Glass Blanket; 1.5” thickness.
   b. Exposed to heated or non-air conditioned spaces: Flexible Fiber Glass Blanket; 1.5” thickness.

c. Exposed to Air-Conditioned Space: None
d. Exposed to return air plenums: None

8. Return ducts within conditioned space: None required.
9. Boiler direct vent combustion air: R-6.1, 1.5” thickness.

H. Installation of Equipment/ Tank Insulation

1. For equipment not indicated, insulate to with a similar thickness and type as those specified.
2. Provide insulation over entire surface of tanks and vessels. Apply 100 percent coverage of adhesive to surface with manufacturer's recommended adhesive. Seal longitudinal seams and end joints.
3. For Equipment insulation exposed in mechanical rooms or subject to mechanical abuse, finish with minimum 0.020 inch thick PVC jacketing or metal or laminated self-adhesive water and weather seals. All other insulation shall be finished as appropriate for the location and service or as specified on the drawings.
4. For below ambient services, provide a vapor barrier at seams, joints, and penetrations. Seal between flanges with replaceable gasket material to form a vapor barrier.
5. Fiber Glass: Apply insulation to the equipment surface with joints firmly butted and as close as possible to the equipment surface. Insulation shall be secured as required with mechanical fasteners or banding material. Fasteners shall be located a maximum of 3″ from each edge and spaced no greater than 12″ on center. For below ambient systems, vapor retarder jacketing shall overlap a minimum of 2″ at all seams and be sealed with appropriate pressure-sensitive tape or mastic. All penetrations and facing damage shall be covered with a minimum 2″ overlap of tape or mastic.
6. Flexible Elastomeric: Provide insulation over entire surface of tanks and vessels. Apply 100 percent coverage of adhesive to surface with manufacturer's recommended adhesive. Seal longitudinal seams and end joints.
7. Omit insulation from the following, except for cold surfaces, which shall be provided with removable covers:

   a. Hot water expansion tanks
   b. Hot water pumps
   c. Vibration-control devices.
   d. Testing agency labels and stamps.
   e. Nameplates and data plates.
   f. Manholes, hand holes, or cleanouts.

8. Removable Covers for Maintenance Access: Construct insulation on parts of equipment such as chilled water pumps; or other equipment which must be opened periodically for maintenance or repair, so insulation can be removed and replaced without damage. Use ¾” flexible elastomeric insulation.
9. Cooling & heating air separators, low loss headers, chemical feed tanks, buffer tanks and similar equipment: same as water piping.
10. Hot equipment not factory insulated: Heating hot-water heat exchangers; steam-to-water converters; flash tanks, etc.; Insulation Material: Calcium Silicate or Pipe & Tank Insulation, 2” thickness.

3.11 ERECTION OF SUPPORTS AND ANCHORAGES

A. Fasten wall-hanging items securely to supports attached to building substrate if supports are specified and to building wall construction if no support is indicated. Fasten recessed-type items to reinforcement built into walls.

B. Wood: Cut, fit, and place wood grounds, nailers, blocking, and anchorages to support, and anchor materials and equipment. Select fastener sizes that will not penetrate members if opposite side will be exposed to view or will receive finish materials. Tighten connections between members. Provide fasteners without splitting wood members. Attach to substrates as required to support applied loads.

C. Metal: Provide in accordance with Division 5. Cut, fit, and place miscellaneous metal supports accurately in location, alignment, and elevation to support and anchor materials and equipment. Field Welding: Comply with AWS D1.1.

D. Grouting: Provide in accordance with Division 3. Mix and provide grout for equipment base bearing surfaces, pump and other equipment base plates, and anchors. Clean surfaces that will come into contact with grout. Provide forms as required for placement of grout. Avoid air entrapment during placement of grout. Place grout, completely filling equipment bases. Place grout on concrete bases and provide smooth bearing surface for equipment. Place grout around anchors. Cure placed grout.

3.12 FIRESTOPPING

A. Provide through-penetration firestop systems. Refer to Division 7 for materials. Seal penetrations through fire-or smoke-rated wall, partition, ceiling, or roof assemblies with firestopping systems. Refer to Architectural plans for location of rated assemblies.

3.13 PAINTING

A. Painting of plumbing and mechanical systems, equipment, and components is specified in Division 9.

B. Damage and Touchup: Repair marred and damaged factory-painted finishes with materials and procedures to match original factory finish.

3.14 CONCRETE HOUSEKEEPING PADS

A. Provide in accordance with Division 3.

B. Coordinate size, thickness, doweling, and reinforcing of concrete equipment housekeeping pads and piers with equipment manufacturer to ensure adequate space, embedment and prevent edge breakout failures.

C. Construct concrete bases not less than 4 inches larger in both directions than supported unit.

D. Housekeeping Pads must be adequately reinforced and adequately sized for proper installation of equipment anchors. Refer to seismic restraint manufacturer's written instructions.

E. Provide 4" high (+/-) housekeeping pads for the following:

1. Base Mounted Pumps
2. Expansion Tanks
3. As noted on plans
4. As recommended by Equipment manufacturer.

3.15 ROOFING

A. Refer to Division 7.

B. Coordinate installation of roof curbs, equipment supports, and roof penetrations.

3.16 PROJECT CLOSEOUT

A. Starting and Adjusting

1. Start equipment and operating components to confirm proper operation. Remove malfunctioning units, replace with new units, and retest.
2. Adjust equipment for proper operation. Adjust operating components for proper operation without binding.
3. Test each piece of equipment to verify proper operation. Test and adjust controls and safeties. Replace damaged and malfunctioning controls and equipment.

B. Provide Demonstration and Training in accordance Division 1.

C. Provide Project Record Documents in accordance with Division 1.

D. Follow Closeout procedures as per Division 1.

E. Provide Operation and Maintenance information in accordance with Division 1. In addition, provide the following.

1. An O&M manual describing basic data relating to the operation and maintenance of systems and equipment as provided.
2. HVAC control information consisting of diagrams, schedules, control sequence narratives, and maintenance and/or calibration information.
3. TAB report
4. Construction drawings of record, control drawings and final design drawings.

END OF SECTION

SECTION 23 05 33 - HEAT TRACING FOR PIPING

PART 1 - GENERAL

1.1 RELATED DOCUMENTS

A. Drawings and general provisions of the Contract, including General and Supplementary Conditions and Division 01 Specification Sections, apply to this Section.

B. Related Sections include the following:

1. Section: “Common Work Results”
2. Section 23 07 00 “Mechanical Insulation”.

1.2 SUMMARY

A. Section includes heat tracing for piping.

1.3 ACTION SUBMITTALS

A. Product Data: For each type of product.

1. Include rated capacities, operating characteristics, and furnished specialties and accessories.
2. Schedule heating capacity, length of cable, spacing, and electrical power requirement for each electric heating cable required.
3. Include plans, elevations, sections, and attachment details.
4. Include diagrams for power, signal, and control wiring.

1.4 CLOSEOUT SUBMITTALS

A. Operation and Maintenance Data: For electric heating cables to include in operation and maintenance manuals.

1.5 WARRANTY

A. Special Warranty: Manufacturer agrees to repair or replace electric heating cable that fails in materials or workmanship within specified warranty period. Warranty Period: Five years from date of Substantial Completion.

PART 2 - PRODUCTS

2.1 ELECTRICAL HEAT TRACING SYSTEM

A. The heating cable shall be XL-Trace cable as manufactured by Raychem Corporation, or approved equal. Voltage: 120/1/60.

B. Comply with IEEE 515.1 “Standard for the Testing, Design, Installation, and Maintenance of Electrical Resistance Trace Heating for Commercial Applications”.

C. The self-regulating heating cable shall consist of two (2) 16 AWG nickel-copper bus wires embedded in parallel in a self-regulating polymer core that varies its power output to respond to temperature all along its length, allowing the heating cable to be cut to length in the field. The heating cable shall be covered by a radiation-cross-linked, modified polyolefin dielectric jacket. To provide a ground path and to enhance the heating cable’s ruggedness, the heating cable shall have a braid of tinned copper and an outer jacket per section 427-23 of the NEC-1996.

D. All heating-cable components shall be UL Listed for use as part of the system to provide pipe freeze protection. Component enclosures shall be rated NEMA 4X to prevent water ingress and corrosion. Installation shall not require the installing contractor to cut into the heating-cable core to expose the bus wires. Connection systems that require the installing contractor to strip the bus wires or that us crimps or terminal blocks, shall not be acceptable. All components that make an electrical connection shall be re-enterable for servicing. No component shall use silicone to seal the electrical connections. An exception will be made in areas where a conduit transition is required.

E. Provide sufficient cable, as recommended by the manufacturer, to keep the pipe surface at 40°F minimum at -10°F winter outdoor design temperature.

1. Domestic Cold Water (where indicated on the plans): 8 watts/foot

2. Waste traps in unconditioned space: 8 watts/foot

F. Provide Accessories

1. Rayclic-PC power connection and end seal
2. Rayclic fast connection system
3. DigiTrace 1pt controller
4. RTD with 10 ft flexible armor
5. Electric Traced Label
6. Glass tape

PART 3 - EXECUTION

3.1 EXAMINATION

A. Examine surfaces and substrates to receive electric heating cables for compliance with requirements for installation tolerances and other conditions affecting performance.

B. Ensure surfaces and pipes in contact with electric heating cables are free of burrs and sharp protrusions.

C. Proceed with installation only after unsatisfactory conditions have been corrected.

3.2 INSTALLATION

A. The system shall be installed according to the drawings and the manufacturer’s instructions. The installer shall be responsible for providing a functional system, installed in accordance with applicable national and local requirements. Provide electric heating cable across expansion joints according to manufacturer's written instructions; use slack cable to allow movement without damage to cable.

B. Provide electric heating cables after piping has been tested and before insulation is installed.

C. Plumber shall purchase material, and shall be responsible for entire system, including testing before and after insulation. Installation, including all splices, tees and end terminations, shall be performed by plumbing contractor, with the exception of any power connections, which shall be installed and connected to power by the electrical sub-contractor.

D. Provide electric heating cables according to IEEE 515.1.

E. Provide coverage for piping, fittings, etc. exposed to freezing temperatures.

F. Apply the heating cable linearly on the pipe after piping has been successfully pressure-tested. Secure the heating cable to piping with cable ties or fiberglass tape.

G. Apply “Electric Traced” labels to the outside of the thermal insulation.

3.3 CONNECTIONS

A. Ground equipment according to Division 26.

B. Connect wiring according to Division 26. Each circuit shall be protected with a 30 mA Ground-Fault protection device.

3.4 FIELD QUALITY CONTROL

A. Manufacturer's Field Service: Engage a factory-authorized service representative to test and inspect components, assemblies, and equipment installations, including connections.

B. Perform the following tests and inspections with the assistance of a factory-authorized service representative:

1. Perform tests after cable installation but before application of coverings such as insulation, wall or ceiling construction, or concrete.
2. Test cables for electrical continuity and insulation integrity before energizing.
3. Set field-adjustable switches and circuit-breaker trip ranges.

4. Test cables to verify rating and power input. Energize and measure voltage and current simultaneously.

C. Repeat tests for continuity, insulation resistance, and input power after applying thermal insulation on pipe-mounted cables.

D. Cables will be considered defective if they do not pass tests and inspections.

E. Prepare test and inspection reports.

3.5 PROTECTION

A. Protect installed heating cables, including non-heating leads, from damage during construction.

B. Remove and replace damaged heat-tracing cables.

END OF SECTION

SECTION 23 05 93 - TESTING, ADJUSTING, AND BALANCING

PART 1 - GENERAL

1.1 RELATED DOCUMENTS

A. Drawings and general provisions of the Contract, including General and Supplementary Conditions and Division 01 Specification Sections, apply to this Section.

B. Related Sections include the following:

1. Division Section: “Common Work Results”

1.2 SUMMARY

A. Section includes Testing, Adjusting, and Balancing.

1.3 INFORMATIONAL SUBMITTALS

A. Qualification Data: Within 30 days of Contractor's Notice to Proceed, submit documentation that the TAB specialist and this Project's TAB team members meet the qualifications specified in "Quality Assurance" Article.

B. TAB reports.

C. Sample report forms.

D. Instrument calibration reports.

1.4 QUALITY ASSURANCE

A. Instrumentation Type, Quantity, Accuracy, and Calibration: Comply with requirements in ASHRAE 111, Section 4, "Instrumentation."

B. ASHRAE Compliance: Applicable requirements in ASHRAE 62.1, Section 7.2.2 - "Air Balancing."

C. ASHRAE/IESNA Compliance: Applicable requirements in ASHRAE/IESNA 90.1, Section 6.7.2.3 - "System Balancing."

PART 2 - PRODUCTS (Not Applicable)

PART 3 - EXECUTION

3.1 EXAMINATION

A. Examine the Contract Documents to become familiar with Project requirements and to discover conditions in systems designs that may preclude proper TAB of systems and equipment.

B. Examine installed systems for balancing devices, such as test ports, gauge cocks, thermometer wells, flow-control devices, balancing valves and fittings, and manual volume dampers. Verify that locations of these balancing devices are applicable for intended purpose and are accessible.

C. Examine the approved submittals for HVAC systems and equipment.

D. Examine design data, including HVAC system descriptions, statements of design assumptions for environmental conditions and systems output, and statements of philosophies and assumptions about HVAC system and equipment controls.

E. Examine equipment performance data, including fan and pump curves.

1. Relate performance data to Project conditions and requirements, including system effects that can create undesired or unpredicted conditions that cause reduced capacities in all or part of a system.
2. Calculate system-effect factors to reduce performance ratings of HVAC equipment when installed under conditions different from the conditions used to rate equipment performance. To calculate system effects for air systems, use tables and charts found in AMCA 201, "Fans and Systems," or in SMACNA's "HVAC Systems - Duct Design." Compare results with the design data and installed conditions.

F. Examine system and equipment installations and verify that field quality-control testing, cleaning, and adjusting specified in individual Sections have been performed.

G. Examine test reports specified in individual system and equipment Sections.

H. Examine HVAC equipment and verify that bearings are greased, filters are clean, and equipment with functioning controls is ready for operation.

I. Examine terminal units, such as variable-air-volume boxes, and verify that they are accessible and their controls are connected and functioning.

J. Examine control valves for proper installation for their intended function of isolating, throttling, diverting, or mixing fluid flows.

K. Examine heat-transfer coils for correct piping connections and for clean and straight fins.

L. Examine system pumps to ensure absence of entrained air in the suction piping.

M. Examine operating safety interlocks and controls on HVAC equipment.

N. Examine control dampers for proper installation for their intended function of isolating, throttling, diverting, or mixing air flows.

O. Report deficiencies discovered before and during performance of TAB procedures. Observe and record system reactions to changes in conditions. Record default set points if different from indicated values.

3.2 PREPARATION

A. Prepare a TAB plan that includes the following:

1. Equipment and systems to be tested.
2. Strategies and step-by-step procedures for balancing the systems.
3. Instrumentation to be used.
4. Sample forms with specific identification for all equipment.

B. Perform system-readiness checks of HVAC systems and equipment to verify system readiness for TAB work. Include, at a minimum, the following:

1. Airside:

a. Verify that leakage and pressure tests on air distribution systems have been satisfactorily completed.
b. Duct systems are complete with terminals installed.
c. Volume, smoke, and fire dampers are open and functional.
d. Clean filters are installed.
e. Fans are operating, free of vibration, and rotating in correct direction.
f. Variable-frequency controllers' startup is complete and safeties are verified.
g. Automatic temperature-control systems are operational.
h. Ceilings are installed.
i. Windows and doors are installed.
j. Suitable access to balancing devices and equipment is provided.

2. Hydronics:

a. Verify leakage and pressure tests on water distribution systems have been satisfactorily completed.
b. Piping is complete with terminals installed.
c. Water treatment is complete.
d. Systems are flushed, filled, and air purged.
e. Strainers are pulled and cleaned.
f. Control valves are functioning in accordance with the sequence of operation.
g. Shutoff and balance valves have been verified to be 100 percent open.
h. Pumps are started and proper rotation is verified.
i. Pump gauge connections are installed directly at pump inlet and outlet flanges or in discharge and suction pipe prior to valves or strainers.
j. Variable-frequency controllers' startup is complete and safeties are verified.
k. Suitable access to balancing devices and equipment is provided.

3.3 GENERAL PROCEDURES FOR TESTING AND BALANCING

A. Perform testing and balancing procedures on each system in accordance with the procedures contained in AABC's "National Standards for Total System Balance" and in this Section.

B. Cut insulation, ducts, pipes, and equipment casings for installation of test probes to the minimum extent necessary for TAB procedures.

1. After testing and balancing, patch probe holes in ducts with same material and thickness as used to construct ducts.
2. Where holes for probes are required in piping or hydronic equipment, install pressure and temperature test plugs to seal systems.
3. Install and join new insulation that matches removed materials. Restore insulation, coverings, vapor barrier, and finish in accordance with Section 23 05 00 “Common Work Results”.

C. Mark equipment and balancing devices, damper-control positions, and similar controls and devices, with paint or other suitable, permanent identification material to show final settings.

3.4 TESTING, ADJUSTING, AND BALANCING OF EQUIPMENT

A. Test, adjust, and balance HVAC equipment.

3.5 GENERAL PROCEDURES FOR BALANCING AIR SYSTEMS

A. Prepare test reports for both fans and outlets. Obtain manufacturer's outlet factors and recommended testing procedures. Crosscheck the summation of required outlet volumes with required fan volumes.

B. Prepare schematic diagrams of systems' Record drawings duct layouts.

C. For variable-air-volume systems, develop a plan to simulate diversity.

D. Determine the best locations in main and branch ducts for accurate duct-airflow measurements.

E. Check airflow patterns from the outdoor-air louvers and dampers and the return- and exhaust-air dampers through the supply-fan discharge and mixing dampers.

F. Locate start-stop and disconnect switches, electrical interlocks, and motor starters.

G. Verify that motor starters are equipped with properly sized thermal protection.

H. Check dampers for proper position to achieve desired airflow path.

I. Check for airflow blockages.

J. Check condensate drains for proper connections and functioning.

K. Check for proper sealing of air-handling-unit components.

3.6 PROCEDURES FOR VARIABLE-AIR-VOLUME SYSTEMS

A. Adjust the variable-air-volume systems as follows:

1. Verify that the system static pressure sensor is located two-thirds of the distance down the duct from the fan discharge.
2. Verify that the system is under static pressure control.
3. Select the terminal unit that is most critical to the supply-fan airflow. Measure inlet static pressure, and adjust system static pressure control set point so the entering static pressure for the critical terminal unit is not less than the sum of the terminal-unit manufacturer's recommended minimum inlet static pressure plus the static pressure needed to overcome terminal-unit discharge system losses.
4. Calibrate and balance each terminal unit for maximum and minimum design airflow as follows:

    a. Adjust controls so that terminal is calling for maximum airflow. Some controllers require starting with minimum airflow. Verify calibration procedure for specific project.
    b. Measure airflow and adjust calibration factor as required for design maximum airflow. Record calibration factor.
    c. When maximum airflow is correct, balance the air outlets downstream from terminal units.
    d. Adjust controls so that terminal is calling for minimum airflow.
    e. Measure airflow and adjust calibration factor as required for design minimum airflow. Record calibration factor. If no minimum calibration is available, note any deviation from design airflow.
    f. On constant volume terminals, in critical areas where room pressure is to be maintained, verify that the airflow remains constant over the full range of full cooling to full heating. Note any deviation from design airflow or room pressure.

5. After terminals have been calibrated and balanced, test and adjust system for total airflow. Adjust fans to deliver total design airflows within the maximum allowable fan speed listed by fan manufacturer.

    a. Set outside-air, return-air, and relief-air dampers for proper position that simulates minimum outdoor-air conditions.
    b. Set terminals for maximum airflow. If system design includes diversity, adjust terminals for maximum and minimum airflow, so that connected total matches fan selection and simulates actual load in the building.
    c. Where duct conditions allow, measure airflow by main Pitot-tube traverse. If necessary, perform multiple Pitot-tube traverses close to the fan and prior to any outlets, to obtain total airflow.
    d. Where duct conditions are unsuitable for Pitot-tube traverse measurements, a coil traverse may be acceptable.

6. Measure fan static pressures as follows:

    a. Measure static pressure directly at the fan outlet or through the flexible connection.
    b. Measure static pressure directly at the fan inlet or through the flexible connection.

c. Measure static pressure across each component that makes up the air-handling system.
d. Report any artificial loading of filters at the time static pressures are measured.

7. Set final return and outside airflow to the fan while operating at maximum return airflow and minimum outdoor airflow.

a. Balance the return-air ducts and inlets.
b. Verify that terminal units are meeting design airflow under system maximum flow.

8. Re-measure the inlet static pressure at the most critical terminal unit, and adjust the system static pressure set point to the most energy-efficient set point to maintain the optimum system static pressure. Record set point and give to controls Contractor.
9. Verify final system conditions as follows:

a. Re-measure and confirm that minimum outdoor, return, and relief airflows are within design. Readjust to match design if necessary.
b. Re-measure and confirm that total airflow is within design.
c. Re-measure final fan operating data, speed, volts, amps, and static profile.
d. Mark final settings.

3.7 GENERAL PROCEDURES FOR HYDRONIC SYSTEMS

A. Prepare test reports for pumps, coils, and other equipment. Obtain approved submittals and manufacturer-recommended testing procedures. Crosscheck the summation of required coil and equipment flow rates with pump design flow rate.

B. Prepare schematic diagrams of systems' Record drawings piping layouts.

C. In addition to requirements in "Preparation" Article, prepare hydronic systems for testing and balancing as follows:

1. Check expansion tank for proper setting.
2. Check highest vent for adequate pressure.
3. Check flow-control valves for proper position.
4. Locate start-stop and disconnect switches, electrical interlocks, and motor controllers.
5. Verify that motor controllers are equipped with properly sized thermal protection.
6. Check that air has been purged from the system.

D. Measure and record upstream and downstream pressure of each piece of equipment.

E. Measure and record upstream and downstream pressure of pressure-reducing valves.

F. Check settings and operation of automatic temperature-control valves. Record final settings.

G. Check settings and operation of each safety valve. Record settings.

3.8 PROCEDURES FOR VARIABLE-FLOW HYDRONIC SYSTEMS

A. Balance systems with automatic two- and three-way control valves by setting systems at maximum flow through heat-exchange terminals, and proceed as specified above for hydronic systems.

B. Adjust the variable-flow hydronic system as follows:

1. Verify that the pressure-differential sensor(s) is located as indicated.
2. Determine whether there is diversity in the system.

C. For systems with no flow diversity:

1. Adjust pumps to deliver total design flow.

a. Measure total water flow.

1) Position valves for full flow through coils.
2) Measure flow by main flow meter, if installed.
3) If main flow meter is not installed, determine flow by pump TDH or known equipment pressure drop.

b. Measure pump TDH as follows:

1) Measure discharge pressure directly at the pump outlet flange or in discharge pipe prior to any valves.
2) Measure inlet pressure directly at the pump inlet flange or in suction pipe prior to any valves or strainers.
3) Convert pressure to head and correct for differences in gauge heights.
4) Verify pump impeller size by measuring the TDH with the discharge valve closed. Note the point on manufacturer's pump curve at zero flow, and verify that the pump has the intended impeller size.
5) With valves open, read pump TDH. Adjust pump discharge valve or speed until design water flow is achieved. If excessive throttling is required to achieve desired flow, recommend pump impellers be trimmed to reduce excess throttling.

c. Monitor motor performance during procedures, and do not operate motor in an overloaded condition.

2. Adjust flow-measuring devices installed in mains and branches to design water flows.

a. Measure flow in main and branch pipes.
b. Adjust main and branch balance valves for design flow.
c. Re-measure each main and branch after all have been adjusted.

3. Adjust flow-measuring devices installed at terminals for each space to design water flows.

a. Measure flow at terminals.
b. Adjust each terminal to design flow.

c. Re-measure each terminal after it is adjusted.
d. Position control valves to bypass the coil, and adjust the bypass valve to maintain design flow.
e. Perform temperature tests after flows have been balanced.

4. For systems with pressure-independent valves at terminals:

a. Measure differential pressure and verify that it is within manufacturer's specified range.
b. Perform temperature tests after flows have been verified.

5. Prior to verifying final system conditions, determine the system pressure-differential set point(s).
6. If the pump discharge valve was used to set total system flow with variable-frequency controller at 60 Hz, at completion, open discharge valve 100 percent, and allow variable-frequency controller to control system differential-pressure set point. Record pump data under both conditions.
7. Mark final settings and verify that all memory stops have been set.
8. Verify final system conditions as follows:

a. Re-measure and confirm that total flow is within design.
b. Re-measure final pumps' operating data, TDH, volts, amps, speed, and static profile.
c. Mark final settings.

D. For systems with flow diversity:

1. Determine diversity factor.
2. Simulate system diversity by closing required number of control valves, as approved by Architect.
3. Adjust pumps to deliver total design flow.

a. Measure total water flow.

1) Position valves for full flow through coils.
2) Measure flow by main flow meter, if installed.
3) If main flow meter is not installed, determine flow by pump TDH or known equipment pressure drop.

b. Measure pump TDH as follows:

1) Measure discharge pressure directly at the pump outlet flange or in discharge pipe prior to any valves.
2) Measure inlet pressure directly at the pump inlet flange or in suction pipe prior to any valves or strainers.
3) Convert pressure to head and correct for differences in gauge heights.
4) Verify pump impeller size by measuring the TDH with the discharge valve closed. Note the point on manufacturer's pump curve at zero flow, and verify that the pump has the intended impeller size.
5) With valves open, read pump TDH. Adjust pump discharge valve or speed until design water flow is achieved. If excessive throttling is required to

achieve desired flow, recommend pump impellers be trimmed to reduce excess throttling.

c. Monitor motor performance during procedures, and do not operate motor in an overloaded condition.

4. Adjust flow-measuring devices installed in mains and branches to design water flows.

   a. Measure flow in main and branch pipes.
   b. Adjust main and branch balance valves for design flow.
   c. Re-measure each main and branch after all have been adjusted.

5. Adjust flow-measuring devices installed at terminals for each space to design water flows.

   a. Measure flow at terminals.
   b. Adjust each terminal to design flow.
   c. Re-measure each terminal after it is adjusted.
   d. Position control valves to bypass the coil, and adjust the bypass valve to maintain design flow.
   e. Perform temperature tests after flows have been balanced.

6. For systems with pressure-independent valves at terminals:

   a. Measure differential pressure, and verify that it is within manufacturer's specified range.
   b. Perform temperature tests after flows have been verified.

7. Open control valves that were shut. Close a sufficient number of control valves that were previously open to maintain diversity, and balance terminals that were just opened.
8. Prior to verifying final system conditions, determine system pressure-differential set point(s).
9. If the pump discharge valve was used to set total system flow with variable-frequency controller at 60 Hz, at completion, open discharge valve 100 percent, and allow variable-frequency controller to control system differential-pressure set point. Record pump data under both conditions.
10. Mark final settings and verify that memory stops have been set.
11. Verify final system conditions as follows:

    a. Re-measure and confirm that total water flow is within design.
    b. Re-measure final pumps' operating data, TDH, volts, amps, speed, and static profile.
    c. Mark final settings.

3.9 PROCEDURES FOR PRIMARY-SECONDARY HYDRONIC SYSTEMS

A. Balance the primary circuit flow first.

B. Balance the secondary circuits after the primary circuits are complete.

C. Adjust pumps to deliver total design flow.

1. Measure total water flow.

   a. Position valves for full flow through coils.
   b. Measure flow by main flow meter, if installed.
   c. If main flow meter is not installed, determine flow by pump TDH or known equipment pressure drop.

2. Measure pump TDH as follows:

   a. Measure discharge pressure directly at the pump outlet flange or in discharge pipe prior to any valves.
   b. Measure inlet pressure directly at the pump inlet flange or in suction pipe prior to any valves or strainers.
   c. Convert pressure to head and correct for differences in gauge heights.
   d. Verify pump impeller size by measuring the TDH with the discharge valve closed. Note the point on manufacturer's pump curve at zero flow, and verify that the pump has the intended impeller size.
   e. With valves open, read pump TDH. Adjust pump discharge valve or speed until design water flow is achieved. If excessive throttling is required to achieve desired flow, recommend pump impellers be trimmed to reduce excess throttling.

3. Monitor motor performance during procedures, and do not operate motor in an overloaded condition.

D. Adjust flow-measuring devices installed in mains and branches to design water flows.

1. Measure flow in main and branch pipes.
2. Adjust main and branch balance valves for design flow.
3. Re-measure each main and branch after all have been adjusted.

E. Adjust flow-measuring devices installed at terminals for each space to design water flows.

1. Measure flow at terminals.
2. Adjust each terminal to design flow.
3. Re-measure each terminal after it is adjusted.
4. Position control valves to bypass the coil, and adjust the bypass valve to maintain design flow.
5. Perform temperature tests after flows have been balanced.

F. For systems with pressure-independent valves at terminals:

1. Measure differential pressure and verify that it is within manufacturer's specified range.
2. Perform temperature tests after flows have been verified.

G. Verify final system conditions as follows:

1. Re-measure and confirm that total water flow is within design.
2. Re-measure final pumps' operating data, TDH, volts, amps, speed, and static profile.
3. Mark final settings.

H. Verify that memory stops have been set.

3.10 PROCEDURES FOR MOTORS

A. Motors 1/2 HP and Larger: Test at final balanced conditions and record the following data:

1. Manufacturer's name, model number, and serial number.
2. Motor horsepower rating.
3. Motor rpm.
4. Phase and hertz.
5. Nameplate and measured voltage, each phase.
6. Nameplate and measured amperage, each phase.
7. Starter size and thermal-protection-element rating.
8. Service factor and frame size.

B. Motors Driven by Variable-Frequency Controllers: Test manual bypass of controller to prove proper operation.

3.11 PROCEDURES FOR BOILERS

A. Boilers:

1. Measure and record entering- and leaving-water temperatures.
2. Measure and record water flow.
3. Measure and record pressure drop.

3.12 PROCEDURES FOR HEAT-TRANSFER COILS

A. Measure, adjust, and record the following data for each coil:

1. Entering- and leaving-water temperature.
2. Water flow rate.
3. Water pressure drop.
4. Airflow.
5. Air pressure drop.

3.13 HVAC CONTROLS VERIFICATION

A. In conjunction with system balancing, perform the following:

1. Verify HVAC control system is operating within the design limitations.
2. Confirm that the sequences of operation are in compliance with Contract Documents.
3. Verify that controllers are calibrated and function as intended.
4. Verify that controller set points are as indicated.
5. Verify the operation of lockout or interlock systems.
6. Verify the operation of valve and damper actuators.
7. Verify that controlled devices are properly installed and connected to correct controller.

8. Verify that controlled devices travel freely and are in position indicated by controller: open, closed, or modulating.
9. Verify location and installation of sensors to ensure that they sense only intended temperature, humidity, or pressure.

B. Reporting: Include a summary of verifications performed, remaining deficiencies, and variations from indicated conditions.

3.14 TOLERANCES

A. Set system's airflow rates and water flow rates within the following tolerances:

1. Supply, Return, and Exhaust Fans and Equipment with Fans: +/- 10 percent. If design value is less than 100 CFM, within 10 CFM.
2. Air Outlets and Inlets: +/- 10 percent. If design value is less than 100 CFM, within 10 cfm.
3. Water Flow Rate: +/- 10 percent. If design value is less than 10 GPM, within 10 percent.

B. Maintaining pressure relationships as designed shall have priority over the tolerances specified above.

3.15 FINAL REPORT

A. General: Prepare a certified written report; tabulate and divide the report into separate sections for tested systems and balanced systems.

1. Include a certification sheet at the front of the report's binder, signed and sealed by the certified testing and balancing engineer.
2. Include a list of instruments used for procedures, along with proof of calibration.
3. Certify validity and accuracy of field data.

B. Final Report Contents: In addition to certified field-report data, include the following:

1. Pump curves.
2. Fan curves.
3. Manufacturers' test data.
4. Field test reports prepared by system and equipment installers.
5. Other information relative to equipment performance; do not include Shop Drawings and Product Data.

C. General Report Data: In addition to form titles and entries, include the following data:

1. Title page.
2. Name and address of the TAB specialist.
3. Project name.
4. Project location.
5. Architect's name and address.
6. Engineer's name and address.
7. Contractor's name and address.

8. Report date.
9. Signature of TAB supervisor who certifies the report.
10. Table of Contents with the total number of pages defined for each section of the report. Number each page in the report.
11. Summary of contents, including the following:

    a. Indicated versus final performance.
    b. Notable characteristics of systems.
    c. Description of system operation sequence if it varies from the Contract Documents.

12. Nomenclature sheets for each item of equipment.
13. Data for terminal units, including manufacturer's name, type, size, and fittings.
14. Notes to explain why certain final data in the body of reports vary from indicated values.
15. Test conditions for fans performance forms, including the following:

    a. Settings for outdoor-, return-, and exhaust-air dampers.
    b. Conditions of filters.
    c. Variable-frequency controller settings for variable-air-volume systems.
    d. Settings for pressure controllers.
    e. Other system operating conditions that affect performance.

16. Test conditions for pump performance forms, including the following:

    a. Variable-frequency controller settings for variable-flow hydronic systems.
    b. Settings for pressure controller(s).
    c. Other system operating conditions that affect performance.

D. System Diagrams: Include schematic layouts of air and hydronic distribution systems. Present each system with single-line diagram and include the following:

1. Quantities of outdoor, supply, return, and exhaust airflows.
2. Water and steam flow rates.
3. Duct, outlet, and inlet sizes.
4. Pipe and valve sizes and locations.
5. Terminal units.
6. Balancing stations.
7. Position of balancing devices.

E. Test, Adjust, & Balance Data: Provide test data for specific systems and equipment as required by the most recent edition of the "AABC National Standards."

END OF SECTION

PRODUCT DATA SHEET 0 - SECTION 23 09 00 – DIRECT DIGITAL CONTROL (DDC) SYSTEM

PART 2 - GENERAL

2.1 SUMMARY

A. General: The control system shall consist of a high-speed, peer-to-peer network of DDC controllers, a control system server, and a web-based operator interface. The control system shall be seamlessly integrated with the State of Maine Bureau of General Services' Honeywell EBI Building Management System to enable monitoring and control of mechanical systems installed under the scope of this project through the central BAS. The project scope shall include but not necessarily be limited to the following:

1. Integrate with the boiler plant controller, via Bacnet interface.
2. Temperature monitoring within the sprinkler room.
3. Variable speed control for building hot water pumps.
4. Integrate with the unit control for the package rooftop HVAC unit via Bacnet interface.
5. Control for terminal VAV boxes throughout the renovated space.
6. Control for supplemental space heating terminals throughout the renovated areas.
7. Integrate with package electric steam humidifiers via Bacnet interface.

B. System software shall be based on a server/thin client architecture, designed around the open standards of web technology. The control system server shall be accessed using a Web browser over the control system network, the owner's local area network, and (at the owner's discretion) over the Internet. The intent of the thin-client architecture is to provide operators complete access to the control system via a Web browser. No special software other than a web browser shall be required to access graphics, point displays, and trends, configure trends, configure points and controllers, or to download programming into the controllers.

C. System shall use the BACnet protocol for communication to the operator workstation or web server and for communication between control modules. I/O points, schedules, setpoints, trends and alarms shall be BACnet objects.

D. The Controls Contractor's work shall consist of the provision of all labor, materials, special tools, equipment, enclosures, power supplies, software, software licenses, project-specific software configurations and database entries, interfaces, wiring, tubing, installation, labeling, engineering, calibration, documentation, submittals, testing, verification, training services, permits and licenses, transportation, shipping, handling, administration, supervision, management, insurance, warranty, specified services and items required by the Contract that are required for the functional turn-key operation of the complete and fully functional Controls Systems. Documents are diagrammatic only. Equipment and labor not specifically referred to herein or on the plans, which are required to meet the functional intent, shall be provided without additional cost to the Owner.

E. Provide all labor, materials, equipment, and service necessary for a complete and operating building automation system.

F. Related Sections include the following:

1. Drawings and general provisions of the Contract, including General and Supplementary Conditions and Division 1 Specification Sections, apply to this Section.
2. Division 13 Section "Fire Alarm”
3. Division 23 Section “Common Work Results”
4. Division 23 Sections with controller interfaces shall be integrated with the work of this Section.
5. Division 23 Section “Testing, Adjusting, and Balancing”
6. Division 26

2.2 SUBMITTALS

A. Product Data and Shop Drawings: Meet requirements of Division 1. In addition, the contractor shall provide shop drawings or other submittals on hardware, software, and equipment to be installed or provided. No work may begin on any segment of this project until submittals have been approved for conformity with design intent. Provide drawings as AutoCAD compatible files on magnetic or optical disk (file format: .DWG or .DXF) and three 11” x 17” prints of each drawing. When manufacturer’s cutsheets apply to a product series rather than a specific product, the data specifically applicable to the project shall be highlighted or clearly indicated by other means. Each submitted piece of literature and drawing shall clearly reference the specification and/or drawing that the submittal is to cover. General catalogs shall not be accepted as cutsheets to fulfill submittal requirements. Select and show submittal quantities appropriate to scope of work. Submittal approval does not relieve Contractor of responsibility to supply sufficient quantities to complete work. Submittals shall include:

1. DDC System Hardware

a. A complete bill of materials to be used indicating quantity, manufacturer, model number, and relevant technical data of equipment to be used.
b. Manufacturer’s description and technical data such as performance curves, product specifications, and installation and maintenance instructions for items listed below and for relevant items not listed below:

1) Direct digital controllers (controller panels)
2) Transducers and transmitters
3) Sensors (including accuracy data)
4) Actuators
5) Valves
6) Relays and switches
7) Control panels
8) Power supplies
9) Batteries
10) Operator interface equipment
11) Wiring

c. Wiring diagrams and layouts for each control panel. Show termination numbers.
d. Schematic diagrams for all field sensors and controllers. Provide floor plans of all sensor locations and control hardware. Riser diagrams showing control network layout, communication protocol, and wire types.

2. Central System Hardware and Software

   a. A complete bill of material of equipment used indicating quantity, manufacturer, model number, and relevant technical.
   b. Manufacturer's description and technical data such as product specifications and installation and maintenance instructions for items listed below and for relevant items furnished under this contract not listed below:

      1) Central Processing Unit (CPU) or web server
      2) Monitors
      3) Keyboards
      4) Power supplies
      5) Battery backups
      6) Interface equipment between CPU or server and control panels
      7) Operating System software
      8) Operator interface software
      9) Color graphic software
      10) Third-party software

   c. Schematic diagrams for all control, communication, and power wiring. Provide a schematic drawing of the central system installation. Label all cables and ports with computer manufacturers' model numbers and functions. Show interface wiring to control system.
   d. Network riser diagrams of wiring between central control unit and control panels.

3. Controlled Systems

   a. Riser diagrams showing control network layout, communication protocol, and wire types.
   b. A schematic diagram of each controlled system. The schematics shall have all control points labeled with point names shown or listed. The schematics shall graphically show the location of all control elements in the system.
   c. A schematic wiring diagram of each controlled system. Label control elements and terminals. Where a control element is also shown on control system schematic, use the same name.
   d. An instrumentation list (Bill of Materials) for each controlled system. List each control system element in a table. Show element name, type of device, manufacturer, model number, and product data sheet number.
   e. A mounting, wiring, and routing plan-view drawing. The design shall take into account HVAC, electrical, and other systems' design and elevation requirements. The drawing shall show the specific location of all concrete pads and bases and any special wall bracing for panels to accommodate this work.
   f. A complete description of the operation of the control system, including sequences of operation. The description shall include and reference a schematic diagram of the controlled system.
   g. A point list for each control system. List I/O points and software points specified in Section 23 09 93. Indicate alarmed and trended points.

4. Quantities of items submitted shall be reviewed but are the responsibility of the Contractor.

5. A description of the proposed process along with all report formats and checklists to be used in Section 23 09 23 Article3.16(Control System Demonstration and Acceptance).
6. BACnet Protocol Implementation Conformance Statement (PICS) for each submitted type of controller and operator interface.

B. Schedules

1. Within one month of contract award, provide a schedule of the work indicating the following:

   a. Intended sequence of work items
   b. Start date of each work item
   c. Duration of each work item
   d. Planned delivery dates for ordered material and equipment and expected lead times
   e. Milestones indicating possible restraints on work by other trades or situations

2. Monthly written status reports indicating work completed and revisions to expected delivery dates. Include updated schedule of work.

C. Project Record Documents. Upon completion of installation, submit three copies of record (as-built) documents. The documents shall be submitted for approval prior to final completion and shall include:

1. Project Record Drawings. As-built versions of submittal shop drawings provided as AutoCAD compatible files on magnetic or optical media (file format: .DWG, .DXF, .VSD, or comparable) and as 11" x 17" prints.
2. Testing and Commissioning Reports and Checklists. Completed versions of reports, checklists, and trend logs used to meet requirements of Section 23 09 23 Article3.16(Control System Demonstration and Acceptance).
3. Operation and Maintenance (O&M) Manual.
4. As-built versions of submittal product data.
5. Names, addresses, and telephone numbers of installing contractors and service representatives for equipment and control systems.
6. Operator’s manual with procedures for operating control systems: logging on and off, handling alarms, producing point reports, trending data, overriding computer control, and changing setpoints and variables.
7. Programming manual or set of manuals with description of programming language and syntax, of statements for algorithms and calculations used, of point database creation and modification, of program creation and modification, and of editor use.
8. Engineering, installation, and maintenance manual or set of manuals that explains how to design and install new points, panels, and other hardware; how to perform preventive maintenance and calibration; how to debug hardware problems; and how to repair or replace hardware.
9. Documentation of programs created using custom programming language including setpoints, tuning parameters, and object database. Electronic copies of programs shall meet this requirement if control logic, setpoints, tuning parameters, and objects can be viewed using furnished programming tools.
10. Graphic files, programs, and database on magnetic or optical media.
11. List of recommended spare parts with part numbers and suppliers.

12. Complete original-issue documentation, installation, and maintenance information for furnished third-party hardware including computer equipment and sensors.
13. Complete original-issue copies of furnished software, including operating systems, custom programming language, operator workstation or web server software, and graphics software.
14. Licenses, guarantees, and warranty documents for equipment and systems.
15. Recommended preventive maintenance procedures for system components, including schedule of tasks such as inspection, cleaning, and calibration; time between tasks; and task descriptions.

D. Training Materials: Provide course outline and materials for each class at least six weeks before first class. Training shall be furnished via instructor-led sessions, computer-based training, or web-based training. Engineer will modify course outlines and materials if necessary to meet Owner's needs. Engineer will review and approve course outlines and materials at least three weeks before first class.

2.3 QUALITY ASSURANCE

A. All products used in this project installation shall be new and currently under manufacture and shall have been applied in similar installations for a minimum of two years. This installation shall not be used as a test site for any new products unless explicitly approved by the owner's representative in writing. Spare parts shall be available for at least five years after completion of this contract.

B. All work described in this section shall be installed, wired, circuit tested and calibrated by factory certified technicians qualified for this work and in the regular employment of the temperature control system manufacturer. Use only employees who are qualified, skilled, experienced, manufacturer trained and familiar with the specific equipment, software and configurations to be provided for this Project.

1. Installer shall have an established working relationship with Control System Manufacturer.
2. Installer shall have successfully completed Control System Manufacturer's control system training. Upon request, Installer shall present record of completed training including course outlines.

C. Provide a complete, neat and workmanlike installation.

D. All work, materials, and equipment shall comply with the rules and regulations of all codes and ordinances of the local, state, and federal authorities. Such codes, when more restrictive, shall take precedence over these plans and specifications.

E. Electrical Components, Devices, and Accessories: Listed and labeled as defined in NFPA 70, by a qualified testing agency, and marked for intended location and application.

F. Comply with NFPA 90A, "Installation of Air Conditioning and Ventilation Systems."

G. Comply with ASHRAE 135 for DDC system control components.

H. The contractor shall protect all work and material from damage by his/her work or employees. The contractor shall be responsible for his/her work and equipment until finally inspected, tested, and accepted. The contractor shall protect any material that is not immediately installed. The contractor shall close all open ends of work with temporary covers or plugs during storage and construction to prevent entry of foreign objects.

2.4 CONTRACTOR QUALIFICATIONS

A. Qualified Bidders: System shall be as manufactured, installed and serviced by:
1. Honeywell
2. Maine Controls - Schneider Electric
3. Johnson Controls, Inc.
4. Siemens
5. Trane
6. Approved bidders. Bids from other vendors, franchised dealers, manufacturer's representatives, or from contractors who are authorized to represent the above named manufacturers must be pre-approved.

B. Installer Qualifications: Automatic control system manufacturer's authorized representative who is trained and approved for installation of system components required for this Project.

C. The above list of manufacturers applies to operator workstation software, controller software, the custom application programming language, and controllers. All other products specified herein (e.g., sensors, valves, dampers, and actuators) need not be manufactured by the above manufacturers.

D. Longevity: The Facilities Management System contractor shall have a minimum of ten years experience installing, and servicing computerized Building Automation Systems (BAS). All subcontractors utilized by the BAS contractor shall have a minimum of five-year experience within their appropriate trades.

E. Past Projects: The BAS contractor shall have completed a minimum of ten projects within the last five years that are at least equal in dollar value and scope to this project. A list of similar projects, dollar volume, scope, contact name and contact number shall be provided by the BAS contractor if asked for by the owner.

F. Personnel, Coverage and Response Capabilities: The BAS contractor shall have a minimum of ten full time electronic service personnel within a 120 mile radius of the project location. One of the five full time electronic service personnel must work within a 60-mile radius of the project location.

G. The BAS contractor shall have an established 24-hour emergency service organization. A dedicated telephone number shall be provided to the owner for requesting emergency service. A maximum of four hour, electronic service technician on sight, response time shall be guaranteed by the BAS contractor.

H. Parts Stocking: The BAS contractor shall have an independently verifiable inventory of electronic service parts. This electronic service parts inventory must have a worth of at least $100,000 per year over the last five years.

2.5 COORDINATION

A. Where the mechanical work will be installed in close proximity to, or will interfere with, work of other trades, the contractor shall assist in working out space conditions to make a satisfactory adjustment. If the contractor installs his/her work before coordinating with other trades, so as to cause any interference with work of other trades, the contractor shall make the necessary changes in his/her work to correct the condition.

B. Coordinate details of telephone line, internet service provider, and associated requirements.

C. Coordinate and schedule work with all other work in the same area, or with work that is dependent upon other work, to facilitate mutual progress.

D. Coordinate location of thermostats and other exposed control sensors with plans and room details before installation.

E. Coordination with controls specified in other sections or divisions. Other sections and/or divisions of this specification include controls and control devices that are to be part of or interfaced to the controls system specified in this section. These controls shall be integrated into the system and coordinated by the contractor.

F. Factory-Mounted Components: Where control devices specified in this Section are indicated to be factory mounted on equipment, arrange for shipping of control devices to unit manufacturer.

G. Sheet Metal Subcontractor:

1. Installation of duct-mounted control devices.
2. Access doors where indicated and as required for proper servicing.

H. HVAC Contractor:

1. Installation of immersion wells and sockets, along with associated shut-off cocks.
2. Installation of pipe-mounted control devices.

I. Testing and Balancing Contractor:

1. The contractor shall furnish a single set of all tools necessary to interface to the control system for test and balance purposes.
2. The contractor shall provide training in the use of these tools. This training will be planned for a minimum of 4 hours.
3. In addition, the contractor shall provide a qualified technician to assist in the test and balance process, until the first 20 terminal units are balanced.
4. The tools used during the test and balance process shall be returned at the completion of the testing and balancing.

J. Electrical Subcontractor: Complying with the principle of "unit responsibility" all electrical work for automatic controls, except as otherwise specified, or shown on the electrical drawings shall be included in Division 23. Electrical work shall, in general, comply with the following, unless otherwise directed by Division 26:

1. Power wiring.
2. All control wiring shown on electric plans such as unit heater line-voltage room thermostats.
3. Duct smoke detectors required for air handler shutdown are supplied under Division 26. Coordinate required length of sampling tube, for full span of ductwork. The contractor shall connect the DDC system to the auxiliary contacts provided on the smoke detector for system safeties and to provide alarms to the DDC system.
4. All electrical work shall comply with the N.E.C. and local electrical codes.
5. All safety devices shall be wired through both hand and auto positions of motor starting device to insure 100% safety shut-off.
6. The motor starter supplier shall provide auxiliary contacts as required for interlock by BAS Contractor; the supplier shall estimate an allowance of at least one auxiliary contract per starter.

K. Coordinate with controls specified in other sections of divisions. Other sections and/or divisions of this specification include controls and control devices that are to be part of or interfaced to the control system specified in this section. These controls shall be integrated into the system and coordinated by the BAS contractor as follows:

1. All communication media and equipment shall be provided as specified hereinafter.
2. Each supplier of a control product is responsible for the configuration, programming, start-up, and testing of that product to meet the sequences of operation described in this section.
3. The BAS contractor shall coordinate and resolve any incompatibility issues that arise between the control products provided under this section and those provided under other sections or divisions of this specification.
4. The BAS contractor is responsible for providing all controls described in the contract documents regardless of where within the contract documents these controls are described.
5. The contractor is responsible for the interface of control products provided by multiple suppliers regardless of where this interface is described within the contract documents.

2.6 DELIVERY, STORAGE, AND HANDLING

A. Factory-Mounted Components: Where control devices specified in this Section are indicated to be factory mounted on equipment, arrange for shipping of control devices to equipment manufacturer.

B. System Software: Update to latest version of software at Project completion.

2.7 WARRANTY

A. Refer to Division 1 Requirements.

B. At the end of the final start-up, testing, and commissioning phase, if equipment and systems are operating satisfactorily to the engineer, the engineer shall sign certificates certifying that the control system's operation has been tested and accepted in accordance with the terms of this specification. The date of acceptance shall be the start of warranty. All work shall have a single warranty date, even when the owner has received beneficial use due to an early system start-up.

C. All components, system software, and parts supplied by the BAS contractor shall be guaranteed against defects in materials and workmanship for one year from acceptance date. The BAS contractor at no charge shall furnish Labor to repair, reprogram, or replace components during the warranty period. All corrective software modifications made during warranty periods shall be updated on all user documentation and on user and manufacturer archived software disks. The Contractor shall respond to the owner's request for warranty service within 24 hours during normal business hours.

D. Provide remote service diagnostic monitoring from the nearest service location. At the request of the owner, a service diagnostic call will be made to troubleshoot and resolve (if possible) any reported system complaints. The owner will provide a dedicated telephone line for connection to the system.

E. Operator workstation software, project-specific software, graphic software, database software, and firmware updates that resolve known software deficiencies as identified by the contractor shall be provided at no charge during the warranty period. Any upgrades or functional enhancements associated with the above-mentioned items also can be provided during the warranty period for an additional charge to the owner by purchasing an in-warranty service agreement from the contractor. Written authorization by the owner must, however, be granted prior to the installation of any of the above-mentioned items.

PART 3 - PRODUCTS

3.1 BUILDING AUTOMATION SYSTEM

A. Microprocessor-based monitoring and control including analog/digital conversion and program logic. A control loop or subsystem in which digital and analog information is received and processed by a microprocessor, and digital control signals are generated based on control algorithms and transmitted to field devices to achieve a set of predefined conditions.

B. DDC system shall consist of a high-speed, peer-to-peer network of distributed DDC controllers, other network devices, operator interfaces, and software. System shall use the BACnet protocol for communication to the operator workstation or web server and for communication between control modules.

C. Provide new wiring and network devices as required to provide a complete and workable control network.

D. DDC system shall be Web based or Web compatible.

1. Web-Based Access to DDC System:

a. DDC system software shall be based on server thin-client architecture, designed around open standards of Web technology. DDC system server shall be accessed using a Web browser over DDC system network, using Owner's LAN, and remotely over Internet through Owner's LAN.

b. Intent of thin-client architecture is to provide operators complete access to DDC system via a Web browser. No special software other than a Web browser shall be

required to access graphics, point displays, and trends; to configure trends, points, and controllers; and to edit programming.

c. Web access shall be password protected.

2. Web-Compatible Access to DDC System:

a. Operator workstation shall perform overall system supervision and configuration, graphical user interface, management report generation, and alarm annunciation.

b. DDC system shall support Web browser access to building data. Operator using a standard Web browser shall be able to access control graphics and change adjustable set points.

c. Web access shall be password protected.

3.2 PERFORMANCE REQUIREMENTS

A. Delegated Design: Engage a qualified professional to design DDC system to satisfy requirements indicated. System Performance Objectives:

1. DDC system shall manage HVAC systems.
2. DDC system control shall operate HVAC systems to achieve optimum operating costs while using least possible energy and maintaining specified performance.
3. DDC system shall respond to power failures, HVAC equipment failures, and adverse and emergency conditions encountered through connected I/O points.
4. DDC system shall operate while unattended by an operator and through operator interaction.
5. DDC system shall record trends and transaction of events and produce report information such as performance, energy, occupancies, and equipment operation.

B. DDC System Data Storage:

1. Include server(s) with disk drive data storage to archive not less than 36 consecutive months of historical data for all I/O points connected to system, including alarms, event histories, transaction logs, trends and other information indicated.
2. When logged onto a server, operator shall be able to also interact with any DDC controller connected to DDC system as required for functional operation of DDC system.
3. Server(s) shall be used for application configuration; for archiving, reporting and trending of data; for operator transaction archiving and reporting; for network information management; for alarm annunciation; and for operator interface tasks and controls application management.
4. Server(s) shall use IT industry-standard database platforms such as Microsoft SQL Server and Microsoft Data Engine (MSDE).

C. Performance Standards. System shall conform to the following minimum standards over network connections. Systems shall be tested using manufacturer’s recommended hardware and software for operator workstation (server and browser for web-based systems).

1. Graphic Display. A graphic with 20 dynamic points shall display with current data within 10 sec.
2. Graphic Refresh. A graphic with 20 dynamic points shall update with current data within 8 sec.and shall automatically refresh every 15 sec.

3. Configuration and Tuning Screens. Screens used for configuring, calibrating, or tuning points, PID loops, and similar control logic shall automatically refresh within 6 sec.
4. Object Command. Devices shall react to command of a binary object within 2 sec. Devices shall begin reacting to command of an analog object within 2 sec.
5. Alarm Response Time. An object that goes into alarm shall be annunciated at the workstation within 45 sec.
6. Program Execution Frequency. Custom and standard applications shall be capable of running as often as once every 5 sec. Select execution times consistent with the mechanical process under control.
7. Performance. Programmable controllers shall be able to completely execute DDC PID control loops at a frequency adjustable down to once per sec. Select execution times consistent with the mechanical process under control.
8. Multiple Alarm Annunciation. Each workstation on the network shall receive alarms within 5 sec of other workstations.
9. Reporting Accuracy. System shall report values with minimum end-to-end accuracy listed in Table 1.
10. Control Stability and Accuracy. Control loops shall maintain measured variable at setpoint within tolerances listed below.
11. Measured Variable and Reported Accuracy

    a. Space Temperature; ±0.5ºC (±1ºF)
    b. Ducted Air: ±0.5ºC (±1ºF)
    c. Outside Air: ±1.0ºC (±2ºF)
    d. Dew Point: ±1.5ºC (±3ºF)
    e. Water Temperature: ±0.5ºC (±1ºF)
    f. Delta-T: ±0.15º (±0.25ºF)
    g. Relative Humidity: ±5% RH
    h. Water Flow: ±2% of full scale
    i. Airflow (terminal): ±10% of full scale; Accuracy applies to 10%–100% of scale
    j. Airflow (measuring stations): ±5% of full scale
    k. Airflow (pressurized spaces): ±3% of full scale
    l. Air Pressure (ducts): ±25 Pa (±0.1 in. w.g.)
    m. Air Pressure (space): ±3 Pa (±0.01 in. w.g.)
    n. Water Pressure: ±2% of full scale
    o. Electrical: ±1% of reading, Not including utility-supplied meters
    p. Carbon Monoxide (CO): ±5% of reading
    q. Carbon Dioxide (CO2): ±50 ppm

12. Control Stability and Accuracy

    a. Air Pressure: ±50 Pa (±0.2 in. w.g.); Range of Medium: 0–1.5 kPa (0–6 in. w.g.)
    b. Air Pressure: ±3 Pa (±0.01 in. w.g.); Range of Medium: 25 to 25 Pa (-0.1 to 0.1 in. w.g.)
    c. Airflow: ±10% of full scale
    d. Space Temperature: ±1.0ºC (±2.0ºF)
    e. Duct Temperature: ±1.5ºC (±3ºF)
    f. Humidity: ±5% RH
    g. Fluid Pressure: ±10 kPa (±1.5 psi); Range of Medium: 1–150 psi

D. Environmental Conditions for Controllers, Gateways, Routers, Instruments and Actuators: Products shall operate without performance degradation under ambient environmental

temperature, pressure and humidity conditions encountered for installed location. If product alone cannot comply with requirement, install product in a protective enclosure that is isolated and protected from conditions impacting performance. Enclosure shall be internally insulated, electrically heated, cooled and ventilated as required by product and application. Products shall be protected with NEMA enclosures suitable for the location where installed.

E. Continuity of Operation after Electric Power Interruption: Equipment and associated factory-installed controls, field-installed controls, electrical equipment, and power supply connected to building normal and backup power systems shall automatically return equipment and associated controls to operating state occurring immediately before loss of normal power, without need for manual intervention by operator when power is restored either through backup power source or through normal power if restored before backup power is brought online.

3.3 COMMUNICATION

A. Control products, communication media, connectors, repeaters, hubs, and routers shall comprise a BACnet internetwork. Controller and operator interface communication shall conform to ANSI/ASHRAE Standard 135, BACnet.

B. Provide new wiring and network devices as required to provide a complete and workable control network.

C. Each controller shall have a communication port for temporary connection to a laptop computer or other operator interface. Connection shall support memory downloads and other commissioning and troubleshooting operations.

D. Internetwork operator interface and value passing shall be transparent to internetwork architecture.

E. An operator interface connected to a controller shall allow the operator to interface with each internetwork controller as if directly connected. Controller information such as data, status, and control algorithms shall be viewable and editable from each internetwork controller.

F. Inputs, outputs, and control variables used to integrate control strategies across multiple controllers shall be readable by each controller on the internetwork. Program and test all cross-controller links required to execute control strategies specified in Section 23 09 93. An authorized operator shall be able to edit cross-controller links by typing a standard object address or by using a point-and-click interface.

G. Workstations, Building Control Panels, and Controllers with real-time clocks shall use the BACnet Time Synchronization service. System shall automatically synchronize system clocks daily from an operator-designated device via the internetwork. The system shall automatically adjust for daylight saving and standard time as applicable.

H. System shall be expandable to at least twice the required input and output objects with additional controllers, associated devices, and wiring.

3.4 DDC EQUIPMENT

A. The Operator Workstation or server shall conform to the BACnet Operator Workstation (B-OWS) or BACnet Advanced Workstation (B-AWS) device profile as specified in ASHRAE/ANSI 135 BACnet Annex L.

B. Operator Interface. Web server shall reside on high-speed network with building controllers. Each standard browser connected to server shall be able to access all system information.

C. Communication. Web server or workstation and controllers shall communicate using BACnet protocol. Web server or workstation and control network backbone shall communicate using ISO 8802-3 (Ethernet) Data Link/Physical layer protocol and BACnet/IP addressing as specified in ANSI/ASHRAE 135, BACnet Annex J.

D. Operator Workstation:

1. Workstation or web server. Industry-standard hardware shall meet or exceed DDC system manufacturer's recommended specifications and shall meet response times specified elsewhere in this document. The following hardware requirements also apply:

   a. The hard disk shall have sufficient memory to store:

      1) All required operator workstation software.
      2) A DDC database at least twice the size of the delivered system database.
      3) One year of trend data based on the points specified to be trended at their specified trend intervals.

   b. Provide additional hardware (communication ports, video drivers, network interface cards, cabling, etc.) to facilitate all control functions and software requirements specified for the DDC system.

2. Minimum hardware configuration shall include the following:
   a. Motherboard: With 8 integrated USB 2.0 ports, integrated PCIE 10/100/1000 network adapter
   b. Processor: Intel® Core™ i3
   c. The hard disk shall have sufficient memory to store: All required operator workstation software. A DDC database at least twice the size of the delivered system database. Three years of trend data based on the points specified to be trended at their specified trend intervals. Minimum size: 500GB.
   d. Random-Access Memory: 8 GB
   e. 320W 90% Efficient Power Supply, Energy Star 5.0 compliant
   f. Graphics: card as recommended by BAS supplier for optimum performance.
   g. Monitor: 17.3 inch High Definition LED Display (1600 X 900) with anti-glare
   h. Keyboard: QWERTY, 105 keys in ergonomic shape.
   i. 16x DVD-RW drive
   j. Mouse: Three button, optical.
   k. APC BR1000G Back-UPS Pro 1000 VA 120V Power-Saving UPS System
   l. Operating System: Windows 10 with high-speed Internet access.
   m. Provide additional hardware (communication ports, video drivers, network interface cards, cabling, etc.) to facilitate all control functions and software requirements specified for the DDC system.

n. Serial, parallel, and network communication ports and cables as required for proper DDC system operation
o. Retain subparagraph below if compliance with ASHRAE 135 is required.
p. Retain one or both of first two subparagraphs and associated subparagraphs below.
q. Printer: Black-and-white, laser-jet type as follows: Print Head: 1200 x 1200 dpi resolution. Paper Handling: Minimum of 250 sheet trays. Print Speed: Minimum of 120 characters per second.

3. Application Software:

a. I/O capability from operator station.
b. System security for each operator via software password and access levels.
c. Automatic system diagnostics; monitor system and report failures.
d. Database creation and support.
e. Automatic and manual database save and restore.
f. Dynamic color graphic displays with up to 10 screen displays at once.
g. Custom graphics generation and graphics library of HVAC equipment and symbols.
h. Alarm processing, messages, and reactions.
i. Trend logs retrievable in spreadsheets and database programs.
j. Alarm and event processing.
k. Object and property status and control.
l. Automatic restart of field equipment on restoration of power.
m. Data collection, reports, and logs. Include standard reports for the following:

1) Current values of all objects.
2) Current alarm summary.
3) Disabled objects.
4) Alarm lockout objects.
5) Logs.

n. Custom report development.
o. Utility and weather reports.
p. Workstation application editors for controllers and schedules.
q. Maintenance management.

4. Custom Application Software:

a. English language oriented.
b. Full-screen character editor/programming environment.
c. Allow development of independently executing program modules with debugging/simulation capability.
d. Support conditional statements.
e. Support floating-point arithmetic with mathematic functions.
f. Contains predefined time variables.

E. Control Units: Modular, comprising processor board with programmable, nonvolatile, random-access memory; local operator access and display panel; integral interface equipment; and backup power source.

1. Units monitor or control each I/O point; process information; execute commands from other control units, devices, and operator stations; and download from or upload to operator workstation or diagnostic terminal unit.
2. Stand-alone mode control functions operate regardless of network status. Functions include the following:

    a. Global communications.
    b. Discrete/digital, analog, and pulse I/O.
    c. Monitoring, controlling, or addressing data points.
    d. Software applications, scheduling, and alarm processing.
    e. Testing and developing control algorithms without disrupting field hardware and controlled environment.

3. Standard Application Programs:

    a. Electric Control Programs: Demand limiting, duty cycling, automatic time scheduling, start/stop time optimization, night setback/setup, on-off control with differential sequencing, staggered start, antishort cycling, PID control, DDC with fine tuning, and trend logging.
    b. HVAC Control Programs: Optimal run time, supply-air reset, and enthalpy switchover.
    c. Chiller Control Programs: Control function of condenser-water reset, chilled-water reset, and equipment sequencing.
    d. Programming Application Features: Include trend point; alarm processing and messaging; weekly, monthly, and annual scheduling; energy calculations; run-time totalization; and security access.
    e. Remote communications.
    f. Maintenance management.
    g. Units of Measure: Inch-pound and SI (metric).

4. Local operator interface provides for download from or upload to operator workstation or diagnostic terminal unit.
5. ASHRAE 135 Compliance: Control units shall use ASHRAE 135 protocol and communicate using ISO 8802-3 (Ethernet) datalink/physical layer protocol.
6. LonWorks Compliance: Control units shall use LonTalk protocol and communicate using EIA/CEA 709.1 datalink/physical layer protocol.

F. Local Control Units: Modular, comprising processor board with electronically programmable, nonvolatile, read-only memory; and backup power source.

1. Units monitor or control each I/O point, process information, and download from or upload to operator workstation or diagnostic terminal unit.
2. Stand-alone mode control functions operate regardless of network status. Functions include the following:

    a. Global communications.
    b. Discrete/digital, analog, and pulse I/O.
    c. Monitoring, controlling, or addressing data points.

3. Local operator interface provides for download from or upload to operator workstation or diagnostic terminal unit.

4. ASHRAE 135 Compliance: Control units shall use ASHRAE 135 protocol and communicate using ISO 8802-3 (Ethernet) datalink/physical layer protocol.

G. I/O Interface: Hardwired inputs and outputs may tie into system through controllers. Protect points so that shorting will cause no damage to controllers.

1. Binary Inputs: Allow monitoring of on-off signals without external power.
2. Pulse Accumulation Inputs: Accept up to 10 pulses per second.
3. Analog Inputs: Allow monitoring of low-voltage (0- to 10-V dc), current (4 to 20 mA), or resistance signals.
4. Binary Outputs: Provide on-off or pulsed low-voltage signal, selectable for normally open or normally closed operation.
5. Analog Outputs: Provide modulating signal, either low voltage (0- to 10-V dc) or current (4 to 20 mA).
6. Tri-State Outputs: Provide two coordinated binary outputs for control of three-point, floating-type electronic actuators.
7. Universal I/Os: Provide software selectable binary or analog outputs.

H. Power Supplies: Transformers with Class 2 current-limiting type or overcurrent protection; limit connected loads to 80 percent of rated capacity. DC power supply shall match output current and voltage requirements and be full-wave rectifier type with the following:

1. Output ripple of 5.0 mV maximum peak to peak.
2. Combined 1 percent line and load regulation with 100-mic.sec. response time for 50 percent load changes.
3. Built-in overvoltage and overcurrent protection and be able to withstand 150 percent overload for at least 3 seconds without failure.

I. Power Line Filtering: Internal or external transient voltage and surge suppression for workstations or controllers with the following:

1. Minimum dielectric strength of 1000 V.
2. Maximum response time of 10 nanoseconds.
3. Minimum transverse-mode noise attenuation of 65 dB.
4. Minimum common-mode noise attenuation of 150 dB at 40 to 100 Hz.

3.5 UNITARY CONTROLLERS

A. Unitized, capable of stand-alone operation with sufficient memory to support its operating system, database, and programming requirements, and with sufficient I/O capacity for the application.

1. Configuration: Local keypad and display; diagnostic LEDs for power, communication, and processor; wiring termination to terminal strip or card connected with ribbon cable; memory with bios; and 72-hour battery backup.
2. Operating System: Manage I/O communication to allow distributed controllers to share real and virtual object information and allow central monitoring and alarms. Perform scheduling with real-time clock. Perform automatic system diagnostics; monitor system and report failures.

3. ASHRAE 135 Compliance: Communicate using read (execute and initiate) and write (execute and initiate) property services defined in ASHRAE 135. Reside on network using MS/TP datalink/physical layer protocol and have service communication port for connection to diagnostic terminal unit.
4. Enclosure: Dustproof rated for operation at 32 to 120 deg F.

3.6 SENSING DEVICES

A. Where feasible, provide the same sensor type throughout the project. Avoid using transmitters unless absolutely necessary.

B. Thermistors: Precision thermistors may be used in applications below 200 degrees F. Sensor accuracy over the application range shall be 0.36 degree F or less between 32 to 150 degrees F. Stability error of the thermistor over five years shall not exceed 0.25 degree F cumulative. A/D conversion resolution error shall be kept to 0.1 degree F. Total error for a thermistor circuit shall not exceed 0.5 degree F.

C. Resistance Temperature Detectors (RTDs): Provide RTD sensors with platinum elements compatible with the digital controllers. Encapsulate sensors in epoxy, series 300 stainless steel, anodized aluminum, or copper. Temperature sensor accuracy shall be 0.1 percent (1 ohm) of expected ohms (1000 ohms) at 32 degrees F. Temperature sensor stability error over five years shall not exceed 0.25 degree F cumulative. Direct connection of RTDs to digital controllers without transmitters is preferred. When RTDs are connected directly, lead resistance error shall be less than 0.25 degrees F. The total error for a RTD circuit shall not exceed 0.5 degree F.

D. Temperature Sensor Details

1. Room Type: Provide the sensing element components within a decorative protective cover suitable for surrounding decor.

   a. Provide room temperature sensors with:

      1) Timed override button
      2) Setpoint adjustment lever or knob.
      3) Override switch.
      4) Digital temperature display.
      5) Insulating Bases: For temperature sensors/thermostats located on exterior walls.

   b. Provide a communication port or 802.11x wireless support for a portable operator interface like a notebook computer or PDA.

2. Duct Probe Type: Ensure the probe is long enough to properly sense the air stream temperature.
3. Duct Averaging Type: Continuous averaging sensors shall be one foot in length for each 4 square feet of duct cross-sectional area, and a minimum length of 6 ft.
4. Pipe Immersion Type: Provide minimum three-inch immersion. Provide each sensor with a corresponding pipe-mounted sensor well, unless indicated otherwise. Sensor wells shall be stainless steel when used in steel piping, and brass when used in copper piping.

Provide the sensor well with a heat-sensitive transfer agent between the sensor and the well interior.

5. Outside Air Type: Provide the sensing element on the building's north side with a protective weather shade that positions the sensor approximately 3 inches off the wall surface, does not inhibit free air flow across the sensing element, and protects the sensor from snow, ice, and rain.

E. Occupancy Sensor: Passive infrared, with time delay, daylight sensor lockout, sensitivity control, and 180-degree field of view with vertical sensing adjustment; for flush mounting.

F. Transmitters: Provide transmitters with 4 to 20 mA or 0 to 10 VDC linear output scaled to the sensed input. Transmitters shall be matched to the respective sensor, factory calibrated, and sealed. Size transmitters for an output near 50 percent of its full-scale range at normal operating conditions. The total transmitter error shall not exceed 0.1 percent at any point across the measured span. Supply voltage shall be 12 to 24 volts AC or DC. Transmitters shall have non-interactive offset and span adjustments. For temperature sensing, transmitter drift shall not exceed 0.03 degrees F a year.

G. Relative Humidity Transmitters: Provide transmitters with an accuracy equal to plus or minus 3 percent from 0 to 90% scale, and less than one percent drift per year. Sensing elements shall be the polymer type. Vaisala Model HMD50U or equal.

H. Current Transducers: Provide current transducers to monitor motor amperage, unless current switches are shown on design drawings or point tables.

I. Shielded Space Static Pressure Sensor: The shielded space static pressure sensors shall be the S.A.P./S shielded static air probes as manufactured by Air Monitor Corporation. Shielded static pressure sensor shall be suitable for surface recessed flush mounting, complete with multiple sensing ports, pressure impulse suppression chamber, airflow shielding, all contained in an aluminum casing, with brushed finish on exposed surfaces. Probes shall be capable of sensing the static pressure in the proximity of the sensor to within 1% of the actual pressure value while being subjected to a maximum airflow of 1000 FPM from a radial source.

J. Shielded Outside Air Static Pressure Sensor: The static outside air probe shall be the S.O.A.P. as manufactured by Air Monitor Corporation, or approved equal. Outdoor static pressure sensor shall be constructed of 10-gauge Type 316 stainless steel with a 2" diameter FPT connection. The outdoor air probe shall be capable of sensing the outside atmospheric air pressure to within 2% of the actual value when subjected to radial wind velocities up to 40 miles per hour with approach angles up to 30º to the horizontal.

K. Input Switches

1. Timed Local Overrides: Provide buttons or switches to override the DDC occupancy schedule programming for each major building zone during unoccupied periods, and to return HVAC equipment to the occupied mode. This requirement is waived for zones clearly intended for 24 hour continuous operation.
2. Freeze Protection Thermostats: Provide special purpose thermostats with flexible capillary elements 20 feet minimum length for coil face areas up to 40 square feet. Provide longer elements for larger coils at 1-foot of element for every 4 square feet of coil face area, or provide additional thermostats. Provide switch contacts rated for the respective motor starter's control circuit voltage. Include auxiliary contacts for the

switch's status condition. A freezing condition at any 18-inch increment along the sensing element's length shall activate the switch. The thermostat shall be equipped with a manual push-button reset switch so that when tripped, the thermostat requires manual resetting before the HVAC equipment can restart.

L. Airflow Measuring Stations:

1. General

a. Provide one thermal airflow measuring device (AMD) for each location indicated on plans, schedules and/or control diagrams. Fan inlet measurement devices shall not be substituted for duct or plenum measurement devices indicated on the plans.
b. Each AMD shall use the principal of thermal dispersion to determine the actual or mass airflow rate of the airstream. Differential pressure-based devices, including pitot tubes, pitot arrays, piezo-rings and devices measuring the pressure drop across a louver, damper or obstruction are not acceptable.
c. Each AMD shall be provided with one or more sensor probes having one or more sensor nodes per probe.
d. Each sensor node shall consist of two hermetically sealed bead-in-glass thermistors. The airflow of each sensor node shall be determined using one self-heated and ambient temperature sensing thermistor. Devices using indirectly heated thermistors to determine the airflow rate are not acceptable. Devices using chip thermistors of any type or packaging are not acceptable. Devices using platinum wire RTDs or similar “hot wire” devices are not acceptable.
e. Thermistors shall be potted in an engineering thermoplastic assembly using water-proof, marine epoxy and shall not be damaged by moisture, direct contact with water or exposure to atmospheric acids. Provide a copy of an independent laboratory report to verify compliance with this requirement.
f. All internal wiring in the probe tube shall be chemical and abrasion resistant Kynar® coated copper.
g. All connections to internal wires in the probe tube shall be solder joints or welds. Connectors of any type in the probe tube are not acceptable.
h. Each thermistor shall be independently calibrated to NIST traceable temperature standards to establish the resistance-temperature characteristics for the determination of airflow and temperature. Devices using interchangeable, curve-matched, thermistors are not acceptable.
i. The airflow sensing thermistor of each sensor node shall be self-heated. Devices using Indirectly heated thermistors are not acceptable.
j. Each sensor node shall be independently processed by the transmitter prior to averaging and output.
k. The specified sensor accuracy shall include the combined uncertainty of the sensor nodes and transmitter. Devices whose overall accuracy is based on individual accuracy specifications of the sensor probes and transmitter shall demonstrate compliance with the specified sensor accuracy over the entire operating range.
l. Installed accuracy shall include the uncertainty of the AMD and the additional uncertainty that results from the placement of the AMD in the airstream. The specified installed accuracy is based on the AMD being installed in accordance with manufacturers published placement and installation guidelines.
m. Transmitters shall be microprocessor-based and operate automatically after brownouts and/or transient power interruptions.

n. All printed circuit boards shall have gold plated interconnects, edge fingers, and test points.
o. Remote transmitters shall have an LCD and four-button user interface.
p. Remote transmitters shall be mounted in a location protected from moisture, rain and snow with an ambient temperature between -20 and 120°F and a humidity range between 5 and 95% RH (non-condensing). Provide a weatherproof enclosure and mount away from direct sunlight when outdoor mounting is required.
q. Probes with remote transmitters shall be “plug and play”, not require matching to the transmitter, and be provided with a UL listed, FEP jacketed, plenum rated cable and connector plug. Devices using PVC jacketed cables to connect sensor probes to the transmitter are not acceptable.
r. All components of each AMD shall be RoHS2 compliant.
s. Each AMD shall be UL/cUL listed as a final assembly.
t. Each AMD shall be FCC-Part 15 compliant. Compliance shall be demonstrated by an independent test laboratory.
u. European shipments shall be CE marked. Compliance shall be demonstrated by an independent test laboratory.
v. Devices with a BACnet network connection shall be BTL tested and listed.

2. Basis of Design:

a. Duct and plenum AMD with temperature measurement and remote transmitter: EBTRON models GTx116-P+ and GTx116e-P+.
b. Duct and plenum AMD with temperature and humidity measurement and remote transmitter: EBTRON model GTx116e-P+/H
c. Small duct and air terminal AMD with temperature measurement and remote transmitter: EBTRON model EF-x2000-T.
d. Small duct and air terminal AMD with temperature measurement and integral transmitter: EBTRON model EF-x1000-T.
e. Fan airflow and temperature measurement with remote transmitter: EBTRON models GTx108-F

M. Pressure Transmitters/Transducers:

1. Manufacturers:

a. BEC Controls Corporation.
b. General Eastern Instruments.
c. MAMAC Systems, Inc.
d. ROTRONIC Instrument Corp.
e. TCS/Basys Controls.
f. Vaisala.
g. Kele

2. Duct Differential Pressure Transmitters: Kele M30/40 and T30/40 Series, or approved equal; reliable, stable, low-air pressure transmitters with 4-20 mA outputs.
3. Duct pressure high-limit: Kele Model 1900-5-MR manual reset pressure switch is designed to monitor duct static and shut down the blower when excess pressure occurs. The switch must be manually reset before the system can start again. Switch contacts are SPDT with solder-type connections. The Model 1900-5-MR measures static pressure only, not differential pressure.

4. Air Differential Pressure Switches, Kele 1900 Series, are designed to monitor the differential pressure of air in HVAC applications. These automatic reset switches are available in ranges from 0.07" to 20" W.C. and shall have SPDT screw-type electrical connections.
5. Filter pressure drop: Kele Model A-602 air filter kit includes two static pressure tips and aluminum tubing and fittings, and it allows the a Kele 1900 Series to monitor filter pressure drop.
6. Static-Pressure Transmitter: Non-directional sensor with suitable range for expected input, and temperature compensated. Accuracy: 2 percent of full scale with repeatability of 0.5 percent. Output: 4 to 20 mA. Building Static-Pressure Range: 0- to 0.25-inch wg. Duct Static-Pressure Range: 0- to 5-inch wg.
7. Water Pressure Transducers: Stainless-steel diaphragm construction, suitable for service; minimum 150-psig operating pressure; linear output 4 to 20 mA.
8. Water Differential-Pressure Transducers: Stainless-steel diaphragm construction, suitable for service; minimum 150-psig operating pressure and tested to 300-psig; linear output 4 to 20 mA.

N. Hydronic Remote Differential Pressure Transmitters: Bell & Gossett ST Series; Setra, or approved equal. Transmitter shall provide an isolated linear 4-20 mA dc output. The unit shall be accurate to ± 0.07% of full span, and shall withstand over ranges up to a static pressure of 2300 psi with negligible change in output. It shall have stainless steel wetted parts with 1/4" NPT process connection. Unit shall be protected against radio frequency interference and shall have a water tight (NEMA Type 6/6P) electrical enclosure with ½” NPT conduit connection.

O. Occupancy Sensors. Occupancy sensors shall utilize Passive Infrared (PIR) and/or Microphonic Passive technology to detect the presence of people within a room. Sensors shall be mounted as indicated on the approved drawings. The sensor output shall be accessible by any lighting and/or HVAC controller in the system. Occupancy sensors shall be capable of being powered from the lighting or HVAC control panel, as shown on the drawings. Occupancy sensor delay shall be software adjustable through the user interface and shall not require manual adjustment at the sensor.

3.7 OUTPUT HARDWARE

A. Motorized control dampers, unless otherwise specified elsewhere, shall be as follows:

1. Submittals shall include leakage, maximum airflow and maximum pressure ratings based on AMCA Publication 500. Dampers shall meet the leakage requirements of the International Energy Conservation Code by leaking less than 3 cfm/sq. ft. at 1" of static pressure and shall be AMCA licensed as Class 1A. Dampers shall be Ruskin model CD60, or approved equal.
2. Control dampers shall be the parallel or opposed blade type as follows: Outdoor and/or return air mixing dampers shall be parallel blade, arranged to direct airstreams toward each other. Other modulating dampers shall be the opposed blade type. Two-position shutoff dampers may be parallel or opposed blade type with blade and side seals.
3. Frame: 5 inches x minimum 16 gage roll formed, galvanized steel hat-shaped channel, reinforced at corners. Structurally equivalent to 13 gage U-channel. Damper blades shall not exceed 8 inches in width or 48 inches in length. Blades shall be suitable for medium velocity performance 2000 fpm. Blades shall be not less than 16-gauge.

4. Bearings shall be corrosion resistant, permanently lubricated stainless steel sleeve type turning in an extruded hole in the damper frame.
5. All blade edges, top, and bottom of the frame shall be provided with replaceable butyl rubber or neoprene seals. Side seals shall be spring-loaded stainless steel.
6. Individual damper sections shall not be larger than 48 in. x 60 in. Provide a minimum of one damper actuator per section.
7. Modulating dampers shall provide a linear flow characteristic where possible.
8. Dampers shall have exposed linkages. Dampers over 48" in applications where sectioning is not applicable shall be supplied with a jackshaft to provide sufficient force throughout the intended operating range.

B. Electronic damper/valve actuation shall be provided.

1. Manufactured, brand labeled or distributed by BELIMO, or approved equal.
2. Size for torque required for damper seal at load conditions.
3. Coupling: V-bolt dual nut clamp with a V-shaped, toothed cradle.
4. Mounting: Actuators shall be capable of being mechanically and electrically paralleled to increase torque if required.
5. Overload protected electronically throughout rotation.
6. Fail-Safe Operation: Mechanical, spring-return mechanism.
7. Proportional Actuators shall be fully programmable through an EEPROM without the use of actuator mounted switches.
8. Proportional actuators shall have an external, built-in switch to allow the reversing of direction of rotation.
9. Proportional actuators shall accept a 0 to 10 VDC or 0 to 20 mA control signal and provide a 2 to 10 VDC or 4 to 20 mA operating range. An actuator capable of accepting a pulse width modulating control signal and providing full proportional operation of the damper is acceptable. All actuators shall provide a 2 to 10 VDC position feedback signal.
10. Temperature Rating: -22 to +122ºF -30 to +50ºC [-58 to +122ºF -50 to +50ºC]
11. Housing: Minimum requirement NEMA type 2 mounted in any orientation. .
12. Agency Listings: ISO 9001, cULus, CE or CSA
13. The manufacturer shall warrant all components for a period of 5 years from the date of production, with the first two years unconditional.

C. Control Valves: Control valves shall be two-way or three-way type for two-position or modulating service as shown.

1. Close-off (differential) Pressure Rating: Valve actuator and trim shall be furnished to provide the following minimum close-off pressure ratings:

   a. Two-way: 150% of total system (pump) head.
   b. Three-way: 300% of pressure differential between ports A and B at design flow or 100% of total system (pump) head.
   c. Steam Valves: 150% of operating (inlet) pressure.

2. Water Valves: Body and trim style and materials shall be in accordance with manufacturer's recommendations for design conditions and service shown, with equal percentage ports for modulating service.

a. Sizing Criteria:

1) Two-position service: Line size.
2) Two-way modulating service: Pressure drop shall be equal to twice the pressure drop through heat exchanger (load), 50% of the pressure difference between supply and return mains, or 5 psi, which ever is greater.
3) Three-way modulating service: Pressure drop equal to twice the pressure drop through the coil exchanger (load), 5 psi maximum.

b. Application:

1) VAV-reheat coils: two-way floating control, non spring return.
2) CUH and Convectors: two-way two position, spring open 100%.
3) AHU main heating coils: two-way modulating control, spring open 100%.
4) Fintube radiation: zone valves. Zone valves shall have brass bodies with female NPT or sweat ends and a stainless steel stem. Normally open zone valve actuators shall on/off and shall be available in 24VAC or 120VAC. Zone valves shall have push button for quick removal of actuator. Zone valves shall have a leakage rate of 0.1% or lower.

c. Valves ½ in. through 2 in. shall be bronze body or cast brass ANSI Class 250, spring-loaded, PTFE packing, quick opening for two-position service. Two-way valves to have replaceable composition disc or stainless steel ball.
d. Valves 2½ in. and larger shall be cast iron ANSI Class 125 with guided plug and PTFE packing.
e. Water valves shall fail normally open or closed, as specified.

D. Output Switches: Control Relays; Field installed and DDC panel relays shall be double pole, double throw, UL864 listed, with contacts rated for the intended application, indicator light, and dust proof enclosure. The indicator light shall be lit when the coil is energized and off when coil is not energized. Relays shall be the socket type, plug into a fixed base, and replaceable without tools or removing wiring. Encapsulated "PAM" type relays may be used for terminal control applications.

3.8 STATUS SENSORS

A. Status Inputs for Electric Motors: Veris Hawkeye 908 Series, or approved equal; split-core adjustable current sensors designed to provide accurate, reliable and maintenance-free fan and pump status indication. Comply with ISA 50.00.01, current-sensing split-core transformers with self-powered transmitter, adjustable and suitable for 175 percent of rated motor current.

B. Current Switches: Self-powered, solid-state with adjustable trip current, selected to match current and system output requirements.

C. Electronic Valve/Damper Position Indicator: Visual scale indicating percent of travel and 2- to 10-V dc, feedback signal.

D. Water-Flow Switches: Bellows-actuated mercury or snap-acting type with pilot-duty rating, stainless-steel or bronze paddle, with appropriate range and differential adjustment, in NEMA 250, Type 1 enclosure.

3.9 ELECTRICAL POWER AND DISTRIBUTION

A. Transformers: Transformers shall conform to UL 506. For control power other than terminal level equipment, provide a fuse or circuit breaker on the secondary side of each transformer.

B. Surge and Transient Protection

1. Provide each digital controller with surge and transient power protection. Surge and transient protection shall consist of the following devices, installed externally to the controllers.
2. Power Line Surge Protection: Provide surge suppressors on the incoming power at each controller or grouped terminal controllers. Surge suppressors shall be rated in accordance with UL 1449, have a fault indicating light, and conform to the following:

   a. The device shall be a transient voltage surge suppressor, hard-wire type individual equipment protector for 120 VAC/1 phase/2 wire plus ground.
   b. The device shall react within 5 nanoseconds and automatically reset.
   c. The voltage protection threshold, line to neutral, shall be no more than 211 volts.
   d. The device shall have an independent secondary stage equal to or greater than the primary stage joule rating.
   e. The primary suppression system components shall be pure silicon avalanche diodes.
   f. The secondary suppression system components shall be silicon avalanche diodes or metal oxide varistors.
   g. The device shall have an indication light to indicate the protection components are functioning.
   h. All system functions of the transient suppression system shall be individually fused and not short circuit the AC power line at any time.
   i. The device shall have an EMI/RFI noise filter with a minimum attenuation of 13 dB at 10 kHz to 300 MHz.
   j. The device shall comply with IEEE C62.41.1 and IEEE C62.41.2, Class "B" requirements and be tested according to IEEE C62.45.
   k. The device shall be capable of operating between -20 degrees F and 122 degrees F.

3. Telephone and Communication Line Surge Protection: Provide surge and transient protection for DDC controllers and DDC network related devices connected to phone and network communication lines. The device shall provide continuous, non-interrupting protection, and shall automatically reset after safely eliminating transient surges. The protection shall react within 5 nanoseconds using only solid-state silicon avalanche technology. The device shall be installed at the distance recommended by its manufacturer.
4. Controller Input/Output Protection: Provide controller inputs and outputs with surge protection via optical isolation, metal oxide varistors (MOV), or silicon avalanche devices. Fuses are not permitted for surge protection.

C. Wiring: Provide complete electrical wiring for the DDC System, coordinate line of demarcation with Division 26. Unless indicated otherwise, provide all normally visible or otherwise exposed wiring in conduit. Where conduit is required, control circuit wiring shall not run in the same conduit as power wiring over 100 volts. Circuits operating at more than 100 volts shall be in accordance with Division 26. Run all circuits over 100 volts in conduit, metallic tubing, covered metal raceways, or armored cable. Use plenum-rated cable for circuits under 100 volts in

enclosed spaces. Examples of these spaces include HVAC plenums, within walls, attics, or above suspended ceilings.

D. Power Wiring: The following requirements are for field-installed wiring:

1. Wiring for 24 V circuits shall be insulated copper 18 AWG minimum and rated for 300 VAC service.
2. Wiring for 120 V circuits shall be insulated copper 14 AWG minimum and rated for 600 VAC service.

E. Analog Signal Wiring: Field-installed analog signal wiring shall be 18 AWG single or multiple twisted pair. Each cable shall be 100 percent shielded and have a 20 AWG drain wire. Each wire shall have insulation rated for 300 VAC service. Cables shall have an overall aluminum-polyester or tinned-copper cable-shield tape.

PART 4 - EXECUTION

4.1 EXAMINATION

A. The project plans shall be thoroughly examined for control device and equipment locations. Any discrepancies, conflicts, or omissions shall be reported to the architect/engineer for resolution before rough-in work is started.

B. The contractor shall inspect the site to verify that equipment may be installed as shown. Any discrepancies, conflicts, or omissions shall be reported to the engineer for resolution before rough-in work is started. Verify that duct-, pipe-, and equipment-mounted devices and wiring are installed before proceeding with installation.

C. The contractor shall examine the drawings and specifications for other parts of the work. If head room or space conditions appear inadequate—or if any discrepancies occur between the plans and the contractor’s work of others—the contractor shall report these discrepancies to the engineer and shall obtain written instructions for any changes necessary to accommodate the contractor’s work with the work of others. Any changes in the work covered by this specification made necessary by the failure or neglect of the contractor to report such discrepancies shall be made by—and the expense of—this contractor.

4.2 INSTALLATION

A. Provide software in control units and operator workstation(s). Implement all features of programs to specified requirements and as appropriate to sequence of operation. Connect and configure equipment and software to achieve sequence of operation specified.

B. Provide all components in accordance with the manufacturer’s recommendations. Perform the installation under the supervision of competent technicians regularly employed in the installation of DDC systems.

C. Provide equipment, piping, and wiring/raceway parallel to building lines (i.e., horizontal, vertical, and parallel to walls) wherever possible.

D. Provide sufficient slack and flexible connections to allow for vibration of piping and equipment.

E. All equipment, installation, and wiring shall comply with acceptable industry specifications and standards for performance, reliability, and compatibility and be executed in strict adherence to local codes and standard practices. Contractor shall continually monitor the field installation for code compliance and quality of workmanship. Contractor shall have work inspected by local and/or state authorities having jurisdiction over the work.

F. Temperature Sensors: Provide temperature sensors in locations that are accessible and provide a good representation of sensed media. Installations in dead spaces are not acceptable. Calibrate sensors according to manufacturer's instructions. Do not use sensors designed for one application in a different application.

G. Room Temperature Sensors: Verify location of thermostats and other exposed control sensors with plans and room details before installation. Mount the sensors on interior walls to sense the average room temperature at the locations indicated. Avoid locations near heat sources such as copy machines or locations by supply air outlet drafts. Mount the center of the sensor 48 inches above the floor to meet ADA requirements.

H. Duct Temperature Sensors

1. Probe Type: Provide a gasket between the sensor housing and the duct wall. Seal the duct penetration air tight. Seal the duct insulation penetration vapor tight.
2. Averaging Type (and coil freeze protection thermostats): Weave the capillary tube sensing element in a serpentine fashion perpendicular to the flow, across the duct or air handler cross-section, using durable non-metal supports. Prevent contact between the capillary and the duct or air handler internals. Provide a duct access door at the sensor location. The access door shall be hinged on the side, factory insulated, have cam type locks, and be as large as the duct will permit; maximum 18 x 18 inches. For sensors inside air handlers, the sensors shall be fully accessible through the air handler's access doors without removing any of the air handler's internals.

I. Outside Air Temperature Sensors: Provide outside air temperature sensors in weatherproof enclosures on the north side of the building, away from exhaust hoods and other areas that may affect the reading. Provide a shield to shade the sensor from direct sunlight.

J. Provide automatic dampers according to Section 23 31 13 "Ductwork."

K. Provide damper motors on outside of duct in warm areas, not in locations exposed to outdoor temperatures.

L. Provide labels and nameplates to identify control components according to Section 23 05 53 "Identification for HVAC Piping and Equipment."

M. Provide hydronic instrument wells, valves, and other accessories according to Section 23 21 16 Hydronic Piping Specialties." Provide thermowells for sensors measuring piping, tank, or pressure vessel temperatures. Locate wells to sense continuous flow conditions. Do not install wells using extension couplings. Where piping diameters are smaller than the length of the wells, provide wells in piping at elbows to sense flow across entire area of well. Wells shall not restrict flow area to less than 70 percent of pipe area. Increase piping size as required to avoid

restriction. Provide thermal conductivity material within the well to fully coat the inserted sensor.

N. Provide refrigerant instrument wells, valves, and other accessories according to Section 23 23 00 "Refrigerant Piping."

O. Provide duct volume-control dampers according to Section 23 31 13 "Ductwork"

4.3 WIRING

A. All control and interlock wiring shall comply with national and local electrical codes, and Division 26 of this specification. Where the requirements of this section differ from Division 26, the requirements of this section shall take precedence.

B. NEC Class 1 (line voltage) wiring shall be UL listed in approved raceway according to NEC and Division 26 requirements. Low-voltage wiring shall meet NEC Class 2 requirements. Low-voltage power circuits shall be sub-fused when required to meet Class 2 current limit.

C. Where NEC Class 2 (current-limited) wires are in concealed and accessible locations, including ceiling return air plenums, approved cables not in raceway may be used provided that cables are UL listed for the intended application.

D. Do not install Class 2 wiring in raceways containing Class 1 wiring. Boxes and panels containing high-voltage wiring and equipment may not be used for low-voltage wiring except for the purpose of interfacing the two (e.g. relays and transformers).

E. Where Class 2 wiring is run exposed, wiring is to be run parallel along a surface or perpendicular to it and neatly tied at 10 ft intervals.

F. Where plenum cables are used without raceway, they shall be supported from or anchored to structural members. Cables shall not be supported by or anchored to ductwork, electrical raceways, piping, or ceiling suspension systems.

G. All wire-to-device connections shall be made at a terminal block or terminal strip. All wire-to-wire connections shall be at a terminal block.

H. All wiring within enclosures shall be neatly bundled and anchored to permit access and prevent restriction to devices and terminals.

I. Maximum allowable voltage for control wiring shall be 120 V. If only higher voltages are available, the contractor shall provide step-down transformers.

J. All wiring shall be installed as continuous lengths, with no splices permitted between termination points.

K. Install plenum wiring in sleeves where it passes through walls and floors. Maintain fire rating at all penetrations.

L. Size of raceway and size and type of wire type shall be the responsibility of the contractor in keeping with the manufacturer’s recommendations and NEC requirements, except as noted elsewhere.

M. Include one pull string in each raceway 2.5 cm (1 in.) or larger.

N. Use color-coded conductors throughout with conductors of different colors.

O. Control and status relays are to be located in designated enclosures only. These enclosures include packaged equipment control panel enclosures unless they also contain Class 1 starters.

P. Conceal all raceways except within mechanical, electrical, or service rooms.

Q. Secure raceways with raceway clamps fastened to the structure and spaced according to code requirements. Raceways and pull boxes may not be hung on flexible duct strap or tie rods. Raceways may not be run on or attached to ductwork.

R. Adhere to this specification's Division 26 requirements where raceway crosses building expansion joints.

S. Install insulated bushings on all raceway ends and openings to enclosures. Seal top end of vertical raceways.

T. The contractor shall terminate all control and/or interlock wiring and shall maintain updated (as-built) wiring diagrams with terminations identified at the job site.

U. Flexible metal raceways and liquid-tight flexible metal raceways shall not exceed 1 m (3 ft) in length and shall be supported at each end. Flexible metal raceway less than ½ in. electrical trade size shall not be used. In areas exposed to moisture, including chiller and boiler rooms, liquid-tight, flexible metal raceways shall be used.

V. Raceway must be rigidly installed, adequately supported, properly reamed at both ends, and left clean and free of obstructions. Raceway sections shall be joined with couplings (according to code). Terminations must be made with fittings at boxes, and ends not terminating in boxes shall have bushings installed.

4.4 COMMUNICATION WIRING

A. The contractor shall adhere to the items listed in the "Wiring" article in Part 3 of the specification. All cabling shall be installed in a neat and workmanlike manner. Follow manufacturer's installation recommendations for all communication cabling

B. Do not install communication wiring in raceways and enclosures containing Class 1 or other Class 2 wiring.

C. Maximum pulling, tension, and bend radius for the cable installation, as specified by the cable manufacturer, shall not be exceeded during installation.

D. Contractor shall verify the integrity of the entire network following cable installation. Use appropriate test measures for each particular cable.

E. When a cable enters or exits a building, a lightning arrestor must be installed between the lines and ground. The lighting arrestor shall be installed according to manufacturer’s instructions.

F. All runs of communication wiring shall be unspliced length when that length is commercially available.

G. All communication wiring shall be labeled to indicate origination and destination data.

H. Grounding of coaxial cable shall be in accordance with NEC regulations article on "Communications Circuits, Cable, and Protector Grounding."

I. BACnet MS/TP communications wiring shall be installed in accordance with ASHRAE/ANSI Standard 135. This includes but is not limited to:

1. The network shall use shielded, twisted-pair cable with characteristic impedance between 100 and 120 ohms. Distributed capacitance between conductors shall be less than 100 pF per meter (30 pF per foot.)
2. The maximum length of an MS/TP segment is 1200 meters (4000 ft) with AWG 18 cable. The use of greater distances and/or different wire gauges shall comply with the electrical specifications of EIA-485.
3. The maximum number of nodes per segment shall be 32, as specified in the EIA 485 standard. Additional nodes may be accommodated by the use of repeaters.
4. An MS/TP EIA-485 network shall have no T connections.

J. Fiber Optic Cable: Maximum pulling tensions as specified by the cable manufacturer shall not be exceeded during installation. Post-installation residual cable tension shall be within cable manufacturer's specifications. All cabling and associated components shall be installed in accordance with manufacturers' instructions. Minimum cable and unjacketed fiber bend radii, as specified by cable manufacturer, shall be maintained.

4.5 FIELD QUALITY CONTROL

A. Manufacturer's Field Service: Engage a factory-authorized service representative to inspect, test, and adjust field-assembled components and equipment installation, including connections. Report results in writing.

1. Operational Test: After electrical circuitry has been energized, start units to confirm proper unit operation. Remove and replace malfunctioning units and retest.
2. Test and adjust controls and safeties.
3. Test calibration of controllers by disconnecting input sensors and stimulating operation with compatible signal generator.
4. Test each point through its full operating range to verify that safety and operating control set points are as required.
5. Test each control loop to verify stable mode of operation and compliance with sequence of operation. Adjust PID actions.
6. Test each system for compliance with sequence of operation.
7. Test software and hardware interlocks.

B. DDC Verification:

1. Verify that instruments are installed before calibration, testing, and loop or leak checks.
2. Check instruments for proper location and accessibility.
3. Check instrument installation for direction of flow, elevation, orientation, insertion depth, and other applicable considerations.
4. Check instrument tubing for proper fittings, slope, material, and support.
5. Check installation of air supply for each instrument.
6. Check flow instruments. Inspect tag number and line and bore size, and verify that inlet side is identified and that meters are installed correctly.
7. Check pressure instruments, piping slope, installation of valve manifold, and self-contained pressure regulators.
8. Check temperature instruments and material and length of sensing elements.
9. Check control valves. Verify that they are in correct direction.
10. Check air-operated dampers. Verify that pressure gages are provided and that proper blade alignment, either parallel or opposed, has been provided.
11. Check DDC system as follows:

    a. Verify that DDC controller power supply is from emergency power supply, if applicable.
    b. Verify that wires at control panels are tagged with their service designation and approved tagging system.
    c. Verify that spare I/O capacity has been provided.
    d. Verify that DDC controllers are protected from power supply surges.

C. Replace damaged or malfunctioning controls and equipment and repeat testing procedures.

4.6 ADJUSTING

A. Calibrating and Adjusting:

1. Calibrate instruments.
2. Make three-point calibration test for both linearity and accuracy for each analog instrument.
3. Calibrate equipment and procedures using manufacturer's written recommendations and instruction manuals. Use test equipment with accuracy at least double that of instrument being calibrated.
4. Control System Inputs and Outputs:

    a. Check analog inputs at 0, 50, and 100 percent of span.
    b. Check analog outputs using milliampere meter at 0, 50, and 100 percent output.
    c. Check digital inputs using jumper wire.
    d. Check digital outputs using ohmmeter to test for contact making or breaking.
    e. Check resistance temperature inputs at 0, 50, and 100 percent of span using a precision-resistant source.

5. Flow:

    a. Set differential pressure flow transmitters for 0 and 100 percent values with 3-point calibration accomplished at 50, 90, and 100 percent of span.
    b. Manually operate flow switches to verify that they make or break contact.

6. Pressure:

    a. Calibrate pressure transmitters at 0, 50, and 100 percent of span.
    b. Calibrate pressure switches to make or break contacts, with adjustable differential set at minimum.

7. Temperature:

    a. Calibrate resistance temperature transmitters at 0, 50, and 100 percent of span using a precision-resistance source.
    b. Calibrate temperature switches to make or break contacts.

8. Stroke and adjust control valves and dampers without positioners, following the manufacturer's recommended procedure, so that valve or damper is 100 percent open and closed.
9. Stroke and adjust control valves and dampers with positioners, following manufacturer's recommended procedure, so that valve and damper is 0, 50, and 100 percent closed.
10. Provide diagnostic and test instruments for calibration and adjustment of system.
11. Provide written description of procedures and equipment for calibrating each type of instrument. Submit procedures review and approval before initiating startup procedures.

B. Adjust initial temperature and humidity set points.

C. Occupancy Adjustments: When requested within 12 months of date of Substantial Completion, provide on-site assistance in adjusting system to suit actual occupied conditions. Provide up to three visits to Project during other than normal occupancy hours for this purpose.

4.7 DEMONSTRATION

A. Engage a factory-authorized service representative to train Owner's maintenance personnel to adjust, operate, and maintain HVAC instrumentation and controls. Refer to Section 01 79 00 "Demonstration and Training."

B. Provide a qualified instructor (or instructors) with five years minimum field experience with the installation and programming of similar BACnet DDC systems. Orient training to the specific systems installed. Coordinate training times with the Owner. Training shall take place at the job site.

C. This training shall last 8 hours and shall be conducted at the DDC system workstation, at a notebook computer connected to the DDC system in the field, and at other site locations as necessary. Upon completion of the Training, each trainee should fully understand the project's DDC system operation. The training session shall include the following:

D. Provide basic control system fundamentals training.

1. This project's list of control system components
2. This project's list of points and objects
3. This project's device and network communication architecture
4. This project's sequences of control, and:
5. Alarm capabilities
6. Trending capabilities
7. Troubleshooting communication errors
8. Troubleshooting hardware errors

E. Provide additional project-specific training:

1. A walk-through tour of the mechanical system and the installed DDC components (controllers, valves, dampers, surge protection, switches, thermostats, sensors, etc.)
2. A discussion of the components and functions at each DDC panel
3. Logging-in and navigating at each operator interface type
4. Using each operator interface to find, read, and write to specific controllers and objects
5. Modifying and downloading control program changes
6. Modifying setpoints
7. Creating, editing, and viewing trends
8. Creating, editing, and viewing alarms
9. Creating, editing, and viewing operating schedules and schedule objects
10. Backing-up and restoring programming and data bases
11. Modifying graphic text, backgrounds, dynamic data displays, and links to other graphics
12. Creating new graphics and adding new dynamic data displays and links
13. Alarm and Event management
14. Adding and removing network devices

4.8 TEST AND BALANCE SUPPORT

A. The controls contractor shall coordinate with and provide on-site support to the test and balance (TAB) personnel This support shall include:

1. On-site operation and manipulation of control systems during the testing and balancing.
2. Control setpoint adjustments for balancing all relevant mechanical systems.
3. Tuning control loops with setpoints and adjustments determined by TAB personnel.

4.9 CONTROLS SYSTEM OPERATORS MANUALS

A. Provide three electronic and printed copies of a Controls System Operators Manual. The manual shall be specific to the project, written to actual project conditions, and provide a complete and concise depiction of the installed work. Provide information in detail to clearly explain all operation requirements for the control system.

B. Provide with each manual: CDs of the project's control system drawings, control programs, data bases, graphics, and all items listed below. Include gateway back-up data and configuration tools where applicable. Provide CDs in jewel case with printed and dated project-specific labels on both the CD and the case. For text and drawings, use Adobe Acrobat or MS Office file types.

When approved by the Owner, AutoCAD and Visio files are allowed. Give files descriptive English names and organize in folders.

C. Provide printed manuals in sturdy 3-ring binders with a title sheet on the outside of each binder indicating the project title, project location, contract number, and the controls contractor name, address, and telephone number. Each binder shall include a table of contents and tabbed dividers, with all material neatly organized. Manuals shall include the following:

1. A copy of the as-built control system (shop) drawings set, with all items specified under the paragraph "Submittals." Indicate all field changes and modifications.
2. A copy of the project's mechanical design drawings, including any official modifications and revisions.
3. A copy of the project's approved Product Data submittals provided under the paragraph "Submittals."
4. A copy of the project's approved Performance Verification Testing Plan and Report.
5. A copy of the project's approved final TAB Report.
6. Printouts of all control system programs, including controller setup pages if used. Include plain-English narratives of application programs, flowcharts, and source code.
7. Printouts of all physical input and output object properties, including tuning values, alarm limits, calibration factors, and set points.
8. A table entitled "AC Power Table" listing the electrical power source for each controller. Include the building electrical panel number, panel location, and circuit breaker number.
9. The DDC manufacturer's hardware and software manuals in both print and CD format with printed project-specific labels. Include installation and technical manuals for all controller hardware, operator manuals for all controllers, programming manuals for all controllers, operator manuals for all workstation software, installation and technical manuals for the workstation and notebook, and programming manuals for the workstation and notebook software.
10. A list of qualified control system service organizations for the work provided under this contract. Include their addresses and telephone numbers.
11. A written statement entitled "Software Upgrades" stating software and firmware patches and updates will be provided upon request at no additional cost to the Owner for a minimum of two years from contract acceptance. Include a table of all DDC system software and firmware provided under this contract, listing the original release dates, version numbers, part numbers, and serial numbers.

4.10 CLEANING

A. The contractor shall clean up all debris resulting from his/her activities daily. The contractor shall remove all cartons, containers, crates, etc., under his/her control as soon as their contents have been removed. Waste shall be collected and placed in a designated location.

B. At the completion of work in any area, the contractor shall clean all work, equipment, etc., keeping it free from dust, dirt, and debris, etc.

C. At the completion of work, all equipment furnished under this section shall be checked for paint damage, and any factory-finished paint that has been damaged shall be required to match the adjacent areas. Any cabinet or enclosure that has been deformed shall be replaced with new material and repainted to match the adjacent areas.

END OF SECTION

SECTION 23 09 93 - SEQUENCE OF OPERATIONS FOR HVAC CONTROLS

PART 1 - GENERAL

1.1 RELATED DOCUMENTS

A. Drawings and general provisions of the Contract, including General and Supplementary Conditions and Division 1 Specification Sections, apply to this Section.

B. Related Sections include the following:

1. Division 23 Section “Common Work Results”
2. Section 23 09 00 – Instrumentation and Control for HVAC for control equipment and devices and submittal requirements.
3. Division 23 Sections – Equipment with built in DDC controllers
4. Division 23 Section “Testing, Adjusting, and Balancing”
5. Division 26

1.2 GENERAL

A. This Section includes control sequences for HVAC systems, subsystems, and equipment. Provide control devices, control software and control wiring as required for automatic operation of each sequence specified. The system is BAS controlled using electric actuation.

1. Provide automatic control for system operation as described herein, although word “automatic” or “automatically”, is not used.
2. Manual operation is limited only where specifically described; however, provide manual override for each automatic operation.
3. Where manual start-up is called for, also provide scheduled automatic start-stop capabilities.

B. These sequences are intended to be performance based. Implementations that provide the same functional result using different underlying detailed logic will be acceptable.

C. Unless otherwise indicated, control loops shall be enabled and disabled based on the status of the system being controlled to prevent windup. When a control loop is enabled or re-enabled, it and all its constituents (such as the proportional and integral terms) shall be set initially to a Neutral value. A control loop in Neutral shall correspond to a condition that applies the minimum control effect, i.e., valves/dampers closed, VFDs at minimum speed, etc.

D. The term “proven” (i.e., “proven on”/ “proven off”) shall mean that the equipment’s DI status point (where provided, e.g. current switch, DP switch, or VFD status) matches the state set by the equipment’s DO command point.

E. The term “software point” shall mean an analog variable, and “software switch” shall mean a digital (binary) variable, that are not associated with real I/O points. They shall be read/write capable (e.g., BACnet analog variable and binary variable).

F. Functions called for in sequence of operations are minimum requirements and not to limit additional BAS system capabilities. Determine, through operation of the system, proportional bands, interval time, integral periods, adjustment rates, and any other input information required to provide stable operation of the control programs.

G. To avoid abrupt changes in equipment operation, the output of every control loop shall be capable of being limited by a user adjustable maximum rate of change, with a default of 25% per minute.

H. Setpoints, timers, deadbands, PID gains, etc., listed in sequences shall be adjustable by the user with appropriate access level whether indicated as adjustable in sequences or not. Software points shall be used for these variables. Fixed scalar numbers shall not be embedded in programs except for physical constants and conversion factors.

I. Values for all points, including real (hardware) points used in control sequences shall be capable of being overridden by the user with appropriate access level (e.g., for testing and commissioning). If hardware design prevents this for hardware points, they shall be equated to a software point and the software point shall be used in all sequences.

J. For each item of equipment, provide following functions which are not specifically mentioned in each Sequence of Operation:

1. Start-Stop, manual, and scheduled
2. On-Off status of each piece of equipment
3. Run-time
4. Alarm

K. Provide Sequenced starting of HVAC equipment, whether or not specifically mentioned in each Sequence of Operation: At initial start-up; for automatic starting on emergency power, or after power blackout.

L. Setback Controls:

1. Heating systems shall be equipped with controls configured to automatically restart and temporarily operate the system as required to maintain zone temperatures above an adjustable heating setpoint down to 55°F.
2. Cooling systems shall be equipped with controls configured to automatically restart and temporarily operate the mechanical cooling system as required to maintain zone temperatures below an adjustable cooling setpoint up to 85°F or to prevent high space humidity levels.
3. Optimum Start Controls. Individual heating and cooling systems with setback controls shall have optimum start controls. The control algorithm shall, as a minimum, be a function of the difference between space temperature and occupied setpoint, the outdoor temperature, and the amount of time prior to scheduled occupancy.

M. All setpoints shall be monitored and adjustable. Setpoints listed herein are approximate. It is the responsibility of the BAS contractor to calibrate the system and all setpoints to actual working conditions once the system is on line.

N. Variable Frequency Drives

1. To avoid operator confusion, the speed command point (and speed feedback point, if used) for VFDs should be configured so that a speed of 0% corresponds to 0 Hz and 100% corresponds to maximum speed set in the VFD, not necessarily 60 Hz. The maximum speed may be limited below 60 Hz to protect equipment or it may be above 60 Hz for direct drive equipment. Many times, drives are configured such that a 0% speed signal corresponds to the minimum speed programmed into the VFD, but that causes the speed AO value and the actual speed to deviate from one another.
2. For each piece of equipment, the minimum speed shall be stored in a single software point. This value shall be written to the VFD's minimum speed setpoint via the drive's network interface; in the case of a hard-wired VFD interface, the minimum speed shall be the lowest speed command sent to the drive by the BAS.
3. Current VFD status and operating conditions shall be monitored through its communications interface port. The interface shall monitor the following software points: Motor RPM, motor amps, motor runtime, VFD status, "In fault condition", and "In bypass".
4. System Dampers:

    a. Damper control typically consists of a requirement to open a damper (such as an outdoor air damper, smoke damper, isolation damper, etc.) before the motor is to operate in any mode (drive or bypass). This means that a "start" or "run" command can come from the BAS, an operator at the VFD provides a local "start" command at the VFD keypad, or the command can come from the serial communication connection.
    b. After a run command is received, but before the VFD actually runs the motor, the VFD shall close a relay contact to actuate the damper. When the damper is fully open, an end switch from the damper will close and then the VFD will be allowed to operate the motor. The damper end-switches shall be mounted such that they can be adjusted during start-up so the open indication is only provided when the damper is in the fully open position.
    c. Ensure that the VFD has an input that when activated, will stop the motor in any VFD operating mode as well as bypass.
    d. Where dampers operate in conjunction with fan operation, the damper open signal shall precede the fan start signal by 10-23 seconds. The damper close signal shall be delayed 10-23 seconds after the fan stop signal.

O. Alarms

1. All alarms shall include a Time/Date Stamp using the standalone control module time and date.
2. Each alarm can be configured in terms of criticality (Critical/Not Critical), operator acknowledgement (Requires Acknowledgement/Does Not Require Acknowledgement), and conditions required for an alarm to clear automatically (Requires Acknowledgement of a Return to Normal/Does Not Require Acknowledgement of a Return to Normal).
3. An operator shall be able to sort alarms based on level, time/date, and current status.
4. Alarms should be reported with the following information:

    a. Date and time of the alarm
    b. Level of the alarm
    c. Description of the alarm
    d. Equipment tags for the units in alarm
    e. Possible causes of the alarm, if provided by the fault detection routines

f. The source that serves the equipment in alarm

5. There shall be 5 levels of alarm

a. Level 1: Critical/life safety
b. Level 2: Significant equipment failure
c. Level 3: Non-critical equipment failure/operation
d. Level 4: Energy conservation monitor
e. Level 5: Maintenance indication, notification
f. 19.

6. Hierarchical Alarm Suppression: For each piece of equipment or space controlled by the BAS, define its relationship (if any) to other equipment in terms of “source,” “load,” or “system.”

a. Source: A component is a “source” if it provides resources to a downstream component, such as a chiller providing chilled water to an AHU.
b. Load: A component is a “load” if it receives resources from an upstream component, such as an AHU that receives chilled water from a chiller.
c. The same component may be both a load (receiving resources from an upstream source) and a source (providing resources to a downstream load).
d. System: A set of components is a “system” if they share a load in common (i.e., collectively act as a source to downstream equipment, such as a set of chillers in a lead/lag relationship serving air handlers).

1) If a single component acts as a source for downstream loads (e.g., an AHU as a source for its VAV boxes), then that single source component shall be defined as a “system” of one element.
2) For equipment with associated pumps (chillers, boilers, cooling towers):

a) If the pumps are in a one-to-one relationship with equipment they serve, the pumps shall be treated as part of the system to which they are associated (i.e., they are not considered loads) since a pump failure will necessarily disable its associated equipment.
b) If the pumps are headered to the equipment they serve, then the pumps may be treated as a system, which is a load relative to the upstream equipment (e.g., chillers) and a source relative to downstream equipment (e.g., air handlers).

e. For each system as defined above, there shall be a SystemOK flag, which is either true or false.
f. SystemOK shall be true when all of the following are true:

1) The system is proven on.
2) The system is achieving its temperature and/or pressure setpoint(s) for at least five minutes
3) The system is ready and able to serve its load

g. SystemOK shall be false while the system is starting up (i.e., before reaching setpoint) or when enough of the system’s components are unavailable (in alarm,

disabled, or turned off) to disrupt the ability of the system to serve its load. This threshold shall be defined by the design engineer for each system.

1) By default, Level 1 through Level 3 component alarms (indicating equipment failure) shall inhibit SystemOK. Level 4 and Level 5 component alarms (maintenance and energy efficiency alarms) shall not affect SystemOK.
2) The operator shall have the ability to individually determine which component alarms may or may not inhibit SystemOK.

h. The BAS shall selectively suppress (i.e., fail to announce; alarms may still be logged to a database) alarms for load components if SystemOK is false for the source system that serves that load.

1) If SystemOK is false for a cooling water system (i.e., chiller, cooling tower, or associated pump) then only high temperature alarms from the loads shall be suppressed.
2) If SystemOK is false for a heating water system (i.e., boiler or associated pump) then only low temperature alarms from the loads shall be suppressed.
3) If SystemOK is false for an airside system (air handler, fan coil, VAV box, etc.), then all alarms from the loads shall be suppressed.

i. This hierarchical suppression shall cascade through multiple levels of load-source relationship, such that alarms at downstream loads shall also be suppressed.
j. The following types of alarms will never be suppressed by this logic:

1) Life/safety and Level 1 alarms
2) Failure-to-start alarms (i.e., equipment is commanded on, but status point shows equipment to be off)
3) Failure-to-stop/hand alarms (i.e., equipment is commanded off, but status point shows equipment to be on)

P. Time-Based Suppression Block: This block is used to suppress reset requests and alarms after a change in setpoint. This includes automatic changes in setpoint, e.g., due to a change in occupancy sensor status, as well as changes made by occupants. This block shall calculate a time delay period after any change in setpoint based on the difference between the controlled variable (e.g., zone temperature) at the time of the change and the new setpoint. The default time delay period shall be:

1. For thermal zone temperature alarms: 10 minutes per °F of difference, but no longer than 120 minutes
2. For thermal zone temperature cooling requests: 5 minutes per °F of difference, but no longer than 30 minutes
3. For thermal zone heating requests: 5 minutes per °F of difference, but no longer than 30 minutes

Q. Normal positions for controlled devices:

1. Unless noted, the following valves and dampers shall fail closed:

a. Outside air dampers

b. Relief air dampers
c. Exhaust air closure dampers
d. Steam valves at convertors
e. Cooling coil valves for coils located indoors shall close to the coil.
f. Domestic hot water heat source.
g. Humidifier valves.

2. Unless noted, the following valves and dampers shall fail open:

a. Heating coils.
b. Cooling coil valves for coils located outdoors shall open to the coil.

1.3 GRAPHICAL USER INTERFACE

A. All points shown in the points list or described in the sequence shall be shown on the graphics.

B. All setpoints including setpoints internal to control algorithms shall be adjustable from all BAS operator interfaces. All commands shall be overridable from all BAS operator interfaces. All control points shall be adjustable or overridable from the same graphic page that displays the points.

C. All points required by the sequence of operation including, but not limited to, the points listed in the sequences of operation below, as well as all of the points' associated values, shall be connected to the BAS and available to the BAS operators on all operator workstations and all operator interface devices as part of a graphical display that depicts the mechanical system controlled.

PART 2 - SEQUENCES

2.1 BOILER PLANT CONTROL –CONDENSING

A. Enable Boiler Plant: not wired to the BAS, enable the plant at the boiler plant controller, specified in Section 23 52 16. Each boiler shall run subject to its own internal safeties and controls.

B. Upon a call for heat, the boiler controller shall turn on the appropriate pumps. Provide communication wiring between the pumps.

C. Heating Primary Loop Control

1. Input Device: Supply and return header temperature sensors shall be provided under Section 23 52 16.
2. Action: Boiler plant shall be controlled by a Boiler Plant Controller specified in Section 23 52 16.
3. Action: Provide boiler hot water to meet DHW heater demand. When the DHW demand is satisfied, boilers shall be controlled to provide heating hot water (temperature as per the reset schedule).

D. Heating-Water Supply Temperature Reset:

1. Input Device: Outside air temperature wired to boiler plant controller
2. Input Device: Provide heating main supply and main return temperature sensors.
3. Output Device: boiler plant controller software, supply loop temperature setting.
4. Action: Modulate the heating output to satisfy temperature setpoint.

E. Enable: Heating hot water pumps:

1. Input Device: Boiler plant controller
2. Output Device: boiler plant controller pump enable
3. Action: Energize pump
4. Pump Speed Control: Not controlled by BAS, pump speed control is built in to the self-sensing "smart" pumps specified in Section 23 21 23

   a. Variable flow. During operation, the pump automatically makes the necessary adjustment to the actual system characteristic.
   b. Automatic lead-lag pump control. If lead pump fails, backup pump shall start.
   c. Lead pump shall rotate to equalize run time.

F. Pump Status:

1. Input Device: current sensor
2. Output Device: BAS software
3. Action: Generate an alarm if status deviates from BAS start/stop control.
4. Action: Auto Lead Lag Pumps: Automatic lead-lag pump control is built in to the self-sensing "smart" pumps specified in Section 23 21 23. Lead pump shall rotate weekly to equalize run time.

G. Heating Loop Minimum Flow:

1. See unit heater schedule. Provide 3-way valves for selected unit heaters.

H. Combustion air: Direct piped; combustion air damper control not required.

I. Operator Station Display: Indicate the following on operator workstation display terminal:

1. Outdoor-air temperature.
2. Heating-water supply temperature.
3. Heating-water supply temperature set point.
4. Pump status, ON/OFF
5. VFD status
6. VFD fault
7. Status of each boiler
8. Mixed temperature to building, downstream of TMV.
9. Domestic hot water generation pump status/failure
10. Domestic hot water supply to building temperature
11. System pumps run status
12. System pumps fault

2.2 PACKAGED ROOFTOP AC UNITS

A. RTU's are supplied with factory-packaged controls (refer to Section 237413). Provide all necessary monitoring points and additional control points to perform the following sequences defined for each unit.

B. Temperature & Humidity

1. Winter:

   a. 68°F +/- 2°F, 40% RH +/- 5% (Refer Humidifier Control Sequence-RTU-1 Only, no humidification for RTU-2)
   b. Positive Pressure
   c. Fresh air: 0.06 CFM/SF
   d. Maximum of 2 or 3 people.

2. Summer:

   a. 70°F +/- 2°F, 50% RH +/- 5% (Refer to Package RTU Controls)
   b. Positive Pressure
   c. Fresh air: 0.06 CFM/SF
   d. Maximum of 2 or 3 people.

C. Occupied mode:

1. Occupied mode shall be 24/7.
2. System starts supply fan to run continuously. During occupied mode, the outside air damper shall open to its minimum position. Multi- zone variable volume control shall be packaged with the RTU.
3. Cooling Mode: Packaged RTU controls shall operate the mechanical cooling stages and hot gas reheat to maintain discharge air temperature. Discharge air temperature shall be reset based upon outside air.
4. If any zone is calling for heat, mechanical cooling shall be disabled, unless in de-humidification mode.
5. Heating Mode: The package rooftop unit does not incorporate a heating coil. Space heating shall be via zone terminal units.
6. Economizer cooling: Economizer cooling shall not be used.

D. IECC 2015 C403.2.4.7: Provide a fault detection and diagnostics (FDD) system complying with the following:

1. The following temperature sensors shall be permanently installed to monitor system operation:

   a. Outside air.
   b. Supply air.
   c. Return air.

2. Temperature sensors shall have an accuracy of ±2°F over the range of 40°F to 80°F.
3. Refrigerant pressure sensors, where used, shall have an accuracy of ±3 percent of full scale.

4. The unit controller shall be configured to provide system status by indicating the following:

    a. Compressor enabled.
    b. Heating enabled.
    c. Mixed air low limit cycle active.
    d. The current value of each sensor.

5. The unit controller shall be capable of manually initiating each operating mode so that the operation of compressors, economizers, fans and the heating system can be independently tested and verified.
6. The unit shall be configured to report faults to the BAS.
7. The FDD system shall be configured to detect the following faults:

    a. Air temperature sensor failure/fault.
    b. Not economizing when the unit should be economizing.
    c. Economizing when the unit should not be economizing.
    d. Damper not modulating.
    e. Excess outdoor air.

E. Operating Sequence-Coordinate with Section 237413 as required to insure operation as follows, using the unit's factory controller in conjunction with inputs and outputs from the BAS:
1. The Building Automation System (BAS) shall send the controller Occupied Bypass, Morning Warm-up/Pre-Cool, Occupied/Unoccupied and Heat/Cool modes. The BAS shall also send the discharge air temperature setpoint and the duct static pressure setpoint. If a BAS is not present, or communication is lost with the BAS the controller shall operate using default modes and setpoints.
2. Occupied (DOAU):
    a. During occupied periods, the supply fan and relief fan shall run continuously and the outside air damper shall open to maintain the current airflow setpoint. The unit controller shall control the supply fan speed to maintain the current supply duct static pressure setpoint (adj.). The unit controller shall control the relief fan speed to maintain the current building static pressure setpoint (adj.). The DX cooling and the electric heat shall control to maintain the active discharge air temperature setpoint.
3. Unoccupied (DOAU):
    a. Space conditions shall be communicated via BAS or a hardwire space/temperature humidity sensor. Unoccupied starting sequence shall begin when the Unoccupied Heating, Cooling, or Dehumidification Mode is enabled. Otherwise, the unit shall remain dormant with the supply fan disabled. Supply Fan Startup sequence is identical to occupied operation. The outdoor air damper shall be commanded to close, and the return air damper shall open. If the unit is under Economizer conditions, the Outdoor Air Damper Position Command shall open to the Outdoor Air Damper Maximum Position Setpoint. Unoccupied Heating Mode shall be enabled when the Space Temperature falls below the Unoccupied Heating Enable Setpoint. During Unoccupied Heating Mode the unit shall run the heat to maintain 90°F for the discharge air temperature. Unoccupied Heating Mode shall be disabled when the Space Temperature rises 2 deg. F above the Unoccupied Heating Setpoint. When there is no call for Unoccupied Heating Mode or Unoccupied Dehumid Mode, Unoccupied Cooling Mode shall be enabled when the Space Temperature rises above the Unoccupied Cooling Enable Setpoint. During

Unoccupied Cooling Mode the unit shall run the cooling to maintain 50 deg. F for the discharge air temperature. Unoccupied Cooling Mode shall be disabled when the Space Temperature rises 2 deg. F above the Unoccupied Cooling Enable Setpoint.

4. Optimal Start:
   a. The BAS shall monitor the scheduled occupied time, occupied space setpoints and space temperature to calculate when the optimal start occurs.
5. Morning Warm-Up Mode:
   a. During optimal start, if the average space temperature is below the occupied heating setpoint a morning warm-up mode shall be activated. When morning warm-up is initiated the unit shall enable the heating and fan(s). When the space temperature reaches the occupied heating setpoint (adj.), the unit shall transition to the occupied mode.
6. Pre-Cool Mode:
   a. During optimal start, if the average space temperature is above the occupied cooling setpoint, pre-cool mode shall be activated. When pre-cool is initiated the unit shall enable the fan and cooling. When the space temperature reaches occupied cooling setpoint (adj.), the unit shall transition to the occupied mode.
7. Optimal Stop:
   a. The BAS shall monitor the scheduled unoccupied time, occupied setpoints and space temperature to calculate when the optimal stop occurs. When the optimal stop mode is active the unit controller shall maintain the space temperature to the space temperature offset setpoint.
8. Occupied Bypass:
   a. The BAS shall monitor the status of the ON and CANCEL buttons of the space temperature sensors. When an occupied bypass request is received from a space sensor, the unit shall transition from its current occupancy mode to occupied bypass mode and the unit shall maintain the space temperature to the occupied setpoints (adj.).
9. Heat/Cool Mode:
   a. COOLING: The unit controller shall use the discharge air temperature sensor and discharge air temperature cooling setpoint to determine when to initiate requests for cooling. Discharge air setpoint shall be maintained by controlling the cooling as required.
   b. HEATING: The unit controller shall use the discharge air temperature sensor and discharge air temperature heating setpoint to determine when to initiate requests for heating. Discharge air setpoint shall be maintained by controlling the heating as required. During Unoccupied Heating or Morning Warm-Up Mode, the unit heat request shall be communicated to the system VAVs prior to commencing heating operation to allow VAV units to open. The variable speed drive shall be commanded to 100% and the heat shall be staged on and off to satisfy the zone temperature setpoint.
10. Cooling (DOAU):
    a. Cooling Mode shall be enabled when the Discharge Air Temperature Setpoint, plus the deadband of 2 deg.F. During Cooling Mode, Cooling Capacity shall be adjusted to maintain Discharge Air Temperature Setpoint. Dehumidification Mode shall take priority over Cooling Mode. Circuit 1and 2 refrigeration pressures shall be monitored, and Cooling Capacity shall be limited to prevent the indoor coil from freezing.
11. Primary Heating (DOAU):

a. Heating Mode shall be enabled when the Discharge Air Temperature is below the Discharge Air Temperature Setpoint plus the deadband of 2 deg. F (adj.). Dehumidification Mode shall take priority over Heating Mode. During Heating Mode, Heat Capacity shall be adjusted to maintain the Discharge Air Temperature to Discharge Air Temperature Setpoint. The unit controller shall monitor the status of the heater using Heat On Off Status Local. In the event of ignition failure, the unit shall make three ignition attempts before displaying Diagnostic: Heat Failure. The unit shall shut down when a heat failure occurs and shall a reset four hours later to re-attempt ignition.

12. Dehumidification (DOAU):
    a. Dehumidification Mode shall be enabled whenever the Outdoor Air Dewpoint rises above the Outdoor Air Dewpoint Enable Setpoint. During Dehumidification Mode, Cooling Capacity shall be adjusted to maintain the Dehumidification Temperature Setpoint (adjustable). Hot Gas Reheat Valve Command shall be adjusted to maintain Discharge Air Temperature Setpoint .
13. Supply Fan Operation (DOAU):
    a. When the unit becomes occupied, the outdoor air damper and the return air damper shall adjust to the minimum outdoor air damper position. After the dampers have modulated the fan sequence can begin. When the fan start sequence has begun, the unit controller shall command the variable speed drive for the supply fan to 50%. A supply fan status switch shall prove fan status. If after 2 minutes (adj.) the fan does not have a proven signal, the Supply Fan Failure alarm shall be displayed and the unit shall shutdown requiring a manual reset. After the startup sequence, the unit controller shall control the speed of the supply fan to maintain a Supply Duct Static Pressure Setpoint. If the supply duct static pressure reaches 3.00 inches of W.C. (adj.), the high limit pressure switch shall shut down the unit, requiring a manual reset to re-start the unit. Supply and relief fans are interlocked via software; a failure of either shall disable both.
14. Static Pressure High Limit:
    a. If for any reason the supply air pressure exceeds the supply air pressure high limit, the supply fan shall shut down. The unit shall be allowed to restart three times after a 15 minute off period. If the over-pressurization condition occurs on the fourth restart, the unit shall shut down and a manual reset diagnostic is displayed at the remote panel and/or the BAS system.
15. Filter Status:
    a. A differential pressure switch shall monitor the differential pressure across the filter(s) when the fan is running. If the switch closes during normal operation a dirty filter alarm shall annunciate at the BAS.
16. Smoke Detector Shutdown:
    a. The unit shall shut down in response to a signal from the smoke detector indicating the presence of smoke. The smoke detector shall be interlocked to the unit through the dry contacts of the smoke detector. A manual reset of the smoke detector shall be required to restart the unit.

F. Display of input points thru BAS:

1. System graphic
2. System occupied/unoccupied mode.
3. RTU status/failure: contact from RTU.
4. Filter status: contact from RTU
5. Discharge air temperature: analog output from RTU.

6. Supply-fan-discharge static-pressure indication and setpoint.
7. Space temperature.

2.3 HUMIDIFICATION (RTU-1)

A. Self-Contained Electric Steam Generating Humidifier: During occupied periods, when associated HVAC Unit is operating in occupied mode, as scheduled through the BAS, humidifier generates steam for delivery to the HVAC supply air duct to maintain space relative humidity setpoint.

B. Humidifier shall have a BACnet IP card.

C. Humidifier shall be off if fan is off. Humidifier shall operate subject to a sail-type air-proving switch.

D. Humidification Control: Humidifier shall modulate output as required to satisfy space humidity as measured at return duct/space mounted humidity sensors. The setpoint shall have a seasonal setpoints schedule as noted below, in a straight-line, gradual change, with minimal short-term fluctuations. For HVAC-1, the humidity output shall be modulated in sequence with the cooling-and-dehumidification cycles to avoid simultaneous dehumidification and humidification.

E. Modulating high limit control: The modulating high limit control system shall include a modulating electronic humidity transmitter (duct-mounted downstream from the humidifier). It shall transmit to the microprocessor controller to modulate humidifier output and maintain the highest desired space humidity possible, at all airflow volumes, keeping supply duct RH below 85%.

F. A high limit duct humidistat shall be provided 15 feet downstream of the humidifier as a safety, set at 95% RH.

G. Display the following data:

1. Space Humidity
2. Space Humidity Setpoint
3. High humidity alarm

2.4 TERMINAL UNITS

A. The unit shall use an optimal start algorithm for morning start-up. This algorithm shall minimize the unoccupied warm-up or cool-down period while still achieving comfort conditions by the start of scheduled occupied period.

B. Each zone shall have separate occupied and unoccupied heating and cooling setpoints.

C. The software shall prevent:

1. The heating setpoint from exceeding the cooling setpoint minus 1°F (i.e., the minimum difference between heating and cooling setpoints shall be 1°F).

2. The unoccupied heating setpoint from exceeding the occupied heating setpoint; and
3. The unoccupied cooling setpoint from being less than the occupied cooling setpoint.

D. Zone Unoccupied Override:

1. A timed local override control shall allow an occupant to override the schedule and place the unit into an occupied mode for an adjustable period of time. At the expiration of this time, control of the unit shall automatically return to the schedule. The adjustment shall be capable of being limited in software. These are absolute limits imposed by programming, which are in addition to the range limits (e.g., ±4°F) of the thermostat adjustment device.

    a. As a default, the active occupied cooling setpoint shall be limited between 72°F and 80°F.
    b. As a default, the active occupied heating setpoint shall be limited between 60°F and 72°F.

2. The active heating and cooling setpoints shall be independently adjustable, respecting the limits and anti-overlap logic described above. If zone thermostat provides only a single setpoint adjustment, then the adjustment shall move both the active heating and cooling setpoints upwards or downwards by the same amount, within the limits described above.
3. The adjustment shall only affect occupied setpoints in Occupied Mode, and shall have no impact on setpoints in all other modes.
4. At the onset of demand limiting, the local setpoint adjustment value shall be frozen. Further adjustment of the setpoint by local controls shall be suspended for the duration of the demand limit event.

E. Control Loops

1. Two separate control loops shall operate to maintain space temperature at setpoint, the Cooling Loop and the Heating Loop.

    a. The Heating Loop shall be enabled whenever the space temperature is below the current zone heating setpoint temperature, and disabled when space temperature is above the current zone heating setpoint temperature and the Loop output is zero for 30 seconds. The Loop may remain active at all times if provisions are made to minimize integral windup.
    b. The Cooling Loop shall be enabled whenever the space temperature is above the current zone cooling setpoint temperature, and disabled when space temperature is below the current zone cooling setpoint temperature and the Loop output is zero for 30 seconds. The Loop may remain active at all times if provisions are made to minimize integral windup.

2. The Cooling Loop shall maintain the space temperature at the active cooling setpoint. The output of the loop shall be a software point ranging from 0% (no cooling) to 100% (full cooling).
3. The Heating Loop shall maintain the space temperature at the active heating setpoint. The output of the loop shall be a software point ranging from 0% (no heating) to 100% (full heating).
4. Loops shall use proportional + integral logic or other technology with similar performance. Proportional-only control is not acceptable, although the integral gain shall

be small relative to the proportional gain. P and I gains shall be adjustable by the operator.

5. Zone State

   a. Heating: when the output of the space heating control loop is nonzero and the output of the cooling loop is equal to zero.
   b. Cooling: when the output of the space cooling control loop is nonzero and the output of the heating loop is equal to zero.
   c. Deadband: when not in either Heating or Cooling.

6. Zone temperature alarms

   a. High temperature alarm

      1) If the zone is 3°F above cooling setpoint for 10 minutes, generate Level 3 alarm.
      2) If the zone is 5°F above cooling setpoint for 10 minutes, generate Level 2 alarm.

   b. Low temperature alarm

      1) If the zone is 3°F below heating setpoint for 10 minutes, generate Level 3 alarm.
      2) If the zone is 5°F below heating setpoint for 10 minutes, generate Level 2 alarm.

   c. Suppress zone temperature alarms as follows:

      1) After zone setpoint is changed.
      2) Zone alarms are not suppressed in Setup, Setback, or Unoccupied Modes so that you detect heating or cooling equipment or control failures that could result in excessive pull down or pick up loads and even freezing of pipes if left undetected.

F. Unit Heaters - Hydronic

1. Enable:

   a. Input Device: BAS software
   b. Output Device: BAS software
   c. Action: Enable unit heaters whenever the boiler plant is in heating mode.
   d. Heating for vestibules: Shall include automatic controls configured to shut off the heating system when outdoor air temperatures are above 45°F. Vestibule heating systems shall also be controlled by a thermostat in the vestibule with a setpoint limited to a maximum of 60°F.

2. Room Temperature:

   a. Input Device: Electronic temperature sensor.

b. Output Device: BAS system binary output.
c. Output Device: Normally-open 2-position, 2-way control valve.
d. Action: Open control valve and cycle fan to maintain space temperature (occupied & unoccupied). Minimum run time: 1 minute. Space temperature setpoint: 65°F.

G. Perimeter Heating Units

1. Radiators; Room Temperature:

a. Input Device: Electronic temperature sensor.
b. Output Device: Electronic control-valve operator.
c. Action: 2-position valve controlled to maintain space temperature.

2. Sequence in operation with AHUs with duct heating coils in same zone.

2.5 AIR TERMINAL UNITS

A. Each pressure-independent VAV box shall include have a discharge air sensor to monitor DA temperature.

B. Unoccupied Mode

1. When the central air handling unit is off, the BAS shall command the VAV supply air damper closed.
2. When the central air handling unit is off, the BAS shall command the hot water valve closed.
3. If the room temperature falls below 60°F (adjustable), the BAS shall generate an alarm.

C. Occupied Mode

1. The BAS shall schedule the VAV to occupied mode. The central air handling unit must be running before the VAV will operate in the occupied mode.
2. Provide “dual maximum” control for maximum efficiency. In addition to a minimum airflow setpoint and a cooling maximum airflow setpoint, there is also a heating maximum airflow setpoint; hence the name "dual maximum".

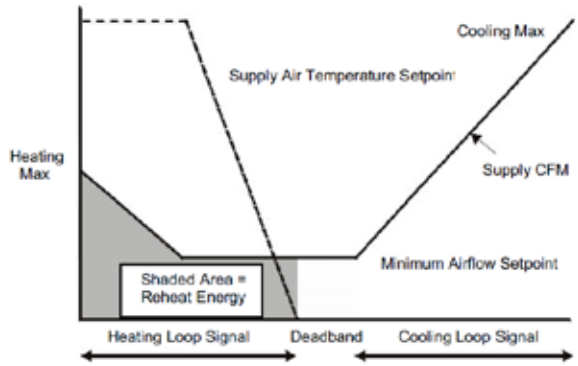

a. When the zone is in the cooling mode, the cooling loop output is mapped to the airflow setpoint from the cooling maximum to the minimum airflow setpoints. The hot water valve is closed.
b. When the zone is in the deadband mode, the airflow setpoint shall be the minimum airflow setpoint. The hot water valve is closed.
c. When the zone is in the heating mode, the heating loop shall maintain space temperature at the heating setpoint as follows:

1) From 0%-50% loop signal, the heating loop output shall reset the discharge temperature from supply air temperature setpoint (e.g., 55°F) to 90°F. Note the upper temperature is limited to prevent stratification during heating.
2) From 50%-100% loop signal, the heating loop output shall reset the zone airflow setpoint from the minimum airflow setpoint to the maximum heating airflow setpoint. The supply air discharge temperature remains at 90°F.
3) The hot water valve shall be modulated using a PI control loop to maintain the discharge temperature at setpoint. Note that directly controlling the hot water valve from the zone temperature PI loop is not acceptable since it will not allow supply air temperature to be under control and limited in temperature to prevent stratification.
4) The VAV damper shall be modulated to maintain the measured airflow at setpoint.

3. The BAS shall limit the maximum cooling setpoint to 78°F (adj.) and the minimum cooling setpoint to 74°F (adj.).
4. The BAS shall limit the maximum heating setpoint to 72°F (adj.) and the minimum heating setpoint to 65°F (adj.).
5. Tenant Override: When a VAV is in the Unoccupied Mode and a button on the room sensor is pushed, the BAS shall place the VAV in the Occupied Mode for 60 minutes (adjustable). The BAS shall command the appropriate central air handling unit and central plant equipment to on to provide the overridden VAV with the necessary comfort.
6. Operator Workstation: Display the following data:

a. Room/area served.
b. Room temperature, alarm high and low (2°F out of range)
c. Room temperature set point, occupied.
d. Room temperature set point, unoccupied.
e. VAV supply box CFM

f. VAV box damper % open
g. VAV box supply temperature (units with reheat coils)
h. Heating coil control-valve position as percent open.

2.6 DUCTLESS SPLIT AIR CONDITIONING UNITS

A. AC unit shall operate by manufacturer-supplied controls and wall thermostat to maintain setpoint during occupied and unoccupied modes.

B. Display the following thru BAS for the above:

1. Unit status ON/OFF.

END OF SECTION

SECTION 23 21 13 – HYDRONIC HVAC PIPING

PART 1 - GENERAL

1.1 RELATED DOCUMENTS

A. Drawings and general provisions of the Contract, including General and Supplementary Conditions and Division 1 Specification Sections, apply to this Section.

B. Related Sections include the following:

1. Division 23 Section "Common Work Results"
2. Division 23 Section "Hydronic Pumps" for pumps, motors, and accessories.
3. Division 23 controls section for temperature-control valves and sensors.

1.2 SUMMARY

A. This Section includes piping and specialties for hydronic HVAC piping.

1.3 ACTION SUBMITTALS

A. Product Data: For each type of the following:

1. Piping
2. Hydronic specialties
3. Chemical treatment.

B. Delegated-Design Submittal: Braided Expansion Loops

1. Design calculations and detailed fabrication and assembly of pipe anchors and alignment guides, hangers and supports for multiple pipes, expansion joints and loops, and attachments of the same to the building structure.
2. Locations of pipe anchors and alignment guides and expansion joints and loops.

1.4 INFORMATIONAL SUBMITTALS

A. Water Analysis: Submit a copy of the water analysis to illustrate water quality available at Project site.

1.5 CLOSEOUT SUBMITTALS

A. Operation and Maintenance Data: For air-control devices, hydronic specialties, and special-duty valves to include in emergency, operation, and maintenance manuals.

1.6 QUALITY ASSURANCE

A. Welding: Qualify processes and operators according to the ASME Boiler and Pressure Vessel Code: Section IX, "Welding and Brazing Qualifications."

B. Qualify soldering processes, procedures, and solderers for copper and copper alloy pipe and tube in accordance with ASTM B 828.

C. Qualify brazing processes for copper and copper alloy pipe and tube according to ANSI/AWS C3.4.

D. ASME Compliance: Comply with ASME B31.9, "Building Services Piping," for materials, products, and installation. Safety valves and pressure vessels shall bear the appropriate ASME label. Fabricate and stamp air separators and expansion tanks to comply with the ASME Boiler and Pressure Vessel Code, Section VIII, Division 1.

E. HVAC Water-Treatment Service Provider Qualifications: An experienced HVAC water-treatment service provider capable of analyzing water qualities, installing water-treatment equipment, and applying water treatment as specified in this Section.

1.7 COORDINATION

A. Drawings show the general layout of piping and accessories but do not show all required fittings and offsets that may be necessary to connect piping to equipment and to coordinate with other trades. Fabricate piping based on field measurements. Provide all necessary fittings and offsets.

B. Coordinate layout and installation of hydronic piping and suspension system components with other construction.

C. Coordinate pipe sleeve installations and penetrations with other trades.

D. Coordinate pipe fitting pressure classes with products specified in related Sections.

PART 2 - PRODUCTS

2.1 MANUFACTURERS

A. Manufacturers: Subject to compliance with requirements, provide products by one of the following:

1. Grooved Mechanical-Joint Fittings and Couplings:

   a. Victaulic Company of America.
   b. Anvil
   c. Grinnell Corporation.

2. Balancing Valves:

    a. Griswold Controls.
    b. ITT Bell & Gossett
    c. Taco, Inc.
    d. Tour & Anderson
    e. IMI Flow Design
    f. Griswold Controls
    g. Watts Industries Inc.
    h. Caleffi
    i. Nexus

3. Hydronic Pressure-Reducing Valves:

    a. Amtrol, Inc.
    b. Armstrong Pumps, Inc.
    c. Conbraco Industries, Inc.
    d. ITT Bell & Gossett
    e. Spence Engineering Company, Inc.
    f. Caleffi
    g. Watts Industries, Inc.

4. Safety Valves:

    a. Amtrol, Inc.
    b. Armstrong Pumps, Inc.
    c. Conbraco Industries, Inc.
    d. ITT McDonnell & Miller.
    e. Kunkle Valve Division.
    f. Spence Engineering Company, Inc.
    g. Caleffi
    h. Watts Industries Inc.

5. Expansion Tanks, Air Separators, and Hydronic Specialties:

    a. Amtrol, Inc.
    b. Woods
    c. ITT Bell & Gossett
    d. Taco, Inc.
    e. Caleffi
    f. Watts Industries Inc.
    g. Wessels
    h. Patterson
    i. Thrush
    j. Armstrong
    k. Flamco

6. Air Vents and Vacuum Breakers:

    a. Armstrong International, Inc.
    b. Barnes & Jones, Inc.

c. ITT Hoffman
d. Caleffi
e. Spirotherm
f. Spirax Sarco, Inc.

2.2 PIPING MATERIALS

A. General: Refer to Part 3 "Piping Applications" Article for applications of pipe and fitting materials.

2.3 COPPER TUBE AND FITTINGS

A. Drawn-Temper Copper Tubing: ASTM B 88, Type L.

B. DWV Copper Tubing: ASTM B 306, Type DWV.

C. Fitting Standard: Copper fittings shall conform to ASME B16.18, ASME B16.22 or ASME B16.26.

D. Press Fitting: Viega Pro Press - Copper and copper alloy press fittings shall conform to material requirements of ASME B16.18 or ASME B16.22 and performance criteria of IAPMO PS 117. Sealing elements for press fittings shall be EPDM. Sealing elements shall be factory installed or an alternative supplied by fitting manufacturer. Press ends shall have SC (Smart Connect) feature design (leakage path). Provide a smart connect feature to assure leakage of liquids and/or gases from inside the system past the sealing element of an un-pressed connection. The function of this feature shall be to provide the installer quick and easy identification of connections which have not been pressed prior to putting the system into operation.

E. Wrought-Copper Unions: ASME B16.22.

F. Solder Filler Metals: ASTM B 32, 95-5 tin antimony.

G. Brazing Filler Metals: AWS A5.8, Classification BAg-1 (silver).

2.4 STEEL PIPE AND FITTINGS

A. Steel Pipe, NPS 2 and Smaller: ASTM A-53, Type S (seamless) or Type F (furnace-butt welded), Grade B, Schedule 40 and 80, black steel, plain ends.

B. Steel Pipe, NPS 2-1/2 and larger: ASTM A-53, Type E (electric-resistance welded), Grade B, Schedule 40 and 80, black steel, plain ends.

C. Malleable-Iron Threaded Fittings: ASME B16.3, Classes 150 and 300.

D. Malleable-Iron Unions: ASME B16.39; Classes 150, 250, and 300.

E. Cast-Iron Pipe Flanges and Flanged Fittings: ASME B16.1, Classes 25, 125, and 250; raised ground face, and bolt holes spot faced.

F. Wrought-Steel Fittings: ASTM A-234/A 234M, wall thickness to match adjoining pipe.

G. Wrought Cast- and Forged-Steel Flanges and Flanged Fittings: ASME B16.5, including bolts, nuts, and gaskets of the following material group, end connections, and facings: Material Group: 1.1. End Connections: Butt-welding. Facings: Raised face.

H. Viega, MegaPress Fittings: ½-inch through 2-inch shall conform to IAPMO PS117 or ICC LC1002, FM, and UL. MegaPress fittings with zinc/nickel coating for use with IPS schedule 5 thru schedule 40 carbon steel pipe conforming to ASTM A53, ASTM A106, ASTM A135, or ASTM A795. Fittings shall have an EPDM sealing element, 420 stainless steel grip ring, 304 stainless steel separator ring, and Smart Connect (SC) feature that guarantees detection of an un-pressed fitting. Installation must be in accordance to manufacturer's instructions and specifications utilizing manufacturers approved tooling. All installers shall be trained by manufacturer.

I. Mechanically formed copper or steel tee connections are not acceptable.

J. Welded Branch and Tap Connections: Forged steel weldolets, or branchlets and threadolets may be used for branch connections up to one pipe size smaller than the main. Forged steel half-couplings, ANSI B16.11 may be used for drain, vent and gage connections.

K. Welding Materials: Comply with Section II, Part C, of the ASME Boiler and Pressure Vessel Code for welding materials appropriate for wall thickness and for chemical analysis of pipe being welded.

L. Gasket Material: Thickness, material, and type suitable for fluid to be handled; and design temperatures and pressures.

2.5 HYDRONIC VALVES

A. Gate Valves

1. Threaded Ends 2" and Smaller: Class 125, bronze body, union bonnet, rising-stem, solid wedge: Hammond IB617, Nibco T-124/134, Stockham B105, Milwaukee 1152 or equal.
2. Flanged Ends 2-1/2" and Larger: Class 125, iron body, bronze mounted, bolted bonnet, rising stem, OS&Y, solid wedge: Hammond IR1140, Nibco F617-0, Stockham G623, Milwaukee F2885 or equal.
3. Solder Ends 2" and Smaller: Class 125, bronze body, union bonnet, rising-stem, solid wedge: Hammond IB648, Nibco S134, Stockham B115, Milwaukee 1169 or equal.
4. Comply with the following standards: Cast Iron Valves: MSS SP – 70; Bronze Valves: MSS SP – 80.

B. Ball Valves

1. Threaded Ends 4" and Smaller: 150 psi WP and 600psi non-shock CWP, forged brass full-port or cast bronze two piece body, hard chrome plated forged brass ball, true adjustable packing nut ("O"-ring only type stem seal not acceptable), blow-out proof stem: Watts FBV-3C series/B6080 series, Hammond 8501, Nibco T-585-70, Milwaukee BA100, Apollo 70-Series, or approved equal.

2. Soldered Ends 3" and Smaller: 150 psi WP and 600psi non-shock CWP, full-port cast bronze or forged brass two piece body, hard chrome plated forged brass ball, true adjustable packing nut ("O"-ring only type stem seal not acceptable), blow-out proof stem: Watts FBVS-3C series/B6081 series, Hammond 8511, Nibco S-585-70, Milwaukee BA150, Apollo 70-Series, approved or equal.
3. Comply with MSS SP-110.

C. Butterfly Valves

1. Basis of Design: Center Line Series 200; Lug Type, cast iron, drilled and tapped lug body, ductile iron disc, 416SS shaft, bronze bushing, EPDM seat.
2. Valve bodies shall have extended necks to provide for 2-1/4" insulation as needed.
3. Comply with MSS SP-67.
4. Compatible with ANSI 125/150 flanges. Dead-end capacity to 200 psi.
5. Operators: 6” and smaller: handle with infinite adjustment; 8” and larger: gear w/balance-stop hand wheel. Valves located 7 feet or higher: provide gear/chain wheel.
6. Approved Manufacturers: Watts, Hammond, Nibco, Milwaukee, or approved equal.

D. Bronze Globe Valves, Class 125:

1. Description:

a. Standard: MSS SP-80, Type 1.
b. CWP Rating: 200 psig.
c. Body Material: ASTM B 62, bronze with integral seat and screw-in bonnet.
d. Ends: Threaded or solder joint.
e. Stem and Disc: Bronze.
f. Packing: Asbestos free.
g. Handwheel: Malleable iron.

E. Bronze Globe Valves, Class 150:

1. Description:

a. Standard: MSS SP-80, Type 2.
b. CWP Rating: 300 psig.
c. Body Material: ASTM B 62, bronze with integral seat and union-ring bonnet.
d. Ends: Threaded.
e. Stem: Bronze.
f. Disc: Bronze.
g. Packing: Asbestos free.
h. Handwheel: Malleable iron.

F. Iron Globe Valves, Class 125:

1. Description:

a. Standard: MSS SP-85, Type I.
b. CWP Rating: 200 psig.
c. Body Material: ASTM A 126, gray iron with bolted bonnet.
d. Ends: Flanged.

e. Trim: Bronze.
f. Packing and Gasket: Asbestos free.
g. Operator: Handwheel or chainwheel.

G. Iron Globe Valves, Class 250:

1. Description:

a. Standard: MSS SP-85, Type I.
b. CWP Rating: 500 psig.
c. Body Material: ASTM A 126, gray iron with bolted bonnet.
d. Ends: Flanged.
e. Trim: Bronze.
f. Packing and Gasket: Asbestos free.
g. Operator: Handwheel or chainwheel.

H. Wafer Check valves: Provide wafer style, butterfly type, spring actuated check valves designed to be installed with gaskets between two standard Class 125 flanges. Construct iron body valves with pressure containing parts of valves with materials conforming to ANSI/ASTM A 126, Grade B. Support hanger pin by removable side plug; Class 125, cast iron body, stainless steel trim, bronze disc, Buna-N seal:, Watts BF/DBF series, Metraflex 700 Series, Nibco W920-W, Stockham WG970, Hammond 9253, Milwaukee 1400, or approved or equal.

I. Swing check valves:

1. Construct pressure containing parts of Valves as follows: Bronze Valves: 125 or 150 psi: ANSI/ASTM B 62; Iron Body Valves: ANSI/ASTM A-126, Grade B. Comply with the following standards for design, workmanship, material and testing: Bronze Valves: MSS SP – 80; Cast Iron Valves: MSS SP – 71.
2. Construct valves of pressure casting free of any impregnating materials. Construct disc and hanger as one piece. Support hanger pins by removable side plug.
3. Threaded Ends 2" and Smaller: Class 125, bronze body, screwed cap, Teflon disc: Hammond IB904, Nibco T-413Y, Stockham B320T, Milwaukee 509 or approved equal.
4. Soldered Ends 2" and Smaller: Class 125, bronze body, screwed cap, Teflon disc: Hammond IB912, Nibco S-413-Y, Stockham B310T, Milwaukee 511 or approved equal.
5. Flanged Ends 2-1/2" and Larger: Class 125, iron body, bronze mounted, horizontal swing, cast-iron disc: Hammond IR1124, Nibco F918-B, Stockham G931, Milwaukee F2974 or approved equal.

J. Pressure-Reducing Valves: Diaphragm-operated, bronze or brass body with low inlet pressure check valve, inlet strainer removable without system shutdown, and non-corrosive valve seat and stem. Select valve size, capacity, and operating pressure to suit system. Valve shall be factory set at operating pressure and have capability for field adjustment.

K. ASME Safety Relief Valves: Bell & Gossett A-434D, or equal; diaphragm-operated, bronze or brass body with brass and rubber, wetted, internal working parts; shall suit system pressure and heat capacity and shall comply with the ASME Boiler and Pressure Vessel Code, Section IV. The fluid shall not discharge into the spring chamber. The valve shall have a low blow-down differential. The valve seat and all moving parts exposed to the fluid shall be of non-ferrous material.

2.6 HOOKUPS AND BALANCING

A. Manufacturers: Subject to compliance with requirements, provide products by one of the following.

1. Nexus (Basis of Design)
2. IMI Flow Design
3. HCI
4. Hays
5. Griswold
6. Victaulic
7. Taco
8. Bell & Gossett

B. Minimum Requirements Per Coil Installation:

1. Automatic Flow Control Valve (AFCV) or Manual Flow Control Valve (MFCV) as indicated.
2. Y-strainer.
3. Temperature Control Valve (TCV) – see 230900.
4. Union connections at coil and TCV.
5. Air vent on return side.
6. Blowdown/drain valve on supply side.
7. Pressure/temperature test plugs across coil and TCV.
8. Full port, union end ball valves or butterfly valve for shutoff.

C. Materials Of Construction (2½” and smaller, except as noted)

1. Brass or stainless steel metals.
2. Teflon, EPDM or FKM seals.

D. Installation

1. Installation shall conform to basic piping methods specifications.
2. All components shall be isolated by shutoff valves.
3. Flexible hoses shall be installed at coil connections as shown in the plans or at the option of the mechanical contractor.
4. Union tailpieces may be used to reduce pipe sizes to match coil and TCV valve sizes.
5. Pressure/Temperature test plugs shall be installed across coil.
6. A Y-strainer or combination strainer and valve shall be installed on the supply side.
7. Unions shall be used to isolate the coil, AFCV and TCV.

E. Shutoff Valves (2½” and smaller) shall be forged brass ball valves, Nexus Model UX:

1. A one-piece body rated at 600 psi WP, 325° F.
2. Interchangeable union ends with FKM O-ring seal (ground joint is not acceptable).
3. Multiple ¼” tapped ports for test plugs, vent, and/or drain.
4. Blowout-proof stem with dual KFM O-ring seals.
5. Hard chrome plated stainless steel ball with Teflon seats.

F. Shutoff Valves (2½" and larger) shall be lug pattern butterfly valves, Nexus Model BV:

1. A minimum of 225 psi WP, 250° F.
2. 125# Class lug pattern cast or ductile iron body.
3. EPDM cartridge seat, 416 stainless steel one-piece shaft, and 304 stainless steel disc.
4. Top and bottom shaft bushings.
5. Provide an infinite position chrome plated steel top plate for balancing purposes.
6. Epoxy coated body.

G. Automatic Flow Control Valves shall be non-clogging design, Nexus Model UM:

1. The flow cartridge's non-clogging service design shall include no metal-to-metal contact, no segmented ports, and incorporate a flow nozzle and a metering disc controlled by a pressure compensating spring.
2. The flow cartridge shall be a single assembly, constructed with stainless steel moving parts and be accessible without removing the valve from the piping (½" thru 2½" brass valves).
3. The flow cartridge shall be 100% factory flow tested and calibrated to maintain an accuracy of ±5%; the accuracy shall be 100% maintained over the operating pressure range.
4. The flow cartridge shall carry a limited lifetime material warranty.
5. Valves (2½" and smaller) shall be a forged brass Y-pattern body with ball valve, (2) pressure/temperature ports, a tag indicating the model, flow rate and PSID range, blowout proof stem with dual FKM O-ring seals, interchangeable union end with FKM O-ring seal, hard chrome plated brass ball with Teflon seats, and rated at 600 psi WP, 325° F.
6. Valves (2½" +) shall be a wafer style or 125# / 150# Class flanged cast iron body with (2) pressure/temperature ports, a tag indicating the model, flow rate and PSID range; able to incorporate a drain and/or vent as required; and rated at 175 psi WP, 250° F.

H. Manual Flow Control Valves (2½" and smaller) shall be a combination of metering/balance type of forged brass construction, Nexus Model XB:

1. A modified venturi equipped with (2) pressure/temperature ports and an ID tag.
2. A combination shutoff and memory stop device-indicating degree of opening.
3. A rating of 600 WOG, 325°F.
4. An interchangeable union ends with FKM O-ring type seal.
5. Blowout proof stem with dual FKM O-ring seals.
6. Hard chrome plated stainless steel ball with Teflon seats.

I. Manual Flow Control Valves (2½" and larger) shall be an instrument and metering station with integral Pitot Tube, multiple ports for instruments, accessories and drains, a butterfly throttling valve; Nexus Model NXFB:

1. The Pitot tube shall be twin tube design, of 316 stainless steel with blowout proof attachment to station body.
2. Ports shall include ¾" port for thermometer well, ¼" ports for pressure gauge, air vent, transmitter or other accessories, and a ½" drain port.
3. The instrument station shall be 125# Class flanged (mates to 150# Class flanges) construction.
4. The butterfly valve shall be lug pattern with a rating 225 PSIG, 250°F.

The butterfly valve shall have an infinite position operator with memory stop (6” and smaller), worm gear with memory stop (6” and larger).

J. Temperature Control Valves, ref. Section 23 09 00 & 230993.

K. Combination Strainer/Ball Valves (2½” and smaller) used for supply side shutoff and strainer requirements shall be forged brass construction, Nexus Model UY:

1. A minimum rating of 600 WOG, 325° F.
2. Interchangeable union end with FKM O-ring seal.
3. Multiple ¼” tapped ports for test plugs, vent, or other accessories.
4. Blowout proof stem with dual FKM O-ring seals.
5. Hard chrome plated stainless steel ball with Teflon seats.
6. A 20 mesh 304 stainless steel filter screen, accessible without affecting the valve piping.
7. A port in the filter cap for a blowdown/drain valve.

L. Combination Strainer/Butterfly Valves (2½” and larger) used for supply side shutoff and strainer requirements shall be cast or gray iron construction, Nexus Model SXFV:

1. A minimum rating of 175 psi WP, 250° F.
2. 125# Class flanges (mates to 150# Class flanges) and lug pattern butterfly valve.
3. Multiple ¼” tapped accessory ports across the filter screen.
4. A flanged end cap with a ¾” port for a blowdown/drain valve standard thru 8” size.
5. A ¾” port for thermometer well.
6. A 304 stainless steel screen, with perforations 0.045” thru 3”, and 0.125” thru 8”.

M. Y-Strainers (2½” and smaller) shall be forged brass body, Nexus Model UYX:

1. ¼” tapped accessory ports.
2. A rating of 600 WOG, 325° F.
3. A 20 mesh 304 stainless steel filter screen, removable without affecting the strainer piping.
4. A port in the filter cap for a blowdown/drain valve.

N. Y-Strainers (2½” and larger) shall be 125# Class flanged cast or ductile iron body, Nexus Model SXF:

1. Multiple ¼” tapped accessory ports across the filter screen.
2. A flanged end cap with a ¾” port for a blowdown valve standard thru 8” size.
3. A ¾” port for thermometer well.
4. A 304 stainless steel screen, with perforations 0.045” thru 3”, and 0.125” thru 8”.

O. Blowdown/Drain Valves shall be forged brass ball valve construction, Nexus Model BD:

1. A minimum rating of 600 WOG, 325° F.
2. Blowout proof stem with dual FKM O-ring seals.
3. Hard chrome plated brass ball with Teflon seats.
4. A ¾” hose end and nylon / brass cap with retainer to protect threads.

P. Unions (2” and smaller) shall be forged brass, Nexus Model UU:

1. A minimum of 600 psi WP, 325° F.
2. Multiple ¼” tapped ports for test plugs, vent and/or drain valves.
3. FKM O-ring seal.

Q. Accessories to coil piping components shall conform to the following:

1. Nexus PT Pressure/Temperature test plugs shall be rated for 1000 psi, 325° F, with brass body, Nordel check plugs, and sealed cap.
2. Flexible hoses shall be designed for water, and fire retarding conform to ASTM codes E84-00, with stainless steel outer braid.
3. Hoses (½” thru 1”), Nexus UFHF.

   a. Shall have a Kevlar reinforced EPDM tube core, brass end fittings, and designed for a working pressure of 400 psi, 248°F.
   b. Provide dual union or swivel end fittings.

4. Hoses (1¼” thru 2”), Nexus UFHM:

   a. Shall have Rayon reinforced EPDM tube core, brass end fittings, and designed for a working pressure of 300 psi, 248° F. The (2½”) hose shall have stainless steel outer braid and carbon steel Sch. 40 fittings, and designed for a working pressure of 400 psi, 70º F.
   b. Provide least one union or swivel end fitting

5. Nexus MV Manual air vents shall be of brass construction and rated at 250 psi, 450° F.
6. Shaft extensions (2” and smaller) for insulated pipe shall be at least 2¼” tall and constructed of brass
7. Chilled water systems: Provide extended pressure and temperature test plugs, manual air vents and handles. Extended handles shall not break the vapor barrier when operated.
8. Provide a temperature and pressure test/meter kit (Nexus #MKA) for use by MC during start-up, turn-over to Owner at project completion.

2.7 HYDRONIC SPECIALTIES

A. Manual Air Vent: Bronze body and nonferrous internal parts; 150-psig working pressure; 225 deg F operating temperature; manually operated with screwdriver or thumbscrew; with NPS 1/8 discharge connection and NPS 1/2 inlet connection.

B. Automatic Air Vent: Spirotherm Spirotop, or equal; maintenance-free, designed to vent automatically with float principle; solid-brass body and nonferrous internal parts; 150-psig working pressure; 270°F maximum temperature; NPS 1/2 inlet connection; ½” male thread at vent point for pressure-testing or remote venting of unwanted gases.

C. Expansion Tanks: Taco Model CA, or approved equal. Construction: Welded steel, designed, tested and stamped in accordance with ASME (BPV code sec VIII, div 1); supplied with National Board Form U-1, rated for working pressure of (125/150 psi), with flexible heavy duty butyl rubber bladder. Bladder shall be able to accept the full volume of the expansion tank and

shall be removable and replaceable. Bladder shall be NSF 61 rated for potable water service and shall be manufactured with FDA approved materials.

D. Expansion tank isolation valves: Provide valve lockouts: shall meet OSHA requirements to ensure ball valves are locked securely and effectively; for use on 1/4-turn valves to prevent tampering; polypropylene material resists chemicals, solvents, cracking & rust; provide padlock locking mechanism. Seton, Brady, or approved equal.

E. Air and Dirt Separator

1. Provide air and dirt removal devices of the size and type as shown on the plans. Air and dirt separation devices shall be Taco 4900 Series or approved equal by Spirovent or Bell & Gossett.
2. Air and dirt removal device shall be constructed of steel designed and fabricated per Section VIII Division 1 of the ASME Boiler and Pressure Vessel Code with a maximum working pressure rating of 125 psi at 270°F.
3. Each air & dirt separator shall be equipped with a brass conical shaped air venting chamber designed to minimize system fluid from fouling the venting assembly. Air vent shall be furnished with a closeable port to prevent vent clogging during system fill. A brass flushing cock shall be located on the side of each separator to facilitate system fast-fill and the removal of floating impurities from the air / system fluid interface within the separator. A blowdown valve shall be provided by the unit manufacturer on the bottom of each air and dirt separator to allow cleaning as required.
4. The air & dirt separator shall employ the use of high surface area, stainless steel pall rings to achieve optimal separation of air & dirt from the system fluid. Screens made of 304-stainless steel are provided on the inlet and outlet of each separator to isolate the internals from the system. Units installed in open systems shall be provided with a removable top head for removal and cleaning of the internal coalescence media.
5. The supplier of the air & dirt separator shall furnish to the design engineer the results of independent air & dirt testing of a representative unit from the suppliers' standard product offering. Suppliers not providing these independent performance test results will not be accepted.

F. Y-Pattern Strainers: Strainers shall be Y-type with removable basket. Body shall have cast-in arrows to indicate direction of flow. Strainer screens shall have finished ends fitted to machined screen chamber surfaces to preclude bypass flow. Strainer element material shall be AISI Type 304 corrosion-resistant steel. Provide fine-mesh start-up strainers. Strainers in sizes 3-inch and smaller shall have screwed ends; Hammond 3010, or approved equal. Body material shall be cast bronze conforming to ASTM B584-C84400. Strainer bodies fitted with screwed screen retainers shall have straight threads and shall be gasketed with nonferrous metal. Strainer screens shall have perforations not to exceed 1/32". In sizes 4 and larger, strainers shall have flanged ends; Hammond 3030, or approved equal. Body material shall be cast iron conforming to ASTM A126 Class B. Strainer bodies fitted with bolted-on screen retainers shall have offset blowdown holes. Strainer screens shall have perforations not to exceed 1/16" (4" size); 1/8" (5" size and larger).

G. Pump differential bypass valve shall be designed to control the excess flow in the hydronic system by acting as a bypass. The differential bypass valve shall have a ¾" NPT male connection. The valve shall be constructed of brass body with stainless steel spring and EPDM seals. The valve shall be designed to operate at working pressures up to 150 PSIG and liquid

temperatures up to 230°F. The differential bypass valve shall be Xylem Bell & Gossett Model No. DB-3/4, or approved equal. Adjustment Range: 2 to 10 PSI; 9 GPM maximum flow.

2.8 WATER TREATMENT FOR CLOSED LOOP HYDRONIC SYSTEMS

A. Manufacturers: Subject to compliance with requirements, provide products by the following:

1. Sentinel
2. Anderson Chemical Company.
3. Aqua-Chem, Inc.
4. Barclay Water Management, Inc.
5. General Electric Company; GE Water & Process Technologies.
6. H-O-H Water Technology, Inc.
7. Metro Group, Inc. (The); Metropolitan Refining Div.
8. Nalco; an Ecolab company.
9. Watcon, Inc.

B. Performance Requirements

1. Provide water treatment for closed-loop hydronic systems.
2. Water quality for hydronic systems shall minimize corrosion, scale buildup, and biological growth for optimum efficiency of hydronic equipment without creating a hazard to operating personnel or the environment.
3. Base HVAC water treatment on quality of water available at Project site, hydronic system equipment material characteristics and functional performance characteristics, operating personnel capabilities, and requirements and guidelines of authorities having jurisdiction.
4. Closed hydronic systems, including shall have the following water qualities:

   a. pH: Maintain a value within 8.2 to 9.5.
   b. "P" Alkalinity: Maintain a value within 100 to 500 ppm.
   c. Total Hardness : <150 ppm as $caCO_3$.
   d. Chemical Oxygen Demand: Maintain a maximum value of 100 ppm.
   e. Soluble Copper: Maintain a maximum value of 0.20 ppm.
   f. TSS: Maintain a maximum value of 10 ppm.
   g. Ammonia: Maintain a maximum value of 20 ppm.
   h. Free Caustic Alkalinity: Maintain a maximum value of 20 ppm.
   i. Microbiological Limits:

      1) Total Aerobic Plate Count: Maintain a maximum value of 1000 organisms/mL.
      2) Total Anaerobic Plate Count: Maintain a maximum value of 100 organisms/mL.
      3) Nitrate Reducers: Maintain a maximum value of 100 organisms/mL.
      4) Sulfate Reducers: Maintain a maximum value of zero organisms/mL.
      5) Iron Bacteria: Maintain a maximum value of zero organisms/mL.

C. Bypass Chemical Feeder: Neptune Model DBF, J. L. Wingert Company, or approved equal.

1. The feeder shell shall be constructed of welded steel construction. The bypass feeder shall be rated at 200 psi and to 200°F. Capacity: 5 gallons minimum.

2. The tank shall have a wide mouth, 3-1/2” opening so that chemical addition can be performed without the need of a funnel. The bypass feeder shall have a continuous threaded closure requiring 2-1/2 turns to close and seal.
3. The cap shall be constructed of cast iron with an epoxy-coated underside to prevent corrosion and shall use a square ring gasket seal.
4. Provide a valve package with isolation valves, unions, drain tee, & miscellaneous installation nipples.

D. Chemicals: Specially formulated, based on analysis of makeup water, to prevent accumulation of scale and corrosion in piping and connected equipment.

PART 3 - EXECUTION

3.1 HYDRONIC PIPING APPLICATIONS – ABOVE GROUND

A. Hot Water, NPS 3 and Smaller: Type L drawn-temper copper tubing with pressed or soldered joints; Schedule 40 steel pipe with threaded joints.

B. Hot Water, NPS 4 and Larger: Schedule 40 steel pipe with welded or flanged joints.

3.2 VALVE APPLICATIONS

A. Hydronic Valve Applications: Shutoff Duty: Ball and butterfly valves. Throttling Duty: Globe, ball, and butterfly valves.

B. Provide shutoff duty valves at each branch connection to supply mains, at supply connection to each piece of equipment, unless only one piece of equipment is connected in the branch line.

C. Provide calibrated balancing valves in the return water line of terminal units, as indicated, and ass required to facilitate system balancing.

D. Provide pressure-reducing valves on hot-water generators and elsewhere as required to regulate system pressure.

3.3 HYDRONIC PIPING INSTALLATIONS

A. Refer to Division 23 Section "Common Work Results" for installation of:

1. Basic piping requirements.
2. Joint construction requirements.
3. Hanger, support, and anchor devices.
4. Firestopping
5. Sleeves and Escutcheons
6. Dielectric fittings
7. Valves
8. Mechanical Identification

B. Hydronic piping systems shall be provided to permit the system to be drained. Provide drains, consisting of a tee fitting, NPS 3/4 ball valve, and hose-end fitting with cap, at low points in piping system mains and elsewhere as required for system drainage.

C. Provide piping at a uniform grade of 0.2 percent upward in direction of flow. Pipe size at connections to equipment shall be distribution main size, not connection size. Reduce pipe sizes using eccentric reducer fitting installed with level side up. Unless otherwise indicated, install branch connections to mains using tee fittings in main pipe, with the takeoff coming out the bottom of the main pipe. For up-feed risers, install the takeoff coming out the top of the main pipe.

D. Provide safety valves on hot-water generators and elsewhere as required by the ASME Boiler and Pressure Vessel Code. Provide safety-valve discharge piping, without valves, to floor. Comply with the ASME Boiler and Pressure Vessel Code, Section VIII, Division 1, for installation requirements. Check the settings and operation of each safety valve, including valves furnished by heater manufacturer. Record settings.

E. Swing Connections for Expansion: Connect risers and branch connections to mains with at least five pipe fittings, including tee in main. Connect mains and branch connections to terminal units with flexible hoses at least four pipe fittings, including tee in main.

F. Terminal Equipment Connections
   1. Size for supply and return piping connections shall be same as for equipment connections.
   2. Provide control valves in accessible locations close to connected equipment.
   3. Arrange piping with offsets to allow for expansion, as well as terminal unit removal.

3.4 HYDRONIC SPECIALTIES INSTALLATION

A. Provide manual air vents at high points in piping, at heat-transfer coils, and elsewhere as required for system air venting. For automatic air vents in ceiling spaces or other concealed locations, provide vent tubing to nearest drain.

B. Air separator and expansion tank to be provided on the suction side of the system pumps. Expansion tank to be tied into system piping in close proximity to air separator and system fill line. Provide piping to compression tank with a 2 percent upward slope toward tank.

C. Expansion tanks: Vent and purge air from hydronic system, and ensure tank is properly charged with air to suit system design requirements.

3.5 CONTROL VALVE INSTALLATION

A. Perform the following as directed by the BAS contractor:

   1. Provide modulating control valves with minimum of 10 pipe diameters straight pipe at inlet and 5 pipe diameters straight pipe at outlet.
   2. Installation of immersion wells and pressure tappings, along with associated shut-off cocks.

3. Installation of flow switches.
4. Setting of automatic control valves or other control devices.

B. Valve submittals shall be coordinated for type, quantity, size, and piping configuration to ensure compatibility with pipe design.

C. Slip-stem control valves shall be installed so that the stem position is not more than 60 degrees from the vertical up position. Ball type control valves shall be installed with the stem in the horizontal position.

3.6 CHEMICAL TREATMENT

A. Perform an analysis of makeup water to determine type and quantities of chemical treatment needed to keep system free of scale, corrosion, and fouling, and to sustain the water characteristics described in Part 2.

B. Provide bypass chemical feeders in each hydronic system.

1. Provide in upright position with top of funnel not more than 48 inches above the floor.
2. Provide feeder in minimum NPS 3/4 bypass line, from main with full-size, full-port, ball valve in the main between bypass connections.
3. Provide NPS 3/4 pipe from chemical feeder drain to nearest equipment drain and include a full-size, full-port, ball valve.

C. Initial flushing: Remove loose dirt, mill scale, metal chips, weld beads, rust, and like deleterious substances without damage to any system component. Provide temporary piping or hose to bypass coils, control valves, exchangers and other factory cleaned equipment unless acceptable means of protection are provided and subsequent inspection of hide-out areas takes place. Isolate or protect clean system components, including pumps and pressure vessels, and remove any component which may be damaged. Open all valves, drains, vents and strainers at all system levels. Remove plugs, caps, spool pieces, and components to facilitate early debris discharge from system. Sectionalize system to obtain debris carrying velocity of 6 feet per second, if possible. Connect dead-end supply and return headers as necessary. Flush bottoms of risers. Provide temporary strainers where necessary to protect down-stream equipment. Supply and remove flushing water and drainage by various type hose, temporary and permanent piping and Contractor's booster pumps. Flush until clean as approved by the commissioning agent.

D. Fill system with fresh water and add liquid alkaline compound with emulsifying agents and detergents to remove grease and petroleum products from piping. Circulate solution for a minimum of 24 hours, drain, clean strainer screens, and refill with fresh water. Circulate systems at normal temperature to remove adherent organic soil, hydrocarbons, flux, pipe mill varnish, pipe joint compounds, iron oxide, and like deleterious substances not removed by flushing, without chemical or mechanical damage to any system component. Removal of tightly adherent mill scale is not required. Keep isolated equipment which is "clean" and where dead-end debris accumulation cannot occur. Sectionalize system if possible, to circulate at velocities not less than 6 feet per second. Circulate each section for not less than four hours. Blow-down all strainers, or remove and clean as frequently as necessary. Drain and prepare for final flushing.

E. Final Flushing: Return systems to conditions required by initial flushing after all cleaning solution has been displaced by clean make-up. Flush all dead ends and isolated clean equipment. Gently operate all valves to dislodge any debris in valve body by throttling velocity. Flush for not less than one hour.

F. Close and fill system as soon as possible after final flushing to minimize corrosion. Add initial chemical treatment and maintain water quality in ranges noted above for the first year of operation.

G. Fill systems that glycol solutions to the concentrations indicated in the equipment schedules.

3.7 FIELD QUALITY CONTROL

A. Prepare hydronic piping according to ASME B31.9 and as follows:

1. Leave joints, including welds, uninsulated and exposed for examination during test.
2. Provide temporary restraints for expansion joints that cannot sustain reactions due to test pressure. If temporary restraints are impractical, isolate expansion joints from testing.
3. Flush hydronic piping systems with clean water; then remove and clean or replace strainer screens.
4. Isolate equipment from piping. If a valve is used to isolate equipment, its closure shall be capable of sealing against test pressure without damage to valve. Provide blinds in flanged joints to isolate equipment.
5. Provide safety valve, set at a pressure no more than one-third higher than test pressure, to protect against damage by expanding liquid or other source of overpressure during test.

B. Perform the following tests on hydronic piping:

1. Use ambient temperature water as a testing medium unless there is risk of damage due to freezing. Another liquid that is safe for workers and compatible with piping may be used.
2. While filling system, use vents installed at high points of system to release air. Use drains installed at low points for complete draining of test liquid.
3. Isolate expansion tanks and determine that hydronic system is full of water.
4. Subject piping system to hydrostatic test pressure that is not less than 1.5 times the system's working pressure. Test pressure shall not exceed maximum pressure for any vessel, pump, valve, or other component in system under test. Verify that stress due to pressure at bottom of vertical runs does not exceed 90 percent of specified minimum yield strength or 1.7 times the "SE" value in Appendix A in ASME B31.9, "Building Services Piping."
5. After hydrostatic test pressure has been applied for at least 10 minutes, examine piping, joints, and connections for leakage. Eliminate leaks by tightening, repairing, or replacing components, and repeat hydrostatic test until there are no leaks.

6. After MegaPress fittings have been installed a “two step test” shall be followed. Pressurize the system with application appropriate test medium, water between 15 and 85 psi, or air/dry nitrogen between .5 and 45 psi. Check the pressure gauge for pressure loss. If the system does not hold pressure, walk the system and check for un-pressed fittings. Should you identify an un-pressed fitting/s ensure the pipe is fully inserted into the fitting, and properly marked, prior to pressing the joint. After appropriate repairs have been made, retest the system per local code, or specification requirements, not to exceed 600 psig with water or 200 psig when using air.
7. Prepare written report of testing.

C. Perform the following before operating the system:

1. Open manual valves fully.
2. Inspect pumps for proper rotation.
3. Set makeup pressure-reducing valves for required system pressure.
4. Inspect air vents at high points of system and determine if all are installed and operating freely (automatic type), or bleed air completely (manual type).
5. Set temperature controls so all coils are calling for full flow.
6. Inspect and set operating temperatures of hydronic equipment to specified values.
7. Verify lubrication of motors and bearings.

END OF SECTION

SECTION 23 21 23 - HYDRONIC PUMPS

PART 1 - GENERAL

1.1 RELATED DOCUMENTS

A. Drawings and general provisions of the Contract, including General and Supplementary Conditions and Division 1 Specification Sections, apply to this Section.

B. Related Sections include the following:

1. Division Section: “Common Work Results”

1.2 SUMMARY

A. This Section includes hydronic pumps and accessories.

1.3 ACTION SUBMITTALS

A. Product Data: For each type of pump. Include certified performance curves and rated capacities, operating characteristics, furnished specialties, final impeller dimensions, and accessories for each type of product indicated. Indicate pump's operating point on curves.

B. Wiring Diagrams: Detail wiring for power, signal, and control systems and differentiate between manufacturer-installed and field-installed wiring.

1.4 CLOSEOUT SUBMITTALS

A. Operation and Maintenance Data: For pumps to include in emergency, operation, and maintenance manuals.

1.5 QUALITY ASSURANCE

A. UL Compliance: Fabricate and label pumps to comply with UL 778, "Motor-Operated Water Pumps," for construction requirements.

B. Electrical Components, Devices, and Accessories: Listed and labeled as defined in NFPA 70, Article 100, by a testing agency acceptable to authorities having jurisdiction.

1.6 DELIVERY, STORAGE, AND HANDLING

A. Manufacturer's Preparation for Shipping: Clean flanges and exposed machined metal surfaces and treat with anticorrosion compound after assembly and testing. Protect flanges, pipe openings, and nozzles with wooden flange covers or with screwed-in plugs.

B. Store pumps in dry location.

C. Retain protective covers for flanges and protective coatings during storage.

D. Protect bearings and couplings against damage from sand, grit, and other foreign matter.

E. Comply with pump manufacturer's written rigging instructions.

1.7 COORDINATION

A. Coordinate electrical power with Division 26.

PART 2 - PRODUCTS

2.1 MANUFACTURERS

A. Manufacturers: Subject to compliance with requirements, provide products by one of the following:

1. Taco
2. Armstrong
3. Bell & Gossett ITT
4. PACO
5. Grundfos
6. Patterson
7. Wilo

2.2 GENERAL PUMP REQUIREMENTS

A. Pump Units: Factory assembled and tested.

B. Motors: Include built-in, thermal-overload protection and grease-lubricated ball bearings. Select each motor to be non-overloading over full range of pump performance curve. Comply with NEMA MG 1 requirements for thermally protected motors.

C. Motors Indicated to be premium efficiency, and shall meet or exceed all NEMA Standards Publication MG1 requirements and comply with NEMA premium efficiency levels Class B temperature rise; Class F insulation.

D. Motors used with VFD’s: Ratings, characteristics, and features coordinated with and approved by controller manufacturer.

1. Provide AEGIS® Shaft Grounding Ring (SGR) on either DE or NDE of motor to divert current away from the bearings and protect bearings in attached equipment.
2. Windings: Copper magnet wire with moisture-resistant insulation varnish, designed and tested to resist transient spikes, high frequencies, and short time rise pulses produced by pulse-width modulated inverters.
3. Inverter-Duty Motors: Class F temperature rise; Class H insulation.

2.3 WET ROTOR CIRCULATORS

A. Constant Speed Circulators.

1. The circulator shall be water lubricated, direct drive, requiring no seals, couplers or bearing assembly. Ceramic shaft and carbon bearing construction.
2. The circulator shall be repairable in-line without removal of the circulator from the piping using a stainless-steel replaceable cartridge. Cartridge shall be provided with a 3-year warranty.
3. Provide "-IFC" integral flow check.
4. For chilled water pumps provide an Anti-Condensate Baffle to Protect Motor Windings.
5. Circulator can be either direct acting or reverse acting. Circulator shall be rated for 125 psi working pressure. Circulator shall bear UL label.

B. Variable Speed Circulators.

1. The circulator shall be water lubricated, direct drive, requiring no seals, couplers or bearing assembly. Ceramic shaft and carbon bearing construction.
2. The circulator shall be repairable in-line without removal of the circulator from the piping using a stainless-steel replaceable cartridge. Cartridge shall be provided with a 3-year warranty.
3. Circulator can be either direct acting or reverse acting. Circulator shall be rated for 125 psi working pressure. Circulator shall bear UL label.
4. Circulator shall have sensors included, snap in PC Board, Fuse Board, Plug-in Low Voltage Wiring Terminal, Adjustable Setpoint, Adjustable Temperature Difference, LED Status Panel, Selectable Output Response Speed, Linear or Logarithmic Output, and Pump Exercise.

2.4 WET ROTOR CIRCULATORS – 3-SPEED GRUNDFOS UPS

A. Description

1. Provide 3-speed pumps as per plans and pump schedule.
2. The pump shall be a standard product of a single pump manufacturer. The pump and motor shall be designed and built by the same manufacturer.
3. The wet rotor circulator pump shall be certified and listed by UL (1Z28 Water circulating pump) and/or CSA (Water Circulating Pump) for conformance to U.S. and Canadian Standards to operate at maximum 248˚F and minimum 14˚F water.
4. The pumps shall be capable of operating continuously at 248°F.

B. Pumps

1. The pumps shall be of the quiet wet rotor in-line design.
2. The head-capacity curve shall have a steady rise in head from maximum to minimum flow within the preferred operating region.
3. The pump housing shall be of the in-line type and have a stainless steel neck ring to minimize recirculation and increase pump efficiency.
4. The impellers shall be Composite material PES. The impellers shall be secured to the shaft with a neck ring and a nut.

5. Pumps shall have fiber optic indicator lights for operation indication and trouble shooting.
6. The pumps shall have radial tungsten carbide sleeve bearings for extended life. Metal impregnated carbon radial bearings shall not be acceptable.
7. Pump Construction.

    a. Pump housing: Cast iron EN-GJL-200
    b. Impellers: 304 Stainless Steel or Composite PES
    c. Shaft: Ceramic
    d. Bearings: Tungsten Carbide
    e. Axial thrust bearing: Carbon MY106
    f. Shaft journals/inner bearings: Silicon Carbide
    g. O-rings: EPDM
    h. Bearing plate: 304 Stainless Steel

C. Integrated Motors
1. Each motor shall be of the asynchronous squirrel cage design and tested with the pump as one unit by the same manufacturer.
2. The stator housing shall be made of pressure die cast aluminum.
3. The motor shall be cooled by the pumped fluid.
4. Motor shall be self-ventilating. The stator housing shall have nickel plated brass inspection screw.
5. Minimum insulation class for the motors shall be Class F.
6. The terminal box shall be made of black composite material. Enclosure class shall be IP44.

2.5 VARIABLE SPEED WET ROTOR CIRCULATOR PUMPS – GRUNDFOS MAGNA3

A. Pump shall be a Grundfos Magna3 or approved equal; in-line wet rotor design. Oil lubricated pumps and shaft coupled pumps shall not be accepted. The pump shall be a standard product of a single pump manufacturer. The pump, motor, and variable speed drive shall be an integral product designed and built by the same manufacturer.

B. The enclosure shall be marked “Enclosure Type 2.”

C. The pump shall be certified and listed by a Nationally Recognized Test Laboratory (NRTL) for U.S. and Canada to comply with UL778 and UL 60730-1A.

D. Ratings

1. Maximum Pressure: 175 PSIG
2. Minimum Media Temperature: 14 °F
3. Maximum Media Temperature: 230 °F
4. Maximum Continuous Media Temperature: 203 °F
5. Maximum Sound Pressure Level: 43dB(A)
6. Voltage: 1x115V +/-10% or 1x208-230V +/-10% as required.
7. Maximum Energy Efficiency Index: 0.20

E. Pump Construction

1. Pump housing: Cast Iron: EN-JGL-250 with Cataphorese surface treatment
2. Stainless Steel: 304 Stainless
3. Impellers: Composite PES 30% GF
4. Rotor Can: PPS reinforced with Carbon Fiber(Fortran MT9141L PPS-GF40)
5. Rotor Cladding: 316 Stainless Steel
6. Stator Housing: Aluminum
7. Shaft: 316L Stainless Steel
8. Thrust Bearing: Axial: Carbon Graphite, Radial: ceramic Alumina Hilox 961
9. O-Rings: EPDM
10. Bearing Plate: 304 Stainless Steel
11. Neck Ring: 304 Stainless Steel
12. Control Box: Polycarbonate

F. Motor

1. Motor shall be 4-pole permanent-magnet (PM motor) and tested with the pump as one unit by the same manufacturer. Conventional asynchronous squirrel-cage motors shall not be acceptable.
2. Each motor shall be of the integrated Variable Speed Drive design consisting of a motor and a Variable Frequency Drive (VFD) built and tested as one unit by the same manufacturer.
3. The stator housing shall be made of pressure die cast aluminum.
4. The motor shall be cooled by the pumped fluid
5. The power electronics shall be cooled to the ambient air.
6. The Motor shall be self-ventilating.
7. Minimum insulation class for the motor shall be Class F.
8. The integrated VFD control shall utilize an energy optimization algorithm to minimize energy consumption by reducing the factory-set setpoint and adjust to system characteristics. This shall be accomplished without the need of any external sensors or input.

G. The pump shall have the following control mode and operating modes:

1. AUTO*ADAPT* – During operation, the pump automatically reduces the factory-set setpoint and adjusts it to the actual system characteristic. Manual setting of the setpoint is not possible.
2. FLOW*LIMIT* - It shall be possible for the user to select a maximum flow that the pump shall not exceed in order to eliminate the need for additional throttling valves. The pump shall operate per selected control mode but will limit speed to not exceed the user specified flow limit
3. FLOW*ADAPT* – The pump shall operate in the AUTOADAPT control mode with FLOWLIMIT enabled.
4. Proportional Pressure – The head delivered shall be reduced from a manual setpoint linearly in accordance with decrease in flow demand in the system
5. Constant Pressure – A manual set, constant head is maintained, irrespective of flow up to the maximum speed of the pump.
6. Constant Curve – The pump runs as an uncontrolled pump by the means of a set of pump curves. The pump curve adjustable between maximum and minimum from the control panel or through a wireless remote control.

7. Constant Temperature – the pump shall adjust speed to maintain a constant media temperature in the flow pipe in which the pump is installed.
8. Constant Differential Temperature - the pump shall adjust speed to maintain a constant temperature drop between the flow pipe in which the pump is installed and a user installed temperature sensor.
9. Alternating Operation – Two single head pumps or two heads of a dual head pump shall communicate wirelessly to one another. In alternating operation, only one pump shall operate at a time. The operation shall alternate based on time or energy to ensure even run time of both pumps. If a pump stops due to fault the other pump shall take over automatically.
10. Back-Up Operation – Two single head pumps or two heads of a dual head pump shall communicate wirelessly to one another. In Back-Up operation one pump shall operate continuously. If the duty pumps stops due to fault the back-up pump shall take over automatically.
11. Cascade Operation - Two single head pumps or two heads of a dual head pump shall communicate wirelessly to one another. Two pumps shall operate together in constant pressure control. The pump controller shall determine when to operate a single pump or both pumps to meet demands. While both pumps operate, they shall run at the same speed.

H. Interface and Communication

1. The pump shall have an integrated operator interface consisting of:

   a. Minimum 2.4” (measured diagonally) color TFT display
   b. 7 push buttons for navigation of menu
   c. Push Buttons must be able to operate at minimum 25,000 times
   d. Push Buttons must be isolated from the main supply by reinforced insulation according to UL60730
   e. LEDs to signal pump status for quick indication

2. The pump shall have a sensor integrated directly into the pump housing with 4 lines consisting of Ground, Supply, and two signals for Differential Pressure and Media Temperature.

   a. Sensor Supply shall be 4.8V DC +/- 2% at 20mA referenced to Ground. The supply must be able to withstand a permanent short circuit.
   b. The electrical values for the signal shall be 4.8V DC +/-2% referenced to ground.

3. The pump module shall have one analog input configurable for either 4-20mA or 0-10VDC input signal configurable for external Temperature or Pressure sensor, or Setpoint influence. Sensor input shall have three wires for Ground, Supply, and Signal. The Supply for external analog input shall be 24V DC +/-10% at 22mA reference to Ground. The supply must be able to withstand a permanent short circuit. Connection can be made to a screw terminal capable of wire sizes up to AWG16.
4. The pump shall have 3 Digital Inputs galvanically isolated from the main supply by a reinforced insulation according to UL60730.

   a. Start/Stop –Used to start or start the pump. The pump shall be enabled when connected to common ground by an external potential free short circuit. An open

circuit to this input shall disable the pump. Connection can be made to a screw terminal capable of wire sizes up to AWG16.

b. Minimum – used to force the pump to run at minimum load (curve). When connected to common ground by an external potential free short circuit the pump must run at minimum load. Connection can be made to a screw terminal capable of wire sizes up to AWG16.

c. Maximum - used to force the pump to run at maximum load (curve). When connected to common ground by an external potential free short circuit the pump must run at maximum load. Connection can be made to a screw terminal capable of wire sizes up to AWG16.

5. The pump module shall have two Output Relays. Each relay shall be configurable for Alarm, Reading, or Operating indication. Each relay must have three screw terminals see above. Output relays contacts shall be rated for maximum 250VAC at 2A and minimum 5VDC at 20mA. Each must have galvanic isolation from the internal supply by reinforced insulation according to UL60730.

6. Shall be capable of accepting an optional add-on module for integration into Building Management Systems:

   a. LonWorks
   b. BACnet
   c. Modbus

7. The pump module shall have wireless connectivity for two pumps to communicate with one another or for the pump to communicate to a mobile device with additional hardware.

   a. Communication range shall at minimum within 30ft of the pump without walls or barriers.
   b. Two identical pumps shall be capable of wireless communication with one another to operate as a two-pump system in:

      1) Duty/Standby
      2) Alternating Mode, pumps alternate operation every 24 hours
      3) Cascade operation with both pumps running simultaneously in constant differential pressure mode.

2.6 SPLIT COUPLED INLINE PUMPS – GRUNDFOS VSLE

A. The pump, integrated VFD motor, coupling, and coupling guard shall be factory assembled at the pump manufacturer's facility. The pump manufacturer shall have complete unit responsibility.

B. The pumps shall be split coupled, single stage, in-line design, cast iron bronze fitted construction.

C. The pumps shall have the following features:

1. All pumps shall be of the back-pull-out design so that the rotating element can be removed from the casing without disconnecting the suction or discharge piping. The casing material shall be close-grained cast iron ASTM A48 - Class 30 with a minimum

tensile strength of 30,000 P.S.I. Volute shall have integrally cast suction and discharge connections, gauge ports at nozzles, and vent and drain ports. Pumps suction and discharge shall be of same size. Pumps with 3" and above suction/discharge sizes shall have double volute casing and shall have suction splitter to reduce pre-rotation and improve efficiency. Casings shall be designed for scheduled working pressure and can withstand hydrostatic test at 150% of the maximum working pressure under which the pump could operate at design speed.

2. Pumps shall be fitted with bronze renewable case wear rings.
3. Suction and discharge flanges shall be drilled to ANSI Class 125# standards and be machined flat face.
4. The pump shaft shall be of solid stainless steel AISI 303.
5. The pump manufacturer shall recommend the proper inside mechanical seal based on the pressure, temperature and liquid outlined on the equipment schedule. Mechanical seals, at a minimum, shall have ceramic stationary seats, carbon rotating rings, Buna elastomers and stainless-steel hardware. Application of a mechanical seal shall be internally flushed type, without requiring external flushing lines. Seals shall be capable of being inspected and easily replaced without removing the piping or volute.
6. Recirculation line of nylon tubing with brass fitting shall be provided to vent the mechanical seal.
7. Impeller shall be of the enclosed Francis vane type, single suction design, made of silicon bronze, ASTM B584 C87600, both hydraulically and dynamically balanced to ISO 1940-1:2003 balance grade G6.3 and keyed to the shaft. The impeller shall be trimmed to meet the specific hydraulic requirements.
8. Pump Construction. The standard material of construction for the pump shall be as below. Special material shall be available as option to suit the liquid pumped.

    a. Volute: Cast Iron ASTM A48 - Class 30 or Ductile Iron ASTM A536- Class 65
    b. Case Wear ring: Tin Bronze ASTM B584-90500
    c. Impeller: Silicon Bronze ASTM B584 C87600
    d. Shaft: Stainless Steel AISI 303
    e. Coupling: Ductile Iron ASTM 536- Class 65
    f. Motor Bracket: Cast Iron ASTM A48- Class 30
    g. Mechanical Seals: Carbon – Ceramic with Buna Elastomers and Stainless-Steel hardware
    h. Recirculation Line: Nylon Tubing with Brass Fittings

9. Pump rotation shall be clockwise as viewed from the motor end.
10. Pump shall be connected to the drive motor with integrated VFD by a rigid, ductile iron, radially split coupling capable of withstanding all torsional, radial and axial loads. The coupling design shall facilitate alignment of the motor and pump shaft. The coupling design shall also permit replacement of mechanical seal without requiring removal of the drive motor.
11. The pump manufacturer shall provide an OSHA approved coupling guard, which shall be mounted between the pump and motor.
12. Pump shall be mounted on a heavy-duty cast-iron support stand or on steel flange supports for floor mounting.
13. Pump shall be of a maintainable design for ease of maintenance and should use machine fit parts that are easily disassembled.
14. Each pump shall be painted with one coat of high-quality factory approved paint and name-plated before shipment from the factory.
15. Pumps shall be manufactured and assembled in an ISO-9001 certified facility.

D. Integrated Variable Frequency Drive Motor

1. Each motor shall be of the Integrated Variable Frequency Drive design consisting of a motor and a Variable Frequency Drive (VFD) with a built-in pump system controller. The complete VFD/motor assembly shall be built and tested as one unit by the same manufacturer.
2. The VFD/motor shall have an IP55 (TEFC) enclosure rating as a complete assembly. The motor shall have a standard NEMA C-Face, Class F insulation with a Class B temperature rise.
3. The VFD shall be of the PWM (Pulse Width Modulation) design using up to date IGBT (Insulated Gate Bipolar Transistor) technology.
4. The VFD shall convert incoming fixed frequency three-phase AC power into a variable frequency and voltage for controlling the speed of the motor. The motor current shall closely approximate a sine wave. Motor voltage shall be varied with frequency to maintain desired motor magnetization current suitable for centrifugal pump control and to eliminate the need for motor de-rating.
5. The VFD shall have, as a standard component, an RFI filter (Radio Frequency Interference) to minimize electrical noise disturbances between the power electronics and the power supply. The VFD/motor shall meet all requirements of the EMC directive concerning residential and light industry equipment (EN 61800-3).
6. The VFD shall have a minimum of two skip frequency bands which can be field adjustable.
7. The VFD shall have internal solid-state overload protection designed to trip within the range of 125-150% of rated current.
8. The VFD/motor shall include protection against input transients, loss of AC line phase, over-voltage, under-voltage, VFD over-temperature, and motor over-temperature. The motor over-temperature protection shall consist of three series connected PTC thermistors, one for each motor phase.
9. The VFD/motor shall provide full nameplate output capacity (horsepower and speed) within a balanced voltage range.
10. Automatic De-Rate Function: The VFD/motor shall reduce speed during periods of overload allowing for reduced capacity pump operation without complete shut-down of the system. Detection of overload shall be based on continuous monitoring of current, voltage and temperature within the VFD/motor assembly.
11. The VFD/motor shall have, as a minimum, the following input/output capabilities:

    a. Speed Reference Signal: 0-10 VDC, 4-20mA
    b. Digital remote on/off
    c. Fault Signal Relay (NC or NO)
    d. Fieldbus communication port (RS485)

12. Motor drive end bearings shall be adequately sized so that the minimum L10 bearing life is 17,500 hours at the minimum allowable continuous flow rate for the pump at full rated speed.

E. Pump System Controller And User Interface

1. The pump system controller (Proportional-Integral) shall be an optional component of the integrated variable frequency drive motor developed and supported by the pump manufacturer.

2. The pump system controller shall have an easy to use interface mounted on the VFD/motor enclosure. Pump system start/stop and set-point adjustment shall be possible through the use of two push buttons located on the drive enclosure.
3. The VFD/motor shall be capable of receiving a remote analog set-point (4-20mA or 0-10 VDC) as well as a remote on/off (digital) signal.
4. Pump status and alarm state shall be indicated via two LED lights located on the VFD/motor enclosure.
5. Advanced programming and troubleshooting shall be possible via an infra-red hand held programmer or a field connected personal computer. Pump system programming (field adjustable) shall include as a minimum the following:

    a. System Pressure set-point, psig
    b. System start pressure, psig
    c. System Stop pressure, psig
    d. Minimum Pump Speed, %
    e. Pressure Transducer supply/range
    f. Maximum Pump Speed, %
    g. System Time (Proportional Gain) Integral Action Time

6. The infra-red programmer shall be capable of displaying the following status readings:

    a. Pump Status (on, off, min., max.)
    b. System Set-point, psig
    c. Actual system pressure, psig
    d. Remote set-point, %
    e. Pump speed, rpm
    f. VFD/Motor input power, kW
    g. VFD/Motor total cumulative kWh
    h. VFD/Motor total operating hours

7. The infra-red programmer shall also be capable of displaying the following alarms, with the last five alarms stored in memory:

    a. Loss of sensor signal
    b. Loss of external set-point signal
    c. Under-voltage & Over-voltage
    d. Motor overload (blocked pump)
    e. Motor over-temperature
    f. Drive over-temperature
    g. Drive Over-current

F. Sequence Of Operation: A pressure transducer shall be factory installed on the pump head. Pressure transducers shall be made of 316 stainless steel. Transducer accuracy shall be +/- 1.0% full scale with hysteresis and repeatability of no greater than 0.1% full scale. The output signal shall be 4-20 mA with a supply voltage range of 9-32 VDC. The system controller shall receive an analog signal (4-20Ma) from the factory installed differential pressure transducer indicating the actual inlet and outlet pressures. When a flow demand is detected (system pressure drops below the start pressure) the VFD/motor shall start and increase speed until the actual system pressure matches the system set-point. As flow demand changes (increases or decreases), the speed of the pump shall be adjusted to maintain the calculated system set-point pressure and flow.

1. Plug-and-pump solution speeds installation, commissioning and startup due to integrated components
2. Factory mounted and with a pre-configured differential pressure sensor, system arrives optimized and ready for installation and operation
3. Proportional pressure control logic shall be employed to adjust the setpoint to simulate operation of remote sensor, delivering maximum energy optimization via the factory installed sensor reducing labor, installation time and cost
4. The pump features “closed loop control” including proportional differential pressure and constant differential pressure; and “open loop control” from control signal in order for you to optimize your HVAC pumping application.
5. Proportional differential pressure control saves energy by adjusting the setpoint pressure based on flow rate - lower setpoint at lower flows and higher setpoint at higher flows. This control adjust pump performance based on how friction head affects the head requirement needed from the pump. Proportional differential pressure control gives you the ability to simulate a remote mounted DP sensor.

2.7 PUMP SPECIALTY FITTINGS

A. Pumps without VFD’s shall be fitted with a discharge multi-purpose balancing valve or other means of providing system balance, isolation, and check feature for reverse flow. The valve shall be straight or angle pattern and shall be field convertible between the two. The valve shall be ductile iron and rated for 250 psi working pressure. The valve flanges shall be matched to suit the working pressure of the piping components on the job; with either ANSI class125 psi flanges or ANSI class 250 flanges. The valve shall include the following components; non-slam check valve with spring-loaded bronze disc and seat, stainless steel stem, and calibrated adjustment permitting flow regulation. Valve shall be serviceable under full system pressure. The valve shall be a Taco model MPV-Plus Two multi-purpose valve or equivalent.

B. Pumps with VFD’s shall have a check valve and shutoff valve instead of the multi-purpose valve.

PART 3 - EXECUTION

3.1 EXAMINATION

A. Examine equipment foundations for compliance with requirements for installation. Examine roughing-in for piping systems to verify actual locations of piping connections before pump installation. Proceed with installation only after unsatisfactory conditions have been corrected.

3.2 PUMP INSTALLATION

A. Pumps and equipment shall be provided per manufacturer’s recommendations and according to the standards of the Hydraulics Institute.

B. Provide pumps to provide access for periodic maintenance, including removing motors, impellers, couplings, and accessories.

C. Pipe connections to pumps shall be made in such a manner so as not to exert any stress on pump housings. If necessary to meet this requirement, provide additional pipe supports and flex connectors.

D. Reduction from line size to pump connection size shall be made with eccentric reducers attached to the pump with tops flat to allow continuity of flow and to avoid air pockets.

E. Provide connector/expansion joints at the pump suction and discharge as indicated.

F. Pumps shall **NOT** be run dry to check rotation.

G. Suspend in-line pumps in accordance with manufacturers recommendations.

H. The pump setup shall be Proportional-pressure control: The pump head is reduced at falling water demand and increased at rising water demand. The pumps have been factory-set to proportional pressure - the head corresponds to 50 % of the maximum pump head. Many systems will operate satisfactorily with the factory setting, but he system shall be optimized by changing this setting per pump manufacturer’s instructions.

3.3 CONNECTIONS

A. Piping installation requirements are specified in other Division 23 Sections. Drawings indicate general arrangement of piping, fittings, and specialties.

B. Provide piping adjacent to machine to allow service and maintenance.

C. Connect piping to pumps. Provide valves that are the same size as piping connected to pumps.

D. Provide suction and discharge pipe sizes equal to or greater than diameter of pump nozzles. Provide fittings and specialties as detailed on the plans.

E. Provide a single gage with three-input selector valve; locate at pump suction and discharge tappings, also strainer.

F. Provide electrical connections for power, controls, and devices. Electrical power and control wiring and connections are specified in Electrical Specification Sections. Ground equipment. Tighten electrical connectors and terminals according to manufacturer's published torque-tightening values. If manufacturer's torque values are not indicated, use those specified in UL 486A and UL 486B.

3.4 COMMISSIONING

A. Verify that pumps are installed and connected according to the Contract Documents. Verify that electrical wiring installation complies with manufacturer's written instructions and the Contract Documents. Complete installation and startup checks according to manufacturer's written instructions.

B. Pumps with VFD’s or packaged controls: The control package manufacturer’s factory trained representative shall provide start-up of the packaged pumping system. This start-up shall

include verification of proper installation, system initiation, adjustment and fine tuning. Start-up shall not be considered complete until the sequence of operation, including all alarms, has been sufficiently demonstrated to the Owner or Owner's designated representative. This jobsite visit shall occur only after all hook-ups, tie-ins, and terminations have been completed and signed-off on the manufacturer's start-up request form.

C. Check piping connections for tightness.

D. Clean strainers on suction piping.

E. Perform the following startup checks for each pump before starting:

1. Verify bearing lubrication.
2. Verify that pump is free to rotate by hand and that pump for handling hot liquid is free to rotate with pump hot and cold. If pump is bound or drags, do not operate until cause of trouble is determined and corrected.
3. Verify that pump is rotating in the correct direction.

F. Prime pump by opening suction valves and closing drains, and prepare pump for operation. Start motor. Open discharge valve slowly.

G. Refer to Division 23 Section "Testing, Adjusting, and Balancing" for detailed requirements for testing, adjusting, and balancing hydronic systems.

3.5 DEMONSTRATION

A. Engage a factory-authorized service representative to train Owner's maintenance personnel to adjust, operate, and maintain hydronic pumps as specified below:

1. Train Owner's maintenance personnel on procedures and schedules for starting and stopping, troubleshooting, servicing, and maintaining pumps.
2. Review data in maintenance manuals.

END OF SECTION

SECTION 23 31 13 - DUCTWORK

PART 1 - GENERAL

1.1 RELATED DOCUMENTS

A. Drawings and general provisions of the Contract, including General and Supplementary Conditions and Division 1 Specification Sections, apply to this Section.

B. Related Sections include the following:

1. Division 8 for Access Doors
2. Division 23 Section "Common Work Results"
3. Division 23 Section "Air Terminals"
4. Division 23 Section "Diffusers, Registers, and Grilles."
5. Division 23 Control Section
6. Division 23 Section "Testing, Adjusting, and Balancing".

1.2 SUMMARY

A. This Section includes ducts and accessories.

B. Wood shop dust collection ductwork and accessories.

1.3 SYSTEM DESCRIPTION

A. Drawings show the general layout of ductwork and accessories but do not show all required fittings and offsets that may be necessary to connect ducts to equipment, diffusers, grilles, etc., and to coordinate with other trades. Fabricate ductwork based on field measurements. Provide all necessary fittings and offsets. Coordinate with other trades for space available and relative location of HVAC equipment and accessories on ceiling grid. Duct sizes on the drawings are inside dimensions, which may be altered by Contractor to other dimensions with the same air handling characteristics where necessary to avoid interferences and clearance difficulties.

B. The contractor must comply with the enclosed specification in its entirety. If on inspections, the engineer finds changes have been made without prior written approval, the contractor will make the applicable changes to comply with this specification, at the contractor’s expense.

C. At the discretion of the engineer, sheet metal gauges, and reinforcing may be randomly checked to verify all duct construction is in compliance.

1.4 PERFORMANCE REQUIREMENTS

A. Delegated Duct Design: Duct construction, including sheet metal thicknesses, seam and joint construction, reinforcements, and hangers and supports, shall comply with SMACNA's "HVAC

Duct Construction Standards - Metal and Flexible" and performance requirements and design criteria indicated in "Duct Schedule" Article.

B. Airstream Surfaces: Surfaces in contact with the airstream shall comply with requirements in ASHRAE 62.1. Exception: Sheet metal surfaces and fasteners.

1.5 ACTION SUBMITTALS

A. Product Data: For each type of the following products:

1. Sealants and gaskets.

B. Shop Drawings:

1. Fabrication, assembly, and installation, including plans, elevations, sections, components, and attachments to other work.
2. Factory- and shop-fabricated ducts and fittings.
3. Fittings.
4. Reinforcement and spacing.
5. Seam and joint construction.
6. Penetrations through fire-rated and other partitions.
7. Equipment installation based on equipment being used on Project.
8. Hangers and supports, including methods for duct and building attachment.

C. Delegated-Design Submittal:

1. Sheet metal thicknesses.
2. Joint and seam construction and sealing.
3. Reinforcement details and spacing.
4. Materials, fabrication, assembly, and spacing of hangers and supports.

D. Ductwork Specialties Product Data; provide for the following:

1. Sealant
2. Duct-mounted access doors and panels.
3. Flexible ducts.
4. Backdraft dampers.
5. Manual-volume dampers: Damper manufacturer's printed application and performance data including pressure, velocity and temperature limitations shall be submitted for approval.
6. Life Safety dampers: Provide complete submittal information (including installation instructions) and the manufacturer's certification of compliance with these specifications for approval prior to bidding. Contractor shall include damper manufacturer’s Installation Instructions as part of the submittal. These instructions shall describe the applicable requirements for damper sleeve thickness, retaining angles, and methods of attachment, duct-to-sleeve connections, preparation of wall or floor openings, and all other requirements to provide an installation equivalent to that tested by the damper manufacturer during the UL Standard 555 qualification procedures. Contractor shall detail any proposed installations that deviate from these manufacturer’s instructions and explain the needed deviations.

1.6 INFORMATIONAL SUBMITTALS

A. Coordination Drawings: Plans, drawn to scale, on which the following items are shown and coordinated with each other, using input from installers of the items involved:

1. Duct installation in congested spaces, indicating coordination with general construction, building components, and other building services. Indicate proposed changes to duct layout.
2. Suspended ceiling components.
3. Structural members to which duct will be attached.
4. Size and location of initial access modules for acoustical tile.
5. Penetrations of smoke barriers and fire-rated construction.
6. Items penetrating finished ceiling – examples: lighting fixtures, sprinklers, etc.
7. Areas of building where coordination drawings are required:

   a. All Mechanical Rooms
   b. All ductwork 24” wide and larger.
   c. Congested areas

B. Field Test Reports: Indicate and interpret test results for compliance with performance requirements.

C. Record Drawings: Indicate actual routing, fitting details, reinforcement, support, and installed accessories and devices.

1.7 CLOSEOUT SUBMITTALS

A. Operation and Maintenance Data: For air duct accessories to include in operation and maintenance manuals.

1.8 APPLICABLE PUBLICATIONS

A. The publications listed below form a part of this specification to the extent referenced. The publications are referenced in the text by the basic designation only.

B. ASHRAE Compliance: Applicable requirements in ASHRAE 62.1, Section 5 - "Systems and Equipment" and Section 7 - "Construction and System Start-up."

C. National Fire Protection Association (NFPA)

1. 90A: Standard for the Installation of Air Conditioning and Ventilating Systems
2. 96: Ventilation Control and Fire Protection of Commercial Cooking Operations

D. Sheet Metal and Air Conditioning Contractors National Association (SMACNA):

1. 3rd Edition: 2005 HVAC Duct Construction Standards, Metal and Flexible
2. 1st Edition: 2012 ANSI/SMACNA 016-2012 HVAC Air Duct Leakage Test Manual

1.9 DELIVERY, STORAGE, AND HANDLING

A. Deliver sealant and fire stopping materials to site in original unopened containers or bundles with labels indicating manufacturer, product name and designation, color, expiration period for use, pot life, curing time, and mixing instructions for multi-component materials.

B. Deliver, store and handle materials according to manufacturer's written recommendations.

C. All ductwork, equipment, and fittings delivered and stored on the job site must be capped to prevent the entry of moisture, construction dust or other debris.

PART 2 - PRODUCTS

2.1 SHEET METAL MATERIALS

A. General Material Requirements: Comply with SMACNA for acceptable materials, material thicknesses, and duct construction methods unless otherwise indicated. Sheet metal materials shall be free of pitting, seam marks, roller marks, stains, discolorations, and other imperfections.

B. Galvanized Sheet Steel: Comply with ASTM A 653/A 653M. Galvanized Coating Designation: G60 or G90 as indicated. Finishes for Surfaces Exposed to View: Mill phosphatized.

C. Carbon-Steel Sheets: Comply with ASTM A 1008/A-1008M, with oiled, matte finish for exposed ducts.

D. Stainless-Steel Sheets: Comply with ASTM A-480/A-480M, Type 304 or 316, as indicated in the "Duct Schedule" Article; cold rolled, annealed, sheet. Exposed surface finish shall be as indicated in the "Duct Schedule" Article.

E. Aluminum Sheets: Comply with ASTM B 209 Alloy 3003, H14 temper; with mill finish for concealed ducts, and standard, one-side bright finish for duct surfaces exposed to view.

F. Reinforcement Shapes and Plates: ASTM A-36/A-36M, steel plates, shapes, and bars; black and galvanized.

G. Tie Rods: Galvanized steel, 1/4-inch minimum diameter for lengths 36 inches or less; 3/8-inch minimum diameter for lengths longer than 36 inches.

2.2 SINGLE-WALL RECTANGULAR DUCTS AND FITTINGS

A. General Fabrication Requirements: Comply with SMACNA based on indicated static-pressure class unless otherwise indicated.

B. Transverse Joints: Select joint types and fabricate according to SMACNA Figure 2-1, "Rectangular Duct/Transverse Joints," for static-pressure class, applicable sealing requirements, materials involved, duct-support intervals, and other provisions in SMACNA.

C. Longitudinal Seams: Select seam types and fabricate according to SMACNA Figure 2-2, "Rectangular Duct/Longitudinal Seams," for static-pressure class, applicable sealing requirements, materials involved, duct-support intervals, and other provisions in SMACNA.

D. Cross Breaking or Cross Beading: Cross break or cross bead duct sides 19 inches and larger and 0.0359 inch thick or less, with more than 10 sq. ft. of un-braced panel area, unless ducts are lined. All large ducts must be braced as required to prevent drumming.

E. Elbows, Transitions, Offsets, Branch Connections, and Other Duct Construction: Select types and fabricate according to SMACNA Chapter 4, "Fittings and Other Construction," for static-pressure class, applicable sealing requirements, materials involved, duct-support intervals, and other provisions in SMACNA.

1. Fig. 2-3 Rectangular Elbows: Type RE2 square throat with vanes, Type RE1 radius (1.5W minimum), or Type RE5 dual radius. Square throat is not allowed.
2. Vane support in elbows: Fig 2-4. Turning vanes shall be double wall turning vanes fabricated from the same material as the duct. Mounting rails shall have friction insert tabs that align the vanes automatically. Tab spacing shall be as specified in Figure 2-3 of SMACNA Rail systems with non-standard tab spacing shall not be accepted. Due to tensile loading, vanes shall be capable of supporting 250 pounds when secured according to the manufacturer’s instructions.
3. Fig. 2-5 Rectangular Divided Flow Branches: Type 1, Type 2, Type 4A, or 4B.
4. Fig. 2-6 Branch Connections: 45-degree entry, 45-degree lead-in, bell-mouth or spin-in (single diffuser supply only).
5. Fig. 2-7 Offsets and Transitions. Use gradual offsets as shown, 90-degree offsets shall be avoided.
6. Fig 2-9 Duct Coils: Duct coils with transitions and upstream access door as shown.

2.3 ROUND DUCT FABRICATION

A. Fabricate supply ducts of galvanized steel according to SMACNA.

B. Longitudinal Seams: Select seam types and fabricate according to SMACNA Figure 3-2, "Round Duct Longitudinal Seams," for static-pressure class, applicable sealing requirements, materials involved, duct-support intervals, and other provisions in SMACNA.

1. Exposed Round Ducts: Shall be Spiral Seam (RL-1 seam) at 2-inch wg construction.
2. Concealed Round Ducts: Shall be longitudinal Grooved Seam Flat lock (RL-5 seam) at 2-inch wg construction.
3. Snap lock seams shall not be used for this project.

C. Transverse Joints: Select joint types and fabricate according to SMACNA Figure 3-1, "Round Duct Transverse Joints," for static-pressure class, applicable sealing requirements, materials involved, duct-support intervals, and other provisions in SMACNA.

2.4 HANGERS AND SUPPORTS

A. Hanger Rods: Cadmium-plated steel rods and nuts.

B. Hanger Rods for Outdoor Environments: Electrogalvanized, all-thread rods or galvanized rods with threads painted with zinc-chromate primer after installation.

C. Strap and Rod Sizes: Comply with SMACNA Table 5-1, "Rectangular Duct Hangers Minimum Size," and Table 5-2, "Minimum Hanger Sizes for Round Duct."

D. Steel Cables for Galvanized-Steel Ducts: Galvanized steel complying with ASTM A-603. Steel Cable End Connections: Cadmium-plated steel assemblies with brackets, swivel, and bolts designed for duct hanger service; with an automatic-locking and clamping device.

E. Duct Attachments: Sheet metal screws, blind rivets, or self-tapping metal screws; compatible with duct materials.

F. Trapeze and Riser Supports:

1. Supports for Galvanized-Steel Ducts: Galvanized-steel shapes and plates.
2. Supports for Stainless-Steel Ducts: Stainless-steel shapes and plates.
3. Supports for Aluminum Ducts: Aluminum or galvanized steel coated with zinc chromate.

G. Supports For Roof Mounted Items:

1. Equipment rails shall be galvanized steel, minimum 18-gauge, with integral baseplate, continuous welded corner seams, factory installed 2x4 treated wood nailer, 18-gauge galvanized steel counter flashing cap with screws, built-in cant-strip; minimum height 11 inches. Provide raised cant strip to start at the upper surface of the insulation.
2. Roof Duct Supports: Portable Pipe Hanger Model number PPH-D - Enclosed style.

    a. Engineered, portable system specifically designed for installation without the need for roof penetrations or flashings, and without causing damage to the roofing membrane.
    b. Hot dip galvanize in accordance with ASTM A 123 after fabrication.
    c. Factory fabricated to support exact duct sizes and equipment to be installed.
    d. Provide SS or galvanized clamps, bolts, nuts, washers, and other devices as required for a complete system.

2.5 SEALANT MATERIALS

A. Joint Sealant/Mastic: Shall be flexible, water-based, adhesive sealant designed for use in all pressure duct systems. After curing, it shall be resistant to ultraviolet light and shall prevent the entry of water, air and moisture into the duct system. Sealer shall be UL 723 listed; UL 181A-M or 181B-M listed; and meet NFPA 90A requirements. Pressure sensitive tape shall not be used as a sealing mechanism.

1. Maximum 5 flame spread and 0 smoke-developed (ASTM E-84 Tunnel Test).
2. Generally, provide liquid sealant for low clearance slip joints and heavy, permanently elastic, mastic type where clearances are larger.
3. Resistance to mold, mildew and water: Excellent
4. Color: Gray
5. Duct sealant/mastic shall meet requirements for LEED. ITW TACC Miracle Kingco water-based sealants, or approved equal.

B. Flange Gaskets: Butyl rubber, neoprene, or EPDM polymer with polyisobutylene plasticizer.

C. Round Duct Joint O-Ring Seals: Seal shall provide maximum leakage class of 3 cfm/100 sq. ft. at 1-inch w.g. and shall be rated for 10-inch w.g. static-pressure class, positive or negative. Double-lipped, EPDM O-ring seal, mechanically fastened to factory-fabricated couplings and fitting spigots.

2.6 FITTINGS

A. Tees, Laterals, and Conical Tees: Use 45 degree; fabricate to comply with SMACNA with metal thicknesses specified for longitudinal seam straight duct.

B. Diverging-Flow Fittings: Fabricate with a reduced entrance to branch taps with no excess material projecting from body onto branch tap entrance.

C. Elbows: Diameters 3 through 8 inches shall be two-section die stamped; all others shall be gored construction, maximum 18 degree angle, with all seams continuously welded or standing seam. Coat galvanized areas of fittings damaged by welding with corrosion resistant aluminum paint or galvanized repair compound.

D. Low-point drains: Ductmate moisture drain with funnel collection design; ¾” connection with drain fitting and cap.

2.7 DUCT-MOUNTED ACCESS DOORS

A. Manufacturers: Subject to compliance with requirements, provide products by one of the following:

1. Ductmate Industries, Inc.
2. Greenheck Fan Corporation.
3. McGill Air Flow LLC.
4. Nailor Industries Inc.
5. Durodyne
6. Cesco
7. Buckley

B. Duct-Mounted Access Doors: Fabricate access panels according to SMACNA; Figures 2-10, "Duct Access Doors and Panels," and 2-11, "Access Panels - Round Duct."

1. Door: Double wall, rated for up to 4.5” static pressure. Door panel filled with 1" fiberglass insulation; ¾ lb. density. Hinges and Latches: 1-by-1-inch continuous piano hinge and cam latches. Fabricate doors airtight and suitable for duct pressure class.
2. Frame: Galvanized sheet steel, with bend-over tabs.
3. Provide 1/8” thick neoprene gaskets.
4. Locks: Access doors less than 12 sq. inches: One cam lock. Doors over 12 sq. inches shall have two locks.

2.8 FLEXIBLE CONNECTORS

A. Provide for all air moving equipment. General: Flame-retarded or noncombustible fabrics, coatings, and adhesives complying with NFPA 90A. Factory fabricated with a strip of fabric 3-1/2 inches wide attached to two strips of 2-3/4-inch-wide, 0.028-inch-thick, galvanized, sheet steel or 0.032-inch aluminum sheets. Select metal compatible with connected ducts. Duro-Dyne, Ductmate, Hardcast, or approved equal.

B. Indoor Flexible Connector Fabric: Glass fabric double coated with polychloroprene or neoprene. Minimum Weight: 26 oz. /sq. yd. Tensile Strength: 480 lbf/inch in the warp, and 360 lbf/inch in the filling.

2.9 FLEXIBLE DUCTS

A. General: Comply with UL 181, Class 0 0r 1. Flame Spread: Less than 25; Smoke Developed: Less than 50.

B. All products shall be certified by Greenguard Environmental Institute; independent testing of products for emissions of respirable particles and Volatile Organic Compounds (VOC’s), including formaldehyde and other specific product-related pollutants. Greenguard provides independent, third-party certification of IAQ performance. Certification is based upon criteria used by EPA, OSHA and WHO.

C. Rated Positive Pressure: 10" w.g. per UL-181. Maximum negative pressure: ¾”.

D. Flexible Ducts, Insulated: Factory-fabricated, insulated, round duct, with an outer jacket enclosing glass-fiber insulation around a continuous inner liner.

1. R6 insulation, Basis of Design: Atco #86
2. Reinforcement: Steel-wire helix encapsulated in inner liner.
3. Jacket (inner and outer): Polyethylene film.

E. Exhaust/Return Flexible Ducts, not insulated: Atco#50 Factory-fabricated, round duct. Reinforcement: Triple lamination of tough metallized polyester, aluminum foil and polyester encapsulates a steel wire helix. Rated for ¾” w.g. negative pressure.

F. Flexible Duct Clamps: Stainless-steel band with cadmium-plated hex screw to tighten band with a worm-gear action, in sizes 3 to 18 inches to suit duct size.

G. Hangers shall be band type, 1” wide minimum.

2.10 MANUAL-VOLUME DAMPERS

A. Manual balancing dampers meeting the following specifications shall be furnished and installed on all branch ducts and where shown on plans. Testing and ratings to be in accordance with AMCA Standard 500-D.

B. Single-Blade Rectangular Dampers shall consist of: an 18 ga. galvanized steel frame with 3-1/2 in. depth; blades fabricated from 20 ga. galvanized steel; integral 1/2 in. diameter axles. Damper suitable for pressures to 1.0 in. wg, velocities to 2000 fpm and temperatures to 180°F. Basis of design is Greenheck model MBD-10.

C. Multi-Blade Rectangular Dampers shall consist of: a 16 ga. galvanized steel hat channel frame with 5 in. depth; triple V type blades fabricated from 16 ga. galvanized steel; ½ in. dia. plated steel axles; external (out of the airstream) blade-to-blade linkage. Damper suitable for pressures to 4.0 in. w.g. (996 Pa), velocities to 2000 fpm and temperatures to 180°F. Basis of design is Greenheck model MBD15.

D. Round dampers shall consist of: a 20 ga. galvanized steel frame with 6 in. depth; blades fabricated from 20 ga. galvanized steel; 3/8 in. square plated steel axles turning in acetal bearings. Damper suitable for pressures to 1.0 in. wg, velocities to 2000 fpm and temperatures to 180°F. Basis of design is Greenheck model MBDR50.

2.11 BACKDRAFT DAMPERS

A. Gravity: Ruskin BD2/A2.

1. Frame: 0.090-inch-thick extruded aluminum, with mounting flange.
2. Blades: 0.025-inch-thick, roll-formed aluminum, with extruded-vinyl seals, Zytel bearings.
3. Tie Bars and Brackets: Aluminum.
4. Return Spring: Adjustable tension.

B. Counter Balanced: Ruskin CBD2; weather resistant for relief air applications; Adjustable counterbalance weights which enable the damper to operate in the range of .01" to .05" w.g.

1. Frame: 2 inches x minimum 0.090 inch6063-T6 extruded aluminum channel and mitered corners. No flanges.
2. Front Flange Frame: 2 inches x minimum 0.090 inch 6063-T6 extruded aluminum channel with front flange and mitered corners.
3. Rear Flange Frame: 2 inches x minimum 0.090 inch 6063-T6 extruded aluminum channel with rear flange and mitered corners.
4. Blades:

   a. Style: Single-piece, overlap frame.
   b. Action: Parallel.
   c. Orientation: Horizontal.
   d. Material: Minimum 0.025 inch (0.6 mm) 6063-T6 roll formed aluminum.
   e. Width: Maximum 6 inches (152 mm).

f. Counterbalance weights are zinc plated steel weights attached to blades. Adjustable for final, on the job, settings.
g. Bearings: Corrosion-resistant, long-life, synthetic, formed as single piece with axles.

5. Linkage: Concealed in frame.
6. Axles: Corrosion-resistant, long-life, synthetic, locked to blade and formed as single piece with bearings.
7. Finish: Mill aluminum.
8. Performance Data:

a. Temperature Rating: Withstand -40 to 200 degrees F.
b. Capacity: Withstand HVAC system operating conditions.
c. Closed Position: Maximum back pressure of 4.5 inches w.g.
d. Open Position: Maximum air velocity of 1,000 feet per minute.
e. Operation of Blades:

1) Start to Open: 0.01 inch w.g. (0.002 kPa).
2) Fully Open: 0.06 inch w.g. (0.015 kPa).
3) Pressure Drop: Maximum 0.04 inch w.g. (0.01 kPa) at 1,000 feet per minute (305 m/min) through 24 inch x 24 inch (610 x 610 mm) damper.

C. Counter Balanced: Ruskin CBD4; weather resistant for relief air applications; Adjustable counterbalance weights which enable the damper to operate in the range of .01" to .05" w.g.

1. Frame: 0.081”-inch-thick 6063-T5 extruded aluminum, with mounting flange.
2. Blades: 0.070-inch-thick, roll-formed 6063-T5 aluminum, with extruded-vinyl seals, Zytel bearings.
3. Tie Bars and Brackets: Aluminum.

PART 3 - EXECUTION

3.1 DUCT INSTALLATION, GENERAL

A. Drawings show the general layout of ductwork and accessories but do not show all required fittings and offsets that may be necessary to connect ducts to equipment, diffusers, grilles, etc., and to coordinate with other trades. Fabricate ductwork based on field measurements. Provide all necessary fittings and offsets at no additional cost. Coordinate with other trades for space available and relative location of HVAC equipment and accessories on ceiling grid. Duct sizes on the drawings are inside dimensions which shall be altered by Contractor to other dimensions with the same air handling characteristics where necessary to avoid interferences and clearance difficulties.

B. Provide volume dampers at all branch ducts to RGD’s. If volume dampers are inadvertently not shown, contractor shall provide, the intent is to provide volume dampers at all branches.

C. Provide ducts and accessories according to SMACNA unless otherwise indicated.

D. Construct and install each duct system for the specific duct pressure classification indicated.

E. Properly seam, brace, stiffen, support and render ducts mechanically airtight. Adjust ducts to suit job conditions. Dimensions may be changed as approved, if cross sectional area is maintained.

F. Provide ducts in lengths not less than 12 feet, unless interrupted by fittings. Provide ducts with fewest possible joints.

G. Provide fabricated fittings for changes in directions, changes in size and shape, and connections.

H. Provide couplings tight to duct wall surface with a minimum of projections into duct.

I. Provide ductwork to allow maximum headroom. Provide ducts, unless otherwise indicated, vertically and horizontally, parallel and perpendicular to building lines; avoid diagonal runs. Provide ducts close to walls, overhead construction, columns, and other structural and permanent enclosure elements of building.

J. Provide ducts with a clearance of 1 inch, plus allowance for insulation thickness.

K. Conceal ducts from view in finished spaces. Do not encase horizontal runs in solid partitions, unless specifically indicated.

L. Coordinate layout with suspended ceiling, lighting layouts, and similar finished work.

M. Electrical Equipment Spaces: Route ductwork to avoid passing through transformer vaults and electrical equipment spaces and enclosures.

N. Exterior ductwork shall have a pitch of at least 3 degrees on the top, to allow water runoff, prevent ice buildup.

3.2 INSTALLATION OF EXPOSED DUCTWORK

A. Protect ducts exposed in finished spaces from being dented, scratched, or damaged.

B. Hangers Exposed to View: Threaded rod and angle or channel supports.

C. Trim duct sealants flush with metal. Create a smooth and uniform exposed bead. Do not use two-part tape sealing system. Seal duct joints to prevent dirt marks.

D. Grind welds to provide smooth surface free of burrs, sharp edges, and weld splatter. When welding stainless steel with a No. 3 or 4 finish, grind the welds flush, polish the exposed welds, and treat the welds to remove discoloration caused by welding.

E. Maintain consistency, symmetry, and uniformity in the arrangement and fabrication of fittings, hangers and supports, duct accessories, and air outlets.

F. Repair or replace damaged sections and finished work that does not comply with these requirements.

3.3 MATERIALS

A. Hangers, accessories, and dampers shall be same material as parent duct.

B. All ducts shall be G60 galvanized steel except as follows:

1. Exposed Ductwork: Galvaneal (ready for paint)

3.4 DUCT CLASSIFICATIONS AND SEALING

A. Static-Pressure Classifications: Unless otherwise indicated, construct ducts to the following:

1. Supply duct upstream of VAV terminal units: 3 in. w.g.
2. Supply Ducts downstream of VAV terminal units: 2-inch w.g.
3. Return Ducts: 2-inch w.g, negative pressure.
4. Exhaust Ducts: 2-inch w.g, negative pressure.
5. Rooftop air handlers and RTU's: The first 20 feet of ductwork (supply and return) shall be fabricated and installed in a stiff and rigid manner, with cross bracing for minimal "drumming"; minimum 6-inch pressure class.

B. Seam And Joint Sealing

1. General: Seal duct seams and joints according to the duct pressure class indicated and as described in SMACNA.
2. Seal to SMACNA Class A; <u>all</u> joints, longitudinal and transverse seams, and connections in ductwork shall be securely fastened and sealed with welds, gaskets, or duct sealant. Exceptions:

   a. Continuously welded and locking-type longitudinal joints and seams on ducts operating at less than 2 in. wg pressure classification.
   b. Exposed exhaust or return ducts operating at less than 2 in. wg pressure classification.
   c. Exposed supply ducts in the space that the duct serves.

3. Seal externally insulated ducts before insulation installation.

3.5 DUCT PENETRATIONS

A. Fire or Smoke Rated Penetrations not requiring a fire and/or smoke damper: Where ducts pass through walls, floors, or partitions that are required to have a fire resistance rating and fire dampers are not required, the opening in the construction around the duct shall be provided in accordance with the UL listing of the penetration. Provide firestopping per Section 23 05 00.

B. Fire or Smoke Rated Penetrations: Provide fire and/or smoke damper.

C. Non-Fire-Rated Exposed Penetrations: Where ducts pass through interior partitions and exterior walls, and are exposed to view, conceal space between construction opening and duct or duct insulation with sheet metal flanges of same metal thickness as duct. Overlap opening on four sides by at least 1-1/2 inches.

D. Non-Fire-Rated Concealed Penetrations: Provide insulation infill and acoustical sealant around gaps. Tightly seal to prevent sound transmission. Neatly finish.

E. Mechanical room floor penetrations: Provide 4-inch high concrete curbs or other sealing method to prevent leakage from mechanical room into floor penetration.

F. Roof penetrations by ducts shall use counter-flashed curbs.

G. Flexible air ducts or connectors shall not pass through any wall, floor, or ceiling.

3.6 HANGER AND SUPPORT INSTALLATION

A. Comply with SMACNA Chapter 5, "Hangers and Supports."

B. Building Attachments: Comply with SMACNA Chapter 5, "Hangers and Supports". Concrete inserts, powder-actuated fasteners, or structural-steel fasteners appropriate for construction materials to which hangers are being attached.

C. Hanger Spacing: Comply with SMACNA Table 5-1, "Rectangular Duct Hangers Minimum Size," and Table 5-2, "Minimum Hanger Sizes for Round Duct," for maximum hanger spacing; install hangers and supports within 24 inches of each elbow and within 48 inches of each branch intersection.

D. Support vertical ducts with steel angles or channel secured to the sides of the duct with welds, bolts, sheet metal screws, or blind rivets; support at each floor and at a maximum intervals of 16 feet.

E. Provide upper attachments to structures. Select and size upper attachments with pull-out, tension,

3.7 FLEXIBLE DUCT

A. Provide in accordance with manufacturer’s and SMACNA recommendations.

B. Flexible ducts hall be supported at manufacturer’s recommended intervals, but at no greater distance than 5 feet. Maximum permissible sag is ½” per foot of spacing between supports.

C. Provide duct fully extended; do not install in the compressed state or use excess lengths.

D. Avoid bending ducts across sharp corners or incidental contact with metal fixtures, pipes, conduits, or hot equipment.

E. Bends shall be made with not less than 1 duct diameter centerline radius. Ducts shall extend a few inches beyond the end of a sheet metal connection before bending.

F. Hanger or saddle material in contact with the duct shall be at least 1” wide.

G. Provide at least 2 duct diameters of straight duct at the entrance to register, grilles, and diffusers.

3.8 DUCT ACCESSORIES INSTALLATION

A. Provide duct accessories according to applicable details shown in SMACNA.

B. Provide duct transitions, offsets and connections to dampers, coils, and other equipment in accordance with SMACNA Standards

C. Each register, grille, or diffuser shall have a means of air flow adjustment. Provide volume damper in branch duct if not furnished with the RGD.

D. Adjust operable devices for proper action.

E. Manual dampers shall be visible outside the insulation and marked with a 12" orange ribbon.

F. Locate each duct smoke detector in a serviceable location, in accordance with its listing.

G. Perform the following as directed by the controls contractor: Installation of control devices. Access doors where indicated and as required.

H. Provide duct access panels for access components that require servicing.

1. Provide duct access panels to allow access to interior of ducts for cleaning, inspecting, adjusting, and maintaining per equipment manufacturers' requirements.
2. Provide access panels on side of duct where adequate clearance is available.
3. Locate panel upstream and/or downstream as recommended by manufacturer.
4. Locations:

    a. Upstream side of duct coils.
    b. At outdoor-air intakes.
    c. Adjacent to and close enough to life safety dampers, to reset or reinstall fusible links.
    d. Control devices requiring inspection.
    e. Elsewhere as indicated or required by duct accessory manufacturer

5. Inspect locations of access doors and verify that purpose of access door can be performed.

I. Control Damper Installation

1. Damper submittals shall be coordinated for type, quantity, and size to ensure compatibility with sheet metal design.
2. Duct openings shall be free of any obstruction or irregularities that might interfere with blade or linkage rotation or actuator mounting. Duct openings shall measure ¼ in. larger than damper dimensions and shall be square, straight, and level.
3. Individual damper sections, as well as entire multiple section assemblies, must be completely square and free from racking, twisting, or bending. Measure diagonally from upper corners to opposite lower corners of each damper section. Both dimensions must be within 1/8 in. of each other.
4. Follow the manufacturer's instructions for field installation of control dampers. Unless specifically designed for vertical blade application, dampers must be mounted with blade axis horizontal.

5. Damper blades, axles, and linkage must operate without binding. Before system operation, cycle damper after installation to ensure proper operation. On multiple section assemblies, all sections must open and close simultaneously.
6. Provide a visible and accessible indication of damper position on the drive shaft end.
7. Support ductwork in area of damper when required to prevent sagging due to damper weight.
8. After installation of low-leakage dampers with seals, caulk between frame and duct opening to prevent leakage around perimeter of damper.

3.9 FIELD QUALITY CONTROL

A. Protect duct interiors from moisture, construction debris and dust, and other foreign materials. Comply with SMACNA's "IAQ Guidelines for Occupied Buildings Under Construction," Appendix G, "Duct Cleanliness for New Construction Guidelines."

B. HVAC systems shall not be operated during construction.

C. Systems shall not be operated without filters in place.

D. Upon completion of installation duct systems and before HVAC system start-up, visually inspect the ductwork proper installation

E. Cover supply openings with filter media prior to system start-up to catch any loose material that may remain inside the ductwork. Turn the HVAC system on and allow it to run until steady state operation is reached. Remove the temporary filter media from supply openings and, along with it, any loose material blown downstream and caught by the filter media.

F. All ductwork shall be provided with temporary enclosures to keep the HVAC system free of dust and construction debris. The HVAC system includes any interior surface of the facility’s air distribution system for conditioned spaces and/or occupied zones. This includes the entire duct from the points where the air enters the system to the points where the air is discharged from the system.

G. Check all filters in accordance with their manufacturer's instructions. Use specified grade of filters at all times that system is operating.

H. Leakage Tests (required for ducts designed to operate at static pressures >3” WG:

1. Comply with SMACNA's "HVAC Air Duct Leakage Test Manual."
2. Ducts shall meet a rate of air leakage (CL) less than or equal to 4.0 as determined by the following equation: CL = F/P0.65

   a. F = the measured leakage rate in CFM per 100 square feet of duct surface.
   b. P = the static pressure of the test.

3. Disassemble, reassemble, and seal segments of systems to accommodate leakage testing and for compliance with test requirements.
4. Test for leaks before applying external insulation.

5. Conduct tests at static pressures equal to maximum design pressure of system or section being tested. If static-pressure classes are not indicated, test system at maximum system design pressure. Do not pressurize systems above maximum design operating pressure.
6. Give seven days' advance notice for testing.
7. Submit a test report for each test. Documentation shall be provided demonstrating that representative sections totaling at least 25% of the duct area have been tested and that all tested sections comply
8. Give seven days' advance notice for testing.
9. Duct system will be considered defective if it does not pass tests and inspections.

3.10 DUCT SEALING

A. Duct Preparation

1. Inspect air distribution systems for major leakage sites and significant accumulation of hubris or debris
2. Remove all debris and significant dust and dirt (>1/8 inch deep) in air distribution system using a NADCA approved duct cleaning method
3. Ensure adequate structural support for new and existing ductwork, including structural integrity of all mechanical duct joints and transitions per SMACNA standards.
4. Temporarily remove or protect from aerosol particles building controls, fire and smoke sensors as recommended by manufacturer.
5. Temporarily disable fire alarms and notify appropriate authorities.
6. Temporarily isolate air-moving equipment and block off air inlets and outlets, and other devices and appurtenances as recommended by the manufacturer.
7. Protect occupied spaces from aerosol particles using manufacturer procedures.
8. All work shall be done in a substantial and workmanlike manner by factory trained technicians.

B. Duct Sealing

1. Repair all major leakage sites greater than ½ inch across using mastic and fiberglass mesh tape per SMACNA standards

    a. Mastic and fiberglass mesh tape shall meet UL 181 standards.

2. Seal existing ductwork from the inside using automated aerosolized sealant injection.

    a. Manufacturer: Aeroseal, LLC
    b. Application must be performed by a manufacturer approved service provider
    c. Sealant shall comply with UL Outline Scope 1381
    d. Sealant must cure with 2 hours with no VOC off-gassing thereafter
    e. Sealant shall remain elastic after curing
    f. Sealant shall be deposited substantially at areas of leakage only

3. Provide pre-sealing, post-sealing and sealing profile reports for all duct sections sealed.
4. Repair all injection and test holes in existing ductwork using patching plates sealed tight per SMACNA standards.
5. Any injection ports in duct board shall be made and repaired using pumpkin-cuts
6. Any insulation (internal or external) shall be replaced on the patching plate.

C. Duct Testing

1. Following completion of air handling unit installations, duct repairs, and duct sealing, test all ductwork to insure that the air distribution system is properly sealed.

   a. The supply ducts shall have air losses equal to or less than the Leakage Class indicated in Table 1.
   b. The return ducts shall have air losses equal to or less than the Leakage Class indicated in Table 1.X
   c. The exhaust ducts shall have air losses equal to or less than the Leakage Class indicated in Table 1.

D. The SMACNA Leakage Class (C_L) is determined using the following relationship:

$$C_L = F/p^{0.65}$$

Where:
C_L = Leakage Class, which is the *permissible leakage rate* in CFM per 100ft^2 of duct surface
F = Leakage Factor, CFM per 100ft^2 of duct surface. Varies with s.p.; p = Duct static pressure, in. w.g.

Duct Static Pressure Construction Class	1/2 in., 1 in. 2 in. w.g.	3 in. w.g.	4 in., 6 in., 10 in. w.g.
Seal Class	A*	A*	A*
Sealing Applicable	Transverse Joints, Seams, and all Applicable Duct Wall Penetrations	Transverse Joints, Seams, and all Applicable Duct Wall Penetrations	Transverse Joints, Seams, and all Applicable Duct Wall Penetrations
Leakage Class			
Rectangular Metal	16	8	4
Round Metal	8	4	2
Flexible Ducts	8	N/A	N/A
Ductboard	8	N/A	N/A
Masonry	8	N/A	N/A
*Aeroseal since it is applied to ductwork internally under pressure achieves Seal Class A			
Leak location is not relevant			

E. Duct Reassembly and Cleanup

1. Reinstall building controls and smoke detectors.
2. Enable fire alarms and notify appropriate authorities.
3. Remove blocking, reinstall grills and registers, and enable air handling fans.
4. Cleanup sealant residue that may have adhered to surfaces in occupied areas as recommended by the Manufacturer.
5. All work shall be done in a substantial and workmanlike manner by factory-trained technicians.

F. Warranty: The Contractor shall warrant that the aerosol sealant application will be free from defects for a period of 3 years from date of the sealing application. If defects should occur during this period, the Contractor shall repair or replace the defective duct seals, including the direct labor costs for performing the repair or replacement, at no additional cost to the Owner.

END OF SECTION

SECTION 23 36 00 - AIR TERMINAL UNITS

PART 1 - GENERAL

1.1 RELATED DOCUMENTS

A. Drawings and general provisions of the Contract, including General and Supplementary Conditions and Division 1 Specification Sections, apply to this Section.

B. Related Sections include the following:

1. Division 23 Section "Common Work Results"
2. Division 23 Controls Section for control devices installed on air terminals.

1.2 SUMMARY

A. This Section includes single-duct air terminals.

1.3 ACTION SUBMITTALS

A. Product Data: For each type of air terminal unit.

1. Include construction details, material descriptions, dimensions of individual components and profiles, and finishes for air terminal units.
2. Include rated capacities, operating characteristics, electrical characteristics, and furnished specialties and accessories.
3. Documentation indicating that units comply with ASHRAE 62.1, Section 5 - "Systems and Equipment."
4. For adhesives and sealants, documentation including printed statement of VOC content.

1.4 CLOSEOUT SUBMITTALS

A. Operation and Maintenance Data: For air terminal units to include in emergency, operation, and maintenance manuals.

1.5 QUALITY ASSURANCE

A. Product Options: Drawings and schedules indicate requirements of air terminals and are based on specific systems indicated. Other manufacturers' systems with equal performance characteristics may be considered. Refer to Division 1 Section "Substitutions."

B. Listing and Labeling: Provide electrically operated air terminals specified in this Section that are listed and labeled. The Terms "Listed" and "Labeled": As defined in NFPA 70, Article 100. Listing and Labeling Agency Qualifications: A "Nationally Recognized Testing Laboratory" as defined in OSHA Regulation 1910.7.

C. Testing Requirements: Test and rate air terminals according to ARI 880, "Industry Standard for Air Terminals."

D. Identification: Label each air terminal with plan number, nominal airflow, maximum and minimum factory-set airflows, coil type, and ARI certification seal.

E. NFPA Compliance: Provide air terminals according to NFPA 90A, "Standard for the Installation of Air Conditioning and Ventilating Systems."

F. Comply with NFPA 70 for electrical components and installation.

G. ASHRAE Compliance: Applicable requirements in ASHRAE 62.1.

PART 2 - PRODUCTS

2.1 MANUFACTURERS

A. Manufacturers: Subject to compliance with requirements, provide air terminals by one of the following:

1. Trane
2. Titus
3. Environmental Technologies.
4. Price
5. Metal Aire
6. Krueger

2.2 SINGLE-DUCT AIR TERMINALS

A. The unit casing shall be comprised of 22 gauge galvanized steel. Outlet connection shall be slip and drive. Basis of Design: Trane VariTrane Single-Duct VCCF – Cooling Only or Trane VCWF – With Hot Water Coil.

B. Terminal units shall be ARI 880 - 98 certified and UL Listed.

C. Casings: 22 gauge galvanized steel. Maximum casing leakage: 1.5 cfm at 1-inch w.g. inlet static pressure, certified ultra-low air leakage.

D. 1" Double-wall Insulation—Interior surface of unit casing is acoustically and thermally lined with a 1-inch, 1.0 lb./ft3 composite density glass fiber with high-density facing. Insulation R-value is 3.85. Insulation is UL listed and meets NFPA-90A and UL 181 standards. Insulation is covered by interior liner made of 26-gage galvanized steel. All wire penetrations are covered by grommets. There are no exposed edges of insulation (complete metal encapsulation).

E. The air inlet connection shall be an 18 gauge galvanized steel cylinder sized to fit standard round duct. A multiple point, averaging flow sensing ring shall be provided with balancing taps for measuring within +/- 5% of unit cataloged airflow. Airflow versus pressure differential calibration chart shall be provided. The damper blade shall be constructed of a closed cell foam

seal mechanically locked between two 22 gauge galvanized steel disks. The damper blade assembly shall be connected to a cast zinc shaft supported by self lubricating bearings. The shaft shall be cast with a damper position indicator. The valve assembly shall include a mechanical stop to prevent over stroking. At 4.0" w.g. air valve leakage shall not exceed 1% of cataloged airflow.

F. Hot Water Coil: Factory mounted on outlet. Provide full fin collars provided for accurate fin spacing and maximum fin-tube contact. The seamless copper tubes shall be mechanically expanded into the fin collars. Coils shall be proof tested at 450-psi and leak tested at 300-psi air pressure under water. Coil connections shall be sweat with left hand or right hand coil connections as per field constraints.

G. Heating coils shall be provided with an access for cleaning. Provide access panels large enough for inspection, adjustment, and maintenance without disconnecting ducts, and for cleaning heating coils attached to unit Panels shall be insulated to same standards as the rest of the casing and shall be secured and gasketed airtight. It shall require no tool other than a screwdriver to remove.

H. Controls: The terminals will have pressure independent direct digital controls supplied and mounted by the control contractor. Terminals shall be furnished with a pneumatic inlet velocity sensor. The sensor shall be multi-point center averaging type, with a minimum of four measuring ports parallel to the take-off point from the sensor. Sensors with measuring ports in series are not acceptable. The sensor must provide a minimum differential pressure signal of 0.03" wg at an inlet velocity of 500 fpm. Flow measuring taps and flow curves shall be supplied with each terminal for field balancing airflow. All pneumatic tubing shall be UL listed fire retardant (FR) type.

I. Each terminal shall be equipped with labeling showing unit location, size, and scheduled cfm.

PART 3 - EXECUTION

3.1 INSTALLATION

A. Provide air terminals level and plumb, according to manufacturer's written instructions, rough-in drawings, original design, and referenced standards.

B. Allow adequate clearance to meet NEC on control box side of unit to meet NEC.

C. Support in accordance with SMACNA and manufacturer recommendations.

D. Connect ductwork to air terminals according to Division 23 ductwork Sections. Slip each inlet duct over the inlet collar of the terminal. Fasten and seal the connection airtight. The diameter of the inlet duct must be equal to the listed size of the terminal.

E. Inlet and outlet duct must be installed in accordance with SMACNA guidelines. Locate air terminal units to provide a straight section of inlet duct for proper functioning of volume controls. Provide a minimum of 2.5 equivalent duct diameters of straight duct at the inlet.

3.2 CONNECTIONS

A. Provide piping adjacent to air terminals to allow service and maintenance.

B. Hot-Water Piping: In addition to requirements in Division 23 Section "Hydronic Piping," connect heating coils to supply with shutoff valve, strainer, and union; and to return with control valve, balancing valve and union.

C. Electrical: Comply with applicable requirements in Division 26 Sections. Ground equipment. Tighten electrical connectors and terminals according to manufacturer's published torque-tightening values. Where manufacturer's torque values are not indicated, use those specified in UL 486A and UL 486B.

3.3 FIELD QUALITY CONTROL

A. Perform the following tests and inspections:

1. After installing air terminal units and after electrical circuitry has been energized, test for compliance with requirements.
2. Leak Test: After installation, fill water coils and test for leaks. Repair leaks and retest until no leaks exist.
3. Operational Test: After electrical circuitry has been energized, start units to confirm proper motor rotation and unit operation.
4. Test and adjust controls and safeties. Replace damaged and malfunctioning controls and equipment.

B. Air terminal unit will be considered defective if it does not pass tests and inspections.

C. Prepare test and inspection reports.

3.4 STARTUP SERVICE

A. Perform startup service.

1. Complete installation and startup checks according to manufacturer's written instructions.
2. Verify that inlet duct connections are as recommended by air terminal unit manufacturer to achieve proper performance.
3. Verify that controls and control enclosure are accessible.
4. Verify that control connections are complete.
5. Verify that nameplate and identification tag are visible.
6. Verify that controls respond to inputs as specified.

3.5 CLEANING

A. After completing system installation, including outlet fittings and devices, inspect exposed finish. Remove burrs, dirt, and construction debris, and repair damaged finishes.

END OF SECTION

SECTION 23 37 13 - DIFFUSERS, REGISTERS, AND GRILLES

PART 1 - GENERAL

1.1 RELATED DOCUMENTS

A. Drawings and general provisions of the Contract, including General and Supplementary Conditions and Division 1 Specification Sections, apply to this Section.

B. Related Sections include the following:

1. Division 23 Section "Common Work Results"
2. Division 23 Section "Ductwork"
3. Division 23 Section "Testing, Adjusting, and Balancing"

1.2 SUMMARY

A. This Section includes ceiling- and wall-mounted diffusers, registers, and grilles.

1.3 DEFINITIONS

A. Diffuser: Circular, square, or rectangular air distribution outlet, generally located in the ceiling and comprised of deflecting members discharging supply air in various directions and planes and arranged to promote mixing of primary air with secondary room air.

B. Grille: A louvered or perforated covering for an opening in an air passage, which can be located in a sidewall, ceiling, or floor.

C. Register: A combination grille and damper.

1.4 SUBMITTALS

A. Each manufacturer shall check noise level ratings for registers and diffusers to insure that the sizes selected will not produce noise to exceed 30 db, "A" scale, measured at occupant level; notify Owner’s representative of problems prior to shop drawing submittal.

B. Pressure drop, airflow and noise criteria selection is based on design equipment. Manufacturers not submitting design makes must provide written certification in front of submittal that equipment submitted has been checked against and performs equal to the design make.

C. Product Data: For each model indicated, include the following:

1. Data Sheet: For each type of air outlet and inlet, and accessory furnished; indicate construction, finish, and mounting details.
2. Performance Data: Include throw and drop, static-pressure drop, and noise ratings for each type of air outlet and inlet.

3. Schedule of diffusers, registers, and grilles indicating drawing designation, room location, quantity, model number, size, and accessories furnished.
4. Assembly Drawing: For each type of air outlet and inlet; indicate materials and methods of assembly of components.

D. Coordinate locations with reflected ceiling plans and wall elevations as applicable.

E. Coordinate mounting frame with associated mounting surface.

1.5 QUALITY ASSURANCE

A. Product Options: Drawings and schedules indicate specific requirements of diffusers, registers, and grilles and are based on the specific requirements of the systems indicated. Other manufacturers' products with equal performance characteristics may be considered. Refer to Division 1 Section "Substitutions."

B. NFPA Compliance: Install diffusers, registers, and grilles according to NFPA 90A, "Standard for the Installation of Air-Conditioning and Ventilating Systems."

C. Sound pressure levels shall be determined by using AHRI Standard 885-2008 “Procedure for Estimating Occupied Space Sound Levels in the Application of Air Terminals and Outlets”.

PART 2 - PRODUCTS

2.1 GENERAL

A. Diffusers, registers, and grilles are scheduled on Drawings.

B. Border and mounting type shall match the mounting surface. Coordinate with mounting conditions.

C. Material shall match the specified ductwork. Coordinate with Section 23 31 13 “Ductwork”.

D. Testing: Test performance according to ASHRAE 70, "Method of Testing for Rating the Performance of Air Outlets and Inlets."

E. Provide with a White Powder Coat finish, unless noted otherwise.

F. Grille blade orientation: Vertical rectangle (wall grille with height longer than width): The blades shall run parallel to the short dimension of the grille. Horizontal rectangle: The blades shall run parallel to the long dimension of the grille.

G. Manufacturers

1. Price
2. Titus
3. Metal-Aire
4. Anemostat
5. Nailor

2.2 RETURN OR EXHAUST

A. Return/Exhaust Grille, 45-degree deflection

1. Material: steel (Price 530 Series) or aluminum (Price 630 Series)
2. Provide damper as scheduled.
3. Grilles shall be 45 degree deflection fixed louver type with blades spaced 3/4" on center.

2.3 SUPPLY

A. Double-deflection Supply Register

1. Material: steel (Price 520D Series) or aluminum (Price 620D Series)
2. Registers shall be double deflection type with two sets of fully adjustable deflection blades spaced ¾” on center.
3. The integral volume control damper shall be of the opposed blade type. Material shall match the register material. The damper shall be operable from the register face.

B. Square ceiling diffusers, Adjustable pattern

1. Material: steel (Price Model SCDA) or aluminum (Price Model ASCDA)
2. Diffusers shall consist of a precision formed back cone of one piece seamless construction which incorporates a round inlet collar of sufficient length for connecting rigid or flexible duct.
3. The diffuser shall integrate with all duct sizes shown on the plans without affecting the face size and appearance of the unit. An inner cone assembly shall consist of 3 cones (or optional 4 cones) which drop below the ceiling plane to assure optimal VAV air diffusion performance.
4. The inner cone assembly shall be completely removable from the diffuser face to allow full access to any dampers or other ductwork components located near the diffuser neck.
5. Non-protrusive airflow directional tabs shall be provided on the back of the inner cones which may be positioned for either horizontal or vertical discharge.

PART 3 - EXECUTION

3.1 EXAMINATION

A. Examine areas where diffusers, registers, and grilles are to be installed for compliance with requirements for installation tolerances and other conditions affecting performance of equipment. Do not proceed with installation until unsatisfactory conditions have been corrected.

3.2 INSTALLATION

A. Install diffusers, registers, and grilles level and plumb, according to manufacturer's written instructions, Coordination Drawings, original design, and referenced standards.

B. Drawings indicate general arrangement of ducts, fittings, and accessories. Make final locations where indicated, as much as practicable.
   1. For units installed in lay-in ceiling panels, locate units in the center of the panel.
   2. Where architectural features or other items conflict with installation, notify Architect for a determination of final location.

C. Provide diffusers, registers, and grilles with airtight connection to ducts.

D. Provide 18” minimum of vertical straight ductwork at the entrance to ceiling diffusers.

E. Plenum boxes on grilles/registers shall be 8” minimum height.

3.3 ADJUSTING

A. After installation, adjust diffusers, registers, and grilles to air patterns indicated, or as directed, before starting air balancing.

B. Adjustable outlets: adjust pattern for draft-free air distribution.

3.4 CLEANING

A. After installation of diffusers, registers, and grilles, inspect exposed finish. Clean exposed surfaces to remove burrs, dirt, and smudges. Replace diffusers, registers, and grilles that have damaged finishes.

END OF SECTION

SECTION 23 51 23 - GAS VENTS

PART 1 - GENERAL

1.1 RELATED DOCUMENTS

A. Drawings and general provisions of the Contract, including General and Supplementary Conditions and Division 01 Specification Sections, apply to this Section.

B. Related Sections include the following:

1. Division Section: “Common Work Results”

1.2 SUMMARY

A. Section includes venting for gas-fired appliances.

1.3 ACTION SUBMITTALS

A. Product Data: For each type of product. Include construction details, material descriptions, dimensions of individual components and profiles, and finishes for product.

1. Catalog cuts
2. Certified Sizing Calculations: Manufacturer shall certify venting system sizing calculations.
3. Installation drawings
4. Installation instructions
5. Sample of warranty

1.4 QUALITY ASSURANCE

A. Provide per NFPA 54.

B. Shall comply with UL 1738 Standard for Venting Systems for Gas Burning Appliances.

PART 2 - PRODUCTS

2.1 LISTED SPECIAL GAS VENTS

A. Available Manufacturers – Note: submitted manufacturer must be approved by the manufacturer of the gas appliance that it serves.

1. AMPCO
2. Heat-Fab Inc.

3. Metal-Fab, Inc.
4. Schebler Co.
5. Selkirk
6. Van-Packer Co.
7. MG Duravent
8. Security Chimney
9. Centrotherm InnoFlue

B. Double Wall Metal Vent:

1. Description: Double-wall metal vents tested according to UL 1738 and rated for 480 deg F continuously, with positive or negative flue pressure complying with NFPA 211.
2. Construction: Inner shell and outer jacket separated by at least a 1/2-inch airspace.
3. Inner Shell: ASTM A 959, Type 29-4C stainless steel.
4. Outer Jacket: Stainless steel.

C. Polypropylene Vent:

1. Polypropylene vent pipe for use with ANSI Category IV gas-burning appliances. Vent system shall be UL1738 listed to be suitable for exhaust temperatures up to 230°F, and a maximum positive pressure of 15 in-w.c.
2. Materials and Construction: Rigid pipe constructed of 2.2mm (minimum) thick polypropylene. Flex is double-wall polypropylene. EPDM or Viton gaskets.
3. Intertek / ETL listed to ULC-S636 Listed as a Class IIA, IIB, and IIC vent system.

D. Combustion Air: UL1738 polypropylene or ANSI/ASTM D2661 CPVC Schedule 40.

E. Provide support clamps, termination, condensate drains, roof supports, appliance adapters, elbows, and other fittings as recommended by the vent manufacturer and appliance manufacturer.

F. Roof penetration pieces shall be UL Listed and provided by the vent manufacturer. Roof curbs shall be provided on roofs greater than 12:12 pitch.

G. Termination: Provide a listed termination designed to exclude minimum 90 percent of rainfall. Termination height shall be 4’ minimum above roof.

H. Termination: Provide over/under wall-venting.

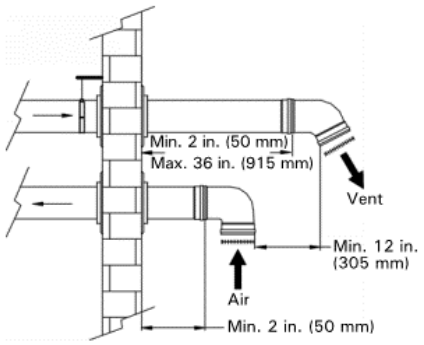

PART 3 - EXECUTION

3.1 EXAMINATION

A. Examine areas and conditions for compliance with requirements for installation tolerances and other conditions affecting performance of work.

B. Proceed with installation only after unsatisfactory conditions have been corrected.

3.2 INSTALLATION OF LISTED VENTS

A. Provide in accordance with manufacturers' recommendations, UL Listing, and state or local codes.

B. Coordinate installation of roof curbs, equipment supports, and roof penetrations. Provide in accordance with Division 7.

C. Comply with minimum clearances from combustibles and minimum termination heights according to product listing or NFPA 211, whichever is most stringent.

D. Seal between sections of positive-pressure vents according to manufacturer's written installation instructions, using sealants recommended by manufacturer. The system shall be installed and sealed per manufacturers' instructions so all joints are gas tight, preventing leakage of products of combustion into a building.

E. Support vents at intervals recommended by manufacturer to support weight of vents and all accessories, without exceeding appliance loading. Support vents and chimneys from building structure with bolts, concrete inserts, steel expansion anchors, welded studs, C-clamps, or beam clamps according to manufacturer's written instructions.

F. Lap joints in direction of flow. Slope vents and connectors in accordance with NFPA 211.

G. When installing a venting system, the following recommended venting practices apply:

1. Keep length and number of 90º elbows to a minimum.
2. Do not use back-to-back 90º elbows.
3. Use 45º elbows where possible to minimize the number of 90º elbows in case redirection of flue gas is required.

3.3 CLEANING

A. After completing system installation, including outlet fittings and devices, inspect exposed finish. Remove burrs, dirt, and construction debris and repair damaged finishes.

B. Clean vents internally, during and after installation, to remove dust and debris. Clean external surfaces to remove welding slag and mill film. Grind welds smooth and apply touchup finish to match factory or shop finish.

C. Provide temporary closures at ends of vents and chimneys that are not completed or connected to equipment.

END OF SECTION

SECTION 23 52 16 - CONDENSING BOILERS

PART 1 GENERAL

1.1 RELATED DOCUMENTS

A. Drawings and general provisions of the Contract, including General and Supplementary Conditions and Division 01 Specification Sections, apply to this Section.

B. Related Sections include the following:

1. Division Section: “Common Work Results”

1.2 SUMMARY

A. Section includes packaged, factory-fabricated and -assembled, gas-fired, condensing boilers, trim, and accessories for generating hot water.

1.3 ACTION SUBMITTALS

A. Product Data: Include performance data, operating characteristics, furnished specialties, and accessories.

B. Shop Drawings: For boilers, boiler trim, and accessories. Include plans, elevations, sections, details, and attachments to other work.

C. Include diagrams for power, signal, and control wiring.

1.4 INFORMATIONAL SUBMITTALS

A. Field quality-control reports.

B. Warranty: Special warranty specified in this Section.

1.5 CLOSEOUT SUBMITTALS

A. Operation and Maintenance Data: For boilers to include in emergency, operation, and maintenance manuals.

1.6 QUALITY ASSURANCE

A. Electrical Components, Devices, and Accessories: Listed and labeled as defined in NFPA 70, Article 100, by a testing agency acceptable to authorities having jurisdiction, and marked for intended use.

B. ASME Compliance: Fabricate and label boilers to comply with ASME Boiler and Pressure Vessel Code.

C. ASHRAE/IESNA 90.1 Compliance: Boilers shall have minimum efficiency according to "Gas and Oil Fired Boilers - Minimum Efficiency Requirements."

D. UL Compliance: Test boilers for compliance with UL 795, "Commercial-Industrial Gas Heating Equipment." Boilers shall be listed and labeled by a testing agency acceptable to authorities having jurisdiction.

1.7 WARRANTY

A. Special Warranty: Manufacturer's standard form in which manufacturer agrees to repair or replace components of boilers that fail in materials or workmanship within specified warranty period. Warranty Period:

1. Heat Exchanger Damaged by Thermal Shock: 10 years from date of Substantial Completion.
2. Heat-Exchanger Corrosion: Non-prorated for ten years from date of Substantial Completion.

PART 2 PRODUCTS

2.1 CONDENSING BOILERS

A. Manufacturers: Subject to compliance with requirements, provide products by the following:

1. Viessmann – Basis of Design
2. Heat Transfer Products “Elite”
3. Thermal Solutions
4. Buderus

B. All individual components shall be accepted as part of the system under the governing body having jurisdiction. Field approval shall not be required for any component. Boiler shall be CSA approved and shall be built in compliance with ASME Section IV, carrying the "H" stamp.

C. The boiler shall have the following approvals and listings, or be in compliance with: CSA, CRN, ASME, I=B=R, AHRI (GAMA), Energy Star

1. ASME maximum allowable working pressure (MAWP): 60 psig.
2. Certified AFUE efficiency shall not be below 92.0%.
3. ASME maximum water temperature (Fixed High Limit): 210°F.
4. All individual components shall be accepted as part of the system under the governing body having jurisdiction. Field approval shall not be required for any component. Boiler shall be CSA approved and shall be built in compliance with ASME Section IV, carrying the "H" stamp.
5. All individual components shall be accepted as part of the system under the governing body having jurisdiction. Field approval shall not be required for any component.

6. All electrical wiring is to be done in accordance with the latest editions of ANSI/NFPA 70 National Electrical Code.
7. Burner and Hydrostatic Test: Factory adjust burner to eliminate excess oxygen, carbon dioxide, oxides of nitrogen emissions, and carbon monoxide in flue gas and to achieve combustion efficiency; perform hydrostatic test.
8. Test and inspect factory-assembled boilers, before shipping, according to ASME Boiler and Pressure Vessel Code.
9. The Firing Control System shall meet CSD-1 and FM requirements.

D. The gas-fired hot water condensing heating boiler shall be fabricated of high-quality stainless steel (SA240-316Ti), featuring the latest innovations of condensing boiler technology. The boiler shall incorporate a modulating compact cylindrical stainless steel gas burner with a high-alloy stainless steel heat exchanger surface capable of operating with consistently high efficiency. The boiler control system shall maintain optimized combustion, even in case of fluctuating gas composition and air resistance. The boiler control shall have priority for both electrical and fuel savings with its intelligent combustion controller. Boiler shall be equipped with a variable speed combustion fan for quiet and economical operation.

E. The boiler shall include a single compact heat exchanger made of high-alloy stainless steel, designed based on the laminar heat transfer principle for high operational reliability and a long service life. A radial design shall be used to obtain maximum heat transfer performance in a single pass. Rectangular design of the coil is required to maximize the coil gap length and ensure maximum utilization of the heat exchanger surface. Defined gaps (0.8 mm) between coil passes and a heat exchanger length of 53 mm shall be sized to promote laminar flue gas flow for efficient heat transfer. The heat exchanger design shall allow for self-cleaning functionality.

F. The burner shall be constructed from high-grade stainless steel for universal use with natural gas or propane gas. Burner ignition shall be by a direct spark ignition system. The boiler shall be equipped with a digital boiler control unit interface.

G. Wire and cable entry to boiler shall be facilitated by strain reliefs to protect electrical wires. All controls, relays, transformers, ignition module, wiring, and redundant seat combination gas valve shall be installed behind the boiler enclosure.

H. The boiler shall be rated for zero (0") clearance to combustibles, including its vent system.

I. Standard equipment shall also include the following items:

1. Manual reset fixed high limit set at 180°F, wired in series with ignition system
2. Integrated Graphical User Interface (GUI) with digital temperature display
3. 45 psig relief valve
4. Temperature & Pressure gage and pipe fittings
5. Condensate Neutralization Kit complete with neutralization pellets
6. Low Water Cutoff w/Manual Reset & Test

2.2 CONTROLS

A. Digital boiler control supplied by Boiler Manufacturer

B. The control unit shall provide control for up to 8 boilers through KMK communication protocol, in a system with one high temperature circuit and two mixing valve circuits with weather responsive reset (with accessory module extension for heating circuits 2 & 3). Additional circuits shall be added with the order of a mixing valve controller or a custom control panel, using LON communication protocol. The outdoor reset supply temperature of every heating circuit shall result from the outside temperature, the set room temperature, the operating mode and the heating curve.

C. The controller shall have the following features:

1. EPROM memory is maintained without main power.
2. Control algorithms are PID-based.
3. LON ready.
4. Quick connect plug & play system for low voltage controls.
5. Communication with other protocols such as Modbus, BACNet and Ethernet/IP shall be available through an external gateway.

D. The controller shall be factory tested and approved by CSA as part of a package with the compatible boilers.

E. The controller shall be able to support the following output devices:

1. Domestic hot water pump.
2. Heating loop circulation pumps (with accessory module).
3. Heating loop mixing valves (with accessory module).
4. DHW re-circulation pump.

F. Control Interface: The control interface shall be a graphical user interface (°F or °C) and shall have the following features:

1. Able to display all system temperatures and set points.
2. Displays unique fault message during an alarm.
3. Program selection.
4. Domestic hot water temperature set point adjustment.
5. Information indicator with confirmation button.
6. Operating status check.
7. Adjust the display contrast.
8. Temporary occupied mode.
9. Slope and shift adjustment for heating curve.

G. The controller shall have the following additional features:

1. On/Off switch.
2. Default factory settings reset button.

3. Operating status indication light.
4. Manual override switch.
5. Fault Indicator light.
6. Operating condition scans.
7. Maintenance requirement status.
8. Relay test function.
9. Participant check (LON nodes).
10. Quick heat up and quick set-back functions.
11. Start-up and shut-down optimization functions.
12. Warm weather shut-down.
13. Four different slab curing functions (30 day cycles).
14. Energy savings mode.

H. Boiler System Supply Water Temperature Control

1. Each controlled zone shall have a calculated heating curve which describes the required supply water temperature at different outside air temperatures. The slope and shift of each heating curve shall be adjusted to fit any type of building or system. The highest required temperature of all zones shall be used together with bias from an optional room temperature sensor to determine the common boiler supply temperature set-point. The boilers shall be sequenced to maintain this temperature, configured as having either two-stage or modulating burners.
2. Subject to the system design, there shall be a choice of three different start-up and shut-down programs, one gross calorific strategy and two net calorific strategies.
3. In the unoccupied mode, the supply water temperature set-point shall be reduced by a pre-determined amount. A call for domestic hot water or an external demand signal shall override this set-point to pre-determined values.
4. Control logic shall be equipped to protect the heating system from freeze-up if left powered during the off season.

I. Domestic Hot Water Control

1. The DHW temperature shall be controlled through starting and stopping the DHW circulation pump. An automatic or individual time program shall be selected for the control of the DHW and the DHW tank re-circulating pump. An individual time program shall enable up to four switching periods per day to be set to control the DHW heating and the DHW re-circulation pump.
2. The DHW control sequence shall use an adaptive algorithm that takes into account the rate at which the temperature changes and whether the boiler will be required to supply heat after the DHW tank has been heated or whether residual boiler heat should be transferred to the DHW tank. Available domestic hot water strategies shall include: priority control (supply water set-point increases, the mixing valve closes and the heating circuit pumps are shut off on a call for DHW), modulating priority (the supply water set-point of the mixing valve circuits shall be reduced until the DHW supply temperature requirements have been met), or no priority at all.
3. A frost protection function shall energize the DHW production should the supply water temperature drop below a pre-determined value. An optional second temperature sensor placed in the cold water inlet can be incorporated to determine if DHW production should begin prematurely. If required, a solar heating control strategy using an extra temperature sensor in the solar system shall be selected.

J. Boiler Rotation: The boilers shall be rotated once a month according to an equal run-time strategy or on a schedule every 200 to 2000 hours. A dry contact shall be incorporated to make the current lead boiler the lag boiler whenever contact is closed. If the system has both condensing and non-condensing boilers, the condensing boiler shall be programmed to always be the lead.

K. Fault Management: If a fault occurs on a boiler, the fault code shall be indicated in the display window and by the flashing red fault lamp. A compiled failure alarm contact shall close in order to signal the alarm condition to a Building Automation System (BAS). The message shall also be broadcasted on the LON communication bus. The error history shall be saved to memory. An optional Output Module connected to the LON bus shall close a set of potential-free contacts for each of the following conditions: burner status, burner failure, high boiler temperature and low water cut-off alarm.

L. Scheduling: There shall be separate time schedules for central heating, DHW heating and the DHW re-circulation pump. Each device shall be able to be scheduled to switch between occupied and unoccupied modes up to four times per day.

M. Auxiliary Inputs: The following dry contact inputs shall be available to be wired to each boiler to control the following functions:

1. System disable.
2. External heat demand.
3. Change lead boiler into the lag boiler.

N. Building Management System Interface:

1. The controller shall use the LON communication protocol and shall be able to be fully integrated into a building automation system running on the LON protocol without having to use a gateway.
2. The controller shall have the ability, through the use of an Input Module, to accept a 0-10V signal from a Building Management System for the purpose of allowing remote control of the boiler supply water temperature set point.
3. The controller shall be able to fully integrate with Building Management Systems running on the BACNet or N2 communication protocols via a gateway.

O. Remote Communication Interface

1. The controller shall have the ability to be connected to a phone dialer, enabling remote control of any of the functions listed in the Auxiliary inputs section.
2. The controller shall have the ability to be connected to an Internet server interface, which shall allow access to all programming and operating parameters over the World Wide Web.

2.3 BOILER VENTING

A. Provide per manufacturers requirements and Section 23 51 23.

B. The boiler shall be equipped with a flue gas vent opening at the top of the boiler. Venting shall be a side wall horizontal or vertical sealed (direct vent) chimney system. The boiler shall

operate under Category IV positive vent pressure conditions for room air dependant operation. Venting material for room air dependant operation shall be stainless steel UL approved venting system for positive pressure or polypropylene ULC S636 listed material.

C. Provide an Al294C stainless steel or flame-resistant polypropylene concentric vent system for use with ANSI Category IV gas-burning condensing boilers, as manufactured by M&G / Duravent or Centrotherm InnoFlue. Vent system shall be listed for zero clearance to combustibles. System shall be UL-1738 and ULC-S636 listed for sustained flue gases up to 230°F

D. Provide support clamps, concentric termination, condensate drains, roof supports, appliance adapters, elbows, and other fittings as recommended by the vent manufacturer and boiler manufacturer.

2.4 LOW LOSS HEADER

A. Low loss header shall be integral with manifold distribution system sized for boiler quantity.

B. The low-loss header shall be constructed of mild carbon steel with NPS or ANSI fittings. The device must be designed and tested with various flow rates having predictable hydronic resistance charts available for the design purpose.

C. The low-loss header shall be designed and tested with time-proven, standard control strategies allowing for optimum boiler efficiency, ease of installation and programming.

D. The boiler manufacturer shall make approved drawings available, which contain piping and control diagrams with low-loss header configurations and sizing.

PART 3 EXECUTION

3.1 EXAMINATION

A. Before boiler installation, examine piping and electrical connections to verify actual locations, sizes, and other conditions affecting boiler performance, maintenance, and operations. Final boiler locations indicated on Drawings are approximate. Determine exact locations before roughing-in for piping and electrical connections.

B. Examine mechanical spaces for suitable conditions where boilers will be installed.

C. Proceed with installation only after unsatisfactory conditions have been corrected.

3.2 BOILER INSTALLATION

A. Provide gas-fired boilers according to NFPA 54.

B. Provide wall blocking and support as per manufacturers recommendations.

C. Provide manufacturer required minimum service clearances.

D. Assemble and install boiler trim.

3.3 BOILER PLANT WIRING

A. Gas-fired boilers shall be wired in accordance with NFPA 54 requirements.

B. Provide electrical devices furnished with boiler but not specified to be factory mounted.

C. Provide control wiring to field-mounted electrical devices.

D. Ground equipment according to Division 26 "Grounding and Bonding for Electrical Systems."

E. Connect wiring according to Division 26 "Low-Voltage Electrical Power Conductors and Cables."

3.4 BOILER PLANT WIRING – MAINE FUEL BOARD RULES

A. The following requirements must be met with respect to the electrical wiring and equipment used in connection with propane or natural gas burning equipment:

1. The electrical wiring and equipment used must be installed in accordance with NFPA #70, *National Electrical Code* (2011 edition);
2. Safety control circuits must be two-wire, one side grounded, having a nominal voltage not exceeding 150 Volts. A safety control or protective device must be connected so as to interrupt the ungrounded conductor; and
3. The control circuit must be connected to a power supply branch circuit fused at not more than the value appropriate for the rating of any control or device included in the circuit.

B. Emergency Switch

1. For central heating equipment and water heating appliances where the interruption of an electrical circuit will arrest the combustion process, an identified emergency shutdown switch must be placed outside of and adjacent to the entrance of the room where the appliance is located.
2. An emergency switch shall not be placed outside of any building.
3. If the entrance to the boiler room is only accessible from the outside, the emergency switch may be placed at the inside not more than one foot beyond the door opening.
4. On multi-unit installations of commercial and industrial equipment, the emergency switch must be installed in accordance with Figure 13-1.
5. On multi-unit installations, the emergency shut-off switch must be placed at the outside entrance of the room containing the appliances. The emergency switches and the thermal cut-off switches must be wired in series through individual unit relays so that, if the emergency switch is opened, all heating equipment in the room and any electrically operated gas valves will be rendered inoperable. This application also applies if there are two or more appliance rooms in the same building that are connected to a common fuel supply system.

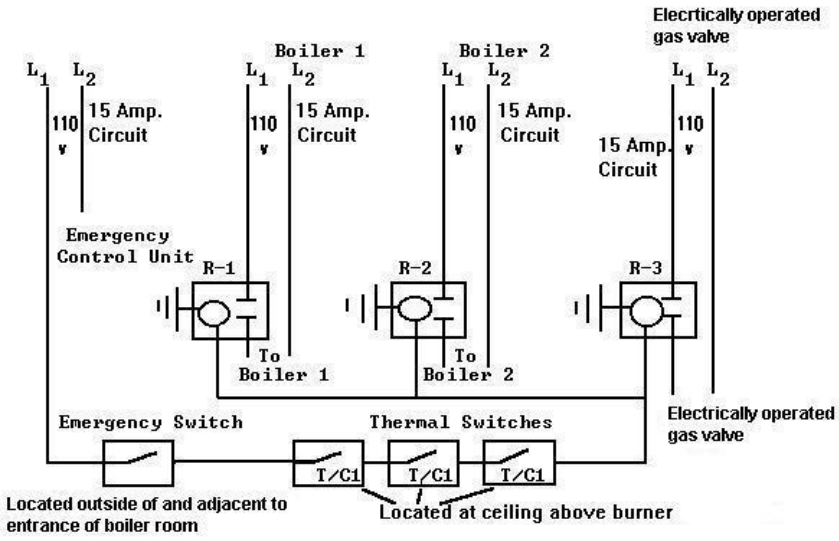

Figure 13-1 For use on commercial and industrial equipment only.
This requirement shall not apply to one and two family residences.

C. Service Switch: For central heating equipment and water heating appliances where the interruption of an electrical circuit will arrest the combustion process, a service disconnect switch for control of the burner while observing the flame must be placed at the unit, within 3´ of the burner.

D. Thermal Cut-Off Switches

1. For central heating equipment and water heating appliances where the interruption of an electrical circuit will arrest the combustion process, a thermal cut-off switch must be wired into the burner circuit to shut off the burner in the event of a fire at the unit. The switch must be placed at the highest point directly above the unit to be fired with the thermal element pointed downwards, and must be placed on the bottom of the floor joist or stringer at the front of the unit. In no case shall it be lower than the point where the flue connector enters the chimney. The switch must be wired to shut off the burner, circulating fan, forced or induced draft fan and any electrically-operated gas valves. A thermal electric switch is required for each electrically-powered gas-fired unit in a multi-appliance installation.
2. On multi-unit installations the emergency and thermal electrical switches must be wired in series through individual unit relays so that, if one switch is opened, all equipment will be rendered inoperable whenever the "EMERGENCY" switch is opened.

3.5 LOW WATER CONTROL FOR BOILERS

A. All gas-fired boilers must be provided with a properly installed and operating low water cut-off.

B. Provide a Taco LF Series, or equal, low water cutoff in the HW piping, located as recommended by the boiler manufacturer. The low water cut-off may be installed in or attached to the boiler at the level recommended by the boiler manufacturer, but in no case shall the low water cut-off be installed below the crown sheet. The low water cut-off, when not installed

directly in the boiler, may be installed either in the main supply line (vertical riser) as close to the boiler as possible or in a water column of continuous piping attached directly to the boiler.

C. No Obstructions: No valves or other obstructive devices shall be installed between the boiler and safety controls.

D. A pressure switch installed by the manufacturer and specified by the manufacturer as low-water protection shall be accepted as meeting the criteria of Chapter 10, Section 10 .3 .5 of NFPA #54 (2012 edition).

3.6 CONNECTIONS

A. Piping installation requirements are specified in other Sections. Drawings indicate general arrangement of piping, fittings, and specialties.

B. Provide piping adjacent to boiler to allow service and maintenance.

C. Provide piping from equipment drain connection to nearest floor drain. Piping shall be at least full size of connection. Provide an isolation valve if required.

D. Connect gas piping to boiler gas-train inlet with union. Piping shall be at least full size of gas train connection. Provide a reducer if required.

E. Provide pressure regulator to provide proper gas pressure to boilers. Provide straight piping at inlet and outlet of pressure regulator.

F. Connect hot-water piping to supply- and return-boiler tappings with shutoff valve and union at each connection.

G. Provide piping from safety relief valves to nearest floor drain.

H. Connect PVC drain piping to the boiler, route to the neutralizer kit. Pipe to the nearest floor drain.

3.7 INSTALLATION OF VENTS

A. Provide per manufacturers requirements and Section 23 51 23.

3.8 FIELD QUALITY CONTROL

A. Thoroughly flush the system (without boiler connected) to remove sediment.

B. Testing Agency: Engage a qualified testing agency to perform tests and inspections.

C. Manufacturer's Field Service: Engage a factory-authorized service representative to test and inspect components, assemblies, and equipment installations, including connections.

D. Perform the following tests and inspections with the assistance of a factory-authorized service representative:

1. Perform installation and startup checks according to manufacturer's written instructions.
2. Leak Test: Hydrostatic test. Repair leaks and retest until no leaks exist.
3. Operational Test: Start units to confirm proper motor rotation and unit operation. Adjust air-fuel ratio and combustion.
4. Test and adjust controls and safeties. Replace damaged and malfunctioning controls and equipment.

    a. Check and adjust initial operating set points and high- and low-limit safety set points of fuel supply, water level and water temperature.
    b. Set field-adjustable switches and circuit-breaker trip ranges as indicated.

E. Remove and replace malfunctioning units and retest as specified above.

F. Prepare test and inspection reports.

G. Occupancy Adjustments: When requested within 12 months of date of Substantial Completion, provide on-site assistance in adjusting system to suit actual occupied conditions. Provide up to two visits to Project during other than normal occupancy hours for this purpose.

H. Performance Tests:

1. Engage a factory-authorized service representative to inspect component assemblies and equipment installations, including connections, and to conduct performance testing.
2. Boilers shall comply with performance requirements indicated, as determined by field performance tests. Adjust, modify, or replace equipment to comply.
3. Perform field performance tests to determine capacity and efficiency of boilers.

    a. Test for full capacity.
    b. Test for boiler efficiency at low fire 20, 40, 60, 80, 100, 80, 60, 40, and 20 percent of full capacity. Determine efficiency at each test point.

4. Repeat tests until results comply with requirements indicated.
5. Provide analysis equipment required to determine performance.
6. Provide temporary equipment and system modifications necessary to dissipate the heat produced during tests if building systems are not adequate.
7. Notify Architect in advance of test dates.
8. Document test results in a report and submit to Architect.

3.9 DEMONSTRATION

A. Engage a factory-authorized service representative to train Owner's maintenance personnel to adjust, operate, and maintain boilers. Refer to Division 1.

END OF SECTION

SECTION 23 74 13 - ROOFTOP AIR CONDITIONERS

PART 1 - GENERAL

1.1 RELATED DOCUMENTS

A. Drawings and general provisions of the Contract, including General and Supplementary Conditions and Division 1 Specification Sections, apply to this Section.

B. Related Sections include the following:

1. Division 23 Section Ductwork
2. Division 23 Section “Common Work Results for HVAC”

1.2 SUMMARY

A. This Section includes:

1. Packaged rooftop HVAC units (RTU)

1.3 SUBMITTALS

A. Shop Drawings: Indicate assembly, unit dimensions, weight loading, required clearances, construction details, field connection details, electrical characteristics and connection requirements.

B. Product Data:

1. Provide literature that indicates dimensions, weights, capacities, ratings, and electrical characteristics and connection requirements.
2. Provide data on filter media, filter performance, filter assembly, and filter frames.
3. Provide computer generated fan curves with specified operating point clearly plotted.
4. Submittals shall demonstrate that scheduled unit leaving air temperature (LAT) is met, that fan and motor heat temperature rise (TR) have been considered, and scheduled entering air temperature (EAT) equals mixed air temperature (MAT). Draw-thru cooling - Scheduled EAT equals cooling coil EAT and scheduled unit LAT equals cooling coil LAT plus TR.

C. Maintenance Data: Provide instructions for installation, maintenance and service.

1.4 QUALITY ASSURANCE

A. Product Options: Drawings indicate size, profiles, and dimensional requirements of rooftop air conditioners and are based on the specific system indicated.

B. Electrical Components, Devices, and Accessories: Listed and labeled as defined in NFPA 70, Article 100, by a testing agency acceptable to authorities having jurisdiction, and marked for intended use.

C. Fabricate and label refrigeration system to comply with ASHRAE 15, "Safety Code for Mechanical Refrigeration."

D. Energy-Efficiency Ratio: Equal to or greater than prescribed by ASHRAE 90.1, "Energy Efficient Design of New Buildings except Low-Rise Residential Buildings."

E. Coefficient of Performance: Equal to or greater than prescribed by ASHRAE 90.1, "Energy Efficient Design of New Buildings except Low-Rise Residential Buildings."

F. ARI Certification: Units shall be ARI certified and listed.

G. Rate rooftop air-conditioner capacity according to ARI 340/360, "Commercial and Industrial Unitary Air-Conditioning and Heat Pump Equipment."

H. Sound Power Level Ratings: Comply with ARI 270, "Sound Rating of Outdoor Unitary Equipment."

1.5 COORDINATION

A. Coordinate installation of roof curbs, structural steel, and roof penetrations.

1.6 WARRANTY

A. Special Warranty: Manufacturer's standard form in which manufacturer agrees to replace components of rooftop air conditioners that fail in materials or workmanship within specified warranty period.

1. The manufacturer shall provide 12 month parts only warranty. Defective parts will be repaired or replaced during the warranty period at no charge. The warranty period shall commence at start up, or 6 months after shipment, whichever occurs first.
2. The manufacturer shall provide extended 4-year parts only warranty on the compressor.
3. The manufacturer shall provide extended 9-year parts only warranty on the compressor.
4. The manufacturer shall provide extended 10-year parts only warranty on the gas heater.

1.7 EXTRA MATERIALS

A. Furnish extra materials described below that match products installed and that are packaged with protective covering for storage and identified with labels describing contents.

1. Fan Belts: One set for each belt-drive fan.
2. Filters: One set of filters for each filter bank.

PART 2 - PRODUCTS

2.1 ROOFTOP AIR CONDITIONER

A. Manufacturers:

1. Trane (Basis of Design)
2. Daikin
3. Johnson Controls.

B. The units shall be down discharge airflow. Cooling performance shall be rated in accordance with ETL testing procedures. All units shall be factory assembled, internally wired, and 100 percent run tested to check cooling operation, fan and blower rotation, and control sequence before leaving the factory. Wiring internal to the unit shall be colored and numbered for simplified identification. Units shall be ETL listed and labeled, classified in accordance to UL 1995/CAN/CSA No. 236-M40 for Central Cooling Air Conditioners. Canadian units shall be CSA Certified.

C. Unit casing shall be constructed of zinc-coated, heavy gauge, galvanized steel. Exterior surfaces shall be cleaned, phosphatized, and finished with a weather-resistant baked enamel finish. Unit's surface shall be tested 672 hours in a salt spray test in compliance with ASTM B117. Unit shall have a 2-inch thick Antimicrobial Insulation with an R-value of 13. All insulation edges shall be either captured or sealed. The unit's base pan shall have no penetrations within the perimeter of the curb other than the raised downflow supply/return openings to provide an added water integrity precaution, if the condensate drain backs up. The top cover shall be one piece construction or, where seams exist, it shall be double-hemmed and gasket-sealed. The ribbed top adds extra strength and enhances water removal from unit top.

D. Cooling performance shall be rated in accordance with ETL testing procedures. All units shall be factory assembled, internally wired, and 100 percent run tested to check cooling operation, fan and blower rotation, and control sequence before leaving the factory. Wiring internal to the unit shall be colored and numbered for simplified identification. Units shall be ETL listed and labeled, classified in accordance to UL 1995/CAN/CSA No. 236-M40 for Central Cooling Air Conditioners.

E. Unit casing shall be constructed of zinc-coated, heavy gauge, galvanized steel. Exterior surfaces shall be cleaned, phosphatized, and finished with a weather-resistant baked enamel finish. Unit's surface shall be tested 672 hours in a salt spray test in compliance with ASTM B117. Unit shall have a 2-inch thick Antimicrobial Insulation with an R-value of 13. All insulation edges shall be either captured or sealed.

F. The unit's base pan shall have no penetrations within the perimeter of the curb other than the raised downflow supply/return openings to provide an added water integrity precaution, if the condensate drain backs up. The top cover shall be one piece construction or, where seams exist, it shall be double-hemmed and gasket-sealed. The ribbed top adds extra strength and enhances water removal from unit top.

G. The drain pan shall be a single-walled assembly made of Type 304 stainless steel. It is sloped in two planes and is fully drainable. The coils shall be mounted above the drain pan to allow easy inspection and cleaning of the drain pan.

H. The outside air damper has a unit-controlled actuator with parallel-blades. The blade construction is a 14-gauge galvanized steel, roll-formed airfoil-type. Air returns vertically through the unit base. Dampers are low-leak. Each damper has a unit-controlled actuator.

I. Evaporator and Condenser Coils: Internally finned copper tubes mechanically bonded to a configured aluminum plate fin shall be standard. Coils shall be leak tested at the factory to ensure the pressure integrity. The evaporator coil and condenser coil shall be leak tested to 500 psig and pressure tested to 500 psig. The condenser coil shall have a fin design with slight gaps for ease of cleaning. Evaporator coil will have four or six interlaced rows for superior sensible and latent cooling.

J. Hail guards shall be installed on the outside of the condenser coil. The guards shall consist of perforated metal, of the same gauge and color as the unit itself. Airflow through the hail guards shall not be restricted due to location or size of the perforations. Guards shall be removable to accommodate coil cleaning.

K. Compressor: Digital Scroll Both Circuits: All units shall have direct-drive, hermetic, digital scroll type compressors with centrifugal type oil pumps. Motor shall be suction gas-cooled and shall have a voltage utilization range of plus or minus 10 percent of unit nameplate voltage. Internal overloads shall be provided with the scroll compressors. Crankcase heaters shall be included. Unit shall be able to fully modulate from 20%-100%.

L. Provide a modulating hot-gas reheat coil located on the leaving air side of the evaporator coil pre-piped and circuited with a low pressure switch.

M. Supply Fans: Fan motor shall be direct drive type with factory installed Variable Frequency Drive or electronic commuted motor (ECM) with integrated power electronics. All motors shall be thermally protected. All indoor fan motors meet the U.S. Energy Policy Act of 2005 (EPACT).

N. The condenser fans shall be direct-drive, statically and dynamically balanced, draw-through in the vertical discharge position. The fan motor shall be permanently lubricated and shall have built-in thermal overload protection.

O. The unit’s interior and exterior surfaces have a four to six mil spray-on protective coating applied with an air-dry process.

P. Provide a stainless steel coil housing.

Q. The unit shall have a factory installed and integrated 100% outdoor air hood with Class 1A rated damper controlled a by direct coupled actuator and 2 inch permanent and washable aluminum mesh filters accessible through a hinged access panel. In addition, one row of 2 inch MERV-8 rated prefilters (30 percent) and 4 inch MERV-14 final filter (95 percent) installed prior to the evaporator coil.

R. Filter Status Switch: This option indicates when filters require cleaning or replacement. The Filter Status switch triggers an information-only diagnostic message on the human interface and will allow continued unit operation.

S. A 3-pole, molded case, HACR circuit breaker with provisions for through the base electrical connections shall be installed. The disconnect switch will be installed in the unit in a water tight

enclosure. Wiring will be provided from the switch to the unit high voltage terminal block. The switch will be UL/CSA agency recognized. The disconnect switch will be sized per NEC and UL guidelines but will not be used in place of unit overcurrent protection. A powered 120 volt, 10 amp, 2 plug convenience outlet shall be factory installed. A service receptacle disconnect shall be installed. The convenience outlet is powered from the line side of the disconnect or circuit breaker, and therefore will not be affected by the position of the disconnect or circuit breaker.

T. Factory wired Voltage/Phase monitor shall be included as standard. In the event of any of the following, the units will be shut down and a fault code will be stored in the monitor for the most recent 25 faults. Upon correction of the fault condition the unit will reset and restart automatically.

1. Phase Unbalance Protection: Factory set 2%
2. Over/Under/Brown Out Voltage Protection: +/-10% of nameplate voltage
3. Phase Loss/Reversal

U. Unit Controls:

1. Unit is completely factory wired with necessary controls and contactor pressure lugs for power wiring. Units will provide an external location for mounting fused disconnect device. Micro-processor controls are provided for all 24 volt control functions. The resident control algorithms will make all heating, cooling and/or ventilating decisions in response to electronic signals from sensors measuring outdoor temperature and humidity as well as indoor temperature. The control algorithm maintains accurate temperature control, minimizes drift from set point and provides better building comfort. A centralized micro-processor (OACM) will provide anti-short cycle timing for a higher level of machine protection. Terminals are provided for a field installed dry contact or switch closure to put the unit in the Occupied or Unoccupied modes.
2. BACnet Communication Interface: Provide to allow the unit to communicate with the Honeywell EBI BAS system.

V. Building Automation System Interface (Honeywell EBI-Coordinate with Section 23 09 93):
1. The Building Automation System (BAS) shall send the controller Occupied Bypass, Morning Warm-up/Pre-Cool, Occupied/Unoccupied and Heat/Cool modes. The BAS shall also send the discharge air temperature setpoint and the duct static pressure setpoint. If a BAS is not present, or communication is lost with the BAS the controller shall operate using default modes and setpoints.
2. Occupied (DOAU):
   a. During occupied periods, the supply fan and relief fan shall run continuously and the outside air damper shall open to maintain the current airflow setpoint. The unit controller shall control the supply fan speed to maintain the current supply duct static pressure setpoint (adj.). The unit controller shall control the relief fan speed to maintain the current building static pressure setpoint (adj.). The DX cooling and the electric heat shall control to maintain the active discharge air temperature setpoint.
3. Unoccupied (DOAU):
   a. Space conditions shall be communicated via BAS or a hardwire space/temperature humidity sensor. Unoccupied starting sequence shall begin when the Unoccupied Heating, Cooling, or Dehumidification Mode is enabled. Otherwise, the unit shall remain dormant with the supply fan disabled. Supply Fan Startup sequence is

identical to occupied operation. The outdoor air damper shall be commanded to close, and the return air damper shall open. If the unit is under Economizer conditions, the Outdoor Air Damper Position Command shall open to the Outdoor Air Damper Maximum Position Setpoint. Unoccupied Heating Mode shall be enabled when the Space Temperature falls below the Unoccupied Heating Enable Setpoint. During Unoccupied Heating Mode the unit shall run the heat to maintain 90°F for the discharge air temperature. Unoccupied Heating Mode shall be disabled when the Space Temperature rises 2 deg. F above the Unoccupied Heating Setpoint. When there is no call for Unoccupied Heating Mode or Unoccupied Dehumid Mode, Unoccupied Cooling Mode shall be enabled when the Space Temperature rises above the Unoccupied Cooling Enable Setpoint. During Unoccupied Cooling Mode the unit shall run the cooling to maintain 50 deg. F for the discharge air temperature. Unoccupied Cooling Mode shall be disabled when the Space Temperature rises 2 deg. F above the Unoccupied Cooling Enable Setpoint.

4. Optimal Start:
   a. The BAS shall monitor the scheduled occupied time, occupied space setpoints and space temperature to calculate when the optimal start occurs.
5. Morning Warm-Up Mode:
   a. During optimal start, if the average space temperature is below the occupied heating setpoint a morning warm-up mode shall be activated. When morning warm-up is initiated the unit shall enable the heating and fan(s). When the space temperature reaches the occupied heating setpoint (adj.), the unit shall transition to the occupied mode.

6. Pre-Cool Mode:
   a. During optimal start, if the average space temperature is above the occupied cooling setpoint, pre-cool mode shall be activated. When pre-cool is initiated the unit shall enable the fan and cooling. When the space temperature reaches occupied cooling setpoint (adj.), the unit shall transition to the occupied mode.

7. Optimal Stop:
   a. The BAS shall monitor the scheduled unoccupied time, occupied setpoints and space temperature to calculate when the optimal stop occurs. When the optimal stop mode is active the unit controller shall maintain the space temperature to the space temperature offset setpoint.

8. Occupied Bypass:
   a. The BAS shall monitor the status of the ON and CANCEL buttons of the space temperature sensors. When an occupied bypass request is received from a space sensor, the unit shall transition from its current occupancy mode to occupied bypass mode and the unit shall maintain the space temperature to the occupied setpoints (adj.).

9. Heat/Cool Mode:
   a. COOLING: The unit controller shall use the discharge air temperature sensor and discharge air temperature cooling setpoint to determine when to initiate requests for cooling. Discharge air setpoint shall be maintained by controlling the cooling as required.
   b. HEATING: The unit controller shall use the discharge air temperature sensor and discharge air temperature heating setpoint to determine when to initiate requests

for heating. Discharge air setpoint shall be maintained by controlling the heating as required. During Unoccupied Heating or Morning Warm-Up Mode, the unit heat request shall be communicated to the system VAVs prior to commencing heating operation to allow VAV units to open. The variable speed drive shall be commanded to 100% and the heat shall be staged on and off to satisfy the zone temperature setpoint.

10. Cooling (DOAU):
    a. Cooling Mode shall be enabled when the Discharge Air Temperature Setpoint, plus the deadband of 2 deg.F. During Cooling Mode, Cooling Capacity shall be adjusted to maintain Discharge Air Temperature Setpoint. Dehumidification Mode shall take priority over Cooling Mode. Circuit 1and 2 refrigeration pressures shall be monitored, and Cooling Capacity shall be limited to prevent the indoor coil from freezing.

11. Primary Heating (DOAU):
    a. Heating Mode shall be enabled when the Discharge Air Temperature is below the Discharge Air Temperature Setpoint plus the deadband of 2 deg. F (adj.). Dehumidification Mode shall take priority over Heating Mode. During Heating Mode, Heat Capacity shall be adjusted to maintain the Discharge Air Temperature to Discharge Air Temperature Setpoint. The unit controller shall monitor the status of the heater using Heat On Off Status Local. In the event of ignition failure, the unit shall make three ignition attempts before displaying Diagnostic: Heat Failure. The unit shall shut down when a heat failure occurs and shall a reset four hours later to re-attempt ignition.

12. Dehumidification (DOAU):
    a. Dehumidification Mode shall be enabled whenever the Outdoor Air Dewpoint rises above the Outdoor Air Dewpoint Enable Setpoint. During Dehumidification Mode, Cooling Capacity shall be adjusted to maintain the Dehumidification Temperature Setpoint (adjustable). Hot Gas Reheat Valve Command shall be adjusted to maintain Discharge Air Temperature Setpoint .

13. Supply Fan Operation (DOAU):
    a. When the unit becomes occupied, the outdoor air damper and the return air damper shall adjust to the minimum outdoor air damper position. After the dampers have modulated the fan sequence can begin. When the fan start sequence has begun, the unit controller shall command the variable speed drive for the supply fan to 50%. A supply fan status switch shall prove fan status. If after 2 minutes (adj.) the fan does not have a proven signal, the Supply Fan Failure alarm shall be displayed and the unit shall shutdown requiring a manual reset. After the startup sequence, the unit controller shall control the speed of the supply fan to maintain a Supply Duct Static Pressure Setpoint. If the supply duct static pressure reaches 3.00 inches of W.C. (adj.), the high limit pressure switch shall shut down the unit, requiring a manual reset to re-start the unit. Supply and relief fans are interlocked via software; a failure of either shall disable both.

14. Static Pressure High Limit:
    a. If for any reason the supply air pressure exceeds the supply air pressure high limit, the supply fan shall shut down. The unit shall be allowed to restart three times after a 15 minute off period. If the overpressurization condition occurs on the fourth

restart, the unit shall shut down and a manual reset diagnostic is displayed at the remote panel and/or the BAS system.

15. Filter Status:
    a. A differential pressure switch shall monitor the differential pressure across the filter(s) when the fan is running. If the switch closes during normal operation a dirty filter alarm shall annunciate at the BAS.

16. Smoke Detector Shutdown:
    a. The unit shall shut down in response to a signal from the smoke detector indicating the presence of smoke. The smoke detector shall be interlocked to the unit through the dry contacts of the smoke detector. A manual reset of the smoke detector shall be required to restart the unit.

W. Roof Curb, Downflow: The roof curb shall be designed to mate with the downflow unit and provide support and a watertight installation when installed properly. The roof curb design shall allow field-fabricated rectangular supply/return ductwork to be connected directly to the curb. Curb design shall comply with NRCA requirements. Curb shall ship knocked down for field assembly and include wood nailer strips. Curb shall include factory applied insulation, 1” minimum. Curb shall be 14” high, minimum.

PART 3 - EXECUTION

3.1 INSTALLATION

A. Provide units’ level and plumb, maintaining manufacturer's recommended clearances.

B. Curb Support: Provide roof curb on roof structure, level and secure, according to NRCA's "Low-Slope Membrane Roofing Construction Details Manual," Illustration "Raised Curb Detail for Rooftop Air Handling Units and Ducts." Provide and secure rooftop air conditioners on curbs and coordinate roof penetrations and flashing with roof construction. Secure units to curb support with anchor bolts.

3.2 CONNECTIONS

A. Piping installation requirements are specified in other Division 23 Sections. Drawings indicate general arrangement of piping, fittings, and specialties.

B. Provide piping adjacent to machine to allow service and maintenance.

C. Duct installation requirements are specified in other Division 23 Sections. Drawings indicate the general arrangement of ducts. The following are specific connection requirements:

1. Provide ducts to termination in roof curb.
2. Remove roof decking only as required for passage of ducts. Do not cut out decking under entire roof curb.
3. Terminate return-air duct through roof structure and insulate space between roof and bottom of unit with 2-inch-thick, acoustic duct liner.
4. Provide flexible duct connections.

D. Electrical System Connections: Comply with applicable requirements in Division 16 Sections for power wiring, switches, and motor controls.

3.3 FIELD QUALITY CONTROL

A. Manufacturer's Field Service: Engage a factory-authorized service representative to inspect field-assembled components and equipment installation, including piping and electrical connections. Report results in writing.

1. Leak Test: After installation, fill water and steam coils with water and test coils and connections for leaks. Repair leaks and retest until no leaks exist.
2. Charge refrigerant coils with refrigerant and test for leaks. Repair leaks and retest until no leaks exist.
3. Fan Operational Test: After electrical circuitry has been energized, start units to confirm proper motor rotation and unit operation. Remove malfunctioning units, replace with new units, and retest.
4. Test and adjust controls and safeties. Replace damaged and malfunctioning controls and equipment.
5. Verify that specified filters are installed. Check for leakage around filters.
6. Verify that cooling coil drain pans have a positive slope to drain.
7. Verify that the cooling coil condensate drain trap maintains an air seal.

3.4 STARTUP SERVICE

A. Engage a factory-authorized service representative to perform startup service.

B. Do not operate units for any purpose, temporary or permanent, until ductwork is clean, filters and remote controls are in place, bearings lubricated, and manufacturers' installation instructions have been followed.

C. Complete installation and startup checks according to manufacturer's written instructions and do the following:

1. Inspect for visible damage to unit casing.
2. Inspect for visible damage to furnace combustion chamber.
3. Inspect for visible damage to compressor, air-cooled outside coil, and fans.
4. Inspect internal insulation.
5. Verify that labels are clearly visible.
6. Verify that clearances have been provided for servicing.
7. Verify that controls are connected and operable.
8. Verify that filters are installed.
9. Clean outside coil and inspect for construction debris.
10. Clean furnace flue and inspect for construction debris.
11. Adjust vibration isolators.
12. Inspect operation of barometric dampers.
13. Lubricate bearings on fan.
14. Inspect fan-wheel rotation for movement in correct direction without vibration and binding.
15. Adjust fan belts to proper alignment and tension.

16. Start unit according to manufacturer's written instructions.

    a. Start refrigeration system in summer only.
    b. Complete startup sheets and attach copy with Contractor's startup report.

17. Inspect and record performance of interlocks and protective devices; verify sequences.
18. Operate unit for an initial period as recommended or required by manufacturer.
19. Calibrate thermostats.
20. Adjust and inspect high-temperature limits.
21. Burner: Final adjustments shall be made in the field at initial start-up by a qualified service technician to verify that installation and operation of the burner is according to specifications.
22. Inspect outside-air dampers for proper stroke and interlock with return-air dampers.
23. Start refrigeration system and measure and record the following:

    a. Coil leaving-air, dry- and wet-bulb temperatures.
    b. Coil entering-air, dry- and wet-bulb temperatures.
    c. Outside-air, dry-bulb temperature.
    d. Outside-air-coil, discharge-air, dry-bulb temperature.

24. Inspect controls for correct sequencing of heating, mixing dampers, refrigeration, and normal and emergency shutdown.
25. Measure and record the following minimum and maximum airflows. Plot fan volumes on fan curve.

    a. Supply-air volume.
    b. Return-air volume.
    c. Relief-air volume.
    d. Outside-air intake volume.

26. Simulate maximum cooling demand and inspect the following:

    a. Compressor refrigerant suction and hot-gas pressures.
    b. Short circuiting of air through outside coil or from outside coil to outside-air intake.

27. After startup and performance testing, change filters, vacuum hydronic coils, lubricate bearings, and inspect operation of power vents.
28. Check belt tension two times during the first 24 hours of operation and periodically thereafter.

D. Adjust initial temperature and humidity set points.

E. Set field-adjustable switches and circuit-breaker trip ranges as indicated.

F. Occupancy Adjustments: When requested within 12 months of date of Substantial Completion, provide on-site assistance in adjusting system to suit actual occupied conditions. Provide up to two visits to site outside normal occupancy hours for this purpose, without additional cost.

3.5 DEMONSTRATION

A. Engage a factory-authorized service representative to train Owner's maintenance personnel to adjust, operate, and maintain rooftop air conditioners. Refer to Division 1.

END OF SECTION

SECTION 23 81 30 – DUCTLESS SPLIT-SYSTEM AIR-CONDITIONING UNITS

PART 1 - GENERAL

1.1 RELATED DOCUMENTS

A. Drawings and general provisions of the Contract, including General and Supplementary Conditions and Division 1 Specification Sections, apply to this Section.

B. Division 23 Section “Common Work Results”

1.2 SUMMARY

A. This Section ductless mini-split systems.

1.3 SUBMITTALS

A. Product Data: Include rated capacities, furnished specialties, and accessories for each type of product indicated. Include performance data in terms of capacities, outlet velocities, static pressures, sound power characteristics, motor requirements, and electrical characteristics.

B. Operation and Maintenance Data: For split-system air-conditioning units to include in emergency, operation, and maintenance manuals.

1.4 QUALITY ASSURANCE

A. Product Options: Drawings indicate size, profiles, and dimensional requirements of split-system units and are based on the specific system indicated. Refer to Division 1 Section "Product Requirements."

B. Electrical Components, Devices, and Accessories: Listed and labeled as defined in NFPA 70, Article 100, by a testing agency acceptable to authorities having jurisdiction, and marked for intended use.

C. Energy-Efficiency Ratio: Equal to or greater than prescribed by ASHRAE 90.1, "Energy Efficient Design of New Buildings except Low-Rise Residential Buildings."

D. Coefficient of Performance: Equal to or greater than prescribed by ASHRAE 90.1, "Energy Efficient Design of New Buildings except Low-Rise Residential Buildings."

E. A dry air holding charge shall be provided in the indoor section.

F. The outdoor unit shall be pre-charged with R-410a refrigerant for 70 feet of refrigerant tubing.

1.5 WARRANTY

A. The units shall have a manufacturer's parts and defects warranty for a period five (5) years from date of installation. The compressor shall have an extended warranty of seven (7) years from date of installation. If, during this period, any part should fail to function properly due to defects in workmanship or material, it shall be replaced or repaired at the discretion of the manufacturer. This warranty will not include labor.

PART 2 - PRODUCTS

2.1 MANUFACTURERS

A. Manufacturers: Subject to compliance with requirements, provide products by one of the following:

1. Mitsubishi
2. Daikin
3. Fujitsu
4. Trane

2.2 DUCTLESS MINI SPLIT SYSTEMS

A. The outdoor units shall be specifically designed to work with the manufacturer's family of indoor units. The outdoor unit shall be completely factory assembled, piped, and wired. Each unit shall be run tested at the factory prior to shipment.

1. Unit Cabinet:

   a. The casing shall be fabricated of galvanized steel, bonderized, finished with an electrostatically applied, thermally fused acrylic or polyester powder coating for corrosion protection. Assembly hardware shall be cadmium plated for weather resistance.
   b. Cabinet color shall be Munsell 3Y 7.8/1.1.
   c. Two (2) mild steel mounting feet, traverse mounted across the cabinet base pan, welded mount, providing four (4) slotted mounting holes shall be furnished. Assembly shall withstand lateral wind gust up to 155 MPH to meet applicable weather codes.

2. Fan:

   a. The unit shall be furnished with a direct drive, high performance propeller type fan.
   b. The condenser fan motor shall be a variable speed, direct current (DC) motor and shall have permanently lubricated bearings.
   c. Fan speed shall be switch automatically according to the number of operating indoor units and the compressor operating frequency.
   d. The fan motor shall be mounted with vibration isolation for quiet operation.
   e. The fan shall be provided with a raised guard to prevent contact with moving parts.

f. The outdoor unit shall have horizontal discharge airflow.
g. Outdoor unit sound level shall not exceed 55 dB (A).

3. Coil:

a. The outdoor unit coil shall be of nonferrous construction with lanced or corrugated plate fins on copper tubing.
b. The coil shall be protected with an integral guard.
c. Refrigerant flow from the outdoor unit to the indoor units shall be independently controlled by means of individual electronic linear expansion valves for each indoor unit.
d. Outdoor unit shall be pre-charged with sufficient R-410a refrigerant for up to one hundred and thirty-one (131) feet of refrigerant piping.
e. All refrigerant lines between outdoor and indoor units shall be of annealed, refrigeration grade copper tubing, ARC Type, meeting ASTM B280 requirements, individually insulated in twin-tube, flexible, closed-cell, CFC-free (ozone depletion potential of zero), elastomeric material for the insulation of refrigerant pipes and tubes with thermal conductivity equal to or better than 0.27 BTU-inch/hour per Sq Ft / °F, a water vapor transmission equal to or better than 0.08 Perm-inch and superior fire ratings such that insulation will not contribute significantly to fire and up to 1” thick insulation shall have a Flame-Spread Index of less than 25 and a Smoke-development Index of less than 50 as tested by ASTM E 84 and CAN / ULC S-102.
f. All refrigerant connections between outdoor and indoor units shall be flare type.

4. Compressor:

a. The compressor shall be a high performance, hermetic, inverter driven, variable speed, dual rotary type manufactured by Mitsubishi Electric Corporation.
b. The compressor motor shall be direct current (DC) type equipped with a factory supplied and installed inverter drive package.
c. The outdoor unit shall be equipped with a suction side refrigerant accumulator.
d. The compressor will be equipped with an internal thermal overload.
e. The compressor shall be mounted to avoid the transmission of vibration.

5. Piping Requirements: The outdoor unit must have the ability to operate within the following refrigerant piping and height limitations without the need for line size changes, traps, or additional oil.
6. Electrical:

a. The unit electrical power shall be 208/230 volts, 1-phase, 60 hertz.
b. The unit shall be capable of satisfactory operation within voltage limits of 187 volts to 253 volts.
c. The outdoor unit shall be controlled by the microprocessors located in the indoor unit and in the outdoor unit communicating system status, operation, and instructions digitally over A-Control – a system directing that the indoor unit be powered directly from the outdoor unit using a 3-wire, 14 gauge AWG connection plus ground.
d. The outdoor unit shall be equipped with Pulse Amplitude Modulation (PAM) compressor inverter drive control for maximum efficiency with minimum power consumption.

B. The indoor unit shall be fully factory assembled, wired, and run tested prior to shipment. Contained within the indoor unit shall be all factory wiring, piping, control circuit board, fan, and fan motor. The unit shall have a self-diagnostic function, 3-minute restart time delay mechanism, an auto restart function, an emergency / test operation. Indoor unit shall be charged with dry air before shipment from factory.

1. The indoor units shall be capable of working with single-zone or multi-zone outdoor units.
2. Unit Cabinet:

   a. The casing shall have a white finish– Munsell 1.0Y 9.2/0.2.
   b. Multi directional drain and refrigerant piping, offering three (3) direction pipe alignment for all refrigerant piping and two (2) direction pipe alignment for condensate draining shall be standard.
   c. Wall Mounted Units: There shall be a separate back plate that secures the indoor unit firmly to the wall. The installation-plate shall be securely attached to the wall using appropriate anchor method. Contractor shall determine the best method and be responsible for proper mounting of the installation plate to the wall.

3. Fan - Wall Mounted and Floor Standing:

   a. The indoor unit fan shall be an assembly with a line-flow fan direct driven by a single motor.
   b. The fan shall be statically and dynamically balanced and run on a motor with permanently lubricated bearing.
   c. A manual adjustable guide vane shall be provided with the ability to change the airflow from side to side (left to right).
   d. An integral, motorized, multi-position, horizontal air sweep flow louver shall provide for uniform air distribution, up and down. Five (5) positions plus Auto and Swing shall be provided, controlled from the remote controller.
   e. The indoor fan shall operate at one of five (5) speeds: Super High, High, Medium, Low, and Quiet plus Auto Fan Mode for models up to 18,000 BTU/h, and four (4) speeds: Powerful, High, Medium and Low plus Auto Fan Mode for the 24,000 BTU/h model. All speeds shall be selected from the remote controller.

4. Filters, wall, and ceiling: Return air shall be filtered by means of an easily removed, washable, Catechin, Antioxidant Pre-filter and a separate Anti-allergy enzyme filter – blue, pleated type.

5. Coil:

   a. The indoor unit coil shall be of nonferrous construction with smooth plate fins on copper tubing.
   b. The refrigerant tubing shall have inner groves for high efficiency heat exchange.
   c. All tube joints shall be brazed with PhosCopper or silver alloy.
   d. The coils shall be pressure tested at the factory.
   e. A sloped, corrosion resistant condensate pan with drain shall be provided under the coil.
   f. Provide the optional drain pan level switch (DPLS1), designed to connect to the control board, shall be provided, and installed on the condensate pan to prevent condensate from overflowing.

6. Electrical:

   a. The indoor unit electrical power shall be 208 / 230 volts, 1-phase, 60 hertz.
   b. The system shall be equipped with A-Control – a system allowing each indoor unit to be powered and controlled directly from the outdoor unit using a 14 gauge (AWG) 3-wire connection plus ground providing both primary power and integrated, by-directional, digital control signal without additional connections.
   c. The indoor units shall not have any supplemental or “back-up” electrical heating elements.

7. Control:

   a. The unit shall have a wireless handheld controller to perform input functions necessary to operate the system.
   b. The wireless handheld controller shall have a Power On/Off switch, Mode Selector – Cool, Dry, Heat, Auto Modes - Temperature Setting, Timer Control, Fan Speed Select and Auto Vane selector.
   c. The indoor unit shall perform Self-diagnostic Function and Check Mode switching.
   d. Temperature changes shall be by 1ºF increments with a range of 61 - 88ºF.
   e. The microprocessor located in the indoor unit shall have the capability of sensing return air temperature and indoor coil temperature, receiving and processing commands from the wireless or a wired controller, providing emergency operation and controlling the outdoor unit.
   f. The system shall be capable of automatically restarting and operating at the previously selected conditions when the power is restored after power interruption.
   g. Control system shall control the continued operation of the air sweep louvers, as well as provide On/Off, System/Mode function.
   h. The indoor unit shall have the option of either a wireless or wired wall mounted remote controller to be ordered separately:

   i. Wired Remote Controller

      1) The Wired Remote Controller shall require a terminal interface for communications. Interface will be mounted at the indoor unit. A two (2) conductor, stranded, 22 AWG twisted pair, jacketed; cable shall connect the interface to the wall controller. Connection shall not be polarity sensitive and controller wire shall not exceed thirty-three (33) feet (10m) length.
      2) The wired remote controller shall be approximately 5” x 5” in size and white in color with a light-green LCD display. The controller shall support a selection from multiple languages for display information. There shall be a built-in weekly timer with up to 8 pattern settings per day. The controller shall consist of an On/Off button, Increase/Decrease Set Temperature buttons, a Cool/Auto/Fan/Dry mode selector, a Timer Menu button, a Timer On/Off button, Set Time buttons, a Fan Speed selector, a Ventilation button, a Test Run button, and a Check Mode button. The controller shall have a built-in temperature sensor. Temperature shall be displayed in either Fahrenheit (°F) or Celsius (°C), and Temperature changes shall be by increments of 1°F (0.5°C). The controller shall have the capability of controlling up to a maximum of 16 systems, as a group with the same mode

and set-point for all, at a maximum developed control cable distance of 1,500 feet.

C. Wired, Wall-Mounted Simple MA Remote Controller (PAC-YT53CRAU)

1. User defined functions:

   a. ON/OFF
   b. Operation mode: Auto, Cool, Heat, Fan, or Drying
   c. Set temperature
   d. Fan speed setting
   e. Air flow direction
   f. Set temperature range: 40˚F - 95˚F depending on operation mode and indoor unit connected.
2. Set temperature range limit: Simple MA allowable set temperature range can be reduced for cool and heat modes.
3. Room temperature can be sensed either at the indoor unit (default) or at the remote controller.
4. Wiring: Uses two-wire, stranded, non-polar control wire for connecting to the indoor unit or control adapter.
5. Requires crossover wiring for grouping across indoor units.
6. Dimensions: 2-3/4 x 9/16 x 4-3/4".

2.3 OUTDOOR UNIT SUPPORT STANDS

A. Provide for systems that provide year round operation.

B. Quick-Sling Model QSMS, or approved equal.

1. 14 gauge square steel tubing powder coated for outdoor use.
2. 24” height; sized to match the condensing unit, adjustable.
3. Each foot shall be 6”x6” 11 gauge steel, adjustable up to 1.25” in height. Provide four (4) 3/8” holes, bolt the unit to the subsurface support. Securely fasten to roof sleepers with corrosion resistant fasteners.
4. Adjustable in height up to 1.25"
5. 50 durometer pads on each foot
6. Max capacity 400 lbs.
7. 4 points of anti-vibration isolation washers
8. 2 additional support arms included
9. Provide all required hardware.

2.4 ACCESSORIES

A. Units need to provide year-round HVAC in a cold climate. Provide all available snow hoods (intakes and exhaust), wind baffles, base pan heaters, support stands, and other accessories.
   1. H2i heat pumps shall have 100% heating capacity at -5° and 70% to 81% heating capacity at -13° F

B. Provide hail guards.

C. 3-pole disconnect switch (fits 2x4 utility), white finish.

D. Units without built-in condensate pumps, provide as indicated: MaxiBlue Advanced Blue Diamond Mini Condensate Pump w/ Reservoir & Sensor.

E. Heavy duty wall mounting bracket or 24” high support-stand as indicated; Mitsubishi, Quick-Sling, or approved equal.

1. Steel tubing powder coated for outdoor use.
2. Each foot shall be 6”x6” 11 gauge steel, adjustable up to 1.25” in height. Provide four (4) 3/8” holes, bolt the unit to the subsurface support. Securely fasten with corrosion resistant fasteners. Adjustable in height up to 1.25"; 50 durometer pads on each foot
3. Provide all required hardware.

2.5 LINE SETS

A. Pre-insulated pipes: Mitsubishi, “Gelcopper”, Streamline Duraguard; or approved equal.

B. Polyethylene closed cell foam assures thermal insulation from surroundings.

1. ASTM C 1427-07 compliant
2. Type I (tubular)
3. Grade I (insulation material for use on typical commercial system non-crosslinked).
4. Low-density polyethylene foam: closed cells foam, CFC and HCFC gas free
5. Water vapor permeability: ASTM E96-00 compliant
6. Working temperature: ASTM C 1427-07 compliant
7. Wall thickness: 1/2" and 3/4”
8. Surface burning characteristics: UL 94, top rated – UL 723,
9. ASTM E84 (25/50) compliant, flame and Spread Index less than 25 and Smoke Development Index less than 50 as tested according to UL 723.
10. R-Value: between 6.0 and 3.0 (depending on pipe diameter)

C. Copper: Manufactured according to ASTM B280; No. C122200 DHP (phosphorous deoxidized, high residual phosphorous), 99.90%. R410a approved.

D. Outer Jacket: Additional white polyethylene jacket cover protects foam insulation from tearing during installation process. Marking: insulation incrementally marked by every foot to ensure accurate initial unit charge. UV resistant. Paintable: The insulation can be painted to match the surroundings.

PART 3 - EXECUTION

3.1 INSTALLATION

A. Provide units level and plumb.

B. Provide evaporator-fan components using manufacturer's standard mounting devices securely fastened to building structure.

C. Provide ground-mounting, condensing unit components on 4-inch- thick, reinforced concrete base; 4 inches larger on each side than unit. Concrete, reinforcement, and formwork are specified in Division 3. Coordinate anchor installation with concrete base.

D. Anchor units to supports with removable, cadmium-plated fasteners.

E. Provide and connect pre-charged refrigerant tubing to component's quick-connect fittings. Provide tubing to allow access to unit.

3.2 CONNECTIONS

A. Piping installation requirements are specified in other Division 23 Sections. Drawings indicate general arrangement of piping, fittings, and specialties.

B. Provide piping adjacent to unit to allow service and maintenance.

C. Coordinate locations of indoor units with structure, ceiling grid, and other trades – must maintain heat pump manufacturer’s recommended service clearances.

D. Provide insulated refrigerant piping per heat pump manufacturer’s recommendations. Provide and connect pre-charged refrigerant tubing to component's quick-connect fittings. Provide tubing to allow access to unit. Test and inspect refrigerant piping according to ASME B31.5, Chapter VI.

E. Route indoor unit condensate drains to sink traps, floor drains, plumbing code compliant, or other locations as indicated.

F. Electrical Connections: Comply with requirements in Electrical Specification Sections for power wiring, switches, and motor controls.

3.3 FIELD QUALITY CONTROL

A. Manufacturer's Field Service: Engage a factory-authorized service representative to inspect, test, and adjust field-assembled components and equipment installation, including connections. Report results in writing.

B. Perform the following field tests and inspections and prepare test reports:

1. Leak Test: After installation, charge system and test for leaks. Repair leaks and retest until no leaks exist.
2. Operational Test: After electrical circuitry has been energized, start units to confirm proper motor rotation and unit operation.
3. Test and adjust controls and safeties. Replace damaged and malfunctioning controls and equipment.

C. Remove and replace malfunctioning units and retest as specified above.

3.4 STARTUP SERVICE

A. Engage a factory-authorized service representative to perform startup service. Complete installation and startup checks according to manufacturer's written instructions.

3.5 DEMONSTRATION

A. Engage a factory-authorized service representative to train Owner's maintenance personnel to adjust, operate, and maintain units.

B. Refer to Division 1 for further requirements.

END OF SECTION

SECTION 23 82 39 - UNIT HEATERS

PART 1 - GENERAL

1.1 RELATED DOCUMENTS

A. Drawings and general provisions of the Contract, including General and Supplementary Conditions and Division 1 Specification Sections, apply to this Section.

B. Related Sections include the following: Division 23 Section “Common Work Results”

1.2 SUMMARY

A. This Section includes hydronic unit heaters.

1.3 SUBMITTALS

A. Product Data: Include specialties and accessories for each unit type and configuration.

1. Plans, elevations, sections, and details.
2. Power, signal, and control wiring diagrams. Differentiate between manufacturer-installed and field-installed wiring.
3. Equipment schedules to include rated capacities; shipping, installed, and operating weights; furnished specialties; and accessories.
4. Cabinet Unit Heater color samples for initial selection: Manufacturer's color charts showing the full range of colors available for units with factory-applied color finishes.

B. Maintenance Data: For unit heaters to include in maintenance manuals specified in Division 1. Include maintenance schedules and repair parts lists for motors, coils, integral controls, and filters.

1.4 QUALITY ASSURANCE

A. Electrical Components, Devices, and Accessories: Listed and labeled as defined in NFPA 70, Article 100, by a testing agency acceptable to authorities having jurisdiction, and marked for intended use.

B. Test unit heater coils according to ASHRAE 33.

1.5 COORDINATION

A. Coordinate layout and installation of unit heaters and suspension system components

B. Coordinate wall construction and conditions with recessed or semi-recessed cabinet unit heater installation requirements.

1.6 EXTRA MATERIALS

A. Furnish extra materials described below that match products installed and that are packaged with protective covering for storage and identified with labels describing contents.

1. Cabinet Unit Heater Filters: Furnish one set of spare filter for each filter installed.

PART 2 - PRODUCTS

2.1 MANUFACTURERS

A. Manufacturers: Subject to compliance with requirements, provide products by one of the following:

1. Carrier Corp.
2. Trane
3. McQuay
4. Sterling
5. Vulcan
6. Modine
7. Rittling

2.2 COMMON ELEMENTS

A. Motors shall be brushless DC (BLDC)/electronically commutated motors (ECM) factory-programmed and run-tested in assembled units. The motor controller shall be mounted in a touch-safe control box with a built-in integrated user interface and LED tachometer. If adjustments are needed, motor parameters can be adjusted through momentary contact switches accessible without factory service personnel on the motor control board. Motors shall soft-ramp between speeds to lessen the acoustics due to sudden speed changes. Motors shall be operated at three speeds. The motor will choose the highest speed if there are simultaneous/conflicting speed requests. Motors shall have integral thermal overload protection with a maximum ambient operating temperature of 104°F and shall be permanently lubricated. Motors shall be capable of starting at 50 percent of rated voltage and operating at 90 percent of rated voltage on all speed settings. Motors shall operate up to 10 percent over voltage.

B. Provide a unit-mounted disconnect switch.

2.3 CABINET UNIT HEATERS

A. Description: An assembly including filter, chassis, coil, fan, and motor in blow-through configuration with heating coil.

B. Cabinet: Provide configuration as scheduled.

C. Chassis: Galvanized steel, with flanged edges.

D. Coil Section Insulation: 1-inch duct liner complying with ASTM C 1071 and attached with adhesive complying with ASTM C 916. Fire-Hazard Classification: Duct liner and adhesive shall have a maximum flame-spread rating of 25 and smoke-developed rating of 50 when tested according to ASTM E 84.

E. Cabinet: Galvanized steel, with removable panels.

F. Cabinet Finish: Cabinet parts and exposed recessed panels shall be cleaned, bonderized, phosphatized, and painted with a baked powder finish available in six colors. Finish shall meet ASTM B117 specifications (salt spray test).

G. Hot-Water Coil: Copper tube, with mechanically bonded aluminum fins spaced no closer than 0.1 inch and with manual air vent. Coils shall be rated for a minimum working pressure of 300 psig and a maximum entering water temperature of 275 deg F, with manual air vent.

H. Filters: 1-inch- thick, pleated glass-fiber media in fiberboard frame, Farr 30/30 Pleated Panel Air Filter or equivalent.

I. Fan: Centrifugal, with forward-curved, double-width wheels and fan scrolls made of galvanized steel or thermoplastic material; directly connected to motor.

J. Accessories

1. Steel recessing flanges for recessing cabinet unit heaters into ceiling or wall.
2. Tamperproof locks.
3. Leveling feet for vertical floor mounted cabinet unit heaters.
4. Suspend from structure with rubber-in-shear vibration isolators.

2.4 UNIT HEATERS

A. Description: An assembly including casing, coil, fan, and motor; provide horizontal or vertical configuration as scheduled.

B. Casing: Galvanized steel, with removable panels.

C. Cabinet Finish: Bonderize, phosphatized, and flow-coat with baked-on primer and manufacturer's standard paint applied to factory-assembled and -tested propeller unit heater before shipping.

D. Hot-Water Coil: Copper tube, 0.031-inch wall thickness, with mechanically bonded aluminum fins spaced no closer than 0.1 inch and rated for a minimum working pressure of 200 psig and a maximum entering water temperature of 325°F, with manual air vent. Test for leaks to 375 psig underwater.

E. Propeller with aluminum blades directly connected to motor.

F. Units mounted shall be equipped with an OSHA fan guard. Fan guards shall be welded steel, zinc plated or painted.

PART 3 - EXECUTION

3.1 EXAMINATION

A. Examine areas to unit heaters for compliance with requirements for installation tolerances and other conditions affecting performance.

B. Examine roughing-in for piping and electrical connections to verify actual locations before cabinet unit heater installation.

C. Proceed with installation only after unsatisfactory conditions have been corrected.

3.2 INSTALLATION

A. Provide unit heaters level and plumb.

B. Provide unit heaters to comply with NFPA 90A.

C. Hung unit heaters shall be suspended from structure with rubber-in-shear vibration isolators.

3.3 CONNECTIONS

A. Piping installation requirements are specified in other Division 23 Sections. Drawings indicate general arrangement of piping, fittings, and specialties.

B. Unless otherwise indicated, install shutoff valve and union or flange at each connection.

C. Provide piping adjacent to machine to allow service and maintenance.

3.4 FIELD QUALITY CONTROL

A. Testing: Perform the following field quality-control testing and report results in writing:

1. After electrical circuitry has been energized, start units to confirm proper motor rotation and unit operation.
2. Test and adjust controls and safeties.

B. Repair or replace malfunctioning units. Retest as specified above after repairs or replacements are made.

3.5 CLEANING

A. After installing units, inspect unit cabinet for damage to finish. Remove paint splatters and other spots, dirt, and debris. Repair damaged finish to match original finish.

B. After installing units, clean unit heaters internally according to manufacturers written instructions.

C. Provide new filters in each cabinet unit heater within two weeks after Substantial Completion.

END OF SECTION

SECTION 23 84 13 - HUMIDIFIERS

PART 1 - GENERAL

1.1 RELATED DOCUMENTS

A. Drawings and general provisions of the Contract, including General and Supplementary Conditions and Division 01 Specification Sections, apply to this Section.

1.2 SUMMARY

A. This Section includes humidifiers and humidification piping.

1.3 ACTION SUBMITTALS

A. Product Data: Include rated capacities, operating characteristics, furnished specialties, and accessories.

1.4 CLOSEOUT SUBMITTALS

A. Operation and Maintenance Data: For humidifiers to include in operation and maintenance manuals.

1.5 QUALITY ASSURANCE

A. Electrical Components, Devices, and Accessories: Listed and labeled as defined in NFPA 70, Article 100, by a testing agency acceptable to authorities having jurisdiction, and marked for intended use.

B. Comply with ARI 640, "Commercial and Industrial Humidifiers."

1.6 COORDINATION

A. Coordinate location and installation of humidifiers with manifolds in ducts and air-handling units or occupied space. Revise locations and elevations to suit field conditions and to ensure proper humidifier operation.

PART 2 - PRODUCTS

2.1 HUMIDIFIERS

A. Manufacturers: Subject to compliance with requirements, provide products by one of the following:

1. DriSteem
2. Armstrong International, Inc.
3. Herrmidifier.

B. Humidifier shall be a DriSteem Vaporstream Electric Evaporative Steam Humidification System.

C. Fabrication requirements:

1. Tank and cover: 304-stainless steel with Heli-arc welded seams
2. Quick removable cover with threaded knobs and gasketed flanges
3. Heater cover interlock safety switch: A factory-mounted and wired interlock safety switch shall de-energize the heaters when the heater cover is removed.
4. Terminal strip to allow all control wiring connections at the humidifier to be made in a single location
5. Easily accessible cleanout plate
6. Steam outlet on top of tank cover to connect to hose, pipe or flange connection
7. Factory insulation: Humidifier shall be covered with 1"-thick, rigid, foil-faced fiberglass insulation. All surfaces except front face panel and heater terminal cover shall have insulation.

D. Immersion heaters: Heaters shall be Incoloy alloy-sheathed resistance type designed for no more than 86 watts per square inch. Two threaded ends of each heater element shall pass through the top of the evaporating chamber and be secured and sealed with washer and threaded nuts to evaporating chamber.

E. Temperature sensor: A factory mounted sensor, with a temperature range of -40 to 248 °F shall be mounted on the humidifier to enable the following functions:

1. Maintain the evaporating chamber water temperature above freezing
2. Maintain a user-defined preset evaporating chamber water temperature
3. Allow rapid warm-up of water in evaporating chamber after a call for humidity, providing 100% operation until steam production occurs
4. Provide backup over-temperature protection for the over-temperature switch

F. Over-temperature switch: A factory-mounted and wired UL-listed limit control sensor with manual reset shall sense an over-temperature condition and de-energize heater circuit controls.

G. Wall brackets: Humidifier shall have two welded and painted steel wall brackets to support humidifier on a vertical surface.

H. Water requirements: The humidifier shall be capable of generating steam from tap, softened or DI/RO water.

I. Humidifier shall have a stainless steel manually operated drain valve and a stainless steel float operated fill valve.

J. Humidifier shall have a stainless steel electric operated drain valve and a stainless steel float operated fill valve with an electric solenoid to prevent tank from filling when the tank drains automatically at the end of a humidification season.

K. Humidifier Controls

1. Control cabinet: NEMA-12 control cabinet shall be shipped loose. An ETL/C-ETL listed control cabinet assembly comprising control devices shall be mounted on a subpanel. Control devices shall include a Vapor-logic®4 microprocessor control system, a magnetic contactor for each heating stage, a control circuit transformer, a fuse set for each heating stage (for multiple heat stages only), a numbered terminal strip, and all interconnecting wiring. All wiring diagrams shall be included in the control cabinet.
2. Provide 100% SSR modulation control: The humidifier shall have all humidifier heat stages modulating through electronic power controllers, which provide a total 0% to 100% modulation of humidifier output. All SSR controls are mounted and wired through the cabinet door.
3. Vapor-logic microprocessor controller with the following features or functions:

   a. Web interface and server, included standard on all models:

      1) Web interface shall have same functionality as Vapor-logic keypad/display
      2) Web interface shall allow multiple remotely located users to simultaneously view system operation and/or change system parameters.
      3) Web interface shall have password-protected secure access.
      4) Web interface shall be compatible with standard Internet browsers.
      5) Web interface shall connect directly to a personal computer or through a system network via Ethernet cable. Automatic cable configuration shall allow straight-through or crossover cables.

   b. Interoperable with a BACnet network for integration with Honeywell EBI.
   c. Redundant over-temperature safety control
   d. Fully modulating (0% to100%) control of humidifier outputs
   e. PID control capability with field-adjustable settings
   f. Water level control for DI/RO water:

      1) System shall provide for continuous control of water level and will accommodate the use of deionized or reverse osmosis water with resistance up to 18 M-ohm/cm.
      2) System shall:
      3) Have a water level sensing unit comprised of a float operated stainless steel valve for water makeup
      4) Have a low water cutoff float switch
      5) Operate within inlet water pressure range of 25 to 80 psi

   g. Temperature sensor: A factory mounted sensor, with a temperature range of -40 to 248 °F mounted on the humidifier to enable the following functions:

1) Maintain the evaporating chamber water temperature above freezing
2) Maintain a user-defined preset evaporating chamber water temperature
3) Allow rapid warm-up of water in evaporating chamber after a call for humidity, providing 100% operation until steam production occurs

h. USB port on the control board for software updates, data backups, and data restoration
i. Up-time optimizer function to keep humidifier(s) operating through conditions such as fill, drain, or run-time faults, as long as safety conditions are met, minimizing production down-time
j. Real-time clock to allow time-stamped alarm/message tracking, and scheduled events
k. Factory commissioning of humidifier and control board, including system configuration as-ordered
l. Keypad/display operable within a temperature range of 32 to 158 °F (0 to 70 °C), and that provides backlighting for viewing in low light
m. Alarms, unit configuration, and usage timer values shall remain in nonvolatile memory indefinitely during a power outage.
n. The capability to monitor, control, and/or adjust the following parameters:

1) Relative humidity (RH) set point, actual conditions in the space (from humidity transmitter), RH offset
2) Dew point set point, actual conditions in the space (from dew point transmitter), dew point offset
3) Relative humidity (RH) duct high limit set point (switch) and actual conditions
4) Relative humidity (RH) duct high limit set point, actual conditions (from transmitter), high limit span, and high limit offset
5) Total system demand in % of humidifier capacity
6) Total system output in lbs/hour (kg/h)
7) Drain/flush duration
8) End-of-season drain status and hours humidifier is idle before end of season draining occurs
9) System alarms and system messages, current and previous
10) Adjustable water skim duration
11) Programmable outputs for remote signaling of alarms and/or messages, device activation (such as a fan), or for signaling tank heating and/or steam production.
12) System diagnostics that include:

a) Test outputs function to verify component operation
b) Test humidifier function, by simulating demand to validate performance
c) Data collection of RH, air temperature, water use, energy use, alarms, and service messages for viewing from the keypad/display or Web interface

13) Service notification scheduling
14) Password-protected system parameters

15) Keypad/display or Web interface displays in English, French, or German languages
16) Numerical units displayed in inch-pound or SI units

4. Cabinet door interlock switch: The control cabinet shall have an interlock control switch with manual override to remove control voltage when door is opened.

L. Steam Dispersion Panel:

1. DriSteem UltraSorb factory-assembled steam dispersion panel shall include the following components:

   a. Steam supply header/separator
   b. Condensate collection header
   c. Closely-spaced stainless steel steam dispersion tubes spanning the distance between the two headers

2. Each dispersion tube shall be fitted with two rows of steam discharge tubelets inserted into the tube wall, centered on the diametric line, and spaced 1-1/2" apart. Each tubelet shall be made of a thermal-resin material designed for high steam temperatures. The two rows of tubelets in each dispersion tube shall discharge steam in diametrically opposite directions, perpendicular to airflow.
3. Each tubelet shall extend through the wall of and into the center of the dispersion tube and contain a steam orifice sized for its required steam capacity.
4. The humidifier shall provide absorption characteristics as scheduled.
5. Each packaged humidifier panel assembly of tubes and headers shall be contained within a 316 stainless steel casing to allow convenient duct mounting, or to facilitate the end-to-end mounting of multiple humidifier panels in ducts or air handler casings. When so designated, the humidifier panel shall be shipped unassembled.
6. All tubes and headers shall be 316 stainless steel and be Heli-arc welded.
7. Tubes shall be joined to headers with slip-fit couplings.

M. Accessories:
1. Humidistat: Wall-mounting, solid-state, electronic-sensor controller capable of full modulation or cycling control.
2. Duct-mounting, high-limit humidistat.
3. Airflow switch for preventing humidifier operation without airflow.
4. Steam and Condensate Hoses: For interconnection of humidifier to distributer tube(s)/manifold.

N. Provide a condensate drain cooler for each humidifier: Mixes hot condensate with a cold water supply to reduce the drain temperature as required by state and local codes.

1. Cold Water Tempering Valve: Bronze body.
2. Drain Temperature Set-Point Range: Field adjustable between 115°F and 140° F. Drain sensor to control cold water tempering valve to limit drain discharge temperature to set point.
3. Reservoir Body Material: Stainless steel.
4. Mounting: Suitable for wall or floor mounting.
5. Vacuum breaker or air vent connection.

6. Condensate drain cooler built into the humidifier cabinet and offered as the humidifier manufacturer's standard product is acceptable in lieu of a separate product by the listed manufacturers.

2.2 HUMIDIFIER PIPING

A. Drain and vent: Type DWV, drawn-temper copper tubing, wrought-copper fittings, and soldered joints.

B. Join dissimilar pipe materials with transition fittings compatible with pipe materials being joined.

PART 3 - EXECUTION

3.1 EXAMINATION

A. Examine ducts, air-handling units, and conditions for compliance with requirements for installation tolerances and other conditions affecting performance.

B. Examine roughing-in for piping systems to verify actual locations of piping connections before humidifier installation.

C. Proceed with installation only after unsatisfactory conditions have been corrected.

3.2 INSTALLATION

A. Install humidifiers with required clearance for service and maintenance.

B. Seal humidifier manifold duct or plenum penetrations with flange.

C. Provide installation in ductwork in accordance with 233113. Maintain path, downstream from humidifiers, clear of obstructions as required by ASHRAE 62.1.

D. Install manifold supply piping pitched to drain condensate back to humidifier.

E. Equipment Mounting: Provide wall support. Provide extra studs and blocking per humidifier manufacturer’s instructions.

3.3 CONNECTIONS

A. Piping installation requirements are specified in other Sections. Drawings indicate general arrangement of piping, fittings, and specialties.

1. Install piping adjacent to humidifiers to allow service and maintenance.
2. Install shutoff valve, strainer, RPZ backflow preventer, and union in makeup line.

B. Support steam hose to prevent sags or low spots, and pitch at least 2"/ft (15%) back to the humidifier.

C. Install electrical devices and piping specialties furnished by manufacturer but not factory mounted. Ground equipment and provide wiring according to Division 26.

3.4 FIELD QUALITY CONTROL

A. Manufacturer's Field Service: Engage a factory-authorized service representative to inspect, test, and adjust components, assemblies, and equipment installations, including connections. Report results in writing.

B. The complete pre-treatment and RO system shall be fully commissioned by factory-trained technicians. Commissioning of softener systems shall be coordinated with commissioning of the building automation system.

C. Tests and Inspections:

1. Leak Test: After installation, charge system and test for leaks. Repair leaks and retest until no leaks exist.
2. Operational Test: After electrical circuitry has been energized, start units to confirm proper motor rotation and unit operation.
3. Test and adjust controls and safeties. Replace damaged and malfunctioning controls and equipment.

D. Remove and replace malfunctioning units and retest as specified above.

E. Test piping for leaks and defects.

1. Schedule tests and their inspections by Owner, with at least 24 hours' advance notice.
2. Do not cover piping or put into service before inspection and approval.
3. Test completed piping according to authorities having jurisdiction. If authorities having jurisdiction do not have published procedures, perform tests as follows:

    a. Hydrostatic Tests: Test piping at pressure not less than 1-1/2 times the maximum system operating pressure, but not less than 100 psig.

4. Replace leaking joints with new materials and retest until no leaks exist.
5. Submit separate reports for each test.

3.5 DEMONSTRATION

A. Engage a factory-authorized service representative to train Owner's maintenance personnel to adjust, operate, and maintain humidifiers. Refer to Section 01 79 00 "Demonstration and Training."

END OF SECTION

SECTION 26 10 00 - BASIC ELECTRICAL REQUIREMENTS

PART 1 - GENERAL

1.1 RELATED DOCUMENTS

A. Drawings and general provisions of the Contract, including General and Supplementary Conditions and Division 01 Specification Sections, apply to this Section.

1.2 SUMMARY

A. Alternates: Refer to Division 01 to determine extent of, if any, work of this section that will be affected by any alternates if accepted.

B. Furnish all materials, equipment, labor, and supplies and perform all operations necessary to complete the electrical work in accordance with the intent of the drawings and these specifications.

C. Temporary Power and Lighting: Provide separate meter and service for construction area.

1. Power Distribution: Provide weatherproof, grounded circuits with ground-fault interruption features, with proper power characteristics and either permanently wired or plug-in connections as appropriate for intended use. Provide overload-protected disconnect switch for each circuit at distribution panel. Space 4-gang convenience outlets (20 amp circuit) so that every portion of work can be reached with 100' extension cord.
2. Temporary Lighting: Provide lighting of intensity and quality sufficient for proper and safe performance of the work and for access thereto and security thereof. (Consult OSHA requirements.)

1.3 QUALITY ASSURANCE

A. All wiring shall be in accordance with the latest issue of the National Electrical Code.

B. Provide a grounding electrode system for the service entrance. The service equipment shall be grounded at the service entrance switch enclosure. This shall also be the grounding point for the service conduit, boxes, fittings and metal enclosed equipment used in the building wiring system. The grounding electrode system for the service entrance shall include all electrodes specified in Article 250 of the National Electrical Code (NEC) that exist at the facility and made electrodes as specified herein. This resistance shall be tested.

C. Ground Resistance Testing:

1. Measure ground resistance with bridge type meter designed for testing grounds.
2. Record readings, conditions of soil, model of meter, date, and name of tester.
3. Conduct test in presence of Owner or his Representative. The test shall be made no less than 48 hours after a rain.

D. The Contractor shall show evidence, upon request, of having successfully completed at least five similar projects. Installation of each system shall be under the supervision of a factory-authorized organization.

E. The Contractor shall show evidence, upon request, that he maintains a fully equipped service organization capable of furnishing adequate inspection and service to the system. The Contractor must have a service contract program for the maintenance of the system after the guarantee period.

F. All electrical equipment shall be listed by Underwriters Laboratories, Inc. Each system shall be products of a single manufacturer of established reputation and experience. The Contractor shall have supplied similar apparatus to comparable installations rendering satisfactory service for at least three years.

G. For each system, the manufacturer shall furnish "gratis" to the Owner a one-year contract effective from the date of installation for maintenance and inspection services of the manufacturer's equipment with a minimum of two inspections during the contract year.

H. Furnish the services of a competent instructor for not less than one four- hour period for instructing personnel in the operation and maintenance of the closed-circuit television system, on the dates requested by the Owner.

1.4 SYSTEM DESCRIPTION

A. The utility providing service is private campus distribution served by Central Maine Power (CMP)

B. The electrical service and power distribution scope is modifications to the existing building power distribution system as identified on the design plans, diagrams and details.

C. Existing electrical service, meters, utility transformers and primary system shall be maintained

D. Confirm that the existing building electrical service ground is installed and performs in accordance with NEC requirements. Contact engineer of record should performance discrepancies be discovered with the existing electrical service grounding systems so that a remedy can be discussed, reviewed and implemented.

E. Existing stand-by power system and related power distribution equipment serving portions of the building shall be maintained. The stand-by power distribution system is not being utilized or modified as part of this project.

F. Prior to submission for review of any item of equipment, determine whether or not it will fit in the space or equipment identified on the design plans. Any changes in the size or location of the material or equipment supplied, which may be necessary in order to meet field conditions or in order to avoid conflicts between trades, shall be brought to the immediate attention of the Architect/Engineer and approval received before such alterations are made.

1.5 EFFICIENCY MAINE

A. This project intends to pursue Efficient Maine prescriptive and/or custom incentives. The contractor shall be an Efficiency Maine Qualified Partner and shall participate in the activities associated with Efficiency Maine incentive pre-approval and approval process including but not limited to; preparation and submission of required incentive application(s) and the tracking and submission of measure specific invoices to Efficiency Maine within 60 days of the completion of the work.

B. The contractor shall also:

1. Become familiar with the Efficiency Maine Business Program including available incentives and the application and review process.
2. Review plans and specifications for any and all incentive opportunities, prescriptive and custom.

C. The project schedule shall reflect and accommodate the time required to achieve application preapproval from Efficiency Maine. No equipment shall be purchased until preapproval is received from Efficiency Maine.

D. All invoices shall be forwarded to Efficiency Maine in accordance with Efficiency Maine requirements. This deliverable shall be shown on the project schedule as a milestone date and coordinated with all contractors to assure compliance with this requirement.

1.6 FIRE ALARM SYSTEM

A. Provide an automatic, addressable electrically supervised, low-voltage fire alarm system, to be wired, connected and left in first-class operating condition. Fire alarm systems shall generally comply with requirements of NFPA 72 for local building systems except as modified and supplemented by this or the referenced specifications. All units of equipment shall be listed by Underwriters Laboratories and shall consist of a battery-backed fire alarm control station, with audio/visual and visual alarm indicating devices, heat detectors, smoke detectors, and pull stations. All equipment shall be located as shown on the plans and wired in accordance with the manufacturer's instructions to form a complete and workable emergency evacuation life safety system.

B. Refer to specification section 283111 – Digital, Addressable Fire Alarm System

1.7 EMERGENCY RESPONDER RADIO ANTENNA/REPEATER SYSTEM

A. Provide signal strength testing for an Emergency Responder Radio Antenna/Repeater System to serve the facility. Testing shall occur once final finishes have been applied and FFE has been installed. Results of signal strength testing will be shared and reviewed by the fire department for final agreement as to whether the repeater system is required or is not. Should it be determined as a result of the signal strength testing that the antenna/repeater system is required then provide an ADD ALTERNATE price to the owner for system procurement and installation within the base bid project completion schedule.

B. Refer to specification section 283115 – Emergency Responder Radio Antenna Repeater System

1.8 SECUIRTY AND CCTV SYSTEMS

A. Final system design and layout provided by owner's security system consultant

B. Refer to specification section 281500 – Access Control System

1.9 TELECOMMUNICATIONS (design and layout provided by owner's system consultant)

A. Telecommunications work shall be in accordance with Building Industry Consulting Service International (BICSI) standards. Installation shall be under the direct supervision of a BICSI Registered Technician, who shall be present at all times when Work of this Section is performed at Project site. Testing Supervisor shall be currently certified by BICSI as a Registered Communications Distribution Designer (RCDD).

1.10 POWER DISTRIBUTION EQUIPMENT COORIDNATION STUDY AND IDENTIFICATION

A. The work of this section includes arc-flash hazard, fault duty and circuit breaker coordination study to include equipment provided under this project as coordinated with the next existing upstream device. The study utilize EasyPower computed software developed by ESA, Inc or approved equal. The study shall be completed using computer software that is compatible with the existing study if one exists. The study document files (report) shall be provided as a submittal, for review and approval by the engineer of record, prior to procurement any new power distribution equipment; the study results shall be made available to the owner in both electronic and hard copies.

B. Study Specialist Qualifications: Professional engineer in charge of performing the study, analysis, and documenting recommendations, licensed in the state where Project is located. All elements of the study shall be performed under the direct supervision and control of this professional engineer.

C. Comply with NFPA 70E and its Annex D for hazard analysis study.

D. Provide arc-flash hazard warning labels as specified in Part 3 of this section.

1.11 SUBMITTALS

A. In accordance with Division 01, furnish the following:

1. Manufacturer's descriptive literature: For each type of product indicated.
2. Submit shop drawings which include engineering drawings of the system with specification sheets covering all component parts of the system and interconnection diagrams.
3. Submit fire alarm battery calculations.
4. Certification:

a. Prior to final inspection, deliver to the Owner's Representative certification that the material is in accordance with the drawings and specifications and has been properly installed.
b. Submit certification of system operating test.

5. Manuals: Submit copies of complete set of operating instructions including circuit diagrams and other information of system components.

1.12 PROJECT CONDITIONS

A. Regulatory Requirements:

1. Conform to the requirements of all laws and regulations applicable to the work.
2. Cooperate with all authorities having jurisdiction.
3. Compliance with laws and regulations governing the work on this project does not relieve the Contractor from compliance with more restrictive requirements contained in these specifications.
4. If the Contract Documents are found to be at variance with any law or regulation, the Contractor shall notify the Architect/Engineer promptly in writing. The Contractor shall assume full responsibility for any work contrary to law or regulation, and shall bear all costs for the corrections thereof.
5. Minimum Requirements: The National Electrical Code (NEC), Underwriters Laboratories, Inc. (UL), the National Fire Codes, and National Fire Protection Association (NFPA) are a minimum requirement for work under this section. Design drawings and other specification sections shall govern in those instances where requirements are greater than those required by code.

B. Permits, Fees, and Inspections:

1. Secure and pay for all permits, fees, licenses, inspections, etc., required for the work under Division 26.
2. Schedule and pay for all legally required inspections and cooperate with inspecting officers.
3. Provide Certificates of Inspection and Approval from all regulatory authorities having jurisdiction over the work in Division 26.

C. Drawings:

1. Do not scale the drawings. The general location of the apparatus and the details of the work are shown on the drawings, which form a part of this specification. Exact locations are to be determined at the building as the work progresses, and shall be subject to the Architect/Engineer's approval. Actual field conditions shall govern all dimensions.
2. Anything shown on the drawings and not mentioned in the specifications or vice versa shall be provided as if it were both shown and specified.
3. It is not intended that the drawings shall show every new or scheduled for removal wire, device, fitting, conduit or appliance, but it shall be a requirement to furnish without additional expense, all material and labor necessary to complete the systems in accordance with applicable codes and the best practice of the trade.

1.13 WARRANTY

A. The Contractor shall guarantee all equipment and wiring free from inherent mechanical or electrical defects for one year from date of acceptance.

1.14 RELATED WORK

A. Division 21 – Fire Protection

B. Division 22 - Plumbing

C. Division 23 - Mechanical

PART 2 - PRODUCTS

2.1 MATERIALS

A. Switches

1. Toggle Switches: 20A, 277V, 1-pole, ivory specification grade, mount 4'-0" above finished floor at door entrance.
2. Push-Button Switches: Modular, momentary-contact, low-voltage type connected to lighting control panels. Use for all permanently installed luminaires unless otherwise noted. Mount 4'-0" above finished floor at door entrance.

B. Switchbox type occupancy sensors: Adaptive-technology type, 120/277 V, adjustable time delay up to 20 minutes, 180-degree field of view, with a minimum coverage area of 900 sq. ft. Configure for manual-on/automatic-off operation.

C. Indoor Occupancy Sensors

1. General Description: Wall- or ceiling-mounting, solid-state units with a separate relay unit.

a. Operation: Unless otherwise indicated, turn lights on when covered area is occupied and off when unoccupied; with a time delay for turning lights off, adjustable over a minimum range of 1 to 15 minutes.
b. Sensor Output: Contacts rated to operate the connected relay, complying with UL 773A. Sensor shall be powered from the relay unit.
c. Relay Unit: Dry contacts rated for 20-A ballast load at 120- and 277-V ac, for 13-A tungsten at 120-V ac, and for 1 hp at 120-V ac. Power supply to sensor shall be 24-V dc, 150-mA, Class 2 power source as defined by NFPA 70.
d. Mounting:

1) Sensor: Suitable for mounting in any position on a standard outlet box.
2) Relay: Externally mounted through a 1/2-inch knockout in a standard electrical enclosure.
3) Time-Delay and Sensitivity Adjustments: Recessed and concealed behind hinged door.

e. Indicator: LED, to show when motion is being detected during testing and normal operation of the sensor.
f. Bypass Switch: Override the on function in case of sensor failure.
g. Automatic Light-Level Sensor: Adjustable from 2 to 200 fc; keep lighting off when selected lighting level is present.

2. Dual-Technology Type: Ceiling mounting; detect occupancy by using a combination of PIR and ultrasonic detection methods in area of coverage. Particular technology or combination of technologies that controls on-off functions shall be selectable in the field by operating controls on unit.

    a. Sensitivity Adjustment: Separate for each sensing technology.
    b. Detector Sensitivity: Detect occurrences of 6-inch-minimum movement of any portion of a human body that presents a target of not less than 36 sq. in., and detect a person of average size and weight moving not less than 12 inches in either a horizontal or a vertical manner at an approximate speed of 12 inches/s.
    c. Detection Coverage (Standard Room): Detect occupancy anywhere within a circular area of 1000 sq. ft. when mounted on a 96-inch-high ceiling.

D. Receptacles shall be specification grade, mounted 18" above finished floor unless otherwise noted.

1. Provide type TR tamper-resistant where required by code.
2. Provide type WR weather-resistant where required by code.

E. Duplex Receptacles With Ground-Fault Interrupter shall be an integral unit suitable for mounting in a standard outlet box.

1. Ground-Fault Interrupter shall consist of a differential current transformer, solid state sensing circuitry and a circuit interrupter switch. It shall be rated for operation on a 60 Hz, 120-volt, 20-ampere branch circuit. Device shall have nominal sensitivity to ground leakage current of five milliamperes and shall function to interrupt the current supply for any value of ground leakage current above five milliamperes on the load side of the device. Device shall have a minimum nominal tripping time of 1/30th of a second.
2. Receptacle shall be rated 20 amperes, 125 volts for indoor use and shall be the standard duplex, three-wire, grounding type.
3. Provide type WR weather-resistant where required by code.

F. Weatherproof Receptacles shall consist of a duplex GFI receptacle, as specified, mounted in a weatherproof box with a gasketed, weatherproof, cast metal cover plate. The weatherproof integrity shall not be affected when heavy duty specification or hospital grade attachment plug caps are inserted. Cover plates on outlet boxes mounted flush in the wall shall be gasketed to the wall in a watertight manner.

G. Plates shall be 302 stainless steel with tamper-proof screws.

H. Boxes shall be steel minimum 2-1/2" deep.

I. Light Fixtures: The light fixtures shall be as described on the drawings or approved equal.

J. Disconnect Switches shall be heavy-duty type, horsepower rated.

K. Motor Starters:

1. Manual motor starters shall be toggle-switch type with melting alloy thermal overload relay. Thermal units shall be one-piece construction and interchangeable. Starter shall be inoperative with thermal unit removed. Contacts shall be double break, silver alloy.

Starters in finished areas shall be flush mounted over the light switch at 60" above finished floor. Starters shall be mounted behind stainless steel device plate and shall have adjacent pilot lights. Square D Class 2510 Type FS-1P-FL1 or approved equal. Starters in unfinished areas shall be surface mounted 60" above finished floor. Square D Class 2510 Type FG-5P or approved equal.

2. Magnetic motor starters shall be combination circuit breaker or fused disconnect switch type, mounted in a common enclosure. Starters shall be three-pole with three melting alloy overload relays. Overload heaters shall be coordinated with Division 23. Thermal units shall be of one-piece construction and interchangeable. Starter shall be inoperative with any thermal unit removed. The disconnect operating handle shall be position indicating.

    a. Provide a control device and pilot light on the cover of each combination starter. Control devices for motors with remote manual or automatic control shall be "hand-off-auto" switches. Control devices for locally controlled motors shall be "start-stop" pushbuttons.
    b. 120-volt magnetic motor starters may consist of a circuit breaker or fused disconnect switch and a magnetic starter in separate enclosures mounted next to each other.
    c. Control circuits shall operate at a maximum of 120 volts. Provide control transformers as required.

3. Starters shall be mounted within NEMA-1 enclosures unless specified otherwise.
4. All starters shall be lockable in the "off" position.
5. Overload heaters shall be sized for the motor nameplate full-load amperes per the manufacturer's recommendations.

L. Wiring Materials:

1. Wiring shall be enclosed in electrical rigid galvanized steel, intermediate metal conduit, or electrical metallic tubing sized in accordance with code requirements for the conductors. Types MC or NM cable may be used where concealed in walls or ceilings and allowed by code.

    a. Conduit fittings shall be steel compression type.
    b. Terminations for all conduit shall have insulated bushings or insulated throat connectors in accordance with code requirements.
    c. All conduits shall be substantially supported with approved clips or hangers spaced not to exceed ten feet on center. Minimum conduit size shall be 1/2".

2. Surface Metal Raceway: UL 5 listed.

    a. Boxes and fittings for surface metal raceways shall be as recommended by the manufacturer.
    b. Support clips for surface metal raceways shall be the concealed type, with attachment screws concealed behind the raceway.

3. Flexible Metal Conduit shall be used for all connections to motors and vibrating equipment and shall comply with Fed. Spec. WW-C-566.
4. Liquid-Tight Flexible Metal Conduit shall consist of flexible steel conduit with a liquid-tight PVC jacket over the conduit.

a. Fittings shall incorporate a threaded grounding cone, a steel or plastic compression ring, and a gland for tightening.
b. Liquid-tight flexible metal conduit shall be used in damp or wet locations when flexible metal conduit would otherwise be used.
c. Liquid-tight flexible metal conduit shall not penetrate the roof or exterior walls, and shall not be installed in lengths exceeding 72” except where necessary for flexibility.

5. Nonmetallic Conduit: Fed. Spec. W-C-1094, Type II or Type III shall apply. Conduit shall be Schedule 40 heavy wall PVC or high density PE. Conduit shall be UL listed for use above ground and direct burial underground and be sunlight resistant.
6. All Wiring shall be type THW, XHHW, or THWN, UL labeled, copper conductors with 600-volt insulation, except as otherwise noted. Minimum size wire shall be No. 12 AWG.
7. Nonmetallic-Sheathed Cable (Type NM) shall be two-or three-conductor with a ground conductor and an overall covering that is flame-retardant and moisture-resistant. Minimum wire size shall be No. 12 AWG.
8. Type MC Cable shall have minimum No. 12 AWG type THWN or XHHW insulated copper conductors with an internal bare or insulated copper ground wire.
9. Fire Alarm Wiring: Wiring shall be in accordance with NEC Article 760, as shown on the drawings, and as recommended by the manufacturer of the fire alarm system. All wires shall be color-coded and installed in metal conduit. Conduit fill shall not exceed 40 percent of interior cross sectional area. Number and size of conductors shall be as recommended by the fire alarm system manufacturer. Conduit shall be 1/2" minimum.

M. Fire-Stop Material:

1. Fire-stopping material shall maintain its dimension and integrity while preventing the passage of flame, smoke, and gases under conditions of installation and use when exposed to the ASTM E 119 time-temperature curve for a time period equivalent to the rating of the assembly penetrated. Cotton waste shall not ignite when placed in contact with the non-fire side during the test. Fire-stopping material shall be noncombustible as defined by ASTM E 136; and in addition for insulation materials, melt point shall be a minimum of 1700°F for one-hour protection and 1850°F for two-hour protection.
2. Seals for floor, exterior wall, and roof shall also be watertight.

N. Panelboards:

1. Provide standard manufacturer products. All components of panelboards shall be the product and assembly of the same manufacturer. All similar units of all panelboards shall be of the same manufacturer.
2. All panels shall be dead front safety type.
3. All panelboards shall be completely factory assembled with molded case circuit breakers.
4. Panels shall have main breaker or main lugs, bus size, voltage, phase, and flush or surface mounting all as scheduled on the drawings. Panelboards to be used as service equipment shall be listed for such use.
5. Panelboards shall have the following features:

a. Non-reduced size copper or aluminum bus bars and connection straps bolted together and rigidly supported on molded insulators. Bus bar taps shall be arranged for sequence phasing of branch circuit devices.
b. Full size neutral bar mounted on insulated supports.

c. Ground bar with sufficient terminals for all grounding wires. The ground bar shall be insulated and isolated where called for on the drawings.
d. Buses braced for the available short-circuit current, but not less than scheduled and never less than 10,000 amperes symmetrical. All panelboards shall be fully rated. Series rated assemblies are not acceptable.
e. All breakers arranged so that it will be possible to substitute a two-pole breaker for two single pole breakers or a three-pole breaker for three single pole breakers when frame size is 100 amperes or less.
f. Design interior so that protective devices can be replaced without removing adjacent units, main bus connectors and without drilling or tapping.
g. Where designated, on panel schedule as "space", include all necessary bussing, device supports and connections. Provide blank cover for each space.
h. Provide galvanized steel cabinets to house panelboards. Cabinets for panelboards may be factory primed and suitably treated with a corrosion-resisting paint finish meeting UL standard for outdoor applications.
i. Back and sides shall be of one-piece formed steel. Cabinets for panelboards may be of formed sheet steel with end and side panels welded, riveted or bolted as required.
j. Provide minimum of four interior mounted studs and necessary hardware for in and out adjustment of panel interior.
k. Fabricate trim of sheet steel consisting of frame with door attached by concealed hinges. Provide flush or surface trim as shown on the drawings.
l. Surface trim shall have the same width and height as the box.
m. Provide doors with flush type latch and manufacturer's standard lock.
n. In making switching devices accessible, doors shall not uncover any live parts.
o. Provide concealed butt hinges welded to the doors and trims.
p. Provide keyed alike system for all panelboards.
q. Provide a directory card, metal holder, and transparent cover. Permanently mount holders on inside of doors.
r. Circuit breakers in panelboards shall be bolt on type on phase bus bar or branch circuit bar. Molded case circuit breakers shall have automatic, trip free, non-adjustable, inverse time, and instantaneous magnetic trips.

O. Circuit Breakers: Circuit breakers to be added to existing panelboards shall match existing circuit breakers.

P. Grounding Conductors:

1. Grounding conductors shall be soft-drawn bare copper.
2. Insulated grounding wires shall be UL and NEC approved types, copper, with THWN or XHHW insulation color identified green, except where otherwise shown on the drawings or specified.
3. Wire shall not be less than shown on the drawings and not less than required by the NEC.

Q. Ground Rods:

1. Ground rods shall be copperweld steel, 5/8" diameter by ten feet long. Each rod shall be die-stamped near the top with the name or trademark of the manufacturer and the length of the rod.
2. Ground rods shall have hard, clean, smooth, continuous copper jacket surface throughout the length of the rod.

R. Ground Clamps:

1. Ground clamps shall be cast bronze or cast copper and shall be UL listed for grounding connections.
2. Ground clamps shall be sized for the specific conductor and electrode to be clamped.

S. Grounding Connections: Connections shall be of the exothermic type welding process as manufacturer by Caldweld or approved equal.

T. Equipment Grounding Connections: Connections shall be of the compression type solderless connectors.

U. Meter Socket: Provide meter socket approved by the utility to receive the utility's meter.

V. Surge Arrester: 0-650 volt A.C. rating, single phase, 2 pole, G.E. Model No. 9L15ECB001, or equal.

W. Telecommunications (design and layout provided by owner’s system consultant)

1. Performance Requirements

a. General Performance: Horizontal cabling system shall comply with transmission standards in TIA/EIA-568-B.1 when tested according to test procedures of this standard.
b. Surface-Burning Characteristics: Comply with ASTM E 84; testing by a qualified testing agency. Identify products with appropriate markings of applicable testing agency.

1) Flame-Spread Index: 25 or less.
2) Smoke-Developed Index: 50 or less.

c. Grounding: Comply with J-STD-607-A.

2. UTP Cable: 100-ohm, four-pair UTP, formed into 25-pair, binder groups covered with a blue thermoplastic jacket.

a. Comply with ICEA S-90-661 for mechanical properties.
b. Comply with TIA/EIA-568-B.1 for performance specifications.
c. Comply with TIA/EIA-568-B.2, Category 6.
d. Listed and labeled by an NRTL acceptable to authorities having jurisdiction as complying with UL 444 and NFPA 70 for the following types:

1) Communications, Plenum Rated: Type CMP, complying with NFPA 262.

3. UTP Cable Hardware:

a. General Requirements for Cable Connecting Hardware: Comply with TIA/EIA-568-B.2, IDC type, with modules designed for punch-down caps or tools. Cables shall be terminated with connecting hardware of same category or higher.
b. Patch Panel: Modular panels housing multiple-numbered jack units with IDC-type connectors at each jack for permanent termination of pair groups of installed cables.

1) Number of Jacks per Field: One for each four-pair UTP cable indicated, plus spares and blank positions adequate to suit specified expansion criteria.

c. Jacks and Jack Assemblies: Modular, color-coded, eight-position modular receptacle units with integral IDC-type terminals.

PART 3 - EXECUTION

3.1 INSTALLATION

A. General:

1. All work shall be in accordance with the National Electrical Code's requirements as amended to date, with the local electric utility company's rules, the Fire Underwriter's requirements, and all local, state and federal laws and regulations.
2. In general, all wiring in finished areas shall be concealed in walls or above ceilings. Where wiring cannot be concealed due to existing construction, exposed wiring shall be installed in conduit or surface metal raceway as indicated on the drawings. Exposed wiring shall not be installed in finished areas without prior written authorization from the Engineer.
3. Conduits shall be of sizes required by the National Electrical Code. Exposed conduits shall be installed with runs parallel or perpendicular to walls and ceiling, with right-angle turns consisting of bends, fittings, or outlet boxes. No wire shall be installed until work that might cause damage to wires or conduits has been completed. Conduits shall be thoroughly cleaned of water or other foreign matter before wire is installed.
4. Where conduits, wireways and other electrical raceways pass through fire partitions, fire walls, or floor, install a fire-stop that provides an effective barrier against the spread of fire, smoke and gases. Fire-stop material shall be packed tight and completely fill clearances between raceways and openings. Floor, exterior wall, and roof seals shall also be made watertight.
5. Where raceways puncture roof, coordinate with Division 07.
6. Raceway penetrations through roof and exterior walls shall be made with rigid metal conduit, intermediate metal conduit, or EMT with compression fittings.
7. Surface metal raceways shall be sized as required by the National Electrical code and as recommended by the manufacturer. Surface metal raceways shall be installed with runs parallel or perpendicular to walls and ceiling. Changes in direction shall only be made at device box locations or with fittings designed for the particular application. Installation shall be as visually unobtrusive as possible:

   a. Surface metal raceways shall be painted to match wall finishes.

8. All splices shall be mechanically and electrically perfect, using crimp type wire connectors.
9. Provide all disconnect switches required by the N.E.C.
10. Locate motor starters as shown on drawings.
11. Mount disconnect switches and starters at a height of 60" above finished floor unless otherwise noted.
12. Provide all necessary hardware for mounting motor starters.
13. Locate panelboards so that the present and future conduits can be conveniently connected.
14. A typewritten schedule of circuits, approved by the Owner's Representative shall be on the panel directory cards. Type the room numbers and items served on the cards. Three-

complete separate copies of all directories, neatly bound, shall be delivered to the Owner's Representative.

15. Revise existing panelboard directories. Furnish new cards as needed. Directories shall be typewritten or printed using a computer.
16. Mount the panelboard so that maximum height of circuit breakers above finished floor shall not exceed 78".
17. Circuit numbers indicated on the drawings are the actual numbers assigned to the circuit in the panelboard and shall not be varied without the consent of the Architect/Engineer.
18. Provide all necessary hardware for mounting panelboards.
19. Maintain 1-1/2" spacing between snow melting cable and roof surface. Do not anchor supports to roof.
20. Branch circuit wiring may be nonmetallic-sheathed cable where concealed and allowed by Code, Type NM. NOTE: All romex shall be Properly Supported. (Provide continuous ground wire.)
21. Underground wiring may be installed in rigid nonmetallic conduit. In locations where nonmetallic conduits are used, change to heavy wall metallic conduit of the same internal diameter before rising out of ground. Provide metallic conduit elbows.

    a. Pitch conduits a minimum slope of 1:300 down toward manholes and handholes and away from buildings and equipment. Slope ducts from a high point in runs between two manholes to drain in both directions.
    b. Provide a means for drainage, such a hole drilled in the bottom of the conduit, at low point of underground conduits. Coordinate drainage with Divisions 31 and 33.

22. Feeder circuit wiring shall be in conduit or EMT.
23. All wiring in outside walls shall be in conduit or EMT.
24. All wiring in masonry walls shall be in conduit or EMT.
25. In general, conductors shall be the same size from the last protective device to the load and shall have an ampacity the same as or greater than the ampacity of the protective device where the wire size is not shown on the drawings. Use the 60ºC ampacity rating for wire sizes No. 12 through No. 1. For 120V circuits, home runs longer than 100 feet shall be minimum No. 10 AWG, longer than 200 feet shall be minimum No. 8 AWG.

B. Grounding:

1. The entire electrical system shall be permanently and effectively grounded in accordance with Code requirements. Verify the existing grounding system has one or more of the methods listed below installed and performing in accordance with the NEC. Provide grounding system upgrades as required to achieve proper performance.

    a. Where the domestic water entrance is an undergrounded metal pipe suitable for use as a grounding electrode per NEC, run a grounding electrode conductor between the service entrance switch ground bus and the metallic water pipe system on the street side of the water meter.
    b. Concrete-Encased Grounding Electrode (Ufer Ground): Fabricate according to NFPA 70. Bond grounding conductor to reinforcing steel in at least four locations and to anchor bolts. Extend grounding conductor below grade and connect to building's grounding grid or to grounding electrode external to concrete.

c. Grounding for Steel Building Structure: Install a driven ground rod at base of each corner column and at intermediate exterior columns at distances not more than 60 feet (18 m) apart.
d. Drive three ground rods spaced at least one rod length away from one another to serve as made electrodes.

2. The top of the ground rods shall be a minimum of 6" below finished grade.
3. All perimeter electrical splices and connections and all connections to ground rods, building steel, reinforcing rods, etc., shall be exothermic weld connections, Cadweld or approved equal.
4. Connections to the water service shall be made with an approved ground clamp.
5. Connections to junction boxes, equipment frames, etc., shall be bolted.
6. Conduit Systems:

a. Ground all metallic conduit systems.
b. Conduit systems shall contain a grounding conductor sized per NEC Table 250-122 or as shown on the drawings. Increase conduit size where necessary to accommodate the grounding conductor.

7. Feeders and Branch Circuits: Install green grounding conductors with all feeders and branch circuits.
8. Bare copper ground conductors shall be painted with bitumastic paint where they enter and leave concrete structures.
9. Bare copper ground conductors shall be a minimum of 30" below finished grade.
10. Lighting Fixtures: Conduits shall not be used for grounding fixtures. Green equipment grounding conductor must be bonded to all fixtures.

C. Install secondary service as shown on the drawings, as directed, and in conformance with the utility's requirements.

D. Install the meter socket where shown on the drawings at 60" above finished grade. Connect the meter socket with the transformer pad pit with 1-1/4" conduit per the utility's requirements.

E. Alterations:

1. The Contractor shall study all drawings and specifications, visit the site, and acquaint himself with the existing conditions and the requirements of the plans and specifications. No claim will be recognized for extra compensation due to the failure of the Contractor to familiarize himself with the conditions and extent of the proposed work.
2. The Contractor shall execute all alterations, additions, removals, relocations or new work, etc., as indicated or required to provide a complete installation in accordance with the intent of the drawing and specifications.
3. Reconnect existing circuits to remain. Remove existing equipment to be discontinued.
4. Any existing work disturbed or damaged by the alterations or new work shall be repaired or replaced to the Engineer's satisfaction.
5. Equipment relocated or removed and reinstalled shall be cleaned and repaired to a first-class condition before reinstallation.

F. Fire Alarm System Installation:

1. Installation shall be in accordance with the NEC Article 760, and the Americans with Disabilities Act and as shown on the drawings.
2. Installation shall be as shown on the drawings and on the manufacturer's wiring diagrams, and shall be performed under the supervision of a factory-trained representative.
3. All wiring shall be one wire per terminal to insure supervision. Crimp-on connectors shall not be used.
4. All wiring shall be color-coded and tagged and shall be checked for continuity, short circuiting, and resistance to ground.
5. All fire alarm wiring shall be installed in raceways.
6. A factory-trained technician shall be present during testing and final inspection and shall instruct the Owner in system operation.
7. Splices and taps: Use numbered terminal strips in junction, pull, and outlet boxes; cabinets; or equipment enclosures where circuit connections are made.
8. Mounting Heights:

    a. Manual Stations: 48" AFF
    b. Visual Units: 80" above the highest floor level within the space or 6 in (152 mm) below the ceiling, whichever is lower.

9. Tests:

    a. Provide the service of a competent, factory-trained engineer or technician authorized by the manufacturer of the fire alarm equipment to technically supervise and participate during all of the adjustments and tests for the system. Make all adjustments and tests in the presence of the Owner's Representative.
    b. When the systems have been completed and prior to the final inspection, furnish testing equipment and perform the following tests in the presence of the Owner's Representative.

        1) Before energizing the cables and wires, check for correct connections and test for short circuits, ground faults, continuity, and insulation.
        2) Test the insulation on all installed cable and wiring by standard methods as recommended by the equipment manufacturer.
        3) Open fire alarm detector circuits to see if trouble signal actuates.
        4) Check installation, supervision, operation and sensitivity of smoke detectors as recommended by the manufacturer to ascertain that they will avoid false alarm signals and will function as specified.
        5) Perform any other tests recommended by the equipment manufacturer.

10. Final Inspection: At the final inspection a factory-trained representative of the manufacturer of the existing equipment shall demonstrate that the systems function properly in every respect. The demonstration shall be made in the presence of the Architect/Engineer.

G. Continuity of Services: Arrange to execute work at such times and in such locations to provide uninterrupted service to the building or any of its sections. If necessary, temporary power shall be installed to provide for this condition. Authorization for interrupting service shall be obtained in writing from the Owner. Any interruption of normal supply shall be performed during an

overtime period to be scheduled with the Owner. Cost for overtime work shall be included in the bid.

H. Identification:

1. Provide tags on each end of all pulled wires giving location of other end.
2. Provide phenolic nameplates for all panelboards, motor starters, disconnect switches (except switches located at motors), and duct smoke detector remote test/alarm-indicating stations.
3. Label each receptacle faceplate and equipment disconnect using machine-printed thermal adhesive labels to indicate source panel and branch circuit. For receptacles connected to normal power, labels shall be white with black letters. For receptacles connected to circuits from operational standby (OS) panels, labels shall be red with white letters.
4. Arc-Flash Warning Labels:

   a. Produce a 3.5-by-5-inch thermal transfer label of high-adhesion polyester for each work location included in the analysis.
   b. The label shall have an orange header with the wording, "WARNING, ARC-FLASH HAZARD," and shall include the following information taken directly from the arc-flash hazard analysis:

      1) Location designation.
      2) Nominal voltage.
      3) Flash protection boundary.
      4) Hazard risk category.
      5) Incident energy.
      6) Working distance.
      7) Engineering report number, revision number, and issue date.
      8) Labels shall be machine printed, with no field-applied markings.

   c. Apply one arc-flash label for 480-V ac, and 208-V ac panelboards and disconnects and for each of the following locations:

      1) Disconnect switches and starters serving motors ½ HP and larger.
      2) Low-voltage switchboard and distribution panels
      3) Panelboards and load centers.
      4) Control panel.

I. Record Drawings: The Contractor shall keep on the job a set of prints showing any changes to the installation. These shall be given to the Engineer at the completion of the work.

J. Testing and Adjusting:

1. The entire installation shall be free from short-circuits and improper grounds. Tests shall be made in the presence of the Engineer or his representatives.
2. Each individual lighting circuit shall be tested at the panel; and in testing for insulation resistance to ground, the lighting equipment shall be connected for proper operation. In no case shall the insulation resistance be less than that required by the National Electrical Code. Failures shall be corrected in a manner satisfactory to the Architect/Engineer.
3. Each system shall be completely tested and shall be adjusted for proper operation as required by the Engineer.

K. Instruction: Furnish the services of a competent instructor for not less than two-four hour periods for instructing personnel in the operation and maintenance of the fire alarm system.

L. Closed Circuit Television System: (design and layout provided by owner’s system consultant)

1. Installation shall be in accordance with the NEC and as shown on the drawings.
2. The outdoor camera shall be mounted as shown on the drawings.
3. All wiring shall be in rigid steel conduit.
4. Provide 120V power to for the outdoor camera housing.
5. Tests: Provide the services of a competent, factory-trained engineer or technician authorized by the manufacturer of the television system equipment to technically supervise and participate during all of the adjustments and tests for the system. Make all adjustments and tests in the presence of the Owner's Representative.
6. Final Inspection: At the final inspection, a factory-trained representative of the manufacturer of the major equipment shall demonstrate that the systems function properly in every respect. The demonstration shall be made in the presence of the Owner's Representative.

END OF SECTION

SECTION 28 05 13 - CONDUCTORS AND CABLES FOR ELECTRONIC SAFETY AND SECURITY

PART 1 - GENERAL

1.1 RELATED DOCUMENTS

A. Drawings and general provisions of the Contract, including General and Supplementary Conditions and Division 01 Specification Sections, apply to this Section.

1.2 SUMMARY

A. Section Includes:

1. Fire alarm wire and cable.
2. Identification products.

1.3 DEFINITIONS

A. Low Voltage: As defined in NFPA 70 for circuits and equipment operating at less than 50 V or for remote-control and signaling power-limited circuits.

B. Open Cabling: Passing cabling through open space (e.g., between the studs of a wall cavity).

1.4 ACTION SUBMITTALS

A. Product Data: For each type of product.

1.5 INFORMATIONAL SUBMITTALS

A. Qualification Data: For qualified layout technician, installation supervisor, and field inspector.

1.6 FIELD CONDITIONS

A. Do not install conductors and cables that are wet, moisture damaged, or mold damaged.

1. Indications that wire and cables are wet or moisture damaged include, but are not limited to, discoloration and sagging of factory packing materials.

PART 2 - PRODUCTS

2.1 PERFORMANCE REQUIREMENTS

A. Surface-Burning Characteristics: Comply with ASTM E 84; testing by a qualified testing agency. Identify products with appropriate markings of applicable testing agency.

1. Flame-Spread Index: 25 or less.
2. Smoke-Developed Index: 50 or less.

B. Electrical Components, Devices, and Accessories: Listed and labeled as defined in NFPA 70, by a qualified testing agency, and marked for intended location and application.

2.2 FIRE ALARM WIRE AND CABLE

A. Manufacturers: Subject to compliance with requirements, available manufacturers offering products that may be incorporated into the Work include, but are not limited to, the following:

1. Comtran Corporation.
2. Draka Cableteq USA.
3. Genesis Cable Products; Honeywell International, Inc.
4. Rockbestos-Suprenant Cable Corp.
5. West Penn Wire.

B. General Wire and Cable Requirements: NRTL listed and labeled as complying with NFPA 70, Article 760.

C. Signaling Line Circuits: Twisted, shielded pair, size as recommended by system manufacturer, but not smaller than 18 AWG.

1. Circuit Integrity Cable: Twisted shielded pair, NFPA 70, Article 760, Classification CI, for power-limited fire-alarm signal service Type FPL. NRTL listed and labeled as complying with UL 1424 and UL 2196 for a two-hour rating.

D. Non-Power-Limited Circuits: Solid-copper conductors with 600-V rated, 75 deg C, color-coded insulation.

1. Low-Voltage Circuits: No. 16 AWG, minimum.
2. Line-Voltage Circuits: No. 12 AWG, minimum.
3. Multiconductor Armored Cable: NFPA 70, Type MC, copper conductors, Type TFN/THHN conductor insulation, copper drain wire, copper armor with red identifier stripe, NTRL listed for fire alarm and cable tray installation, plenum rated, and complying with requirements in UL 2196 for a 2-hour rating

2.3 IDENTIFICATION PRODUCTS

A. Manufacturers: Subject to compliance with requirements, available manufacturers offering products that may be incorporated into the Work include, but are not limited to, the following:

1. Brady Worldwide, Inc.
2. Kroy LLC.
3. Panduit Corp.

B. Comply with UL 969 for a system of labeling materials, including label stocks, laminating adhesives, and inks used by label printers.

C. Comply with requirements in Section 26 05 53 "Identification for Electrical Systems."

PART 3 - EXECUTION

3.1 INSTALLATION OF HANGERS AND SUPPORTS

A. Comply with requirements in Section 26 05 29 "Hangers and Supports for Electrical Systems" for installation of supports for cables.

3.2 WIRING METHOD

A. Fire-Rated Cables: Use two-hour, fire-rated fire-alarm cables, NFPA 70, Types MC and CI.

B. Signaling Line Circuits: Power-limited fire-alarm cables shall not be installed in the same cable or pathway as signaling line circuits.

C. Install cable concealed in accessible ceilings, walls, and floors when possible.

3.3 FIRE ALARM WIRING INSTALLATION

A. Comply with NECA 1 and NFPA 72.

B. Wiring within Enclosures: Separate power-limited and non-power-limited conductors as recommended by manufacturer. Install conductors parallel with or at right angles to sides and back of the enclosure. Bundle, lace, and train conductors to terminal points with no excess. Connect conductors that are terminated, spliced, or interrupted in any enclosure associated with the fire alarm system to terminal blocks. Mark each terminal according to the system's wiring diagrams. Make all connections with approved crimp-on terminal spade lugs, pressure-type terminal blocks, or plug connectors.

C. Cable Taps: Use numbered terminal strips in junction, pull, and outlet boxes, cabinets, or equipment enclosures where circuit connections are made.

D. Color-Coding: Color-code fire alarm conductors differently from the normal building power wiring. Use one color-code for alarm circuit wiring and another for supervisory circuits. Color-code audible alarm-indicating circuits differently from alarm-initiating circuits. Use different colors for visible alarm-indicating devices. Paint fire alarm system junction boxes and covers red.

E. For Class A circuits, provide separate conduits or cable for outgoing and return conductors.

F. Wiring to Remote Alarm Transmitting Device: 1-inch conduit between the fire alarm control panel and the transmitter. Install number of conductors and electrical supervision for connecting wiring as needed to suit monitoring function.

3.4 POWER AND CONTROL-CIRCUIT CONDUCTORS

A. 120-V Power Wiring: Install according to Section 26 05 19 "Low-Voltage Electrical Power Conductors and Cables" unless otherwise indicated.

B. Minimum Conductor Sizes:

1. Class 1 remote-control and signal circuits, No. 14 AWG.
2. Class 2 low-energy, remote-control and signal circuits, No. 16 AWG.
3. Class 3 low-energy, remote-control, alarm and signal circuits, No. 12 AWG.

3.5 CONNECTIONS

A. Comply with requirements in Section 28 31 11 "Digital, Addressable Fire-Alarm System for connecting, terminating, and identifying wires and cables.

3.6 FIRESTOPPING

A. Comply with requirements in Division 07.

3.7 GROUNDING

A. For low-voltage wiring and cabling, comply with requirements in Section 26 05 26 "Grounding and Bonding for Electrical Systems."

3.8 IDENTIFICATION

A. Comply with requirements for identification specified in Section 26 05 53 "Identification for Electrical Systems."

3.9 FIELD QUALITY CONTROL

A. Perform the following tests and inspections:

1. Visually inspect cable placement, cable termination, grounding and bonding, equipment, and labeling of all components.

END OF SECTION

SECTION 28 15 00 - ACCESS CONTROL

PART 1 - GENERAL

1.1 RELATED DOCUMENTS

A. Drawings and general provisions of the Contract, including General and Supplementary Conditions and Division 01 Specification Sections, apply to this Section.

1.2 SUMMARY

A. General requirements for Security and CCTV Systems

1. The Access Control / Security System shall be an extension of the existing Honeywell Enterprise Building Integrator System with host computer located in the Cross Office Building, 111 Sewall St., Augusta, ME.

    a. Integration of PCSC panels, associated devices and front end programming may only be handled by Honeywell International, Robert Pennabere, Sr Account Mngr. 207-939-6644, robert.pennabere@honeywell.com.

2. Provide items, articles, materials, operations and methods listed, mentioned or scheduled herein or on drawings, in quantities as required to complete project. Bring to the owners attention any discrepancies or operability issues that may occur if not addressed. Provide hardware that functions properly. Work included; control wiring and terminations for all door access devices, card readers, door position switches, request to exit devices, PCSC security panel(s), power supplies, duress alarm(s), other indicated devices. See Wiring Appendices for termination recommendations.
3. All low voltage wiring outside the control console, cabinets, boxes and similar enclosures, shall be plenum rated where required by code. Cable cannot be routed through conduits or placed in existing raceways, outlet boxes, junction boxes, or similar fittings with other building wiring. Where fire rated barriers such as walls or ceilings are penetrated, apply appropriate fire stopping to maintain intended fire rating.
4. Prior to furnishing hardware, advise contact of items that will not operate properly, are improper for conditions, or will not remain permanently anchored
5. Bidders must provide proof of PCSC certification when submitting bid.
6. Bidders must provide experience of installers when submitting bid.
7. When submitting the bid, bidders must provide after-hours business contact information and how they will respond to issues related to the installation of the security system.
8. The contractor and / or subcontractor shall visit the site to become familiar with all existing conditions affecting this work. No claim will be recognized for extra compensation due to failure of contractor to familiarize himself/herself with the conditions and extent of proposed work.
9. The bidder shall perform a complete system testing to ensure it is operable to the manufacturer’s specifications. The test report shall be submitted to the contact for approval and signoff.

10. Codes and Approvals: The complete Access Control / Security System installation shall be in strict accordance to the national and local electrical codes and the electrical section of these specifications. All devices designed for or used in line voltage applications shall be UL Listed.
11. Access Control equipment shall be listed under the appropriate following UL standards:

    a. UL294 (Access Control System)
    b. UL1076 (Proprietary Alarm Monitoring System)
    c. CE Mark

B. Related Requirements

1. Refer to Division 08 for the following:

    a. Card access components
    b. Request-to-exit devices
    c. Emergency break-glass units
    d. Door position switches
    e. Electrified door hardware and electric locks
    f. Low-voltage wiring for items listed above.

1.3 REGULATORY REQUIREMENTS

A. Complete installation shall conform with all applicable Federal, State and Local laws, Codes and Ordinances, included but not limited to latest approved editions of the following:

1. State Building Codes.
2. Specific Construction Safety Requirements, State Industrial Commission.
3. National Electrical Code - NFPA 70.
4. National Fire Code - NFPA 72.
5. Life Safety Code - NFPA 101.
6. Occupational Safety and Health Act (OSHA) of 1971 and all amendments thereto.
7. ADA - Handicap Accessibility Requirements.

B. Nothing contained in the drawings and specifications shall be construed to conflict with these laws, codes and ordinances, and they are thereby included in these specifications. All work shall comply with the 2011 edition of NFPA 70, The National Electrical Code, and with the 2010 edition of NFPA 72, The National Fire Alarm Code. It shall be the Contractor’s responsibility to assure that all work is in full compliance with applicable codes.

1.4 ACTION SUBMITTALS

A. Product Data: For each type of product indicated. Include rated capacities, operating characteristics, and furnished specialties and accessories. Reference each product to a location on Drawings. Test and evaluation data presented in Product Data shall comply with SIA BIO-01.

B. Shop Drawings: Include plans, elevations, sections, details, and attachments to other work.

1. Battery and charger calculations for central station, workstations, and controllers.

1.5 WARRANTY

A. Guarantee workmanship and material provided against defective manufacture. Repair or replace defective workmanship and material appearing within period of one year after date of completion of Project.

B. Winning bidder is required to provide a 4 hour response time for failure of any warranty work.

PART 2 - PRODUCTS

2.1 ACCESS CONTROL PANEL: (NO SUBSTITUTES)

A. PCSC IQ series

B. Required add – 12V 7AH battery or better

C. PCSC and Power Supply cabinets are to be mounted on ¾” fire retardant plywood backboard painted with two coats of black latex paint.

D. Ground panel according to PCSC manual.

E. Utilize the ESD for card reader drains according to PCSC manual.

F. Use of the IQ400 main board or on-board LAN option for IQ200 is not acceptable.

2.2 CAMERAS: (NO SUBSTITUTES)

A. Provide color video communications between points of surveillance indicated on the drawings and the control room monitoring station. There will be a mixture of fixed cameras and Pan-Tilt-Zoom (PTZ) cameras connected to the LAN and terminating in the Honeywell Digital Video Manager.

B. Camera power will be POE supported.

C. Fixed: Axis, model P3225-V.

D. PTZ: Axis, model P5624-E MKII.

E. Installer is required to focus cameras as defined by the State of Maine. Installer shall supply the following documentation:

1. MAC Address
2. Camera location

3. Camera type / model
4. Camera default password

F. Specifications:

1. HDTV fixed ceiling dome IP camera with 3-axis camera angle adjustment for installation.

   a. Minimum 2MP 1080p

2. PTZ – Minimum 1MP 720p.

   a. Minimum color illumination: 0.2 lux.
   b. 12x Optical Zoom.
   c. Continuous 360-degree pan.

3. Power: Power over Ethernet IEEE Connectors: RJ45
4. Operating Conditions: Appropriate for designated application
5. Approvals: EN 55022 Class B, EN 55024, EN 61000-6-1, EN 61000-6-2, FCC Part 15 Subpart B Class B, ICES-003 Class B, VCCI Class B, C-tick AS/NZS CISPR 22 Class B, KCC KN22 Class B, KN24, IEC/EN 622 Class IK08.

2.3 TERMINAL SERVER: (NO SUBSTITUTES)

A. Lantronix UDS1100

B. Use of Lantronix 500-171-R DB25M to RS485 screw terminal adapter recommended – not required.

2.4 WIRELESS DURESS BUTTONS:

A. Approved UL 681 listed Manufacture.

B. Basis of design manufacturer is Inovonics

C. - EN4216MR receiver

D. EN1235SF fixed position dual-button transmitter

E. EN5040 repeater where required

F. Receiver and repeater (if used) must be powered by the same PCSC panel 12VDC power supply that the monitor points are terminated with. Failure to do so may damage both the Wireless and PCSC panels.

PART 3 - EXECUTION

3.1 6 MONTH INSPECTION AND ADJUSTMENT

A. Approximately six months after date of completion, installer shall examine, test and readjust system components to ensure proper operation.

B. Replace any hardware unit which is defective or cannot be adjusted adequately.

C. After this inspection and adjustment, a letter shall be sent to the contact reporting on conditions, verifying that all hardware has been properly installed and adjusted.

3.2 INTEGRATION OF PCSC PANELS AND DEVICES

A. Integration to the Honeywell EBI shall be processed through Honeywell International, Robert Pennabere, Sr. Account Mngr., 207-939-6644, robert.pennabere@honeywell.com

END OF SECTION

SECTION 28 31 11 - DIGITAL, ADDRESSABLE FIRE-ALARM SYSTEM

PART 1 - GENERAL

1.1 RELATED DOCUMENTS

A. Drawings and general provisions of the Contract, including General and Supplementary Conditions and Division 01 Specification Sections, apply to this Section.

1.2 SUMMARY

A. Section Includes:

1. Fire-alarm control unit.
2. Manual fire-alarm boxes.
3. System smoke detectors.
4. Heat detectors.
5. Notification appliances.
6. Magnetic door holders.
7. Remote annunciator.
8. Addressable interface device.
9. Digital alarm communicator transmitter.

B. Related Requirements:

1. Division 08 for knox boxes.

1.3 DEFINITIONS

A. LED: Light-emitting diode.

B. NICET: National Institute for Certification in Engineering Technologies.

1.4 SYSTEM DESCRIPTION

A. Noncoded addressable system, with automatic sensitivity control of certain smoke detectors and multiplexed signal transmission, dedicated to fire-alarm service only.

1.5 PERFORMANCE REQUIREMENTS

A. Seismic Performance: Fire-alarm control unit and raceways shall withstand the effects of earthquake motions determined according to SEI/ASCE 7.

1. The term "withstand" means "the unit will remain in place without separation of any parts from the device when subjected to the seismic forces specified and the unit will be fully operational after the seismic event."

1.6 ACTION SUBMITTALS

A. Product Data: For each type of product indicated.

B. Shop Drawings: For fire-alarm system. Include plans, elevations, sections, details, and attachments to other work.

1. Comply with recommendations in the "Documentation" Section of the "Fundamentals of Fire Alarm Systems" Chapter in NFPA 72.
2. Include voltage drop calculations for notification appliance circuits.
3. Include battery-size calculations.
4. Include performance parameters and installation details for each detector, verifying that each detector is listed for complete range of air velocity, temperature, and humidity possible when air-handling system is operating.
5. Include plans, sections, and elevations of heating, ventilating, and air-conditioning ducts, drawn to scale and coordinating installation of duct smoke detectors and access to them. Show critical dimensions that relate to placement and support of sampling tubes, detector housing, and remote status and alarm indicators. Locate detectors according to manufacturer's written recommendations.
6. Include floor plans to indicate final outlet locations showing address of each addressable device. Show size and route of cable and conduits.

C. General Submittal Requirements:

1. Submittals shall be approved by authorities having jurisdiction prior to submitting them to Architect.
2. Shop Drawings shall be prepared by persons with the following qualifications:

a. Trained and certified by manufacturer in fire-alarm system design.
b. NICET-certified fire-alarm technician.
c. Licensed or certified by authorities having jurisdiction.

D. Seismic Qualification Certificates: For fire-alarm control unit, accessories, and components, from manufacturer.

1. Basis for Certification: Indicate whether withstand certification is based on actual test of assembled components or on calculation.
2. Dimensioned Outline Drawings of Equipment Unit: Identify center of gravity and locate and describe mounting and anchorage provisions.
3. Detailed description of equipment anchorage devices on which the certification is based and their installation requirements.

E. Operation and Maintenance Data: For fire-alarm systems and components to include in emergency, operation, and maintenance manuals. In addition to items specified in Division 01 include the following:

1. Comply with the "Records" Section of the "Inspection, Testing and Maintenance" Chapter in NFPA 72.
2. Provide "Record of Completion Documents" according to NFPA 72 article "Permanent Records" in the "Records" Section of the "Inspection, Testing and Maintenance" Chapter.
3. Record copy of site-specific software.
4. Provide "Maintenance, Inspection and Testing Records" according to NFPA 72 article of the same name and include the following:

    a. Frequency of testing of installed components.
    b. Frequency of inspection of installed components.
    c. Requirements and recommendations related to results of maintenance.
    d. Manufacturer's user training manuals.

5. Manufacturer's required maintenance related to system warranty requirements.
6. Abbreviated operating instructions for mounting at fire-alarm control unit.

F. Software and Firmware Operational Documentation:

1. Software operating and upgrade manuals.
2. Program Software Backup: On magnetic media or compact disk, complete with data files.
3. Device address list.
4. Printout of software application and graphic screens.

1.7 QUALITY ASSURANCE

A. Installer Qualifications: Personnel shall be trained and certified by manufacturer for installation of units required for this Project.

B. Source Limitations for Fire-Alarm System and Components: Obtain fire-alarm system from single source from single manufacturer.

C. Electrical Components, Devices, and Accessories: Listed and labeled as defined in NFPA 70, by a qualified testing agency, and marked for intended location and application.

D. NFPA Certification: Obtain certification according to NFPA 72 by a UL-listed alarm company.

1.8 PROJECT CONDITIONS

A. Coordinate all device programming and addressing with the Owner.

1.9 SOFTWARE SERVICE AGREEMENT

A. Comply with UL 864.

B. Technical Support: Beginning with Substantial Completion, provide software support for two years.

C. Upgrade Service: Update software to latest version at Project completion. Install and program software upgrades that become available within two years from date of Substantial Completion. Upgrading software shall include operating system. Upgrade shall include new or revised licenses for use of software.

1. Provide 30 days' notice to Owner to allow scheduling and access to system and to allow Owner to upgrade computer equipment if necessary.

1.10 MAINTENANCE MATERIAL SUBMITTALS

A. Furnish extra materials that match products installed and that are packaged with protective covering for storage and identified with labels describing contents.

1. Lamps for Remote Indicating Lamp Units: Quantity equal to 10 percent of amount installed, but no fewer than 1 unit.
2. Lamps for Strobe Units: Quantity equal to 10 percent of amount installed, but no fewer than 1 unit.
3. Smoke Detectors, Fire Detectors: Quantity equal to 10 percent of amount of each type installed, but no fewer than 1 unit of each type.
4. Detector Bases: Quantity equal to 2 percent of amount of each type installed, but no fewer than 1 unit of each type.
5. Keys and Tools: One extra set for access to locked and tamperproofed components.
6. Audible and Visual Notification Appliances: One of each type installed.
7. Fuses: Two of each type installed in the system.

PART 2 - PRODUCTS

2.1 MANUFACTURER

A. Manufacturer shall be Honeywell XLS120. The control panel shall be connected to the existing Honeywell Enterprise Buildings Integrator (EBI) network that serves the campus.

2.2 SYSTEMS OPERATIONAL DESCRIPTION

A. Fire-alarm signal initiation shall be by one or more of the following devices and systems:

1. Manual stations.
2. Heat detectors.
3. Smoke detectors.
4. Duct smoke detectors.
5. Verified automatic alarm operation of smoke detectors.
6. Automatic sprinkler system water flow.
7. Heat detectors in elevator shaft and pit.
8. Fire-extinguishing system operation.
9. Pre-action system operation
10. Fire standpipe system.

B. Fire-alarm signal shall initiate the following actions:

1. Continuously operate alarm notification appliances.
2. Identify alarm at fire-alarm control unit and remote annunciators.
3. Transmit an alarm signal to the remote alarm receiving station.
4. Release fire and smoke doors held open by magnetic door holders.
5. Switch heating, ventilating, and air-conditioning equipment controls to fire-alarm mode.
6. Close smoke dampers in air ducts of designated air-conditioning duct systems.
7. Recall elevators to primary or alternate recall floors.
8. Activate emergency shutoffs for gas and fuel supplies.
9. Record events in the system memory.

C. Supervisory signal initiation shall be by one or more of the following devices and actions:

1. Valve supervisory switch.
2. Low-air-pressure switch of a dry-pipe sprinkler system.
3. Elevator shunt-trip supervision.

D. System trouble signal initiation shall be by one or more of the following devices and actions:

1. Open circuits, shorts, and grounds in designated circuits.
2. Opening, tampering with, or removing alarm-initiating and supervisory signal-initiating devices.
3. Loss of primary power at fire-alarm control unit.
4. Ground or a single break in fire-alarm control unit internal circuits.
5. Abnormal ac voltage at fire-alarm control unit.
6. Break in standby battery circuitry.
7. Failure of battery charging.
8. Abnormal position of any switch at fire-alarm control unit or annunciator.
9. Low-air-pressure switch operation on a dry-pipe or preaction sprinkler system.

E. System Trouble and Supervisory Signal Actions: Initiate notification appliance and annunciate at fire-alarm control unit and remote annunciators. Transmit a trouble or supervisory signal to the remote alarm receiving station.

2.3 FIRE-ALARM CONTROL UNIT

A. General Requirements for Fire-Alarm Control Unit:

1. Field-programmable, microprocessor-based, modular, power-limited design with electronic modules, complying with UL 864 and listed and labeled by an NRTL.

   a. System software and programs shall be held in flash electrically erasable programmable read-only memory (EEPROM), retaining the information through failure of primary and secondary power supplies.
   b. Include a real-time clock for time annotation of events on the event recorder.

2. Addressable initiation devices that communicate device identity and status.

    a. Smoke sensors shall additionally communicate sensitivity setting and allow for adjustment of sensitivity at fire-alarm control unit.
    b. Temperature sensors shall additionally test for and communicate the sensitivity range of the device.

3. Addressable control circuits for operation of mechanical equipment.

B. Alphanumeric Display and System Controls: Arranged for interface between human operator at fire-alarm control unit and addressable system components including annunciation and supervision. Display alarm, supervisory, and component status messages and the programming and control menu.

1. Annunciator and Display: Liquid-crystal type, 2 line(s) of 40 characters, minimum.
2. Keypad: Arranged to permit entry and execution of programming, display, and control commands and to indicate control commands to be entered into the system for control of smoke-detector sensitivity and other parameters.

C. Circuits:

1. Initiating Device, Notification Appliance, and Signaling Line Circuits: NFPA 72, Class A.

    a. Notification Appliance Circuits: Style Z.
    b. Signaling Line Circuits: Style 6.
    c. Pathway Survivability Level 1.
    d. Install no more than 50 addressable devices on each signaling line circuit.

2. Serial Interfaces: Two RS-232 ports for printers.

D. Smoke-Alarm Verification:

1. Initiate audible and visible indication of an "alarm-verification" signal at fire-alarm control unit.
2. Activate an NRTL-listed and -approved "alarm-verification" sequence at fire-alarm control unit and detector.
3. Sound general alarm if the alarm is verified.
4. Cancel fire-alarm control unit indication and system reset if the alarm is not verified.

E. Elevator Recall:

1. Smoke detectors at the following locations shall initiate automatic elevator recall.

    a. Elevator lobby detectors except the lobby detector on the designated floor.
    b. Smoke detector in elevator machine room.
    c. Smoke detectors in elevator hoistway.

2. Elevator lobby detectors located on the designated recall floors shall be programmed to move the cars to the alternate recall floor.

3. Water-flow alarm connected to sprinkler in an elevator shaft and elevator machine room shall shut down elevators associated with the location without time delay.

    a. Water-flow switch associated with the sprinkler in the elevator pit may have a delay to allow elevators to move to the designated floor.

F. Door Controls: Door hold-open devices that are controlled by smoke detectors at doors in smoke barrier walls shall be connected to fire-alarm system.

G. Remote Smoke-Detector Sensitivity Adjustment: Controls shall select specific addressable smoke detectors for adjustment, display their current status and sensitivity settings, and change those settings. Allow controls to be used to program repetitive, time-scheduled, and automated changes in sensitivity of specific detector groups. Record sensitivity adjustments and sensitivity-adjustment schedule changes in system memory, and print out the final adjusted values on system printer.

H. Transmission to Remote Alarm Receiving Station: Automatically transmit alarm, supervisory, and trouble signals to a remote alarm station.

I. Primary Power: 24-V dc obtained from 120-V ac service and a power-supply module. Initiating devices, notification appliances, signaling lines, trouble signals, supervisory and digital alarm communicator transmitters shall be powered by 24-V dc source.

1. Alarm current draw of entire fire-alarm system shall not exceed 80 percent of the power-supply module rating.

J. Secondary Power: 24-V dc supply system with batteries, automatic battery charger, and automatic transfer switch.

1. Batteries: Sealed lead calcium.

K. Instructions: Computer printout or typewritten instruction card mounted behind a plastic or glass cover in a stainless-steel or aluminum frame. Include interpretation and describe appropriate response for displays and signals. Briefly describe the functional operation of the system under normal, alarm, and trouble conditions.

2.4 MANUAL FIRE-ALARM BOXES

A. General Requirements for Manual Fire-Alarm Boxes: Comply with UL 38. Boxes shall be finished in red with molded, raised-letter operating instructions in contrasting color; shall show visible indication of operation; and shall be mounted on recessed outlet box. If indicated as surface mounted, provide manufacturer's surface back box.

1. Single-action mechanism, type; with integral addressable module arranged to communicate manual-station status (normal, alarm, or trouble) to fire-alarm control unit.
2. Station Reset: Key- or wrench-operated switch.
3. Indoor Protective Shield: Factory-fabricated clear plastic enclosure hinged at the top to permit lifting for access to initiate an alarm. Lifting the cover actuates an integral battery-powered audible horn intended to discourage false-alarm operation.

2.5 SYSTEM SMOKE DETECTORS

A. General Requirements for System Smoke Detectors:

1. Comply with UL 268; operating at 24-V dc, nominal.
2. Detectors shall be two-wire type.
3. Integral Addressable Module: Arranged to communicate detector status (normal, alarm, or trouble) to fire-alarm control unit.
4. Base Mounting: Detector and associated electronic components shall be mounted in a twist-lock module that connects to a fixed base. Provide terminals in the fixed base for connection to building wiring.
5. Self-Restoring: Detectors do not require resetting or readjustment after actuation to restore them to normal operation.
6. Integral Visual-Indicating Light: LED type indicating detector has operated and power-on status.
7. Remote Control: Unless otherwise indicated, detectors shall be analog-addressable type, individually monitored at fire-alarm control unit for calibration, sensitivity, and alarm condition and individually adjustable for sensitivity by fire-alarm control unit.

    a. Rate-of-rise temperature characteristic shall be selectable at fire-alarm control unit for 15 or 20 deg F per minute.
    b. Fixed-temperature sensing shall be independent of rate-of-rise sensing and shall be settable at fire-alarm control unit to operate at 135 or 155 deg F.
    c. Provide multiple levels of detection sensitivity for each sensor.

B. Photoelectric Smoke Detectors:

1. Detector address shall be accessible from fire-alarm control unit and shall be able to identify the detector's location within the system and its sensitivity setting.
2. An operator at fire-alarm control unit, having the designated access level, shall be able to manually access the following for each detector:

    a. Primary status.
    b. Device type.
    c. Present average value.
    d. Present sensitivity selected.
    e. Sensor range (normal, dirty, etc.).

C. Duct Smoke Detectors: Photoelectric type complying with UL 268A.

1. Detector address shall be accessible from fire-alarm control unit and shall be able to identify the detector's location within the system and its sensitivity setting.
2. An operator at fire-alarm control unit, having the designated access level, shall be able to manually access the following for each detector:

    a. Primary status.
    b. Device type.
    c. Present average value.
    d. Present sensitivity selected.
    e. Sensor range (normal, dirty, etc.).

3. Weatherproof Duct Housing Enclosure: NEMA 250, Type 4X; NRTL listed for use with the supplied detector. Must be UL listed to function with installed fire alarm system.
4. Watertight and Corrosive Resistant Enclosure (for use in each DOAS unit exhaust compartment): NEMA 4X, NRTL listed for use with the supplied detector and equal to performance of Air Products & Controls, model No. RT-3000-P (plus required tube assembly). Must be UL listed to function with installed fire alarm system.
5. Each sensor shall have multiple levels of detection sensitivity.
6. Sampling Tubes: Design and dimensions as recommended by manufacturer for specific duct size, air velocity, and installation conditions where applied.
7. Relay Fan Shutdown: Rated to interrupt fan motor-control circuit.

2.6 HEAT DETECTORS

A. General Requirements for Heat Detectors: Comply with UL 521.

B. Heat Detector, Combination Type: Actuated by either a fixed temperature of 135 deg F or a rate of rise that exceeds 15 deg F per minute unless otherwise indicated.

1. Mounting: Twist-lock base interchangeable with smoke-detector bases.
2. Integral Addressable Module: Arranged to communicate detector status (normal, alarm, or trouble) to fire-alarm control unit.

C. Heat Detector, Fixed-Temperature Type: Actuated by temperature that exceeds a fixed temperature of 190 deg F.

1. Mounting: Twist-lock base interchangeable with smoke-detector bases.
2. Integral Addressable Module: Arranged to communicate detector status (normal, alarm, or trouble) to fire-alarm control unit.

2.7 NOTIFICATION APPLIANCES

A. General Requirements for Notification Appliances: Connected to notification appliance signal circuits, zoned as indicated, equipped for mounting as indicated and with screw terminals for system connections.

1. Combination Devices: Factory-integrated audible and visible devices in a single-mounting assembly, equipped for mounting as indicated and with screw terminals for system connections.

B. Horns: Electric-vibrating-polarized type, 24-V dc; with provision for housing the operating mechanism behind a grille. Comply with UL 464. Horns shall produce a sound-pressure level of 90 dBA, measured 10 feet from the horn, using the coded signal prescribed in UL 464 test protocol.

C. Visible Notification Appliances: Xenon strobe lights comply with UL 1971, with clear or nominal white polycarbonate lens mounted on an aluminum faceplate. The word "FIRE" is engraved in minimum 1-inch-high letters on the lens.

1. Rated Light Output:

   a. 15/30/75/110 cd, selectable in the field.

2. Mounting: Wall mounted unless otherwise indicated.
3. For units with guards to prevent physical damage, light output ratings shall be determined with guards in place.
4. Flashing shall be in a temporal pattern, synchronized with other units.
5. Strobe Leads: Factory connected to screw terminals.
6. Mounting Faceplate: Factory finished, [red] [white].

2.8 MAGNETIC DOOR HOLDERS

A. Description: Units are equipped for wall or floor mounting as indicated and are complete with matching doorplate.

   1. Electromagnet: Requires no more than 3 W to develop 25-lbf holding force.
   2. Wall-Mounted Units: Flush mounted unless otherwise indicated.
   3. Rating: 24-V ac or dc.
   4. Rating: 120-V ac.

B. Material and Finish: Match door hardware.

2.9 REMOTE ANNUNCIATOR

A. Description: Annunciator functions shall match those of fire-alarm control unit for alarm, supervisory, and trouble indications. Manual switching functions shall match those of fire-alarm control unit, including acknowledging, silencing, resetting, and testing.

   1. Mounting: Flush cabinet, NEMA 250, Type 1.

B. Display Type and Functional Performance: Alphanumeric display and LED indicating lights shall match those of fire-alarm control unit. Provide controls to acknowledge, silence, reset, and test functions for alarm, supervisory, and trouble signals.

2.10 ADDRESSABLE INTERFACE DEVICE

A. Description: Microelectronic monitor module, NRTL listed for use in providing a system address for alarm-initiating devices for wired applications with normally open contacts.

B. Integral Relay: Capable of providing a direct signal to elevator controller to initiate elevator recall to circuit-breaker shunt trip for power shutdown.

2.11 DIGITAL ALARM COMMUNICATOR TRANSMITTER

A. Digital alarm communicator transmitter shall be acceptable to the remote central station and shall comply with UL 632 and be listed and labeled by an NRTL.

B. Functional Performance: Unit shall receive an alarm, supervisory, or trouble signal from fire-alarm control unit and automatically capture two telephone line(s) and dial a preset number for a remote central station. When contact is made with central station(s), signals shall be transmitted. If service on either line is interrupted for longer than 45 seconds, transmitter shall initiate a local trouble signal and transmit the signal indicating loss of telephone line to the remote alarm receiving station over the remaining line. Transmitter shall automatically report telephone service restoration to the central station. If service is lost on both telephone lines, transmitter shall initiate the local trouble signal.

C. Local functions and display at the digital alarm communicator transmitter shall include the following:

1. Verification that both telephone lines are available.
2. Programming device.
3. LED display.
4. Manual test report function and manual transmission clear indication.
5. Communications failure with the central station or fire-alarm control unit.

D. Digital data transmission shall include the following:

1. Address of the alarm-initiating device.
2. Address of the supervisory signal.
3. Address of the trouble-initiating device.
4. Loss of ac supply or loss of power.
5. Low battery.
6. Abnormal test signal.
7. Communication bus failure.

E. Secondary Power: Integral rechargeable battery and automatic charger.

F. Self-Test: Conducted automatically every 24 hours with report transmitted to central station.

PART 3 - EXECUTION

3.1 EQUIPMENT INSTALLATION

A. Comply with NFPA 72 for installation of fire-alarm equipment.

B. Install wall-mounted equipment, with tops of cabinets not more than 72 inches above the finished floor.

1. Comply with requirements for seismic-restraint devices specified in Section 26 05 48 "Vibration and Seismic Controls for Electrical Systems."

C. Smoke- or Heat-Detector Spacing:

1. Comply with NFPA 72, "Smoke-Sensing Fire Detectors" Section in the "Initiating Devices" Chapter, for smoke-detector spacing.

2. Comply with NFPA 72, "Heat-Sensing Fire Detectors" Section in the "Initiating Devices" Chapter, for heat-detector spacing.
3. Smooth ceiling spacing shall not exceed 30 feet.
4. Spacing of detectors for irregular areas, for irregular ceiling construction, and for high ceiling areas shall be determined according to Appendix A or Appendix B in NFPA 72.
5. HVAC: Locate detectors not closer than 3 feet from air-supply diffuser or return-air opening.
6. Lighting Fixtures: Locate detectors not closer than 12 inches from any part of a lighting fixture.

D. Duct Smoke Detectors: Comply with NFPA 72 and NFPA 90A. Install sampling tubes so they extend the full width of duct.

E. Heat Detectors in Elevator Shafts: Coordinate temperature rating and location with sprinkler rating and location.

F. Remote Status and Alarm Indicators: Install near each smoke detector and each sprinkler water-flow switch and valve-tamper switch that is not readily visible from normal viewing position.

G. Audible Alarm-Indicating Devices: Install not less than 6 inches below the ceiling. Install bells and horns on flush-mounted back boxes with the device-operating mechanism concealed behind a grille.

H. Visible Alarm-Indicating Devices: Install adjacent to each alarm bell or alarm horn and at least 6 inches below the ceiling.

I. Device Location-Indicating Lights: Locate in public space near the device they monitor.

J. Fire-Alarm Control Unit: Surface mounted, with tops of cabinets not more than 72 inches above the finished floor.

K. Annunciator: Install with top of panel not more than 72 inches above the finished floor.

3.2 CONNECTIONS

A. For fire-protection systems related to doors in fire-rated walls and partitions and to doors in smoke partitions, comply with requirements in Division 08 Connect hardware and devices to fire-alarm system.

1. Verify that hardware and devices are NRTL listed for use with fire-alarm system in this Section before making connections.

B. Make addressable connections with a supervised interface device to the following devices and systems. Install the interface device less than 3 feet from the device controlled. Make an addressable confirmation connection, when such feedback is available, at the device or system being controlled.

1. Alarm-initiating connection to smoke-control system (smoke management) at firefighter smoke-control system panel.
2. Alarm-initiating connection to stairwell and elevator-shaft pressurization systems.

3. Alarm-initiating connection to sprinkler system water flow switches
4. Smoke dampers in air ducts of designated air-conditioning duct systems.
5. Alarm-initiating connection to elevator recall system and components.
6. Alarm-initiating connection to activate emergency shutoffs for gas and fuel supplies.
7. Supervisory connections at each sprinkler system valve supervisory switches.
8. Supervisory connections at low-air-pressure switch of each dry-pipe sprinkler system.
9. Supervisory connections at elevator shunt trip breaker.
10. Supervisory connections at fire-pump power failure including a dead-phase or phase-reversal condition.
11. Supervisory connections at fire-pump engine control panel.

3.3 IDENTIFICATION

A. Identify system components, wiring, cabling, and terminals. Comply with requirements for identification specified in Section 26 05 53 "Identification for Electrical Systems."

B. Install framed instructions in a location visible from fire-alarm control unit.

3.4 GROUNDING

A. Ground fire-alarm control unit and associated circuits; comply with IEEE 1100. Install a ground wire from main service ground to fire-alarm control unit.

3.5 FIELD QUALITY CONTROL

A. Field tests shall be witnessed by Owner’s representative.

B. Perform tests and inspections.

1. Manufacturer's Field Service: Engage a factory-authorized service representative to inspect components, assemblies, and equipment installations, including connections, and to assist in testing.

C. Tests and Inspections:

1. Visual Inspection: Conduct visual inspection prior to testing.

   a. Inspection shall be based on completed Record Drawings and system documentation that is required by NFPA 72 in its "Completion Documents, Preparation" Table in the "Documentation" Section of the "Fundamentals of Fire Alarm Systems" Chapter.
   b. Comply with "Visual Inspection Frequencies" Table in the "Inspection" Section of the "Inspection, Testing and Maintenance" Chapter in NFPA 72; retain the "Initial/Reacceptance" column and list only the installed components.

2. System Testing: Comply with "Test Methods" Table in the "Testing" Section of the "Inspection, Testing and Maintenance" Chapter in NFPA 72.

3. Test audible appliances for the public operating mode according to manufacturer's written instructions. Perform the test using a portable sound-level meter complying with Type 2 requirements in ANSI S1.4.
4. Test visible appliances for the public operating mode according to manufacturer's written instructions.
5. Factory-authorized service representative shall prepare the "Fire Alarm System Record of Completion" in the "Documentation" Section of the "Fundamentals of Fire Alarm Systems" Chapter in NFPA 72 and the "Inspection and Testing Form" in the "Records" Section of the "Inspection, Testing and Maintenance" Chapter in NFPA 72.

D. Reacceptance Testing: Perform reacceptance testing to verify the proper operation of added or replaced devices and appliances.

E. Fire-alarm system will be considered defective if it does not pass tests and inspections.

F. Prepare test and inspection reports.

3.6 DEMONSTRATION

A. Engage a factory-authorized service representative to train Owner's maintenance personnel to adjust, operate, and maintain fire-alarm system.

END OF SECTION

SECTION 28 31 15 - EMERGENCY RESPONDER RADIO ANTENNA/REPEATER SYSTEM

Signal Strength Testing – BASE BID

Furnish and Install System – ADD ALTERNATE

PART 1 - GENERAL

1.1 SUMMARY

A. Under the BASE BID contract provide fire fighter communication system signal strength testing for the facility. Testing shall occur once final finishes have been applied and FFE has been installed. Results of signal strength testing will be shared and reviewed by the fire department for final agreement as to whether the repeater system is required or is not. Should it be determined as a result of the signal strength testing that the antenna/repeater system is required then provide an ADD ALTERNATE NO. 10 price to the owner for system procurement and installation within the base bid project completion schedule.

B. Furnish, install, and test a complete and operating Emergency Responder Radio Antenna/Repeater System. The system will support only the Fire Department radio system and no others. Provisions for supporting other public safety systems (e.g. police); cellphone carriers; the Owners' private security and/or maintenance personnel radio systems, etc. – now or in the future – shall not be included.

C. This Section includes the requirements for an Emergency Responder Radio Antenna/Repeater System for the purposes of amplifying Emergency Responder radio signals to achieve minimum signal strength in 95% of all areas on each floor of the building.

D. Final acceptance and approval is required from the local Fire Department in writing prior to contract closeout.

E. Section Includes

1. Bi-directional amplifiers (BDA's)
2. Distributed Antenna System
3. Coaxial cables
4. Splitters and direction couplers
5. UPS
6. All other equipment and components necessary for a complete and functioning Emergency Responder Radio Antenna/Repeater System.

1.2 REGULATIONS

A. Codes, regulations and standards referenced in the Section are:

1. NFPA 1 – The National Fire Code (including Annex O from 2009)
2. NFPA 70 – The National Electrical Code

3. NFPA 101, Life Safety Code, the Ohio Basic Building Code, and Local Code and Building Authority requirements.
4. NFPA 72 National Fire Alarm and Signaling Code
5. FCC 47 CFR Private Land Mobile Radio
6. 90.219-2007 Services-Use of Signal Boosters
7. ICC 2009 International Fire Code, Code and Commentary
8. ADA "Americans with Disabilities Act"
9. FCC's OET 65 Standards "Guidelines for Human Exposure to Radio Frequency Electromagnetic Fields".
10. FCC Rules Part 22, Part 90 and Part 101.

1.3 DEFINITIONS

A. Bi-Directional Amplifier BDA: Device used to amplify band-selective or multi-band RF signals in the uplink, to the base station for enhanced signals and improved coverage.

B. Emergency Responder Radio Coverage System: A two-way radio communication system installed to assure the effective operation of radio communications systems for fire, emergency medical services or law enforcement agencies within a building or structure. A system used by firefighters, police, and other emergency services personnel.

C. Delivered Audio Quality Definitions (DAQ): This is a universal standard often cited in system designs and specifications.

1. DAQ 1: Unusable, speech present but unreadable.
2. DAQ 2: Understandable with considerable effort. Frequent repetition due to noise/distortion.
3. DAQ 3: Speech understandable with slight effort. Occasional repetition required due to noise/distortion.
4. DAQ 3.5: Speech understandable with repetition only rarely required. Some noise/distortion
5. DAQ 4: Speech easily understood. Occasional noise/distortion.
6. DAQ 4.5: Speech easily understood. Infrequent noise/distortion.
7. DAQ 5: Speech easily understood. Coupled Bonding Conductor (CBC) – The term "Coupled Bonding Conductor" shall mean a bonding conductor placed, e.g. strapped, on the outside of any technology cable, used to suppress transient noise.

D. FCC: Federal Communications Commission

E. OET 65 Standards: FCC's Bulletin 65 provides Guidelines for Human Exposure to Radio Frequency Electromagnetic Fields.

F. Public Safety/First Responder: Public Safety or First Responder agencies which are charged with the responsibility of responding to emergency situations. These include, but are not limited to: law enforcement departments, fire departments, and emergency medical companies.

1.4 SUBMITTALS

A. Submit product data for each type of proposed system component specified, including dimensioned drawings showing minimum clearances and installed features.

B. Layout Drawings

1. Component specification sheets shall be 8.5 inch x 11 inch or greater, scaled or dimensioned, with dimensions or scale clearly noted.
2. Floor plan drawings shall be 24 inch x 36 inch minimum with drawings scaled to legible size.
3. Floor plan drawings may include elevation detail names for each elevation view. Sheet title shall include site name, address, sheet number, floor plan number and north arrow. Include site plan view of the subject buildings and surrounding property to clearly indicate the location and orientation of roof mounted outdoor antennas associated with the proposed system.
4. Include a minimum of (1) building elevation depicting the location of any outdoor antennas associated with the proposed system. Include height of antenna centerline above building, orientation, and location of all external grounding connections.
5. Include a detail plan view of all Telecommunications Spaces housing head-end and/or other consolidated equipment, showing the location of the rack(s) and/or enclosure(s) of the Emergency Responder Radio Antenna/Repeater System equipment.
6. Include a separate plan view of each interior floor where indoor antenna systems are proposed. Include antenna numbers, coaxial cable routes, and the locations of any other system components including splitters, couplers, filters, amplifiers, etc. All components shall be named or labeled for reference in power budget calculations tables. Overlay approximated coverage radii indicating –95 dBm downlink (base to mobile) signal strength around each proposed indoor coverage antenna. Include results of any previous coverage testing per grid, if available.
7. Include a minimum of one (1) detail elevation view(s) of all rack(s) and/or enclosure(s) housing the Emergency Responder Radio Antenna/Repeater System equipment.
8. Identify each piece of equipment by brand, model number and equipment type (e.g. Acme BA123 RF amplifier).
9. Specify antenna grounding and surge protection in accordance with NEC Article 810.
10. Specify the backup power source (Life Safety), and include calculations to ensure the backup power requirements as specified in this standard are met.

C. Equipment Specification Sheets

1. Provide copies of manufacturer specification sheets of all system components, including:

   a. Amplifiers
   b. Antennas
   c. Coaxial cable, couplers, splitters, combiners, or other passive components

2. Operation and maintenance data
3. Pass band curves in for the uplink and downlink portions of the NPSPAC band for any amplifiers, if not included in #1. Amplifiers may NOT amplify portions of other licensed services, including Nextel and Specialized Mobile Radio Licensee band, or Cellular A or B bands.
4. Backup battery and charging system.

D. Submit wiring diagrams from manufacturer differentiating clearly between factory and field-installed wiring. Include diagrams for each component of the system with all terminals and interconnections identified. Make all diagrams specific to this Project.

E. Submit product certificates signed by the manufacturer of radio system components certifying that their products comply with specified requirements.

F. Submit agenda for training class and copies of all handouts for the class.

G. Maintenance data for radio system shall be included in the operation and maintenance manual. Include data for each type of product, including all features and operating sequences, both automatic and manual. Provide the names, addresses, and telephone numbers of service organizations that carry stock of repair parts for the system to be furnished.

H. Record of field tests of the radio system shall be included in the operation and maintenance manuals.

I. Design Approval: Plans shall be submitted and approved prior to installation. The following information shall be provided to the local Fire Department unit representative by the system designer/Contractor:

1. A minimum of three (3) copies of detailed drawings showing the location of the amplification equipment and associated antenna systems which includes a view showing building access to the equipment; and
2. A minimum of three (3) copies of schematic drawings of the electrical system, backup power, antenna system and any other associated equipment relative to the amplification equipment including panel locations and labeling.
3. A minimum of one (1) copy of the Manufacturer's data sheets on all equipment to be installed.

1.5 QUALITY ASSURANCE

A. Installer Qualifications: Engage an experienced factory-authorized installer to perform work of this Section.

B. Single-Source Responsibility: Obtain radio system components from a single source who assumes responsibility for compatibility of system components.

C. All equipment shall be UL listed and labeled, and in accordance with applicable NEMA and ANSI Standards. Where copper cabling is routed to an area, either in another building, or with a separate electrical service, the Technology Contractor shall provide primary protective equipment.

D. All racks and enclosures shall be either welded or assembled with paint piercing ground washers, grounding strip and bonding jumper as indicated on the Drawings.

PART 2 - PRODUCTS

2.1 MANUFACTURER

A. Subject to compliance with requirements, available Integrators offering products that may be incorporated into the Work include, but are not limited to, the following:

1. Radio Solutions, Inc
2. Corning
3. Times Microwave
4. Tessco
5. CCI (Communication Components Inc.)
6. Solid Technologies
7. CommScope/Andrew

2.2 GENERAL PERFORMANCE REQUIREMENTS

A. Compatibility: The equipment, including but not limited to repeaters, transmitters, receivers, signal boosters, cabling, fiber distributed antenna system, etc., shall not interfere with the existing communication systems utilized by the Public Safety and First Responder agencies.

B. Power Supplies: At least two (2) independent and reliable power supplies shall be provided, one primary and one secondary. The primary power source shall be supplied from a dedicated 20 ampere branch circuit and comply with 4.4.1.4 of NFPA 72. The secondary power source shall be a dedicated battery, capable of operating the in-building radio system for at least 12 hours of 100% system operation. The battery system shall automatically charge in the presence of external power input. The battery system shall be contained in one NEMA 4 or 4X type enclosures. Monitoring the integrity of power supplies shall be in accordance with 4.4.7.3 of NFPA 72.

C. Survivability

1. Physical Protection: All wiring and fiber optics shall be installed in conduit. Refer to Section 26 05 33, "Conduit and Fittings" for type, sizing and installation standards.
2. Fire Performance: All main risers or trunks of the antenna system shall be installed with resistance to attack from a fire using one of the following methods:

   a. A 2-hour fire rated cable or cable system.
   b. Routing the cable through a 2-hour fire rated enclosure(s) or shaft(s).
   c. A system configured in a looped design, routed through 1-hour fire rated enclosure(s) or shaft(s). The circuit shall be capable of transmitting and receiving a signal during a single open or non-simultaneous single ground fault on a circuit conductor.
   d. Performance alternative approved by the authority having jurisdiction.

3. Cabinet: The signal booster and all associated RF filters shall be housed in a single, NEMA 4 certified, painted steel weather tight box. The cabinet shall be large enough to dissipate internal heat without venting the inside of the cabinet to the outside atmosphere. Operating temperatures: –22 degrees F to +120 degrees F (–30 degrees C to +50 degrees

C) minimum temperature range, including microprocessors. Equipment installed on the roof of structures shall be rated for the expected extreme temperatures associated with rooftop installations.

4. Passive Equipment: Passband shall be 700-900 MHz, IP rating of 2 GHz.
5. Cable: Passband shall be 700-900 MHz. Cable shall be rated for fire plenum and riser rating.

2.3 SYSTEM COMPONENTS

A. Signal Strength

1. Downlink: A minimum signal strength of -95 dBm shall be provided throughout the coverage area.
2. Uplink: Minimum signal strength of -95 dBm received at the local Fire Department Radio System from the coverage area.
3. A donor antenna must maintain isolation from the distributed antenna system. The donor antenna signal level shall be a minimum of 15 dB above the distributed antenna system under all operating conditions.

B. Permissible Systems

1. Buildings and structures shall be equipped with an FCC Certificated Class B Bi-Directional UHF Amplifier(s) as needed.
2. The distributed antenna system may utilize a radiating cable, fixed antennas or a combination of both.

C. Supported Frequencies: The radio system shall support frequencies in the 700 and 800 MHz public safety bands as utilized by the local Fire Department.

D. Reject Filters: Notch filter sections shall be incorporated to minimize adjacent channel cellular and SMR (Nextel) degradation of the signal booster performance. The minimum downlink band adjacent band rejection shall be 35 dB or greater at 865 MHz and 870 MHz.

E. Band Migration Capability: The signal booster shall include re-tunable or replaceable filters to accommodate rapid and economic passband changes in the event of mandatory FCC changes within the NPSPAC band. The use of non-adjustable and non-replaceable RF input and output filters is prohibited.

F. Output Level Control: An automatic output leveling circuit shall be included for both passbands with a minimum dynamic range of 60 dB, less any gain reduction setting, to maintain FCC out of band and spurious emission compliance.

G. Degraded Performance in Emergencies: The system shall be designed to allow degraded performance in adverse conditions, such as abnormally high temperatures resulting from nearby fires, extreme voltage fluctuations or other abnormal conditions that may occur during an emergency. Circuits that intentionally disable the signal booster in such situations (i.e. under/over voltage, over/under current, over/under temperature, etc.) will not be implemented as the standard mode for public safety applications.

H. Mode of Operation: The system shall be normally powered on and shall continuously provide passing of frequencies within the Public Safety and First Responder bands.

I. All in-building radio systems shall be compatible with both analog and digital communications simultaneously at the time of installation.

2.4 SYSTEM MONITORING

A. The distributed antenna system shall include a connection to the fire alarm system to monitor the integrity of the circuit of the signal booster(s) and power supplies and annunciate this malfunction on the fire alarm system shall comply with 4.4.7.1 of NFPA 72.

B. A sign shall be located at the fire alarm panel with the name and telephone number of the local Fire Department indicating that they shall be notified of any failures that extend past the 2 hour time limit.

PART 3 - EXECUTION

3.1 INSTALLATION

A. Distribution System Signal Wires and Cables.

1. Wires and cables shall enter each equipment enclosure, console, cabinet or rack in such a manner that all doors or access panels can be opened and closed without removal or disruption of the cables.
2. Routing and Interconnection

    a. Wires or cables routed between consoles, cabinets, racks, and other equipment shall be installed in an approved conduit or cable tray that is secured to building structure.
    b. Completely test all of the cables after installation and replace any that are found to be defective.

3. Install cables without damaging conductors, shield, or jacket.
4. Do not bend cables, while handling or installing, to radii smaller than as recommended by manufacturer.
5. Pull cables without exceeding cable manufacturer's recommended pulling tensions.

B. Product Delivery, Storage, and Handling

1. Delivery: Deliver materials to the job site in OEM's original unopened containers, clearly labeled with the OEM's name and equipment model and serial identification numbers.
2. Store and protect equipment in a conditioned space until installation.

C. System Installation

1. Coaxial antenna cabling shall not be installed in the same conduit, raceway, or cable trays used for other systems.
2. All equipment shall be connected according to the OEM's specifications to insure correct installation and system performance.
3. Coordinate all roof penetrations with Owner and/or roofing contractor.

3.2 LICENSING

A. All fees associated with the licensing shall be paid by the Owner.

B. All testing must be done on frequencies authorized by the FCC.

3.3 GROUNDING

A. Ground cable shields and equipment per Manufacturer's requirements.

B. Antenna mast shall be grounded per NFPA 70 NEC requirements, Section 27 05 26, "Grounding and Bonding for Communications Systems" and antenna manufacturer's requirements. Provide grounding blocks and surge protection for outside coaxial cabling. Bond the antenna mast to the existing lightning protection system.

3.4 APPROVAL TESTING

A. The local Fire Department will review plans and specifications. Upon acceptance, plans will be stamped to indicate approval. Stamped plans are required to be present at the acceptance test. Any field changes that occur during construction shall be incorporated into new As-Built plans, including any manufacturer's data sheets for any equipment changes not submitted in the original submittal. As-Built plans, if required due to system changes, shall be submitted to the local Fire Department for approval.

B. Tests shall be made using frequencies close to the frequencies used by the Fire Department and appropriate emergency services. If testing is done on the actual frequencies, then this testing must be coordinated with the local Fire Department unit. All testing must be done on frequencies authorized by the FCC. A valid FCC license will be required if testing is done on frequencies different from the police, fire or emergency medical frequencies.

C. Testing Procedures

1. Minimum Signal Strength: For testing system signal strength and quality, the testing shall be based on the delivered audio quality (DAQ) system. A DAQ level below 3.0 shall be considered a failed test for a given grid cell.
2. Measurements shall be made with the antenna held in a vertical position at 3 to 4 feet above the floor to simulate a typical portable radio worn on the belt or turnout coat pocket.

D. Final Acceptance Testing

1. All acceptance testing shall be done in the presence of a local Fire Department representative or by the local Fire Department unit at no expense to the City.
2. Small scale drawings (11 inch x 17 inch maximum) of the structure shall be provided by the Contractor to the Owner. The plans shall show each floor divided into the grids as described above, and the results of the pre-testing. Each grid shall be labeled to indicate the DAQ result from the final acceptance testing.
3. The Contractor shall provide the latest approved plans for the system, including any manufacture's data sheets for any equipment changes not submitted in the original submittal to the Owner.
4. Include testing results of the repeater (output wattage, gain level, etc) and connection to the fire alarm.

3.5 MAINTENANCE AND ANNUAL TESTING

A. Annual tests will be conducted by the local Fire Department unit or authorized company.

1. The re-testing will be done at no expense to the City or the appropriate emergency services departments as required in the original testing procedures.

B. Maintenance Contract

1. Maintenance contract with a Radio Service Provider in place with name of authorized company, who will provide a 24 hour by 7 day emergency response within two (2) hours after notification. The system shall be maintained in accordance with FCC requirements. The contract shall be for 5 years.
2. All tests shall be conducted, documented, and signed by a person in possession of a current FCC General Radio telephone Operator License, or a technician certification issued by the Association of Public-Safety Communications Officials International (APCO) or equivalent as determined by the local Fire Department.
3. Maintain a list of contact personnel with phone numbers at the radio repeater system cabinet. The contact personnel shall have knowledge of the building and the repeater system and be available to respond to the building in the case of an emergency.
4. Radio Service Provider maintenance contract shall include but not limited to:

a. Annual Test

1) All active components of the distributed antenna system, including but not limited to amplifier, power supplies, and back-up batteries, shall be tested a minimum of once every 12 months.
2) Amplifiers shall be tested to insure that the gain is the same as it was upon initial installation and acceptance. The original gain shall be noted and any change in gain shall be documented.
3) Back-up batteries and power supplies shall be tested under load for a period of 1 hour to verify that they will operate during an actual power outage.
4) Active components shall be checked to determine that they are operating within the manufacturer's specifications for their intended purpose.
5) Documentation of the test shall be maintained on site and a copy forwarded to the local Fire Department Radio Supervisor upon completion of the test.

5. Fire Department Radio personnel, after providing reasonable notice to the Owner or their representative, shall have the right to enter onto the property to conduct field testing to be certain that the required level of radio coverage is present.

END OF SECTION