GENERAL NOTES

1. DIMENSIONS INDICATED ON THE DRAWINGS AND OTHER EXISTING CONDITIONS INFORMATION ARE TAKEN FROM THE ORIGINAL BUILDING CONSTRUCTION DOCUMENTS. THE CONTRACTOR SHALL VERIFY ALL EXISTING CONDITIONS PRIOR TO PERFORMING AFFECTED AREAS OF THE WORK.
2. THE THIRD FLOOR OFFICES WILL BE VACATED WHILE STRUCTURAL REINFORCEMENTS ARE IN PROGRESS. THE CONTRACTOR SHALL IDENTIFY THE TIME PERIOD REQUIRED FROM THE INITIAL DELIVERY OF REPAIR MATERIALS INTO THE THIRD FLOOR TO THE FINAL CLEAN-UP WITHIN THE SUBMITTED PROJECT SCHEDULE. WORK WITHIN THE THIRD FLOOR OUTSIDE OF THAT TIME PERIOD WILL BE FORBIDDEN, WITH THE EXCEPTION OF TAKING FIELD MEASUREMENTS. AFTER STRUCTURAL WORK IS COMPLETE, ACCESS TO THE THIRD FLOOR WILL BE RETURNED TO THE USERS. IT IS INTENDED FOR THE REMAINDER OF THE BUILDING TO REMAIN OPERATIONAL THROUGHOUT THE CONSTRUCTION PERIOD. THE CONTRACTOR SHALL COORDINATE ALL ACTIVITIES WITH THE OWNER'S REPRESENTATIVE. ACCESS TO THE THIRD FLOOR FROM BELOW IS LIMITED TO PERSONNEL AS PERMITTED. THE CONTRACTOR SHALL SECURE ALL MATERIALS AND PROVIDE DELINEATION TO PREVENT ACCIDENTAL CONTACT WITH USERS OF THE BUILDING.
3. IT IS THE CONTRACTOR'S RESPONSIBILITY TO PROVIDE TEMPORARY PROTECTION FOR EXISTING CONSTRUCTION THROUGHOUT THE CONSTRUCTION PERIOD. EXISTING ITEMS DAMAGED FROM CONSTRUCTION ACTIVITIES, WEATHER, OR FROM HANDLING IN REMOVAL, STORAGE, AND REINSTALLATION SHALL BE REPLACED BY THE CONTRACTOR AT NO COST TO THE OWNER. REPLACEMENT ITEMS SHALL BE IDENTICAL OR SIMILAR PRODUCTS OF EQUAL QUALITY AS ACCEPTED BY THE OWNER.
4. CONDUCT LOCALIZED DEMOLITION IN SUCH FASHION TO MINIMIZE DISTURBANCE OF ADJACENT AREAS. ANY AREAS AFFECTED BY CONSTRUCTION ACTIVITIES SHALL BE RETURNED TO CONDITION AS EXISTED PRIOR TO CONSTRUCTION.
5. IT IS EXPECTED THAT AREAS OF ROOF DECK MAY BE REMOVED FOR MATERIALS AND EQUIPMENT ACCESS. THE CONTRACTOR SHALL PROVIDE ADDITIONAL DECKING AS REQUIRED TO WORK FROM THE THIRD FLOOR. MATERIAL STORAGE AND WORKERS' OPERATIONS SHALL BE DONE IN A MANNER THAT AVOIDS OVERLOADING AND EXCESSIVE DEFLECTIONS TO EXISTING CONSTRUCTION.
6. ANY ROOF OPENINGS SHALL BE CLOSED AT THE END OF EACH WORKING DAY. IT WILL BE THE CONTRACTOR'S RESPONSIBILITY TO PROTECT ALL INTERIOR FINISHES FROM DAMAGE DUE TO CONSTRUCTION OPERATIONS AND WEATHER EXPOSURE. ANY DAMAGE THAT OCCURS DURING THE CONSTRUCTION PERIOD THAT IS ATTRIBUTED TO THE CONTRACTOR'S OPERATIONS OR FROM INSUFFICIENT WEATHER PROTECTION SHALL BE REPAIRED AT THE CONTRACTOR'S EXPENSE.
7. IT IS THE CONTRACTOR'S RESPONSIBILITY TO TEMPORARILY DISCONNECT, RECONNECT, AND/OR RELOCATE UTILITIES SUCH AS WIRING AND/OR CONDUIT THAT PREVENTS THE INSTALLATION OF THE REINFORCING AS DETAILED HEREIN. COORDINATE WITH THE OWNER'S REPRESENTATIVE FOR ALL DISCONNECTION AND RELOCATION OF EXISTING UTILITIES.
8. WHERE NEW STEEL BEAMS ARE SPECIFIED, IT WILL BE NECESSARY TO CUT EXISTING STUDS THAT FRAME PARTITION WALLS BELOW THE EXISTING WOOD BEAMS. THESE PARTITION WALLS SHALL BE RECONSTRUCTED TO THE BOTTOM OF THE NEW STEEL BEAMS. SPLICING NEW STUDS TO EXISTING STUDS IS NOT ACCEPTABLE. EXISTING FULL HEIGHT STUDS SHALL BE RE-ATTACHED TO THE BOTTOM OF THE STEEL BEAM WITH DEFLECTION TRACKS OR CLIPS. IF REQUIRED, SISTER NEW, FULL HEIGHT STUDS TO EXISTING. REPLACE EXISTING FINISHES SUCH AS WALLS, CEILINGS, AND PAINT TO MATCH ADJACENT EXISTING CONDITIONS.
9. WHERE NEW STEEL BEAMS ARE SPECIFIED, IT WILL BE NECESSARY TO CUT EXISTING WOOD COLUMNS THAT SUPPORT WOOD BEAMS BELOW THE EXISTING ROOF FRAMING. PROVIDE TEMPORARY SUPPORTS FOR EXISTING ROOF FRAMING BEFORE CUTTING EXISTING LOAD-BEARING COLUMNS. MAINTAIN TEMPORARY SUPPORTS IN PLACE UNTIL NEW STEEL FRAMING IS SECURED AND ROOF FRAMING IS FULLY SUPPORTED.
10. AT THE SOUTHEAST CORNER OF THE ATTIC, EXISTING DUCTWORK AND INSULATION PREVENTS THE INSTALLATION OF THE NEW STEEL BEAM BELOW THE EXISTING WOOD BEAM. THE CONTRACTOR SHALL REMOVE, REROUTE, AND/OR RELOCATE THE DUCTWORK TO ALLOW FOR INSTALLATION OF THE NEW STEEL BEAM. COORDINATE WITH THE OWNER'S REPRESENTATIVE PRIOR TO THE DISCONNECTION AND RELOCATION OF DUCTWORK.
11. AFTER INSTALLATION OF BEAMS AND COLUMNS IS COMPLETE, INSTALL NEW GYPSUM BOARD SOFFITS TO CONCEAL NEW BEAMS BELOW EXISTING CEILING PLANES. MINIMIZE THE SIZE OF SOFFIT BY CONSTRUCTING IT AS TIGHT AS POSSIBLE AGAINST THE NEW STEEL BEAM. NEW GYPSUM SOFFITS SHALL MATCH EXISTING CEILING AND WALL PLANES AS MUCH AS POSSIBLE. TAPE EDGES AND SPACKLE SCREW HEADS FOR A SMOOTH SURFACE. PRIME AND PAINT TO MATCH EXISTING, ADJACENT SURFACES.
12. EXISTING SUSPENDED CEILING TILES FROM CEILINGS ADJACENT TO SOFFITS SHALL BE REMOVED AND SALVAGED FOR REINSTALLATION AFTER STRUCTURAL REINFORCEMENTS ARE COMPLETE. HANDLE CEILING COMPONENTS WITH CARE TO ALLOW REINSTALLATION. WHERE SALVAGED CEILING TILES ARE DAMAGED DURING REMOVAL OR STORAGE, PROVIDE NEW CEILING TILES TO MATCH EXISTING AT NO ADDITIONAL COST TO THE OWNER. PROVIDE NEW TRACK, HARDWARE, CEILING TILES, AND ANY REQUIRED ANCILLARY ITEMS FOR A COMPLETE CEILING SYSTEM IDENTICAL, OR OF SIMILAR PRODUCTS OF EQUAL QUALITY, TO THE EXISTING SUSPENDED CEILING TO REMAIN.

DESIGN NOTES

1. ROOF REINFORCEMENTS ARE DESIGNED FOR COMPLIANCE WITH THE SNOW LOAD PROVISIONS OF THE 2015 EDITION OF THE INTERNATIONAL BUILDING CODE AND THE 2010 EDITION OF @MINIMUM DESIGN LOADS FOR BUILDINGS AND OTHER STRUCTURES@ BY THE AMERICAN SOCIETY OF CIVIL ENGINEERS (ASCE7-10). SNOW LOADS UTILIZED ARE BASED ON THE FOLLOWING CRITERIA:
   A. GROUND SNOW LOAD Pg = 60 PSF
   B. FLAT ROOF SNOW LOAD Pf = 46.2 PSF
   C. SNOW EXPOSURE FACTOR Ce = 1.0
   D. SNOW IMPORTANCE FACTOR Is = 1.0
   E. THERMAL FACTOR Ct = 1.1
   F. UNBALANCED SNOW LOADS IN ACCORDANCE WITH ASCE 7-10.

WOOD FRAMING NOTES

1. REMOVE EXISTING ROOF DECK AS REQUIRED TO INSTALL REINFORCEMENTS, MATERIAL, AND EQUIPMENT. REMOVE EXISTING ROOF DECK TO PERMIT FULL 4FT X 8FT PANEL REPLACEMENT. REPLACEMENT ROOF DECK SHALL BE NEW PANELS AS FOLLOWS:
   A. APA RATED SHEATHING, 5/8@ OR 3/4" THICK PANELS TO MATCH EXISTING ADJACENT ROOFING TO REMAIN.
   B. MINIMUM SPAN RATING 40/20.
   C. EXPOSURE 1 OR EXPOSURE 2.
2. LAY OUT REPLACEMENT ROOF PANELS WITH THE LONG DIMENSION ACROSS SUPPORTS AND WITH SHORT ENDS CENTERED OVER A SUPPORT. FASTEN TO SUPPORTS WITH 10D NAILS. SPACE NAILS AT 6@ ON CENTER AT SUPPORTED PANEL EDGES AND AT 12@ ON CENTER AT INTERMEDIATE SUPPORTS.
3. PROVIDE FASTENERS FOR CONNECTING WOOD FRAMING AS INDICATED. WHERE NOT INDICATED, COMPLY WITH TABLE 2304.10.1 IN THE 2015 EDITION OF THE INTERNATIONAL BUILDING CODE.
4. PROPRIETARY WOOD CONNECTORS ARE IDENTIFIED AS PRODUCTS FROM SIMPSON STRONG-TIE. SUBSTITUTIONS REQUIRE APPROVAL. SUBMIT REQUESTED SUBSTITUTIONS FOR REVIEW WITH ALL PRODUCT DATA REQUIRED FOR STRUCTURAL EVALUATION. ALLOW 2 WEEKS FOR REVIEW. NOTE THAT CUSTOM SLOPED RAFTER HANGERS ARE REQUIRED. IT IS THE RESPONSIBILITY OF THE CONTRACTOR TO VERIFY ALL EXISTING GEOMETRY PRIOR TO ORDERING CUSTOM CONNECTORS. SUBMIT CUSTOM CONNECTION INFORMATION FOR REVIEW.
5. WHERE PROPRIETARY CONNECTORS ARE SPECIFIED, INSTALL IN ACCORDANCE WITH THE MANUFACTURER'S SPECIFICATIONS. USE ALL SPECIFIED FASTENERS WITHOUT SUBSTITUTION UNLESS OTHERWISE NOTED ON THE DRAWINGS. WHERE MORE THAN ONE FASTENER SPECIFICATION EXISTS, INSTALL THE MAXIMUM FASTENING.
6. NAILS SHALL COMPLY WITH ASTM F1667. PROVIDE NAILS OF THE FOLLOWING MINIMUM DIMENSIONS:
   A. 8d = 2-3/8@ LONG X 0.113@ DIAMETER
   B. 10d = 2-7/8@ LONG X 0.12@ DIAMETER
   C. AT ROOF DECK NAILING, USE 10d = 3@ LONG X 0.148@ DIAMETER.
   D. 16d = 3-1/4@ LONG X 0.148@ DIAMETER.
7. INSTALL TOENAILS AT AN ANGLE 30 DEGREES FROM THE AXIS OF THE SUPPORTED MEMBER. INSTALL WITH THE TIP LOCATED AT A DISTANCE OF 1/3 OF THE NAIL LENGTH FROM THE END OF THE SUPPORTED MEMBER.
8. LAG SCREWS SHALL COMPLY WITH ANSI/ASME B18.2.1. FOR 5/8@ DIAMETER LAG SCREWS, THE MAXIMUM PILOT HOLE FOR THE THREADED PORTION OF THE SCREW SHALL BE 13/32@.
9. NEW LUMBER UTILIZED FOR REINFORCEMENTS SHALL BE #2 GRADE OR BETTER OF SPRUCE-PINE-FIR GRADED BY NLGA.

STEEL FRAMING NOTES

1. ALL STEEL WORK SHALL CONFORM TO THE 14TH EDITION OF THE SPECIFICATION FOR STRUCTURAL STEEL BUILDINGS BY THE AMERICAN INSTITUTE OF STEEL CONSTRUCTION, ANSI/AISC 360-10.
2. ALL WELDING SHALL BE DONE BY A WELDER CERTIFIED BY THE AMERICAN WELDING SOCIETY FOR THE WELDING PROCEDURE AND POSITIONS UTILIZED.
3. ALL WELDING SHALL BE IN COMPLIANCE WITH AWS D1.1 STRUCTURAL WELDING - STEEL BY THE AMERICAN WELDING SOCIETY, LATEST EDITION.
4. NO FIELD WELDING IS PERMITTED IN THE ATTIC.
5. BOLTS USED TO CONNECT STEEL FRAMING MEMBERS SHALL BE IN COMPLIANCE WITH THE 2009 EDITION OF THE SPECIFICATION FOR STRUCTURAL JOINTS USING HIGH STRENGTH BOLTS BY THE RESEARCH COUNCIL ON STRUCTURAL CONNECTIONS.
6. BOLTS USED TO CONNECT STEEL FRAMING MEMBERS SHALL BE ASTM A325 BOLTS. INSTALL TO SNUG-TIGHT CONDITION UNLESS OTHERWISE INDICATED.
7. STRUCTURAL STEEL WIDE FLANGE SHAPES SHALL BE ASTM A992.
8. STRUCTURAL STEEL ANGLES AND PLATES SHALL BE ASTM A36.
9.

NO.	DATE	REVISION

MMA Leavitt Hall / Delano Auditorium
Structural Improvements and Reroofing
Castine, Maine BGS PROJECT # 3254

DRAWN BY SWW
CHK'D BY MAC
ISSUE DATE 8-10-21
PROJ. NO. 2020018

GENERAL NOTES

STATE OF MAINE
MICHAEL ALAN CUNNINGHAM
LICENSED PROFESSIONAL ENGINEER

Lincoln / Haney
Engineering Associates, Inc.
14 Maine Street, Suite 306A
Box 7
Brunswick, Maine 04011
Phone: 207-729-1061 Fax: 207-729-2941

S0.1

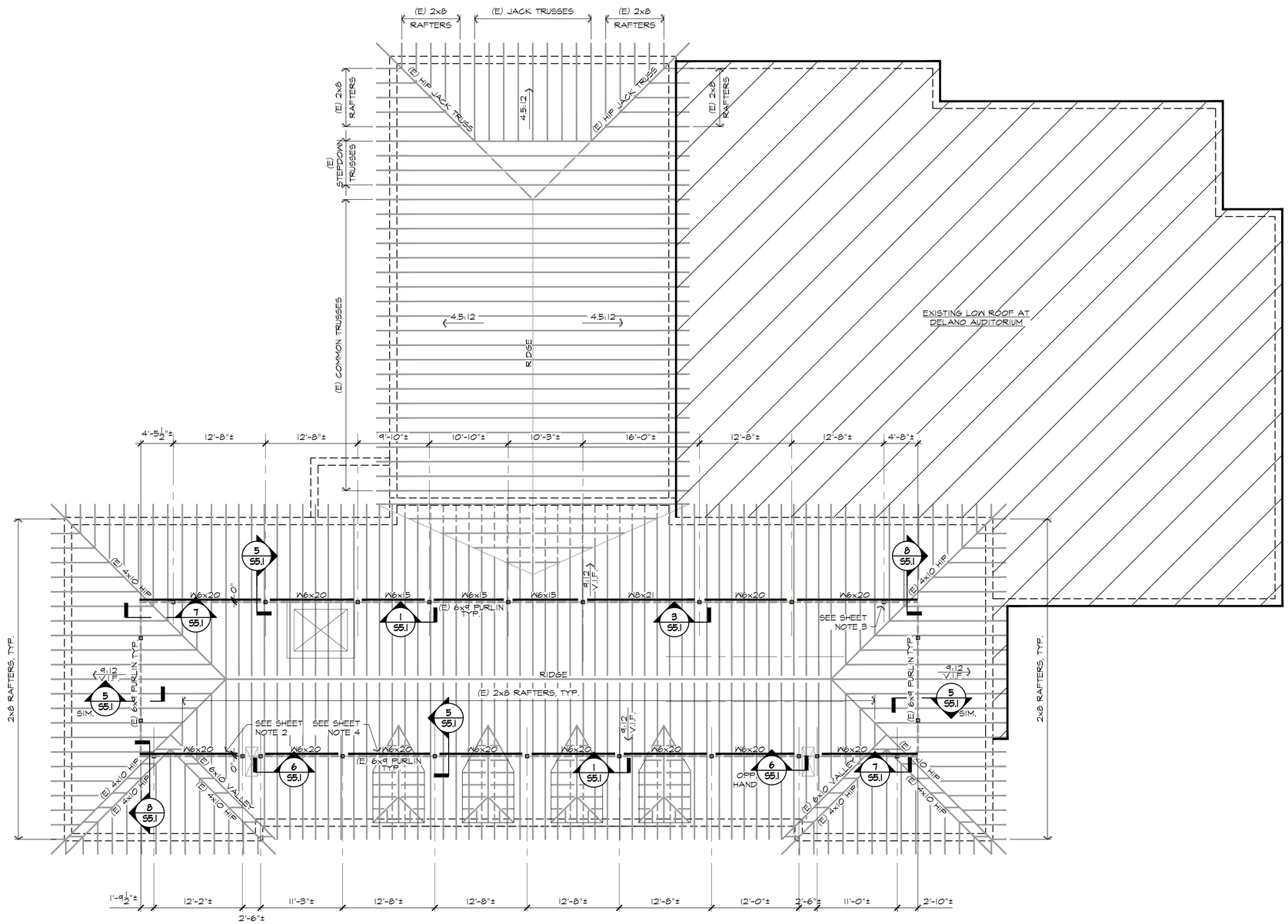

EXISTING HIGH ROOF FRAMING PLAN
1/8"=1'-0"

SHEET NOTES:

1. SEE GENERAL NOTES ON S0.1 FOR ADDITIONAL INFORMATION AND REQUIREMENTS.
2. EXISTING DUCTWORK CONFLICTS WITH NEW STEEL BEAM TO BE INSTALLED BELOW EXISTING PURLIN. G.C. SHALL BE RESPONSIBLE FOR RELOCATING OR REROUTING THE EXISTING DUCTWORK TO FACILITATE THE INSTALLATION OF THE STEEL BEAM.
3. G.C. SHALL BE RESPONSIBLE FOR TEMPORARILY SHORING THE EXISTING STRUCTURE TO CUT EXISTING WOOD COLUMN AND INSTALLING THE STEEL BEAM BELOW THE EXISTING PURLIN. SEE SECTION 7 ON S5.1 FOR ADDITIONAL INFORMATION (TYPICAL 4 LOCATIONS)
4. PROVIDE NEW SOFFIT AT NEW STEEL BEAM. MODIFY EXISTING SUSPENDED CEILING TILES AS REQUIRED. SEE GENERAL NOTES FOR ADDITIONAL INFORMATION & REQUIREMENTS.

NO.	DATE	REVISION

MMA Leavitt Hall / Delano Auditorium
Structural Improvements and Reroofing
Castine, Maine BGS PROJECT # 3254

DRAWN BY SWW
CHK'D BY MAC
ISSUE DATE 8-10-21
PROJ. NO. 2020018

EXISTING HIGH ROOF FRAMING PLAN

STATE OF MAINE
MICHAEL ALAN CUNNINGHAM
LICENSED PROFESSIONAL ENGINEER

Lincoln / Haney
Engineering Associates, Inc.
14 Maine Street, Suite 306A
Box 7
Brunswick, Maine 04011
Phone: 207-729-1061 Fax: 207-729-2941

S1.1

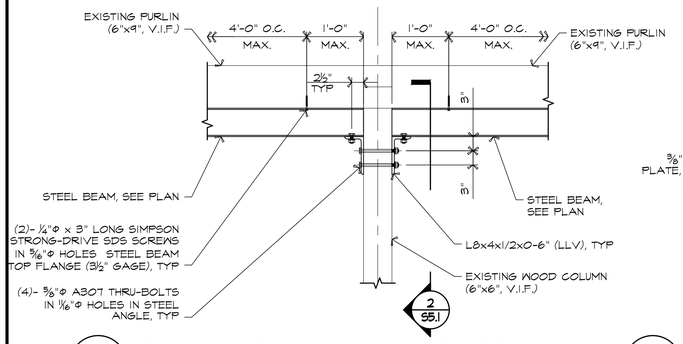

1 TYPICAL SECTION AT W6 SUPPORT

3/4"=1'-0"

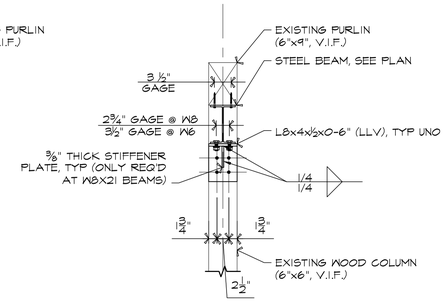

2 SECTION

3/4"=1'-0"

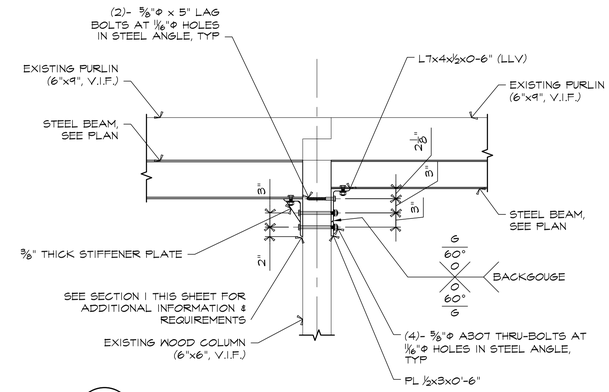

3 SECTION

3/4"=1'-0"

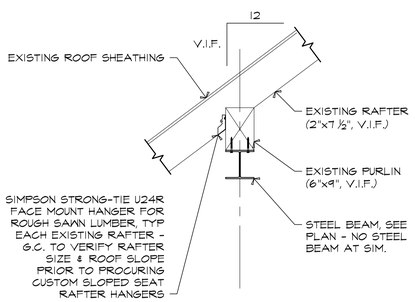

5 TYPICAL SECTION AT RAFTER SUPPORT

3/4"=1'-0"

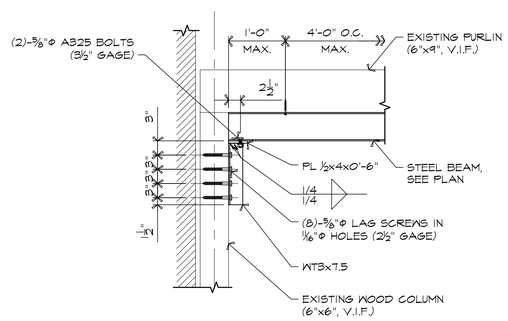

6 SECTION

3/4"=1'-0"

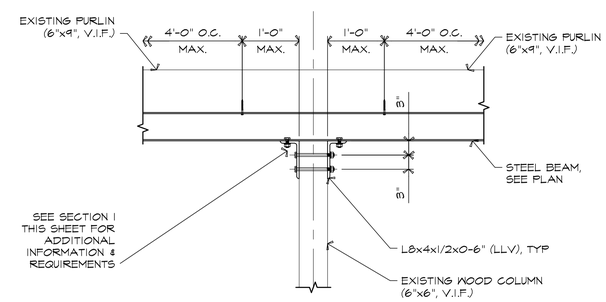

7 SECTION

3/4"=1'-0"

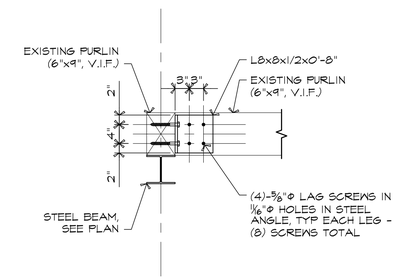

8 SECTION

3/4"=1'-0"

NO.	DATE	REVISION
2	8-26-20	REVISIONS FOR RTU-1

MMA Leavitt Hall / Delano Auditorium

Structural Improvements and Reroofing

Castine, Maine BGS PROJECT # 3254

DRAWN BY SWW
CHK'D BY MAC
ISSUE DATE 8-10-21
PROJ. NO. 2020.018

SECTIONS AND DETAILS

STATE OF MAINE
MICHAEL ALAN CUNNINGHAM
LICENSED PROFESSIONAL ENGINEER

Lincoln / Haney
Engineering Associates, Inc.
14 Maine Street, Suite 306A
Box 7
Brunswick, Maine 04011
Phone: 207-729-1061 Fax: 207-729-2941

S5.1