CODE REVIEW SUMMARY:

LIFE SAFETY CODE REVIEW BY SECTION: MAINE MUBEC, IBC and NFPA 101

	BUILDING FEATURE	REQUIRED / ALLOWED		PROVIDED	REFERENCE
1	**GENERAL INFORMATION**				
1.1	ORIGINAL YEAR OF CONSTRUCTION			CETA BUILDING, 1920	
1.2	USE			THE PLANNED MAINE DEPARTMENT OF INLAND FISHERIES AND WILDLIFE NEW HEADQUARTERS BUILDING WILL CONTAIN OFFICES, SMALL AND LARGE CONFERENCE ROOMS, A LABORATORY, AND STORAGE SPACE.	
1.3	CLASSIFICATION OF WORK:			NFPA 101: RECONSTRUCTION PLUS ADDITION; IEBC: LEVEL 3 ALTERATION PLUS ADDITION	NFPA 101, SECTIONS 43.2.2; IEBC SECTIONS 505 AND 507
1.4	TOTAL BUILDING CALCULATED OCCUPANT LOAD			770	
1.5	SUPPRESSION SYSTEM			NEW WET-PIPE SPRINKLER SYSTEM THROUGHOUT MAJORITY OF BUILDING. NEW DRY-PIPE SPRINKLER SYSTEM THROUGHOUT AREAS SUBJECT TO FREEZING TEMPERATURES (AT ATTIC AND SPACES EXPOSED TO THE EXTERIOR).	
1.6	FIRE DETECTION / ALARM SYSTEM			NEW ADDRESSABLE FIRE ALARM SYSTEM WITH HORN/STROBE NOTIFICATION	
1.7	APPROVED EQUIVALENCIES			NOT APPLICABLE	
2	**APPLICABLE FIRE/LIFE SAFETY CODES**				
2.1	MAINE UNIFORM BUILDING AND ENERGY CODE WHICH INCLUDES:				
2.1.1		INTERNATIONAL BUILDING CODE (IBC), 2015 EDITION			
2.1.2		INTERNATIONAL EXISTING BUILDING CODE (IEBC), 2015 EDITION			
		INTERNATIONAL ENERGY CONSERVATION CODE (IECC) 2015			
2.2	MAINE STATE FIRE MARSHAL ADOPTED NFPA CODES:				
2.2.1		NFPA 1, FIRE CODE, 2018 EDITION			
2.2.2		NFPA 10, STANDARD FOR PORTABLE FIRE EXTINGUISHERS, 2018 EDITION			
2.2.3		NFPA 13, STANDARD FOR THE INSTALLATION OF SPRINKLER SYSTEMS, 2016 EDITION			
2.2.4		NFPA 24, STANDARD FOR THE INSTALLATION OF PRIVATE SERVICE MAINS AND THEIR APPURTENANCES, 2013 EDITION			
2.2.5		NFPA 72, NATIONAL FIRE ALARM AND SIGNALING CODE, 2019 EDITION			
2.2.6		NFPA 80, STANDARD FOR FIRE DOORS AND OTHER OPENING PROTECTIVES, 2019 EDITION			
2.2.7		NFPA 101, THE LIFE SAFETY CODE, 2018 EDITION			
2.2.8		NFPA 110, STANDARD FOR EMERGENCY AND STANDBY POWER SYSTEMS, 2022 EDITION			
2.3	2.3.AMERICANS WITH DISABILITIES ACT STANDARDS (ADA)				
3	**USE AND OCCUPANCY**				
3.1	OCCUPANCY CLASSIFICATIONS			IBC: MIXED, NONSEPARATED OCCUPANCIES OF ASSEMBLY, GROUP A-3; BUSINESS, GROUP B; AND STORAGE, GROUP S-1 NFPA 101: MULTIPLE, MIXED (NON-SEPARATED) OCCUPANCIES OF ASSEMBLY, BUSINESS, AND STORAGE	IBC, SECTIONS 303, 304, AND 311; NFPA 101, SECTIONS 6.1.2.1, 6.1.11.1, AND 6.1.13.1
4	**SPECIAL DETAILED REQUIREMENTS**				
4.1	ELEVATOR				
4.1.1		FIRE PROTECTION	SPRINKLERS REQUIRED IN ELEVATOR MACHINE ROOM, ELEVATOR [LANDINGS;LOBBIES], AND ELEVATOR SHAFT PIT AREA. NO SPRINKLER AT TOP OF ELEVATOR SHAFT HOISTWAY.	SPRINKLERS IN ELEVATOR MACHINE ROOM, ELEVATOR, AND ELEVATOR SHAFT PIT AREA.	IBC, SECTIONS 3006.1, 3006.2, 3006.3, 3006.4
4.1.1.1			SMOKE DETECTORS REQUIRED FOR ELEVATOR RECALL, FIREFIGHTER SERVICE AND FIRE ALARM SYSTEM INITIATION IN ELEVATOR MACHINE ROOM AND ELEVATOR LANDINGS; LOBBIES. NO SMOKE DETECTORS IN ELEVATOR SHAFT PIT OR AT TOP OF ELEVATOR SHAFT HOISTWAY.	SMOKE DETECTORS LOCATED IN ELEVATOR MACHINE ROOM AND ELEVATOR.	IBC, SECTIONS 3006.1, 3006.2, 3006.3, 3006.4
4.1.2		ELEVATOR LANDINGS TWO-WAY COMMUNICATION SYSTEM	A TWO-WAY COMMUNICATION SYSTEM IS REQUIRED AT THE LANDING SERVING EACH ELEVATOR ON EACH ACCESSIBLE FLOOR THAT IS ONE OR MORE STORIES ABOVE OR BELOW THE LEVEL OF EXIT DISCHARGE.	TWO-WAY COMMUNICATION SYSTEM PROVIDED AT THE LANDING OF THE BASEMENT, SECOND, AND THIRD FLOOR.	IBC, SECTION 1009.8; NFPA 101, SECTION 7.2.12.1
4.1.3		AMBULANCE STRETCHER	ELEVATOR CARS SERVING BUILDINGS FOUR OR MORE STORIES ABOVE THE GRADE PLANE ARE REQUIRED TO BE SIZED TO ACCOMMODATE AMBULANCE STRETCHER.	NOT REQUIRED	IBC, SECTION 3002.4
4.1.4		ELEVATOR HOISTWAY OPENING PROTECTION	NOT REQUIRED FOR A SPRINKLERED BUILDING THAT IS NOT A HIGH-RISE OF THE OCCUPANCY TYPES PRESENT IN THE BUILDING.	NOT REQUIRED	IBC, SECTION 3006.2
4.2	ASSEMBLY OCCUPANCY LIFE SAFETY EVALUATION	REQUIRED TO BE PERFORMED WHERE THE OCCUPANT LOAD OF AN ASSEMBLY OCCUPANCY EXCEEDS 6,000.		NOT REQUIRED: ASSEMBLY OCCUPANT LOAD = 240	NFPA 101, SECTION 12.1.7.3
5	**GENERAL BUILDING HEIGHTS AND**				
5.1	BUILDING HEIGHT	TYPE IIB & IIIB: 75 FEET (WITH SPRINKLER INCREASES)		44' - 6"	IBC, TABLE 504.3
5.2	BUILDING NUMBER OF STORIES	GROUP A-3, IIB & IIIB: 3 STORIES; GROUP B, IIB & IIIB: 4 STORIES; GROUP S-1, IIB & IIIB: 3 STORIES		EXISTING BUILDING & ADDITION: 3 STORIES ABOVE GRADE	IBC, TABLE 504.4
5.3	BUILDING AREA	GROUP A-3, IIB & IIIB: 28,000 SF; GROUP B, IIB: 69,000 SF; GROUP B, IIIB: 57,000 SF; GROUP S-1, IIB: 78,000 SF; GROUP S-1, IIIB: 76,500 SF		EXISTING BUILDING & ADDITION: 17,585 SF (NO FRONTAGE INCLUDED)	IBC, TABLE 506.2
5.1	CONSTRUCTION TYPE	TABLE 601 AND SECTION 602.2, 602.3	EXISTING: TYPE III-B ADDITIONS: TYPE II-B	TABLE 8.2.1.2 EXISTING: III-000 ADDITION: II-000	
6	**BUILDING TYPE OF CONSTRUCTION**				
6.1	TYPE OF CONSTRUCTION				
6.1.1		TYPE IIB	NO FIRE RESISTANCE RATING REQUIREMENTS FOR BUILDING ELEMENTS.		IBC, TABLE 601
6.1.2		TYPE IIIB	EXTERIOR LOAD-BEARING WALLS REQUIRED TO HAVE 2-HOUR FIRE RESISTANCE RATING.		IBC, TABLE 601
7	**FIRE AND SMOKE PROTECTION FEATURES**				
7.1	EXTERIOR EXPOSURE PROTECTION	TYPE IIB AND IIIB BUILDINGS REQUIRE EXTERIOR WALLS TO BE RATED WITH 1-HOUR FIRE RESISTANCE FOR 30 FEET OR LESS FIRE SEPARATION DISTANCES FROM OTHER BUILDINGS.		ALL EXTERIOR WALLS ARE GREATER THAN 30 FEET FROM ANY ADJACENT BUILDING OR PROPERTY LINE.	IBC, TABLE 602
7.1.1		STAIR ENCLOSURES WITH EXTERIOR WALLS AT <180 DEGREES		EXTERIOR WALLS WITHIN 10 FEET OF NONRATED WALL PROVIDED WITH 1-HOUR FIRE RESISTANCE RATING.	IBC, SECTION 1023.7; NFPA 101, SECTION 7.2.2.5.2.1
7.2	INTERIOR FIRE-RESISTANCE RATINGS				
7.2.1		EXIT STAIR ENCLOSURES	2-HOUR RATED CONNECTING 4 STORIES OR MORE.	INTERIOR EXIT STAIRWAYS ARE 2-HOUR RATED WHERE SERVING 4 STORIES (3 ABOVE GRADE, 1 BASEMENT STORY) AND 1-HOUR RATED WHERE SERVING LESS THAN 4 STORIES.	IBC, SECTION 713.4; NFPA 101, SECTION 7.1.3.2.1
7.2.2		FIRE WALLS	2-HOUR RATED FOR TYPE II CONSTRUCTION; 3-HOUR RATED FOR TYPE III.		IBC, TABLE 706.4
7.2.3		ELEVATOR SHAFTS	2-HOUR RATED CONNECTING 4 STORIES OR MORE	ELEVATOR SHAFTS ARE 2-HOUR RATED WHERE SERVING 4 STORIES (3 ABOVE GRADE, 1 BASEMENT STORY) AND 1-HOUR RATED WHERE SERVIING LESS THAN 4 STORIES.	IBC, SECTION 713.4; NFPA 101, SECTION 8.6.5
7.2.4		CORRIDORS	NO RATING REQUIRED IN A FULLY SPRINKLERED BUILDING FOR THE OCCUPANCIES PRESENT IN THE BUILDING.	NOT REQUIRED: BUILDING IS FULLY SPRINKLERED	IBC, TABLE 1020.1; NFPA 101, SECTIONS 12.3.6, 38.3.6, AND 42.3.6
7.2.5		ELEVATOR MACHINE ROOM	REQUIRED TO HAVE A FIRE-RESISTANCE RATING NO LESS THAN THE REQUIRED RATING OF THE HOISTWAY ENCLOSURE SERVED BY THE MACHINERY.	ELEVATOR MACHINE ROOMS ARE RATED TO MATCH THE REQUIRED RATING OF THE ELEVATOR SHAFTS.	IBC, SECTION 3005.4
7.2.6		STRUCTURAL ELEMENTS	SUPPORTING CONSTRUCTION FOR A FIRE BARRIER SHALL BE PROTECTED TO AFFORD THE REQUIRED FIRE-RESISTANCE RATING OF THE FIRE BARRIER SUPPORTED.	CONSTRUCTION SUPPORTING FIRE BARRIERS WILL BE PROTECTED WITH THE SAME FIRE-RESISTANCE RATING.	IBC, SECTION 707.5.1
7.2.7		SHAFTS	1-HOUR RATED CONNECTING 3 STORIES.	SHAFTS ARE 1-HOUR RATED WHERE SERVING 3 STORIES (3 ABOVE GRADE).	IBC, SECTION 713.4; NFPA 101, SECTION 8.6.5

	BUILDING FEATURE	REQUIRED/ALLOWED		PROVIDED	REFERENCE
8	**INTERIOR FINISHES**				
8.1	INTERIOR WALL AND CEILING FINISHES	IBC: SPRINKLERED EXIT ENCLOSURES - CLASS B MINIMUM; SPRINKLERED EXIT ACCESS CORRIDORS - CLASS B MINIMUM; SPRINKLERED ENCLOSED SPACES - CLASS C MINIMUM	NFPA 101: SPRINKLERED EXITS - CLASS B; SPRINKLERED EXIT ACCESS CORRIDORS - CLASS B; SPRINKLERED OTHER SPACES - CLASS B OR C	INTERIOR WALL AND CEILING FINISHES ARE CLASS B FOR EXIT ENCLOSURES AND EXIT ACCESS CORRIDORS. FINISHES ARE CLASS C FOR ALL OTHER ROOMS AND ENCLOSED SPACES.	IBC, TABLE 803.11; NFPA 101, TABLE A.10.2.2
9	**FIRE PROTECTION SYSTEMS**				
9.1	AUTOMATIC SPRINKLER SYSTEMS	REQUIRED THROUGHOUT BUILDING FOR ASSEMBLY OCCUPANCIES		AUTOMATIC SPRINKLER SYSTEM THROUGHOUT.	IBC, SECTION 903.2; NFPA 101, SECTION 12.3.5
9.2	FIRE ALARM AND DETECTION SYSTEMS	REQUIRED FOR BUSINESS OCCUPANCIES FOR BUILDINGS THREE OR MORE STORIES IN HEIGHT.		NEW ADDRESSABLE FIRE ALARM SYSTEM WITH HORN/STROBE NOTIFICATION PROVIDED.	IBC, SECTION 907.2; NFPA 101, SECTION 38.3.4.1
9.3	PORTABLE FIRE EXTINGUISHERS	REQUIRED FOR OCCUPANCIES PRESENT		PROVIDED: SEE AE SHEETS	IBC, SECTION 906.1; NFPA 101, SECTION 38.3.5
9.4	FIRE DEPARTMENT CONNECTIONS	REQUIRED TO BE LOCATED SO THAT FIRE APPARATUS AND HOSE WILL NOT OBSTRUCT ACCESS TO THE BUILDING FOR OTHER FIRE APPARTUS.		PROVIDED: SEE FX SHEETS	IBC, SECTION 912.2
10	**MEANS OF EGRESS**				
10.1	OCCUPANT LOAD	IBC:	NFPA 101:	CALCULATED OCCUPANT LOAD: SEE G-108-G-111	IBC, TABLE 1004.1.2; NFPA 101, TABLE 7.3.1.2
		STORAGE/MECHANICAL ROOMS: 300 GROSS	UNCONCENTRATED ASSEMBLY: 15 NET		
		EXHIBIT MUSEUM: 30 NET	BUSINESS USE: 150 GROSS		
		UNCONCENTRATED ASSEMBLY: 15 NET	COLLOBORATION ROOMS (GREATER THAN 450 SF): 15 GROSS		
		BUSINESS AREAS: 100 GROSS	COLLABORATION ROOMS (LESS THAN OR EQUAL TO 450 SF): 30 GROSS		
		INDUSTRIAL AREAS: 100 GROSS	GENERAL INDUSTRIAL: 100 GROSS		
10.2	CAPACITY FACTORS	0.3" PER PERSON FOR STAIRS; 0.2" PER PERSON FOR HORIZONTAL COMPONENTS			IBC, SECTION 1005.3; NFPA 101, SECTION 7.3.3.1
10.3	NUMBER OF EXITS	IBC: 2 EXITS PER STORY REQUIRED	NFPA 101: 2 EXITS PER STORY REQUIRED	PROVIDED: 2 MEANS OF EGRESS PER STORY	IBC, TABLE 1006.3.1; NFPA 101, SECTION 7.4.1
10.4	REQUIRED CLEAR WIDTHS				
10.4.1	DOORS	IBC: 32" MINIMUM	NFPA 101: 32"MINIMUM	PROVIDED: 32" MINIMUM	IBC, SECTION 1010.1.1; NFPA 101, SECTION 7.2.1.2.3
10.4.2	CORRIDOR	IBC: 44" MINIMUM FOR OCCUPANCIES PRESENT IN BUILDING	NFPA 101: 44" MINIMUM FOR BUSINESS OCCUPANCY SERVING AN OCCUPANT LOAD OF MORE THAN 50	PROVIDED: 44" MINIMUM	IBC, TABLE 1020.2; NFPA 101, SECTIONS 12.2.3.8 AND 38.2.3.2
10.4.3	STAIR	IBC: 44" MINIMUM WHEN OCCUPANCY LOAD IS GREATER THAN 50	NFPA 101: 44" MINIMUM WHEN OCCUPANCY LOAD IS GREATER THAN 50	PROVIDED: 44" MINIMUM	IBC, SECTION 1011.2; NFPA 101, 7.2.2.2.1.2
10.5	REMOTENESS OF EGRESS	IBC: 1/3 THE DIAGONAL OF THE FULLY SPRINKLERED BUILDING	NFPA 101: 1/3 THE DIAGONAL OF THE FULLY SPRINKLERED BUILDING	PROVIDED: SEPARATION OF EGRESS BY A MINIMUM OF 1/3 THE DIAGONAL	IBC, SECTION 1007.1.1; NFPA 101, SECTION 7.5.1.3.3
10.6	EGRESS TRAVEL PATHS				
10.6.1	TRAVEL DISTANCE (SPRINKLERED)	IBC: 250 FT FOR GROUP A AND S-1 OCCUPANCY; 300 FEET FOR GROUP B	NFPA 101: 250 FT FOR NEW ASSEMBLY; 300 FT FOR NEW BUSINESS	PROVIDED: 250 FT OR LESS	IBC, TABLE 1017.2; NFPA 101, TABLE A.7.6
10.6.2	COMMON PATH OF TRAVEL	IBC: 100 FT FOR GROUP B AND S OCCUPANCY; 75 FT FOR GROUP A	NFPA 101: 75 FT FOR NEW ASSEMBLY; 100 FT FOR NEW BUSINESS	PROVIDED: 75 FT OR LESS	IBC, TABLE 1006.2.1; NPFA 101, TABLE A.7.6
10.6.3	DEAD END CORRIDOR LENGTH (SPRINKLERED)	IBC: 50 FT FOR GROUP B AND S OCCUPANCY; 20 FT FOR GROUP A	NFPA 101: 20 FT FOR NEW ASSEMBLY; 50 FT FOR NEW BUSINESS	PROVIDED: ALL DEAD END CORRIDORS ARE LESS THAN 20 FT.	IBC, SECTION 1020.4; NFPA 101, TABLE A.7.6
10.7	DISCHARGE FROM EXITS	IBC: EXITS SHALL DISCHARGE DIRECTLY TO THE EXTERIOR	NFPA 101: EXITS SHALL DISCHARGE DIRECTLY TO THE EXTERIOR	PROVIDED: EXITS DISCHARGE DIRECTLY TO THE EXTERIOR	IBC, SECTION 1028.1; NFPA 101, SECTION 7.7
10.8	STAIR RELATED REQUIREMENTS				
10.8.1	HEADROOM	IBC: 80" MINIMUM	NFPA 101: 80" MINIMUM	PROVIDED: 80" MINIMUM	IBC, SECTION 1011.3; NFPA 101, TABLE 7.2.2.2.1.1(a)
10.8.2	TREADS AND RISERS	IBC: RISERS SHALL BE 7" MAXIMUM (4" MINIMUM) AND TREADS SHALL BE 11" MINIMUM	NFPA 101: RISERS SHALL BE 7" MAXIMUM (4" MINIMUM) AND TREADS SHALL BE 11" MINIMUM	PROVIDED: VARIES, NONE EXCEED MAXIMUM OF 7"	IBC, SECTION 1011.5.2; NFPA 101, TABLE 7.2.2.2.1.1(a)
10.8.3	HANDRAILS	IBC: HANDRAILS SHALL BE LOCATED ON BOTH SIDES OF THE STAIR, BETWEEN 34" AND 38" ABOVE STAIR TREAD, AND MUST COMPLY WITH TYPE I OR TYPE II GRASPABILITY	NFPA 101: HANDRAILS SHALL BE LOCATED ON BOTH SIDES OF THE STAIR AND BETWEEN 34" AND 38" ABOVE STAIR TREAD	PROVIDED: HANDRAILS ON BOTH SIDES BETWEEN 34" AND 38"	IBC, SECTIONS 1011.11, 1014.2, AND 104.3; NFPA 101, SECTIONS 7.2.2.4.1.1 AND 7.2.2.4.5.1
10.8.4	GUARD RAILS	IBC: REQUIRED ON LANDINGS GREATER THAN 30" HIGH. GUARD HEIGHT TO BE 42" HIGH MINIMUM	NFPA 101: REQUIRED ON LANDINGS GREATER THAN 30" HIGH. GUARD HEIGHT TO BE 42" HIGH MINIMUM	PROVIDED: GUARD RAILS WITH A MINIMUM HEIGHT OF 42"	IBC, SECTIONS 1015.2 AND 1015.3; NFPA 101, SECTIONS 7.1.8 AND 7.2.2.4.6.2
10.8.5	VERTICAL RISE	IBC: STAIRS SHALL NOT HAVE A VERTICAL RISE GREATER THAN 12 FT BETWEEN LANDINGS	NFPA 101: MAXIMUM HEIGHT OF 12 FT BETWEEN LANDINGS	PROVIDED: VARIES, NO LANDINGS EXCEED 12 FT OF VERTICAL RISE	IBC, SECTION 1011.8; NFPA 101, TABLE 7.2.2.2.1.1(a)

1

NO.	DATE	DESCRIPTION	BY
1	02/13/2025	ADDENDUM NO.1	HMG
		REVISIONS	

LICENSED ARCHITECT TYLER J. BAILER No. 4362 1-29-25 STATE OF MAINE

DRAWN BY: HMG
CHECK BY: TGB
NO.
DATE 01/29/2025

DEPARTMENT OF INLAND FISHERIES & WILDLIFE

TITLE: NEW OFFICE HEADQUARTERS

LOCATION: AUGUSTA, ME

TITLE THIS DWG: CODE COMPLIANCE SUMMARY SHEET

OAK POINT ASSOCIATES
231 Main Street, Biddeford, Maine 04005 207.283.0193

DRAWING NO. G-102

SHEET NO. 5 OF 239

2/13/2025 2:14:06 PM
C:\Users\Heidi\Documents\22205.04-IF&W-LIFE_SAFETY_v22_hgardner\YBPQX.rvt

GENERAL NOTES

1. SEE SHEET G-108 FOR GENREAL NOTES.

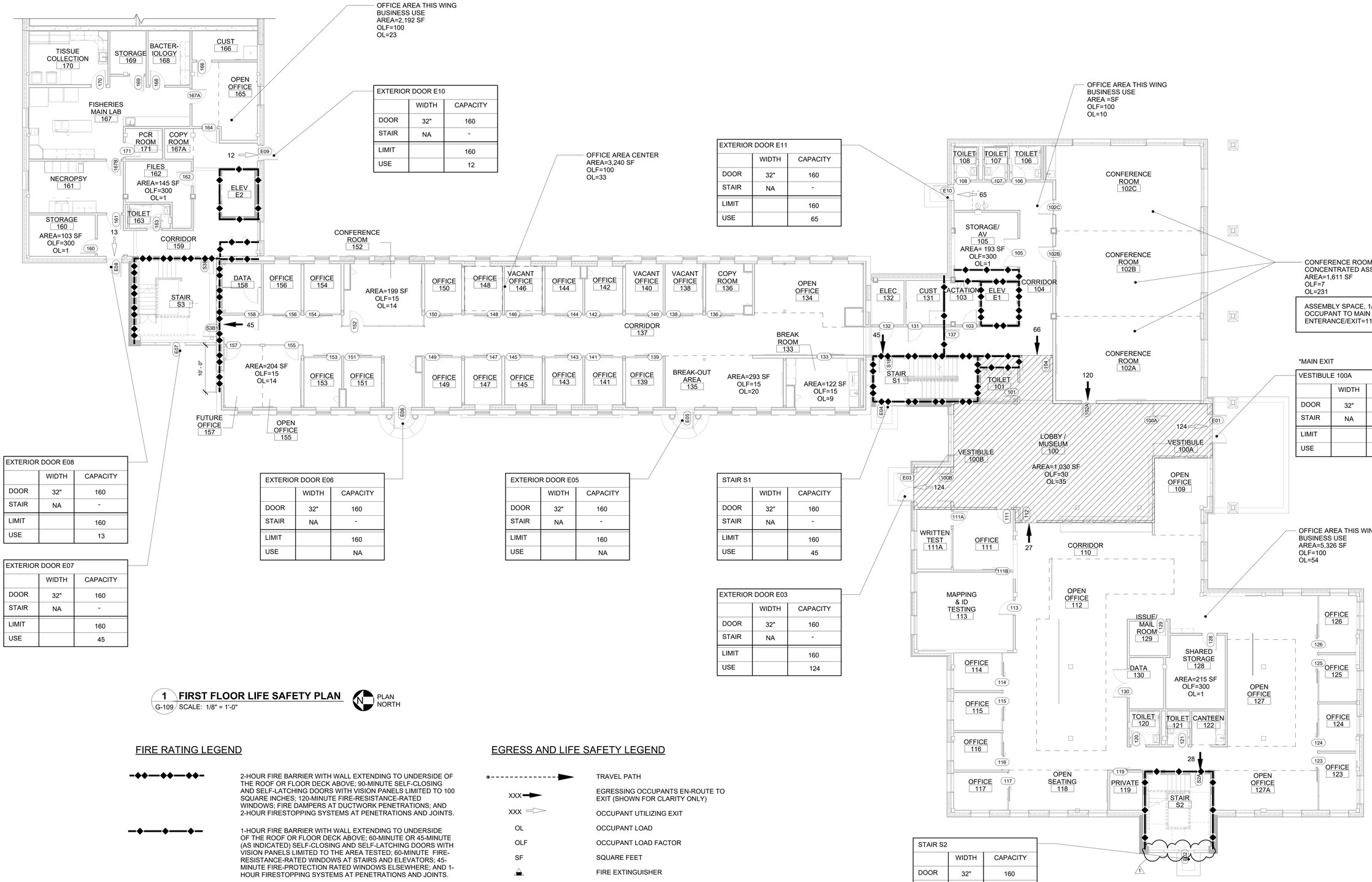

EXTERIOR DOOR E10	WIDTH	CAPACITY
DOOR	32"	160
STAIR	NA	-
LIMIT		160
USE		12

EXTERIOR DOOR E11	WIDTH	CAPACITY
DOOR	32"	160
STAIR	NA	-
LIMIT		160
USE		65

VESTIBULE 100A	WIDTH	CAPACITY
DOOR	32"	160
STAIR	NA	-
LIMIT		160
USE		124

EXTERIOR DOOR E08	WIDTH	CAPACITY
DOOR	32"	160
STAIR	NA	-
LIMIT		160
USE		13

EXTERIOR DOOR E07	WIDTH	CAPACITY
DOOR	32"	160
STAIR	NA	-
LIMIT		160
USE		45

EXTERIOR DOOR E06	WIDTH	CAPACITY
DOOR	32"	160
STAIR	NA	-
LIMIT		160
USE		NA

EXTERIOR DOOR E05	WIDTH	CAPACITY
DOOR	32"	160
STAIR	NA	-
LIMIT		160
USE		NA

STAIR S1	WIDTH	CAPACITY
DOOR	32"	160
STAIR	NA	-
LIMIT		160
USE		45

EXTERIOR DOOR E03	WIDTH	CAPACITY
DOOR	32"	160
STAIR	NA	-
LIMIT		160
USE		124

STAIR S2	WIDTH	CAPACITY
DOOR	32"	160
STAIR	NA	-
LIMIT		160
USE		29

1 FIRST FLOOR LIFE SAFETY PLAN
G-109 SCALE: 1/8" = 1'-0"

PLAN NORTH

FIRE RATING LEGEND

2-HOUR FIRE BARRIER WITH WALL EXTENDING TO UNDERSIDE OF THE ROOF OR FLOOR DECK ABOVE; 90-MINUTE SELF-CLOSING AND SELF-LATCHING DOORS WITH VISION PANELS LIMITED TO 100 SQUARE INCHES; 120-MINUTE FIRE-RESISTANCE-RATED WINDOWS; FIRE DAMPERS AT DUCTWORK PENETRATIONS; AND 2-HOUR FIRESTOPPING SYSTEMS AT PENETRATIONS AND JOINTS.

1-HOUR FIRE BARRIER WITH WALL EXTENDING TO UNDERSIDE OF THE ROOF OR FLOOR DECK ABOVE; 60-MINUTE OR 45-MINUTE (AS INDICATED) SELF-CLOSING AND SELF-LATCHING DOORS WITH VISION PANELS LIMITED TO THE AREA TESTED; 60-MINUTE FIRE-RESISTANCE-RATED WINDOWS AT STAIRS AND ELEVATORS; 45-MINUTE FIRE-PROTECTION RATED WINDOWS ELSEWHERE; AND 1-HOUR FIRESTOPPING SYSTEMS AT PENETRATIONS AND JOINTS.

1-HOUR FLOOR/CEILING OR ROOF/CEILING ASSEMBLY ABOVE HATCHED AREA WITH 1-HOUR FIRESTOPPING SYSTEMS AT PENETRATIONS AND JOINTS.

EGRESS AND LIFE SAFETY LEGEND

TRAVEL PATH

XXX — EGRESSING OCCUPANTS EN-ROUTE TO EXIT (SHOWN FOR CLARITY ONLY)

XXX — OCCUPANT UTILIZING EXIT

OL — OCCUPANT LOAD

OLF — OCCUPANT LOAD FACTOR

SF — SQUARE FEET

FIRE EXTINGUISHER

GRAPHIC SCALE

1/8"=1'-0" 8' 4' 0 8' 16'

CHECK GRAPHIC SCALE BEFORE USING

NO.	DATE	DESCRIPTION	BY
1	02/13/2025	ADDENDUM NO.1	HMG

REVISIONS

DRAWN BY: CET
CHECK BY: TGB
NO.
DATE 01/29/2025

LICENSED ARCHITECT TYLER G. BERGER No. 4362 STATE OF MAINE 1-29-25

DEPARTMENT OF INLAND FISHERIES & WILDLIFE

TITLE: NEW OFFICE HEADQUARTERS
LOCATION: AUGUSTA, ME
TITLE THIS DWG: FIRST FLOOR LIFE SAFETY PLAN

OAK POINT ASSOCIATES
231 Main Street, Biddeford, Maine 04005 207.283.0193

DRAWING NO. G-109
SHEET NO. 12 OF 239

2/13/2025 2:14:13 PM
C:\Users\Heidi\Documents\22205.04-IF&W-LIFE_SAFETY_v22_hgardner\BPQX.rvt

EXTERIOR DOOR E13		
	WIDTH	CAPACITY
DOOR	32"	160
STAIR	NA	-
LIMIT		160
USE		6

EXTERIOR DOOR E14		
	WIDTH	CAPACITY
DOOR	66"	330
STAIR	NA	-
LIMIT		330
USE		49

STAIR S3		
	WIDTH	CAPACITY
DOOR	32"	160
STAIR	44"	146
LIMIT		146
USE		44

STAIR S1		
	WIDTH	CAPACITY
DOOR	32"	160
STAIR	44"	146
LIMIT		146
USE		49

STAIR S2		
	WIDTH	CAPACITY
DOOR	32"	160
STAIR	44"	146
LIMIT		146
USE		60

GENERAL NOTES

1. SEE SHEET G-108 FOR GENREAL NOTES.

1 SECOND FLOOR LIFE SAFETY PLAN

G-110 SCALE: 1/8" = 1'-0"

PLAN NORTH

FIRE RATING LEGEND

2-HOUR FIRE BARRIER WITH WALL EXTENDING TO UNDERSIDE OF THE ROOF OR FLOOR DECK ABOVE; 90-MINUTE SELF-CLOSING AND SELF-LATCHING DOORS WITH VISION PANELS LIMITED TO 100 SQUARE INCHES; 120-MINUTE FIRE-RESISTANCE-RATED WINDOWS; FIRE DAMPERS AT DUCTWORK PENETRATIONS; AND 2-HOUR FIRESTOPPING SYSTEMS AT PENETRATIONS AND JOINTS.

1-HOUR FIRE BARRIER WITH WALL EXTENDING TO UNDERSIDE OF THE ROOF OR FLOOR DECK ABOVE; 60-MINUTE OR 45-MINUTE (AS INDICATED) SELF-CLOSING AND SELF-LATCHING DOORS WITH VISION PANELS LIMITED TO THE AREA TESTED; 60-MINUTE FIRE-RESISTANCE-RATED WINDOWS AT STAIRS AND ELEVATORS; 45-MINUTE FIRE-PROTECTION RATED WINDOWS ELSEWHERE; AND 1-HOUR FIRESTOPPING SYSTEMS AT PENETRATIONS AND JOINTS.

1-HOUR FLOOR/CEILING OR ROOF/CEILING ASSEMBLY ABOVE HATCHED AREA WITH 1-HOUR FIRESTOPPING SYSTEMS AT PENETRATIONS AND JOINTS.

EGRESS AND LIFE SAFETY LEGEND

TRAVEL PATH

XXX EGRESSING OCCUPANTS EN-ROUTE TO EXIT (SHOWN FOR CLARITY ONLY)

XXX OCCUPANT UTILIZING EXIT

OL OCCUPANT LOAD

OLF OCCUPANT LOAD FACTOR

SF SQUARE FEET

FIRE EXTINGUISHER

GRAPHIC SCALE

1/8"=1'-0" 8' 4' 0 8' 16'

CHECK GRAPHIC SCALE BEFORE USING

NO.	DATE	DESCRIPTION	BY
1	02/13/2025	ADDENDUM NO.1	HMG

REVISIONS

DRAWN BY: CET
CHECK BY: TGB
NO.
DATE 01/29/2025

LICENSED ARCHITECT TYLER G. BUSH No. 4362 STATE OF MAINE 1-29-25

DEPARTMENT OF INLAND FISHERIES & WILDLIFE

TITLE NEW OFFICE HEADQUARTERS

LOCATION AUGUSTA, ME

TITLE THIS DWG. SECOND FLOOR LIFE SAFETY PLAN

OAK POINT ASSOCIATES

231 Main Street, Biddeford, Maine 04005 207.283.0193

DRAWING NO. G-110

SHEET NO. 13 OF 239

2/13/2025 2:14:21 PM
C:\Users\Heidi\Documents\22205.04-IF&W-LIFE_SAFETY_v22_hgardner\BPQX.rvt

GENERAL NOTES

1. SEE SHEET G-108 FOR GENREAL NOTES.

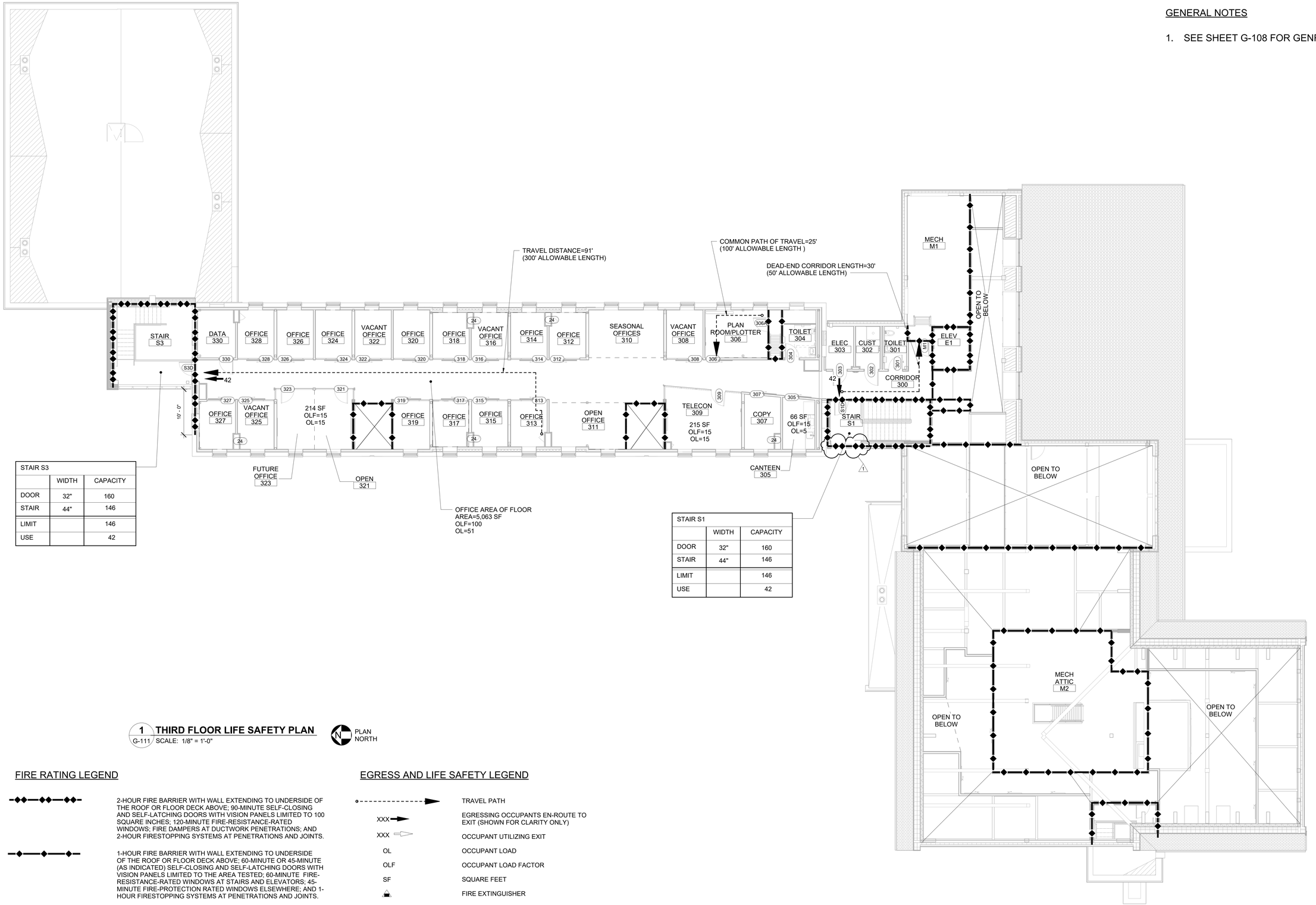

STAIR S3		
	WIDTH	CAPACITY
DOOR	32"	160
STAIR	44"	146
LIMIT		146
USE		42

STAIR S1		
	WIDTH	CAPACITY
DOOR	32"	160
STAIR	44"	146
LIMIT		146
USE		42

1 THIRD FLOOR LIFE SAFETY PLAN
G-111 SCALE: 1/8" = 1'-0"

PLAN NORTH

FIRE RATING LEGEND

2-HOUR FIRE BARRIER WITH WALL EXTENDING TO UNDERSIDE OF THE ROOF OR FLOOR DECK ABOVE; 90-MINUTE SELF-CLOSING AND SELF-LATCHING DOORS WITH VISION PANELS LIMITED TO 100 SQUARE INCHES; 120-MINUTE FIRE-RESISTANCE-RATED WINDOWS; FIRE DAMPERS AT DUCTWORK PENETRATIONS; AND 2-HOUR FIRESTOPPING SYSTEMS AT PENETRATIONS AND JOINTS.

1-HOUR FIRE BARRIER WITH WALL EXTENDING TO UNDERSIDE OF THE ROOF OR FLOOR DECK ABOVE; 60-MINUTE OR 45-MINUTE (AS INDICATED) SELF-CLOSING AND SELF-LATCHING DOORS WITH VISION PANELS LIMITED TO THE AREA TESTED; 60-MINUTE FIRE-RESISTANCE-RATED WINDOWS AT STAIRS AND ELEVATORS; 45-MINUTE FIRE-PROTECTION RATED WINDOWS ELSEWHERE; AND 1-HOUR FIRESTOPPING SYSTEMS AT PENETRATIONS AND JOINTS.

1-HOUR FLOOR/CEILING OR ROOF/CEILING ASSEMBLY ABOVE HATCHED AREA WITH 1-HOUR FIRESTOPPING SYSTEMS AT PENETRATIONS AND JOINTS.

EGRESS AND LIFE SAFETY LEGEND

	TRAVEL PATH
XXX	EGRESSING OCCUPANTS EN-ROUTE TO EXIT (SHOWN FOR CLARITY ONLY)
XXX	OCCUPANT UTILIZING EXIT
OL	OCCUPANT LOAD
OLF	OCCUPANT LOAD FACTOR
SF	SQUARE FEET
	FIRE EXTINGUISHER

GRAPHIC SCALE

1/8"=1'-0" 8' 4' 0 8' 16'

CHECK GRAPHIC SCALE BEFORE USING

NO.	DATE	DESCRIPTION	BY
1	02/13/2025	ADDENDUM NO.1	HMG

REVISIONS

LICENSED ARCHITECT TYLER BRUSER 1-29-25 STATE OF MAINE

DRAWN BY: CET
CHECK BY: TGB
NO.
DATE 01/29/2025

DEPARTMENT OF INLAND FISHERIES & WILDLIFE

TITLE NEW OFFICE HEADQUARTERS

LOCATION AUGUSTA, ME

TITLE THIS DWG. THIRD FLOOR LIFE SAFETY PLAN

OAK POINT ASSOCIATES

231 Main Street, Biddeford, Maine 04005 207.283.0193

DRAWING NO. G-111

SHEET NO. 14 OF 239

2/13/2025 2:14:29 PM
C:\Users\HeidiDocuments\22205.04-IF&W-LIFE_SAFETY_v22_hgardnerYBPQX.rvt

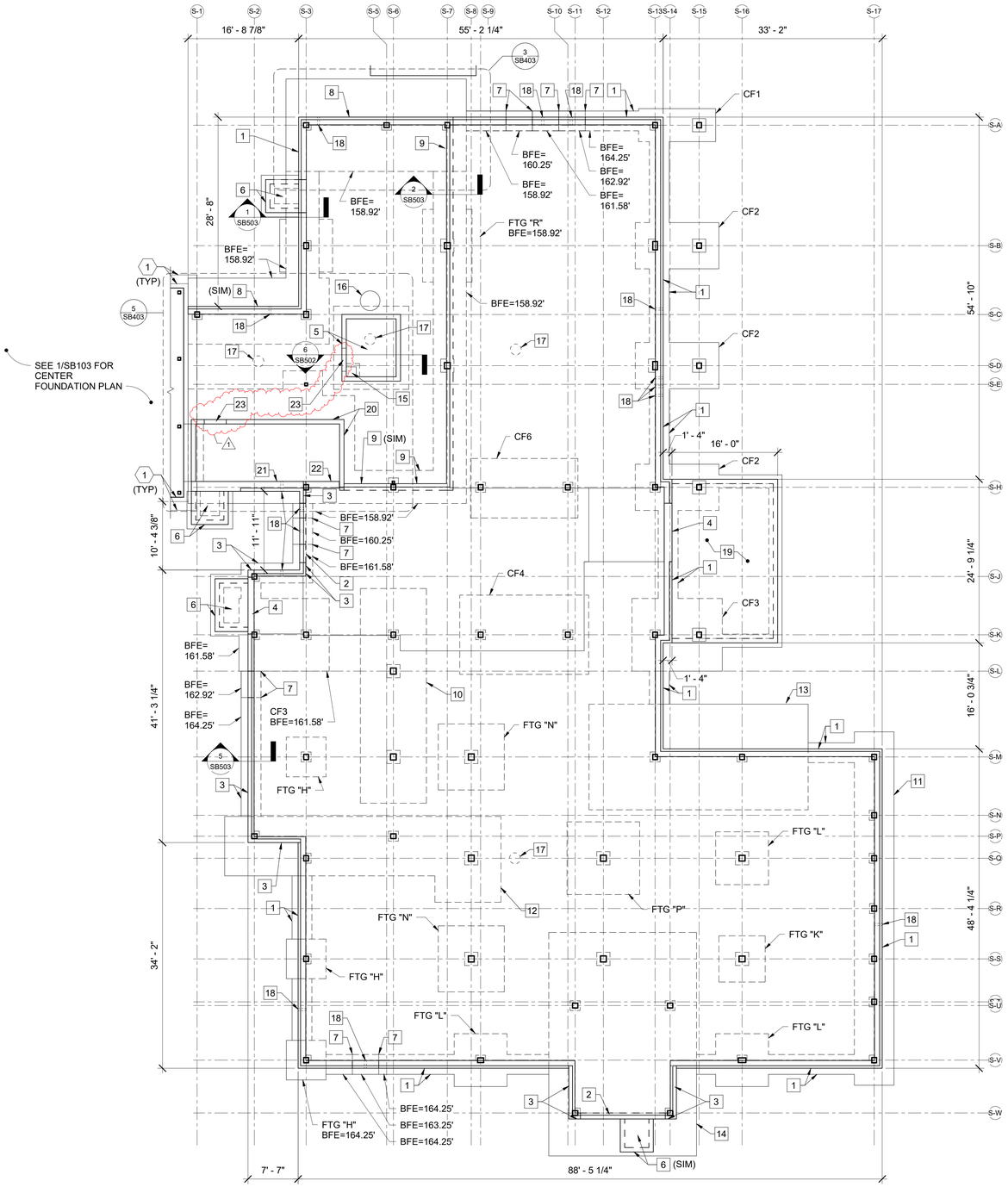

1 SOUTH ADDITION FOUNDATION PLAN

SB101, SB103 — SB104 — SCALE: 1/8" = 1'-0"

PLAN NORTH

GENERAL NOTES (THIS SHEET ONLY)

1. REFER TO SHEET SB101 FOR SLAB CONTROL JOINTS AND EXPANSION JOINT LAYOUTS.
2. REFER TO SHEET SB102 FOR FOOTING SCHEDULES.
3. REFER TO SHEET SF604 FOR COLUMN BASE PLATE DETAILS.
4. REFER TO PLUMBING DRAWINGS FOR FLOOR DRAIN LOCATIONS IN SLABS. PITCH SLAB-ON-GROUND TO FLOOR DRAINS AS REQUIRED.
5. BOTTOM OF THE EXTERIOR AND INTERIOR CONTINUOUS FOUNDATION WALL FOOTINGS, EXTERIOR SPREAD FOOTINGS, AND EXTERIOR COMBINED FOOTINGS SHALL BE 164.25', UNLESS NOTED OTHERWISE.
6. BOTTOM OF ISOLATED AND COMBINED INTERIOR COLUMN FOOTINGS SHALL BE 164.25', UNLESS NOTED OTHERWISE.
7. TOP OF EXTERIOR FOUNDATION WALL SHALL BE 170.00', UNLESS NOTED OTHERWISE. COORDINATE INTEGRAL SHELF ELEVATIONS WITH FOUNDATION PLAN AND DETAILS.
8. REFER TO SHEET SB404 FOR ENLARGED PIER PLANS.
9. PROVIDE FOUNDATION WALL AND SLAB-ON-GROUND CONSTRUCTION JOINTS AT EACH EDGE OF CONCRETE PLACEMENT IN ACCORDANCE WITH DETAILS 3/SB101 AND 5/SB502.
10. REFER TO SHEET S-006 FOR COLUMN GRID SPACING.
11. PROVIDE CONTROL JOINTS IN FOUNDATION WALLS LOCATED BELOW STONE VENEER CONTROL JOINTS AND AT A MAXIMUM SPACING OF 20'-0". COORDINATE WITH ARCHITECTURAL WALL ELEVATIONS FOR LOCATION OF CONTROL JOINTS. CONTROL JOINTS SHALL BE MADE BY 3/4" x 3/4" INSERTS ATTACHED TO FOUNDATION WALL FORMWORK.

EXISTING KEYNOTES (THIS SHEET ONLY)

1 — EXISTING TAPERED FOUNDATION WALL

KEYNOTES (THIS SHEET ONLY)

1 — 1'-2" REINFORCED CONCRETE FOUNDATION WALL AND FOOTING. SEE DETAIL 1/SB501 (SIMILAR).
2 — 11" REINFORCED CONCRETE FOUNDATION WALL AT CURTAIN WALL. SEE DETAIL 5/SB503 (SIMILAR).
3 — 11" REINFORCED CONCRETE FOUNDATION WALL AND FOOTING. SEE DETAIL 5/SB503.
4 — REINFORCED CONCRETE FOUNDATION WALL AT STOREFRONT.
5 — REINFORCED CONCRETE ELEVATOR PIT. SEE DETAIL 6/SB502.
6 — REINFORCED CONCRETE STOOP. SEE DETAIL 10/SB501 (SIMILAR).
7 — STEP FOOTING. SEE DETAIL 4/SB502.
8 — 1'-2" REINFORCED CONCRETE RETAINING WALL AND FOOTING. SEE DETAIL 1/SB503.
9 — 1'-0" REINFORCED CONCRETE RETAINING WALL AND FOOTING. SEE DETAIL 2/SB503.
10 — MAT FOOTING 1. SEE DETAIL 1/SB402.
11 — MAT FOOTING 2. SEE DETAIL 2/SB402.
12 — MAT FOOTING 3. SEE DETAIL 3/SB402
13 — MAT FOOTING 4. SEE DETAIL 4/SB402.
14 — MAT FOOTING 5. SEE DETAIL 2/SB403.
15 — 1'-6"x1'-6"x2'-0" DEEP REINFORCED CONCRETE SUMP PIT. SEE DETAIL 7/SB502.
16 — SUMP PIT. COORDINATE WITH PLUMBING PLANS AND DETAIL 8/P-501.
17 — RADON PIT. SEE DETAIL 3/SB502.
18 — CORE/SLEEVE HOLE IN FOUNDATION WALL FOR UTILITY PENETRATION. COORDINATE EXACT SIZE, LOCATION, ELEVATION, AND QUANTITY WITH CIVIL, PLUMBING, AND ELECTRICAL PLANS.
19 — REINFORCED CONCRETE STOOP AT GRANITE ENTRY PLAZA. COORDINATE WITH CIVIL AND LANDSCAPE PLANS. SEE DETAIL 10/SB501 (SIMILAR) AND 7/L-501.
20 — 8" REINFORCED CONCRETE FOUNDATION WALL. SEE DETAIL 5/SB501 (SIMILAR).
21 — 1'-6" REINFORCED CONCRETE FOUNDATION WALL. SEE DETAIL 6/SB503.
22 — 1'-0" REINFORCED CONCRETE FOUNDATION WALLL. SEE DETAIL 1/SB503 (SIMILAR).
23 — AT OPENING IN REINFORCED CONCRETE WALL, PROVIDE ADDITIONAL (2) # 5'S HORIZONTAL ABOVE OPENING. EXTEND REINFORCING 1'-0" PAST EDGES OF OPENING.

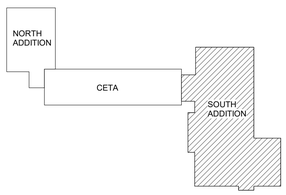

KEYPLAN
NOT TO SCALE

PLAN NORTH

GRAPHIC SCALE

1/8"=1'-0" — 8' 4' 0 8' 16'

CHECK GRAPHIC SCALE BEFORE USING

NO.	DATE	DESCRIPTION	BY
1	02/13/2025	ADDENDUM NO. 1	DNM

REVISIONS

STATE OF MAINE — DAVID N. MARTIN — No. 5622 — LICENSED PROFESSIONAL ENGINEER

DRAWN BY: MJC
CHECK BY: DNM
NO.
DATE 01/29/2025

DEPARTMENT OF INLAND FISHERIES & WILDLIFE

TITLE: NEW OFFICE HEADQUARTERS
LOCATION: AUGUSTA, ME
TITLE THIS DWG: SOUTH ADDITION FOUNDATION PLAN

OAK POINT ASSOCIATES
ARCHITECTURE ■ ENGINEERING ■ PLANNING
231 Main Street, Biddeford, Maine 04005 207.283.0193

DRAWING NO. SB104
SHEET NO. 55 OF 239

2/13/2025 9:09:23 AM
C:\Users\MattDocuments\22205.04-IF&W-STRUCTURAL_v22_mdemons3RMZ5.rvt

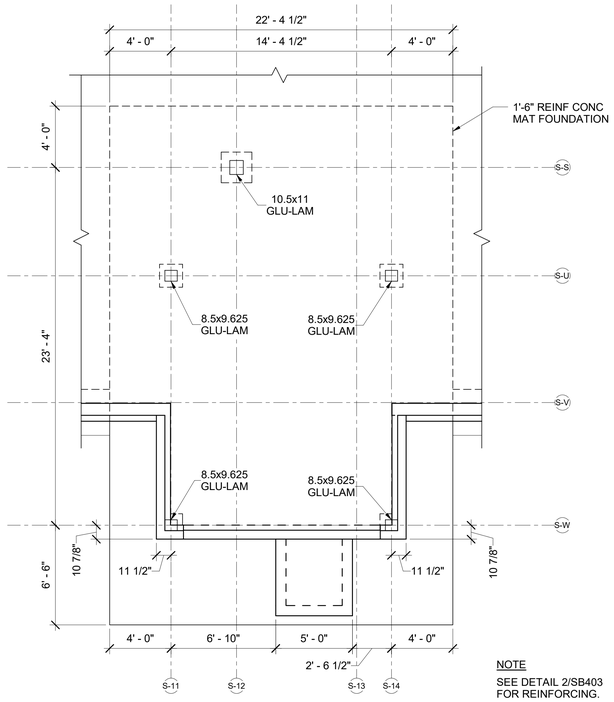

NOTE
SEE DETAIL 2/SB403 FOR REINFORCING.

1 ENLARGED MAT 5 PLAN
SB403 SCALE: 1/4" = 1'-0"
SB104

PLAN NORTH

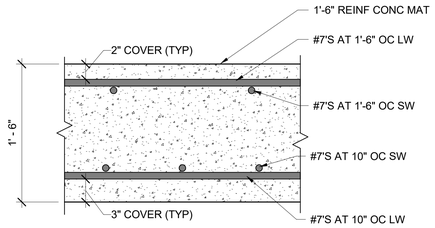

2 MAT 5 REINF PLACEMENT DETAIL
SB403 SCALE: 1 1/2" = 1'-0"
SB403

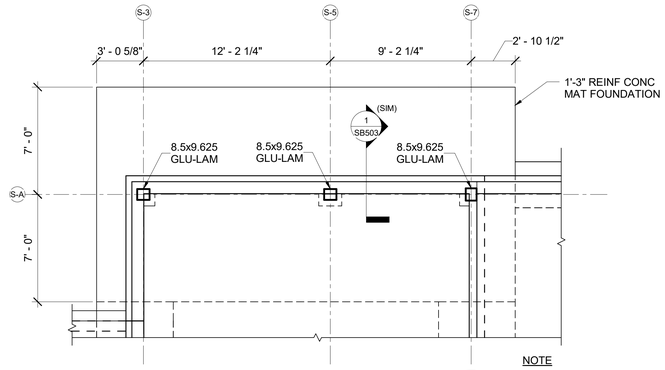

NOTE
SEE DETAIL 4/SB403 FOR REINFORCING.

3 ENLARGED MAT 6 PLAN
SB403 SCALE: 1/4" = 1'-0"
SB104

PLAN NORTH

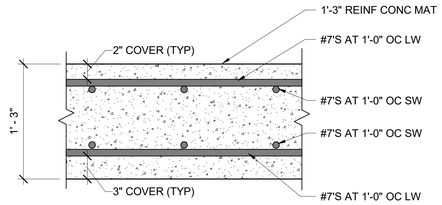

4 MAT 6 REINF PLACEMENT DETAIL
SB403 SCALE: 1 1/2" = 1'-0"
SB403

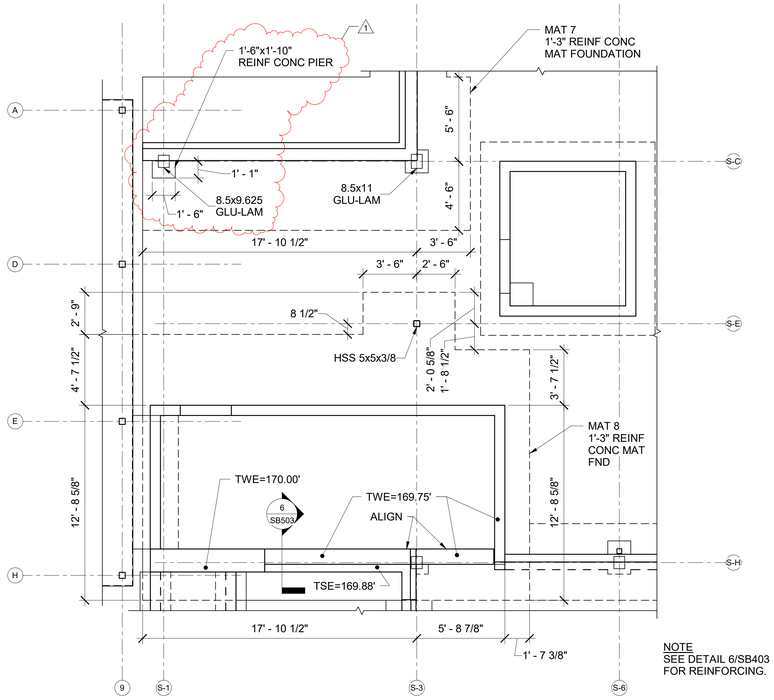

NOTE
SEE DETAIL 6/SB403 FOR REINFORCING.

5 ENLARGED MAT 7/MAT 8 PLAN
SB403 SCALE: 1/4" = 1'-0"
SB104

PLAN NORTH

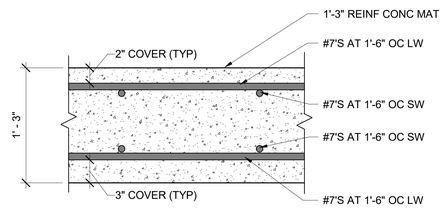

6 MAT 7/MAT 8 REINF PLACEMENT DETAIL
SB403 SCALE: 1 1/2" = 1'-0"
SB403

GRAPHIC SCALES

1-1/2"=1'-0" 1' 8" 4" 0 1'

1/4"=1'-0" 4' 2' 0 4' 8'

CHECK GRAPHIC SCALES BEFORE USING

NO.	DATE	DESCRIPTION	BY
1	02/13/2025	ADDENDUM NO. 1	DNM

REVISIONS

STATE OF MAINE
DAVID N. MARTIN
No. 9662
LICENSED
PROFESSIONAL ENGINEER

DRAWN BY: MJC
CHECK BY: DNM
NO.
DATE 01/29/2025

DEPARTMENT OF INLAND FISHERIES & WILDLIFE

TITLE: NEW OFFICE HEADQUARTERS

LOCATION: AUGUSTA, ME

TITLE THIS DWG: ENLARGED MAT FOOTING PLANS 2

OAK POINT ASSOCIATES
ARCHITECTURE ■ ENGINEERING ■ PLANNING
231 Main Street, Biddeford, Maine 04005 207.283.0193

DRAWING NO. SB403

SHEET NO. 59 OF 239

2/13/2025 1:04:01 PM
C:\Users\MattDocuments\22205.04-IF&W-STRUCTURAL_v22_mclemons3RMZ5.rvt

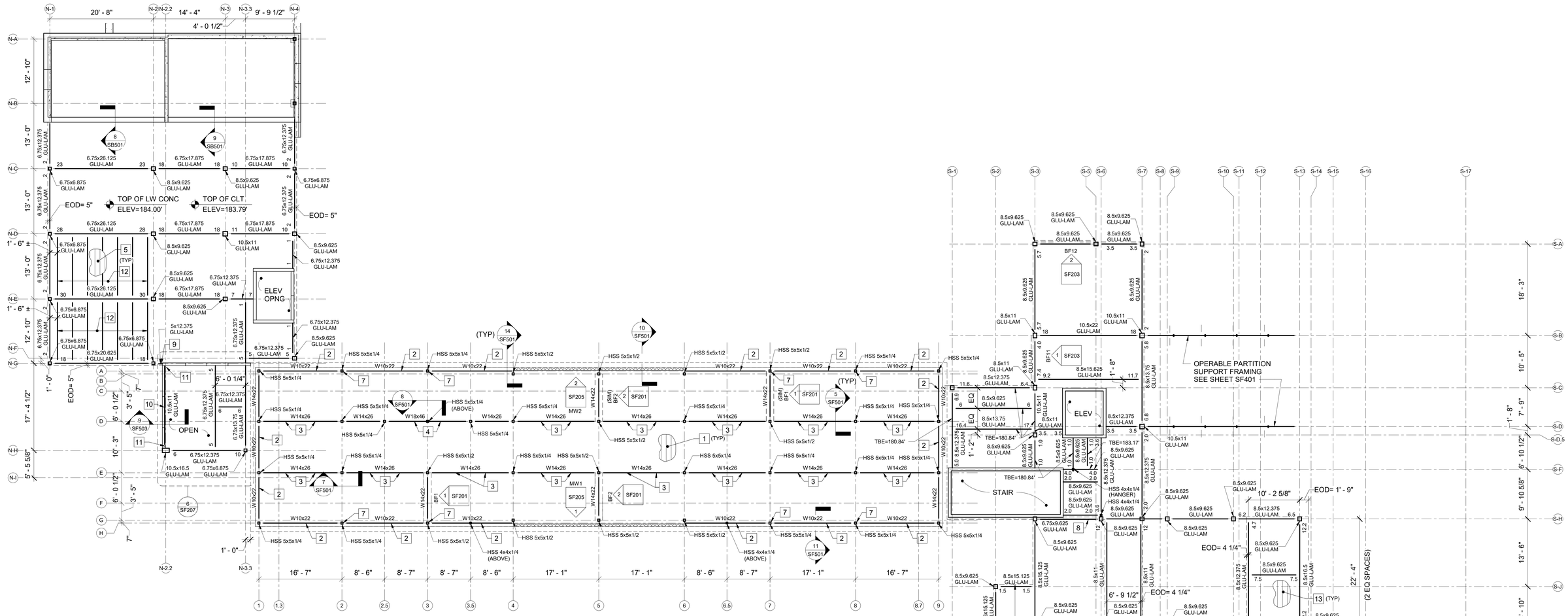

1 SECOND FLOOR FRAMING PLAN

SF102 SF103 SCALE: 1/8" = 1'-0"

PLAN NORTH

NOTES

1. TOP OF STEEL ELEVATION = 181.25', UNLESS NOTED OTHERWISE.
2. TOP OF GLU-LAM BEAM ELEVATION = 183.17', UNLESS NOTED OTHERWISE.

KEYNOTES (THIS SHEET ONLY)

1. 2" x 16 GA GALVANIZED COMPOSITE STEEL DECK WITH 5" LIGHTWEIGHT CONCRETE SLAB WITH 6x6, W2.0xW2.0 WELDED WIRE FABRIC.
2. LATERAL FORCE RESISTING COLLECTOR.
3. BEAM WEB PENETRATION 1. LOCATE CENTER OF PENETRATION 5'-6" FROM EACH END OF BEAM. SEE DETAIL 12/SF501.
4. BEAM WEB PENETRATION 2. LOCATE CENTER OF PENETRATION 6'-0" FROM END OF BEAM. SEE DETAIL 13/SF501.
5. 5-PLY CLT FLOOR PANEL WITH ACOUSTICAL MAT AND 2" LIGHTWEIGHT CONCRETE TOPPING SLAB.
6. 5-PLY CLT ROOF PANEL.
7. LATERAL FORCE COLLECTOR CONNECTION. SEE DETAIL 8/SF502.
8. ALIGN WEST FACE OF BEAM WITH ADJACENT 8.5x9.625 GLU-LAM BEAM ALONG COLUMN LINE S-H.
9. ALIGN INTERIOR FACE OF 5x12.375 GLU-LAM BEAM WITH INTERIOR FACE OF CLT WALL PANEL. BEAM END REACTION = 1.5 KIPS. COORDINATE WITH CONNECTION SCHEDULE ON SHEET SF601.
10. ORIENT 10.5x11 GLU-LAM BEAM WITH 10.5" FACE VERTICAL. TOP OF BEAM ELEVATION = 183.79'.
11. PROVIDE BEAM END SHEAR CONNECTION, SIMPSON STRONG-TIE CJT6Z. ORIENT CONNECTION HORIZONTALLY.
12. 6.5x11 GLU-LAM BEAMS AT 3'-0" ON-CENTER. BEAMS MUST ALIGN BELOW HIGH DENSITY STORAGE SYSTEM RAILS. COORDINATE BEAM PLACEMENT WITH RAIL LAYOUT. BEAM END REACTION = 3.5 KIPS. COORDINATE WITH CONNECTION SCHEDULE ON SHEET SF601.
13. 5-PLY CLT FLOOR PANEL.

GRAPHIC SCALE

1/8"=1'-0" 8' 4' 0 8' 16'

CHECK GRAPHIC SCALE BEFORE USING

NO.	DATE	DESCRIPTION	BY
1	02/13/2025	ADDENDUM NO. 1	DNM

REVISIONS

STATE OF MAINE DAVID N. MARTIN No. 9685 LICENSED PROFESSIONAL ENGINEER

DRAWN BY: MJC
CHECK BY: DNM
NO.
DATE 01/29/2025

DEPARTMENT OF INLAND FISHERIES & WILDLIFE

TITLE: NEW OFFICE HEADQUARTERS
LOCATION: AUGUSTA, ME
TITLE THIS DWG: SECOND FLOOR FRAMING PLAN

OAK POINT ASSOCIATES
ARCHITECTURE ■ ENGINEERING ■ PLANNING
231 Main Street, Biddeford, Maine 04005 207.283.6193

DRAWING NO. SF102
SHEET NO. 69 OF 239

2/12/2025 1:10:54 PM
C:\Users\Matt\Documents\22205.04-IF&W-STRUCTURAL_v22_mdemons3RMZ5.rvt

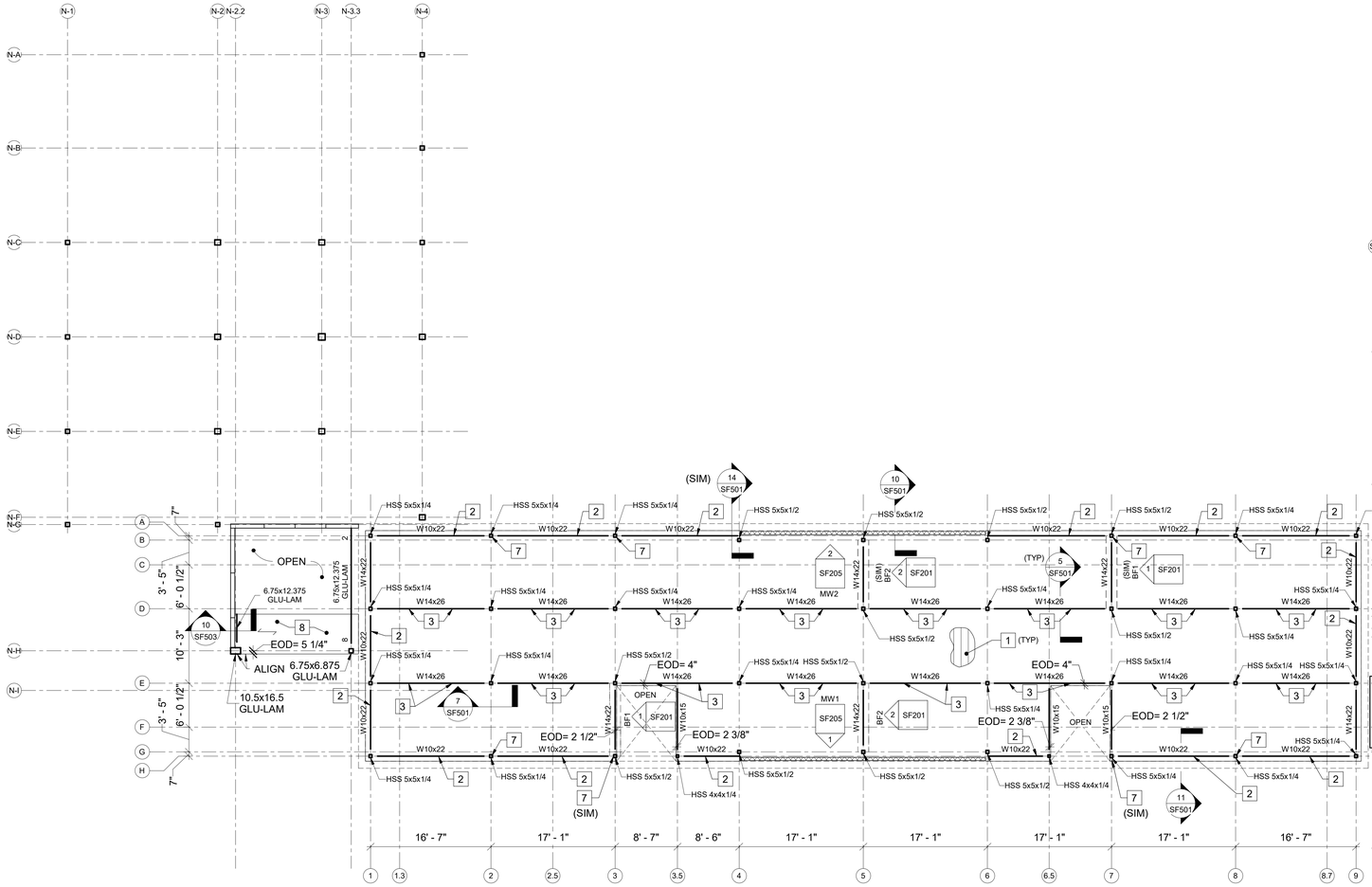

1 THIRD FLOOR FRAMING PLAN

SF103 SCALE: 1/8" = 1'-0"

PLAN NORTH

NOTE
TOP OF STEEL ELEVATION = 191.91', UNLESS NOTED OTHERWISE.

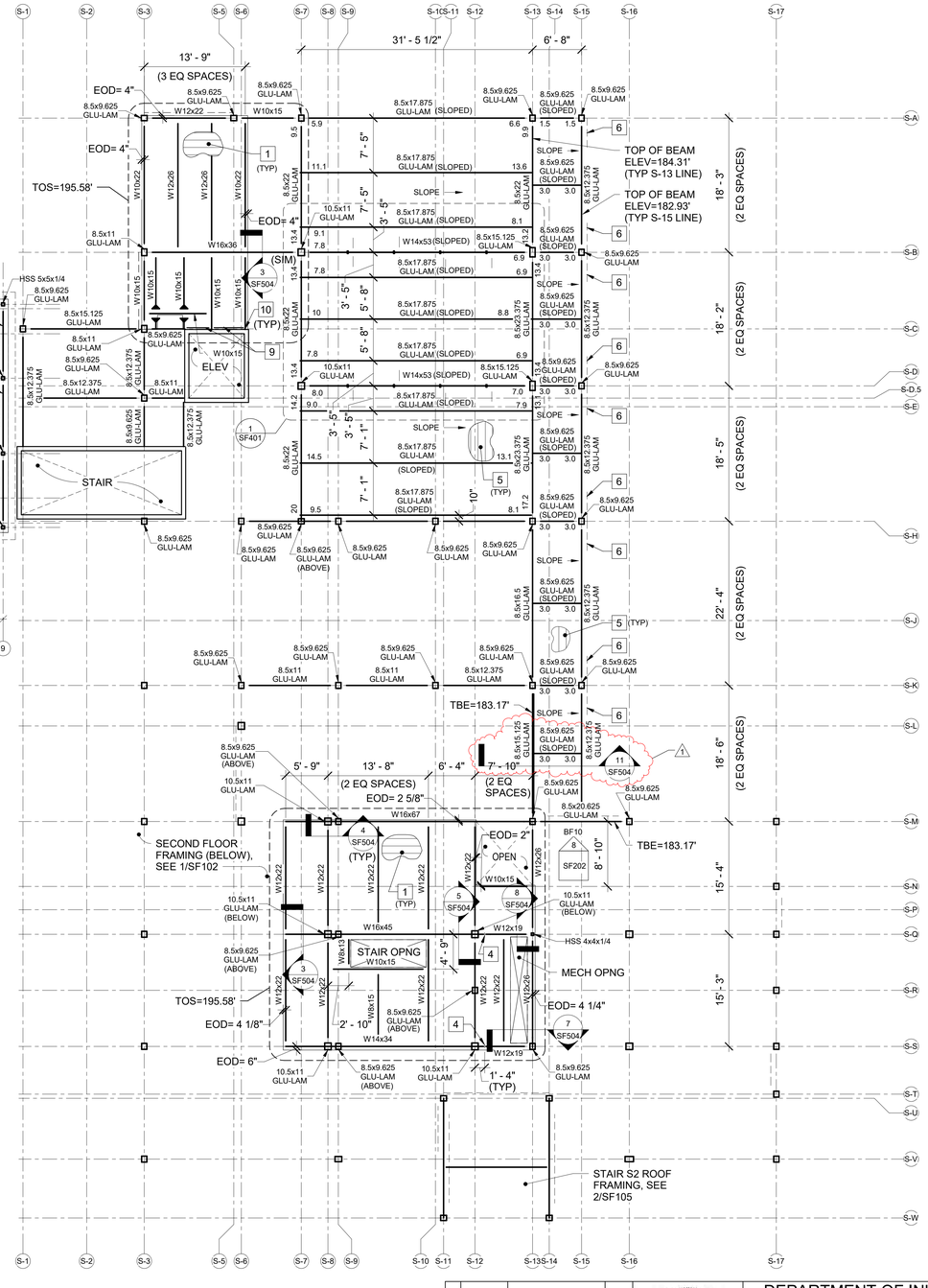

KEYNOTES (THIS SHEET ONLY)

1. 2" x 16 GA GALVANIZED COMPOSITE STEEL DECK WITH 5" LIGHTWEIGHT CONCRETE SLAB WITH 6x6, W2.0xW2.0 WELDED WIRE FABRIC.
2. LATERAL FORCE RESISTING COLLECTOR.
3. BEAM WEB PENETRATION 1. LOCATE CENTER OF PENETRATION 5'-6" FROM EACH END OF BEAM. SEE DETAIL 12/SF501.
4. BEAM SPLICE. SEE DETAIL 6/SF504.
5. 3-PLY CLT ROOF PANEL.
6. 6.5x6.875 GLU-LAM BRACE. SEE DETAIL 3/SF203.
7. LATERAL FORCE COLLECTOR CONNECTION. SEE DETAIL 8/SF502.
8. 5-PLY CLT FLOOR PANEL WITH ACOUSTICAL MAT AND 2" LIGHTWEIGHT CONCRETE TOPPING SLAB. TOP OF CONCRETE ELEVATION = 192.33'. TOP OF CLT PANEL ELEVATION = 192.13'
9. ◿ 5x5x5/16. SEE DETAIL 3/SF503 FOR CONNECTION TO 5-PLY CLT WALL PANEL.
10. CONNECT ◿ 5x5x5/16 TO W10x15 WITH 3/8"x4"x4" STEEL PLATE WITH (1) 3/4" A325N BOLT, WELD PLATE TO W10x15 WEB WITH 3/16" FILLET WELD BOTH SIDES.

GRAPHIC SCALE

1/8"=1'-0" 8' 4' 0 8' 16'

CHECK GRAPHIC SCALE BEFORE USING

NO.	DATE	DESCRIPTION	BY
1	02/13/2025	ADDENDUM NO. 1	DNM
		REVISIONS	

STATE OF MAINE DAVID N. MARTIN No. 9685 LICENSED PROFESSIONAL ENGINEER

DRAWN BY: MJC
CHECK BY: DNM
NO.
DATE 01/29/2025

DEPARTMENT OF INLAND FISHERIES & WILDLIFE

TITLE: NEW OFFICE HEADQUARTERS
LOCATION: AUGUSTA, ME
TITLE THIS DWG: THIRD FLOOR FRAMING PLAN

OAK POINT ASSOCIATES
ARCHITECTURE ■ ENGINEERING ■ PLANNING
231 Main Street, Biddeford, Maine 04005 207.283.0193

DRAWING NO. SF103
SHEET NO. 70 OF 239

2/12/2025 1:10:57 PM
C:\Users\MattDocuments\22205.04-IF&W-STRUCTURAL_v22_mclemons3R6Z5.rvt

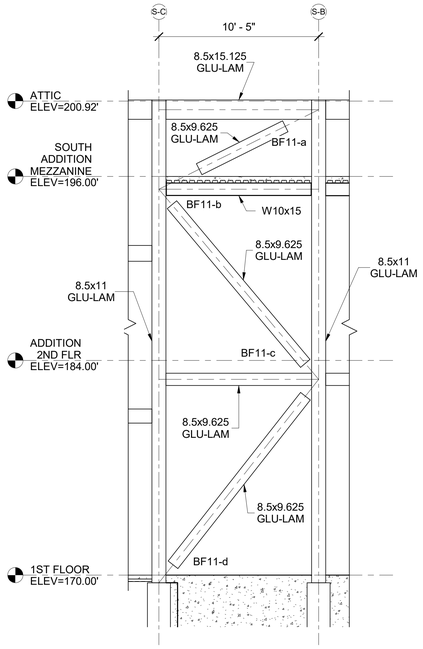

1 / SF203 BRACED FRAME 11 ELEVATION - BF11
SF102 SCALE: 1/4" = 1'-0"

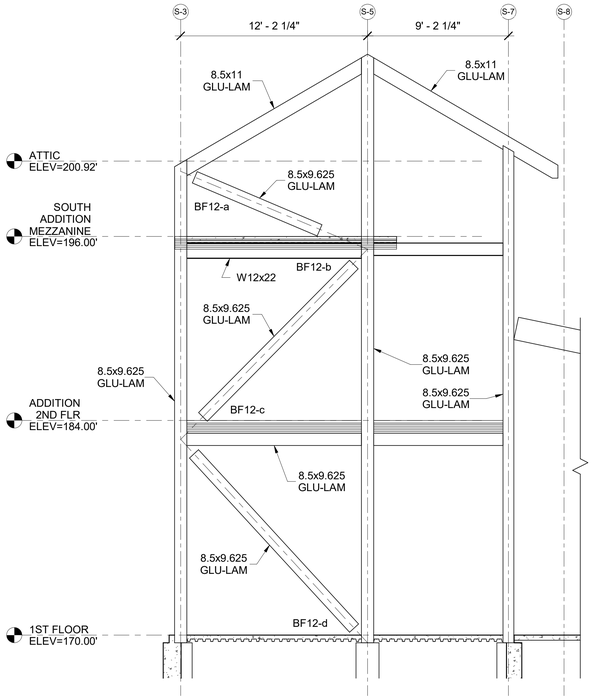

2 / SF203 BRACED FRAME 12 ELEVATION - BF12
SF102 SCALE: 1/4" = 1'-0"

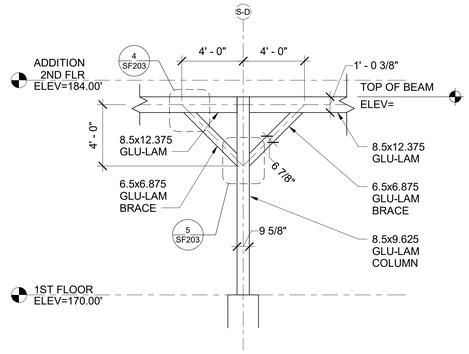

3 / SF203 KNEE BRACE 13 ELEVATION - KB13
SF103 SCALE: 1/4" = 1'-0"

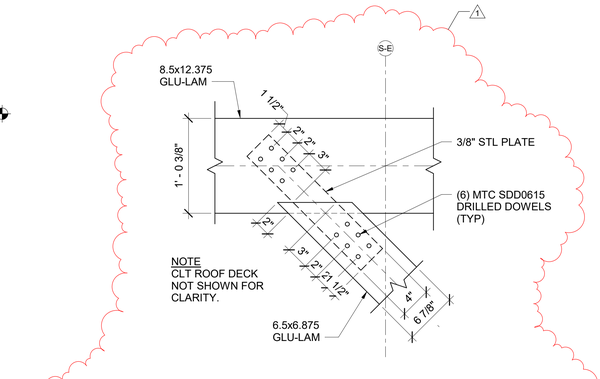

4 / SF203 6.5x6.875 GLU-LAM TO 8.5x12.375 GLU-LAM CONN DETAIL
SF203 SCALE: 1 1/2" = 1'-0"

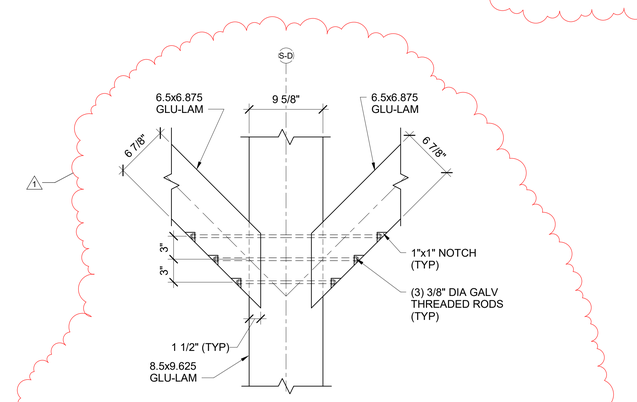

5 / SF203 (2) 6.5x6.875 GLU-LAM TO 8.5x9.625 GLU-LAM CONN DETAIL
SF203 SCALE: 1 1/2" = 1'-0"

GENERAL NOTES (THIS SHEET ONLY)

1. REFER TO SHEET SF204 FOR GLU-LAM BRACED FRAME CONNECTION FORCES SCHEDULE.

GRAPHIC SCALES

1-1/2"=1'-0" 1' 8" 4" 0 1'

1/4"=1'-0" 4' 2' 0 4' 8'

CHECK GRAPHIC SCALES BEFORE USING

NO.	DATE	DESCRIPTION	BY
1	02/13/2025	ADDENDUM NO. 1	DNM
		REVISIONS	

STATE OF MAINE
DAVID N. MARTIN
No. 5622
LICENSED
PROFESSIONAL ENGINEER

DRAWN BY: MJC
CHECK BY: DNM
DATE 01/29/2025

DEPARTMENT OF INLAND FISHERIES & WILDLIFE

TITLE NEW OFFICE HEADQUARTERS

LOCATION AUGUSTA, ME

TITLE THIS DWG. GLU-LAM BRACED FRAME ELEVATIONS 2

OAK POINT ASSOCIATES
ARCHITECTURE ★ ENGINEERING ★ PLANNING
231 Main Street, Biddeford, Maine 04005 207.283.0193

DRAWING NO. SF203

SHEET NO. 75 OF 239

2/13/2025 8:49:26 AM
C:\Users\MattDocuments\22205.04-IF&W-STRUCTURAL_v22_mdemons3RMZ5.rvt

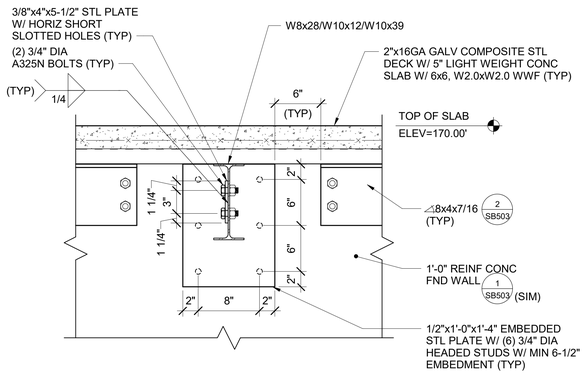

1 W8x28/W10x12/W10x39 EMBEDDED STEEL PLATE DETAIL

SF101 SF504 SCALE: 1 1/2" = 1'-0"

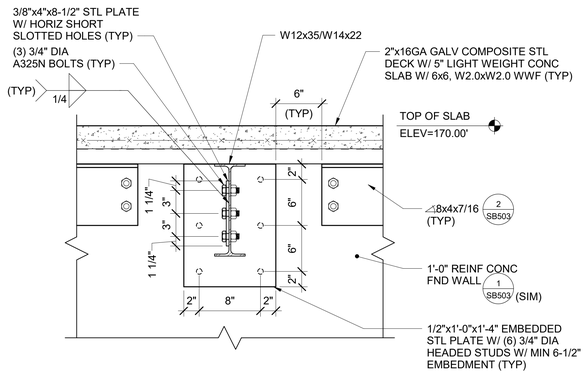

2 W12x35/W14x22 EMBEDDED STEEL PLATE DETAIL

SF101 SF504 SCALE: 1 1/2" = 1'-0"

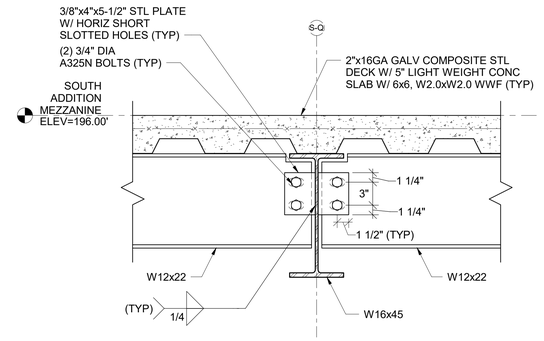

3 W12x22 TO W16x45 CONN DETAIL

SF103 SF504 SCALE: 1 1/2" = 1'-0"

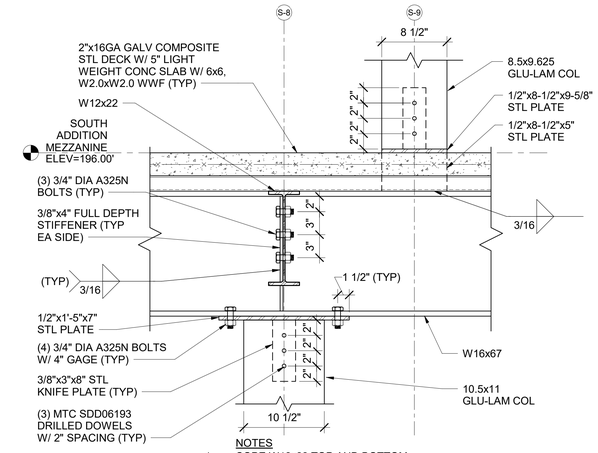

NOTES

1. COPE W12x22 TOP AND BOTTOM.
2. USE SIMILAR DETAIL AT COLUMN LINES S-6/S-X AND S-6/S-Y.
3. PROVIDE HORIZONTAL SHORT SLOTTED HOLES AT W12x22 CONNECTION.

4 W12x22 TO W16x67 CONN DETAIL

SF103, SF602, SF603 SF504 SCALE: 1 1/2" = 1'-0"

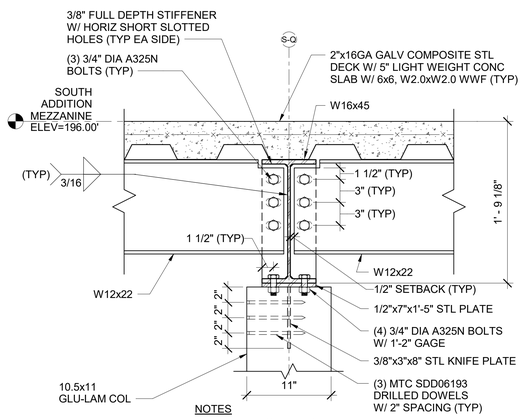

NOTES

1. SEE DETAIL 6/SF504 FOR W12x19 TO W16x45 SPLICE.
2. COPE W12x22'S TOP AND BOTTOM.

5 W12x22/W16x45 TO GLU-LAM COL CONN DETAIL

SF103, SF603 SF504 SCALE: 1 1/2" = 1'-0"

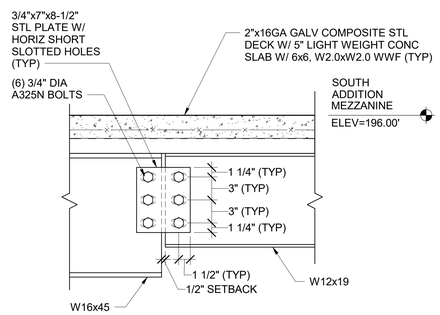

NOTE
USE AT SPLCE OF W12x19 TO W14x34.

6 W12x19 TO W16x45 BEAM SPLICE DETAIL

SF103, SF504 SCALE: 1 1/2" = 1'-0"

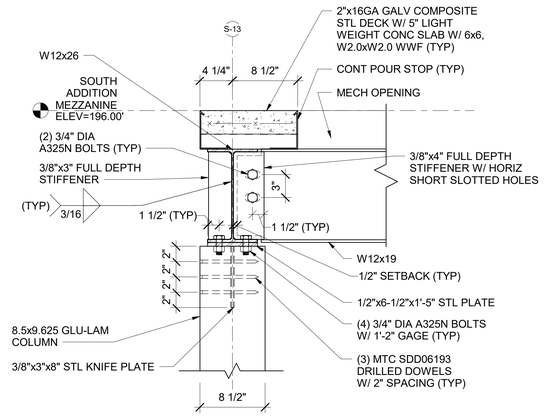

7 W12x19 TO W12x26 CONN DETAIL

SF103, SF603 SF504 SCALE: 1 1/2" = 1'-0"

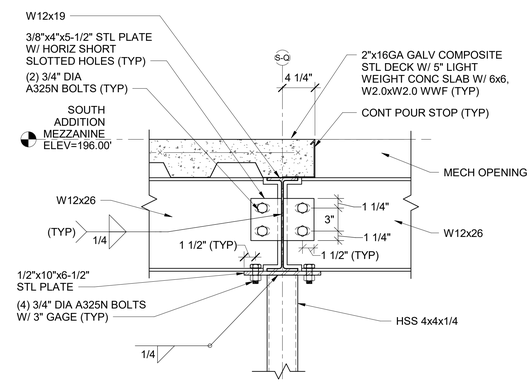

8 W12x26/W12x19 TO HSS 4x4x1/4 COL CONN DETAIL

SF103, SF603 SF504 SCALE: 1 1/2" = 1'-0"

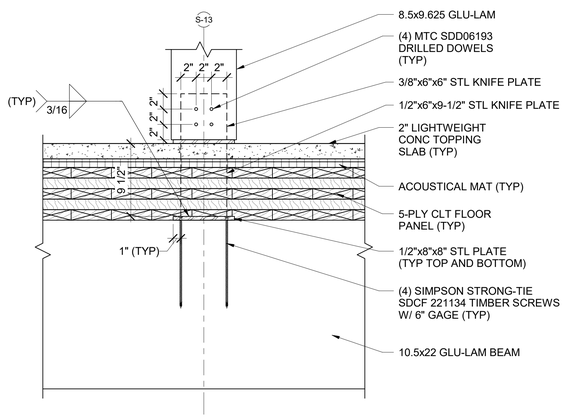

9 8.5x9.625 GLU-LAM TO 10.5x22 GLU-LAM CONN DETAIL

SF102, SF603 SF504 SCALE: 1 1/2" = 1'-0"

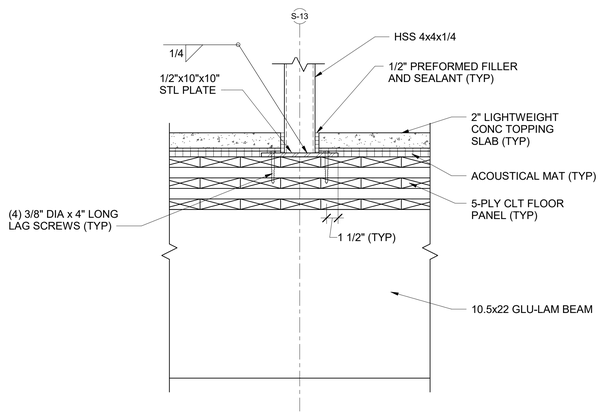

10 HSS 4x4x1/4 TO 10.5x22 GLU-LAM CONN DETAIL

SF102, SF603 SF504 SCALE: 1 1/2" = 1'-0"

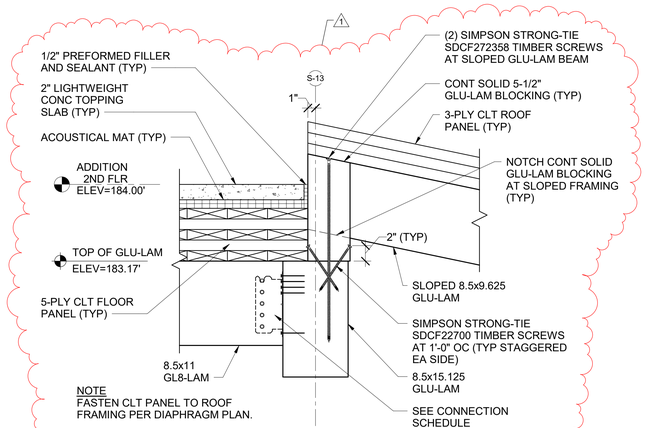

NOTE
FASTEN CLT PANEL TO ROOF
FRAMING PER DIAPHRAGM PLAN.

11 GLU-LAM BEAM/CLT ROOF PANEL SUPPORT DETAIL

SF102, SF103 SF504 SCALE: 1 1/2" = 1'-0"

GRAPHIC SCALE

1-1/2"=1'-0" 1' 8" 4" 0 1'

CHECK GRAPHIC SCALE BEFORE USING

NO.	DATE	DESCRIPTION	BY
1	02/13/2025	ADDENDUM NO. 1	DNM

REVISIONS

STATE OF MAINE
DAVID N. MARTIN
No. 14422
LICENSED
PROFESSIONAL ENGINEER

DRAWN BY: MJC
CHECK BY: DNM
NO.
DATE 01/29/2025

DEPARTMENT OF INLAND FISHERIES & WILDLIFE

TITLE NEW OFFICE HEADQUARTERS

LOCATION AUGUSTA, ME

TITLE THIS DWG STRUCTURAL DETAILS 4

OAK POINT ASSOCIATES
ARCHITECTURE ■ ENGINEERING ■ PLANNING
231 Main Street, Biddeford, Maine 04005 207.283.0199

DRAWING NO. SF504

SHEET NO. 88 OF 239

2/12/2025 3:01:16 PM
C:\Users\MattDocuments\22205.04-IF&W-STRUCTURAL_v22_mclemons3RMZ5.rvt

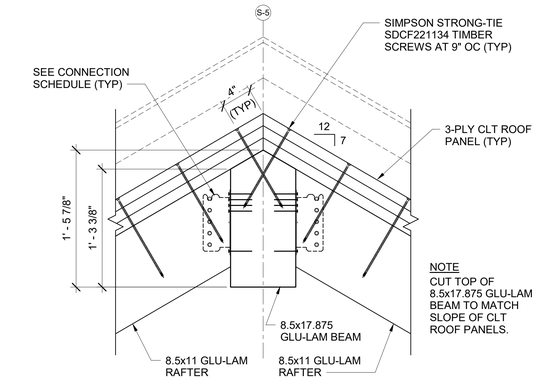

1 SF505 **8.5x11 GLU-LAM TO 8.5x17.875 GLU-LAM CONN AT RIDGE**
SF105 SCALE: 1 1/2" = 1'-0"

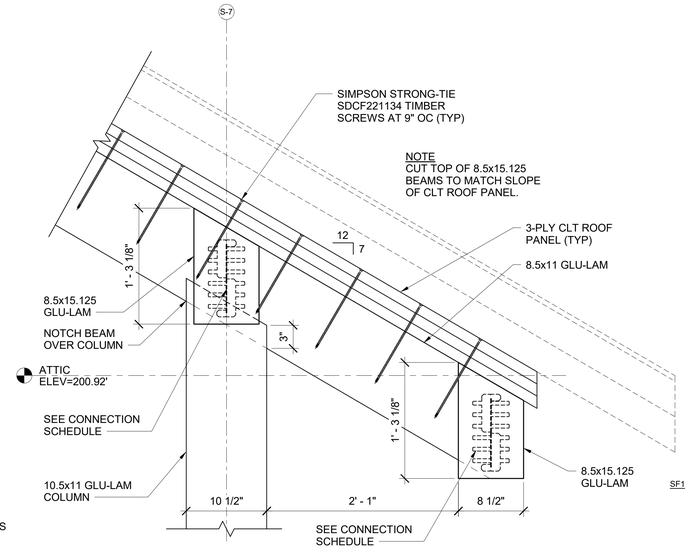

2 SF505 **8.5x11 GLU-LAM DETAIL AT OVERHANG**
SF105, SF603 SCALE: 1 1/2" = 1'-0"

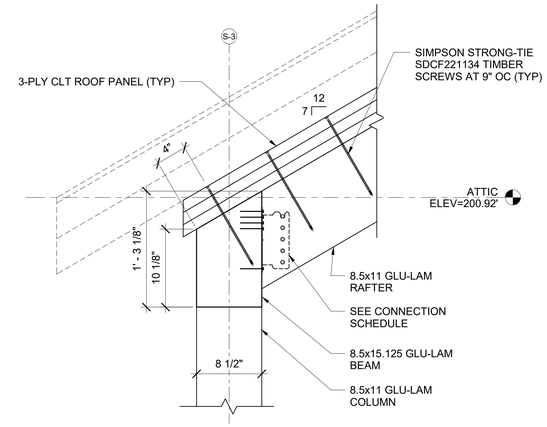

3 SF505 **8.5x11 GLU-LAM RAFTER TO 8.5x15.125 CONN DETAIL**
SF105, SF602, SF603 SCALE: 1 1/2" = 1'-0"

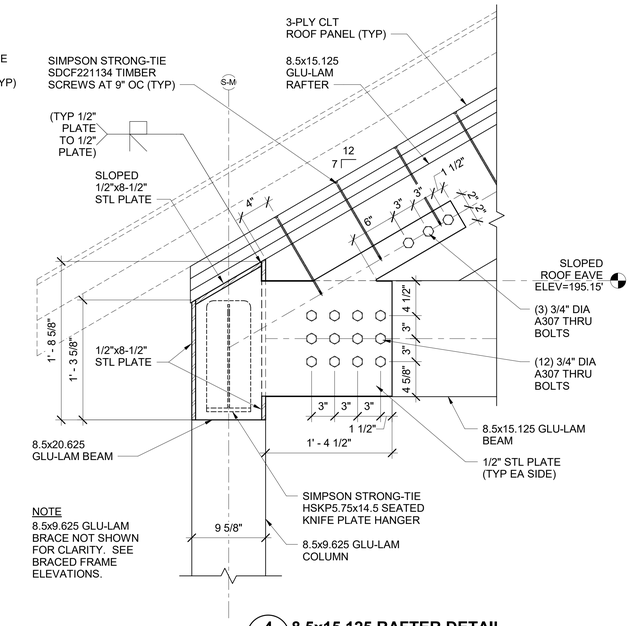

4 SF505 **8.5x15.125 RAFTER DETAIL**
SF105, SF202, SF603 SCALE: 1 1/2" = 1'-0"

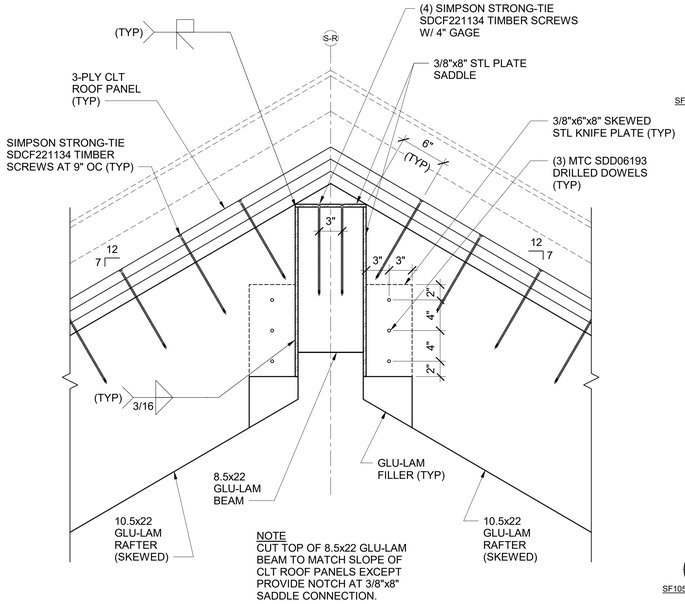

5 SF505 **10.5x22 GLU-LAM HIP RAFTER TO 8.5x22 GLU-LAM CONN**
SF105 SCALE: 1 1/2" = 1'-0"

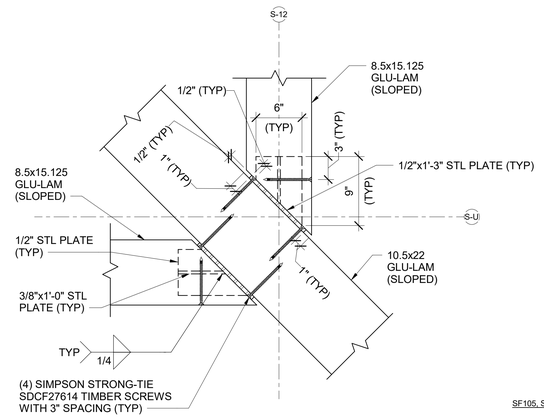

6 SF505 **8.5x15.125 GLU-LAM RAFTER TO 10.5x22 GLU-LAM HIP CONN DETAIL**
SF105 SCALE: 1 1/2" = 1'-0"

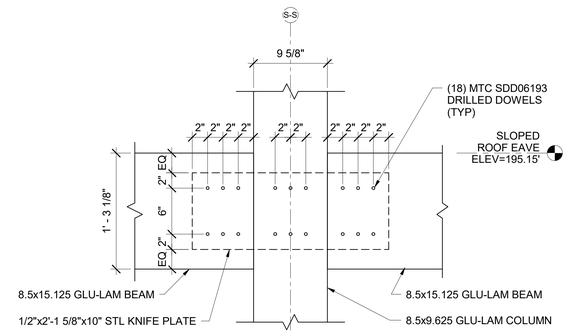

7 SF505 **8.5x15.125 GLU-LAM BEAM TO 9.5x9.625 GLU-LAM COL CONN DETAIL**
SF105, SF211 SCALE: 1 1/2" = 1'-0"

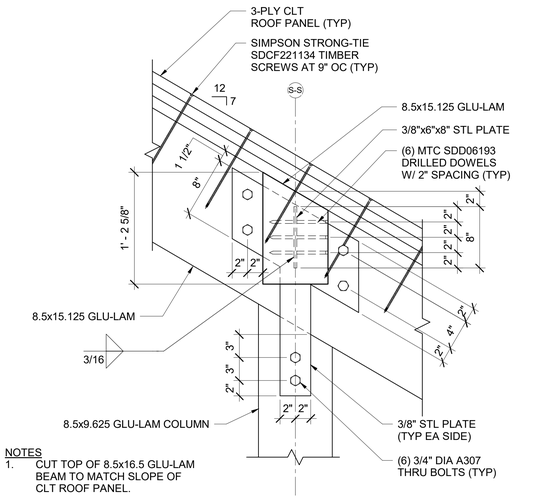

NOTES
1. CUT TOP OF 8.5x16.5 GLU-LAM BEAM TO MATCH SLOPE OF CLT ROOF PANEL.
2. COUNTERSINK 3/4" DIAMETER A307 THRU BOLTS AT FAR SIDE OF CONNECTION.

8 SF505 **8.5x15.125 GLU-LAM TO 8.5x9.625 GLU-LAM COL CONN DETAIL**
SF211 SCALE: 1 1/2" = 1'-0"

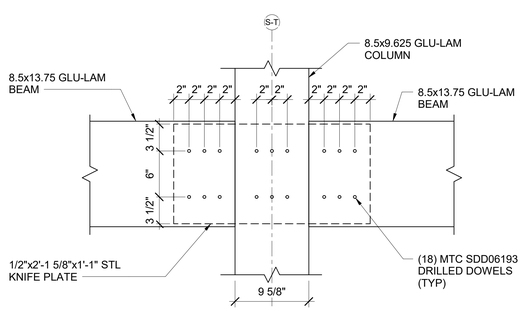

9 SF505 **8.5x13.75 GLU-LAM BEAM TO 8.5x9.625 GLU-LAM COL CONN DETAIL**
SF105, SF211 SCALE: 1 1/2" = 1'-0"

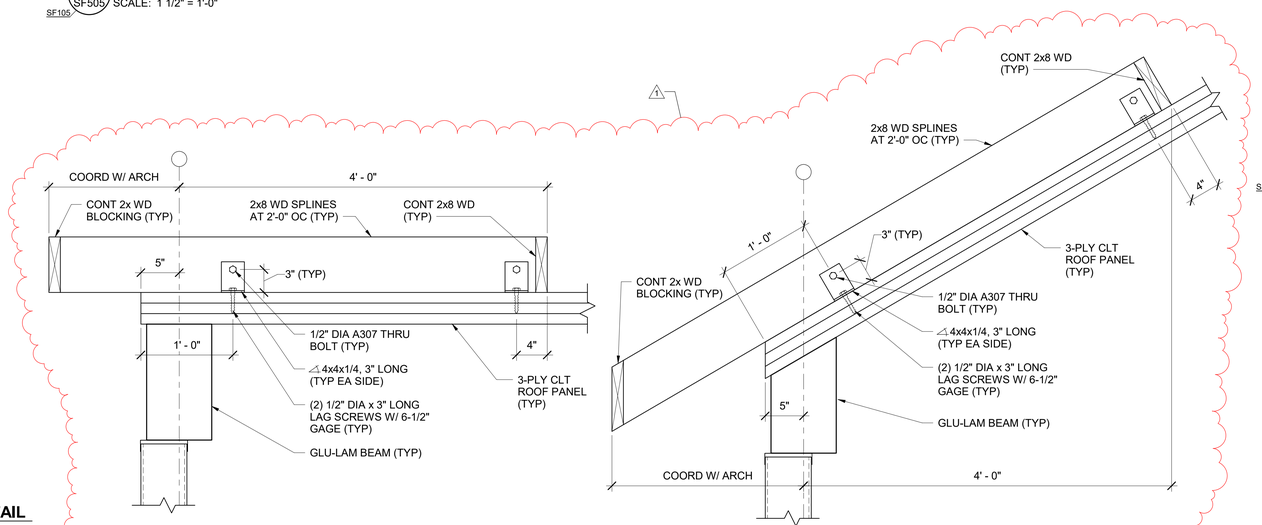

10 SF505 **TYP SLOPED ROOF RAKE OVERHANG DETAIL**
AE502 SCALE: 1 1/2" = 1'-0"

11 SF505 **TYP SLOPED ROOF EAVE OVERHANG DETAIL**
AE502 SCALE: 1 1/2" = 1'-0"

GRAPHIC SCALE
1-1/2"=1'-0" 1' 8" 4" 0 1'
CHECK GRAPHIC SCALE BEFORE USING

NO.	DATE	REVISIONS	BY
1	02/13/2025	ADDENDUM NO. 1	DNM

DRAWN BY: MJC
CHECK BY: DNM
NO.
DATE 01/29/2025

STATE OF MAINE DAVID N. MARTIN No. 5622 LICENSED PROFESSIONAL ENGINEER

DEPARTMENT OF INLAND FISHERIES & WILDLIFE
TITLE NEW OFFICE HEADQUARTERS
LOCATION AUGUSTA, ME
TITLE THIS DWG. STRUCTURAL DETAILS 5

OAK POINT ASSOCIATES
ARCHITECTURE ■ ENGINEERING ■ PLANNING
231 Main Street, Biddeford, Maine 04005 207.283.0193

DRAWING NO. SF505
SHEET NO. 89 OF 239

2/13/2025 9:23:58 AM
C:\Users\MattDocuments\22205.04-IF&W-STRUCTURAL_v22_mclemons3RMZ5.rvt

GLU-LAM BEAM TO GLU-LAM COLUMN CONNECTION SCHEDULE

REACTION	MODEL	FASTENERS				
		CARRIED BEAM		CARRYING MEMBER		
		BEAM SEAT	BEARING REINF	BOTTOM HORIZ	INCLINED	TOP HORIZ
8.5 KIPS TO 20 KIPS	SIMPSON STRONG-TIE HSKP 5.75x14.75	(2) 27614	NR	(8) 27614	(8) 27400	(6) 22858
21 KIPS TO 24 KIPS	SIMPSON STRONG-TIE HSKP 5.75x17	(2) 27614	(2) 22858	(8) 27614	(8) 27400	(6) 22858
25 KIPS TO 29 KIPS	SIMPSON STRONG-TIE HSKP 5.75x19.5	(2) 27614	(2) 22858	(8) 27614	(8) 27400	(6) 22858

NOTES
1. SEE DETAIL 1/SF601.
2. FOR BEAM REACTIONS GREATER THAN 32 KIPS, REFER TO DETAIL CALLED OUT ON FRAMING PLANS.
3. FASTENERS SIMPSON STRONG-TIE SDCF TIMBER SCREW.

GLU-LAM BEAM TO GLU-LAM BEAM CONNECTION SCHEDULE

REACTION	MODEL	FASTENERS				
		CARRIED BEAM		CARRYING MEMBER		
		BEAM SEAT	BEARING REINF	BOTTOM HORIZ	INCLINED	TOP HORIZ
8.5 KIPS TO 20 KIPS	SIMPSON STRONG-TIE HSKP 5.75x14.75	(2) 27614	NR	(8) 27614	(8) 27614	(6) 22858
21 KIPS TO 26 KIPS	SIMPSON STRONG-TIE HSKP 5.75x17	(2) 27614	(2) 22858	(8) 27614	(8) 27614	(6) 22858
27 KIPS TO 30 KIPS	SIMPSON STRONG-TIE HSKP 5.75x19.5	(2) 27614	(2) 22858	(8) 27614	(8) 27614	(6) 22858

NOTES
1. SEE DETAIL 1/SF601 (SIMILAR).
2. FOR BEAM REACTIONS GREATER THAN 30 KIPS, REFER TO DETAIL CALLED OUT ON FRAMING PLANS.
3. FASTENERS SIMPSON STRONG-TIE SDCF TIMBER SCREW.

GLU-LAM BEAM TO GLU-LAM COLUMN/BEAM CONNECTION SCHEDULE

1

REACTION	MODEL	FASTENERS	
		CARRIED BEAM JOIST PINS	CARRYING MEMBER FASTENERS
<3.9 KIPS	SIMPSON STRONG-TIE CJT5Z	(5) 1/2" DIAMETER	(10) 1/4" x 3" SDS SCREWS
4.0 KIPS TO 4.5 KIPS	SIMPSON STRONG-TIE CJT6Z	(6) 1/2" DIAMETER	(12) 1/4" x 3" SDS SCREWS
4.6 KIPS TO 8.4 KIPS	SIMPSON STRONG-TIE HCJTZ	(7) 1/2" DIAMETER	(22) 1/4" x 3" SDS SCREWS

NOTES
1. SEE DETAIL 2/SF601.
2. USE FOR SLOPED ROOF MEMBERS.
3. USE DEEPER CONNECTOR AS REQUIRED TO MEET MANUFACTURER'S MINIMUM DEPTH FOR HANGER.

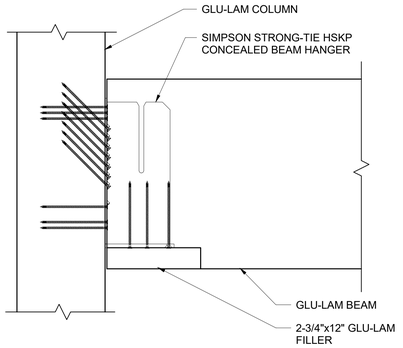

NOTES
1. CLT DECK AND CONCRETE TOPPING SLAB NOT SHOWN FOR CLARITY.
2. ROUT DEPTH = 1".

1 / SF601 GLU-LAM BEAM TO GLU-LAM COLUMN CONN DETAIL
SF601 SCALE: 1 1/2" = 1'-0"

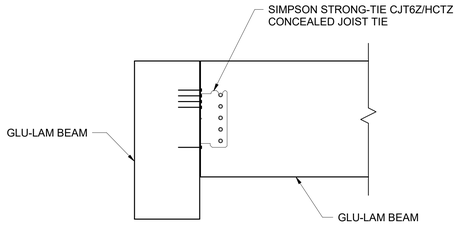

NOTE
CLT DECK AND CONCRETE TOPPING SLAB NOT SHOWN FOR CLARITY.

2 / SF601 GLU-LAM BEAM TO GLU-LAM BEAM CONN DETAIL
SF601 SCALE: 1 1/2" = 1'-0"

GRAPHIC SCALE
1-1/2"=1'-0" 1' 8" 4" 0 1'
CHECK GRAPHIC SCALE BEFORE USING

NO.	DATE	DESCRIPTION	BY
1	02/13/2025	ADDENDUM NO. 1	DNM
		REVISIONS	

STATE OF MAINE
DAVID N. MARTIN
No. 9625
LICENSED
PROFESSIONAL ENGINEER

DRAWN BY: MJC
CHECK BY: DNM
NO.
DATE 01/29/2025

DEPARTMENT OF INLAND FISHERIES & WILDLIFE
TITLE NEW OFFICE HEADQUARTERS
LOCATION AUGUSTA, ME
TITLE THIS DWG. GLU-LAM CONNECTION SCHEDULES AND DETAILS

OAK POINT ASSOCIATES
ARCHITECTURE ■ ENGINEERING ■ PLANNING
231 Main Street, Biddeford, Maine 04005 207.283.0192

DRAWING NO. SF601
SHEET NO. 93 OF 239

2/12/2025 1:11:01 PM
C:\Users\MattDocuments\22205.04-IF&W-STRUCTURAL_v22_mdemons3RMZ5.rvt

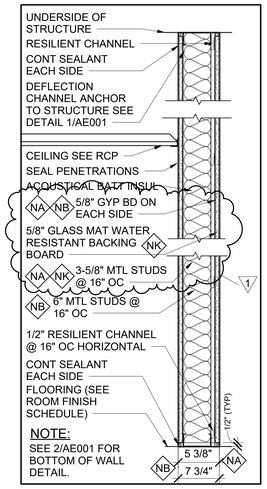

NOTE:
SEE 2/AE001 FOR BOTTOM OF WALL DETAIL.

3-5/8" MTL STUD W/ 1/2" RESILIENT CHANNEL FULL HGT NA

6" MTL STUD W/ 1/2" RESILIENT CHANNEL FULL HGT NB

3-5/8" MTL STUD W/ 1/2" RESILIENT CHANNEL FULL HGT NK 1

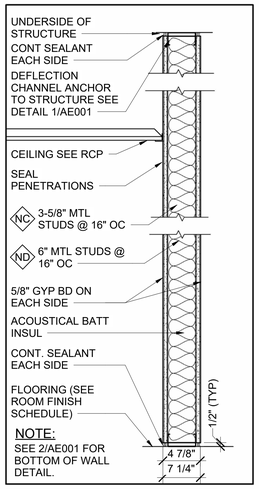

NOTE:
SEE 2/AE001 FOR BOTTOM OF WALL DETAIL.

3-5/8" MTL STUD FULL HGT 5/8" GYP BD EACH SIDE NC

6" MTL STUD FULL HGT ND

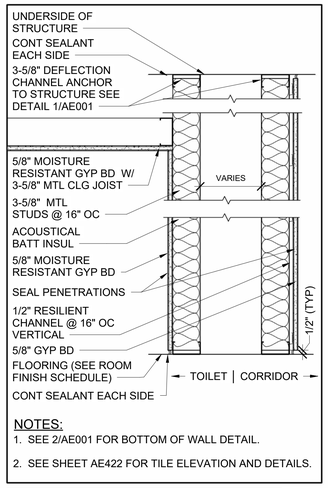

NOTES:
1. SEE 2/AE001 FOR BOTTOM OF WALL DETAIL.
2. SEE SHEET AE422 FOR TILE ELEVATION AND DETAILS.

3-5/8" MTL STUD CHASE WALL FULL HEIGHT W/ WALL TILE NE

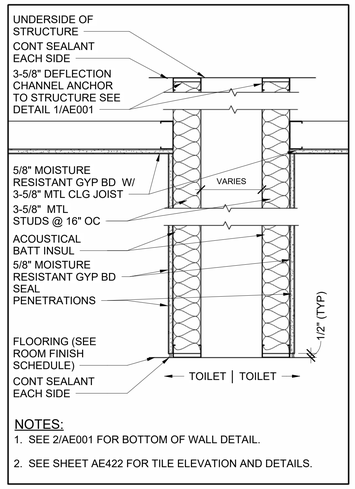

NOTES:
1. SEE 2/AE001 FOR BOTTOM OF WALL DETAIL.
2. SEE SHEET AE422 FOR TILE ELEVATION AND DETAILS.

3-5/8" MTL STUD CHASE WALL FULL HEIGHT W/ WALL TILE BOTH SIDES NF

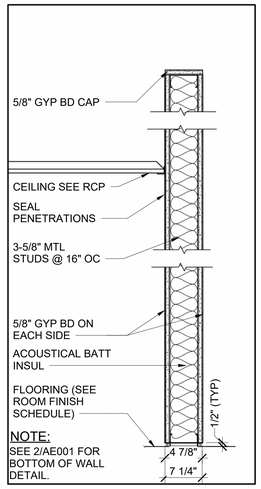

NOTE:
SEE 2/AE001 FOR BOTTOM OF WALL DETAIL.

3-5/8" MTL STUD PARTIAL HGT 12'-0" AFF NG

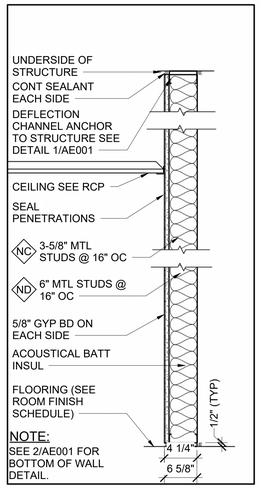

NOTE:
SEE 2/AE001 FOR BOTTOM OF WALL DETAIL.

3-5/8" MTL STUD FULL HGT 5/8" GYP BD ONE SIDE NH

1-5/8" MTL STUD FULL HGT 5/8" GYP BD ONE SIDE NJ

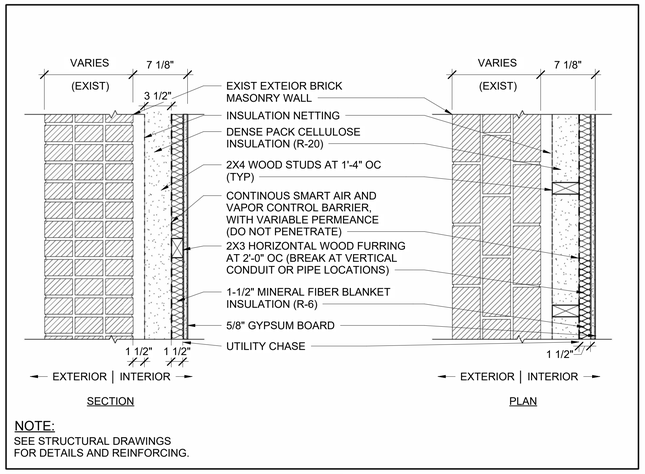

NOTE:
SEE STRUCTURAL DRAWINGS FOR DETAILS AND REINFORCING.

EXTERIOR WALL INSULATION AND FINISH SYSTEM NON-FIRE RATED XA

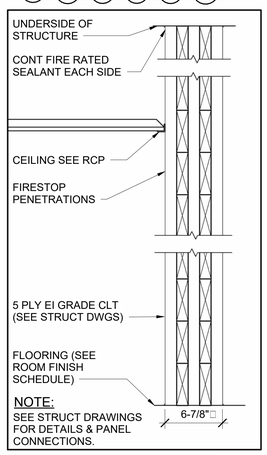

NOTE:
SEE STRUCT DRAWINGS FOR DETAILS & PANEL CONNECTIONS.

5-PLY CLT
1 HOUR RATED
UL (V320) 1A

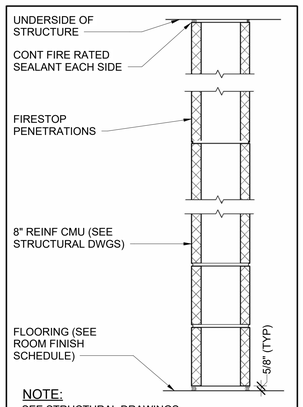

NOTE:
SEE STRUCTURAL DRAWINGS FOR DETAILS AND REINFORCING.

8" REINFORCED CMU
1 HOUR RATED
UL U906 1B

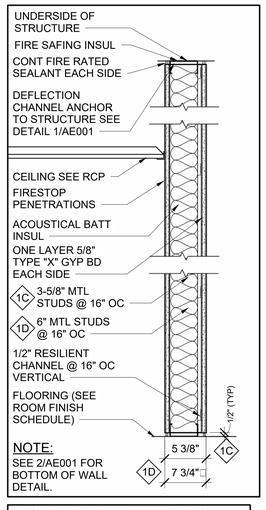

NOTE:
SEE 2/AE001 FOR BOTTOM OF WALL DETAIL.

3 5/8" MTL STUD FULL HGT W/ 1/2" RESILIENT CHANNEL FULL HGT, 1 HOUR RATED UL U465 1C

6" MTL STUD FULL HGT W/ 1/2" RESILIENT CHANNEL FULL HGT, 1 HOUR RATED UL U465 (SIM) 1D

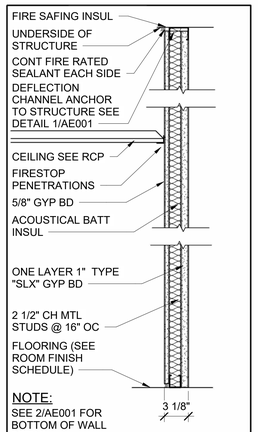

NOTE:
SEE 2/AE001 FOR BOTTOM OF WALL DETAIL.

2 1/2" CH MTL STUD W/ 1/2" RESILIENT CHANNEL FULL HGT 1 HOUR RATED UL U415 1E

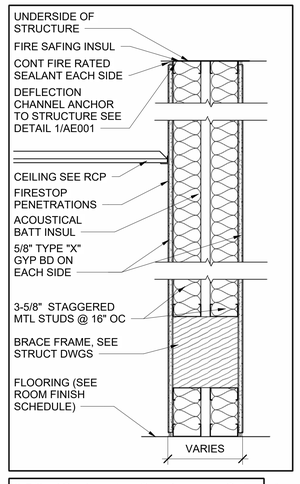

3 5/8" DOUBLE MTL STUD FULL HGT 1 HOUR RATED UL U493 1F

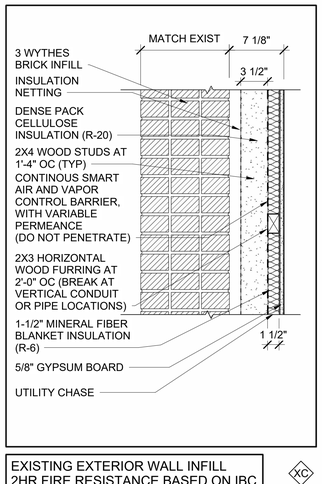

EXISTING EXTERIOR WALL INFILL 2HR FIRE RESISTANCE BASED ON IBC TABLE 722.4.1(1) XC

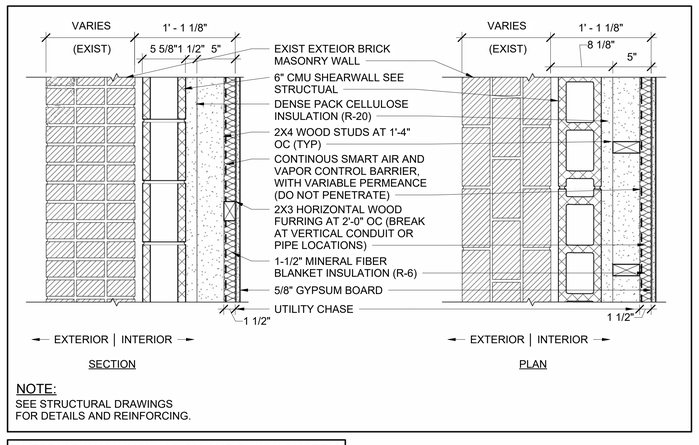

NOTE:
SEE STRUCTURAL DRAWINGS FOR DETAILS AND REINFORCING.

EXTERIOR WALL INSULATION AND FINISH SYSTEM NON-FIRE RATED XB

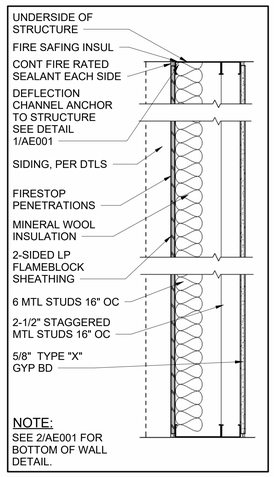

NOTE:
SEE 2/AE001 FOR BOTTOM OF WALL DETAIL.

3-1/2" MTL STUD FULL HGT
1 HOUR RATED V337 1G

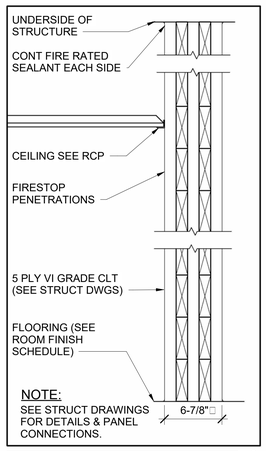

NOTE:
SEE STRUCT DRAWINGS FOR DETAILS & PANEL CONNECTIONS.

5-PLY CLT
2 HOUR RATED
WESTERN FIRE CENTER 1/26/2017 2A

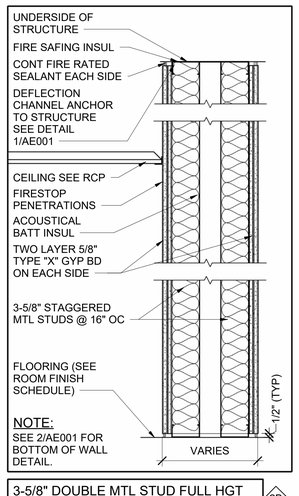

NOTE:
SEE 2/AE001 FOR BOTTOM OF WALL DETAIL.

3-5/8" DOUBLE MTL STUD FULL HGT
2 HOUR RATED UL U493 2B

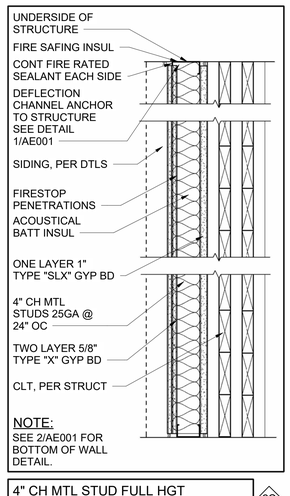

NOTE:
SEE 2/AE001 FOR BOTTOM OF WALL DETAIL.

4" CH MTL STUD FULL HGT
2 HOUR RATED UL U415 2C

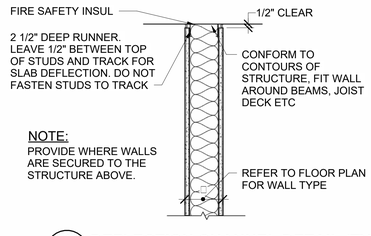

NOTE:
PROVIDE WHERE WALLS ARE SECURED TO THE STRUCTURE ABOVE.

1 DEFLECTION CHANNEL DETAIL (TYP)

AE001 AE001 SCALE: 1 1/2" = 1'-0"

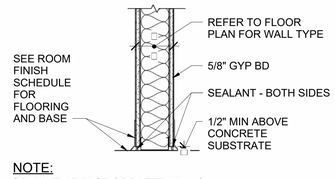

NOTE:
SEALANT AT BASE OF RATED WALLS TO BE FIRE RATED SEALANT.

2 GYP BD SILL DETAIL (TYP)

AE001 AE001 SCALE: 1 1/2" = 1'-0"

GRAPHIC SCALE

1-1/2"=1'-0" 1' 8" 4" 0 1'

CHECK GRAPHIC SCALE BEFORE USING

GENERAL NOTES: (THIS SHEET ONLY)

1. PROVIDE 5/8" ABUSE RESISTANT (VERY HIGH IMPACT) GYPSUM BOARD AT ALL EXPOSED CORRIDOR WALLS TO 8'-0" MINIMUM ABOVE FINISH FLOOR AND AS INDICATED.
2. SEE STRUCTURAL DRAWINGS FOR MASONRY WALL REINFORCING.

3A. SEE ROOM FINISH SCHEDULES ON AE640 AND AE641 FOR WALL FINISHES.

3B. SEE REFLECTED CEILING PLANS FOR ACT AND GYPSUM BOARD CEILING HEIGHTS; AE701- AE704.

4. GYPSUM BOARD WALLS WITH CERAMIC TILE FINISH SHALL HAVE 5/8" MOISTURE RESISTANT GYP BD. COORDINATE CERAMIC TILE WAINSCOTING WITH INTERIOR TOILET ELEVATIONS AND FINISH SCHEDULES.

5A. AT FIRE RESISTANT RATED ASSEMBLIES PROVIDE TESTED AND LISTED FIRESTOP SYSTEMS TO MAINTAIN THE INTEGRITY OF THE FIRE RESISTANT RATING. AREAS REQUIRING FIRESTOP SYSTEMS INCLUDE MEMBRANE PENETRATIONS, THROUGH PENETRATIONS, JOINTS BETWEEN ASSEMBLIES AND CONSTRUCTION JOINTS. PROVIDE ENGINEERING JUDGEMENT IF LISTED ASSEMBLY IS UNAVAILABLE.

5B. AT SMOKE BARRIERS AND SMOKE PARTITIONS PROVIDE SEALANT TO MAINTAIN THE INTEGRITY OF THE SMOKE RESISTANCE OF THE ASSEMBLY. AREAS REQUIRING SEALANT INCLUDE MEMBRANE PENETRATIONS, THROUGH PENETRATIONS, JOINTS BETWEEN ASSEMBLIES AND CONSTRUCTION JOINTS.

5C. WHERE FLOORS INTERSECT EXTERIOR CURTAIN WALLS, PROVIDE A JOINT SYSTEM THAT IS CAPABLE OF LIMITING THE TRANSFER OF SMOKE.

5D. REFER TO SHEET AE520 FOR RATED WALL PENETRATION DETAILS.

6. AT NON-RATED WALL ASSEMBLIES SEAL MEMBRANE PENETRATIONS, THROUGH PENETRATIONS, JOINTS BETWEEN ASSEMBLIES AND CONSTRUCTION JOINTS WITH ACOUSTICAL SEALANT.

NO.	DATE	DESCRIPTION	BY
1	02/13/2025	ADDENDUM NO.1	HMG
		REVISIONS	

LICENSED ARCHITECT TYLER BOWLER 1-29-25 STATE OF MAINE

DRAWN BY: MJD
CHECK BY: CET
NO.
DATE 01/29/2025

DEPARTMENT OF INLAND FISHERIES & WILDLIFE

TITLE: NEW OFFICE HEADQUARTERS
LOCATION: AUGUSTA, ME
TITLE THIS DWG: WALL TYPES AND DETAILS

OAK POINT ASSOCIATES
231 Main Street, Biddeford, Maine 04005 207.283.0193

DRAWING NO. AE001
SHEET NO. 99 OF 239

2/13/2025 12:29:23 PM
C:\Users\HeidiDocuments\22205.04-IF&W-ARCH_v22_hgardnerYBPQX.rvt

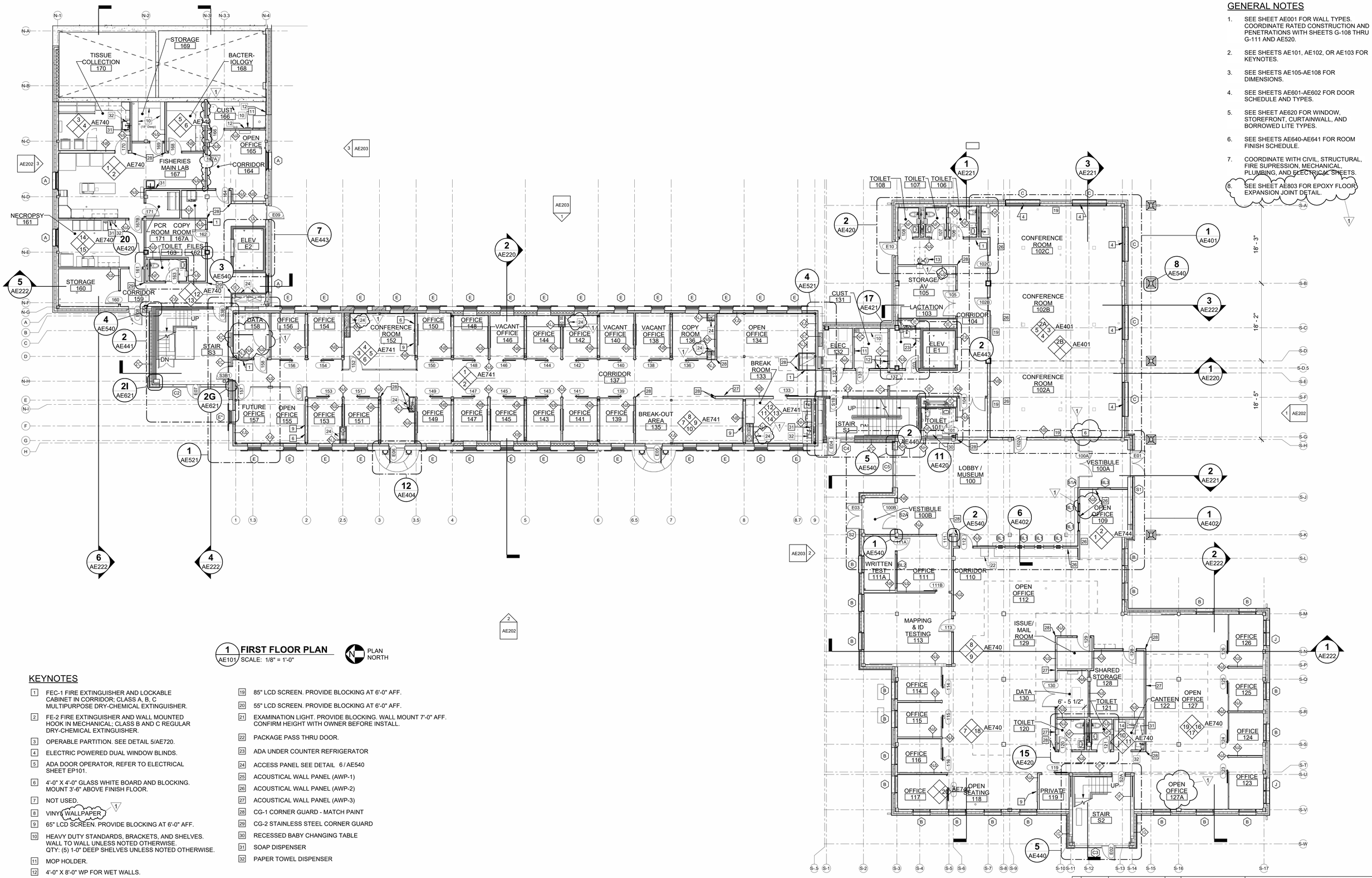

1 AE101 **FIRST FLOOR PLAN**
SCALE: 1/8" = 1'-0"

PLAN NORTH

GENERAL NOTES

1. SEE SHEET AE001 FOR WALL TYPES. COORDINATE RATED CONSTRUCTION AND PENETRATIONS WITH SHEETS G-108 THRU G-111 AND AE520.
2. SEE SHEETS AE101, AE102, OR AE103 FOR KEYNOTES.
3. SEE SHEETS AE105-AE108 FOR DIMENSIONS.
4. SEE SHEETS AE601-AE602 FOR DOOR SCHEDULE AND TYPES.
5. SEE SHEET AE620 FOR WINDOW, STOREFRONT, CURTAINWALL, AND BORROWED LITE TYPES.
6. SEE SHEETS AE640-AE641 FOR ROOM FINISH SCHEDULE.
7. COORDINATE WITH CIVIL, STRUCTURAL, FIRE SUPPRESSION, MECHANICAL, PLUMBING, AND ELECTRICAL SHEETS.
8. SEE SHEET AE803 FOR EPOXY FLOOR EXPANSION JOINT DETAIL.

KEYNOTES

1. FEC-1 FIRE EXTINGUISHER AND LOCKABLE CABINET IN CORRIDOR; CLASS A, B, C MULTIPURPOSE DRY-CHEMICAL EXTINGUISHER.
2. FE-2 FIRE EXTINGUISHER AND WALL MOUNTED HOOK IN MECHANICAL; CLASS B AND C REGULAR DRY-CHEMICAL EXTINGUISHER.
3. OPERABLE PARTITION. SEE DETAIL 5/AE720.
4. ELECTRIC POWERED DUAL WINDOW BLINDS.
5. ADA DOOR OPERATOR, REFER TO ELECTRICAL SHEET EP101.
6. 4'-0" X 4'-0" GLASS WHITE BOARD AND BLOCKING. MOUNT 3'-6" ABOVE FINISH FLOOR.
7. NOT USED.
8. VINYL WALLPAPER
9. 65" LCD SCREEN. PROVIDE BLOCKING AT 6'-0" AFF.
10. HEAVY DUTY STANDARDS, BRACKETS, AND SHELVES. WALL TO WALL UNLESS NOTED OTHERWISE. QTY: (5) 1-0" DEEP SHELVES UNLESS NOTED OTHERWISE.
11. MOP HOLDER.
12. 4'-0" X 8'-0" WP FOR WET WALLS.
13. WATER FOUNTAIN AND/OR BOTTLE FILLER, COORDINATE WITH PLUMBING SHEETS.
14. RESIDENTIAL REFRIGERATOR WITH ADA CONTROLS (NIC).
15. COUNTERTOP MICROWAVE (NIC).
16. COPIER (NIC).
17. FLUSH WALL ACCESS PANEL. BOTTOM 6" AFF.
18. WADER HANGER. BASIS OF DESIGN" RED HEAD WADER HANGER.
19. 85" LCD SCREEN. PROVIDE BLOCKING AT 6'-0" AFF.
20. 55" LCD SCREEN. PROVIDE BLOCKING AT 6'-0" AFF.
21. EXAMINATION LIGHT. PROVIDE BLOCKING. WALL MOUNT 7'-0" AFF. CONFIRM HEIGHT WITH OWNER BEFORE INSTALL.
22. PACKAGE PASS THRU DOOR.
23. ADA UNDER COUNTER REFRIGERATOR
24. ACCESS PANEL SEE DETAIL 6 / AE540
25. ACOUSTICAL WALL PANEL (AWP-1)
26. ACOUSTICAL WALL PANEL (AWP-2)
27. ACOUSTICAL WALL PANEL (AWP-3)
28. CG-1 CORNER GUARD - MATCH PAINT
29. CG-2 STAINLESS STEEL CORNER GUARD
30. RECESSED BABY CHANGING TABLE
31. SOAP DISPENSER
32. PAPER TOWEL DISPENSER

GRAPHIC SCALE
1/8"=1'-0"
8' 4' 0 8' 16'
CHECK GRAPHIC SCALE BEFORE USING

NO.	DATE	DESCRIPTION	BY
1	02/13/2025	ADDENDUM NO.1	HMG

REVISIONS

LICENSED ARCHITECT TYLER B. CLEVELAND 1-29-25 STATE OF MAINE

DRAWN BY: MJD
CHECK BY: CET
NO.
DATE 01/29/2025

DEPARTMENT OF INLAND FISHERIES & WILDLIFE

TITLE: NEW OFFICE HEADQUARTERS
LOCATION: AUGUSTA, ME
TITLE THIS DWG: FIRST FLOOR PLAN

OAK POINT ASSOCIATES
231 Main Street, Biddeford, Maine 04005 207.283.0199

DRAWING NO. AE101
SHEET NO. 100 OF 239

2/19/2025 12:17:59 PM
C:\Users\HeidiDocuments\22205.04-IF&W-ARCH_v23_hgardnerYBPQX.rvt

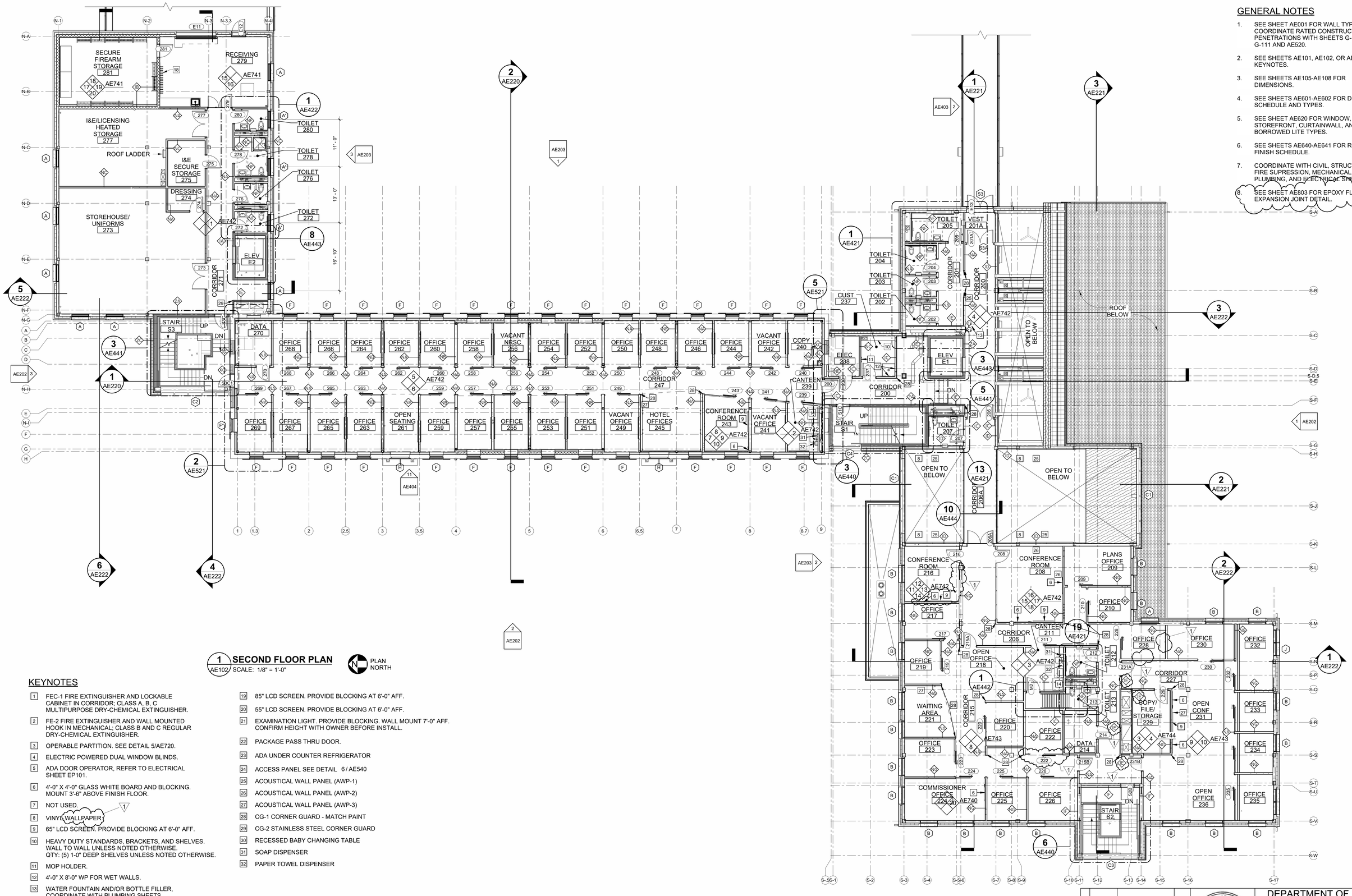

1 SECOND FLOOR PLAN
AE102 SCALE: 1/8" = 1'-0"

PLAN NORTH

KEYNOTES

1. FEC-1 FIRE EXTINGUISHER AND LOCKABLE CABINET IN CORRIDOR; CLASS A, B, C MULTIPURPOSE DRY-CHEMICAL EXTINGUISHER.
2. FE-2 FIRE EXTINGUISHER AND WALL MOUNTED HOOK IN MECHANICAL; CLASS B AND C REGULAR DRY-CHEMICAL EXTINGUISHER.
3. OPERABLE PARTITION. SEE DETAIL 5/AE720.
4. ELECTRIC POWERED DUAL WINDOW BLINDS.
5. ADA DOOR OPERATOR, REFER TO ELECTRICAL SHEET EP101.
6. 4'-0" X 4'-0" GLASS WHITE BOARD AND BLOCKING. MOUNT 3'-6" ABOVE FINISH FLOOR.
7. NOT USED.
8. VINYL WALLPAPER
9. 65" LCD SCREEN. PROVIDE BLOCKING AT 6'-0" AFF.
10. HEAVY DUTY STANDARDS, BRACKETS, AND SHELVES. WALL TO WALL UNLESS NOTED OTHERWISE. QTY: (5) 1-0" DEEP SHELVES UNLESS NOTED OTHERWISE.
11. MOP HOLDER.
12. 4'-0" X 8'-0" WP FOR WET WALLS.
13. WATER FOUNTAIN AND/OR BOTTLE FILLER, COORDINATE WITH PLUMBING SHEETS.
14. RESIDENTIAL REFRIGERATOR WITH ADA CONTROLS (NIC).
15. COUNTERTOP MICROWAVE (NIC).
16. COPIER (NIC).
17. FLUSH WALL ACCESS PANEL. BOTTOM 6" AFF.
18. WADER HANGER. BASIS OF DESIGN" RED HEAD WADER HANGER.
19. 85" LCD SCREEN. PROVIDE BLOCKING AT 6'-0" AFF.
20. 55" LCD SCREEN. PROVIDE BLOCKING AT 6'-0" AFF.
21. EXAMINATION LIGHT. PROVIDE BLOCKING. WALL MOUNT 7'-0" AFF. CONFIRM HEIGHT WITH OWNER BEFORE INSTALL.
22. PACKAGE PASS THRU DOOR.
23. ADA UNDER COUNTER REFRIGERATOR
24. ACCESS PANEL SEE DETAIL 6 / AE540
25. ACOUSTICAL WALL PANEL (AWP-1)
26. ACOUSTICAL WALL PANEL (AWP-2)
27. ACOUSTICAL WALL PANEL (AWP-3)
28. CG-1 CORNER GUARD - MATCH PAINT
29. CG-2 STAINLESS STEEL CORNER GUARD
30. RECESSED BABY CHANGING TABLE
31. SOAP DISPENSER
32. PAPER TOWEL DISPENSER

GENERAL NOTES

1. SEE SHEET AE001 FOR WALL TYPES. COORDINATE RATED CONSTRUCTION AND PENETRATIONS WITH SHEETS G-108 THRU G-111 AND AE520.
2. SEE SHEETS AE101, AE102, OR AE103 FOR KEYNOTES.
3. SEE SHEETS AE105-AE108 FOR DIMENSIONS.
4. SEE SHEETS AE601-AE602 FOR DOOR SCHEDULE AND TYPES.
5. SEE SHEET AE620 FOR WINDOW, STOREFRONT, CURTAINWALL, AND BORROWED LITE TYPES.
6. SEE SHEETS AE640-AE641 FOR ROOM FINISH SCHEDULE.
7. COORDINATE WITH CIVIL, STRUCTURAL, FIRE SUPRESSION, MECHANICAL, PLUMBING, AND ELECTRICAL SHEETS.
8. SEE SHEET AE803 FOR EPOXY FLOOR EXPANSION JOINT DETAIL.

GRAPHIC SCALE

1/8"=1'-0" 8' 4' 0 8' 16'

CHECK GRAPHIC SCALE BEFORE USING

NO.	DATE	DESCRIPTION	BY
1	02/13/2025	ADDENDUM NO.1	HMG

REVISIONS

DRAWN BY: MJD
CHECK BY: CET
DATE 01/29/2025

LICENSED ARCHITECT TYLER BOWER 1-29-25 STATE OF MAINE

DEPARTMENT OF INLAND FISHERIES & WILDLIFE

TITLE: NEW OFFICE HEADQUARTERS
LOCATION: AUGUSTA, ME
TITLE THIS DWG: SECOND FLOOR PLAN

OAK POINT ASSOCIATES
231 Main Street, Biddeford, Maine 04005 207.283.0199

DRAWING NO. AE102
SHEET NO. 101 OF 239

2/18/2025 1:46:58 PM
C:\Users\HeidiDocuments\22205.04-IF&W-ARCH_v22_hgardnerYBPQX.rvt

GENERAL NOTES

1. SEE SHEET AE001 FOR WALL TYPES. COORDINATE RATED CONSTRUCTION AND PENETRATIONS WITH SHEETS G-108 THRU G-111 AND AE520.
2. SEE SHEETS AE101, AE102, OR AE103 FOR KEYNOTES.
3. SEE SHEETS AE105-AE108 FOR DIMENSIONS.
4. SEE SHEETS AE601-AE602 FOR DOOR SCHEDULE AND TYPES.
5. SEE SHEET AE620 FOR WINDOW, STOREFRONT, CURTAINWALL, AND BORROWED LITE TYPES.
6. SEE SHEETS AE640-AE641 FOR ROOM FINISH SCHEDULE.
7. COORDINATE WITH CIVIL, STRUCTURAL, FIRE SUPRESSION, MECHANICAL, PLUMBING, AND ELECTRICAL SHEETS.
8. SEE SHEET AE803 FOR EPOXY FLOOR EXPANSION JOINT DETAIL.

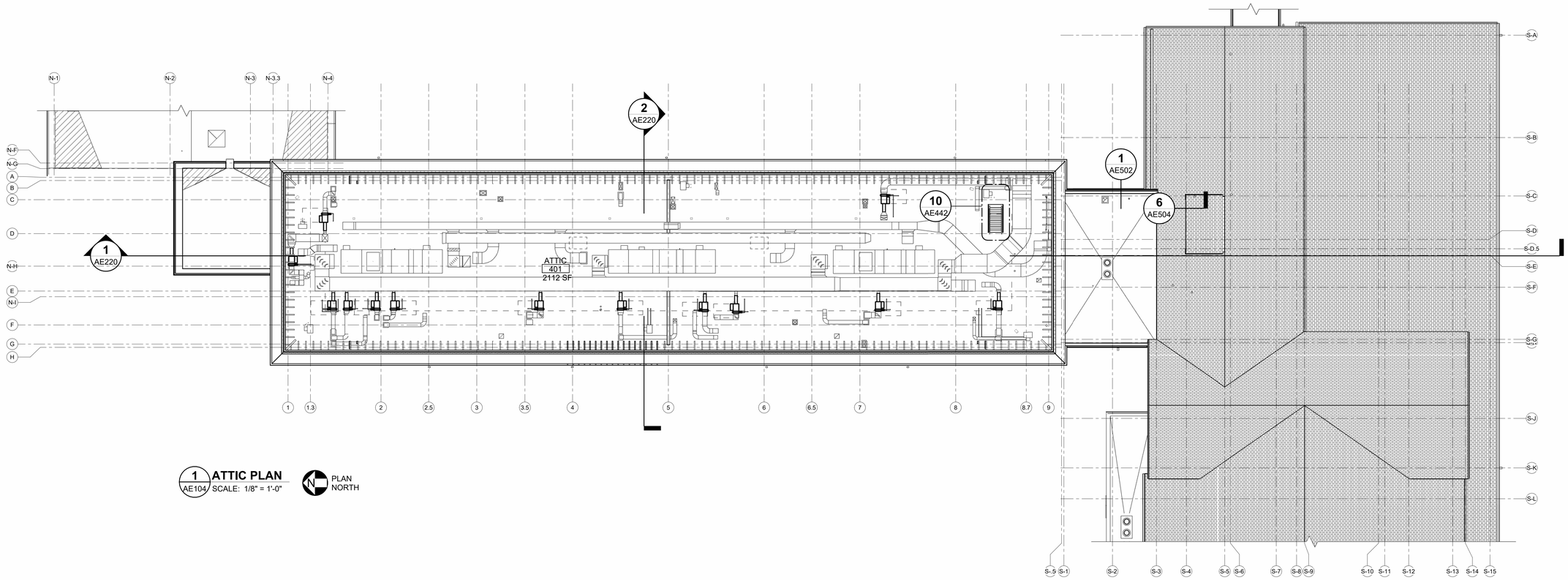

1 ATTIC PLAN
AE104 SCALE: 1/8" = 1'-0"

PLAN NORTH

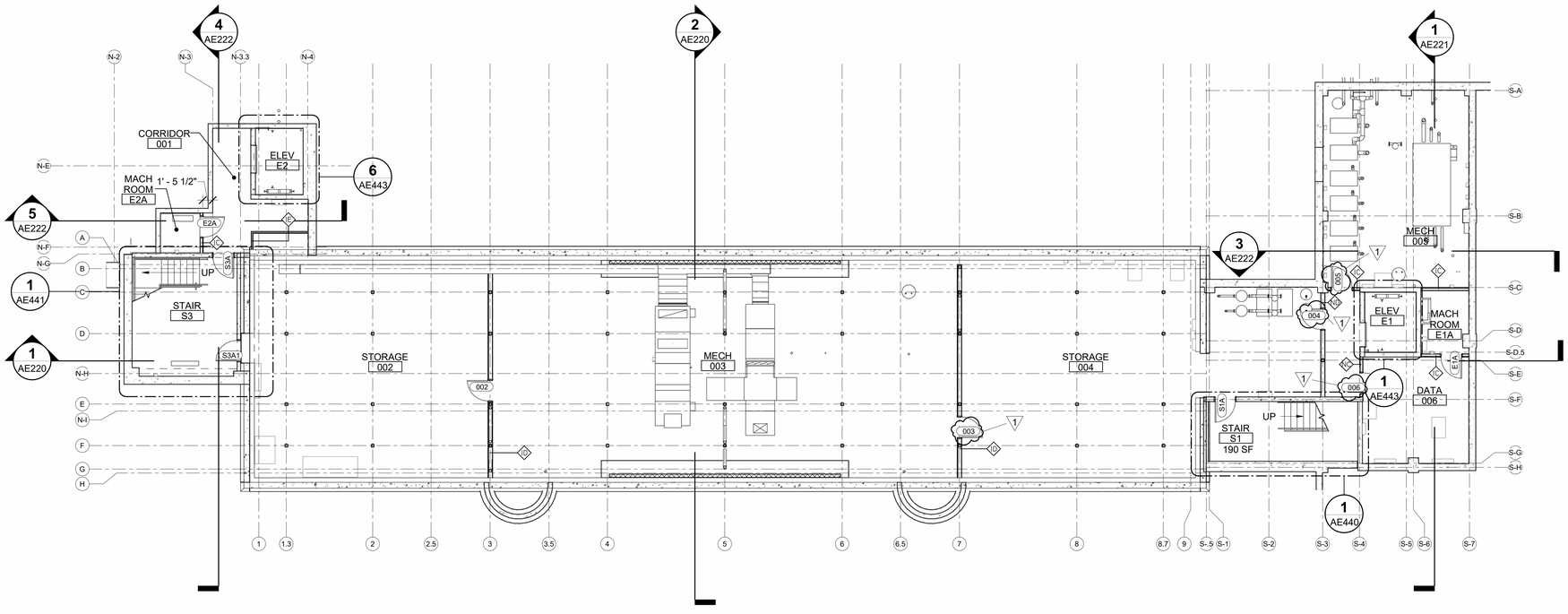

2 BASEMENT PLAN
AE104 SCALE: 1/8" = 1'-0"

PLAN NORTH

GRAPHIC SCALE

1/8"=1'-0" 8' 4' 0 8' 16'

CHECK GRAPHIC SCALE BEFORE USING

NO.	DATE	DESCRIPTION	BY
1	02/13/2025	ADDENDUM NO.1	HMG

REVISIONS

DRAWN BY: MJD
CHECK BY: CET
DATE 01/29/2025

LICENSED ARCHITECT TYLER E. TOBIN 1-29-25 STATE OF MAINE

DEPARTMENT OF INLAND FISHERIES & WILDLIFE

TITLE NEW OFFICE HEADQUARTERS
LOCATION AUGUSTA, ME
TITLE THIS DWG. BASEMENT AND ATTIC FLOOR PLANS

OAK POINT ASSOCIATES
231 Main Street, Biddeford, Maine 04005 207.283.0193

DRAWING NO. AE104
SHEET NO. 103 OF 239

2/13/2025 12:33:36 PM
C:\Users\Heidi\Documents\22205.04-IF&W-ARCH_v22_hgardnerYBPQX.rvt

GENERAL NOTES

1. SEE SHEETS AE420 - AE422 FOR WALL DIMENSIONS AT TOILET ROOMS.
2. SEE SHEETS AE440 - AE443 FOR WALL DIMENSIONS AT STAIRS AND ELEVATORS.

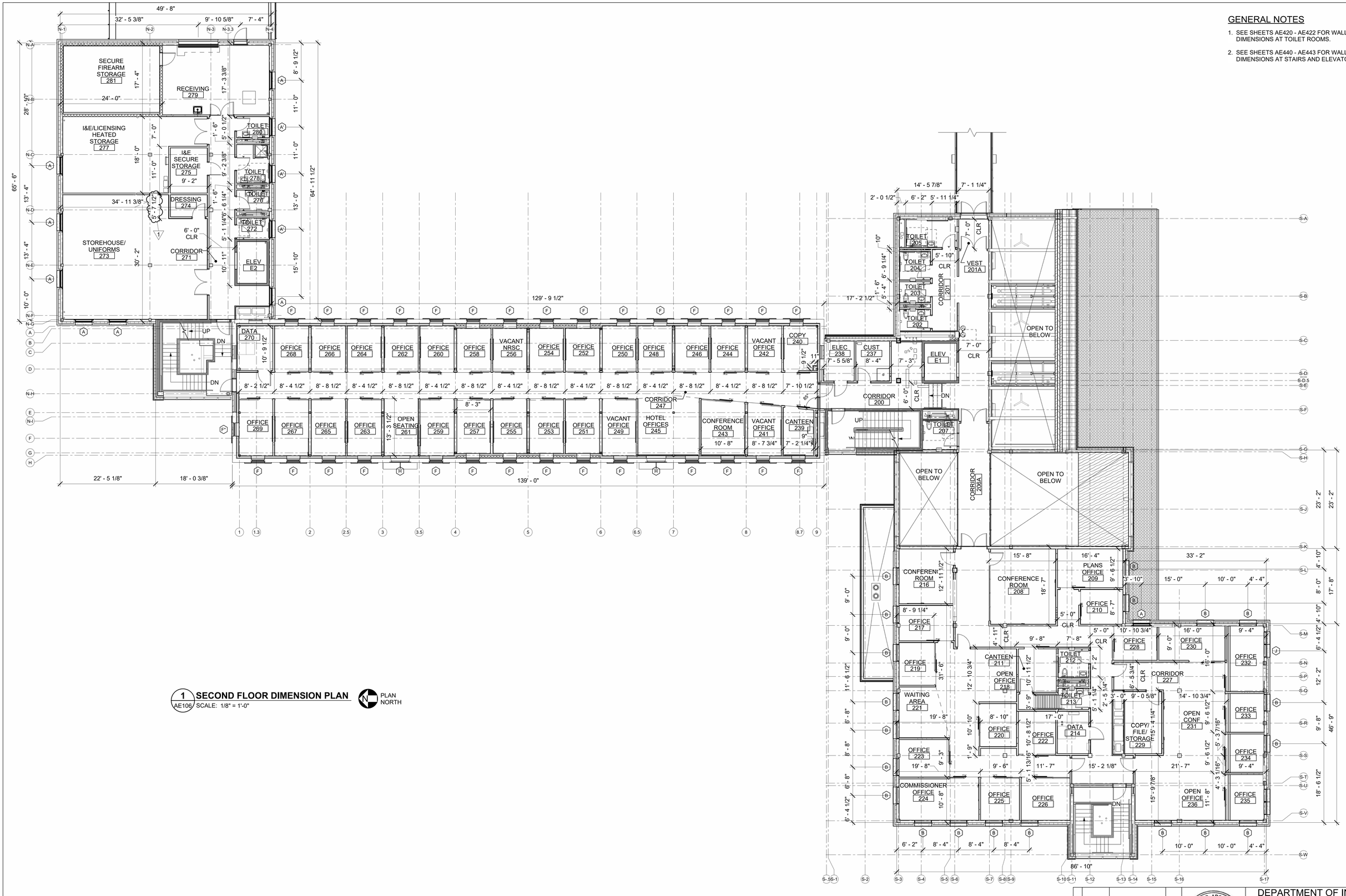

1 SECOND FLOOR DIMENSION PLAN
AE106 SCALE: 1/8" = 1'-0"

PLAN NORTH

GRAPHIC SCALE

1/8"=1'-0"

8' 4' 0 8' 16'

CHECK GRAPHIC SCALE BEFORE USING

NO.	DATE	DESCRIPTION	BY
1	02/13/2025	ADDENDUM NO.1	HMG
		REVISIONS	

DRAWN BY: CET
CHECK BY: TGB
NO.
DATE 01/29/2025

LICENSED ARCHITECT TYLER G. BAUER 1-29-25 STATE OF MAINE

DEPARTMENT OF INLAND FISHERIES & WILDLIFE

TITLE: NEW OFFICE HEADQUARTERS

LOCATION: AUGUSTA, ME

TITLE THIS DWG: SECOND FLOOR DIMENSION PLAN

OAK POINT ASSOCIATES

231 Main Street, Biddeford, Maine 04005 207.283.0193

DRAWING NO: AE106

SHEET NO: 105 OF 239

2/13/2025 12:34:00 PM
C:\Users\HeidiDocuments\22205.04-IF&W-ARCH_v22_hgardner\BPQX.rvt

1 SOUTH ELEVATION
AE101 AE202 SCALE: 1/8" = 1'-0"

GENERAL NOTES

1. SEE SHEETS AE601-AE602 FOR DOOR SCHEDULE AND TYPES.
2. SEEE SHEET AE620 FOR WINDOW, STOEFRONT, CURTAINWALL, AND BORROWED LITE TYPES.
3. COORDINATE WITH CIVIL, STRUCTURAL, FIRE SUPRESSION, MECHANICAL, PLUMBING, AND ELECTRICAL SHEETS.

GENERAL MATERIALS KEYNOTES

TAG	MATERIAL	DESCRIPTION
EF-1	GALVANIZED FASICA	FASCIA AND DECORATIVE TRIM, TO MATCH ORIGINAL
EG-1	GUTTER SYSTEM	COPPER GUTTERS AND DOWNSPOUTS, TO MATCH ORIGNIAL
EM-1	BRICK MASONRY	EXISTING BRICK WALLS ARE 3 WYTHES THICK.
F-1	FASCIA TYPE	METAL FASCIA CLIP
G-1	GUTTER SYSTEM	METAL GUTTER SYSTEM AND DOWNSPOUT
M-1	MASONRY STONE VENEER	ARRISCRAFT
R-1	ASPHALT ROOF (CETA)	CERTAINTEED, LANDMARK, HUNTER GREEN
R-2	ASPHALT ROOF	CERTAINTEED, LANDMARK, HUNTER GREEN
S-1	DIMENSIONAL LETTER SIGNAGE	CAST ALUMINUM CHARTACTERS, 12" HIGH
W-1	FIBER CEMENT PANEL SIDING	NICHIHA, VINTAGEWOOD CEMENTITIOUS SIDING, CEDAR

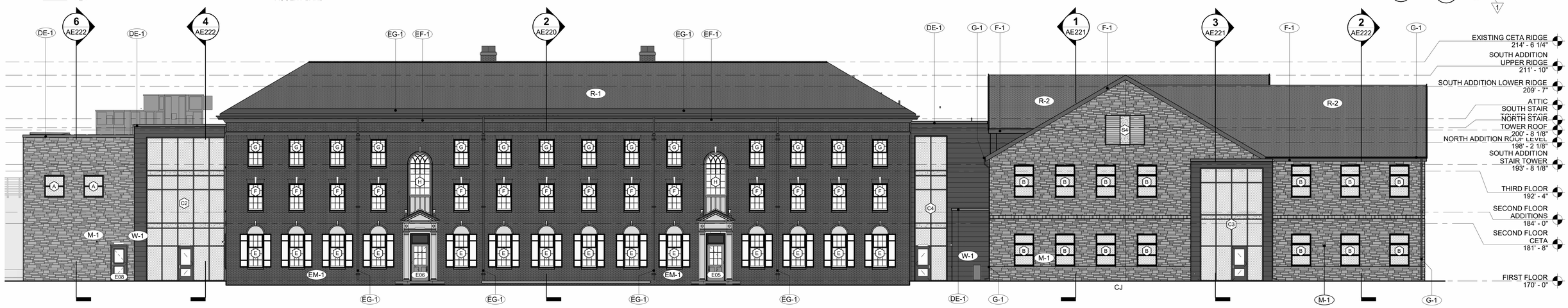

2 WEST ELEVATION
AE101 AE202 SCALE: 1/8" = 1'-0"

3 NORTH ELEVATON
AE101 AE202 SCALE: 1/8" = 1'-0"

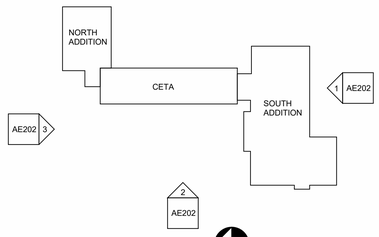

KEYPLAN
NOT TO SCALE
PLAN NORTH

GRAPHIC SCALE
1/8"=1'-0"
8' 4' 0 8' 16'
CHECK GRAPHIC SCALE BEFORE USING

NO.	DATE	DESCRIPTION	BY
1	02/13/2025	ADDENDUM NO.1	HMG
		REVISIONS	

LICENSED ARCHITECT TYLER B. CARTER No. 4362 STATE OF MAINE

DRAWN BY: MJD
CHECK BY: CET
NO.
DATE 01/29/2025

DEPARTMENT OF INLAND FISHERIES & WILDLIFE
TITLE: NEW OFFICE HEADQUARTERS
LOCATION: AUGUSTA, ME
TITLE THIS DWG.: BUILDING ELEVATIONS 1

OAK POINT ASSOCIATES
231 Main Street, Biddeford, Maine 04005 207.283.0193

DRAWING NO. AE202
SHEET NO. 110 OF 239

2/13/2025 12:35:19 PM
C:\Users\HeidiDocuments\22205.04-IF&W-ARCH_v22_hgardnerYBPQX.rvt

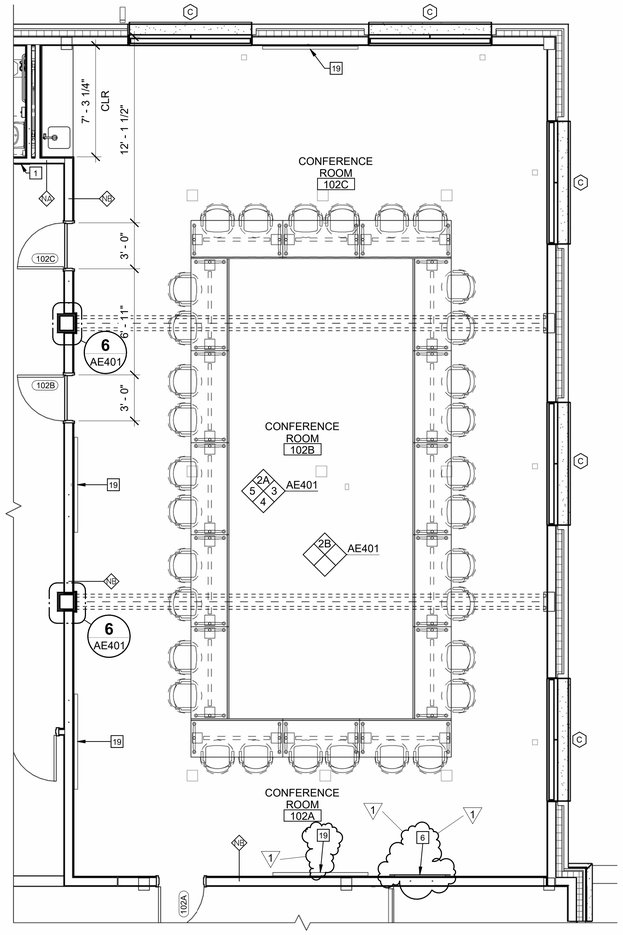

1 CONFERENCE ROOM 102 ENLARGED PLAN
AE101 AE401 SCALE: 1/4" = 1'-0"

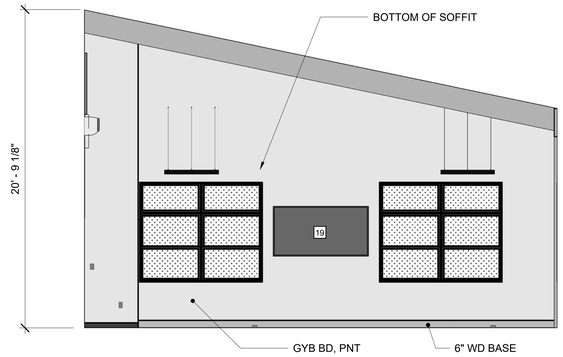

2A CONFERENCE ROOM 102 EAST ELEVATION
AE101 AE401 SCALE: 1/4" = 1'-0"

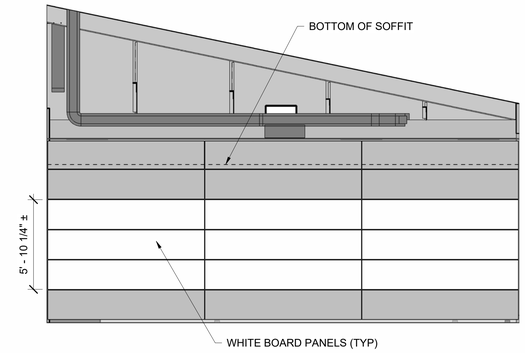

2B CONFERENCE ROOM 102 EAST ELEVATION PANELS CLOSED
AE101 AE401 SCALE: 1/4" = 1'-0"

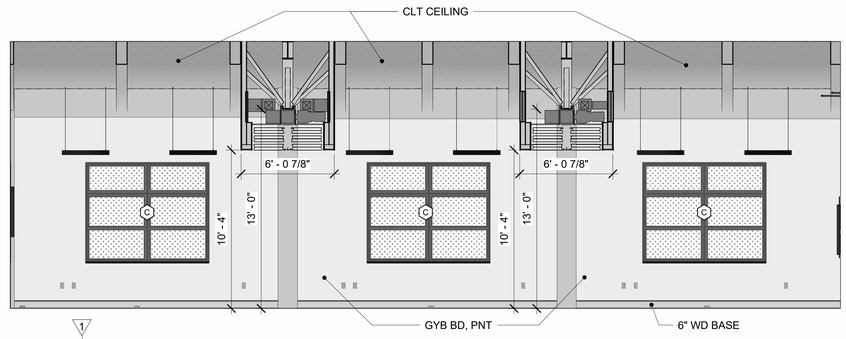

3 CONFERENCE ROOM 102 SOUTH ELEVATION
AE101 AE401 SCALE: 1/4" = 1'-0"

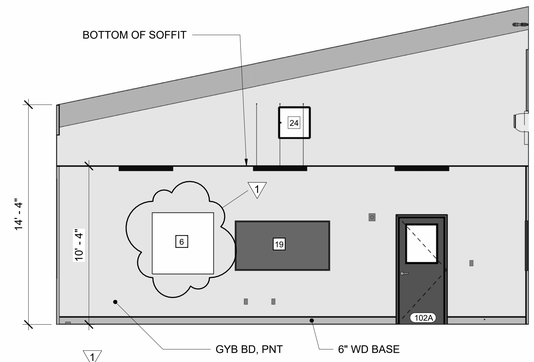

4 CONFERENCE ROOM 102 WEST ELEVATION
AE101 AE401 SCALE: 1/4" = 1'-0"

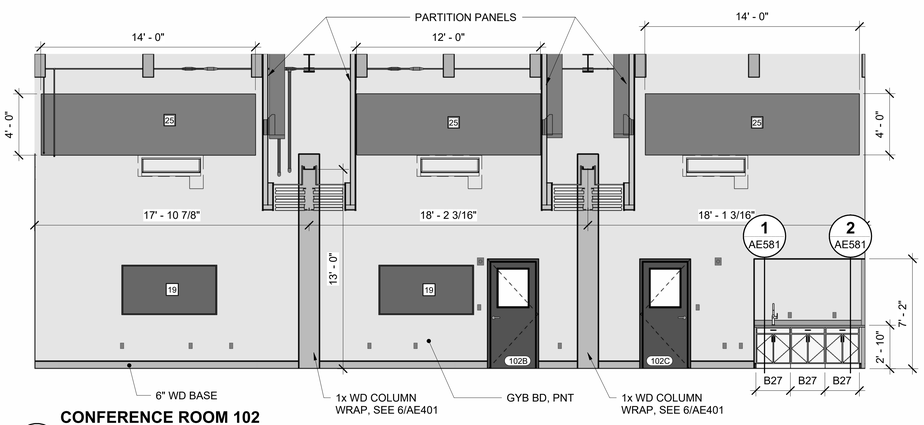

5 CONFERENCE ROOM 102 WEST ELEVATION
AE101 AE401 SCALE: 1/4" = 1'-0"

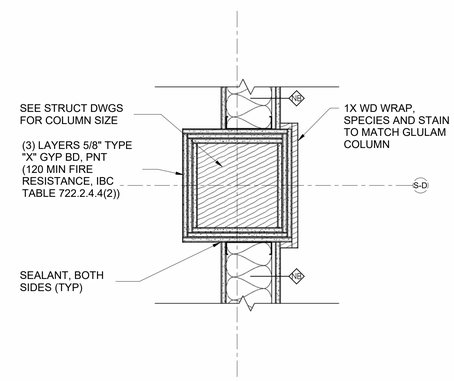

6 CONFERENCE ROOM 102 2 HOUR RATED COLUMN DETAIL
AE401 AE401 SCALE: 1 1/2" = 1'-0"

GRAPHIC SCALES

1-1/2"=1'-0" 1' 8" 4" 0 1'

1/4"=1'-0" 4' 2' 0 4' 8'

CHECK GRAPHIC SCALES BEFORE USING

NO.	DATE	REVISIONS	BY
1	02/13/2025	ADDENDUM NO.1	HMG

LICENSED ARCHITECT TYLER J. BARTLER 1-29-25 STATE OF MAINE

DEPARTMENT OF INLAND FISHERIES & WILDLIFE

TITLE: NEW OFFICE HEADQUARTERS

LOCATION: AUGUSTA, ME

TITLE THIS DWG.: CONFERENCE ROOM 102 ENLARGED PLAN, INTERIOR ELEVATIONS AND DETAILS

DRAWN BY: MJD
CHECK BY: CET
NO.
DATE 01/29/2025

OAK POINT ASSOCIATES
231 Main Street, Biddeford, Maine 04005 207.283.0193

DRAWING NO. AE401

SHEET NO. 118 OF 239

2/19/2025 9:37:08 AM
C:\Users\Heidi\Documents\22205.04-IF&W-ARCH_v22_hgardnerYBPQX.rvt

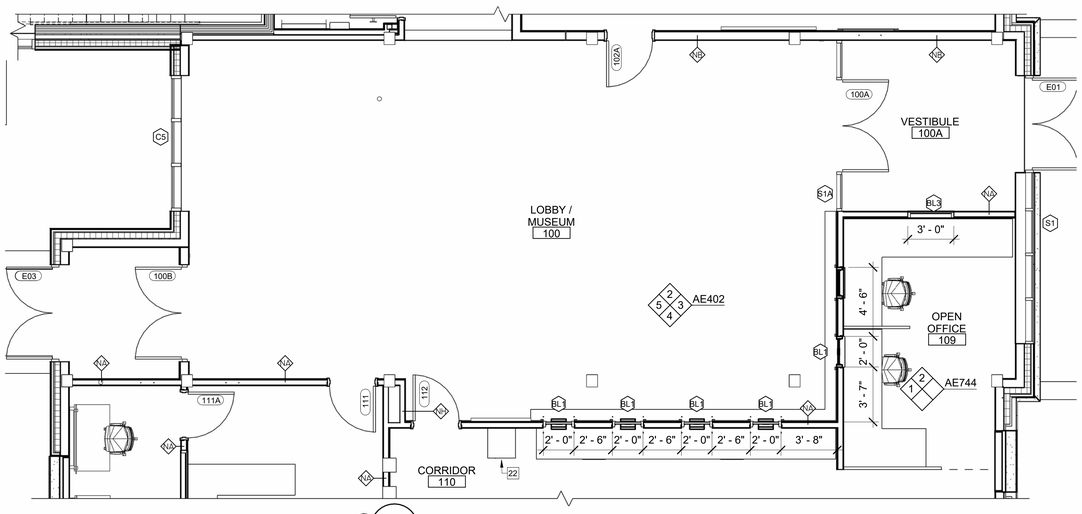

1 LOBBY 100 ENLARGED PLAN
AE101 AE402 SCALE: 1/4" = 1'-0"

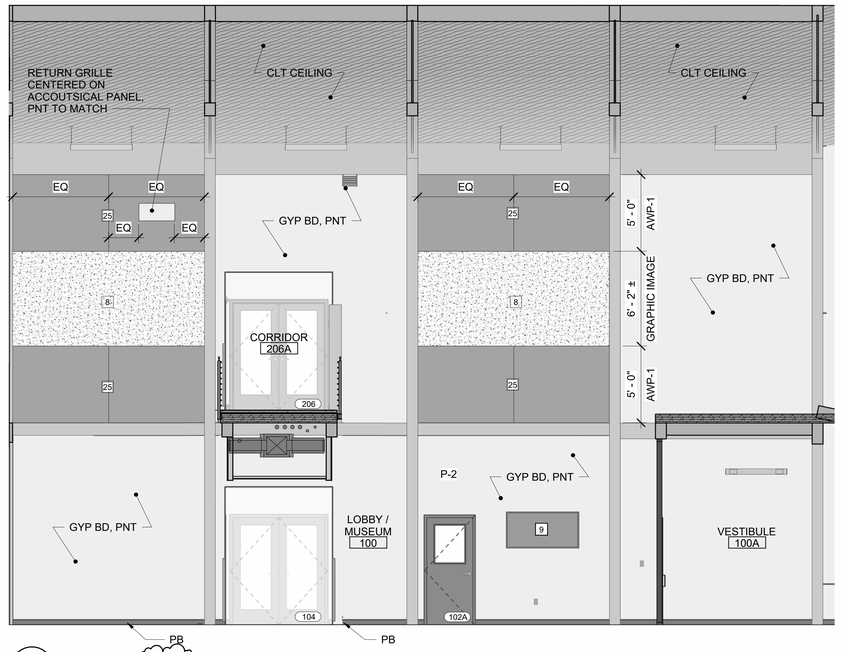

2 LOBBY 100 EAST ELEVATION
AE402 AE402 SCALE: 1/4" = 1'-0"

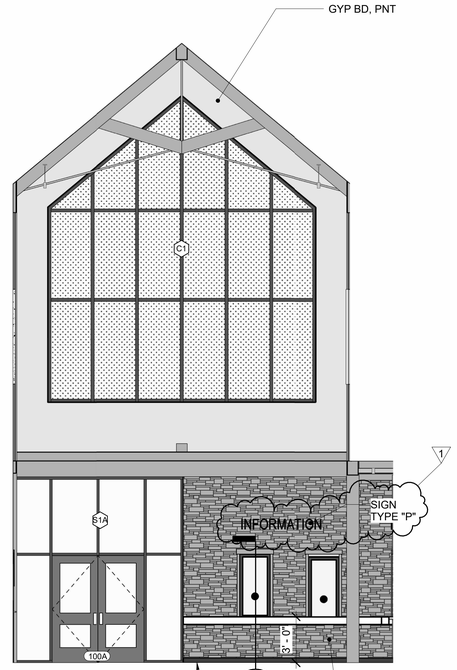

3 LOBBY 100 SOUTH ELEVATION
AE402 AE402 SCALE: 1/4" = 1'-0"

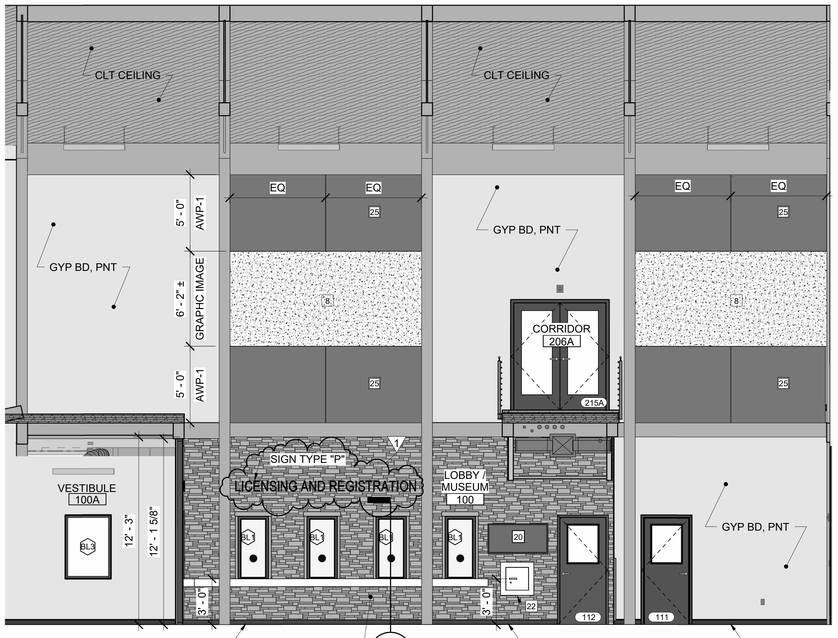

4 LOBBY 100 WEST ELEVATION
AE402 AE402 SCALE: 1/4" = 1'-0"

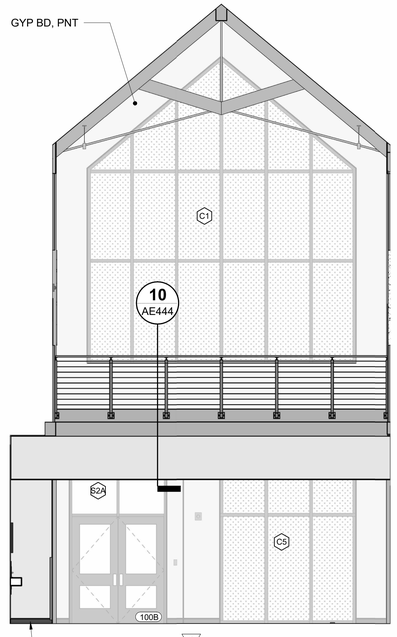

5 LOBBY 100 NORTH ELEVATION
AE402 AE402 SCALE: 1/4" = 1'-0"

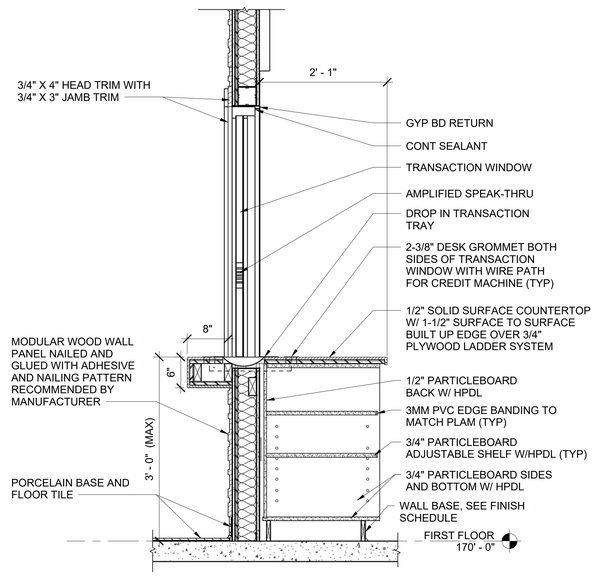

6 LOBBY TRANSACTION WINDOW COUNTER DETAIL
AE101 AE402 SCALE: 1" = 1'-0"

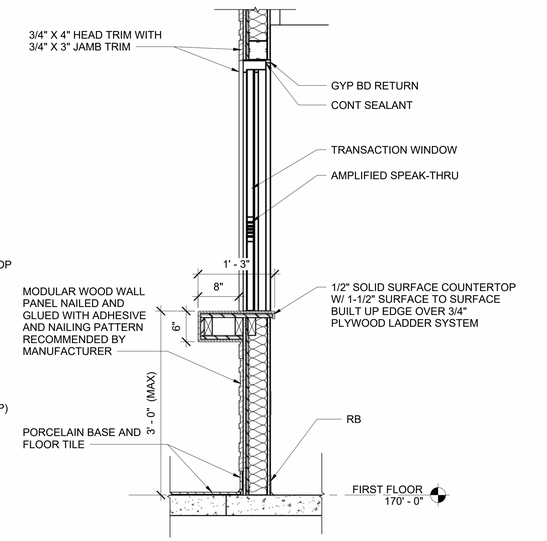

7 LOBBY WINDOW COUNTER DETAIL WITHOUT TRANSATION TRAY
AE402 AE402 SCALE: 1" = 1'-0"

GRAPHIC SCALES

1/4"=1'-0" 4' 2' 0 4' 8'

1"=1'-0" 1' 6" 0 1' 2'

CHECK GRAPHIC SCALES BEFORE USING

NO.	DATE	DESCRIPTION	BY
1	02/13/2025	ADDENDUM NO.1	HMG
		REVISIONS	

LICENSED ARCHITECT TYLER E. SHAW 1-29-25 STATE OF MAINE

DRAWN BY: MJD
CHECK BY: CET
NO.
DATE 01/29/2025

DEPARTMENT OF INLAND FISHERIES & WILDLIFE

TITLE NEW OFFICE HEADQUARTERS
LOCATION AUGUSTA, ME
TITLE THIS DWG. LOBBY ENLARGED PLAN, INTERIOR ELEVATIONS AND DETAILS

OAK POINT ASSOCIATES
231 Main Street, Biddeford, Maine 04005 207.283.0193

DRAWING NO. AE402
SHEET NO. 119 OF 239

2/19/2025 9:48:57 AM
C:\Users\Heidi\Documents\22205.04-IF&W-ARCH_v22_hgardnerYBPQX.rvt

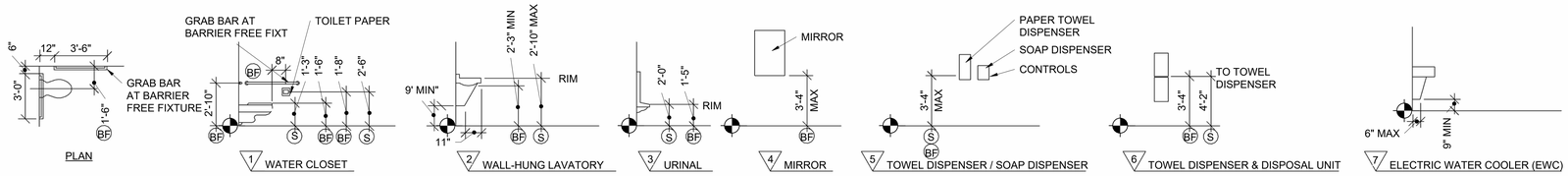

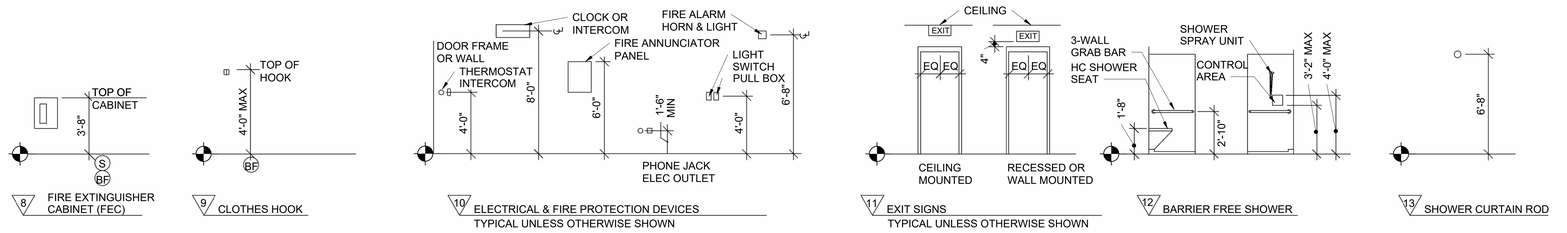

RESTROOM ACCESSORY SCHEDULE

LTR	ITEM	COMMENTS
A	TOILET TISSUE DISPENSER	BOBRICK, B4288
B	RECESSED CONVERTIBLE AUTO ROLL TOWEL DISPENSER / WASTE RECEPTACLE	BOBRICK, B3974
C	AUTOMATIC SOAP DISPENSER (WALL MOUNTED)	BOBRICK, B-2012
D	NOT USED	
E	1 1/2" DIAMETER GRAB RAIL	
F	MIRROR 24X42	BOBRICK B-290 GLASS MIRROR WITH SS ANGLE FRAME
G	CHANGING STATION	KOALA, KB310-SSWM HORIZONTAL STAINLESS STEEL SURFACE-MOUNTED
H	SHOWER CURTAIN WITH ROD	BOBRICK B-6107 AND 204-2
I	HC SHOWER GRAB BAR	INCLUDED IN SHOWER SPECIFICATION
J	HC SHOWER SEAT	INCLUDED IN SHOWER SPECIFICATION
K	CLOTHES HOOK	BOBRICK B-76727 SURFACE-MOUNTED DOUBLE ROBE HOOK

GENERAL NOTES

1. SEE SHEETS AE101, AE102, OR AE103 FOR KEYNOTES.
2. SEE SHEET AE420 FOR MOUNTING HEIGHTS AND RESTROOM ACCESSORY SCHEDULE.
3. SEE 17/AE422 FOR TILE PATTERN ELEVATION.
4. SEE SHEETS AE601-AE602 FOR DOOR SCHEDULE AND TYPES.
5. SEE SHEETS AE640-AE641 FOR ROOM FINISH SCHEDULE.
6. COORDINATE BLOCKING LOCATIONS W/ ACCESSORY ITEMS SUPPLIED BY OWNER.

1

1 STANDARD MOUNTING HEIGHTS
AE420 SCALE: NTS

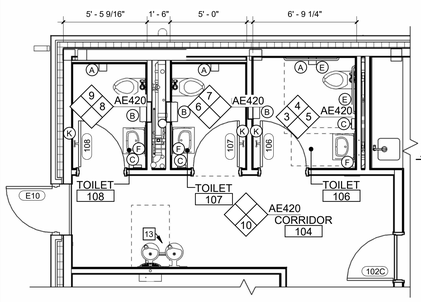

2 RESTROOM 106, 107, 108 ENLARGED FLOOR PLAN
AE101 AE420 SCALE: 1/4" = 1'-0"

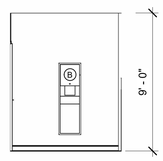

3 RESTROOM106 NORTH ELEVATION
AE420 SCALE: 1/4" = 1'-0"

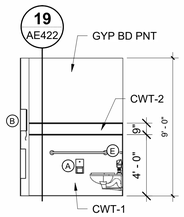

4 RESTROOM 106 EAST ELEVATION
AE420 SCALE: 1/4" = 1'-0"

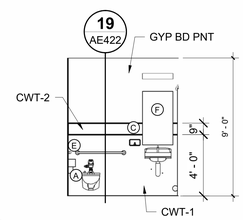

5 RESTROOM 106 SOUTH ELEVATION
AE420 SCALE: 1/4" = 1'-0"

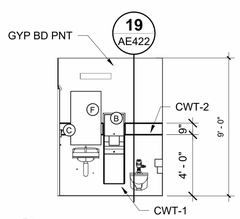

6 RESTROOM 107 NORTH ELEVATION
AE420 SCALE: 1/4" = 1'-0"

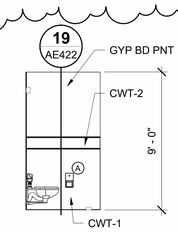

7 RESTROOM 107 EAST ELEVATION
AE420 SCALE: 1/4" = 1'-0"

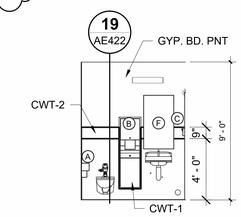

8 RESTROOM 108 SOUTH ELEVATION
AE420 SCALE: 1/4" = 1'-0"

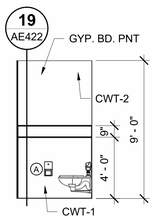

9 RESTROOM 108 EAST ELEVATION
AE420 SCALE: 1/4" = 1'-0"

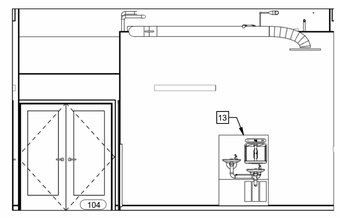

10 CORRIDOR 104 WEST ELEVATION
AE420 SCALE: 1/4" = 1'-0"

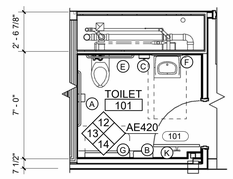

11 RESTROOM 101 ENLARGED PLAN
AE101 AE420 SCALE: 1/4" = 1'-0"

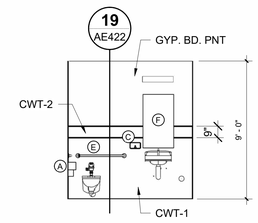

12 RESTROOM 101 EAST ELEVATION
AE420 SCALE: 1/4" = 1'-0"

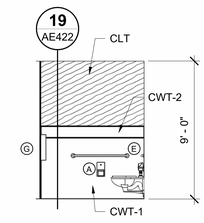

13 RESTROOM 101 NORTH ELEVATION
AE420 SCALE: 1/4" = 1'-0"

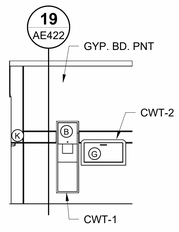

14 RESTROOM 101 WEST ELEVATION
AE420 SCALE: 1/4" = 1'-0"

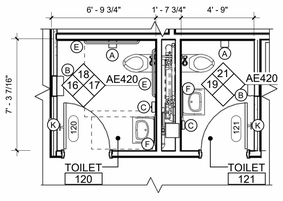

15 RESTROOM 120 & 121 ENLARGED PLAN
AE101 AE420 SCALE: 1/4" = 1'-0"

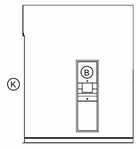

16 RESTROOM 120 NORTH ELEVATION
AE420 SCALE: 1/4" = 1'-0"

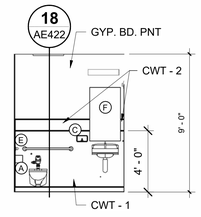

17 RESTROOM 120 SOUTH ELEVATION
AE420 SCALE: 1/4" = 1'-0"

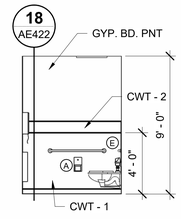

18 RESTROOM 120 EAST ELEVATION
AE420 SCALE: 1/4" = 1'-0"

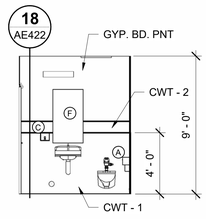

19 RESTROOM 121 NORTH ELEVATION
AE420 SCALE: 1/4" = 1'-0"

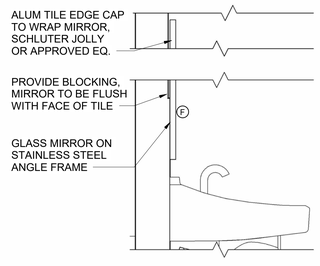

25 DETAIL AT EDGE OF MIRROR,TYP
AE420 SCALE: 1 1/2" = 1'-0"

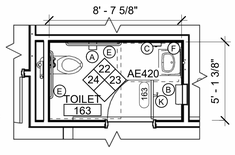

20 RESTROOM 163 ENLARGED PLAN
AE101 AE420 SCALE: 1/4" = 1'-0"

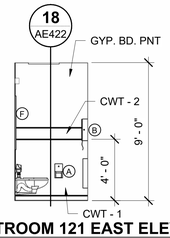

21 RESTROOM 121 EAST ELEVATION
AE420 SCALE: 1/4" = 1'-0"

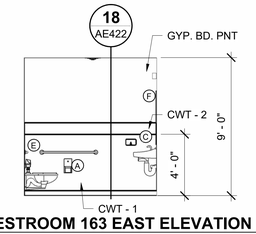

22 RESTROOM 163 EAST ELEVATION
AE420 SCALE: 1/4" = 1'-0"

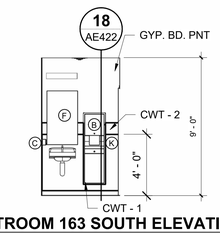

23 RESTROOM 163 SOUTH ELEVATION
AE420 SCALE: 1/4" = 1'-0"

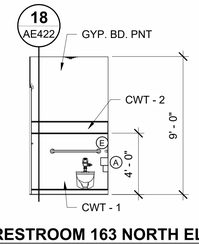

24 RESTROOM 163 NORTH ELEVATION
AE420 SCALE: 1/4" = 1'-0"

GRAPHIC SCALES

1-1/2"=1'-0" 1' 8" 4" 0 1'

1/4"=1'-0" 4' 2' 0 4' 8'

CHECK GRAPHIC SCALES BEFORE USING

NO.	DATE	DESCRIPTION	BY
1	02/13/2025	ADDENDUM NO.1	HMG

REVISIONS

LICENSED ARCHITECT TYLER B. BEAL 1-23-2025 STATE OF MAINE

DRAWN BY: MJD
CHECK BY: CET
DATE 01/29/2025

DEPARTMENT OF INLAND FISHERIES & WILDLIFE

TITLE: NEW OFFICE HEADQUARTERS
LOCATION: AUGUSTA, ME
TITLE THIS DWG: MOUNTING HEIGHTS, RESTROOM ENLARGED PI PLANS AND INTERIOR ELEVATIONS 1

OAK POINT ASSOCIATES
231 Main Street, Biddeford, Maine 04005 207.283.0193

DRAWING NO. AE420
SHEET NO. 122 OF 239

2/13/2025 12:36:36 PM
C:\Users\Heidi\Documents\22205.04-IF&W-ARCH_v22_hgardnerYBPQX.rvt

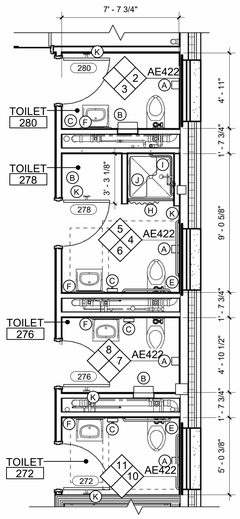

RESTROOM 276, 278, & 280 ENLARGED PLAN
1 AE422 / AE102 SCALE: 1/4" = 1'-0"

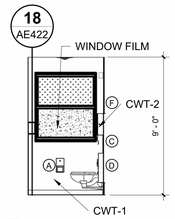

RESTROOM 280 SOUTH ELEVATION
2 AE422 / AE422 SCALE: 1/4" = 1'-0"

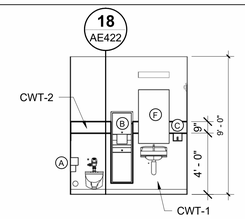

RESTROOM 280 WEST ELEVATION
3 AE422 / AE422 SCALE: 1/4" = 1'-0"

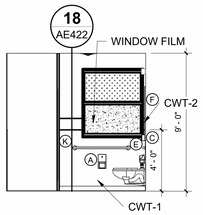

RESTROOM 278 SOUTH ELEVATION
4 AE422 / AE422 SCALE: 1/4" = 1'-0"

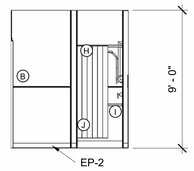

RESTROOM 278 EAST ELEVATION
5 AE422 / AE422 SCALE: 1/4" = 1'-0"

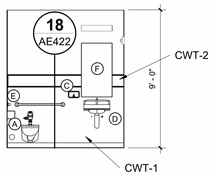

RESTROOM 278 WEST ELEVATION
6 AE422 / AE422 SCALE: 1/4" = 1'-0"

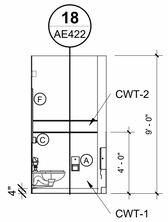

RESTROOM 276 SOUTH ELEVATION
7 AE422 / AE422 SCALE: 1/4" = 1'-0"

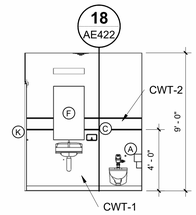

RESTROOM 276 EAST ELEVATION
8 AE422 / AE422 SCALE: 1/4" = 1'-0"

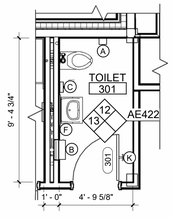

RESTROOM 301 ENLARGED PLAN
9 AE422 / AE103 SCALE: 1/4" = 1'-0"

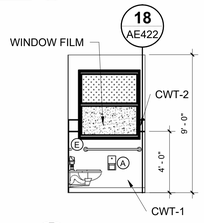

RESTROOM 272 SOUTH ELEVATION
10 AE422 / AE422 SCALE: 1/4" = 1'-0"

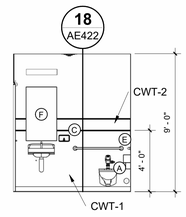

RESTROOM 272 EAST ELEVATION
11 AE422 / AE422 SCALE: 1/4" = 1'-0"

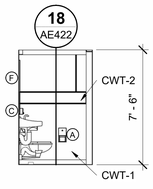

RESTROOM 301 EAST ELEVATION
12 AE422 / AE422 SCALE: 1/4" = 1'-0"

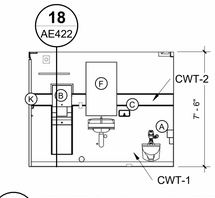

RESTROOM 301 NORTH ELEVATION
13 AE422 / AE422 SCALE: 1/4" = 1'-0"

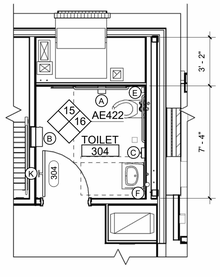

RESTROOM 304 ENLARGED PLAN & CORRIDOR 300
14 AE422 / AE103 SCALE: 1/4" = 1'-0"

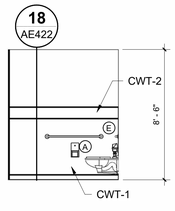

RESTROOM 304 EAST ELEVATION
15 AE422 / AE422 SCALE: 1/4" = 1'-0"

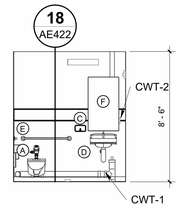

RESTROOM 304 SOUTH ELEVATION
16 AE422 / AE422 SCALE: 1/4" = 1'-0"

GENERAL NOTES

1. SEE SHEETS AE101, AE102, OR AE103 FOR KEYNOTES.
2. SEE SHEET AE420 FOR MOUNTING HEIGHTS AND RESTROOM ACCESSORY SCHEDULE.
3. SEE 17/AE422 FOR TILE PATTERN ELEVATION.
4. SEE SHEETS AE601-AE602 FOR DOOR SCHEDULE AND TYPES.
5. SEE SHEETS AE640-AE641 FOR ROOM FINISH SCHEDULE.
6. COORDINATE BLOCKING LOCATIONS W/ ACCESSORY ITEMS SUPPLIED BY OWNER.

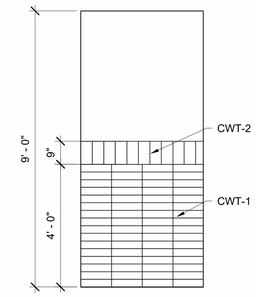

TILE PATTERN ELEVATION
17 AE422 / AE422 SCALE: 1/2" = 1'-0"

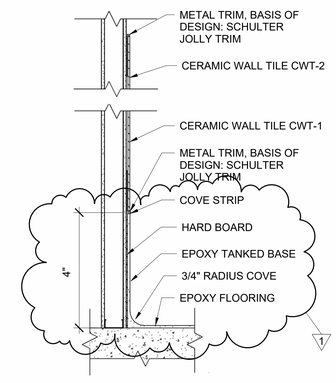

EPOXY FLOOR AND WALL TILE DETAIL
18 AE422 / AE420 SCALE: 1" = 1'-0"

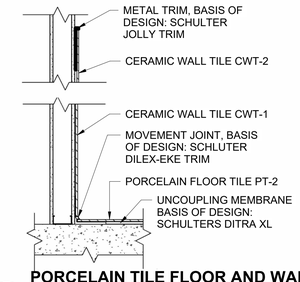

PORCELAIN TILE FLOOR AND WALL TILE DETAIL
19 AE422 / AE420 SCALE: 1" = 1'-0"

GRAPHIC SCALES

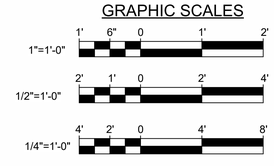

CHECK GRAPHIC SCALES BEFORE USING

NO.	DATE	DESCRIPTION	BY
1	02/13/2025	ADDENDUM NO.1	HMG
		REVISIONS	

LICENSED ARCHITECT TYLER J. BOLTON No. 4362 STATE OF MAINE

DRAWN BY: MJD
CHECK BY: CET
NO.
DATE 01/29/2025

DEPARTMENT OF INLAND FISHERIES & WILDLIFE

TITLE: NEW OFFICE HEADQUARTERS
LOCATION: AUGUSTA, ME
TITLE THIS DWG: RESTROOM ENLARGED PLAN AND INTERIOR ELEVATION 3

OAK POINT ASSOCIATES
231 Main Street, Biddeford, Maine 04005 207.283.0193

DRAWING NO. AE422
SHEET NO. 124 OF 239

2/13/2025 12:37:03 PM
C:\Users\NeilD\Documents\22205.04-IF&W-ARCH_v22_hgardnerYBPQX.rvt

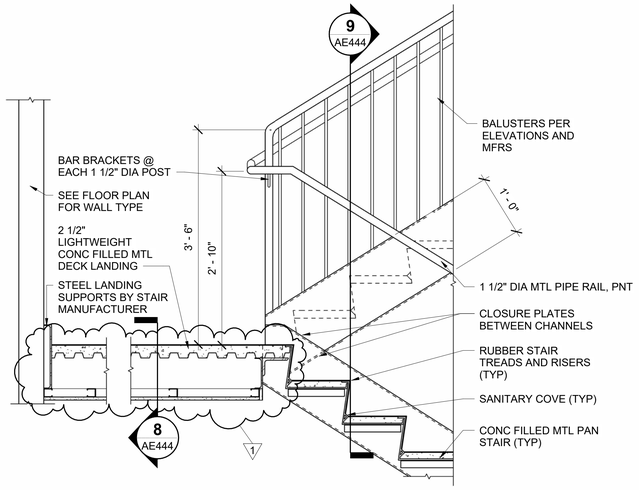

1 STAIR LANDING DETAIL (TYP)
AE440 AE444 SCALE: 1" = 1'-0"

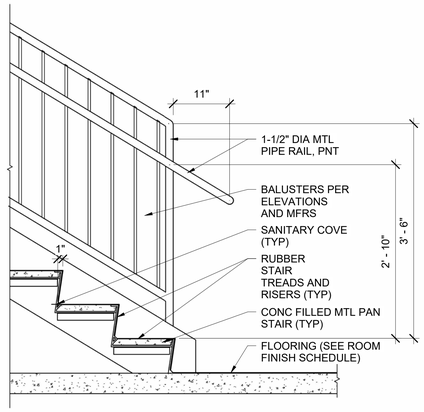

2 STAIR RUN BOTTOM LANDING (TYP)
AE440 AE444 SCALE: 1" = 1'-0"

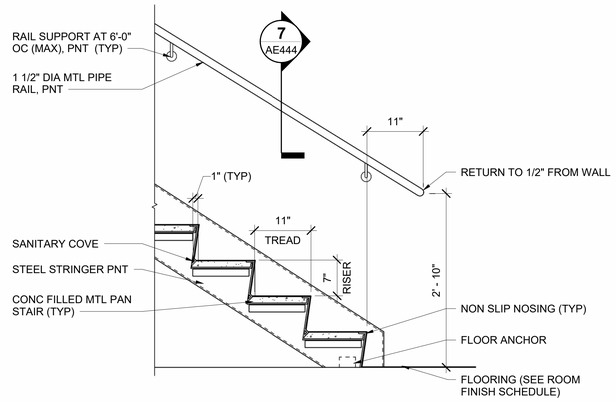

3 STAIR RUN DETAIL (TYP)
AE440 AE444 SCALE: 1" = 1'-0"

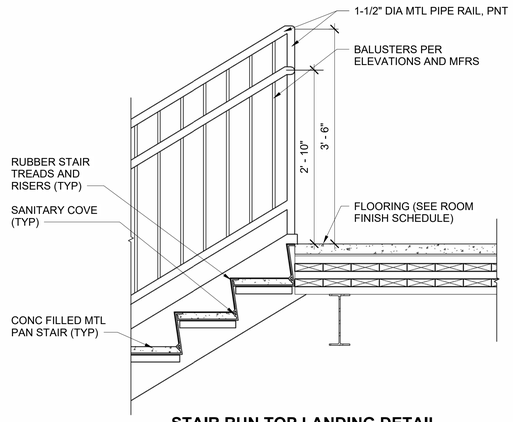

4 STAIR RUN TOP LANDING DETAIL (TYP)
AE440 AE444 SCALE: 1" = 1'-0"

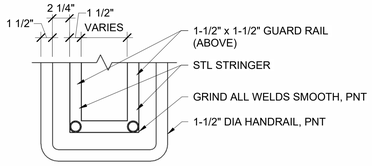

5 STAIR NEWEL POST DETAIL (TYP)
AE444 AE444 SCALE: 1 1/2" = 1'-0"

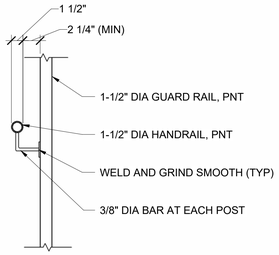

6 STAIR BRACKET DETAIL (TYP)
AE444 AE444 SCALE: 1 1/2" = 1'-0"

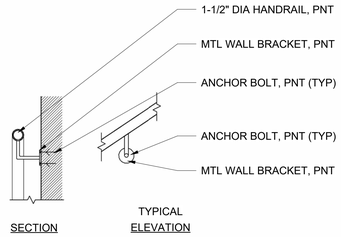

7 STAIR RAILING DETAIL (TYP)
AE444 AE444 SCALE: 1 1/2" = 1'-0"

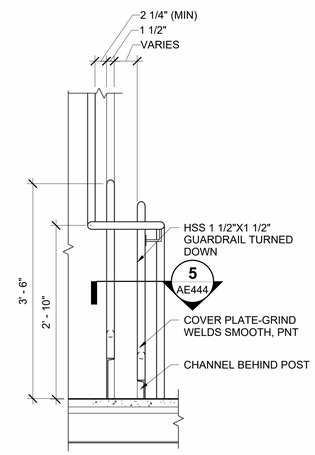

8 STAIR RAILING ELEVATION (TYP)
AE444 AE444 SCALE: 1" = 1'-0"

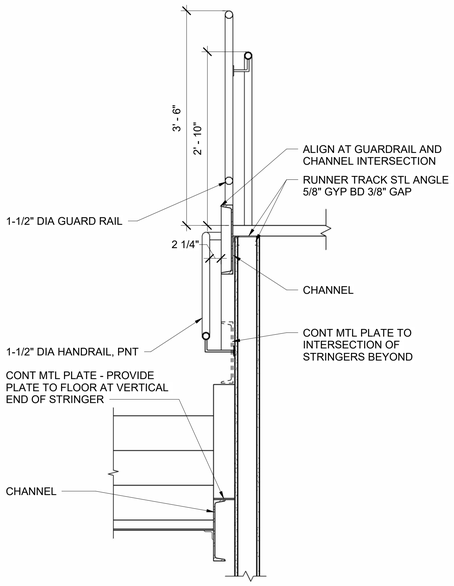

9 STAIR WALL RAIL WITH COVER PLATE (TYP)
AE444 AE444 SCALE: 1" = 1'-0"

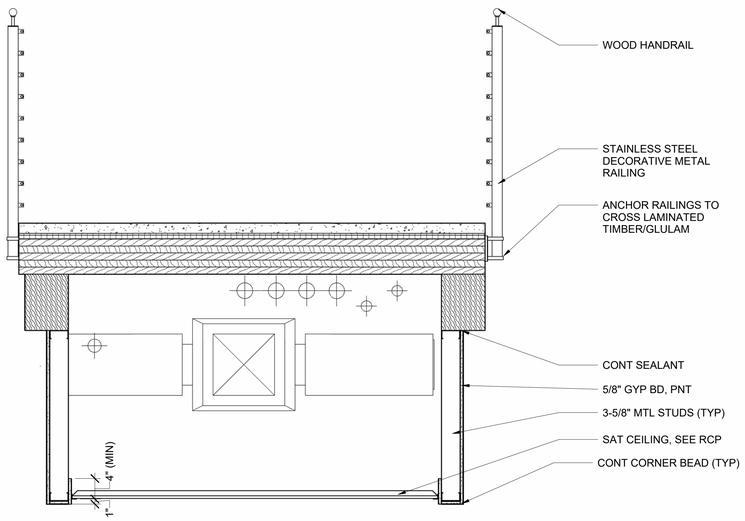

10 SECTION THROUGH RAIILING AT LOBBY 100
AE102 AE444 SCALE: 1" = 1'-0"

GRAPHIC SCALES

1"=1'-0" 1' 6" 0 1' 2'

1-1/2"=1'-0" 1' 8" 4" 0 1'

CHECK GRAPHIC SCALE BEFORE USING

NO.	DATE	DESCRIPTION	BY
1	02/13/2025	ADDENDUM NO.1	HMG

REVISIONS

LICENSED ARCHITECT TYLER E. BOLSER 1-29-2025 STATE OF MAINE

DRAWN BY: MJD
CHECK BY: CET
NO.
DATE 01/29/2025

DEPARTMENT OF INLAND FISHERIES & WILDLIFE

TITLE NEW OFFICE HEADQUARTERS
LOCATION AUGUSTA, ME
TITLE THIS DWG. STAIR AND RAILING DETAILS

OAK POINT ASSOCIATES
231 Main Street, Biddeford, Maine 04005 207.283.0193

DRAWING NO. AE444
SHEET NO. 129 OF 239

2/13/2025 12:37:19 PM
C:\Users\Heidi\Documents\22205.04-IF&W-ARCH_v22_hgardnerYBPQX.rvt

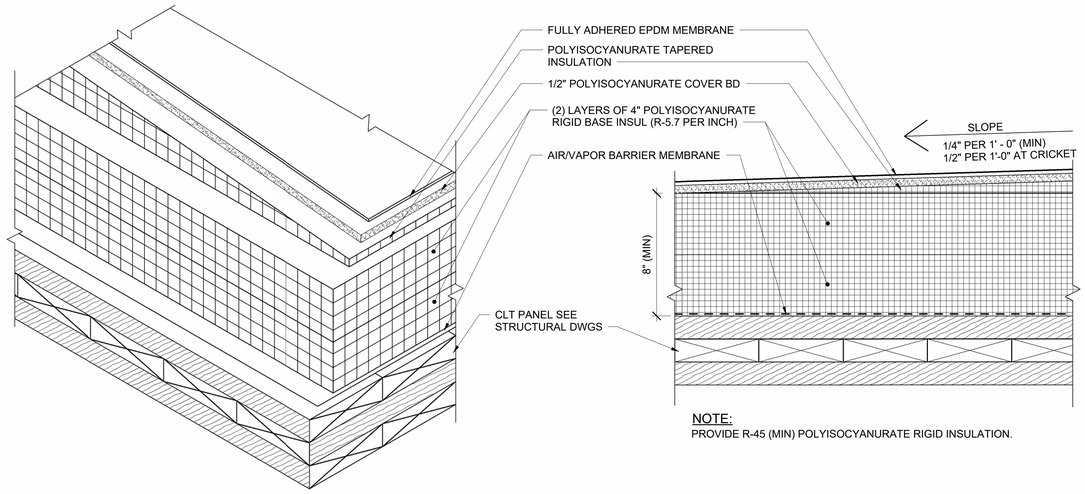

NOTE:
PROVIDE R-45 (MIN) POLYISOCYANURATE RIGID INSULATION.

1 EPDM ROOF SYSTEM DETAIL(TYP)
AE120 AE501 SCALE: 3" = 1'-0"

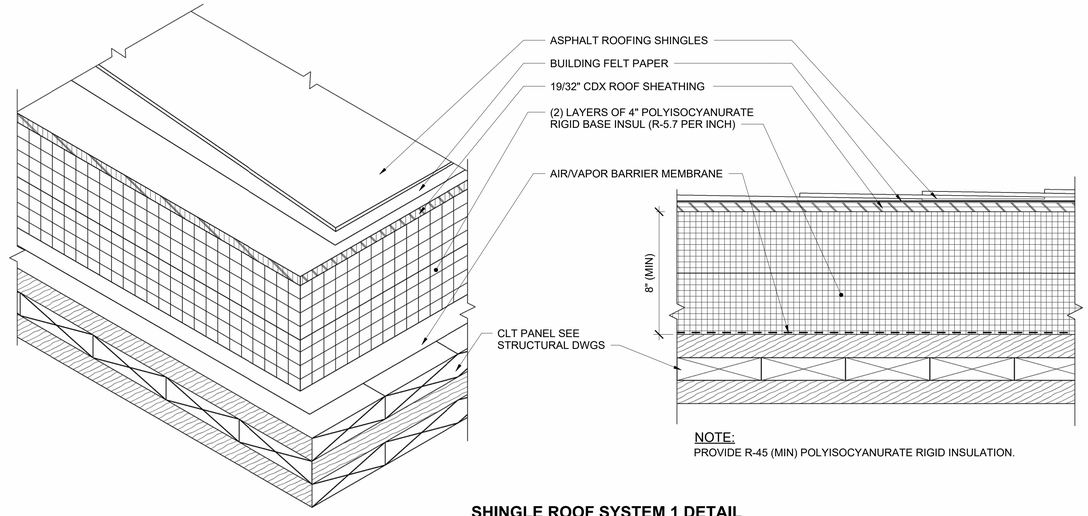

NOTE:
PROVIDE R-45 (MIN) POLYISOCYANURATE RIGID INSULATION.

2 SHINGLE ROOF SYSTEM 1 DETAIL (TYP)
AE120 AE501 SCALE: 3" = 1'-0"

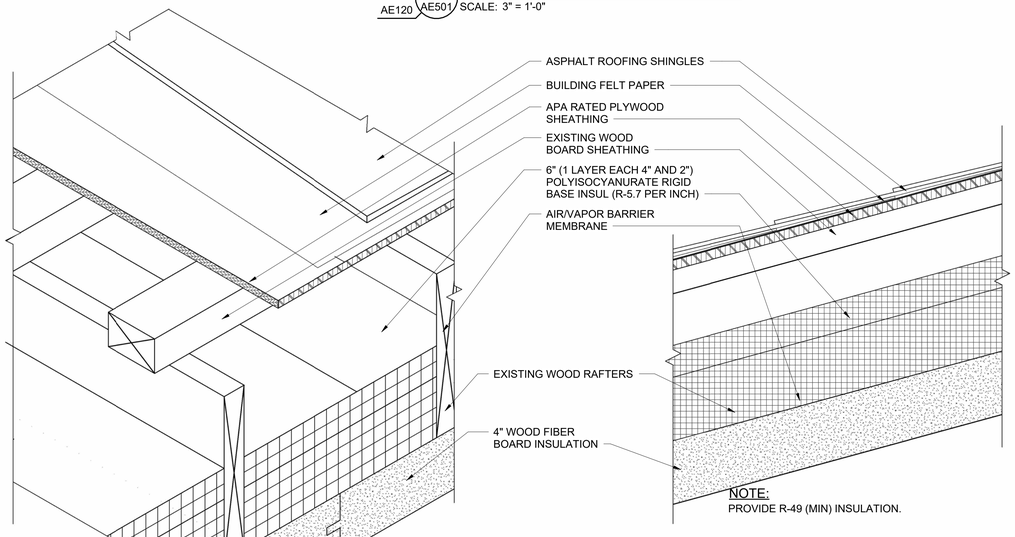

NOTE:
PROVIDE R-49 (MIN) INSULATION.

3 SHINGLE ROOF SYSTEM 2 DETAIL (TYP)
AE120 AE501 SCALE: 3" = 1'-0"

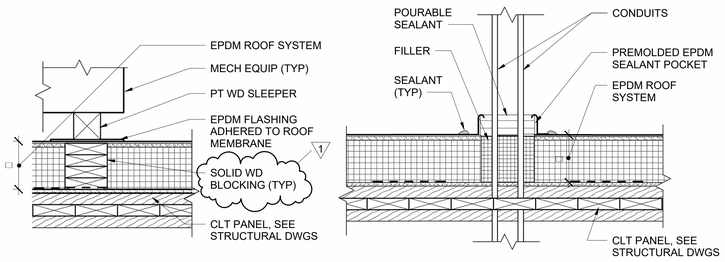

4 ROOF SLEEPER DETAIL (TYP)
AE120 AE501 SCALE: 1 1/2" = 1'-0"

5 PITCH POCKET DETAIL (TYP)
AE501 SCALE: 1 1/2" = 1'-0"

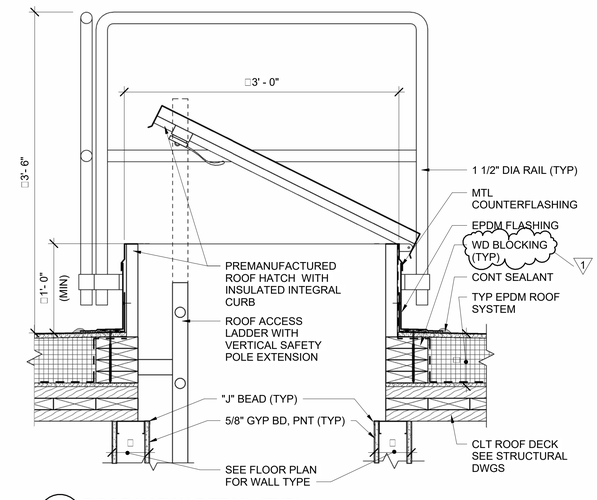

6 ROOF HATCH DETAIL (TYP)
AE120 AE501 SCALE: 1 1/2" = 1'-0"

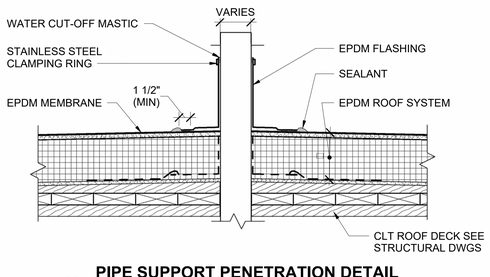

7 PIPE SUPPORT PENETRATION DETAIL (TYP)
AE501 SCALE: 1 1/2" = 1'-0"

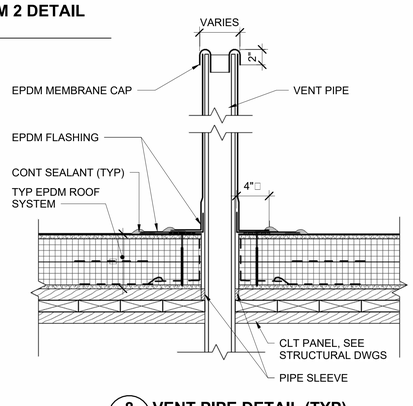

8 VENT PIPE DETAIL (TYP)
AE501 SCALE: 1 1/2" = 1'-0"

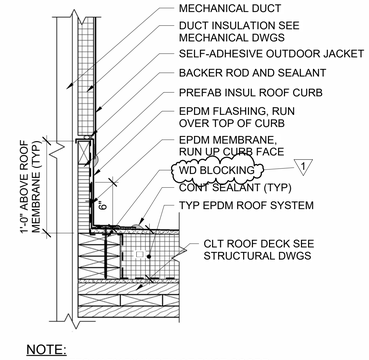

NOTE:
CURB SIZES VARY BY WIDTH OF DUCT-COORD WITH SIZES SHOWN ON MECHANICAL DRAWINGS

9 DUCT CURB DETAIL (TYP)
AE501 SCALE: 1 1/2" = 1'-0"

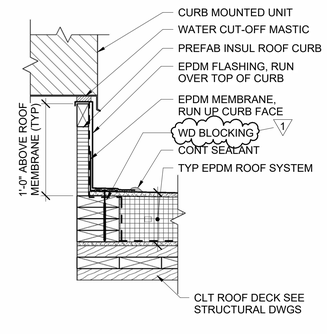

10 EQUIPMENT CURB DETAIL (TYP)
AE120 AE501 SCALE: 1 1/2" = 1'-0"

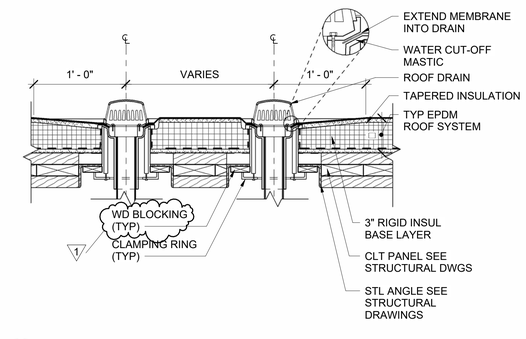

11 DUAL ROOF DRAIN DETAIL 2 (TYP)
AE120 AE501 SCALE: 1 1/2" = 1'-0"

GRAPHIC SCALES
3"=1'-0" 6" 4" 2" 0 6"
1-1/2"=1'-0" 1' 8" 4" 0 1'
CHECK GRAPHIC SCALE BEFORE USING

NO.	DATE	DESCRIPTION	BY
1	02/13/2025	ADDENDUM NO.1	HMG

REVISIONS

LICENSED ARCHITECT TYLER E. BARTER 1-24-2025 STATE OF MAINE

DRAWN BY: MJD
CHECK BY: CET
DATE 01/29/2025

DEPARTMENT OF INLAND FISHERIES & WILDLIFE
TITLE: NEW OFFICE HEADQUARTERS
LOCATION: AUGUSTA, ME
TITLE THIS DWG: ROOF DETAILS 1

OAK POINT ASSOCIATES
231 Main Street, Biddeford, Maine 04005 207.283.0193

DRAWING NO. AE501
SHEET NO. 130 OF 239

2/13/2025 12:37:33 PM
C:\Users\Heidi\Documents\22205.04-IF&W-ARCH_v22_hgardnerYBPQX.rvt

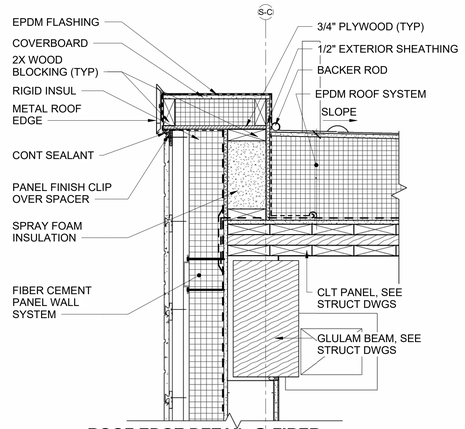

1 ROOF EDGE DETAIL @ FIBER CEMENT BOARD SIDING
AE104 AE502 SCALE: 1 1/2" = 1'-0"

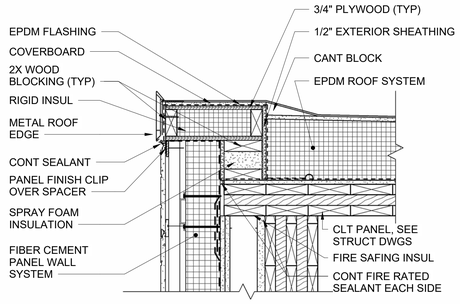

2 ROOF EDGE DETAIL @ FIBER CEMENT BOARD SIDING, 2 HR WALL
AE120 AE502 SCALE: 1 1/2" = 1'-0"

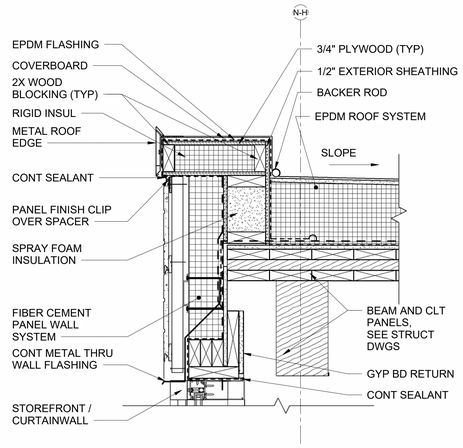

3 ROOF EDGE DETAIL @ CURTAINWALL
AE120 AE502 SCALE: 1 1/2" = 1'-0"

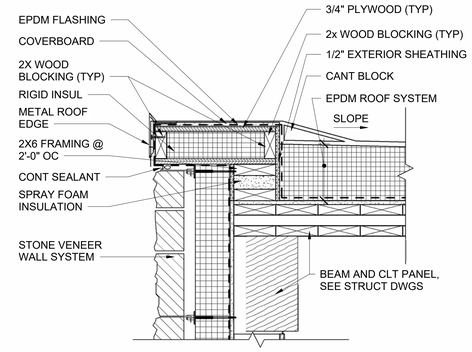

4 ROOF EDGE DETAIL @ STONE VENEER
AE120 AE502 SCALE: 1 1/2" = 1'-0"

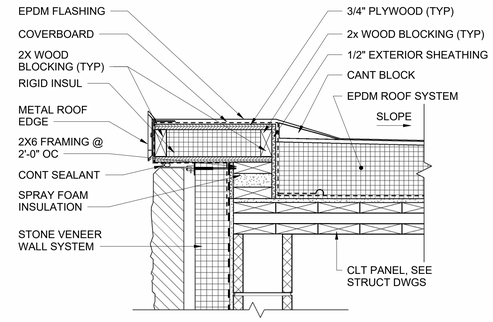

5 ROOF EDGE DETAIL @ STONE VENEER ON CMU WALL
AE120 AE502 SCALE: 1 1/2" = 1'-0"

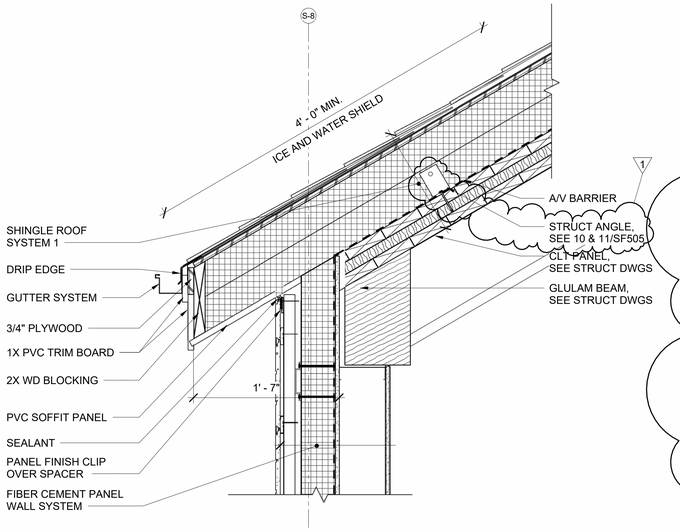

6 EAVE DETAIL @ FIBER CEMENT BOARD SIDING
AE120 AE502 SCALE: 1 1/2" = 1'-0"

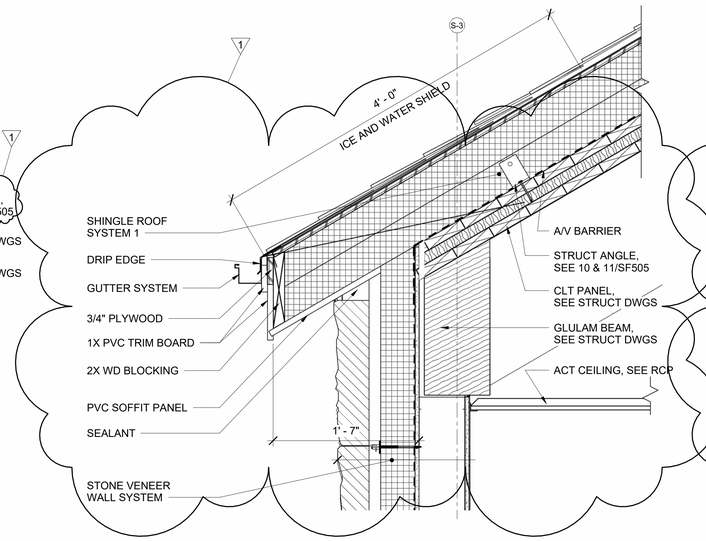

7 EAVE DETAIL @ STONE VENEER
AE120 AE502 SCALE: 1 1/2" = 1'-0"

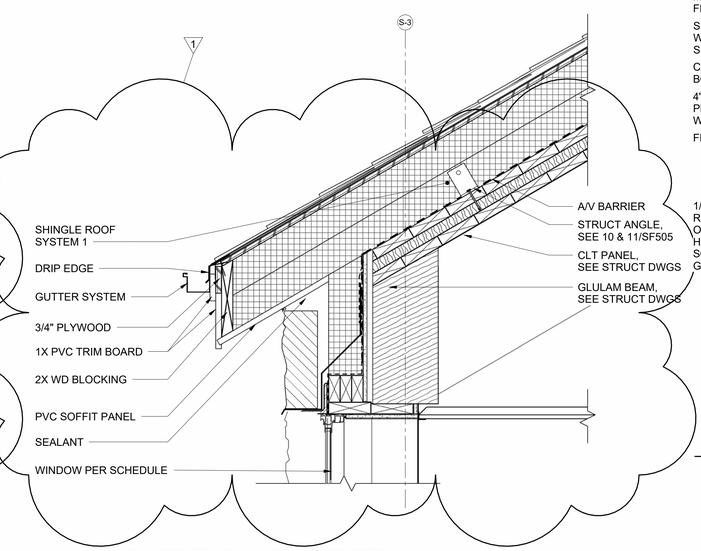

8 EAVE DETAIL @ STONE VENEER @ WINDOW
AE120 AE502 SCALE: 1 1/2" = 1'-0"

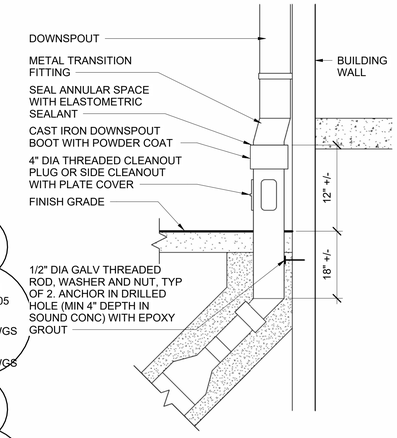

13 DOWNSPOUT BOOT
AE502 SCALE: 1 1/2" = 1'-0"

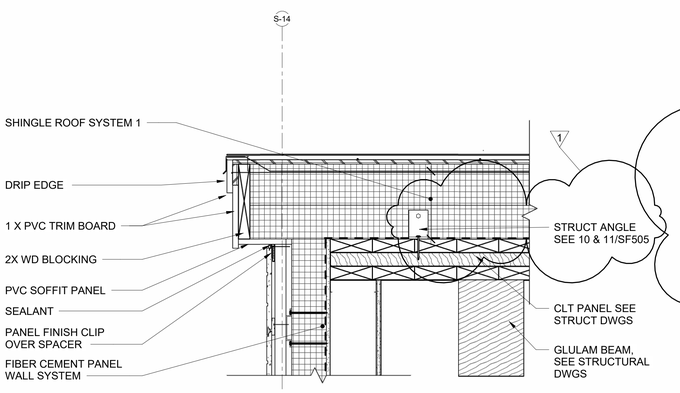

9 RAKE DETAIL @FIBER CEMENT BOARD SIDING
AE120 AE502 SCALE: 1 1/2" = 1'-0"

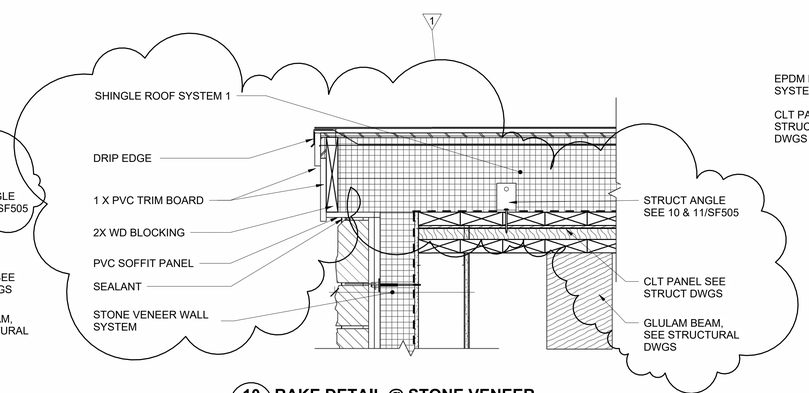

10 RAKE DETAIL @ STONE VENEER
AE120 AE502 SCALE: 1 1/2" = 1'-0"

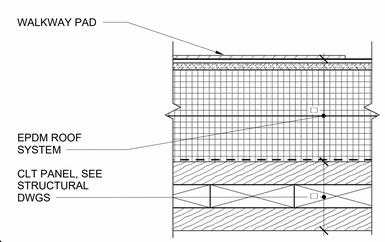

11 WALKWAY PAD DETAIL (TYP)
AE502 SCALE: 3" = 1'-0"

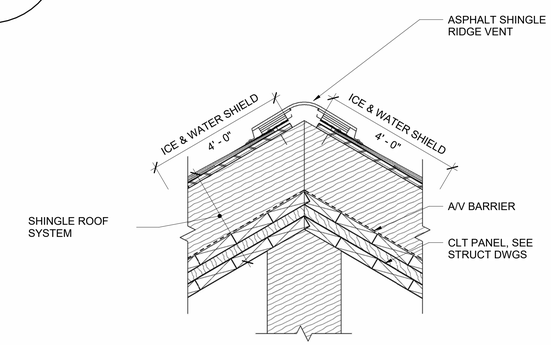

12 RIDGE VENT DETAIL
AE120 AE502 SCALE: 1 1/2" = 1'-0"

GRAPHIC SCALE
1-1/2"=1'-0" 1' 8" 4" 0 1'
CHECK GRAPHIC SCALE BEFORE USING

NO.	DATE	DESCRIPTION	BY
1	02/13/2025	ADDENDUM NO.1	HMG
		REVISIONS	

LICENSED ARCHITECT TYLER E. CET 4402 1-29-25 STATE OF MAINE

DRAWN BY: MJD
CHECK BY: CET
NO.
DATE 01/29/2025

DEPARTMENT OF INLAND FISHERIES & WILDLIFE
TITLE NEW OFFICE HEADQUARTERS
LOCATION AUGUSTA, ME
TITLE THIS DWG. ROOF DETAILS 2

OAK POINT ASSOCIATES
231 Main Street, Biddeford, Maine 04005 207.283.0193

DRAWING NO. AE502
SHEET NO. 131 OF 239

2/13/2025 12:37:55 PM
C:\Users\HeidiDocuments\22205.04-IF&W-ARCH_v22_hgardnerYBPQX.rvt

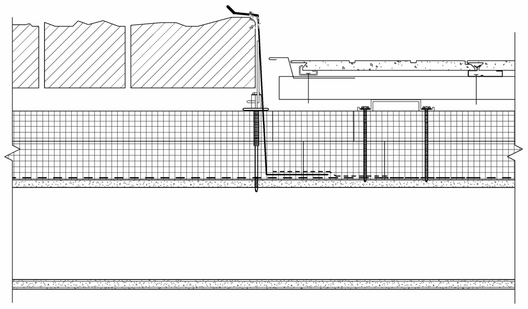

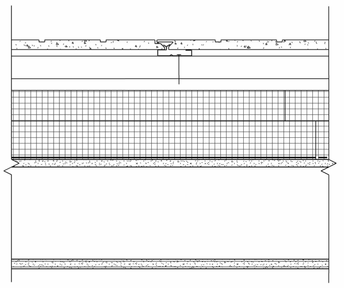

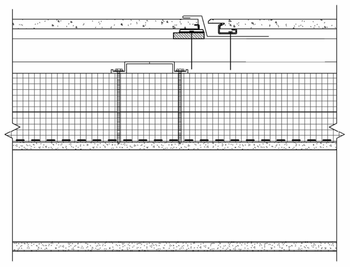

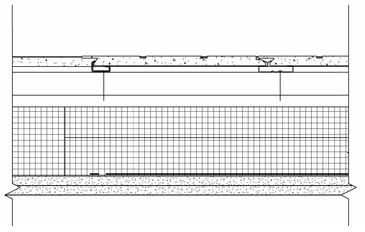

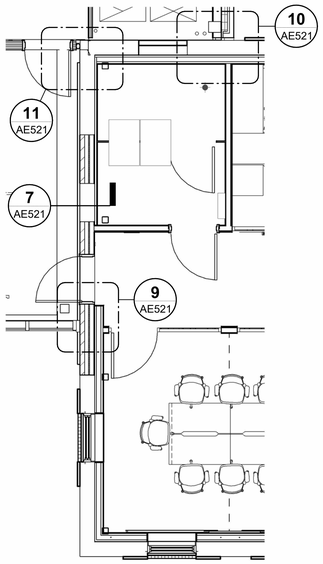

1 ENLARGED FIRST FLOOR PLAN @ EXPANSION JOINT, CETA NORTH
AE101 / AE521 SCALE: 1/4" = 1'-0"

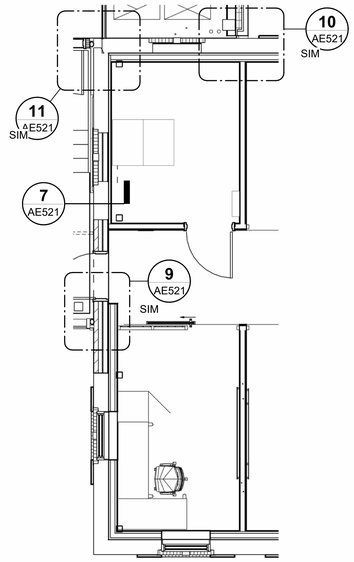

2 ENLARGED SECOND FLOOR PLAN @ EXPANSION JOINT, CETA NORTH
AE102 / AE521 SCALE: 1/4" = 1'-0"

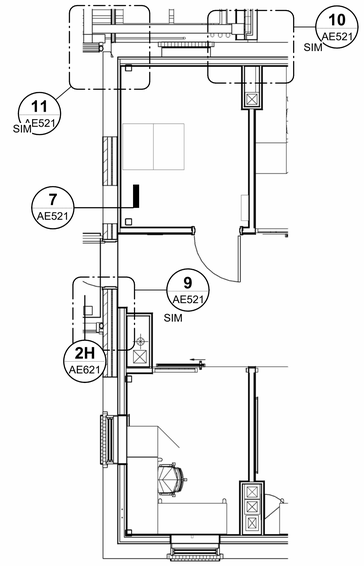

3 ENLARGED THIRD FLOOR PLAN @ EXPANSION JOINT, CETA NORTH
AE103 / AE521 SCALE: 1/4" = 1'-0"

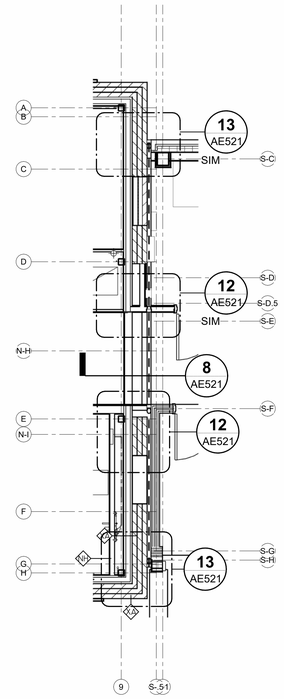

4 ENLARGED FIRST FLOOR PLAN @ EXPANSION JOINT, CETA SOUTH
AE101 / AE521 SCALE: 1/4" = 1'-0"

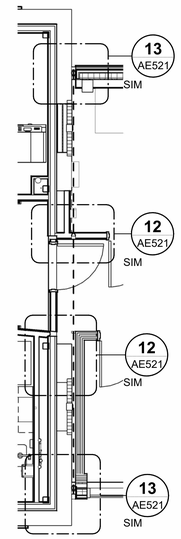

5 ENLARGED SECOND FLOOR PLAN @ EXPANSION JOINT, CETA SOUTH
AE102 / AE521 SCALE: 1/4" = 1'-0"

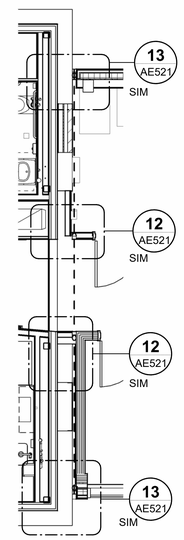

6 ENLARGED THIRD FLOOR PLAN @ EXPANSION JOINT, CETA SOUTH
AE103 / AE521 SCALE: 1/4" = 1'-0"

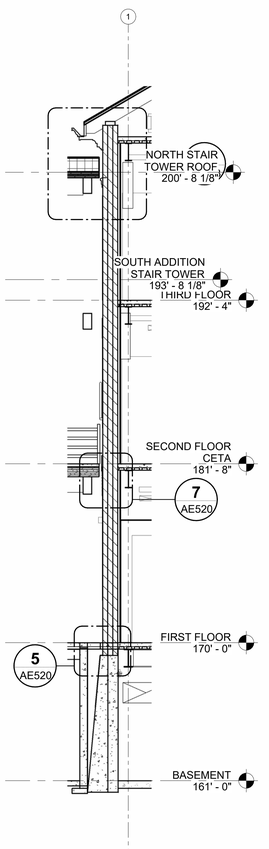

7 WALL SECTION
AE521 / AE521 SCALE: 1/4" = 1'-0"

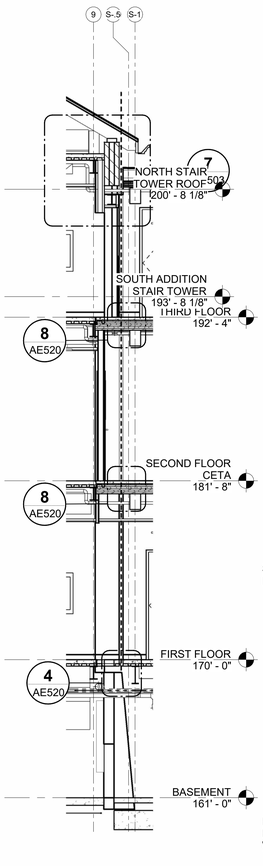

8 WALL SECTION
AE521 / AE521 SCALE: 1/4" = 1'-0"

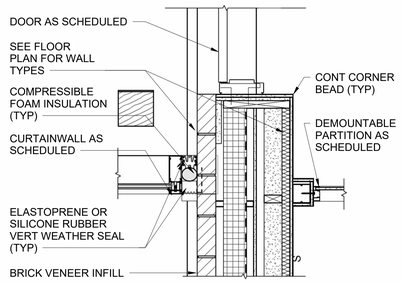

9 EXPANSION JOINT @ INTERIOR WALL
AE521 / AE521 SCALE: 1" = 1'-0"

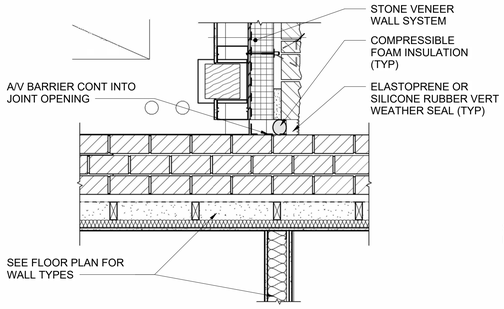

10 EXPANSION JOINT @ EXTERIOR WALL
AE521 / AE521 SCALE: 1" = 1'-0"

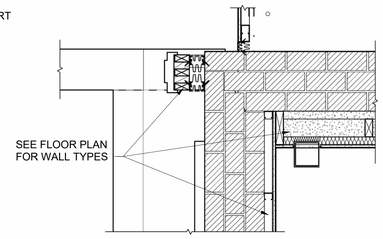

11 EXPANSION JOINT @ INTERIOR WALL
AE521 / AE521 SCALE: 1" = 1'-0"

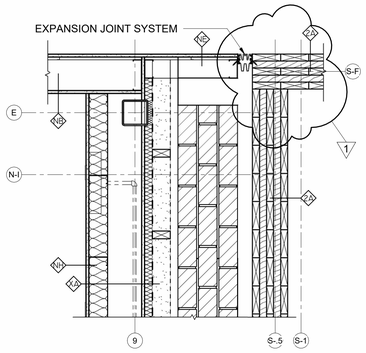

12 EXPANSION JOINT @ INTERIOR WALL
AE521 / AE521 SCALE: 1" = 1'-0"

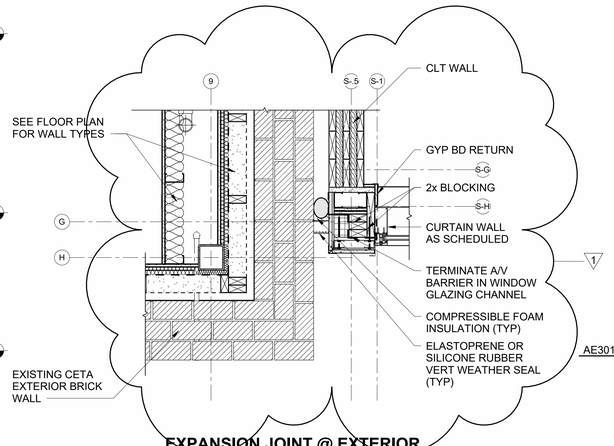

13 EXPANSION JOINT @ EXTERIOR WALL
AE521 / AE521 SCALE: 1" = 1'-0"

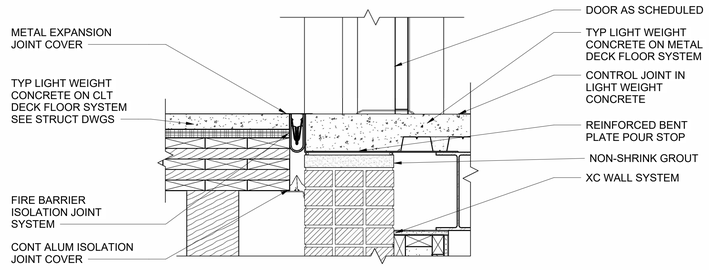

14 SECTION DETAIL AT EXP JOINT
AE301 / AE521 SCALE: 1 1/2" = 1'-0"

GRAPHIC SCALES

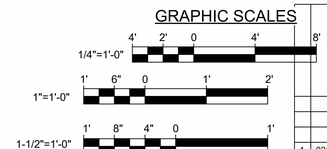

CHECK GRAPHIC SCALES BEFORE USING

NO.	DATE	REVISIONS	BY
1	02/13/2025	ADDENDUM NO.1	HMG

LICENSED ARCHITECT TYLER E. BAUER No. 4362 STATE OF MAINE 1-29-25

DRAWN BY: MJD
CHECK BY: CET
DATE 01/29/2025

DEPARTMENT OF INLAND FISHERIES & WILDLIFE

TITLE: NEW OFFICE HEADQUARTERS
LOCATION: AUGUSTA, ME
TITLE THIS DWG: EXPANSION JOINT ENLARGED PLANS AND DETAILS

OAK POINT ASSOCIATES
231 Main Street, Biddeford, Maine 04005 207.283.0193

DRAWING NO. AE521
SHEET NO. 139 OF 239

2/13/2025 4:16:14 PM
C:\Users\Heidi\Documents\22205.04-IF&W-ARCH_v22_hgardnerYBPQX.rvt

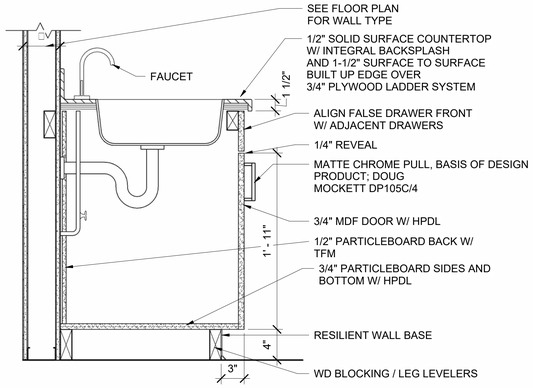

1 CASEWORK (TYP) SINK BASE SECTION
AE401 AE581 SCALE: 1 1/2" = 1'-0"

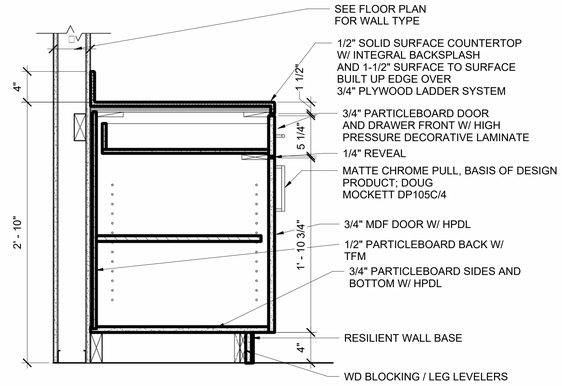

2 CASEWORK (TYP) BASE SECTION
AE401 AE581 SCALE: 1 1/2" = 1'-0"

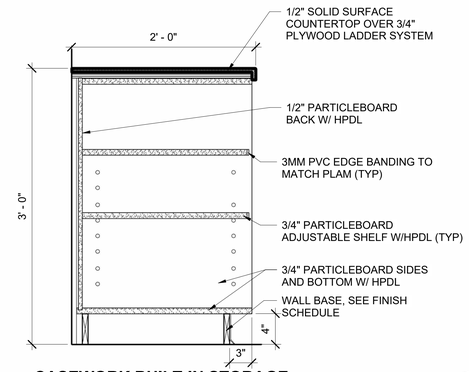

5 CASEWORK BUILT-IN STORAGE SECTION
AE740 AE581 SCALE: 1 1/2" = 1'-0"

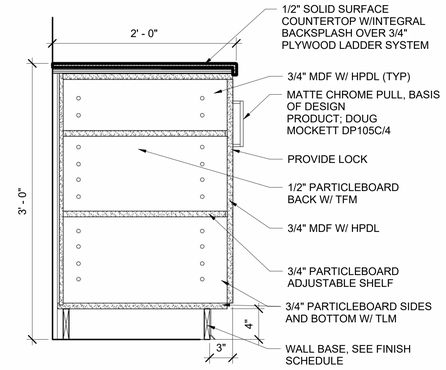

6 CASEWORK BUILT-IN SHELVES W/ DOORS
AE740 AE581 SCALE: 1 1/2" = 1'-0"

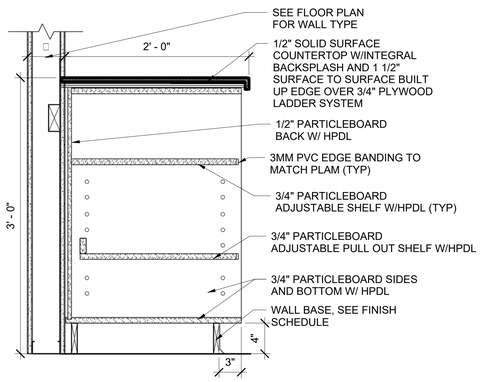

7 CASEWORK BUILT-IN STORAGE W/PRINTER SHELF SECTION
AE740 AE581 SCALE: 1 1/2" = 1'-0"

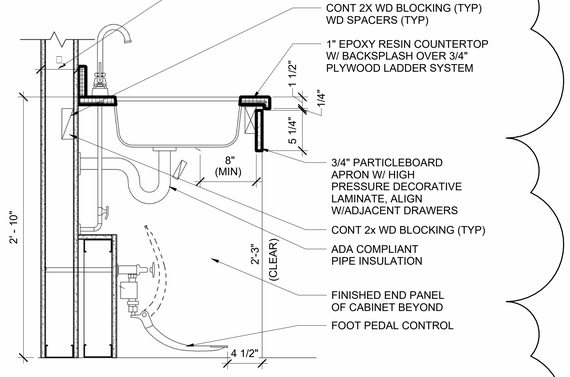

8 CASEWORK (TYP) AT SINK BASE WITH FOOT CONTROLS
AE740 AE581 SCALE: 1 1/2" = 1'-0"

1

GRAPHIC SCALE
1-1/2"=1'-0" 1' 8" 4" 0 1'
CHECK GRAPHIC SCALE BEFORE USING

NO.	DATE	DESCRIPTION	BY
1	02/13/2025	ADDENDUM NO.1	HMG

REVISIONS

LICENSED ARCHITECT TYLER G. BAUER 1-29-25 STATE OF MAINE

DRAWN BY: CET
CHECK BY: TGB
NO.
DATE 01/29/2025

DEPARTMENT OF INLAND FISHERIES & WILDLIFE
TITLE: NEW OFFICE HEADQUARTERS
LOCATION: AUGUSTA, ME
TITLE THIS DWG.: CASEWORK DETAILS 2

OAK POINT ASSOCIATES
231 Main Street, Biddeford, Maine 04005 207.283.0193

DRAWING NO. AE581
SHEET NO. 142 OF 239

2/13/2025 12:38:57 PM
C:\Users\Heidi\Documents\22205.04-IF&W-ARCH_v22_hgardnerYBPQX.rvt

DOOR SCHEDULE - NORTH ADDITION

NO.	DOOR						HARDWARE TYPE	FRAME			DETAILS			FIRE RATING	NOTES	DOOR SHADES
	WIDTH	HEIGHT	THICKNESS	TYPE	MAT	FINISH		TYPE	MAT	FINISH	HEAD	JAMB	SILL			
160	3' - 0"	7' - 0"	1 3/4"	A	HM	PNT	HW-3	2	HM	PNT	1/AE602	6/AE602	11/AE602			
161	3' - 0"	7' - 0"	1 3/4"	B	HM	PNT	HW-7	2	HM	PNT	1/AE602	6/AE602	11/AE602			
162	3' - 0"	7' - 0"	1 3/4"	A	HM	PNT	HW-3	2	HM	PNT	1/AE602	6/AE602	11/AE602			
163	3' - 0"	7' - 0"	1 3/4"	A	HM	PNT	HW-2	2	HM	PNT	1/AE602	6/AE602	11/AE602			
164	3' - 0"	7' - 0"	1 3/4"	B	HM	PNT	HW-7	2	HM	PNT	1/AE602	6/AE602	11/AE602			
166	3' - 0"	7' - 0"	1 3/4"	A	HM	PNT	HW-3	2	HM	PNT	1/AE602	6/AE602	11/AE602			
167A	3' - 0"	7' - 0"	1 3/4"	B	HM	PNT	HW-5B	2	HM	PNT	1/AE602	6/AE602	11/AE602			
167B	3' - 0"	7' - 0"	1 3/4"	B	HM	PNT	HW-7	2	HM	PNT	1/AE602	6/AE602	11/AE602			
168	3' - 0"	7' - 0"	1 3/4"	A	HM	PNT	HW-5A	2	HM	PNT	1/AE602	6/AE602	11/AE602			
169	3' - 0"	7' - 0"	1 3/4"	A	HM	PNT	HW-5A	2	HM	PNT	1/AE602	6/AE602	11/AE602			
170	3' - 0"	7' - 0"	1 3/4"	B	HM	PNT	HW-5A	2	HM	PNT	1/AE602	6/AE602	11/AE602			
171	3' - 0"	7' - 0"	1 3/4"	A	HM	PNT	HW-5A	2	HM	PNT	1/AE602	6/AE602	11/AE602			
272	3' - 0"	7' - 0"	1 3/4"	A	HM	PNT	HW-2	2	HM	PNT	1/AE602	6/AE602	11/AE602			
273	6' - 0"	7' - 0"	1 3/4"	A	HM	PNT	HW-3A	4	HM	PNT	1/AE602	6/AE602	11/AE602			
274	3' - 0"	7' - 0"	1 3/4"	A	HM	PNT	HW-2	2	HM	PNT	1/AE602	6/AE602	11/AE602			
275	3' - 0"	7' - 0"	1 3/4"	A	HM	PNT	HW-3	2	HM	PNT	1/AE602	6/AE602	11/AE602			
276	3' - 0"	7' - 0"	1 3/4"	A	HM	PNT	HW-2	2	HM	PNT	1/AE602	6/AE602	11/AE602			
277	6' - 0"	7' - 0"	1 3/4"	A	HM	PNT	HW-3A	4	HM	PNT	1/AE602	6/AE602	11/AE602			
278	3' - 0"	7' - 0"	1 3/4"	A	HM	PNT	HW-2	2	HM	PNT	1/AE602	6/AE602	11/AE602			
279	5' - 6"	7' - 0"	1 3/4"	C/C1	HM	PNT	HW-3A	4A	HM	PNT	1/AE602	6/AE602	11/AE602			
280	3' - 0"	7' - 0"	1 3/4"	A	HM	PNT	HW-2	2	HM	PNT	1/AE602	6/AE602	11/AE602			
281	3' - 0"	7' - 0"	1 3/4"	A	HM	PNT	HW-3	2	HM	PNT	2/AE602	7/AE602	11/AE602	60 MIN		
E2A	3' - 0"	7' - 0"	1 3/4"	A	HM	PNT	HW-3	2	HM	PNT	1/AE602	6/AE602	11/AE602	60 MIN		

DOOR SCHEDULE - CETA

NO.	DOOR						HARDWARE TYPE	FRAME			DETAILS			FIRE RATING	NOTES	DOOR SHADES
	WIDTH	HEIGHT	THICKNESS	TYPE	MAT	FINISH		TYPE	MAT	FINISH	HEAD	JAMB	SILL			
002	3' - 0"	7' - 0"	1 3/4"	A	HM	PNT	HW-3	2	HM	PNT	1/AE602	6/AE602	11/AE602	60 MIN		
003	3' - 0"	7' - 0"	1 3/4"	A	HM	PNT	HW-3	2	HM	PNT	1/AE602	6/AE602	11/AE602	60 MIN		
133	3' - 2"	7' - 2"	1 3/4"	G1	ALUM	HPC	HW-6	7	ALUM	HPC					DEMOUNTABLE PARTITION (NB)	
136	3' - 2"	7' - 2"	1 3/4"	G1	ALUM	HPC	HW-4	9	ALUM	HPC	1C/AE630	1D/AE630	1C/AE630		DEMOUNTABLE PARTITION SLIDING DOOR	
138	3' - 2"	7' - 2"	1 3/4"	G1	ALUM	HPC	HW-4	9	ALUM	HPC	1C/AE630	1D/AE630	1C/AE630		DEMOUNTABLE PARTITION SLIDING DOOR	
139	3' - 2"	7' - 2"	1 3/4"	G1	ALUM	HPC	HW-4	9	ALUM	HPC	1C/AE630	1D/AE630	1C/AE630		DEMOUNTABLE PARTITION SLIDING DOOR	
140	3' - 2"	7' - 2"	1 3/4"	G1	ALUM	HPC	HW-4	9	ALUM	HPC	1C/AE630	1D/AE630	1C/AE630		DEMOUNTABLE PARTITION SLIDING DOOR	
141	3' - 2"	7' - 2"	1 3/4"	G1	ALUM	HPC	HW-4	9	ALUM	HPC	1C/AE630	1D/AE630	1C/AE630		DEMOUNTABLE PARTITION SLIDING DOOR	
142	3' - 2"	7' - 2"	1 3/4"	G1	ALUM	HPC	HW-4	9	ALUM	HPC	1C/AE630	1D/AE630	1C/AE630		DEMOUNTABLE PARTITION SLIDING DOOR	
143	3' - 2"	7' - 2"	1 3/4"	G1	ALUM	HPC	HW-4	9	ALUM	HPC	1C/AE630	1D/AE630	1C/AE630		DEMOUNTABLE PARTITION SLIDING DOOR	
144	3' - 2"	7' - 2"	1 3/4"	G1	ALUM	HPC	HW-4	9	ALUM	HPC	1C/AE630	1D/AE630	1C/AE630		DEMOUNTABLE PARTITION SLIDING DOOR	
145	3' - 2"	7' - 2"	1 3/4"	G1	ALUM	HPC	HW-4	9	ALUM	HPC	1C/AE630	1D/AE630	1C/AE630		DEMOUNTABLE PARTITION SLIDING DOOR	
146	3' - 2"	7' - 2"	1 3/4"	G1	ALUM	HPC	HW-4	9	ALUM	HPC	1C/AE630	1D/AE630	1C/AE630		DEMOUNTABLE PARTITION SLIDING DOOR	
147	3' - 2"	7' - 2"	1 3/4"	G1	ALUM	HPC	HW-4	9	ALUM	HPC	1C/AE630	1D/AE630	1C/AE630		DEMOUNTABLE PARTITION SLIDING DOOR	
148	3' - 2"	7' - 2"	1 3/4"	G1	ALUM	HPC	HW-4	9	ALUM	HPC	1C/AE630	1D/AE630	1C/AE630		DEMOUNTABLE PARTITION SLIDING DOOR	
149	3' - 2"	7' - 2"	1 3/4"	G1	ALUM	HPC	HW-4	9	ALUM	HPC	1C/AE630	1D/AE630	1C/AE630		DEMOUNTABLE PARTITION SLIDING DOOR	
150	3' - 2"	7' - 2"	1 3/4"	G1	ALUM	HPC	HW-4	9	ALUM	HPC	1C/AE630	1D/AE630	1C/AE630		DEMOUNTABLE PARTITION SLIDING DOOR	
151	3' - 2"	7' - 2"	1 3/4"	G1	ALUM	HPC	HW-4	9	ALUM	HPC	1C/AE630	1D/AE630	1C/AE630		DEMOUNTABLE PARTITION SLIDING DOOR	
152	3' - 0 1/4"	7' - 0 3/8"	1 3/4"	G	ALUM	HPC	HW-6	12	ALUM	HPC	1F/AE630	1G/AE630	1F/AE630		DEMOUNTABLE PARTITION SWINGING DOOR	
153	3' - 2"	7' - 2"	1 3/4"	G1	ALUM	HPC	HW-4	9	ALUM	HPC	1C/AE630	1D/AE630	1C/AE630		DEMOUNTABLE PARTITION SLIDING DOOR	
154	3' - 2"	7' - 2"	1 3/4"	G1	ALUM	HPC	HW-4	9	ALUM	HPC	1C/AE630	1D/AE630	1C/AE630		DEMOUNTABLE PARTITION SLIDING DOOR	
155	3' - 0"	6' - 11 1/2"	1 3/4"	G	ALUM	HPC	HW-5	8	ALUM	HPC	1F/AE630	1G/AE630	1F/AE630		DEMOUNTABLE PARTITION SWINGING DOOR	
156	3' - 2"	7' - 2"	1 3/4"	G1	ALUM	HPC	HW-4	9	ALUM	HPC	1C/AE630	1D/AE630	1C/AE630		DEMOUNTABLE PARTITION SLIDING DOOR	
157	3' - 0"	6' - 11 1/2"	1 3/4"	G	ALUM	HPC	HW-5	8	ALUM	HPC	1F/AE630	1G/AE630	1F/AE630		DEMOUNTABLE PARTITION SWINGING DOOR	
158	3' - 0"	7' - 0"	1 3/4"	A	HM	PNT	HW-3	2	HM	PNT	1/AE602	6/AE602	11/AE602			
200	3' - 0"	7' - 0"	1 3/4"	B	HM	PNT	HW-7	2	HM	PNT	1/AE602	6/AE602	11/AE602	60 MIN		
239	3' - 2"	7' - 2"	1 3/4"	G1	ALUM	HPC	HW-6	9	ALUM	HPC	1C/AE630	1D/AE630	1C/AE630		DEMOUNTABLE PARTITION (NB)	
240	3' - 2"	7' - 2"	1 3/4"	G1	ALUM	HPC	HW-6	9	ALUM	HPC	1C/AE630	1D/AE630	1C/AE630		DEMOUNTABLE PARTITION (NB)	
241	3' - 2"	7' - 2"	1 3/4"	G1	ALUM	HPC	HW-4	9	ALUM	HPC	1C/AE630	1D/AE630	1C/AE630		DEMOUNTABLE PARTITION SLIDING DOOR	
242	3' - 2"	7' - 2"	1 3/4"	G1	ALUM	HPC	HW-4	9	ALUM	HPC	1C/AE630	1D/AE630	1C/AE630		DEMOUNTABLE PARTITION SLIDING DOOR	
243	3' - 2"	7' - 2"	1 3/4"	G1	ALUM	HPC	HW-6	9	ALUM	HPC	1C/AE630	1D/AE630	1C/AE630		DEMOUNTABLE PARTITION SLIDING DOOR	
244	3' - 2"	7' - 2"	1 3/4"	G1	ALUM	HPC	HW-4	9	ALUM	HPC	1C/AE630	1D/AE630	1C/AE630		DEMOUNTABLE PARTITION SLIDING DOOR	
246	3' - 2"	7' - 2"	1 3/4"	G1	ALUM	HPC	HW-4	9	ALUM	HPC	1C/AE630	1D/AE630	1C/AE630		DEMOUNTABLE PARTITION SLIDING DOOR	
248	3' - 2"	7' - 2"	1 3/4"	G1	ALUM	HPC	HW-4	9	ALUM	HPC	1C/AE630	1D/AE630	1C/AE630		DEMOUNTABLE PARTITION SLIDING DOOR	
249	3' - 2"	7' - 2"	1 3/4"	G1	ALUM	HPC	HW-4	9	ALUM	HPC	1C/AE630	1D/AE630	1C/AE630		DEMOUNTABLE PARTITION SLIDING DOOR	
250	3' - 2"	7' - 2"	1 3/4"	G1	ALUM	HPC	HW-4	9	ALUM	HPC	1C/AE630	1D/AE630	1C/AE630		DEMOUNTABLE PARTITION SLIDING DOOR	
251	3' - 2"	7' - 2"	1 3/4"	G1	ALUM	HPC	HW-4	9	ALUM	HPC	1C/AE630	1D/AE630	1C/AE630		DEMOUNTABLE PARTITION SLIDING DOOR	
252	3' - 2"	7' - 2"	1 3/4"	G1	ALUM	HPC	HW-4	9	ALUM	HPC	1C/AE630	1D/AE630	1C/AE630		DEMOUNTABLE PARTITION SLIDING DOOR	
253	3' - 2"	7' - 2"	1 3/4"	G1	ALUM	HPC	HW-4	9	ALUM	HPC	1C/AE630	1D/AE630	1C/AE630		DEMOUNTABLE PARTITION SLIDING DOOR	
254	3' - 2"	7' - 2"	1 3/4"	G1	ALUM	HPC	HW-4	9	ALUM	HPC	1C/AE630	1D/AE630	1C/AE630		DEMOUNTABLE PARTITION SLIDING DOOR	
255	3' - 2"	7' - 2"	1 3/4"	G1	ALUM	HPC	HW-4	9	ALUM	HPC	1C/AE630	1D/AE630	1C/AE630		DEMOUNTABLE PARTITION SLIDING DOOR	
256	3' - 2"	7' - 2"	1 3/4"	G1	ALUM	HPC	HW-4	9	ALUM	HPC	1C/AE630	1D/AE630	1C/AE630		DEMOUNTABLE PARTITION SLIDING DOOR	
257	3' - 2"	7' - 2"	1 3/4"	G1	ALUM	HPC	HW-4	9	ALUM	HPC	1C/AE630	1D/AE630	1C/AE630		DEMOUNTABLE PARTITION SLIDING DOOR	
258	3' - 2"	7' - 2"	1 3/4"	G1	ALUM	HPC	HW-4	9	ALUM	HPC	1C/AE630	1D/AE630	1C/AE630		DEMOUNTABLE PARTITION SLIDING DOOR	
259	3' - 2"	7' - 2"	1 3/4"	G1	ALUM	HPC	HW-4	9	ALUM	HPC	1C/AE630	1D/AE630	1C/AE630		DEMOUNTABLE PARTITION SLIDING DOOR	
260	3' - 2"	7' - 2"	1 3/4"	G1	ALUM	HPC	HW-4	9	ALUM	HPC	1C/AE630	1D/AE630	1C/AE630		DEMOUNTABLE PARTITION SLIDING DOOR	
262	3' - 2"	7' - 2"	1 3/4"	G1	ALUM	HPC	HW-4	9	ALUM	HPC	1C/AE630	1D/AE630	1C/AE630		DEMOUNTABLE PARTITION SLIDING DOOR	
263	3' - 2"	7' - 2"	1 3/4"	G1	ALUM	HPC	HW-4	9	ALUM	HPC	1C/AE630	1D/AE630	1C/AE630		DEMOUNTABLE PARTITION SLIDING DOOR	
264	3' - 2"	7' - 2"	1 3/4"	G1	ALUM	HPC	HW-4	9	ALUM	HPC	1C/AE630	1D/AE630	1C/AE630		DEMOUNTABLE PARTITION SLIDING DOOR	
265	3' - 2"	7' - 2"	1 3/4"	G1	ALUM	HPC	HW-4	9	ALUM	HPC	1C/AE630	1D/AE630	1C/AE630		DEMOUNTABLE PARTITION SLIDING DOOR	
266	3' - 2"	7' - 2"	1 3/4"	G1	ALUM	HPC	HW-4	9	ALUM	HPC	1C/AE630	1D/AE630	1C/AE630		DEMOUNTABLE PARTITION SLIDING DOOR	
267	3' - 2"	7' - 2"	1 3/4"	G1	ALUM	HPC	HW-4	9	ALUM	HPC	1C/AE630	1D/AE630	1C/AE630		DEMOUNTABLE PARTITION SLIDING DOOR	
268	3' - 2"	7' - 2"	1 3/4"	G1	ALUM	HPC	HW-4	9	ALUM	HPC	1C/AE630	1D/AE630	1C/AE630		DEMOUNTABLE PARTITION SLIDING DOOR	
269	3' - 2"	7' - 2"	1 3/4"	G1	ALUM	HPC	HW-4	9	ALUM	HPC	1C/AE630	1D/AE630	1C/AE630		DEMOUNTABLE PARTITION SLIDING DOOR	
270	3' - 0"	7' - 0"	1 3/4"	A	HM	PNT	HW-3	2	HM	PNT	1/AE602	6/AE602	11/AE602			
304	3' - 0"	7' - 0"	1 3/4"	A	HM	PNT	HW-2	2	HM	PNT	1/AE602	6/AE602	11/AE602			
305	3' - 2"	7' - 2"	1 3/4"	G1	ALUM	HPC	HW-6	7	ALUM	HPC					DEMOUNTABLE PARTITION SLIDING DOOR	
306	3' - 2"	7' - 2"	1 3/4"	G1	ALUM	HPC	HW-6	9	ALUM	HPC					DEMOUNTABLE PARTITION SLIDING DOOR	
306A	3' - 0"	7' - 0"	1 3/4"	A	HM	PNT	HW-3	2	HM	PNT	1/AE602	6/AE602	11/AE602	60 MIN		
307	3' - 2"	7' - 2"	1 3/4"	G1	ALUM	HPC	HW-6	7	ALUM	HPC					DEMOUNTABLE PARTITION SLIDING DOOR	
308	3' - 2"	7' - 2"	1 3/4"	G1	ALUM	HPC	HW-4	9	ALUM	HPC	1C/AE630	1D/AE630	1C/AE630		DEMOUNTABLE PARTITION SLIDING DOOR	
309	3' - 0 3/4"	7' - 0"	1 3/4"	G	ALUM	HPC	HW-6A	12	ALUM	HPC	1F/AE630	1G/AE630	1F/AE630		DEMOUNTABLE PARTITION SWINGING DOOR	
312	3' - 2"	7' - 2"	1 3/4"	G1	ALUM	HPC	HW-4	9	ALUM	HPC	1C/AE630	1D/AE630	1C/AE630		DEMOUNTABLE PARTITION SLIDING DOOR	
313	3' - 2"	7' - 2"	1 3/4"	G1	ALUM	HPC	HW-4	9	ALUM	HPC	1C/AE630	1D/AE630	1C/AE630		DEMOUNTABLE PARTITION SLIDING DOOR	
314	3' - 2"	7' - 2"	1 3/4"	G1	ALUM	HPC	HW-4	9	ALUM	HPC	1C/AE630	1D/AE630	1C/AE630		DEMOUNTABLE PARTITION SLIDING DOOR	
315	3' - 2"	7' - 2"	1 3/4"	G1	ALUM	HPC	HW-4	9	ALUM	HPC	1C/AE630	1D/AE630	1C/AE630		DEMOUNTABLE PARTITION SLIDING DOOR	
316	3' - 2"	7' - 2"	1 3/4"	G1	ALUM	HPC	HW-4	9	ALUM	HPC	1C/AE630	1D/AE630	1C/AE630		DEMOUNTABLE PARTITION SLIDING DOOR	
317	3' - 2"	7' - 2"	1 3/4"	G1	ALUM	HPC	HW-4	9	ALUM	HPC	1C/AE630	1D/AE630	1C/AE630		DEMOUNTABLE PARTITION SLIDING DOOR	
318	3' - 2"	7' - 2"	1 3/4"	G1	ALUM	HPC	HW-4	9	ALUM	HPC	1C/AE630	1D/AE630	1C/AE630		DEMOUNTABLE PARTITION SLIDING DOOR	
319	3' - 2"	7' - 2"	1 3/4"	G1	ALUM	HPC	HW-4	9	ALUM	HPC	1C/AE630	1D/AE630	1C/AE630		DEMOUNTABLE PARTITION SLIDING DOOR	
320	3' - 2"	7' - 2"	1 3/4"	G1	ALUM	HPC	HW-4	9	ALUM	HPC	1C/AE630	1D/AE630	1C/AE630		DEMOUNTABLE PARTITION SLIDING DOOR	
321	2' - 11 1/8"	6' - 11 1/2"	1 3/4"	G	ALUM	HPC	HW-5	8	ALUM	HPC	1F/AE630	1G/AE630	1F/AE630			
322	3' - 2"	7' - 2"	1 3/4"	G1	ALUM	HPC	HW-4	9	ALUM	HPC	1C/AE630	1D/AE630	1C/AE630		DEMOUNTABLE PARTITION SLIDING DOOR	
323	2' - 10 1/4"	6' - 11 1/2"	1 3/4"	G	ALUM	HPC	HW-5	8	ALUM	HPC	1F/AE630	1G/AE630	1F/AE630			
324	3' - 2"	7' - 2"	1 3/4"	G1	ALUM	HPC	HW-4	9	ALUM	HPC	1C/AE630	1D/AE630	1C/AE630		DEMOUNTABLE PARTITION SLIDING DOOR	
325	3' - 2"	7' - 2"	1 3/4"	G1	ALUM	HPC	HW-4	9	ALUM	HPC	1C/AE630	1D/AE630	1C/AE630		DEMOUNTABLE PARTITION SLIDING DOOR	
326	3' - 2"	7' - 2"	1 3/4"	G1	ALUM	HPC	HW-4	9	ALUM	HPC	1C/AE630	1D/AE630	1C/AE630		DEMOUNTABLE PARTITION SLIDING DOOR	
327	3' - 2"	7' - 2"	1 3/4"	G1	ALUM	HPC	HW-4	9	ALUM	HPC	1C/AE630	1D/AE630	1C/AE630		DEMOUNTABLE PARTITION SLIDING DOOR	
328	3' - 2"	7' - 2"	1 3/4"	G1	ALUM	HPC	HW-4	9	ALUM	HPC	1C/AE630	1D/AE630	1C/AE630		DEMOUNTABLE PARTITION SLIDING DOOR	
330	3' - 0"	7' - 0"	1 3/4"	A	HM	PNT	HW-3	2	HM	PNT	1/AE602	6/AE602	11/AE602			

DOOR SCHEDULE - SOUTH ADDITION

NO.	DOOR						HARDWARE TYPE	FRAME			DETAILS			FIRE RATING	NOTES	DOOR SHADES
	WIDTH	HEIGHT	THICKNESS	TYPE	MAT	FINISH		TYPE	MAT	FINISH	HEAD	JAMB	SILL			
004	3' - 0"	7' - 0"	1 3/4"	A	HM	PNT	HW-3	2	HM	PNT	1/AE602	6/AE602	11/AE602	60 MIN		
005	3' - 0"	7' - 0"	1 3/4"	A	HM	PNT		2	HM	PNT						
006	3' - 0"	7' - 0"	1 3/4"	A	HM	PNT		2	HM	PNT						
100A	6' - 0"	7' - 0"	1 3/4"	E	ALUM	HPC	EH-1	S1A	ALUM	HPC	3C/AE621	3D/AE621	3F/AE621			
100B	6' - 0"	7' - 0"	1 3/4"	E	ALUM	HPC	EH-2	S2A	ALUM	HPC	3C/AE621	3D/AE621	3F/AE621			
101	3' - 0"	7' - 0"	1 3/4"	A	HM	PNT	HW-2	2	HM	PNT	1/AE602	6/AE602	11/AE602			
102A	3' - 0"	7' - 0"	1 3/4"	B	HM	PNT	HW-5B	2	HM	PNT	1/AE602	6/AE602	11/AE602	60 MIN		
102B	3' - 0"	7' - 0"	1 3/4"	B	HM	PNT	HW-5B	2	HM	PNT	1/AE602	6/AE602	11/AE602			
102C	3' - 0"	7' - 0"	1 3/4"	B	HM	PNT	HW-5B	2	HM	PNT	1/AE602	6/AE602	11/AE602			
103	3' - 0"	7' - 0"	1 3/4"	A	HM	PNT	HW-2	2	HM	PNT	1/AE602	6/AE602	11/AE602			
104	6' - 0"	7' - 0"	1 3/4"	D	HM	PNT	HW-7A	2	HM	PNT	1/AE602	6/AE602	11/AE602			
105	6' - 0"	7' - 0"	1 3/4"	A	HM	PNT	HW-3A	4	HM	PNT	1/AE602	6/AE602	11/AE602			
106	3' - 0"	7' - 0"	1 3/4"	A	HM	PNT	HW-2	2	HM	PNT	1/AE602	6/AE602	11/AE602			
107	3' - 0"	7' - 0"	1 3/4"	A	HM	PNT	HW-2	2	HM	PNT	1/AE602	6/AE602	11/AE602			
108	3' - 0"	7' - 0"	1 3/4"	A	HM	PNT	HW-2	2	HM	PNT	1/AE602	6/AE602	11/AE602			
111	3' - 0"	7' - 0"	1 3/4"	B	HM	PNT	HW-5A	2	HM	PNT	1/AE602	6/AE602	11/AE602			
111A	3' - 0"	7' - 0"	1 3/4"	B	HM	PNT	HW-5A	2	HM	PNT	1/AE602	6/AE602	11/AE602			
111B	3' - 2"	7' - 2"	1 3/4"	G1	ALUM	HPC	HW-4	9	ALUM	HPC					DEMOUNTABLE PARTITION SLIDING DOOR	
112	3' - 0"	7' - 0"	1 3/4"	B	HM	PNT	HW-5A	2	HM	PNT	1/AE602	6/AE602	11/AE602	60 MIN		
113	3' - 0"	7' - 0"	1 3/4"	B	HM	PNT	HW-5A	2	HM	PNT	1/AE602	6/AE602	11/AE602			
114	3' - 2"	7' - 2"	1 3/4"	G1	ALUM	HPC	HW-4	9	ALUM	HPC	1C/AE630	1D/AE630	1C/AE630		DEMOUNTABLE PARTITION SLIDING DOOR	
115	3' - 2"	7' - 2"	1 3/4"	G1	ALUM	HPC	HW-4	9	ALUM	HPC	1C/AE630	1D/AE630	1C/AE630		DEMOUNTABLE PARTITION SLIDING DOOR	
116	3' - 2"	7' - 2"	1 3/4"	G1	ALUM	HPC	HW-4	9	ALUM	HPC	1C/AE630	1D/AE630	1C/AE630		DEMOUNTABLE PARTITION SLIDING DOOR	
117	3' - 2"	7' - 2"	1 3/4"	G1	ALUM	HPC	HW-4	9	ALUM	HPC	1C/AE630	1D/AE630	1C/AE630		DEMOUNTABLE PARTITION SLIDING DOOR	
119	3' - 2"	7' - 2"	1 3/4"	G1	ALUM	HPC	HW-4	7	ALUM	HPC					DEMOUNTABLE PARTITION (NB)	
120	3' - 0"	7' - 0"	1 3/4"	A	HM	PNT	HW-2	2	HM	PNT	1/AE602	6/AE602	11/AE602			
121	3' - 0"	7' - 0"	1 3/4"	A	HM	PNT	HW-2	2	HM	PNT	1/AE602	6/AE602	11/AE602			
123	3' - 2"	7' - 2"	1 3/4"	G1	ALUM	HPC	HW-4	10	ALUM	HPC	1C/AE630	1D/AE630	1C/AE630		DEMOUNTABLE PARTITION SLIDING DOOR	
124	3' - 2"	7' - 2"	1 3/4"	G1	ALUM	HPC	HW-4	9	ALUM	HPC	1C/AE630	1D/AE630	1C/AE630		DEMOUNTABLE PARTITION SLIDING DOOR	
125	3' - 2"	7' - 2"	1 3/4"	G1	ALUM	HPC	HW-4	9	ALUM	HPC	1C/AE630	1D/AE630	1C/AE630		DEMOUNTABLE PARTITION SLIDING DOOR	
126	3' - 2"	7' - 2"	1 3/4"	G1	ALUM	HPC	HW-4	9	ALUM	HPC	1C/AE630	1D/AE630	1C/AE630		DEMOUNTABLE PARTITION SLIDING DOOR	
128	3' - 0"	7' - 0"	1 3/4"	A	HM	PNT	HW-3	2	HM	PNT	1/AE602	6/AE602	11/AE602			
129	3' - 0"	7' - 0"	1 3/4"	A	HM	PNT	HW-3	2	HM	PNT	1/AE602	6/AE602	11/AE602			
130	6' - 0"	7' - 0"	1 3/4"	A	HM	PNT	HW-3A	4	HM	PNT	1/AE602	6/AE602	11/AE602			
131	3' - 0"	7' - 0"	1 3/4"	A	HM	PNT	HW-3	2	HM	PNT	1/AE602	6/AE602	11/AE602			
132	3' - 0"	7' - 0"	1 3/4"	A	HM	PNT	HW-3	2	HM	PNT	1/AE602	6/AE602	11/AE602			
137	3' - 0"	7' - 0"	1 3/4"	B	HM	PNT	HW-7	2	HM	PNT	1/AE602	6/AE602	11/AE602	60 MIN		
201A	6' - 0"	7' - 0"	1 3/4"	E	ALUM	HPC	EH-2	S3A	ALUM	HPC	3C/AE621	3D/AE621	3F/AE621			
202	3' - 0"	7' - 0"	1 3/4"	A	HM	PNT	HW-2	2	HM	PNT	1/AE602	6/AE602	11/AE602			
203	3' - 0"	7' - 0"	1 3/4"	A	HM	PNT	HW-2	2	HM	PNT	1/AE602	6/AE602	11/AE602			
204	3' - 0"	7' - 0"	1 3/4"	A	HM	PNT	HW-2	2	HM	PNT	1/AE602	6/AE602	11/AE602			
205	3' - 0"	7' - 0"	1 3/4"	A	HM	PNT	HW-2	2	HM	PNT	1/AE602	6/AE602	11/AE602			
206	6' - 0"	7' - 0"	1 3/4"	D	HM	PNT	HW-7A	2	HM	PNT	1/AE602	6/AE602	11/AE602	60 MIN		
206A	6' - 0"	7' - 0"	1 3/4"	D	HM	PNT	HW-7A	2	HM	PNT	1/AE602	6/AE602	11/AE602	60 MIN		
207	3' - 0"	7' - 0"	1 3/4"	A	HM	PNT	HW-2	2	HM	PNT	1/AE602	6/AE602	11/AE602	60 MIN		
208	2' - 11 7/8"	6' - 11 1/2"	1 3/4"	G	ALUM	HPC	HW-6A	12	ALUM	HPC	1F/AE630	1G/AE630	1F/AE630			
209	3' - 2"	7' - 2"	1 3/4"	G1	ALUM	HPC	HW-4	9	ALUM	HPC					DEMOUNTABLE PARTITION (NB)	
210	3' - 2"	7' - 2"	1 3/4"	G1	ALUM	HPC	HW-4	9	ALUM	HPC					DEMOUNTABLE PARTITION (NB)	
211	3' - 2"	7' - 2"	1 3/4"	G1	ALUM	HPC	HW-4	9	ALUM	HPC					DEMOUNTABLE PARTITION (NB)	
212	3' - 0"	7' - 0"	1 3/4"	A	HM	PNT	HW-2	2	HM	PNT	1/AE602	6/AE602	11/AE602			
213	3' - 0"	7' - 0"	1 3/4"	A	HM	PNT	HW-2	2	HM	PNT	1/AE602	6/AE602	11/AE602			
214	3' - 0"	7' - 0"	1 3/4"	A	HM	PNT	HW-3	2	HM	PNT	1/AE602	6/AE602	11/AE602			
215A	3' - 0"	7' - 0"	1 3/4"	B	HM	PNT	HW-7	2	HM	PNT	1/AE602	6/AE602	11/AE602			
215B	3' - 0"	7' - 0"	1 3/4"	B	HM	PNT	HW-7	2	HM	PNT	1/AE602	6/AE602	11/AE602			
216	3' - 0"	7' - 0"	1 3/4"	B	HM	PNT	HW-8	2	HM	PNT	1/AE602	6/AE602	11/AE602			
217	3' - 2"	7' - 2"	1 3/4"	G1	ALUM	HPC	HW-4	9	ALUM	HPC	1/AE602	6/AE602	11/AE602		DEMOUNTABLE PARTITION (NB)	
219	3' - 2"	7' - 2"	1 3/4"	G1	ALUM	HPC	HW-4	9	ALUM	HPC	1C/AE630	1D/AE630	1C/AE630		DEMOUNTABLE PARTITION SLIDING DOOR	
220	3' - 2"	7' - 2"	1 3/4"	G1	ALUM	HPC	HW-4	9	ALUM	HPC	1C/AE630	1D/AE630	1C/AE630		DEMOUNTABLE PARTITION SLIDING DOOR	
222	3' - 2"	7' - 2"	1 3/4"	G1	ALUM	HPC	HW-4	9	ALUM	HPC	1C/AE630	1D/AE630	1C/AE630		DEMOUNTABLE PARTITION SLIDING DOOR	
223	3' - 2"	7' - 2"	1 3/4"	G1	ALUM	HPC	HW-4	9	ALUM	HPC	1C/AE630	1D/AE630	1C/AE630		DEMOUNTABLE PARTITION SLIDING DOOR	
224	3' - 2"	7' - 2"	1 3/4"	G1	ALUM	HPC	HW-4	8	ALUM	HPC	1C/AE630	1D/AE630	1C/AE630		DEMOUNTABLE PARTITION SLIDING DOOR	
225	3' - 2"	7' - 2"	1 3/4"	G1	ALUM	HPC	HW-4	9	ALUM	HPC	1C/AE630	1D/AE630	1C/AE630		DEMOUNTABLE PARTITION SLIDING DOOR	
226	3' - 2"	7' - 2"	1 3/4"	G1	ALUM	HPC	HW-4	9	ALUM	HPC	1C/AE630	1D/AE630	1C/AE630		DEMOUNTABLE PARTITION SLIDING DOOR	
228	3' - 2"	7' - 2"	1 3/4"	G1	ALUM	HPC	HW-4	9	ALUM	HPC	1C/AE630	1D/AE630	1C/AE630		DEMOUNTABLE PARTITION SLIDING DOOR	
229	3' - 0"	7' - 0"	1 3/4"	A	HM	PNT	HW-3	2	HM	PNT	1/AE602	6/AE602	11/AE602			
230	3' - 2"	7' - 2"	1 3/4"	G1	ALUM	HPC	HW-4	9	ALUM	HPC	1C/AE630	1D/AE630	1C/AE630		DEMOUNTABLE PARTITION SLIDING DOOR	
231A	3' - 0"	7' - 0"	1 3/4"	B	HM	PNT	HW-7	2	HM	PNT	3/AE603	4/AE603	5/AE603			
231B	3' - 0"	7' - 0"	1 3/4"	B	HM	PNT	HW-7	2	HM	PNT	1/AE602	6/AE602	11/AE602			
232	3' - 2"	7' - 2"	1 3/4"	G1	ALUM	HPC	HW-4	8	ALUM	HPC	1C/AE630	1D/AE630	1C/AE630		DEMOUNTABLE PARTITION SLIDING DOOR	
233	3' - 2"	7' - 2"	1 3/4"	G1	ALUM	HPC	HW-4	9	ALUM	HPC	1C/AE630	1D/AE630	1C/AE630		DEMOUNTABLE PARTITION SLIDING DOOR	
234	3' - 2"	7' - 2"	1 3/4"	G1	ALUM	HPC	HW-4	9	ALUM	HPC	1C/AE630	1D/AE630	1C/AE630		DEMOUNTABLE PARTITION SLIDING DOOR	
235	3' - 2"	7' - 2"	1 3/4"	G1	ALUM	HPC	HW-4	9	ALUM	HPC	1C/AE630	1D/AE630	1C/AE630		DEMOUNTABLE PARTITION SLIDING DOOR	
237	3' - 0"	7' - 0"	1 3/4"	A	HM	PNT	HW-3	2	HM	PNT	1/AE602	6/AE602	11/AE602	60 MIN		
238	3' - 0"	7' - 0"	1 3/4"	A	HM	PNT	HW-3	2	HM	PNT	1/AE602	6/AE602	11/AE602	60 MIN		
301	3' - 0"	7' - 0"	1 3/4"	A	HM	PNT	HW-2	2	HM	PNT	1/AE602	6/AE602	11/AE602			
302	3' - 0"	7' - 0"	1 3/4"	A	HM	PNT	HW-3	2	HM	PNT	1/AE602	6/AE602	11/AE602			
303	3' - 0"	7' - 0"	1 3/4"	A	HM	PNT	HW-3	2	HM	PNT	1/AE602	6/AE602	11/AE602			
E1A	3' - 0"	7' - 0"	1 3/4"	A	HM	PNT	HW-3	2	HM	PNT	1/AE602	6/AE602	11/AE602	120 MIN		
M1	3' - 0"	7' - 0"	1 3/4"	A	HM	PNT	HW-1	2	HM	PNT	1/AE602	6/AE602	11/AE602	60 MIN		
M2	3' - 0"	7' - 0"	1 3/4"	A	HM	PNT	HW-1	2	HM	PNT	1/AE602	6/AE602	11/AE602	60 MIN		

DOOR SCHEDULE NOTES:

1. PROVIDE POWERED DOOR OPENER.
2. INSULATED DOOR(S).
3. PROVIDE (1) ONE PAIR OF ELECTRIC LATCH RETRACTORS FOR USE IN BUILDING SECURITY SYSTEM.

GENERAL NOTES:

1. SEE SHEET AE620 AND ASE621 FOR ALUMINUM CURTAIN WALL AND STOREFRONT FRAME TYPES AND DETAILS REFERENCE.
2. SEE SHEETS G-108 THRU G-111 FOR COORDINATION OF FIRE RATING, SMOKE RATING, SELF-LATCHING, AND SELF-CLOSING REQUIREMENTS.
3. UNDERCUT INTERIOR DOORS 3/4" (MAX ALLOWED BY NFPA 80).
4. PROVIDE DOORS WITH CONSTRUCTION CORES.
5. SEE SHEET AE602 FOR DOOR TYPES.

DOOR SCHEDULE LEGEND:

ALUM = ALUMINUM
GALV = GALVANIZED
HM = HOLLOW METAL
HPC = HIGH PERFORMANCE COATING
MFR = MANUFACTURER
NAT = NATURAL FINISH
PNT = PAINT
SS = STAINLESS STEEL
STN = STAIN
STL = STEEL
WD = WOOD

NO.	DATE	DESCRIPTION	BY
1	02/13/2025	ADDENDUM NO.1	HMG

REVISIONS

TYLER G. BARTER No. 2962
1-29-25

DRAWN BY: MJD
CHECK BY: CET
NO.
DATE 01/29/2025

DEPARTMENT OF INLAND FISHERIES & WILDLIFE
TITLE NEW OFFICE HEADQUARTERS
LOCATION AUGUSTA, ME
TITLE THIS DWG. DOOR SCHEDULE

OAK POINT ASSOCIATES
ARCHITECTURE ◻ ENGINEERING ◻ PLANNING
231 Main Street, Biddeford, Maine 04005 207.283.0193

DRAWING NO. AE601
SHEET NO. 143 OF 239

DOOR SCHEDULE - EXTERIOR/STAIRS

NO.	DOOR WIDTH	DOOR HEIGHT	DOOR THICKNESS	DOOR TYPE	DOOR MAT	DOOR FINISH	HARDWARE TYPE	FRAME TYPE	FRAME MAT	FRAME FINISH	DETAILS HEAD	DETAILS JAMB	DETAILS SILL	FIRE RATING	NOTES	DOOR SHADES
E01	6' - 0"	7' - 0"	1 3/4"	E	ALUM	HPC	EH-1	S1	ALUM	HPC	3C/AE621	3D/AE621	3F/AE621			
E02	3' - 0"	7' - 0"	1 3/4"	D	ALUM	HPC	EH-3	C3	ALUM	HPC	1C/AE621	1D/AE621	1F/AE621			
E03	6' - 0"	7' - 0"	1 3/4"	E	ALUM	HPC	EH-2	S2	ALUM	HPC	3C/AE621	3D/AE621	3F/AE621			
E04	3' - 0"	7' - 0"	1 3/4"	D	ALUM	HPC	EH-3	C4	ALUM	HPC	1C/AE621	1D/AE621	1F/AE621			
E05	3' - 6"	7' - 6"	1 3/8"	H	WD	STN	EH-4	6	WD	PNT	3/AE603	4/AE603	5/AE603			
E06	3' - 6"	7' - 6"	1 3/8"	H	WD	STN	EH-4	6	WD	PNT	3/AE603	4/AE603	5/AE603			
E07	3' - 0"	7' - 0"	1 3/4"	D	ALUM	HPC	EH-3	C2	ALUM	HPC	1C/AE621	1D/AE621	1F/AE621			
E08	3' - 0"	7' - 0"	1 3/4"	F	ALUM	HPC	EH-3	1	HM	PNT	6/AE603	7/AE603	8/AE603			
E09	3' - 0"	7' - 0"	1 3/4"	F	ALUM	HPC	EH-3	1	HM	PNT	6/AE603	7/AE603	8/AE603			
E10	3' - 0"	7' - 0"	1 3/4"	F	ALUM	HPC	EH-3	1	HM	PNT	6/AE603	7/AE603	8/AE603			
E11	9' - 4"	9' - 0"	2"	J	STL	GALV	EH-5	MFR	ALUM	HPC	1/AE603	2/AE603	1/AE603		OVERHEAD DOOR	
E12	3' - 0"	7' - 0"	1 3/4"	A	HM	PNT	EH-3	1	HM	PNT	6/AE603	7/AE603	8/AE603			
E13	6' - 0"	7' - 0"	1 3/4"	E	ALUM	HPC	EH-2	S3	ALUM	HPC	3C/AE621	3D/AE621	3F/AE621			
S1A	3' - 0"	7' - 0"	1 1/2"	C	WD	NAT	HW-1	2	HM	PNT	3/AE602	8/AE602	11/AE602	120 MIN		
S1B	3' - 0"	7' - 0"	1 1/2"	C	HM	PNT	HW-1	4	HM	PNT	3/AE602	8/AE602	11/AE602	120 MIN		
S1C	3' - 0"	7' - 0"	1 1/2"	C	HM	PNT	HW-1	4	HM	PNT	3/AE602	8/AE602	11/AE602	120 MIN		
S1D	3' - 0"	7' - 0"	1 1/2"	C	HM	PNT	HW-1	4	HM	PNT	3/AE602	8/AE602	11/AE602	120 MIN		
S2A	3' - 0"	7' - 0"	1 1/2"	C	HM	PNT	HW-1	4	HM	PNT	5/AE602	10/AE602	11/AE602	120 MIN		
S2B	3' - 0"	7' - 0"	1 1/2"	C	HM	PNT	HW-1	4	HM	PNT	5/AE602	10/AE602	11/AE602	60 MIN		
S3A	3' - 0"	7' - 0"	1 1/2"	C	HM	PNT	HW-1	4	HM	PNT	4/AE602	9/AE602	11/AE602	120 MIN		
S3A1	3' - 0"	7' - 0"	1 1/2"	C	HM	PNT	HW-1	4	HM	PNT	4/AE602	9/AE602	11/AE602	120 MIN		
S3B	3' - 0"	7' - 0"	1 1/2"	C	HM	PNT	HW-1	4	HM	PNT	3/AE602	8/AE602	11/AE602	120 MIN		
S3B1	3' - 0"	7' - 0"	1 1/2"	C	HM	PNT	HW-1	4	HM	PNT				120 MIN		
S3C	3' - 0"	7' - 0"	1 1/2"	C	HM	PNT	HW-1	4	HM	PNT	3/AE602	8/AE602	11/AE602	120 MIN		
S3C1	3' - 0"	7' - 0"	1 1/2"	C	HM	PNT	HW-1	4	HM	PNT				120 MIN		
S3D	3' - 0"	7' - 0"	1 1/2"	C	HM	PNT	HW-1	4	HM	PNT				120 MIN		

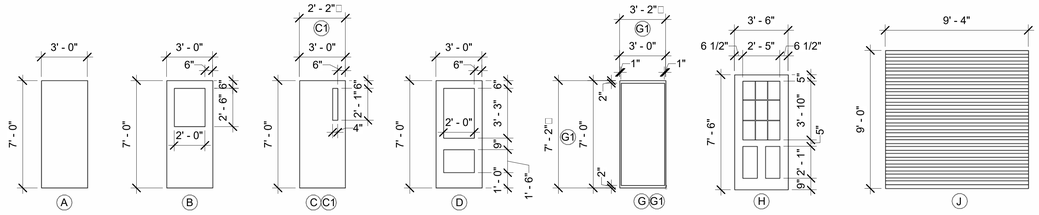

DOOR TYPES
SCALE: 1/4"=1'-0"

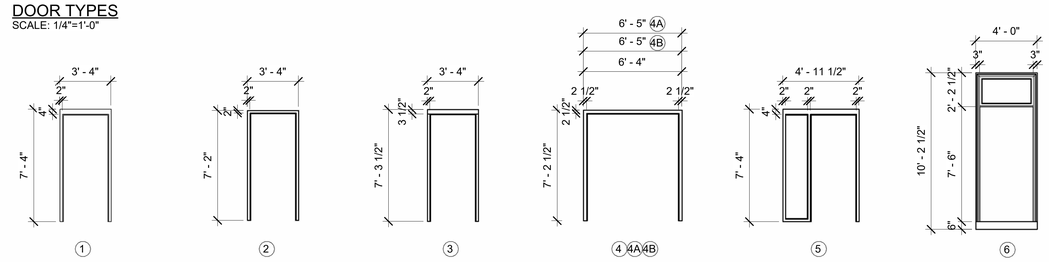

FRAME TYPES
SCALE: 1/4"=1'-0"

DOOR SCHEDULE NOTES:

1. PROVIDE POWERED DOOR OPENER.
2. INSULATED DOOR(S).
3. PROVIDE (1) ONE PAIR OF ELECTRIC LATCH RETRACTORS FOR USE IN BUILDING SECURITY SYSTEM.

DOOR SCHEDULE LEGEND:

ALUM = ALUMINUM
GALV = GALVANIZED
HM = HOLLOW METAL
HPC = HIGH PERFORMANCE COATING
MFR = MANUFACTURER
NAT = NATURAL FINISH
PNT = PAINT
SS = STAINLESS STEEL
STN = STAIN
STL = STEEL
WD = WOOD

GENERAL NOTES:

1. SEE SHEET AE620 AND ASE621 FOR ALUMINUM CURTAIN WALL AND STOREFRONT FRAME TYPES AND DETAILS REFERENCE.
2. SEE SHEETS G-108 THRU G-111 FOR COORDINATION OF FIRE RATING, SMOKE RATING, SELF-LATCHING, AND SELF-CLOSING REQUIREMENTS.
3. UNDERCUT INTERIOR DOORS 3/4" (MAX ALLOWED BY NFPA 80).
4. PROVIDE DOORS WITH CONSTRUCTION CORES.
5. SEE SHEET AE602 FOR DOOR TYPES.

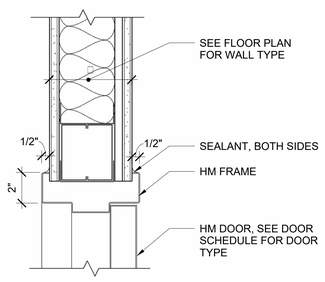

1 DOOR HEAD DETAIL - TYPE NA
AE602 SCALE: 3" = 1'-0" WALL TYPES NB, 1C AND 1D (SIM)

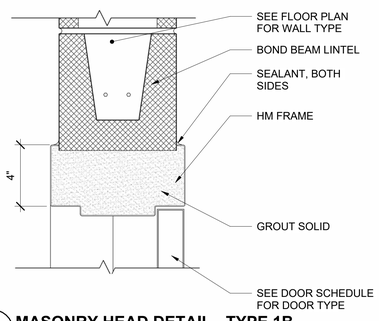

2 MASONRY HEAD DETAIL - TYPE 1B
AE602 SCALE: 3" = 1'-0"

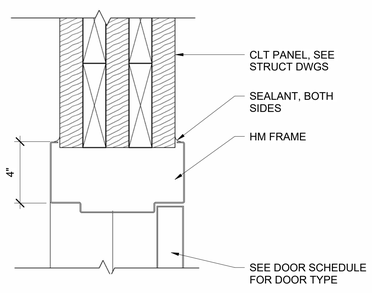

3 CLT HEAD DETAIL - TYPE 2A
AE602 SCALE: 3" = 1'-0" WALL TYPE 1A (SIM)

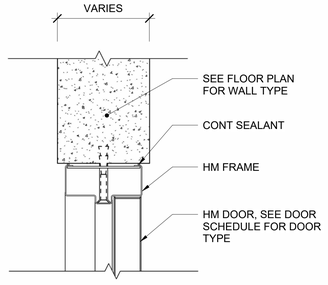

4 DOOR HEAD DETAIL - CONC WALL
AE602 SCALE: 3" = 1'-0"

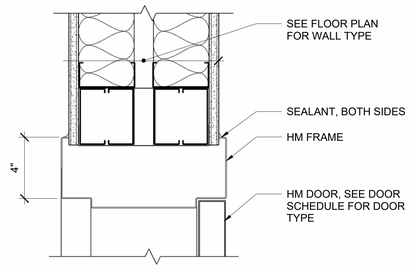

5 DOOR HEAD DETAIL - TYPE 1F
AE602 SCALE: 3" = 1'-0"

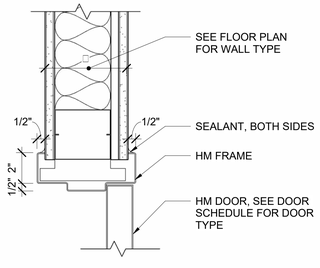

6 DOOR JAMB DETAIL - TYPE NA
AE602 SCALE: 3" = 1'-0" WALL TYPES NB, 1C AND 1D (SIM)

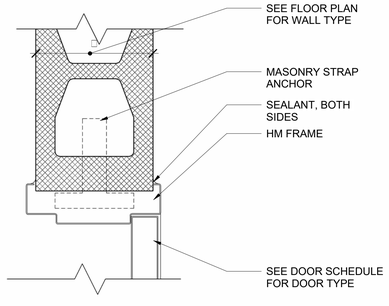

7 MASONRY JAMB DETAIL - TYPE 1B
AE602 SCALE: 3" = 1'-0"

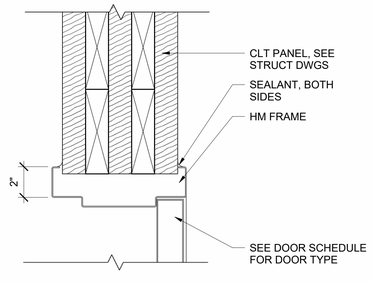

8 CLT JAMB DETAIL - TYPE 2A
AE602 SCALE: 3" = 1'-0" WALL TYPE 1A (SIM)

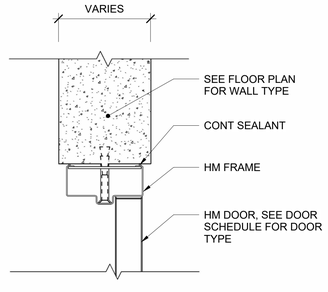

9 DOOR JAMB DETAIL - CONC WALL
AE602 SCALE: 3" = 1'-0"

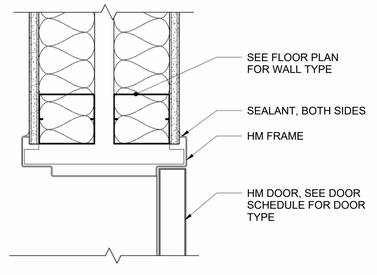

10 DOOR JAMB DETAIL - TYPE 1F
AE602 SCALE: 3" = 1'-0"

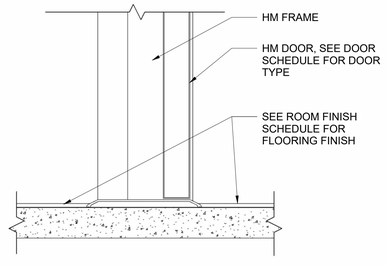

11 DOOR SILL DETAIL - INTERIOR HM
AE302 AE602 SCALE: 3" = 1'-0"

GRAPHIC SCALES

1/4"=1'-0" 4' 2' 0 4' 8'
3"=1'-0" 6" 4" 2" 0 6"

CHECK GRAPHIC SCALES BEFORE USING

NO.	DATE	DESCRIPTION	BY
1	02/13/2025	ADDENDUM NO.1	HMG

REVISIONS

LICENSED ARCHITECT TYLER E. BISHOP No. 4362 STATE OF MAINE 1-29-25

DRAWN BY: MJD
CHECK BY: CET
DATE 01/29/2025

DEPARTMENT OF INLAND FISHERIES & WILDLIFE

TITLE: NEW OFFICE HEADQUARTERS
LOCATION: AUGUSTA, ME
TITLE THIS DWG: DOOR FRAME TYPE AND DOOR DETAILS

OAK POINT ASSOCIATES
231 Main Street, Biddeford, Maine 04005 207.283.0193

DRAWING NO. AE602
SHEET NO. 144 OF 239

2/18/2025 10:56:53 AM
C:\Users\Heidi\Documents\22205.04-IFB\W-ARCH_v22_hgardnerYBPQX.rvt

WINDOW SCHEDULE

MATERIAL				DETAILS			NOTES
TYPE	WIDTH	HEIGHT	MAT	FINISH	HEAD	JAMB	SILL	
A	4'-0"	4'-6"	ALUM	HPC	2/AE622	4/AE622	6/AE622	
B	4'-0"	6'-6"	ALUM	HPC	1 OR 2/AE622	3 OR 4/AE622	5 OR 6/AE622	
C	8'-0"	6'-5"	ALUM	HPC	2/AE622	4/AE622	6/AE622	
D	6'-0"	4'-0"	ALUM	HPC	1/AE622	3/AE622	5/AE622	
E	3'-2"	6'-9 3/4"	ALUM	PNT	7/AE622	8/AE622	9/AE622	
F	3'-2"	5'-6"	ALUM	PNT	7/AE622	8/AE622	9/AE622	
G	3'-2"	5'-6"	ALUM	PNT	7/AE622	8/AE622	9/AE622	
H	4'-8 3/4"	9'-0 1/2"	WOOD	PNT	7/AE622	8/AE622	9/AE622	

GENERAL NOTES:

1. BASIS OF DESIGN:
   CURTAIN WALL SYSTEM: YKK, YCW 750 XT (2-1/2" X 7-1/2" MULLION)
   EXTERIOR STOREFRONT SYSTEM: YKK, YES 60 XT (2" X 6" MULLION)
   INTERIOR STOREFRONT SYSTEM: YKK, YES 40 FI (2" X 4" MULLION)
   INTERIOR RATED STOREFRONT SYSTEM: SAFTIFIRST, SUPERLITE II-XL 60 GLASS WITH GPX ARCHITECTURAL SERIES FRAMING (2-1/2" X 4" MULLION)
   WINDOW SYSTEMS: MARVIN ESSENTIAL
   RATED WINDOW SYSTEMS: SAFTIFIRST, SUPERLITE II-XL 120 IGU GLASS WITH GPX ARCHITECTURAL SERIES FRAMING (2-1/2" X 4" MULLION)
2. GC TO CONFIRM RO SIZES ON ALL OPENINGS PRIOR TO PURCHASE.
3. INCLUDE BRICK MOLD AT ALL WINDOWS IN EXISTING MASONRY OPENINGS IN CETA BUILDING.
4. * INDICATES FIRE RATED GLAZING, SEE FLOOR PLANS AND ELEVATIONS FOR LOCATIONS.
5. ' INDICATES GLAZING FILM, SEE FLOOR PLANS AND ELEVATIONS FOR LOCATIONS.

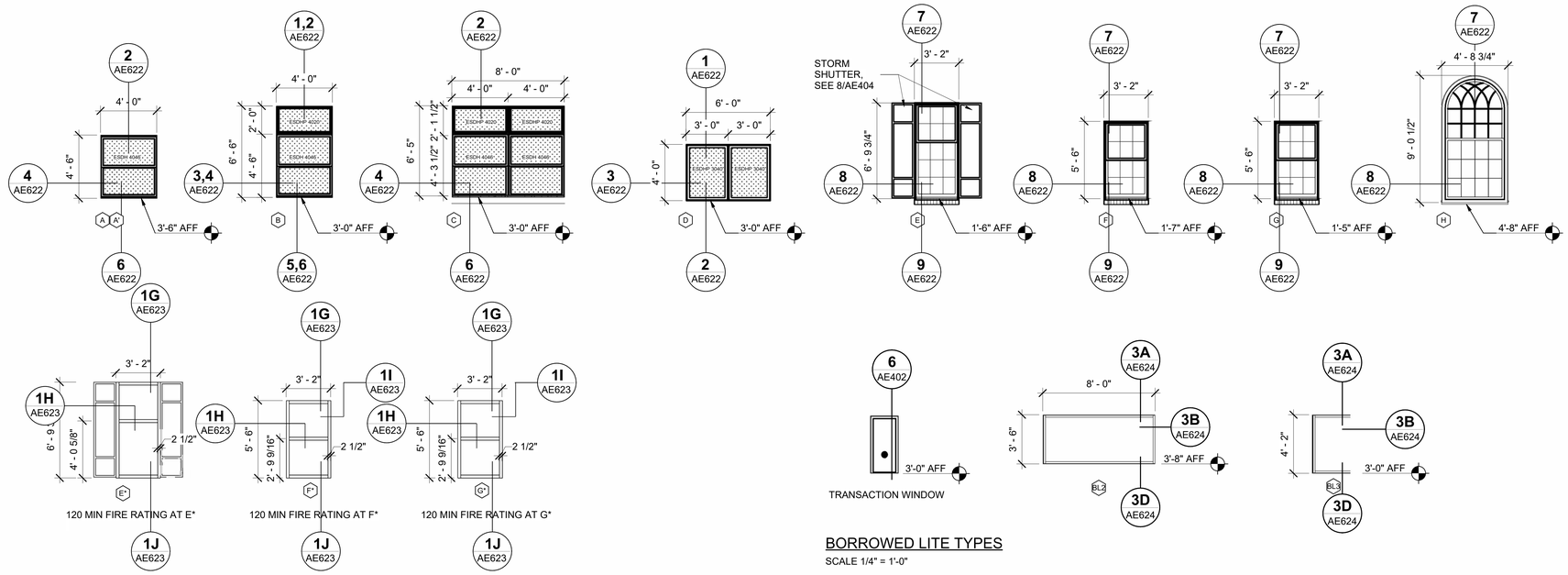

WINDOW TYPES

SCALE 1/4" =1'-0"

BORROWED LITE TYPES

SCALE 1/4" = 1'-0"

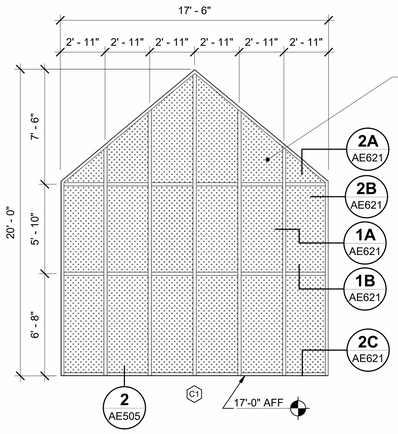

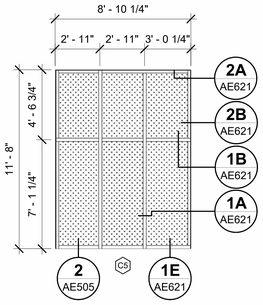

CURTAINWALL TYPES

SCALE 1/4" = 1'-0"

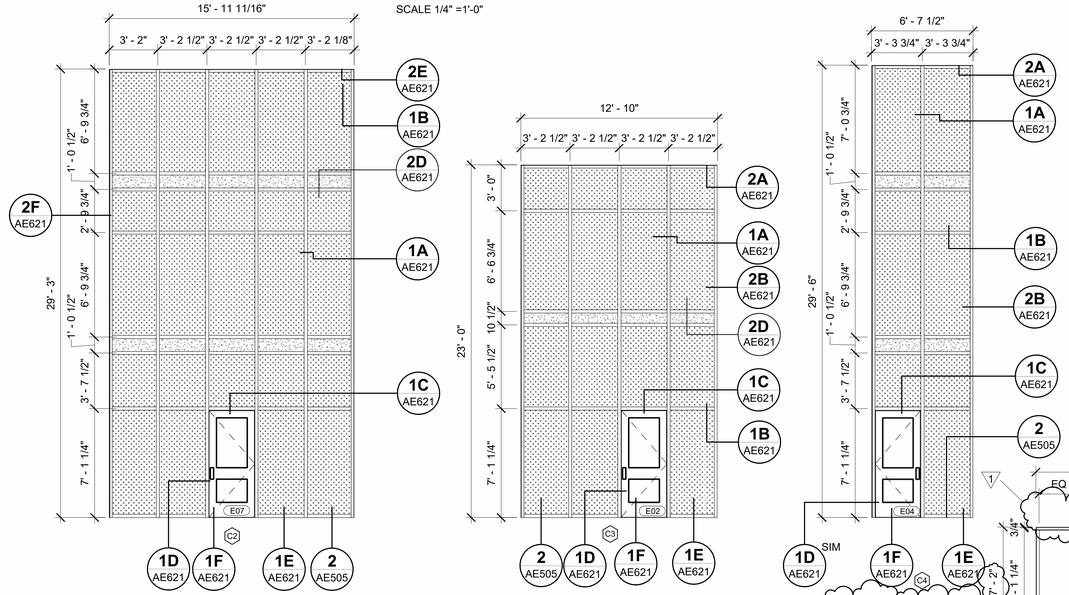

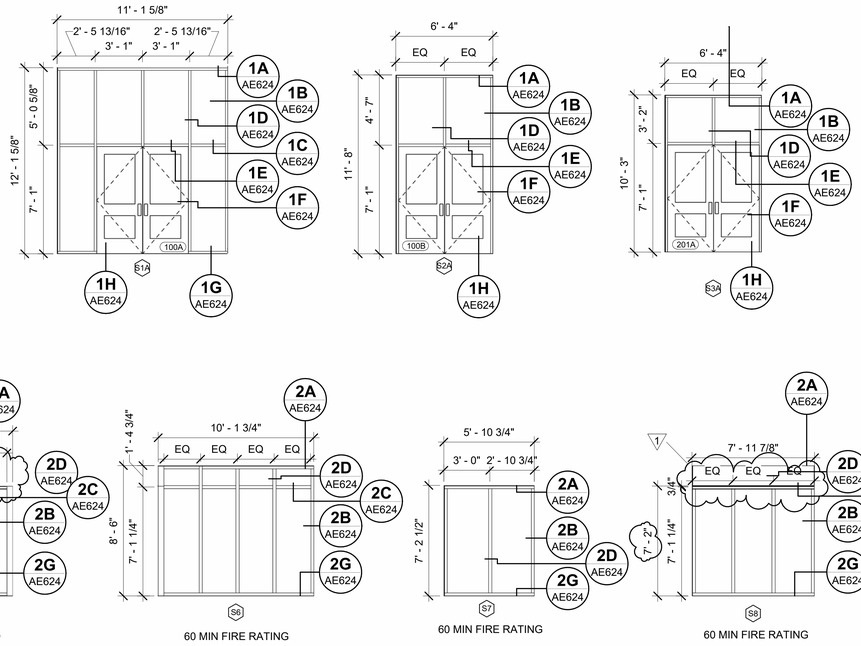

INTERIOR STOREFRONT TYPES

SCALE 1/4" = 1'-0"

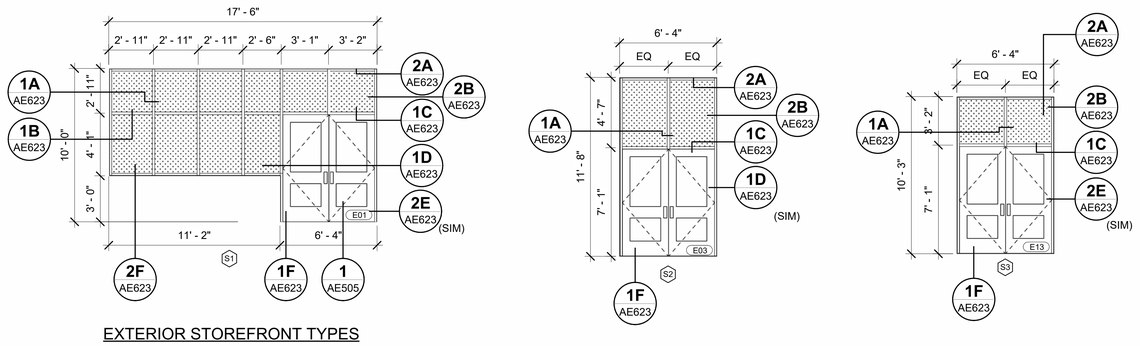

EXTERIOR STOREFRONT TYPES

SCALE 1/4" = 1'-0"

GRAPHIC SCALE

1/4"=1'-0"

CHECK GRAPHIC SCALE BEFORE USING

NO.	DATE	DESCRIPTION	BY
	02/13/2025	ADDENDUM NO.1	HMG

REVISIONS

DRAWN BY: MJD
CHECK BY: CET
DATE 01/29/2025

LICENSED ARCHITECT TYLER E. THOMAS 1-29-25 STATE OF MAINE

DEPARTMENT OF INLAND FISHERIES & WILDLIFE

TITLE: NEW OFFICE HEADQUARTERS
LOCATION: AUGUSTA, ME
TITLE THIS DWG.: WINDOW SCHEDULE

OAK POINT ASSOCIATES
231 Main Street, Biddeford, Maine 04005 207.283.0193

DRAWING NO. AE620
SHEET NO. 146 OF 239

2/13/2025 12:39:52 PM
C:\Users\Nedi\Documents\22205.04-IF&W-ARCH_v22_hgardnerYBPQX.rvt

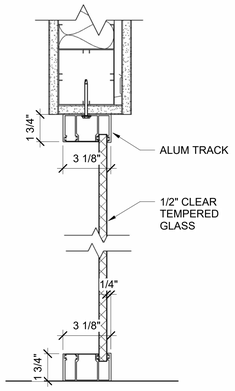

1A GLASS WALL SECTION

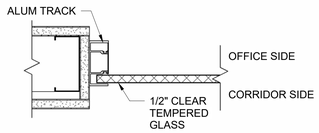

1B GLASS WALL PLAN DETAIL

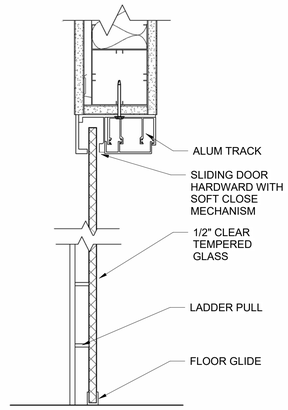

1C GLASS WALL SLIDING DOOR SECTION

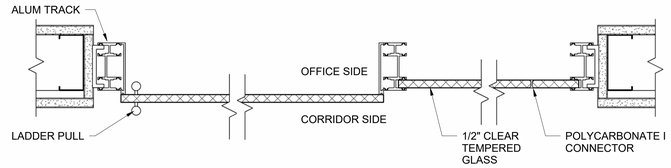

1D SLIDING GLASS DOOR PLAN DETAIL

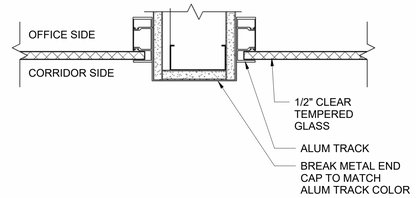

1E GLASS WALL PLAN END TRIM DETAIL

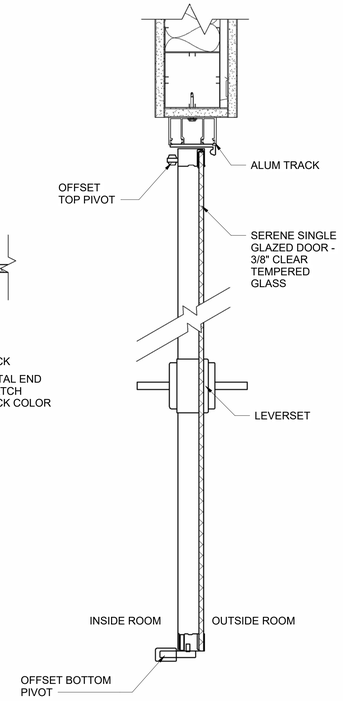

1F SWING DOOR SECTION

1 TYP DEMOUNTABLE PARTITION DETAILS
AE630 / AE630 SCALE: 1 1/2 " = 1'-0"

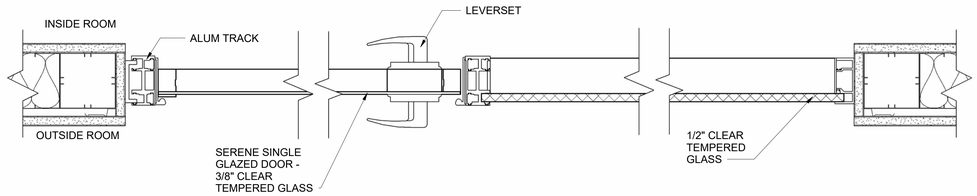

1G ENLARGED PLAN DETAIL

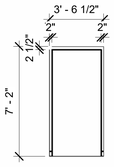

7

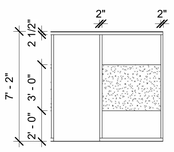

8

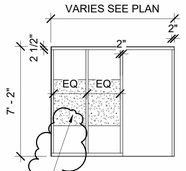

9

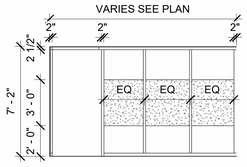

10

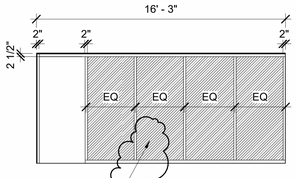

11

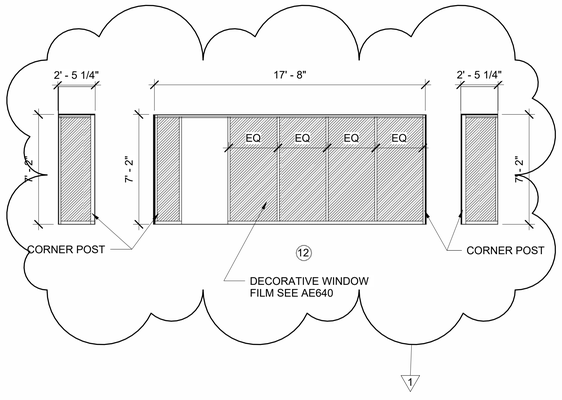

12

2 DEMOUNTABLE PARTITION FRAME TYPES
AE601 / AE630 SCALE: 1/4" = 1'-0"

PRIVACY WINDOW FILM SEE AE640

DECORATIVE WINDOW FILM SEE AE640

DECORATIVE WINDOW FILM SEE AE640

GRAPHIC SCALES

1/4"=1'-0" 4' 2' 0 4' 8'

1-1/2"=1'-0" 1' 8" 4" 0 1'

CHECK GRAPHIC SCALE BEFORE USING

NO.	DATE	DESCRIPTION	BY
1	02/13/2025	ADDENDUM NO.1	HMG

REVISIONS

LICENSED ARCHITECT TYLER B. GERRITY No. 4402 STATE OF MAINE 1-29-25

DRAWN BY: CET
CHECK BY: TGB
NO.
DATE 01/29/2025

DEPARTMENT OF INLAND FISHERIES & WILDLIFE

TITLE: NEW OFFICE HEADQUARTERS
LOCATION: AUGUSTA, ME
TITLE THIS DWG.: DEMOUNTABLE PARTITION DETAILS

OAK POINT ASSOCIATES
231 Main Street, Biddeford, Maine 04005 207.283.0193

DRAWING NO. AE630
SHEET NO. 151 OF 239

2/13/2025 12:40:11 PM
C:\Users\Revit\Documents\22205.04-IF&W-ARCH_v22_hgardnerYBPQX.rvt

ROOM FINISH SCHEDULE

NO.	ROOM NAME	FLOOR	BASE	WALLS NORTH WALL	WALLS EAST WALL	WALLS SOUTH WALL	WALLS WEST WALL	CEILING MATERIAL	WINDOW SHADES	WINDOW FILM	NOTES
001	CORRIDOR	CONC	-	P-1	P-1	P-1	P-1	ACT			
002	STORAGE							ACT			
003	MECH							ACT			
004	STORAGE							ACT			
005	MECH							ACT			
006	DATA							ACT			
100	LOBBY / MUSEUM	PT-1	PB	P-1	P-1/WC	P1	P-1/WC	CLT/ACT-1			1,2,4
100A	VESTIBULE	WM-1,2	RB-1	P-1	P-1	P-1	P-1	CLT			
100B	VESTIBULE	WM-1,2	RB-1	P-1	P-1	P-1	P-1	CLT			
101	TOILET	PT-2	PB	P-3/CWT-1,2	P-3/CWT-1,2	P-3	P-3	GYP P-4			
102A	CONFERENCE ROOM	CPTT-2,3	WD	P-1/AWP-2	P-1/MW	P-1	P-1	CLT	WS-2		
102B	CONFERENCE ROOM	CPTT-2,3	WD	P-1/AWP-2	P-1/MW	P1	P-1/MW	CLT	WS-2		
102C	CONFERENCE ROOM	CPTT-2,3	WD	P-1/AWP-2	P-1	P-1	P-1/MW	CLT	WS-2		
103	LACTATION	LVT-1	RB-1	P-3	P-3	P-3	P-3	CLT			
104	CORRIDOR	PT-2	PB	P-1	P-1	P-1	P-1	ACT-1/CLT			
105	STORAGE/ AV	LVT-1	RB	P-1	P-1	P-1	P-1	CLT			
106	TOILET	PT-2	PB	P-3	P-3/CWT-1,2	P-3/CWT-1,2	P-3	GYP P-4			
107	TOILET	PT-2	PB	P-3/CWT-1,2	P-3/CWT-1,2	P-3	P-3	GYP P-4			
108	TOILET	PT-2	PB	P-3	P-3/CWT-1,2	P-3/CWT-1,2	P-3	GYP P-4			
109	OPEN OFFICE	CPTT-1	RB-1	P-1/AWP-2	P-1/AWP-2	P-1	P-1	CLT/ACT-2B	WS-1		
110	CORRIDOR	CPTT-1	RB-1	P-1	P-1	P-1	P-1	CLT/ACT-2B			
111	OFFICE	CPTT-1	RB-1	P-1	P-1	P-1	P-1	CLT/ACT-2B			
111A	WRITTEN TEST	CPTT-1	RB-1	P-1	P-1	P-1	P-1	CLT/ACT-2B	WS-1		
112	OPEN OFFICE	CPTT-1	RB-1	P-1/AWP-2	P-1	P-1,2/AWP-3	P-1,2	CLT/ACT-2B	WS-1		
113	MAPPING & ID TESTING	CPTT-1	RB-1	P-1	P-1	P-1	P-1	CLT	WS-1		
114	OFFICE	CPTT-1	RB-1	P-1	P-1	GW	P-1	CLT	WS-1	WF-1	
115	OFFICE	CPTT-1	RB-1	P-1	P-1	GW	P-1	CLT	WS-1	WF-1	
116	OFFICE	CPTT-1	RB-1	P-1	P-1	GW	P-1	CLT	WS-1	WF-1	
117	OFFICE	CPTT-1	RB-1	P-1	P-1	GW	P-1	CLT	WS-1	WF-1	
118	OPEN SEATING	CPTT-4,5	RB-1	P-1	P-1	P-1	P-1	CLT/ACT-2A	WS-1		
119	PRIVATE	CPTT-1	RB-1	P-1	P-1	P-1	P-1	CLT		WF-1	
120	TOILET	EP-2	EP-2	P-3	P-3/CWT-1,2	P-3/CWT-1,2	P-3	GYP/P-4			
121	TOILET	EP-2	EP-2	P-3/CWT-1,2	P-3/CWT-1,2	P-3	P-3	GYP/P-4			
122	CANTEEN	LVT-1	RB-1	P-1	P-1	P-1	P-1	CLT			
123	OFFICE	CPTT-1	RB-1	GW	P-1	P-1	P-1	CLT	WS-1	WF-1	
124	OFFICE	CPTT-1	RB-1	GW	P-1	P-1	P-1	CLT	WS-1	WF-1	
125	OFFICE	CPTT-1	RB-1	GW	P-1	P-1	P-1	CLT	WS-1	WF-1	
126	OFFICE	CPTT-1	RB-1	GW	P-1	P-1	P-1	CLT	WS-1	WF-1	
127	OPEN OFFICE	CPTT-1	RB-1	P-1,2/AWP-3	P-1	GW/P-1	P-1	CLT/ACT-2A	WS-1		
127A	OPEN OFFICE	CPTT-1	RB-1	P-1	P-1	P-1	P-1	CLT/ACT-2A			
128	SHARED STORAGE	CPTT-1	RB-1	P-1	P-1	P-1	P-1	CLT			
129	ISSUE/ MAIL ROOM	CPTT-1	RB-1	P-1	P-1	P-1	P-1	CLT			
130	DATA	CONC	RB-1	P-1	P-1	P-1	P-1	CLT			
131	CUST	CONC	RB-1	WP	WP	WP	WP	CLT			
132	ELEC	CONC	RB-1	P-1	P-1	P-1	P-1	CLT			
133	BREAK ROOM	LVT-1	RB-1	P-1	P-1	P-1	P-1	ACT-1	WS-1	WF-1	
134	OPEN OFFICE	CPTT-1	RB-1	P-1	P-1	P-1	-	ACT-1	WS-1		
135	BREAK-OUT AREA	LVT-1	RB-1	P-1	-	P-1,2	P-1	WD	WS-1		
136	COPY ROOM	CPTT-1	RB-1	P-1	P-1	P-1	P-1/GW	ACT-1	WS-1	WF-1	
137	CORRIDOR	CPTT-1,4,5	RB-1	P-1	P-1/GW	P-1	P-1/GW	WD/ACT-1	WS-1		
138	VACANT OFFICE	CPTT-1	RB-1	P-1	P-1	P-1	GW	ACT-1	WS-1	WF-1	
139	OFFICE	CPTT-1	RB-1	P-1	GW	P-1	P-1	ACT-1	WS-1	WF-1	
140	VACANT OFFICE	CPTT-1	RB-1	P-1	P-1	P-1	GW	ACT-1	WS-1	WF-1	
141	OFFICE	CPTT-1	RB-1	P-1	GW	P-1	P-1	ACT-1	WS-1	WF-1	
142	OFFICE	CPTT-1	RB-1	P-1	P-1	P-1	GW	ACT-1	WS-1	WF-1	
143	OFFICE	CPTT-1	RB-1	P-1	GW	P-1	P-1	ACT-1	WS-1	WF-1	
144	OFFICE	CPTT-1	RB-1	P-1	P-1	P-1	GW	ACT-1	WS-1	WF-1	
145	OFFICE	CPTT-1	RB-1	P-1	GW	P-1	P-1	ACT-1	WS-1	WF-1	
146	VACANT OFFICE	CPTT-1	RB-1	P-1	P-1	P-1	GW	ACT-1	WS-1	WF-1	
147	OFFICE	CPTT-1	RB-1	P-1	GW	P-1	P-1	ACT-1	WS-1	WF-1	
148	OFFICE	CPTT-1	RB-1	P-1	P-1	P-1	GW	ACT-1	WS-1	WF-1	
149	OFFICE	CPTT-1	RB-1	P-1	GW	P-1	P-1	ACT-1	WS-1	WF-1	
150	OFFICE	CPTT-1	RB-1	P-1	P-1	P-1	GW	ACT-1	WS-1	WF-1	
151	OFFICE	CPTT-1	RB-1	P-1	GW	P-1	P-1	ACT-1	WS-1	WF-1	
152	CONFERENCE ROOM	CPTT-4,5	RB-2	P-1	P-1	P-1	GW	WD/GYP	WS-1	WF-2	
153	OFFICE	CPTT-1	RB-1	P-1	GW	P-1	P-1	ACT-1	WS-1	WF-1	
154	OFFICE	CPTT-1	RB-1	P-1	P-1	P-1	GW	ACT-1	WS-1	WF-1	
155	OPEN OFFICE	CPTT-1	RB-1	P-1	GW	P-1	P-1	ACT-1	WS-1	WF-1	
156	OFFICE	CPTT-1	RB-1	P-1	P-1	P-1	GW	ACT-1	WS-1	WF-1	
157	FUTURE OFFICE	CPTT-1	RB-1	P-1	GW	P-1	P-1	ACT-1	WS-1	WF-1	
158	DATA	CONC	RB-1	P-1	P-1	P-1	P-1	EXP			
159	CORRIDOR	LVT-1	RB-1	P-7	P-7	P-7	P-7	CLT			
160	STORAGE	CONC	RB-1	P-1	P-1	P-1	P-1	CLT			
161	NECROPSY	EP-1	EP-1	EPW	EPW	EPW	EPW	CLT	WS-1		3
162	FILES	LVT-1	RB-1	P-1	P-1	P-1	P-1	CLT			
163	TOILET	EP-2	EP-2	P-3/CWT-1,2	P-3/CWT-1,2	P-3	P-3	CLT			
164	CORRIDOR	EP-1	EP-1	P-7	P-7	P-7	P-7	CLT			
165	OPEN OFFICE	EP-1	EP-1	P-7	P-7	P-7	P-7	CLT	WS-1		
166	CUST	CONC	RB-1	WP	WP	WP	WP	CLT			
167	FISHERIES MAIN LAB	EP-1	EP-1	P-7	P-7	P-7	P-7	CLT	WS-1		
167A	COPY ROOM	LVT-1	RB-1	P-1	P-1	P-1	P-1	CLT			
168	BACTER- IOLOGY	EP-1	EP-1	P-7	P-7	P-7	P-7	CLT			
169	STORAGE	EP-1	EP-1	P-7	P-7	P-7	P-7	CLT			
170	TISSUE COLLECTION	EP-1	EP-1	P-7	P-7	P-7	P-7	CLT			
171	PCR ROOM	EP-1	EP-1	P-7	P-7	P-7	P-7	CLT			
200	CORRIDOR	CPTT-1/RUB/MAT-2	RB-1	P-1/AWP-1	P-1	P-1	P-1	CLT			
201	CORRIDOR	CPTT-1	RB-1	P-1	P-1	P-1	P-1	ACT-1			
201A	VEST	WM-1	RB-1	P-1	P-1	P1	P-1	GYP/P-4			
202	TOILET	EP-2	EP-2	P-3/CWT-1,2	P-3/CWT-1,2	P-3	P-3	GYP/P-4			
203	TOILET	EP-2	EP-2	P-3/CWT-1,2	P-3	P-3	P-3/CWT-1,2	GYP/P-4			
204	TOILET	EP-2	EP-2	P-3/CWT-1,2	P-3/CWT-1,2	P-3	P-3	GYP/P-4			
205	TOILET	EP-2	EP-2	P-3/CWT-1,2	P-3	P-3	P-3/CWT-1,2	GYP/P-4			
206	CORRIDOR	CPTT-1	RB-1	P-1	P-1	P-1	P-1	ACT-1			
206A	CORRIDOR	CPTT-1	RB-1	P-1/RAILING	P-1	P-1/RAILING	P-1	CLT			
207	TOILET	EP-2	EP-2	P-3/CWT-1,2	P-3/CWT-1,2	P-3	P-3	GYP/P-4			
208	CONFERENCE ROOM	CPTT-6	RB-2	GW	P-1	P-1	P-5	ACT-1		WF-3	
209	PLANS OFFICE	CPTT-1	RB-1	P-1	P-1	P-1	P-1	ACT-1	WS-1		
210	OFFICE	CPTT-1	RB-1	P-1	P-1	P-1	P-1	ACT-1	WS-1		
211	CANTEEN	LVT-1	RB-1	P-1	P-1	P-1	P-1	ACT-1			
212	TOILET	EP-2	EP-2	P-3/CWT-1,2	P-3	P-3	P-3/CWT-1,2	GYP/P-4			
213	TOILET	EP-2	EP-2	P-3/CWT-1,2	P-3/CWT-1,2	P-3	P-3	GYP/P-4			
214	DATA	CONC	RB-1	P-1	P-1	P-1	P-1	-			
215	CORRIDOR	CPTT-1	RB-1	P-1	P-1	P-1	P-1	CLT			
216	CONFERENCE ROOM	CPTT-6	RB-2	P-1	P-1	P-1	P-5	ACT-1	WS-1		
217	OFFICE	CPTT-1	RB-1	P-1	P-1	P1	P-1	ACT-1	WS-1	WF-1	
218	OPEN OFFICE	CPTT-1	RB-1	P-1	P-1	P-1	P-1	ACT-1			
219	OFFICE	CPTT-1	RB-1	P-1	P-1	GW	P-1	ACT-1	WS-1	WF-1	
220	OFFICE	CPTT-1	RB-1	GW	P-1	P-1	P-1	ACT-1		WF-1	
221	WAITING AREA	CPTT-2	RB	P-1	P-1	-	P-1	CLT	WS-1		
222	OFFICE	CPTT-1	RB-1	P-1	P-1	P-1	GW	ACT-1		WF-1	

ROOM FINISH SCHEDULE

NO.	ROOM NAME	FLOOR	BASE	WALLS NORTH WALL	WALLS EAST WALL	WALLS SOUTH WALL	WALLS WEST WALL	CEILING MATERIAL	WINDOW SHADES	WINDOW FILM	NOTES
223	OFFICE	CPTT-1	RB-1	P-1	P-1	GW	P-1	ACT-1	WS-1	WF-1	
224	COMMISSIONER OFFICE	CPTT-1	RB-1	P-1	P-1/GW	P-1	P-1	ACT-1	WS-1	WF-1	
225	OFFICE	CPTT-1	RB-1	P-1	GW	P-1	P-1	ACT-1	WS-1	WF-1	
226	OFFICE	CPTT-1	RB-1	P-1	GW	P-1	P-1	ACT-1	WS-1	WF-1	
227	CORRIDOR	CPTT-1	RB-1	P-1	P-1/GW	P-1/GW	P-5	CLT			
228	OFFICE	CPTT-1	RB-1	P-1	P-1	P-1	P-1	ACT-1	WS-1	WF-1	
229	COPY/ FILE/ STORAGE	CPTT-1	RB-1	P-1	P-1	P-1	P-1	ACT-1			
230	OFFICE	CPTT-1	RB-1	P-1	P-1	P-1	P-1/GW	ACT-1	WS-1	WF-1	
231	OPEN CONF	CPTT-1	RB-1	P-1,5/AWP-3	P-1	GW	P-1	CLT			
232	OFFICE	CPTT-1	RB-1	P-1/GW	P-1	P-1	P-1	ACT-1	WS-1	WF-1	
233	OFFICE	CPTT-1	RB-1	GW	P-1	P-1	P-1	ACT-1	WS-1	WF-1	
234	OFFICE	CPTT-1	RB-1	GW	P-1	P-1	P-1	ACT-1	WS-1	WF-1	
235	OFFICE	CPTT-1	RB-1	GW	P-1	P-1	P-1	ACT-1	WS-1	WF-1	
236	OPEN OFFICE	CPTT-1	RB-1	P-1	P-1,5	GW	P-1	CLT/ACT-2A	WS-1		
237	CUST	CONC	RB-1	WP	WP	WP	WP	CLT			
238	ELEC	CONC	RB-1	P-1	P-1	P-1	P-1	CLT			
239	CANTEEN	LVT-1	RB-1	P-1	P-1	P-1	P-1	ACT-1	WS-1	WF-1	
240	COPY	CPTT-1	RB-1	P-1	P-1	P-1	P-1	ACT-1	WS-1	WF-1	
241	VACANT OFFICE	CPTT-1	RB-1	P-1	GW	P-1	P-1	ACT-1	WS-1	WF-1	
242	VACANT OFFICE	CPTT-1	RB-1	P-1	P-1	P-1	GW	ACT-1	WS-1	WF-1	
243	CONFERENCE ROOM	CPTT-6	RB-2	P-5	GW	P-1	P-1	WD	WS-1	WF-5	
244	OFFICE	CPTT-1	RB-1	P-1	P-1	P-1	GW	ACT-1	WS-1	WF-1	
245	HOTEL OFFICES	CPTT-1	RB-1	P-1	-	P-1	P-1	OPEN/ACT-1	WS-1		
246	OFFICE	CPTT-1	RB-1	P-1	P-1	P-1	GW	ACT-1	WS-1	WF-1	
247	CORRIDOR	CPTT-1,6	RB-1	P-1	P-1/GW	P-1	P-1/GW	WD/ACT-1			
248	OFFICE	CPTT-1	RB-1	P-1	P-1	P-1	GW	ACT-1	WS-1	WF-1	
249	VACANT OFFICE	CPTT-1	RB-1	P-1	GW	P-1	P-1	ACT-1	WS-1	WF-1	
250	OFFICE	CPTT-1	RB-1	P-1	P-1	P-1	GW	ACT-1	WS-1	WF-1	
251	OFFICE	CPTT-1	RB-1	P-1	GW	P-1	P-1	ACT-1	WS-1	WF-1	
252	OFFICE	CPTT-1	RB-1	P-1	P-1	P-1	GW	ACT-1	WS-1	WF-1	
253	OFFICE	CPTT-1	RB-1	P-1	GW	P-1	P-1	ACT-1	WS-1	WF-1	
254	OFFICE	CPTT-1	RB-1	P-1	P-1	P-1	GW	ACT-1	WS-1	WF-1	
255	OFFICE	CPTT-1	RB-1	P-1	GW	P-1	P-1	ACT-1	WS-1	WF-1	
256	VACANT NRSC	CPTT-1	RB-1	P-1	P-1	P-1	GW	ACT-1	WS-1	WF-1	
257	OFFICE	CPTT-1	RB-1	P-1	GW	P-1	P-1	ACT-1	WS-1	WF-1	
258	OFFICE	CPTT-1	RB-1	P-1	P-1	P-1	GW	ACT-1	WS-1	WF-1	
259	OFFICE	CPTT-1	RB-1	P-1	GW	P-1	P-1	ACT-1	WS-1	WF-1	
260	OFFICE	CPTT-1	RB-1	P-1	P-1	P-1	GW	ACT-1	WS-1	WF-1	
261	OPEN SEATING	CPTT-6	RB-2	P-1	-	P-1	P-1	OPEN/WD	WS-1		
262	OFFICE	CPTT-1	RB-1	P-1	P-1	P-1	GW	ACT-1	WS-1	WF-1	
263	OFFICE	CPTT-1	RB-1	P-1	GW	P-1	P-1	ACT-1	WS-1	WF-1	
264	OFFICE	CPTT-1	RB-1	P-1	P-1	P-1	GW	ACT-1	WS-1	WF-1	
265	OFFICE	CPTT-1	RB-1	P-1	GW	P-1	P-1	ACT-1	WS-1	WF-1	
266	OFFICE	CPTT-1	RB-1	P-1	P-1	P-1	GW	ACT-1	WS-1	WF-1	
267	OFFICE	CPTT-1	RB-1	P-1	GW	P-1	P-1	ACT-1	WS-1	WF-1	
268	OFFICE	CPTT-1	RB-1	P-1	P-1	P-1	GW	ACT-1	WS-1	WF-1	
269	OFFICE	CPTT-1	RB-1	P-1	GW	P-1	P-1	ACT-1	WS-1	WF-1	
270	DATA	CONC	RB-1	P-1	P-1	P-1	P-1				
271	CORRIDOR	LVT-1	RB-1	P-7	P-7	P-7	P-7	CLT			
272	TOILET	EP-2	EP-2	P-3	P-3/CWT-1,2	P-3/CWT-1,2	P-3	GYP P-4		WF-1	PROVIDE WINDOW FILM ON EXTERIOR WINDOW
273	STOREHOUSE/ UNIFORMS	CONC	RB-1	P-7	P-7	P-7	P-7	CLT	WS-1		
274	DRESSING	LVT-1	RB-1	P-7	P-7	P-7	P-7	ACT-1			
275	I&E SECURE STORAGE	CONC	RB-1	P-1	P-1	P-1	P-1	CLT			
276	TOILET	EP-2	EP-2	P-3	P-3/CWT-1,2	P-3/CWT-1,2	P-3	GYP P-4		WF-1	PROVIDE WINDOW FILM ON EXTERIOR WINDOW
277	I&E/LICENSING HEATED STORAGE	CONC	RB-1	P-1	P-1	P-1	P-1	CLT	WS-1		
278	TOILET	EP-2	EP-2	P-3	P-3	P-3/CWT-1,2	P-3/CWT-1,2	GYP P-4			
279	RECEIVING	CONC	RB	P-7/WP	P-7	P-7	P-7	CLT	WS-1		
280	TOILET	EP-2	EP-2	P-3	P-3	P-3/CWT-1,2	P-3/CWT-1,2	GYP P-4			
281	SECURE FIREARM STORAGE	CONC	RB-1	P-7	P-7	P-7	P-7	CLT			
300	CORRIDOR	CPTT-1,7	RB-1	P-1	P-1/GW	P-1	P-1/GW	ACT-1/CLT			
301	TOILET	EP-2	EP-2	P-3/CWT-1,2	P-3/CWT-1,2	P-3	P-3	GYP P-4			
302	CUST	CONC	RB-1	WP	WP	WP	WP	CLT			
303	ELEC	CONC	RB-1	P-1	P-1	P-1	P-1	CLT			
304	TOILET	EP-2	EP-2	P-3	P-3/CWT-1,2	P-3/CWT-1,2	P-3	GYP/P-4			
305	CANTEEN	LVT-1	RB-1	P-1	P-1	P-1	P-1	ACT-1	WS-1	WF-1	
306	PLAN ROOM/PLOTTER	CPTT-1	RB-1	P-1	P-1	P-1	P-1	ACT-1	WS-1	WF-1	
307	COPY	CPTT-1	RB-1	P-1	P-1	P-1	P-1	ACT-1	WS-1	WF-1	
308	VACANT OFFICE	CPTT-1	RB-1	P-1	P-1	P-1	GW	ACT-1	WS-1	WF-1	
309	TELECON	CPTT-7	RB-1	P-6	GW	P-1	P-1	WD	WS-1	WF-4	
310	SEASONAL OFFICES	CPTT-1	RB-1	P-1	P-1	P-1	-	ACT-1	WS-1		
311	OPEN OFFICE	CPTT-1	RB-1	P-1	-	P-1	P-1	ACT-1	WS-1		
312	OFFICE	CPTT-1	RB-1	P-1	P-1	P-1	GW	ACT-1	WS-1	WF-1	
313	OFFICE	CPTT-1	RB-1	P-1	GW	P-1	P-1	ACT-1	WS-1	WF-1	
314	OFFICE	CPTT-1	RB-1	P-1	P-1	P-1	GW	ACT-1	WS-1	WF-1	
315	OFFICE	CPTT-1	RB-1	P-1	GW	P-1	P-1	ACT-1	WS-1	WF-1	
316	VACANT OFFICE	CPTT-1	RB-1	P-1	P-1	P-1	GW	ACT-1	WS-1	WF-1	
317	OFFICE	CPTT-1	RB-1	P-1	GW	P-1	P-1	ACT-1	WS-1	WF-1	
318	OFFICE	CPTT-1	RB-1	P-1	P-1	P-1	GW	ACT-1	WS-1	WF-1	
319	OFFICE	CPTT-1	RB-1	P-1	GW	P-1	P-1	ACT-1	WS-1	WF-1	
320	OFFICE	CPTT-1	RB-1	P-1	P-1	P-1	GW	ACT-1	WS-1	WF-1	
321	OPEN	CPTT-7	RB-1	P-1	GW	P-1	P-1	ACT-1	WS-1	WF-1	
322	VACANT OFFICE	CPTT-1	RB-1	P-1	P-1	P-1	GW	ACT-1	WS-1	WF-1	
323	FUTURE OFFICE	CPTT-7	RB-1	P-1	GW	P-1	P-1	ACT-1	WS-1	WF-1	
324	OFFICE	CPTT-1	RB-1	P-1	P-1	P-1	GW	ACT-1	WS-1	WF-1	
325	VACANT OFFICE	CPTT-1	RB-1	P-1	GW	P-1	P-1	ACT-1	WS-1	WF-1	
326	OFFICE	CPTT-1	RB-1	P-1	P-1	P-1	GW	ACT-1	WS-1	WF-1	
327	OFFICE	CPTT-1	RB-1	P-1	GW	P-1	P-1	ACT-1	WS-1	WF-1	
328	OFFICE	CPTT-1	RB-1	P-1	P-1	P-1	GW	ACT-1	WS-1	WF-1	
330	DATA	CONC	RB-1	P-1	P-1	P-1	P-1	-			
401	ATTIC	-	-	-	-	-	-	-			
E1	ELEV	CPTT-1	-	-	-	-	-	-			
E1A	MACH ROOM	-	-	-	-	-	-	-			
E2	ELEV	LVT-1	-	-	-	-	-	-			
E2A	MACH ROOM	-	-	-	-	-	-	-			
M1	MECH	-	-	-	-	-	-	-			
M2	MECH ATTIC	-	-	-	-	-	-	-			
S1	STAIR	WM-1/RUB	RB-1	P-7	P-7	P-7	P-7	CLT			
S2	STAIR	WM-1/RUB	RB-1	P-7	P-7	P-7	P-7	CLT			
S3	STAIR	WM-1/RUB	RB-1	P-7	P-7	P-7	P-7	CLT			

GENERAL NOTES:

1. SEE SHEETS AE701-AE704 FOR CEILING HEIGHTS.
2. EPW LOCATIONS REQUIRE LEVEL 4/5 FINISH FOR GLASS-MAT, WATER-RESISTANT BACKING BOARD.

NOTES:

1. EAST AND WEST WALLS AWP-1. SEE AE402.
2. PROVIDE LEVEL 5 FINISH FOR WALL LOCATIONS RECEIVING WALL COVERING.
3. PROVIDE LEVEL 4/5 FINISH FOR WALL LOCATIONS RECEIVING EPOXY PAINT.
4. ACT-1 UNDERSIDE OF BRIDGE.

NO.	DATE	DESCRIPTION	BY
1	02/13/2025	ADDENDUM NO.1	HMG

REVISIONS

LICENSED ARCHITECT TYLER A. BARTER ARC 2962 STATE OF MAINE 1-29-25

DRAWN BY: Author
CHECK BY: Designer
NO.
DATE 01/29/2025

DEPARTMENT OF INLAND FISHERIES & WILDLIFE

TITLE: NEW OFFICE HEADQUARTERS

LOCATION: AUGUSTA, ME

TITLE THIS DWG: ROOM FINISH SCHEDULE

OAK POINT ASSOCIATES
231 Main Street, Biddeford, Maine 04005 207.283.0193

DRAWING NO. AE640

SHEET NO. 152 OF 239

2/19/2025 10:52:35 AM
C:\Users\HeidiI\Documents\22205.04-IF&W-ARCH_v22_hgardnerYBPQX.rvt

COLOR KEY/MANUFACTURER GUIDE

MATERIAL	LOCATIONS	MANUFACTURER MODEL/TYPE	COLOR & FINISH
WALLS			
P-1	GENERAL	BENJAMIN MOORE	TO BE SELECTED
P-2	ACCENT 100,112,127,135, 152	BENJAMIN MOORE	TO BE SELECTED
P-3	TOILET ROOMS, 103	BENJAMIN MOORE	TO BE SELECTED
P-4	GYP CEILINGS	BENJAMIN MOORE	TO BE SELECTED
P-5	208, 216, 231, 236	BENJAMIN MOORE	TO BE SELECTED
P-6	309, 310	BENJAMIN MOORE	TO BE SELECTED
P-7	159,164-171,271,273,274,279, 281, STAIR TOWERS	BENJAMIN MOORE SCRUFF-X	TO BE SELECTED
P-8	DUCTS, CONDUITS AND PIPING	BENJAMIN MOORE	TO BE SELECTED
P-9	ACCENT	BENJAMIN MOORE	TO BE SELECTED
CWT-1	TOILET ROOMS	CROSSVILLE, HANDWRITTEN 3X12	PRIVATE AFFAIR
CWT-2	TOILET ROOMS	PLATFORM/SURFACES, KIT-KATS	WEAR GLOSSY
WP	CUSTODIAL ROOMS, 279	ALTRO PURAGUARD	TO BE SELECTED
AWP-1	100, 200	CONWED WALL PANEL, PAINT, IR	TO BE SELECTED
AWP-2	101A,101B,101C,109,112	CONWED FABRIC-A, DUVALTEX RESOLVE FABRIC	TO BE SELECTED
AWP-3	112,127,137, 221,231	TAKEFORM OOMPH SHAPES, SH-11 MARQUISE	TO BE SELECTED
EPW	161	DUR-A-FLEX EPOXY WALLS	TO BE SELECTED
WPS	100	TERRAMAI 3D STICK MODULAR PANELS	WHITE OAK
GW	GLASS WALL PARTITIONS	METROWALL HUSH SERIES	TO BE SELECTED
FLOORS			
LVT-1	03,122,133,135,159,167A, 211,239,271,274,305	INTERFACE LEVEL SET, A004	A00416 ANTIQUE DARK OAK
EP-1	161,164,165,166,167,168,169,170,171	DUR-A-FLEX ACCELERA HQ MICRO CHIP	Q28-21
EP-2	101,106,107,108,120,121,163,202,203,204, 205,212,213,272,276,278,280,302,304	DUR-A-FLEX ACCELERA HC CLAYSTONE DESIGNER BLEND	ENFIELD
RUB	ALL STAIR TOWERS AND LANDINGS,200,300	ROPPE RENEW RUBBER TREADS AND LANDINGS	R123 CHARCOAL
WM-1	S1,S2,S3 FIRST FLOOR,100A,100B,200,201A	MILLIKEN OBEX TILE CUTX	TO BE SELECTED
WM-2	100A,100B	MILLIKEN OBEX GRID CUTX CLOSED	TO BE SELECTED
CPTT-1	GENERAL USE	INTERFACE WOVEN GRADIENCE WG200,	ASH/GREIGE 107664
CPTT-2	102A,102B,102C	INTERFACE WOVEN GRADIENCE WG100	PINE 108058
CPTT-3	102A,102B,102C	INTERFACE WOVEN GRADIENCE WG200	ONYX/PINE 107672
CPTT-4	118,137,152	INTERFACE URBAN RETREAT UR101	ASH/IVY 103508
CPTT-5	118,137,152	INTERFACE URBAN RETREAT UR103	IVY 100639
CPTT-6	208,216,221,231,243,247,261	INTERFACE NET EFFECT B602	PACIFIC
CPTT-7	300,309,321,323	INTERFACE GRANITE MOUNTAIN, BRIDGE CREEK	MINERAL EDGE
PT-1	100	CROSSVILLE OWEN STONE 24X48	SABLE
PT-2	100A,100B,101,104,106,107,108	CROSSVILLE OWEN STONE 12X24	SABLE
CONC	105,130,131,152,158,160,166,214,237,238,270,273,275,277,279,281,302,303,330		
BASE			
RB-1	GENERAL USE	ROPPE, PINNACLE	TO BE SELECTED
RB-2		ROPPE, PINNACLE	TO BE SELECTED
EP-1	161,164,165,166,167,168,169,170	DUR-A-FLEX ACCELERA HQ MICRO CHIP	TO BE SELECTED
EP-2	TOILET ROOMS (TANKED BASE)	DUR-A-FLEX ACCELERA HC CLAYSTONE DESIGNER BLEND	ENFIELD
WB	102A, 102B, 102C	MILLWORK WOOD BASE	TO BE SELECTED
PB	100, 101, 104, 106-108	CROSSVILLE OWEN STONE	SABLE
CEILINGS			
ACT-1	GENERAL USE	ARMSTRONG CALLA 24X24	WHITE
ACT-2A	118,127	CONWED CLOUD/PAINT/A, 3' X 6'	WHITE
ACT-2B	109, 110, 111, 111A, 112	CONWED CLOUD/PAINT/A, 3' X 6'	WHITE
WD	135,137,152,243,247,261,300,309	ARMSTRONG WOODWORKS LINEAR SOLID PANEL	GGM GOLDEN MAPLE
CLT	EXPOSED WOOD CEILINGS	TO BE SELECTED	TO BE SELECTED
MISCELLANEOUS			
SS-1	COUNTERTOPS-CANTEENS & BREAKROOMS	FORMICA EVERFORM	758 BIANCO MINERAL
SS-2	WINDOW SILLS	FORMICA EVERFORM	TO BE SELECTED
MW	102A,102B,102C	MODERNFOLD SKYFOLD ZENITH	TO BE SELECTED
PLAM-1		WILSONART TRACELESS ULTRA MATTE	15518 SPRUCE VELVET
PLAM-2		WILSONART TRACELESS ULTRA MATTE	15515 NILE VELVET
PLAM-3		WILSONART TRACELESS ULTRA MATTE	1504 CHARCOAL VELVET
PLAM-4	102C	WILSONART SOFT GRAIN FINISH	7981K LANDMRK WOOD
PLAM-5	161,167,168,169,170, NECROPSY LAB	WILSONART CHEM SURFACE	TO BE SELECTED
EPOXY RESIN	167	DIVERSIFIED WOODCRAFTS, EPOXY RESIN COUNTERTOPS	GRAY
CHEMGUARD	NECROPSY LAB	DIVERSIFIED WOODCRAFTS, CHEMGUARD WITH 3MM PVC...	BLACK GRAY
WS-1	GENERAL USE	URBAN SHADE MECHOSHADE 1% OPENNESS, MANUAL	TO BE SELECTED
WS-2	102A,102B,102C	URBAN SHADE MECHOSHADE, ELECTRIC, DUAL	TO BE SELECTED
CG-1	CORNER GUARD	INPRO BIOBLEND G2 160R HIGH IMPACT CORNER GUARD	TO BE SELECTED
CG-2	CORNER GUARD	INPRO STAINLESS STEEL CORNER GUARD 2" WING	TO BE SELECTED
DR	DECORATIVE RAILING	HDI RAILING SYSTEMS, CIRCUM	STAINLESS STEEL
WF-1	INTERIOR GLASS PARTITION FILMS	TAKEFORM GHOST	PATTERNS TO BE SELECTED
WF-2-5	CONFERENCE ROOM FILMS	TAKEFORM CLARITY	PATTERNS TO BE SELECTED
WC	LOBBY	TAKEFORM TRAFFIC	PATTERNS TO BE SELECTED

ROOM FINISH SCHEDULE ABBREVIATIONS:

WALLS:
AWP = ACOUSTIC WALL PANEL
CWT = CERAMIC WALL TILE
EPW = EPOXY PAINTED WALLS
GW = GLASS WALLS
P = PAINT
WP = WALL PANEL
WPS = WOOD PANEL SYSTEM

FLOORS:
CONC = SEALED CONCRETE
CPTT = CARPET TILE
EP = EPOXY
LVT = LUXURY VINYL TILE
PT = PORCELAIN TILE
RUB = RUBBER
WM = WALK-OFF MAT

BASE;
EP = EPOXY BASE
RB = RUBBER BASE

CEILING:
ACT = ACOUSTIC CEILING TILE
CLT = CROSS LAMINATED TIMBER
WD = WOOD CEILING

MISCELLANEOUS:
CG = CORNER GUARD
PLAM = PLASTIC LAMINATE
MW = MOVEABLE WALL
SS = SOLID SURFACE
WS = WINDOW SHADE
DR = DECORATIVE RAILING
WF = WINDOW FILM
WC = WALLCOVERING

NO.	DATE	DESCRIPTION	BY
1	02/13/2025	ADDENDUM NO.1	HMG
		REVISIONS	

LICENSED ARCHITECT TYLER B. FOSS 4102-2362 STATE OF MAINE 1-29-25

DRAWN BY: Author
CHECK BY: Designer
NO.
DATE 01/29/2025

DEPARTMENT OF INLAND FISHERIES & WILDLIFE

TITLE: NEW OFFICE HEADQUARTERS
LOCATION: AUGUSTA, ME
TITLE THIS DWG.: ROOM FINISH SCHEDULE AND COLOR KEY

OAK POINT ASSOCIATES
ARCHITECTS • PLANNERS • INTERIOR DESIGNERS
231 Main Street, Biddeford, Maine 04005 207.283.0193

DRAWING NO. AE641
SHEET NO. 153 OF 239

2/19/2025 10:24:41 AM
C:\Users\Revit\Documents\22205.04-IF&W-ARCH_v22_hgardnerYBPQX.rvt