FOR PERMIT

BULL HILL WIND PROJECT
BLUE SKY EAST, LLC

T16 MD, HANCOCK COUNTY, MAINE

74490E

NOVEMBER 24, 2010

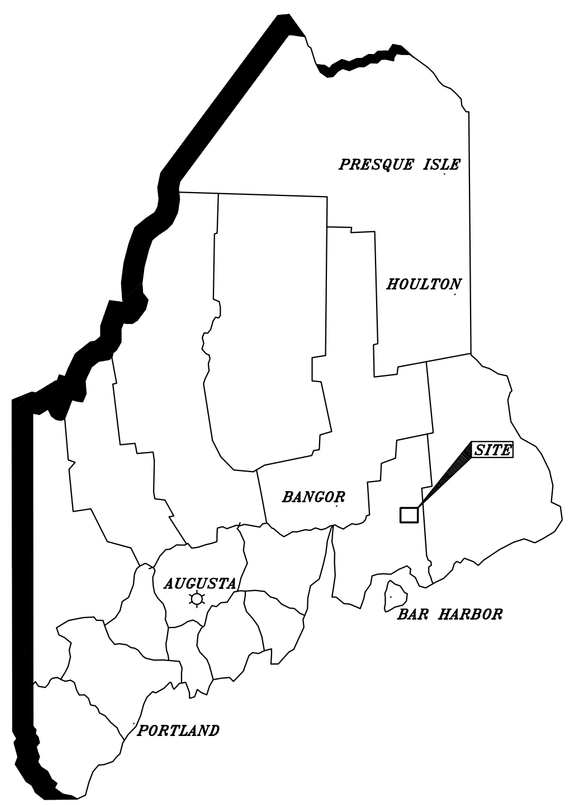

LOCUS MAP

INDEX

SHEET NO.	DESCRIPTION
	COVER
C-1	INDEX SHEET-PROJECT OVERVIEW
C-2	SUBSTATION - O&M BUILDING
C-3	DETAILS
C-4	DETAILS
C-100 - 106	PLAN AND PROFILE SOUTHERN CRANE PATH T1-T9
C-200 - 203	PLAN AND PROFILE NORTHERN CRANE PATH T10-T19
C-300 - 301	PLAN AND PROFILE MET TOWER LOCATIONS
C-400	ACCESS ROAD IMPROVEMENT INDEX
C-500	ACCESS ROAD HORIZONTAL IMPROVEMENTS
C-600	STORMWATER INDEX
C-601-609	STORMWATER PLANS
C701	PRE DEVELOPMENT DRAINAGE PLANS
C702	POST DEVELOPMENT DRAINAGE PLANS

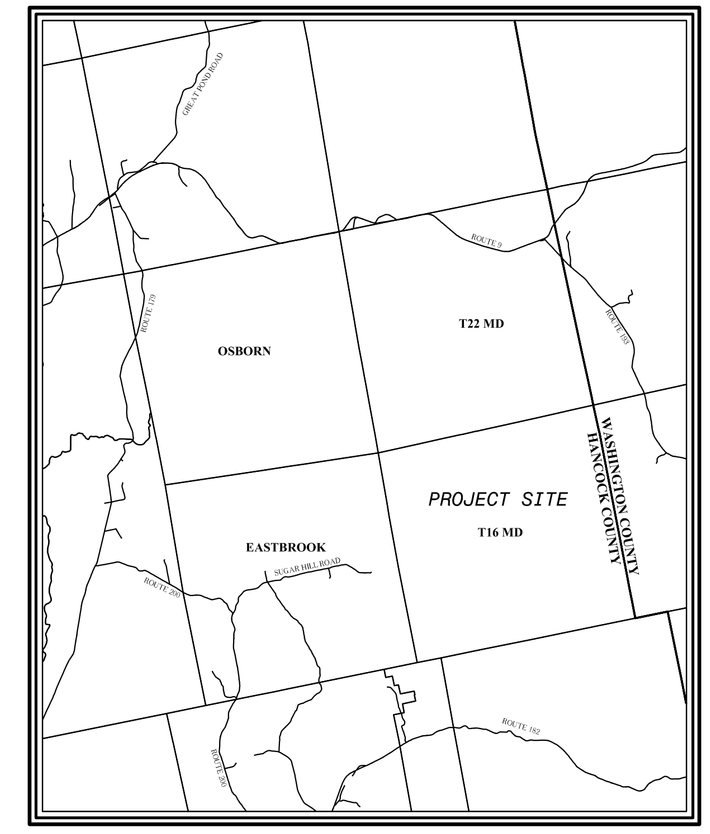

VICINITY MAP

DESIGN TEAM:

SEWALL
JAMES W. SEWALL COMPANY / Since 1880
SEWALL.COM 800 648 4202

SEAL

STATE OF MAINE
JOHN M. THERIAULT
No. 9687
LICENSED
PROFESSIONAL ENGINEER

1/25/11

SITE PLAN NOTES:

PLAN REFERENCES:

- TOPOGRAPHY FOR THIS PROJECT WAS DEVELOPED FROM AERIAL MAPPING PROVIDED BY AERIAL SURVEY & PHOTO OF NORRIDGEWOCK, MAINE WITH VERTICAL DATUM N.A.V.D. 1988 AND HORIZONTAL DATUM OF UTM ZONE 19, N.A.D. 83 (FEET). GROUND CONTROL WAS COMPLETED BY PLISGA & DAY OF BANGOR, MAINE.
- NATURAL RESOURCE MAPPING WAS PROVIDED BY STANTEC.
- ELECTRICAL INFRASTRUCTURE INFORMATION PROVIDED BY RLC ENGINEERING.
- SEWALL ACCEPTS NO RESPONSIBILITY AS TO THE ACCURACY OF THE AFOREMENTIONED INFORMATION.

Rev. #	Dwg. By	Description	Date
1	MT	REVISED PER LURC COMMENTS DATED 01/18/11	1/25/11

BULL HILL WIND PROJECT

Project Location: T16MD

Drawing Description: **SHEET INDEX**

Designed By: JMT | Drawn By: JLD | Date: 11/24/10 | Scale: 1"=750' | Approved: - | Checked: BCH

Seal: STATE OF MAINE JOHN M. THERIAULT LICENSED PROFESSIONAL ENGINEER 1/25/11

Project No. 74490E

Engineer: SEWALL — AN INTEGRATED TEAM OF GEOSPATIAL ENGINEERING, SURVEYING AND NATURAL RESOURCE CONSULTANTS — JAMES W. SEWALL COMPANY / Since 1880 — SEWALL.COM — 800 648 4202

Phase: PERMIT

Sheet No. C-1

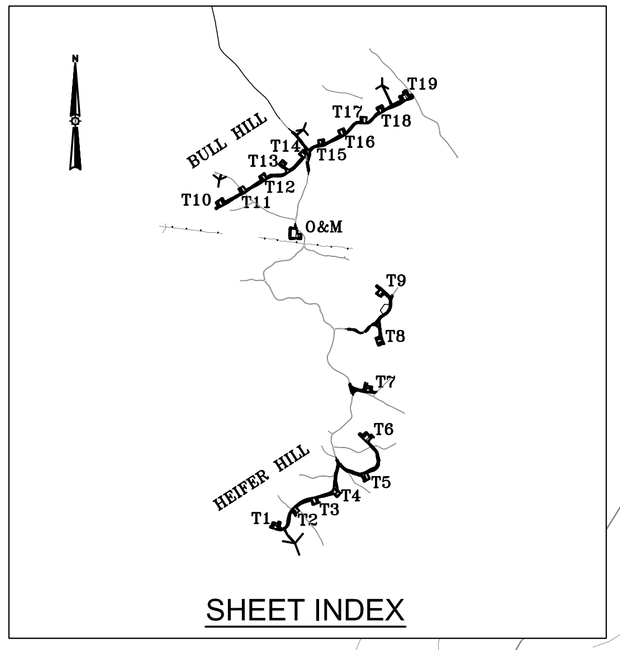

SHEET INDEX

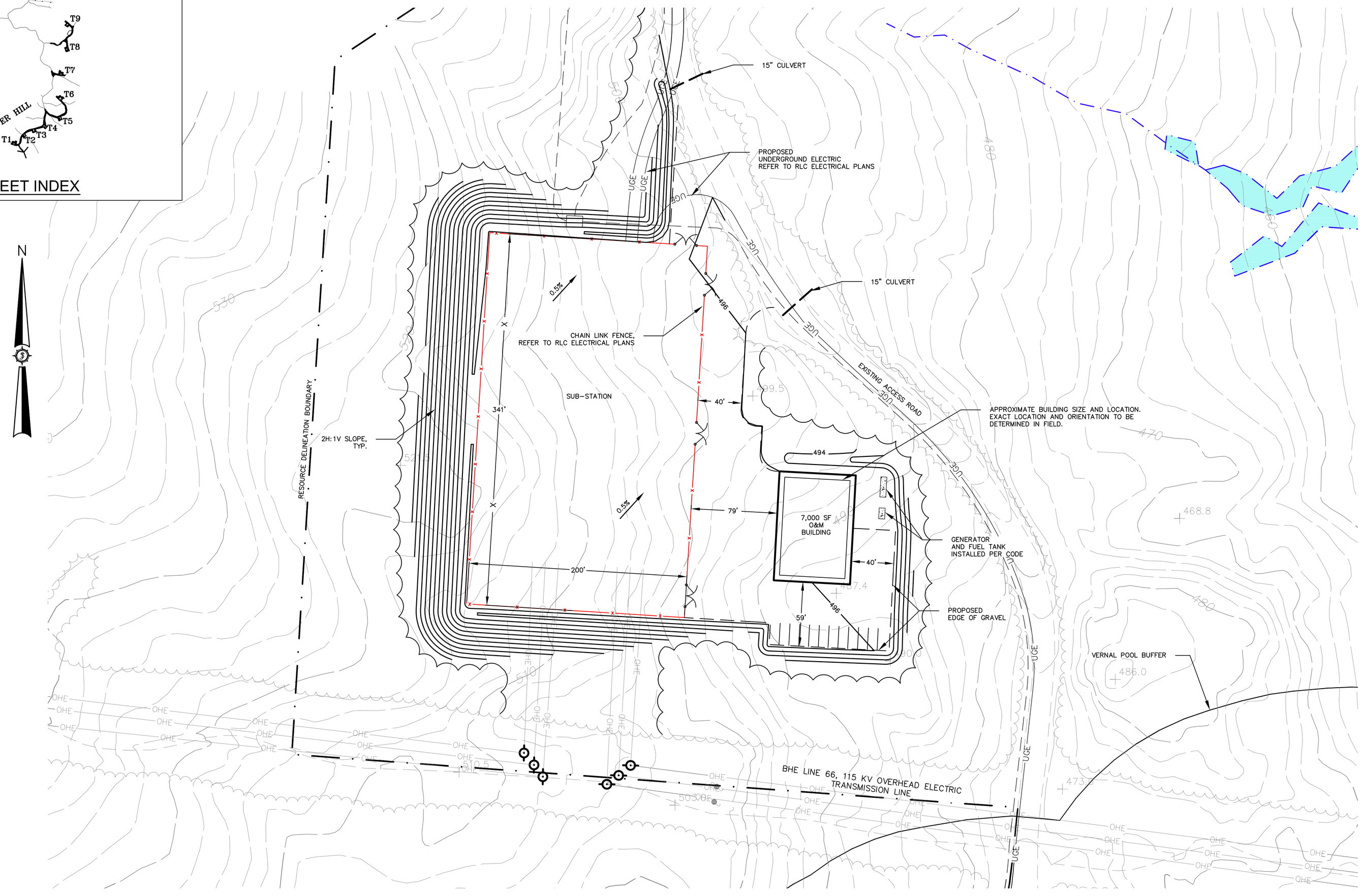

SUB STATION AND O&M BUILDING

GRAPHIC SCALE

50 0 25 50 100 200

(IN FEET)
1 inch = 50 ft.

Rev. #	Dwg. By	Description	Date
1	MT	REVISED PER LURC COMMENTS DATED 01/18/11	1/25/11

BULL HILL WIND PROJECT

Project Location: T16MD

Drawing Description: SUBSTATION AND O&M LAYOUT

Designed By: JMT
Date: 11/24/10
Scale: H: 1"=50'
Drawn By: JLD
Approved: -
Checked: BCH

Seal: STATE OF MAINE JOHN M. THERIAULT LICENSED PROFESSIONAL ENGINEER 1/25/11

Project No. 74490E

Engineer: SEWALL
AN INTEGRATED TEAM OF GEOSPATIAL ENGINEERING, SURVEYING AND NATURAL RESOURCE CONSULTANTS
JAMES W. SEWALL COMPANY Since 1880
SEWALL.COM 800 648 4202

Phase: PERMIT

Sheet No. C-2

GENERAL NOTES & CONSTRUCTION SPECIFICATIONS

1. FINAL STABILIZATION WILL BE DONE WITHIN 7 DAYS OF FINAL GRADING OR WITHIN 30 DAYS OF INITIAL SOIL DISTURBANCE.
2. EVERY WEEK AND AFTER PRECIPITATION PRODUCING THE EQUIVALENT OF ONE-HALF INCH OF RAINFALL, THE CONTRACTOR SHALL INSPECT AND MAINTAIN ALL EROSION CONTROL MEASURES. MAINTENANCE SHALL INCLUDE, BUT NOT BE LIMITED TO, REMOVAL OF SEDIMENT FROM SILT FENCES IF SOIL ACCUMULATES TO A DEPTH OF ONE-HALF THE FABRIC HEIGHT AND REMOVAL OF EXCESS ACCUMULATED SEDIMENT FROM DETENTION BASINS (IF APPLICABLE).
3. ALL EROSION CONTROL MEASURES SHALL BE CONSTRUCTED AND MAINTAINED IN ACCORDANCE WITH "MAINE EROSION & SEDIMENT CONTROL: BEST MANAGEMENT PRACTICES," BY MAINE DEPARTMENT OF ENVIRONMENTAL PROTECTION, MARCH 2003.
4. THE CONTRACTOR SHALL BE RESPONSIBLE FOR ALL EROSION CONTROL MEASURES, INCLUDING MATERIALS, CONSTRUCTION, MAINTENANCE AND REMOVAL.
5. SEE DETAILS FOR SLOPE STABILIZATION OPTIONS.

CONSTRUCTION SEQUENCE & PHASING NOTES

CLEARING OF VEGETATION AND STOCKPILING OF TOPSOIL

1. INSTALL EROSION CONTROL MEASURES PRIOR TO SOIL DISTURBANCE.
2. FLAG & MARK CLEARING LIMITS OF ACCESS ROADS, CRANE PATHS, & COLLECTION LINES, WITH THE OTHER CONSTRUCTION AREAS TO FOLLOW.
3. STUMPS TO BE REMOVED FROM LOCATIONS WHERE STRUCTURES (i.e., TURBINES, SUBSTATION, O&M BUILDING, STORMWATER MANAGEMENT SYSTEMS) ARE TO BE INSTALLED/CONSTRUCTED. STUMPS TO BE GROUND ON-SITE BY THE ROAD CONTRACTOR & USED AS AN EPSC MEASURE.
4. LOW GROWING VEGETATION TO REMAIN, WHERE FEASIBLE TO PROVIDE SOIL STABILITY.
5. EXISTING TOPSOIL IN AREAS OF DEVELOPMENT TO BE STOCKPILED ON-SITE FOR USE IN FINAL STABILIZATION OF ROAD SHOULDERS, TURBINE CLEARINGS AND LAY DOWN AREAS.
6. MULTIPLE LAYERS OF PROTECTION INCLUDING SILT FENCE AND EROSION CONTROL MIX BERM SHALL BE INSTALLED AROUND TOPSOIL STOCKPILE TO PROTECT DOWN STREAM RESOURCES. CONTRACTOR SHALL INSTALL ALL CONTROL MEASURES AS DIRECTED BY ENGINEER AT STOCKPILE LOCATIONS.

CONSTRUCTION OF ACCESS ROADS, CRANE PATHS, & LAY DOWN/STAGING AREAS

1. 24-FT WIDE ACCESS ROADS & 36-FT WIDE CRANE PATHS TO BE CONSTRUCTED AS DEPICTED HEREIN.
2. SURVEY CREWS TO STAKE THE ROADWAY CLEARING LIMITS BOUNDARIES & CENTERLINE TO GUIDE OPERATORS. PROVIDE ADDITIONAL STAKING & MARKING AT LOCATIONS WHERE STORMWATER CONTROL MEASURES WILL BE INSTALLED AS NECESSARY.
3. MINOR GRADE AND HORIZONTAL ADJUSTMENTS MAY BE NECESSARY, DEPENDING ON FIELD CONDITIONS. ALL ADJUSTMENTS TO BE APPROVED BY ENGINEER.
4. CONSTRUCTION OF ACCESS ROADS, CRANE PATHS, & LAY DOWN/STAGING AREAS WILL OCCUR IN PHASES, MINIMIZING AREAS OF EXPOSED SOIL AT ANY ONE TIME (INCLUSIVE OF ANY OTHER EXPOSED SOIL AREAS WITHIN THE DESIGNATED LIMITS OF DISTURBANCE).

CONSTRUCTION OF PERMANENT STORMWATER MANAGEMENT SYSTEMS

1. GRADING TO BE CONDUCTED IN ACCORDANCE WTH PERMITTED PERMANENT STORMWATER MANAGEMENT DESIGN.
2. ONCE FINAL GRADES ARE ACHIEVED, EXPOSED SOIL SURROUNDING THE STORMWATER MANAGEMENT STRUCTURES TO BE PERMANENTLY STABILIZED.

CONSTRUCTION OF CRANE PADS

1. AFTER THE SUBGRADE IS ESTABLISHED, CRANE PAD TO BE CONSTRUCTED WITH CRUSHED AGGREGATE SPREAD & COMPACTED OVER A GEOTEXTILE LINER AS NECESSARY; MINOR GRADE ADJUSTMENTS MAY NEED TO OCCUR DEPENDENT ON FIELD CONDITIONS. ADJUSTMENTS TO BE APPROVED BY ENGINEER.
2. CRANE PADS TO REMAIN IN PLACE FOR FUTURE MAINTENANCE & OPERATION.
3. ALL EXPOSED SOIL SURROUNDING CRANE PADS & TURBINE FOUNDATIONS TO BE STABILIZED.

CLEAN-UP & FINAL STABILIZATION

1. UPON COMPLETION OF CONSTRUCTION ACTIVITIES, ALL WORK AREAS TO BE CLEARED OF CONSTRUCTION DEBRIS & OTHER MATERIALS.
2. SPECIFIC CLEAN-UP REQUIREMENTS TO INVOLVE: REMOVAL OF ALL TEMPORARY WORK TRAILERS; REMOVAL OF MATERIAL & EQUIPMENT; DISPOSAL OF ALL RUBBISH RESULTING FROM CLEARING, CONSTRUCTION, & INSTALLATION; ROUGH GRADING & STABILIZATION OF EMBANKMENTS MADE FOR CONSTRUCTION PURPOSES; FILLING OF ANY EXCAVATIONS; & REPAIRING RUTS IN ACCESS ROADS.
3. FINAL STABILIZATION OF ALL AREAS OF DISTURBED SOIL, WHERE FINAL GRADE HAS BEEN ACHIEVED, INVOLVE RESPREADING OF STOCKPILED TOPSOIL MATERAL & SEEDING, MULCHING WITH WOODWASTE MULCH, OR APPLICATION OF OTHER APPROVED STABILIZATION METHODS. ALL WORK TO BE PERFORMED IN ACCORDANCE WITH THE PROJECTS PERMITS.

WINTER CONSTRUCTION NOTES

1. THE WINTER CONSTRUCTION PERIOD SHALL BE FROM NOVEMBER 1 THROUGH APRIL 15.
2. WHERE FEASIBLE, A MINIMUM 25-FT BUFFER SHALL BE MAINTAINED BETWEEN SILT FENCE OR OTHER PERIMETER CONTROLS AND ROADS TO ALLOW FOR SNOW CLEARING AND MAINTENANCE.
3. WIRE REINFORCED SILT FENCE SHALL BE UTILIZED IN ALL AREAS (SEE DETAILS).
4. DRAINAGE STRUCTURES SHALL BE KEPT OPEN AND FREE OF SNOW AND ICE DAMS.
5. ACCEPTABLE OVER-WINTER STABILIZATION SHALL CONSIST OF VEGETATION (MIN. 75% MATURE), MULCHING, EROSION CONTROL MIX, EROSION CONTROL MATS, RIPRAP OR GRAVEL ROAD BASE.
6. EROSION PREVENTION AND SEDIMENT CONTROL MEASURES THAT REQUIRE EARTH DISTURBANCE (e.g., CONSTRUCTION FENCE AND SILT FENCE) SHALL BE INSTALLED PRIOR TO THE GROUND FREEZING. DURING FROZEN CONDITIONS, SEDIMENT BARRIERS MAY CONSIST OF EROSION CONTROL MIX BERMS.
7. FROM NOVEMBER 1 TO APRIL 15, MULCH SHALL BE INSTALLED AT DOUBLE THE NORMAL RATE. NETTING OR OTHER MEANS APPROVED BY THE ENGINEER SHALL BE USED TO MINIMIZE WIND EROSION OF MULCHING.
8. PRIOR TO STABILIZATION, ICE AND SNOW SHALL BE REMOVED TO LESS THAN 1-IN.
9. IF VEHICLE TRAFFIC IS ANTICIPATED AROUND STRUCTURES UNDER CONSTRUCTION, THE AREA SHALL BE STABILIZED WITH STONE.
10. EXCAVATED FROZEN SOILS SHALL BE STOCKPILED IN LEVEL AREAS AND SHALL NOT BE USED UNTIL THAWED. STOCKPILES SHALL BE ENCIRCLED WITH EROSION CONTROL MIX BERMS AS NECESSARY.
11. EXCAVATION OF SOILS IN SHALLOW GROUNDWATER AREAS SHALL BE MINIMIZED IF AT ALL POSSIBLE DURING WINTER, AND LIMITED TO ONLY THOSE AREAS THAT CAN BE STABILIZED DURING THE SAME DAY.
12. TO ENSURE COVER OF DISTURBED SOIL IN ADVANCE OF A MELT EVENT, AREAS OF DISTURBED SOIL MUST BE STABILIZED AT THE END OF EACH WORK DAY, WITH THE FOLLOWING EXCEPTIONS:
    A. IF NO PRECIPITATION IS FORECAST WITHIN 24 HOURS AND WORK WILL RESUME IN THE SAME DISTURBED AREA WITHIN 24 HOURS, DAILY STABILIZATION IS NOT NECESSARY.
    B. DISTURBED AREAS THAT COLLECT AND RETAIN RUNOFF, SUCH AS BUILDING FOUNDATIONS AND OPEN UTILITY TRENCHES.
14. THE ENGINEER MAY MAKE NECESSARY ADJUSTMENTS TO THE EROSION PREVENTION AND SEDIMENT CONTROL PLAN AND ASSOCIATED EROSION PREVENTION AND SEDIMENT CONTROL MEASURES (e.g., CONSTRUCTION FENCE AND SILT FENCE) TO ACCOMMODATE ANTICIPATED SNOW STORAGE AREAS.
15. AREAS WITHIN 100 FEET FROM ANY NATURAL RESOURCE, IF NOT STABILIZED WITH A MINIMUM OF 75% MATURE VEGETATION, SHALL BE MULCHED BY DECEMBER 1 AND ANCHORED WITH PLASTIC NETTING OR PROTECTED WITH EROSION CONTROL COVER. DURING WINTER CONSTRUCTION A DOUBLE ROW OF SEDIMENT BARRIERS SHALL BE PLACED BETWEEN ANY NATURAL RESOURCE AND THE DISTURBED AREA. NATURAL RESOURCE CROSSINGS SHALL BE PROTECTED A MINIMUM DISTANCE OF 100 FEET ON EITHER SIDE FROM THE RESOURCE.
16. STOCKPILES OF SOIL SHALL BE MULCHED FOR OVER-WINTER PROTECTION WITH HAY OR STRAW AT TWICE THE NORMAL RATE OR WITH A 4-INCH LAYER OF EROSION CONTROL MIX.
17. MAINTENANCE MEASURES SHALL BE APPLIED AS NEEDED DURING THE ENTIRE CONSTRUCTION SEASON. AFTER EACH RAINFALL, SNOW STORM OR PERIOD OF THAWING AND RUNOFF, THE SITE CONTRACTOR SHALL PERFORM A VISUAL INSPECTION OF ALL INSTALLED EROSION CONTROL MEASURES AND PERFORM REPAIRS AS NEEDED. FOLLOWING THE TEMPORARY AND/OR FINAL SEEDING AND MULCHING, THE CONTRACTOR SHALL, IN THE SPRING, INSPECT AND REPAIR ANY DAMAGES OR BARE SPOTS.
18. WINTER CONSTRUCTION SHALL BE IN ACCORDANCE WITH REGULATORY PERMIT. PERMIT REQUIREMENTS SHALL SUPERCEDE ANY DISCREPANCY IN ABOVE LISTED NOTES.

NOTES:

TEMPORARY SEEDING NOTES

1. ANY DISTURBED AREAS TO BE LEFT IN ROUGH GRADED FORM FOR MORE THAN 30 DAYS BUT LESS THAN ONE GROWING SEASON SHALL BE LIMED, FERTILIZED, TEMPORARILY SEEDED AND MULCHED OR OTHERWISE STABILIZED.
2. APPLICATION RATES AND MATERIALS USED SHALL BE THE SAME AS FOR PERMANENT SEEDING EXCEPT SEED MIXTURE SHALL BE ANNUAL RYEGRASS.

PERMANENT SEEDING NOTES

1. DURING PERIODS FROM APRIL 15 TO OCTOBER 1, AREAS DISTURBED SHALL BE PERMANENTLY SEEDED WITH CONSERVATION SEED MIX (A MIXTURE OF CREEPING RED FESCUE, REDTOP, TALL FESCUE, CLOVER AND ANNUAL RYE), AT A RATE OF 1.0 LB/1,000 SF.

DORMANT SEEDING NOTES

1. DURING PERIODS FROM OCTOBER 1 TO NOVEMBER 15, AREAS DISTURBED SHALL BE DORMANT SEEDED WITH WINTER RYE, 5 LB/1,000 SF. DURING PERIODS BETWEEN NOVEMBER 15 AND APRIL 15, DISTURBED AREAS SHALL BE MULCHED AND IF NECESSARY, STABILIZED WITH EROSION CONTROL MESH.

SPECIFIC MAINTENANCE INSTRUCTION:

1. STRAW/HAY BALE BARRIERS, SILT FENCE, FILTER BARRIERS- MAKE ANY REQUIRED REPAIRS IMMEDIATELY. REPLACE W/ TEMPORARY CHECK DAM IF THERE IS UNDERCUTTING AT CENTER OR EDGES, OR IF LARGE VOLUMES OF WATER ARE IMPOUNDED. REPLACE DECOMPOSED OR INEFFECTIVE FABRIC IMMEDIATELY. REMOVE SEDIMENT DEPOSITS AFTER EACH STORM. DEPOSITS REMAINING IN PLACE AFTER SILT FENCE OR FILTER FABRIC IS NO LONGER REQUIRED SHALL BE DRESSED TO CONFORM W/ EXISTING GRADE, PREPARED AND STABILIZED.
2. CULVERTS - CULVERTS SHOULD BE CHECKED MONTHLY FOR ACCUMULATION OF DEBRIS. IF NEEDED THEY SHOULD BE DREDGED.
3. A STORMWATER MAINTENANCE LOG SHOULD BE MAINTAINED TO DOCUMENT COMPLIANCE WITH THE SUGGESTED SCHEDULE.

DEWATERING

1. CONTRACTOR SHALL BE AWARE THAT A HIGH WATER TABLE EXISTS AT SEVERAL TURBINE PAD LOCATIONS. CONTRACTOR SHALL BE RESPONSIBLE FOR PROPERLY DEWATERING EXCAVATIONS DURING CONSTRUCTION.
2. CONTRACTOR SHALL DISPOSE OF PUMPED WATER IN APPROPRIATE MANNER TO AVOID CONCENTRATED FLOWS FROM SITE. THE USE OF SETTLEMENT PONDS OR SEDIMENT CONTOL DEVICES SUCH AS "DIRTBAGS" SHALL BE EMPLOYED TO SEPARATE SEDIMENTS FROM DEWATERING ACTIVITIES. PUMPED WATER WILL BE DIRECTED AWAY FROM RESOURCES TO NATURAL BUFFER AREAS OR OTHER ACCEPTABLE STABILIZED AREAS. METHODS OF DEWATERING AND THE SEDIMENT CONTROL DEVICES SHALL BE APPROVED BY THE ENGINEER AND THIRD PARTY INSPECTOR AT EACH LOCATION.

TURBINE FOUNDATIONS

1. ELEVATIONS OF TURBINE FOUNDATIONS ARE BASED ON AERIAL SURVEY. FINAL ELEVATIONS OF FOUNDATIONS MAY BE ADJUSTED IN FIELD TO ACCOMMODATE ACTUAL TERRAIN CONDITIONS AND REDUCE IMPACTS.

1/C-3 TYPICAL CONSTRUCTION NOTES
NOT TO SCALE

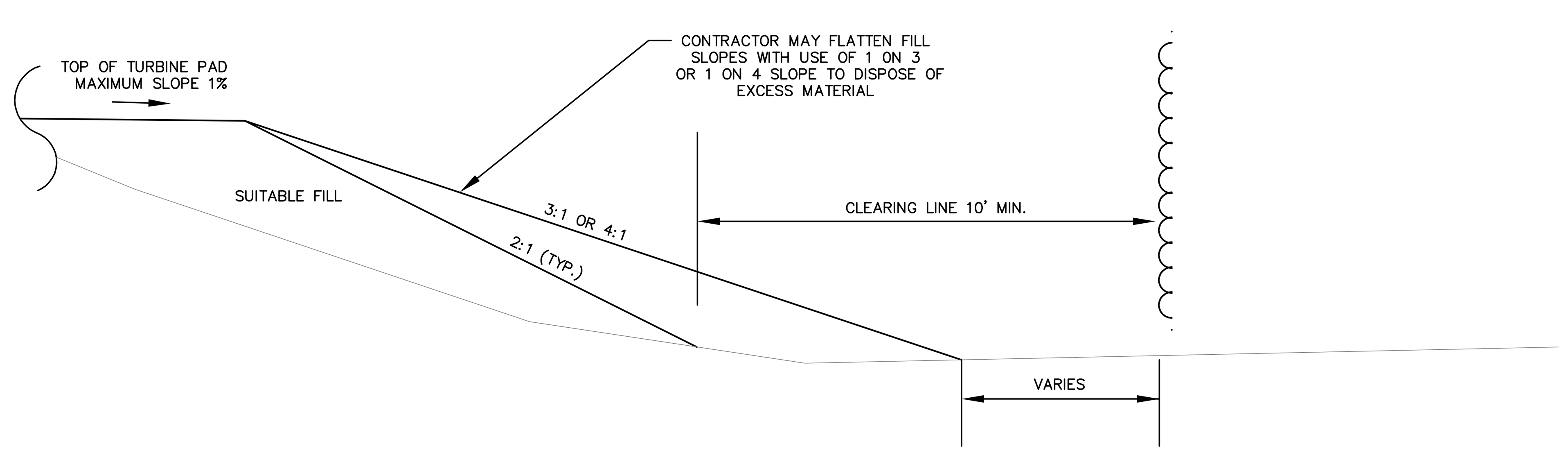

4/C-3 TURBINE PAD FILL SLOPES
NOT TO SCALE

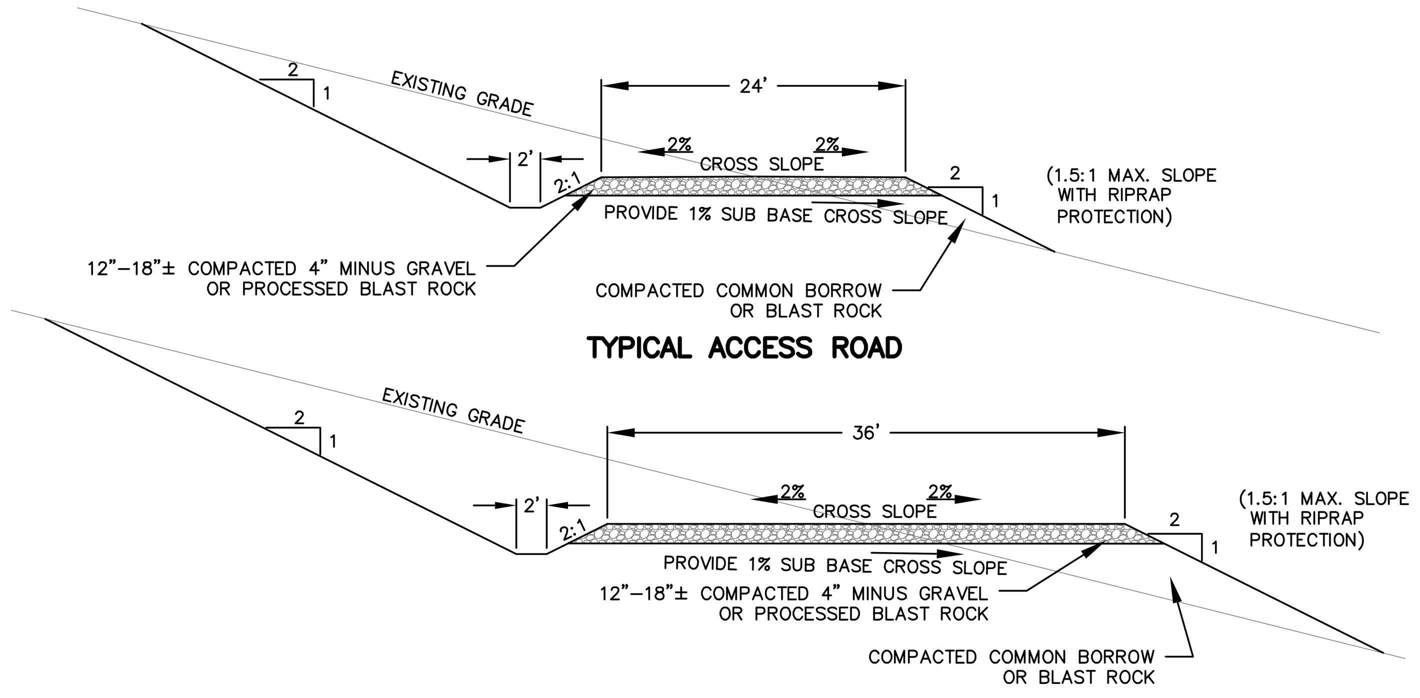

NOTES:
DITCHES SHALL BE CONSTRUCTED TO NOT INTERCEPT GROUND WATER TABLE. DITCH DEPTH SHALL BE 24" MEASURED FROM ROADWAY, EXCEPT AS APPOVED BY THE ENGINEER. DITCHES SHALL BE STONE LINED WHEN THE LONGITUDINAL SLOPES OF THE DITCH EXCEEDS 8%.

FILL AREAS:
1. EXISTING GROUND SHALL BE GRUBBED WITHIN FOOTPRINT OF ROAD IN FILL SECTIONS. HOWEVER, WHEN EMBANKMENT FILL DEPTH EXCEEDS 5', MEASURED VERTICALLY, ALL VEGETATION SHALL BE CUT BUT GRUBBING IS NOT REQUIRED.
2. STABILIZE FILL SLOPES WITH BLAST ROCK, EROSION CONTROL MIX, OR LOAM AND SEED. ALL SLOPES STEEPER THAN 3:1 SHALL BE PROTECTED WITH EROSION CONTROL MIX, EROSION CONTROL MESH, OR BLAST ROCK/RIPRAP. SLOPES STEEPER THAN 2:1 SHALL BE PROTECTED WITH RIPRAP OR SUITABLE BLAST ROCK.
3. BENCH EXISTING GROUND AS NECESSARY TO STABILIZE EXTENSION.

CUT AREAS:
1. 1:4 CUT FACES ARE PERMITTED IN AREAS OF ROCK EXCAVATON ONLY AS APPROVED BY ENGINEER.
2. ALL NON ROCK-FACE SLOPES STEEPER THAN 3:1 SHALL BE PROTECTED WITH EROSION CONTROL MIX, EROSION CONTROL MESH, OR BLAST ROCK. SLOPES STEEPER THAN 2:1 SHALL BE PROTECTED WITH BLAST ROCK.

2/C-3 TYPICAL ROAD DETAILS
NOT TO SCALE

NOTE:
1. COMPACT GRAVEL BASE COURSE TO 95% OF MAXIMUM DENSITY USING HEAVY ROLLER COMPACTION
2. ALL CRANE PADS SHALL BE CONSTRUCTED WITH NO CROSS SLOPE IN ANY DIRECTION.
3. CRANE PADS SHALL BE 75'x100' (MINIMUM). EXACT LOCATION SHALL BE DETERMINED IN THE FIELD BY GENERAL CONTRACTOR.

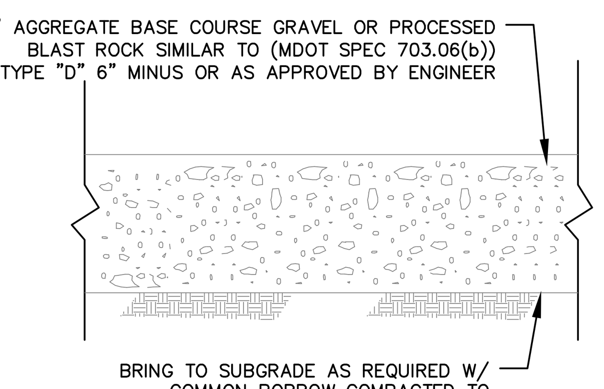

3/C-3 TYPICAL GRAVEL CRANE PAD SECTION
NOT TO SCALE

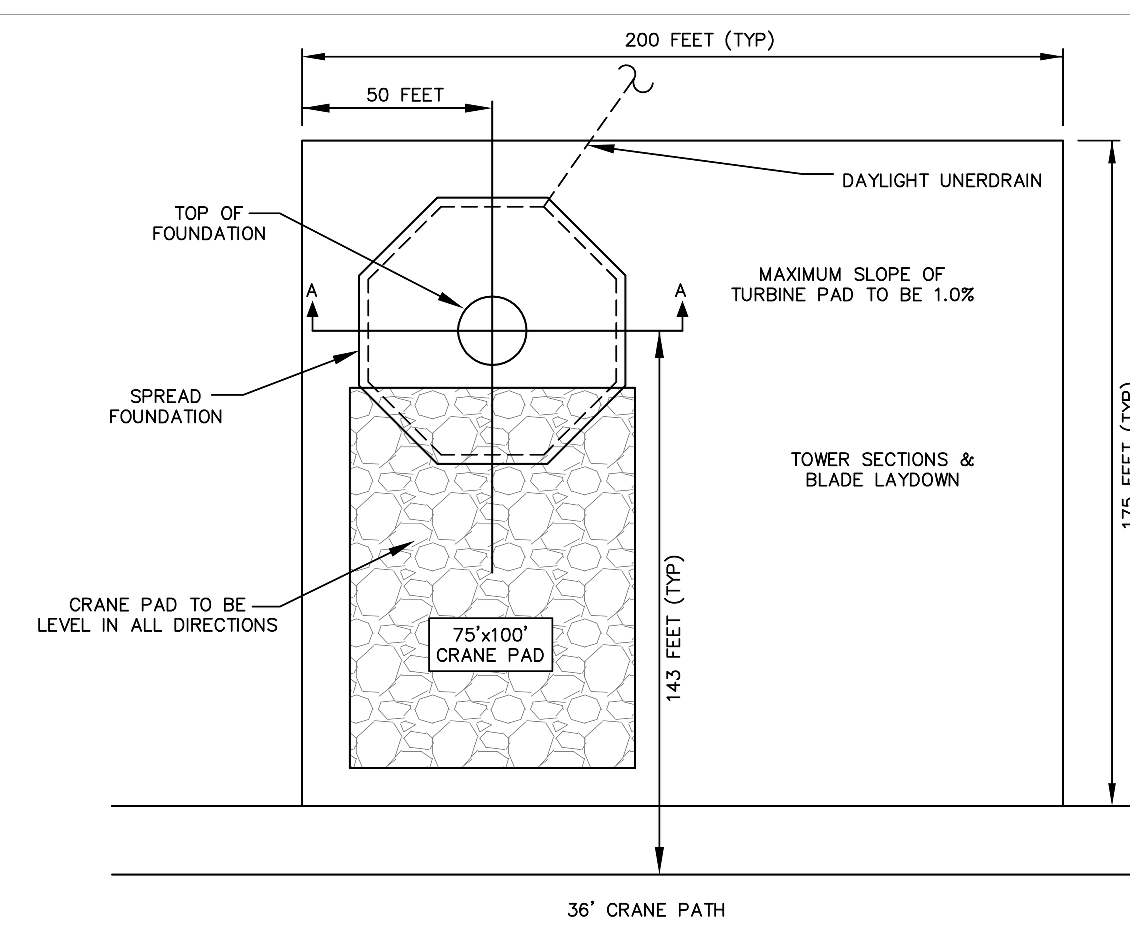

5/C-3 TYPICAL TURBINE PAD LAYOUT
NOT TO SCALE

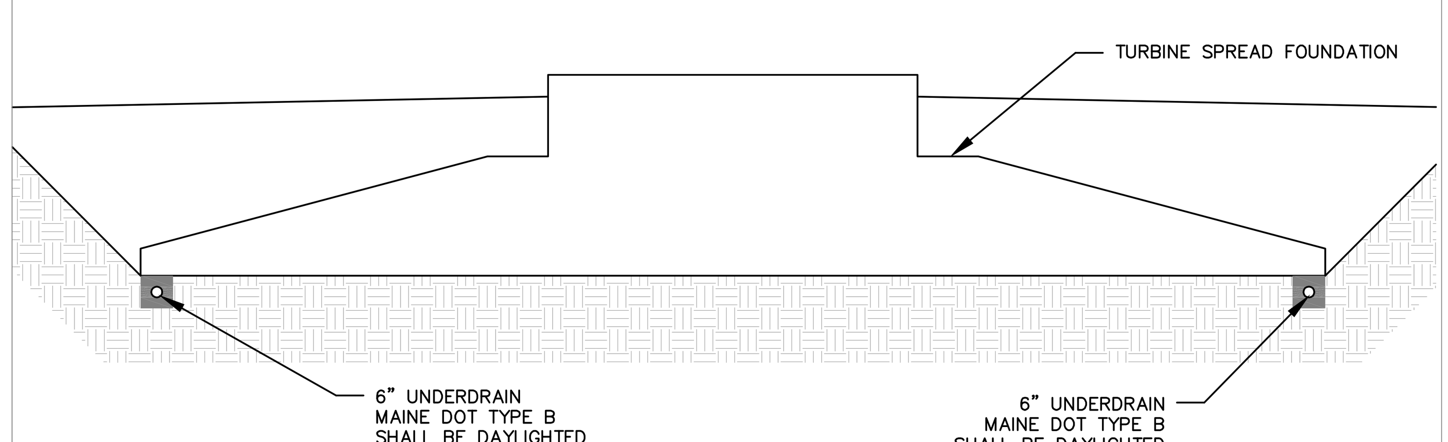

5/C-3 SECTION A-A
NOT TO SCALE

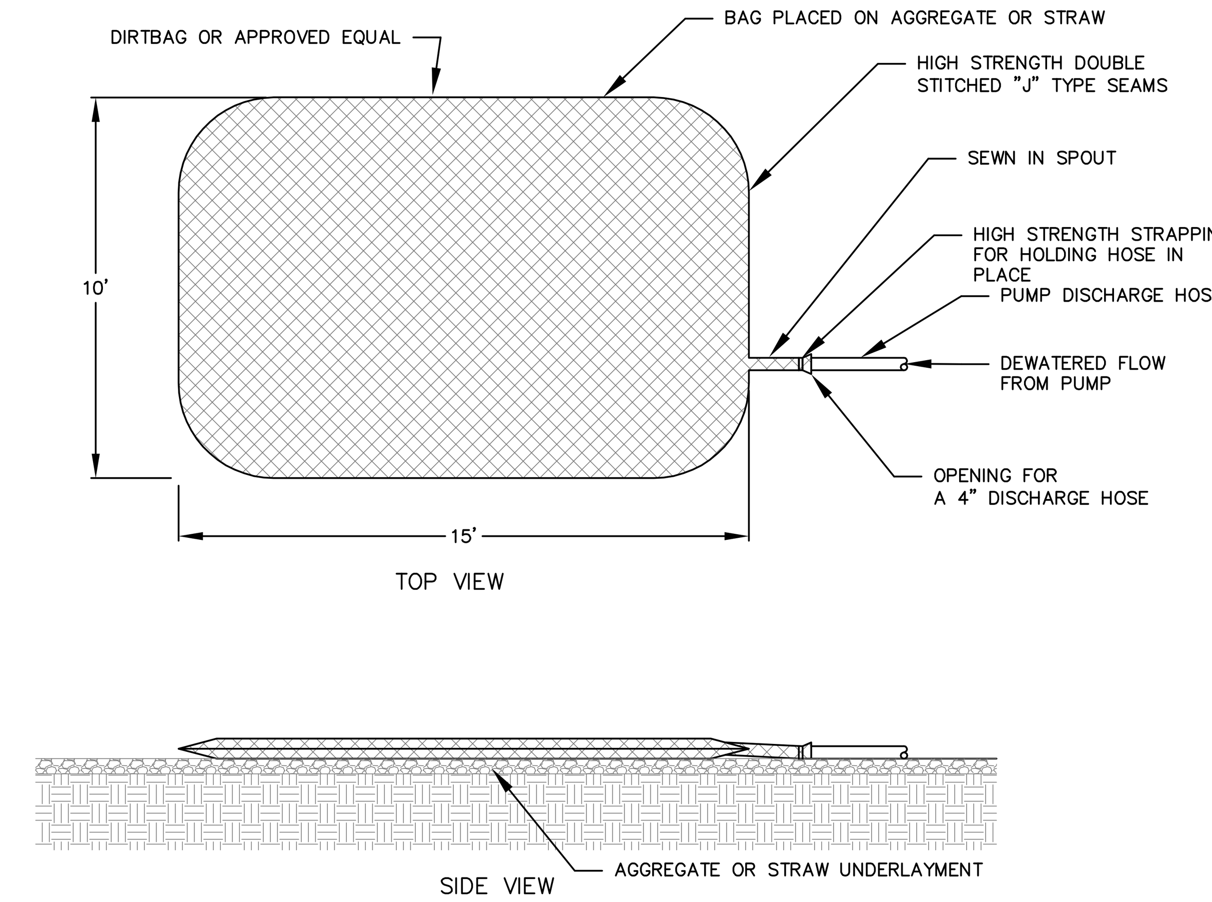

NOTES
1. CONTRACTOR SHALL PROVIDE APPROPRIATE SIZED DEWATERING CONTROL DEVICES TO ACCOMMODATE DEWATERING ACTIVITIES.
2. SEDIMENT CONTROL DEVICES SHALL BE REPLACED WHEN FULL. SEDIMENT CAN BE DISPOSED OFF IN NON STRUCTURAL FILL AREAS OUTSIDE OF RESOURCE PROTECTION ZONES.

7/C-3 DIRTBAG PUMPED SILT CONTROL SYSTEM
NOT TO SCALE

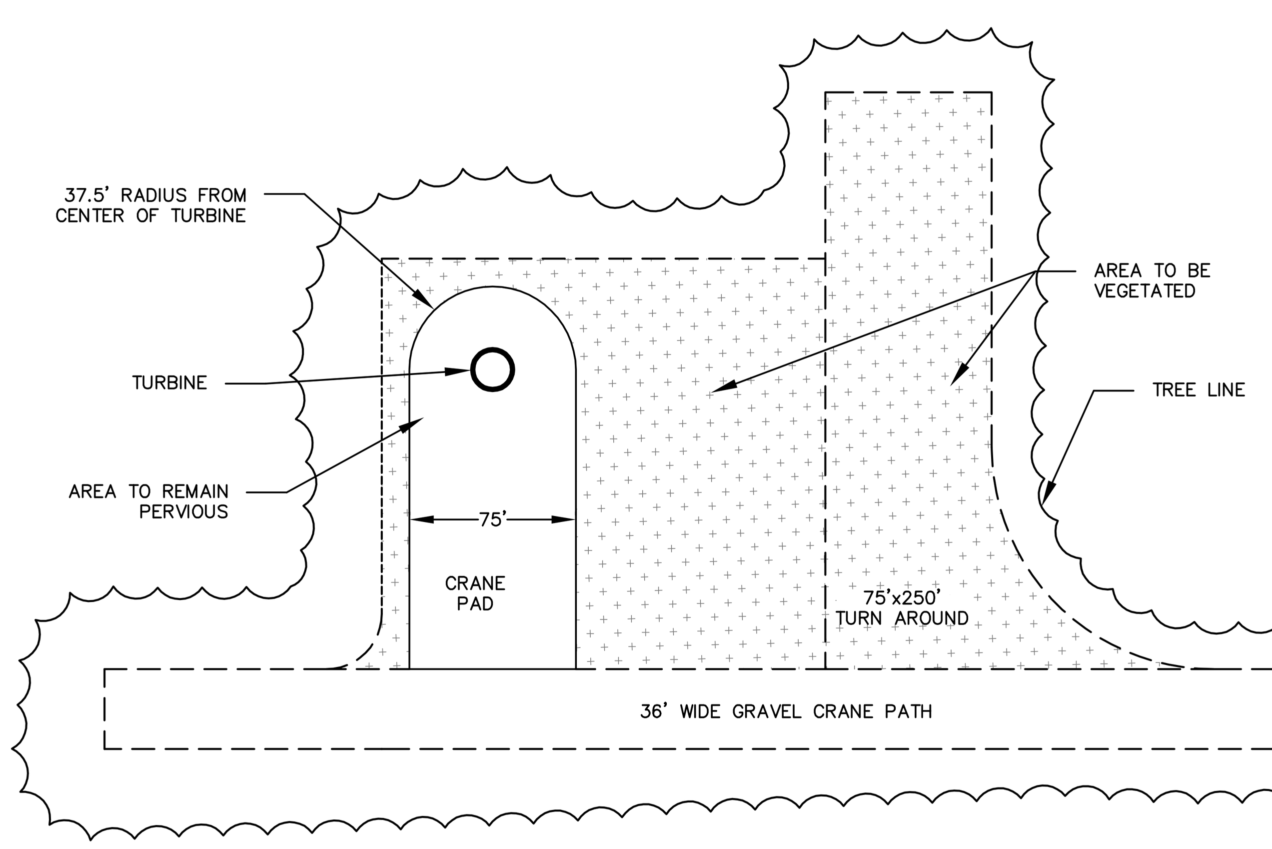

6/C-3 TURBINE PAD REVEGETATION POST CONSTRUCTION
NOT TO SCALE

Rev. #	Dwg. By	Description	Date
1	MT	REVISED PER LURC COMMENTS DATED 01/18/11	1/25/11

BULL HILL WIND PROJECT

Project Location: T16 MD, HANCOCK COUNTY

Drawing Description: DETAILS

Designed By: JMT | Drawn By: JLD | Date: 11/24/10 | Scale: NOT TO SCALE | Approved: - | Checked: BCH

2010-07-26 proposed road centerlines.dwg

Seal: STATE OF MAINE JOHN M. THERIAULT No. 9887 LICENSED PROFESSIONAL ENGINEER 1/25/11

Project No. 74490E

Engineer: SEWALL — AN INTEGRATED TEAM OF GEOSPATIAL, ENGINEERING, SURVEYING AND NATURAL RESOURCE CONSULTANTS — JAMES W. SEWALL COMPANY /Since 1880 — SEWALL.COM — 800 648 4202

Phase: PERMIT

Sheet No. C-3

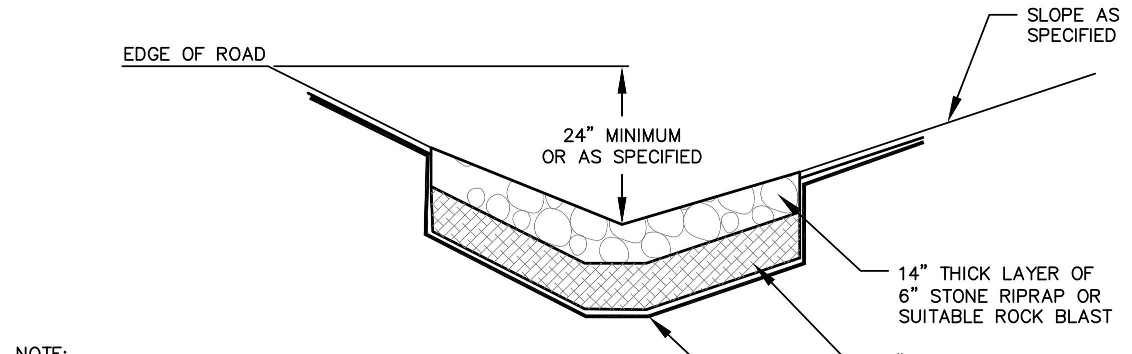

NOTE:
1. STONE DITCH PROTECTION SHALL BE USED ON ALL DITCHES EXCEEDING 8% GRADE.
2. 6" GRAVEL BEDDING MAY BE ELIMINATED IF MIRAFI 180N GEOTEXTILE OR EQUAL IS UTILIZED, STONE WEIGHT IS LESS THAN 230 lbs., AND DROP HEIGHT IS LESS THAN 3 FEET.
3. GEOTEXTILE MAY BE ELIMINATED AS DETERMINED BY ENGINEER IF BASE OF DITCH IS CONSTRUCTED FROM BLAST ROCK.

1 / C-4 TYPICAL STONE DITCH PROTECTION DETAIL
NOT TO SCALE

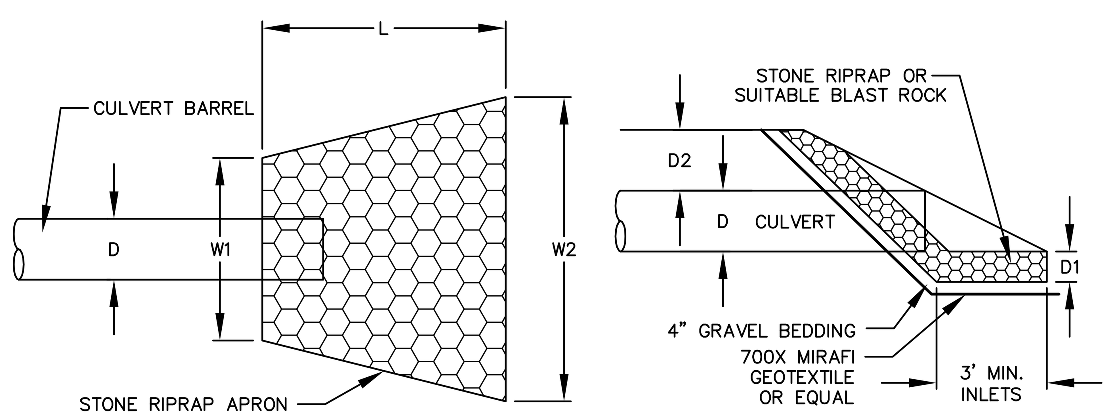

D	W1	W2	L	d50
15"	4'	14'	10'	4"
18"	5'	15'	10'	6"
24"	6'	16'	12'	6"

NOTES
1. THE RIPRAP APRON SHALL BE CONSTRUCTED WITH NO SLOPE ALONG ITS LENGTH.

D	D1	D2 INLET	D2 OUTLET
15"	9"	24"	12"
18"	13.5"	24"	12"
24"	13.5"	36"	12"

NOTE: APRONS SHALL BE CONSTRUCTED ON ALL CULVERT INLETS/OUTLETS UNLESS APPROVED BY ENGINEER.

2 / C-4 CULVERT INLET/OUTLET DETAIL
NOT TO SCALE

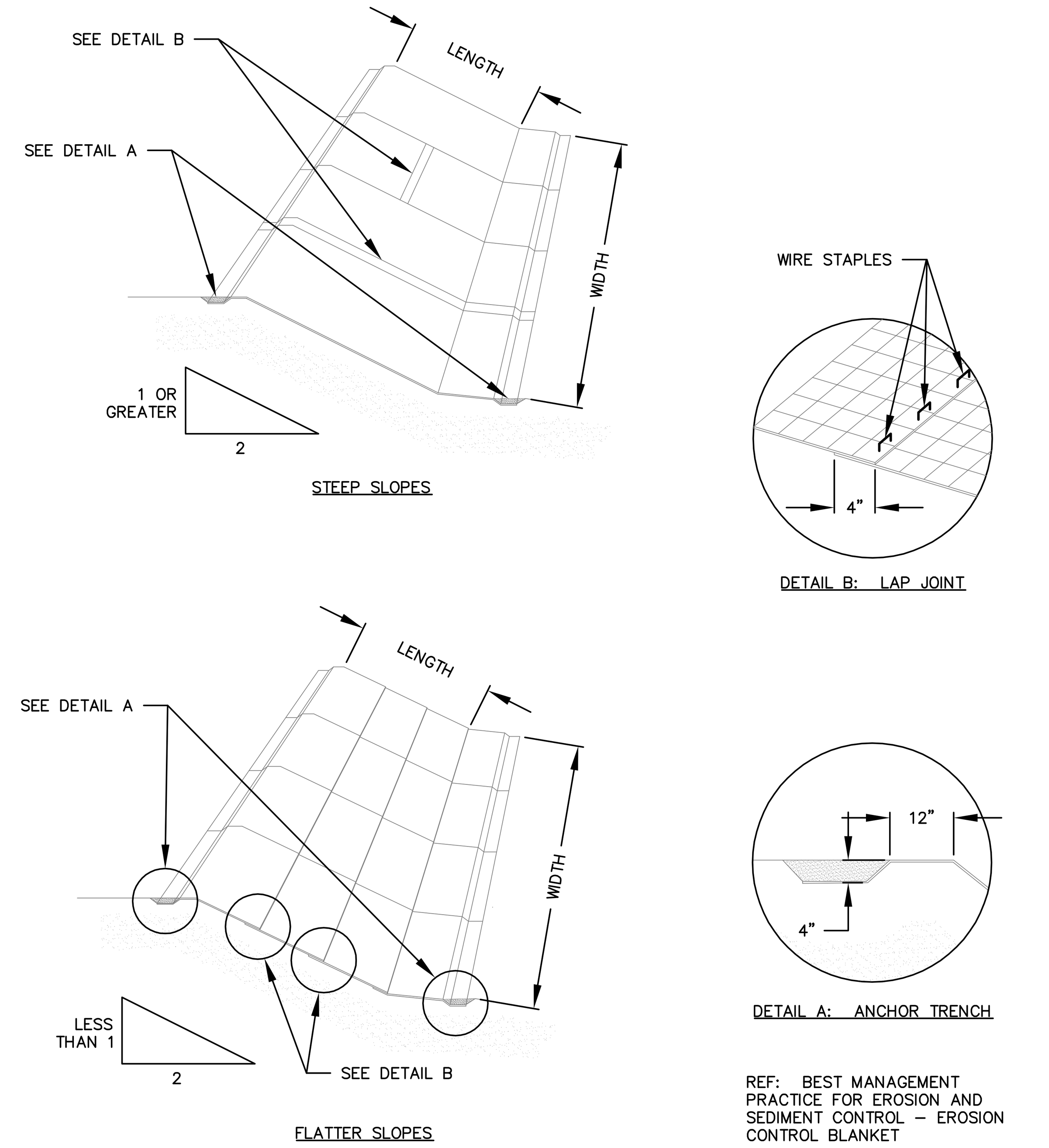

REF: BEST MANAGEMENT PRACTICE FOR EROSION AND SEDIMENT CONTROL – EROSION CONTROL BLANKET

3 / C-4 SLOPE APPLICATION-FOR EROSION CONTROL MESH
NOT TO SCALE

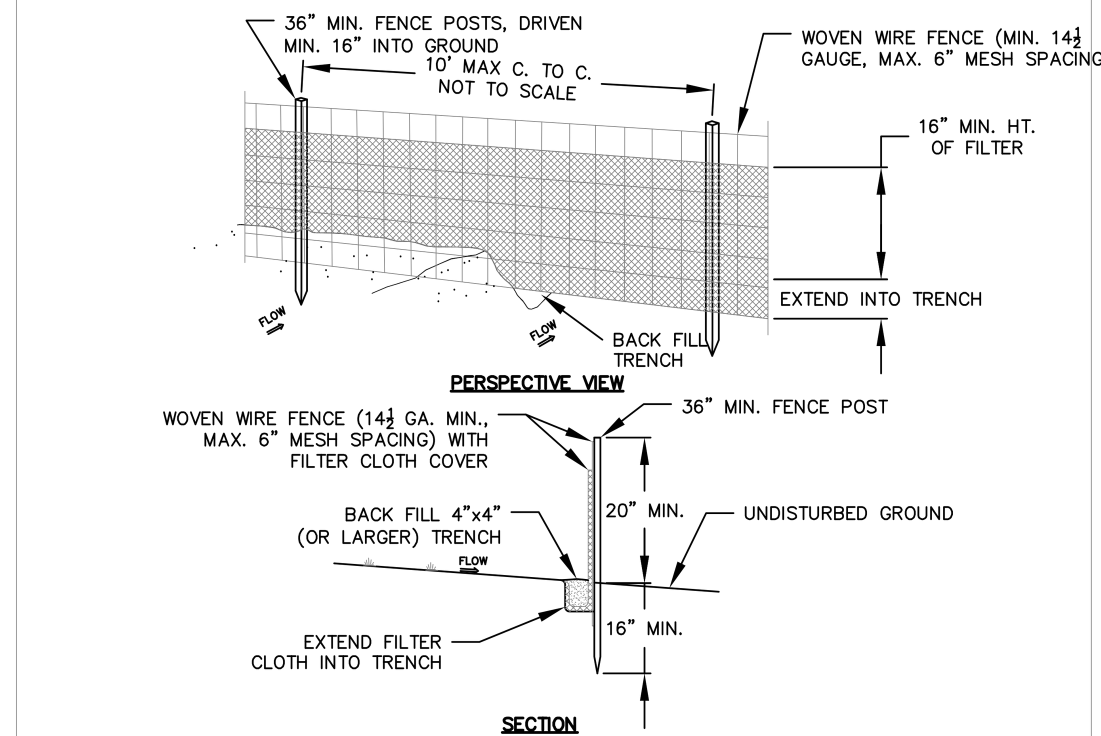

CONSTRUCTION NOTES FOR FABRICATED SILT FENCE

NOTE: THE CONTRACTOR HAS THE OPTION TO NOT USE WOVEN WIRE MESH IF STAKE SPACERS ARE REDUCED TO 6' O.C.

1. WOVEN WIRE FENCE TO BE FASTENED SECURELY TO FENCE POSTS WITH WIRE TIES OR STAPLES.
2. FILTER CLOTH TO BE FASTENED SECURELY TO WOVEN WIRE FENCE WITH TIES SPACED EVER 24" AT TOP OF MID SECTION.
3. WHEN TWO SECTIONS OF FILTER CLOTH ADJOIN EACH OTHER THEY SHALL BE OVERLAPPED BY SIX INCHES AND FOLDED.
4. MAINTENANCE SHALL BE PERFORMED AS NEED AND MATERIAL REMOVED WHEN "BULGES" DEVELOP IN THE SILT FENCE.

POSTS: STEEL EITHER T OR U TYPE 2" HARDWOOD

FENCE: WOVEN WIRE, 14 GA. 6" MAX. MESH OPENING

FILTER CLOTH: FILTER X, MIRAFI 100X, STABILINKA T140N OR APPROVED EQUAL

PREFABRICATED UNIT: GEOFAB, ENVIROFENCE, OR APPROVED EQUAL

4 / C-4 SILT FENCE DETAIL
NOT TO SCALE

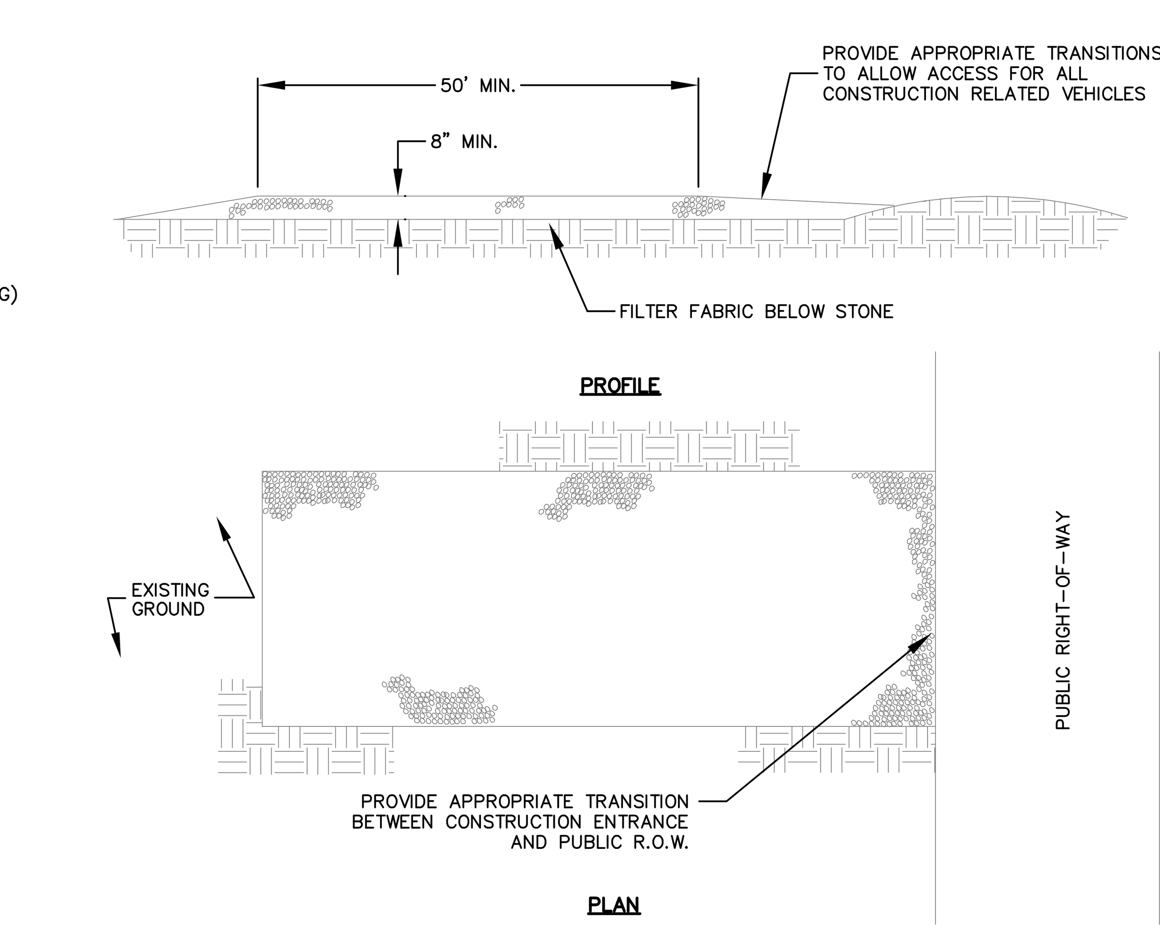

NOTES:
1. STONE SIZE – AASHTO DESIGNATION M43, SIZE NO. 2 (2 1/2" TO 1 1/2"). USE CRUSHED STONE.
2. LENGTH – AS SHOWN ON GRADING PLAN, MIN. 50 FEET.
3. THICKNESS – NOT LESS THAN EIGHT (8) INCHES.
4. WIDTH – NOT LESS THAN FULL WIDTH OF ALL POINT OF INGRESS OR EGRESS.
5. MAINTENANCE – THE ENTRANCE SHALL BE MAINTAINED IN A CONDITION WHICH WILL PREVENT TRACKING OR FLOWING OF SEDIMENT ONTO PUBLIC RIGHT-OF-WAY. THIS MAY REQUIRE PERIODIC TOP DRESSING WITH ADDITIONAL STONE AS CONDITIONS DEMAND AND REPAIR AND/OR CLEAN OUT OF ANY MEASURES USED TO TRAP SEDIMENT. ALL SEDIMENT SPILLED, DROPPED, WASHED, OR TRACKED ONTO PUBLIC RIGHT-OF-WAY MUST BE REMOVED IMMEDIATELY.

5 / C-4 STABILIZED CONSTRUCTION ENTRANCE
NOT TO SCALE

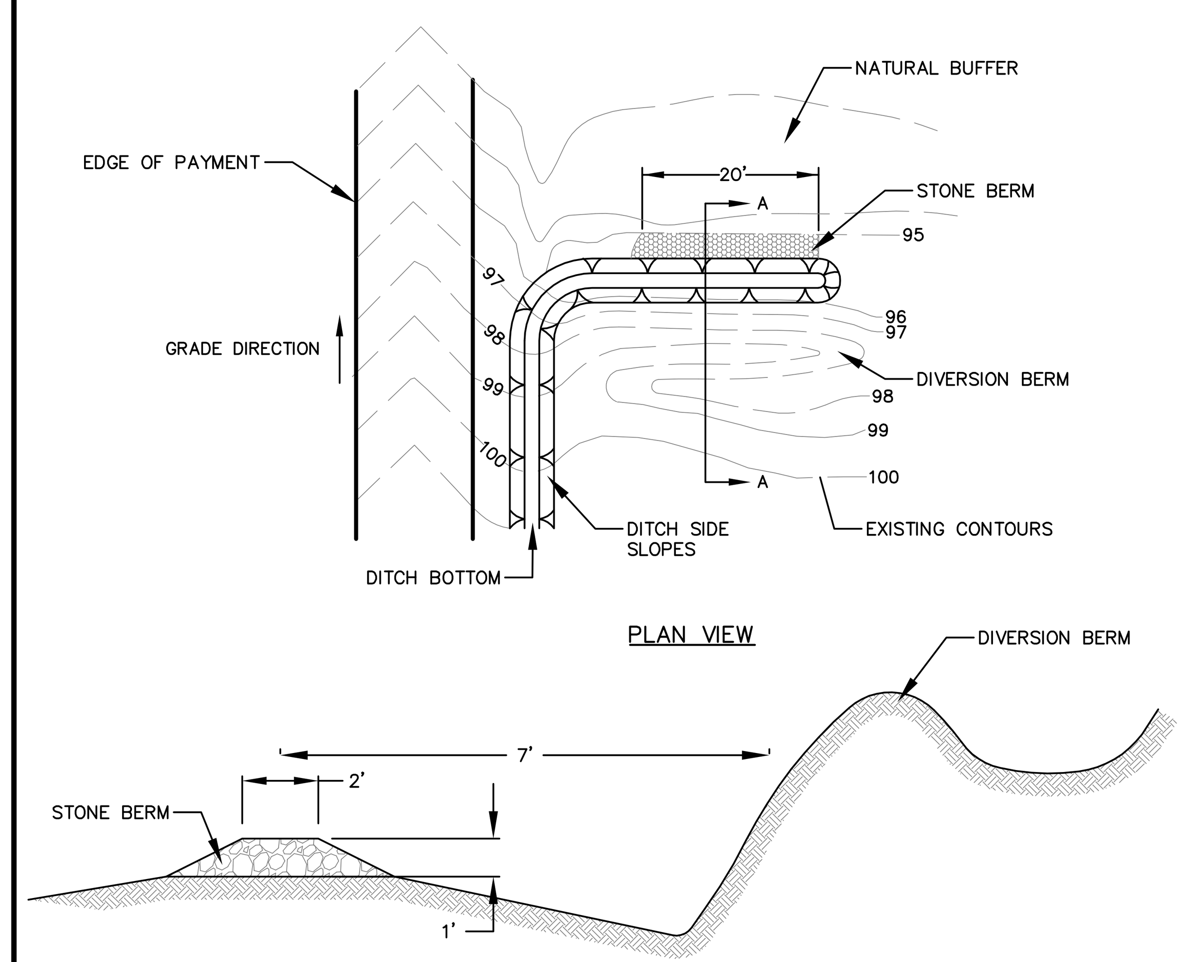

6 / C-4 TYPICAL DITCH TURNOUT
NOT TO SCALE

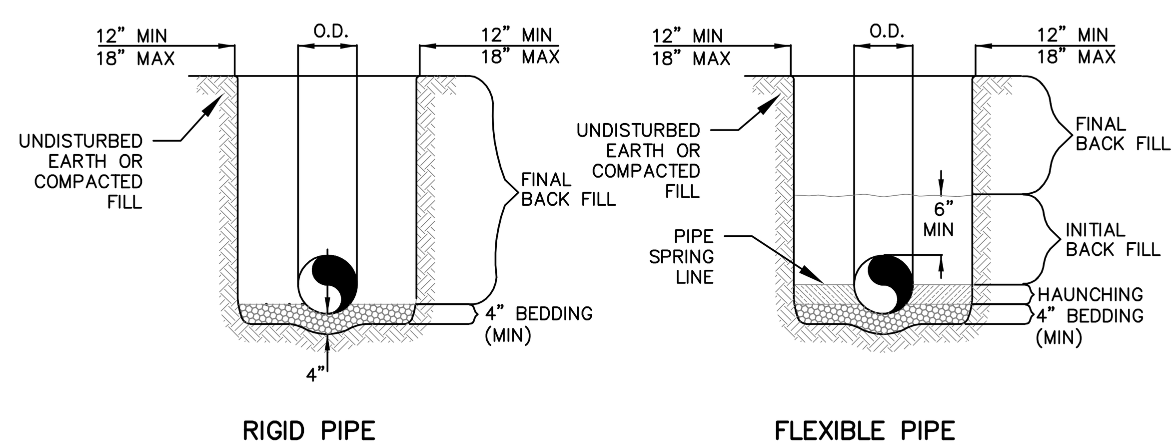

GENERAL NOTES

*AASHTO SOIL CLASSIFICATIONS USED

1. BEDDING SHALL BE CLASS I–A WORKED BY HAND. IF GROUNDWATER IS ANTICIPATED, THEN BEDDING SHALL BE CLASS I–B COMPACTED TO 85% STANDARD PROCTOR. (SEE SPECIFICATIONS FOR GRADATION)
2. HAUNCHING SHALL BE WORKED AROUND THE PIPE BY HAND TO ELIMINATE VOIDS AND SHALL BE CLASS I–A OR CLASS I–B OR CLASS II COMPACTED TO 85% PROCTOR.
3. INITIAL BACK FILL SHALL BE CLASS I–A WORKED BY HAND, OR CLASS I–B OR CLASS II COMPACTED TO 85% STANDARD PROCTOR.
4. FINAL BACK FILL SHALL BE CLASS I, II, OR III COMPACTED AS NOTED IN NOTES 3. FINAL COVER OVER PIPE SHALL BE MIN. 24".
5. ALL MATERIALS ARE CLASSIFIED IN ACCORDANCE WITH ASTM D 2321–LATEST EDITION.
6. ALL MATERIALS SHALL BE INSTALLED IN MAXIMUM 8" LOOSE LIFTS IN ACCORDANCE WITH ASTM D 698. CLASS III AND IV–A MATERIALS SHALL BE COMPACTED NEAR OPTIMUM MOISTURE CONTENT. 7. FILL SALVAGED FROM EXCAVATION SHALL BE FREE OF DEBRIS, ORGANICS AND ROCKS LARGER THAN 3".
8. ALL TRENCH EXCAVATIONS SHALL BE SLOPED, SHORED, SHEETED, BRACED, OR OTHERWISE SUPPORTED IN COMPLIANCE WITH OSHA REGULATIONS AND LOCAL ORDINANCES. (SEE SPECIFICATIONS)

7 / C-4 STORM DRAIN TRENCH AND BEDDING
NOT TO SCALE

L= THE DISTANCE SUCH THAT POINTS A AND B ARE OF EQUAL ELEVATION

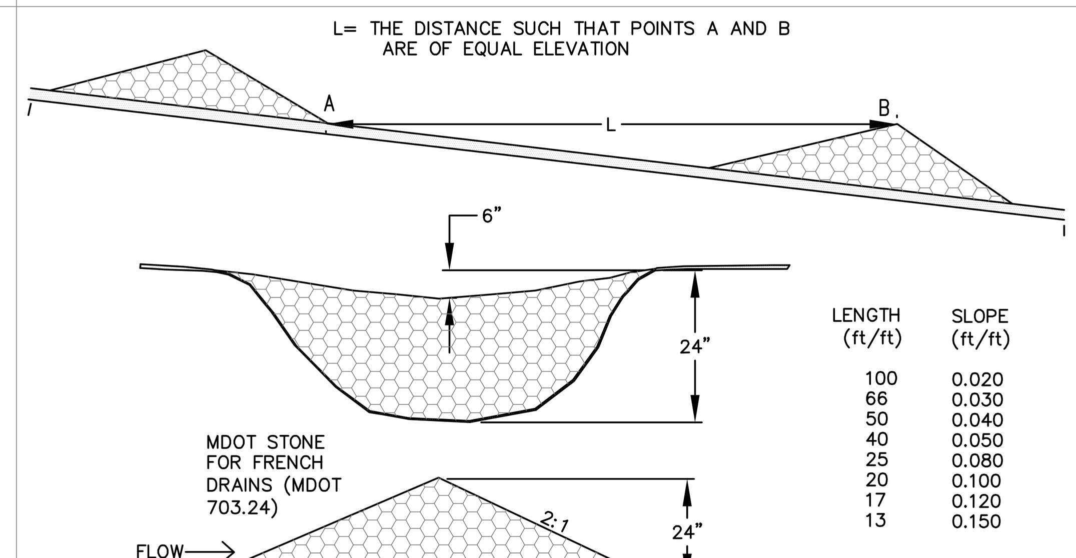

LENGTH (ft/ft)	SLOPE (ft/ft)
100	0.020
66	0.030
50	0.040
40	0.050
25	0.080
20	0.100
17	0.120
13	0.150

NOTE:
1. SPACING OF DAMS MAY BE ADJUSTED WITHIN RIPRAP/BLAST ROCK ARMORED DITCHES AS APPROVED BY ENGINEER.
2. EXACT LOCATIONS OF DAMS TO BE FIELD DETERMINED.

8 / C-4 STONE CHECK DAM DETAILS
NOT TO SCALE

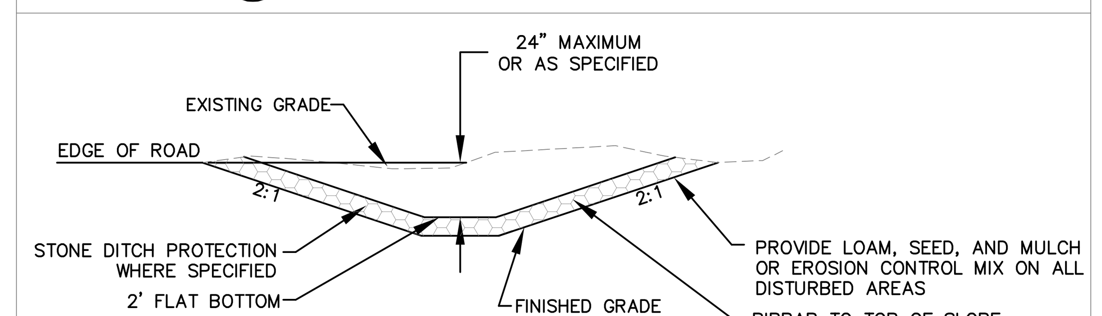

9 / C-4 TYPICAL DITCH CROSS SECTION
NOT TO SCALE

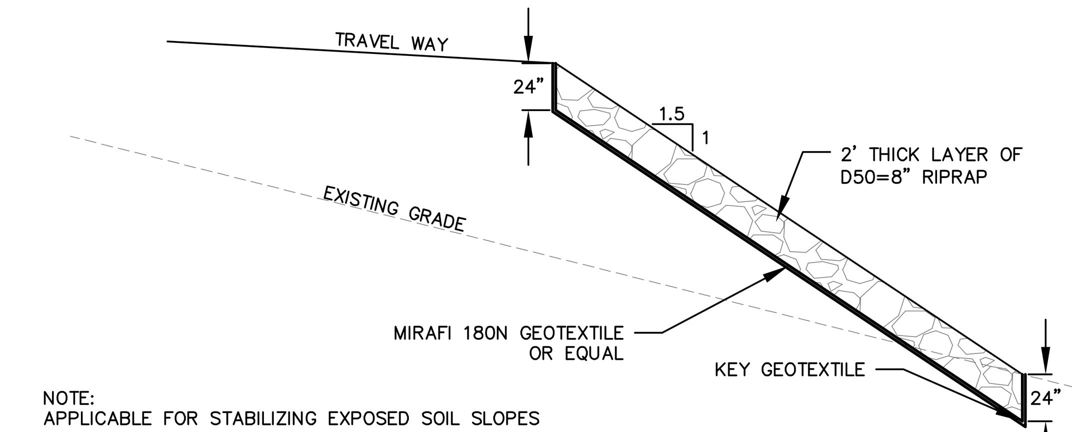

NOTE:
APPLICABLE FOR STABILIZING EXPOSED SOIL SLOPES

10 / C-4 RIPRAP SLOPE PROTECTION DETAIL
NOT TO SCALE

NOTE:
DISPOSAL AREA LOCATIONS TO BE APPROVED BY ENGINEER.

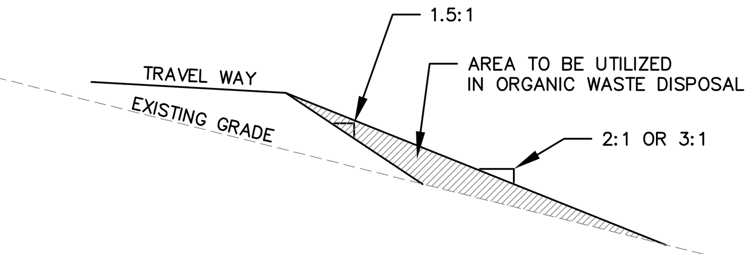

11 / C-4 ORGANIC/DUFF WASTE DISPOSAL DETAIL
NOT TO SCALE

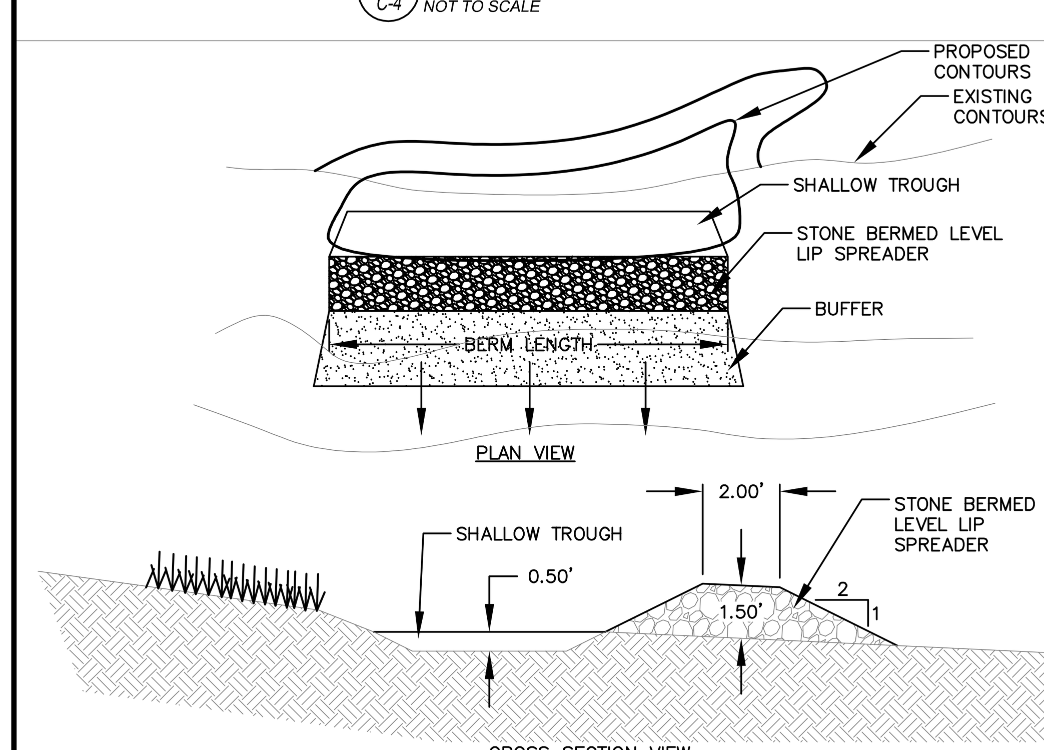

12 / C-4 STONED BERMED LEVEL LIP SPREADER DETAIL
NOT TO SCALE

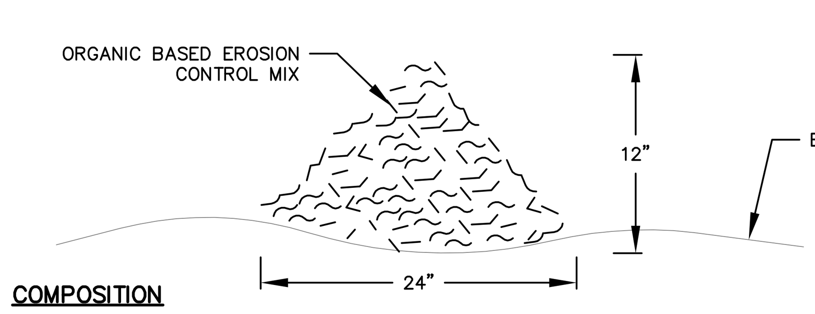

COMPOSITION

EROSION CONTROL MIX SHALL BE MANUFACTURED ON OR OFF THE PROJECT SITE SUCH THAT ITS COMPOSITION IS IN ACCORDANCE WITH THE MDEP MAINE EROSION AND SEDIMENT CONTROL BMP MANUAL, LAST REVISED 3/2003 OR LATER. IT MUST CONSIST PRIMARILY OF ORGANIC MATERIAL, SEPARATED AT THE POINT OF GENERATION, AND MAY INCLUDE: SHREDDED BARK, STUMP GRINDINGS, COMPOSTED BARK, OR ACCEPTABLE MANUFACTURED PRODUCTS. WOOD AND BARK CHIPS, GROUND CONSTRUCTION DEBRIS OR REPROCESSED WOOD PRODUCTS WILL NOT BE ACCEPTABLE AS THE ORGANIC COMPONENT OF THE MIX.

INSTALLATION:
1. THE BARRIER MUST BE PLACED ACROSS THE SLOPE, ALONG THE CONTOUR.
2. EXISTING GROUND SHALL BE PREPARED SUCH THAT THE BARRIER MAY LIE NEARLY FLAT ALONG THE GROUND TO AVOID THE CREATION OF VOIDS AND BRIDGES IN ORDER TO MINIMIZE THE POTENTIAL OF WASH OUTS UNDER THE BARRIER.
3. THE BARRIER SHALL BE A MINIMUM OF 1 FOOT HIGH (AS MEASURED ON THE UPHILL SIDE) AND 2 FEET WIDE FOR SLOPES LESS THAN 5% IN GRADE AND SHALL BE WIDER TO ACCOMMODATE THE ADDITIONAL RUNOFF.
4. EROSION CONTROL MIX MAY BE INSTALLED WHERE SILT FENCE IS ILLUSTRATED ON THE DESIGN PLANS IN AREAS EXCEPT IN, BUT NOT LIMITED TO, THE FOLLOWING AREAS: WETLAND AREAS, AT POINTS OF CONCENTRATED FLOW, BELOW CULVERT OUTLET APRONS, AROUND CATCH BASINS AND CLOSED STORM SYSTEMS AND AT THE BOTTOM OF STEEP SLOPES THAT ARE MORE THAN 50 FEET FROM TOP TO BOTTOM.

13 / C-4 EROSION CONTROL MIX BERM
NOT TO SCALE

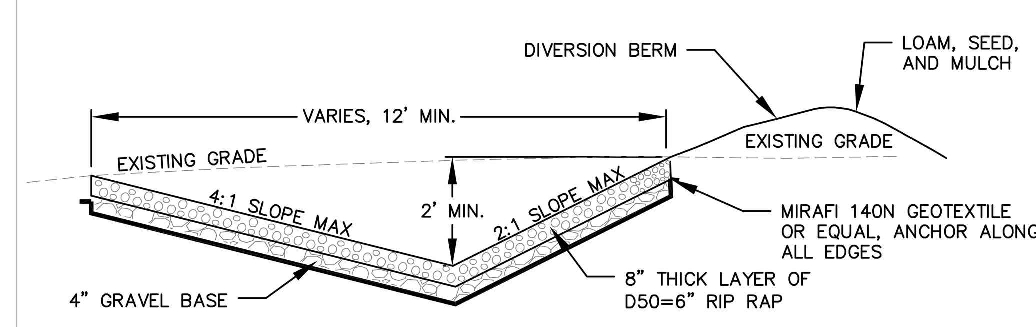

NOTE: SEE GRADING PLAN FOR LENGTH

LEVEL SPREADER NOTES
1) ALL LEVEL SPREADERS SHALL BE CONSTRUCTED IN ACCORDANCE WITH THE MAINE EROSION AND SEDIMENTATION CONTROL HANDBOOK FOR CONSTRUCTION.
2) ALL LEVEL SPREADERS SHALL BE CONSTRUCTED IN A CUT SECTION, I.E. THERE SHALL BE NO EARTH FILL ALONG DOWNSTREAM EDGE.
3) ALL LEVEL SPREADERS SHALL BE ALIGNED PARALLEL TO THE EXISTING CONTOURS.
4) THE ENTRANCE DITCH TO THE LEVEL SPREADER SHALL HAVE A MAXIMUM GRADE OF 1.0% FOR AT LEAST 50 FEET IMMEDIATELY PRIOR TO ENTERING THE SPREADER.
5) THE LEVEL SPREADER SHALL HAVE A LONGITUDINAL GRADE OF 0.0%

14 / C-4 LEVEL SPREADER
NOT TO SCALE

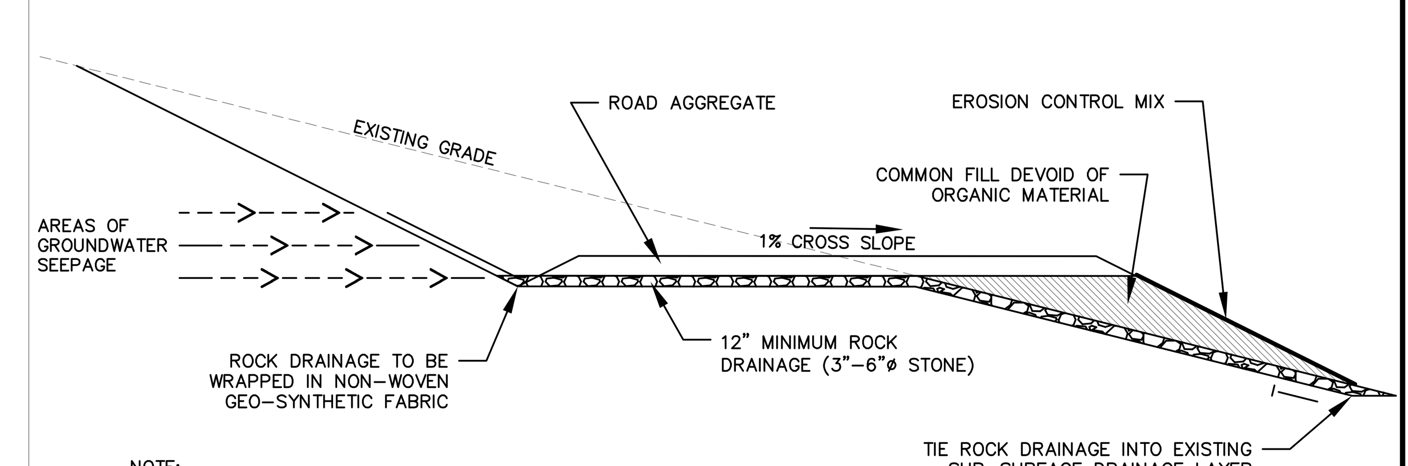

NOTE:
ROCK SANDWICHS SHALL BE CONSTRUCTED WITH RELIEF CULVERTS INSTALLED PERIODICALLY. INVERT OF RELIEF CULVERT SHALL BE A MINIMUM OF 6" ABOVE THE ROCK DRAINAGE LAYER. ADJUST INLET INVERT AND ROCK SANDWICH ELEVATION AS REQUIRED TO MAINTAIN APPROPRIATE COVER OVER CULVERT.

ROCK SANDWICH TYPICALLY UTILIZED IN ROADWAYS TRAVERSING AREAS WITH SHALLOW GROUNDWATER

15 / C-4 ROCK SANDWICH DETAIL
NOT TO SCALE

Rev. #	Dwg. By	Description	Date
1	MT	REVISED PER LURC COMMENTS DATED 01/18/11	1/25/11

BULL HILL WIND PROJECT

Project Location: T16 MD, HANCOCK COUNTY

Drawing Description: DETAILS

Designed By: JMT | Drawn By: JLD | Date: 11/24/10 | Scale: NOT TO SCALE | Approved: - | Checked: BCH

2010-07-26 proposed road centerlines.dwg

Seal: STATE OF MAINE · JOHN M. THERIAULT · No. 9887 · LICENSED · PROFESSIONAL ENGINEER · 1/25/11

Project No.: 74490E

Engineer: SEWALL — JAMES W. SEWALL COMPANY / Since 1880 — SEWALL.COM — 800 648 4202 — AN INTEGRATED TEAM OF GEOSPATIAL, ENGINEERING, SURVEYING AND NATURAL RESOURCE CONSULTANTS

Phase: PERMIT

Sheet No.: C-4