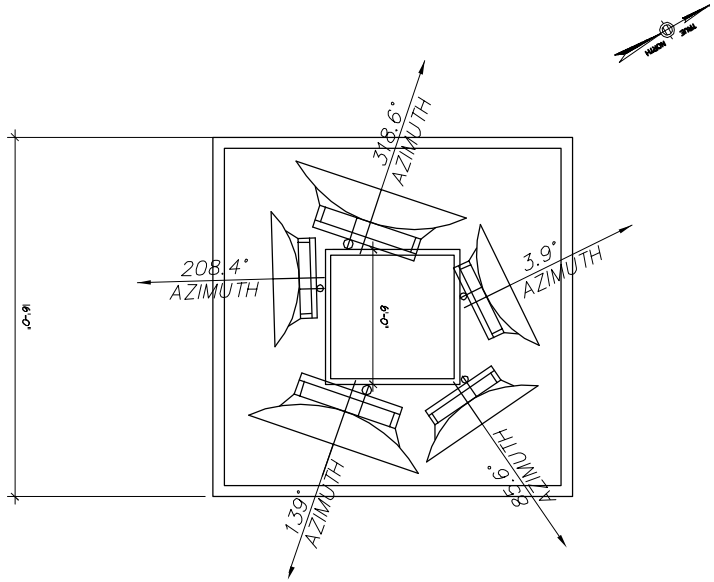
318.6°
AZIMUTH
208.4°
AZIMUTH
3.9°
AZIMUTH
139°
AZIMUTH
85.6°
AZIMUTH
16'-0"
16'-0"

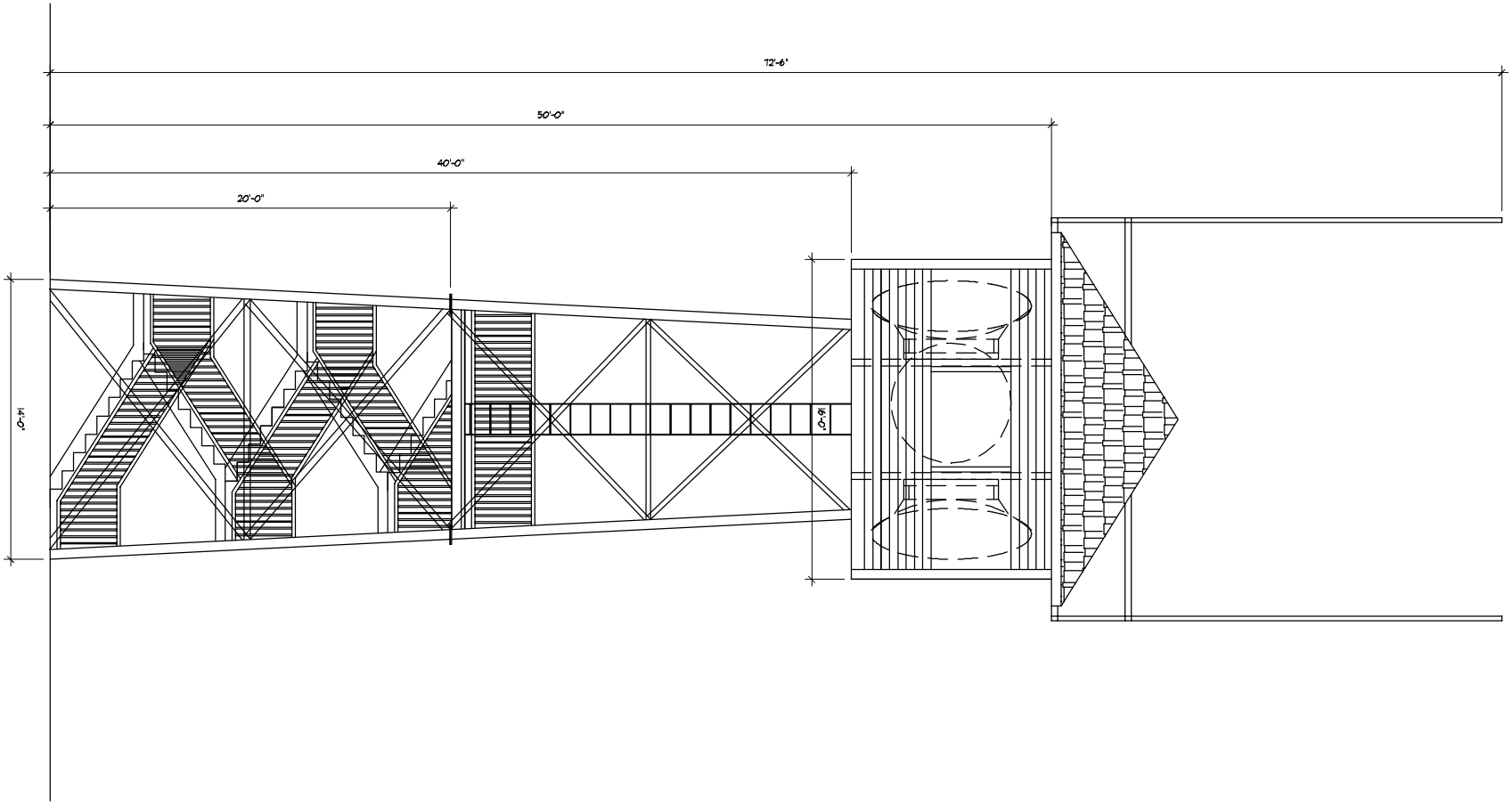
72'-6"
50'-0"
40'-0"
20'-0"
14'-0"
16'-0"