January 30, 2004
Supersedes October 15, 2003

BEFORE SUBMITTING YOUR BID

1. **Use pen and ink to complete the Bid.**

2. **Have you signed and completed the Contract Agreement, Offer & Award Forms?**

3. **As a minimum, the Bidder will submit a Bid Package consisting of the Notice to Contractors, the completed Acknowledgement of Bid Amendments & Submission of Bid Bond Validation Number form, the completed Schedule of Items, 2 copies of the completed Agreement, Offer, & Award form, a Bid Bond or Bid Guarantee, and any other Certifications or Bid Requirements listed in the Bid Book.**

4. **Have you included prices for all Bid Items? ("Zero is not considered a bid price.")**

5. **Have you included a bid guarantee? Acceptable forms are:**

   A. **Bid Bond on the Department's prescribed form for 5% of the Bid Amount. (Or forms that do not contain any significant variations from the Department's forms as solely determined by the Department.)**

   B. **Official Bank Check, Cashier's Check, Certified Check, U.S. Postal Money Order or Negotiable Certificate of Deposit in the amount stated in the Notice to Contractors.**

6. **If the written Bid is to be sent, Federal Express overnight delivery is suggested as the package is delivered directly to the DOT Headquarters Building in Augusta. Other means, such as U.S. Postal Services' Express Mail has proven not to be reliable.**

AND FOR FEDERAL AID PROJECTS

7. **Have you included your DBE Utilization commitment in the proper amounts and signed the DBE Certification?**

If you need further information regarding Bid preparation, call the DOT Contracts Section at (207)624-3410.

For complete specifications regarding bidding requirements, refer to Section 102 of the Maine Department of Transportation, Standard Specifications, Revision December 2002.

January 30, 2004
Supercedes February 11, 2003

NOTICE

The Maine Department of Transportation is attempting to improve the way Bid Amendments/Addendums are handled, and allow for an electronic downloading of bid packages from our website, while continuing to maintain a planholders list.

Prospective bidders, subcontractors or suppliers who wish to download a copy of the bid package and receive a courtesy notification of project specific bid amendments, must provide an email address to Diane Barnes at the MDOT Contracts mailbox at: MDOT.contracts@maine.gov. Each bid package will require a separate request.

Additionally, interested parties will be responsible for reviewing and retrieving the Bid Amendments from our web site, and acknowledging receipt and incorporating those Bid Amendments in their bids using the Acknowledgement of Bid Amendment Form.

The downloading of bid packages from the MDOT website is not the same as providing an electronic bid to the Department. Electronic bids must be submitted via **http://www.BIDX.com**. For information on electronic bidding contract Rebecca Pooler at **rebecca.pooler@maine.gov**.

NOTICE

For security and other reasons, all Bid Packages which are mailed, shall be provided in double (one envelope inside the other) envelopes. The *Inner Envelope* shall have the following information provided on it:

Bid Enclosed - Do Not Open
PIN:
Town:
Date of Bid Opening:
Name of Contractor with mailing address and telephone number:

In Addition to the usual address information, the *Outer Envelope* should have written or typed on it:

Double Envelope: Bid Enclosed
PIN:
Town:
Date of Bid Opening:
Name of Contractor:
This should not be much of a change for those of you who use Federal Express or similar services.

Hand-carried Bids may be in one envelope as before, and should be marked with the following infrormation:

Bid Enclosed: Do Not Open
PIN:
Town:
Name of Contractor:

STATE OF MAINE DEPARTMENT OF TRANSPORTATION

Bid Guaranty-Bid Bond Form

KNOW ALL MEN BY THESE PRESENTS THAT_____

_____, of the City/Town of _____and State of_____

as Principal, and _____as Surety, a

Corporation duly organized under the laws of the State of_____and having a usual place of

Business in _____and hereby held and firmly bound unto the Treasurer of

the State of Maine in the sum of_____,for payment which Principal and Surety bind

themselves, their heirs, executers, administrators, successors and assigns, jointly and severally.

The condition of this obligation is that the Principal has submitted to the Maine Department of Transportation, hereafter Department, a certain bid, attached hereto and incorporated as a part herein, to enter into a written contract for the construction of _____

_____

_____and if the Department shall accept said bid and the Principal shall execute and deliver a contract in the form attached hereto (properly completed in accordance with said bid) and shall furnish bonds for this faithful performance of said contract, and for the payment of all persons performing labor or furnishing material in connection therewith, and shall in all other respects perform the agreement created by the acceptance of said bid, then this obligation shall be null and void; otherwise it shall remain in full force, and effect.

Signed and sealed this_____day of _____20_____

WITNESS:

_____

_____

_____

WITNESS

_____

_____

_____

PRINCIPAL:

By_____

By:_____

By:_____

SURETY:

By_____

By:_____

Name of Local Agency: _____

SAMPLE

NOTICE

Bidders:

Please use the attached “Request for Information” form when faxing questions and comments concerning specific Contracts that have been Advertised for Bid. Include additional numbered pages as required.

State of Maine
Department of Transportation

REQUEST FOR INFORMATION

Date _____ Time _____

Information Requested: **PIN:** _____ **Town(s):** _____

_____

_____

_____

_____

_____

_____

_____

_____

_____

_____

_____

_____

Request by: _____ **Phone: (_____)**_____
Bid Date: _____ **Fax: (_____)**_____

Complete top portion of form and transmit to the number listed in the Notice to Contractors

RFI No: _____ **RFI received:** _____

Response:_____

_____

_____

_____

_____

_____

_____

_____

_____

_____

_____

Response By:_____ Date: _____

INSTRUCTIONS FOR PREPARING THE CONTRACTOR'S DISADVANTAGED BUSINESS ENTERPRISE UTILIZATION PLAN

The Contractor Shall:

1. Submit a completed Contractor's Disadvantaged Business Enterprise Utilization Plan to the Contract's Engineer by 4:30 P.M. on the Bid day.

2. Extend equal opportunity to MDOT certified DBE firms (as listed in MDOT's DBE Directory of Certified Businesses) in the selection and utilization of Subcontractors and Suppliers.

SPECIFIC INSTRUCTIONS FOR COMPLETING THE FORM:

Insert Contractor name, the name of the person(s) preparing the form, and that person(s) telephone and fax number.

Provide total Bid price, Federal Project Identification Number, and location of the Project work.

In the columns, name each DBE firm to be used, provide the Unit or Item cost of the Work/Product to be provided by the DBE firm, give a brief description of the Work, and the dollar value of the Work.

If no DBE firm is to be utilized, the Contractor must document the reason(s) why no DBE firms are being used. Specific supporting evidence of good faith efforts taken by Contractors to solicit DBE Bidders must be attached. This evidence, as a minimum, includes phone logs, e-mail and/or mail DBE solicitation records, and the documented results of these solicitations.

NOTICE

Disadvantaged Business Enterprise Proposed Utilization

The Apparent Low Bidder must submit the Disadvantaged Business Enterprise Proposed Utilization form by close of Business (4:30 P.M.) on Bid day.

The Contractor's Disadvantaged Business Enterprise Proposed Utilization Plan form contains additional information that is required by USDOT.

The Contractor's Disadvantaged Business Enterprise Proposed Utilization Plan form must be used.

A copy of the new Contractor's Disadvantaged Business Enterprise Proposed Utilization Plan and instructions for completing it are attached.

Note: Questions about DBE firms, or to obtain a printed copy of the DBE Directory, contact Equal Opportunity at (207) 624-3066.

MDOTs DBE Directory of Certified firms can also be obtained at http://www.state.me.us/mdot/humnres/o_equalo/cdwbed_h.htm

CONTRACTOR'S DISADVANTAGED BUSINESS ENTERPRISE PROPOSED UTILIZATION PLAN

Low Bidder shall furnish completed form to Contracts Section by 4:30 P.M. on Bid Opening day.

TO: MDOT Contracts Section
16 State House Station,
Augusta, Me 04333-0016
or
Fax: 207-624-3431

Contractor: _____
Prepared by: _____

Telephone: _____ Fax: _____

BID PRICE: $_____FEDERAL PROJECT #_____LOCATION: _____

TOTAL DBE PARTICIPATION AS A PERCENT OF TOTAL BID PRICE = _____%

DBE Firm*	Unit/Item Cost	Unit #	Description of work & Item Number	Actual $ Value
			Total >	

If no DBE firm(s) are used, bidder must document efforts made to secure DBE participation and attach supporting evidence of this effort:
_____
_____.

Examples: Bidder relies wholly upon low quote subcontractor section, DBE firm(s) were not low quote. No DBE firms bid.

***Only DBE firms certified by MDOT prior to bidding can be utilized by Contractor for DBE credit. Directory of certified DBEs is available on MDOT's website: www.state.me.us/mdot**

Equal Opportunity Use:

Plan received ___/___/___ Verified by: _____ Action: _____

Office of Human Resources

Equal Opportunity

MAINE DEPARTMENT OF TRANSPORTATION

Certified Disadvantaged and Women Business Enterprise

DBE DIRECTORY - MINORITY OWNED

WBE DIRECTORY - WOMEN OWNED

WEBSITE FOR DIRECTORY CAN BE FOUND AT:
http://www.state.me.us/mdot/humnres/o_equalo/cdwbed_h.htm

It is the responsibility of the Contractor to access the DBE Directory at this site in order to have the most current listings.

STATE OF MAINE DEPARTMENT OF TRANSPORTATION
NOTICE TO CONTRACTORS

Sealed Bids addressed to the Maine Department of Transportation, Augusta, Maine 04333 and endorsed on the wrapper "Bid for the Hot Mix Asphalt Overlay, Milling and Intersection Improvements in the towns of **Houlton, Littleton, Mars Hill and Westfield**" will be received from contractors at the Reception Desk, Maine DOT Building, Child Street, Augusta, Maine, until 11 00 o'clock A M (prevailing time) on **March 24, 2004** , and at that time and place publicly opened and read Bids will be accepted from contractors prequalified by the Department of Transportation for highway construction or paving projects All other Bids may be rejected **MDOT provides the option of electronic bidding We accept electronic bids for those bid packages posted on the bidx com website Electronic bids do not have to be accompanied by paper bids Please note the Department will accept a facsimile of the bid bond, however, the original bid bond must then be received at the MDOT Contract Section within 72 hours of the bid opening Until further notice, dual bids (one paper, one electronic) will be accepted, with the paper copy taking precedence**

Description Maine Federal Aid Project Nos STP-1138(800)X, PIN 11388 00, NH-1138(700)E, PIN 11387 00, NH-1138(900)E PIN 11389 00, NH-A139(000)E, PIN 11390 00, NH-1139(200)E, PIN 11392 00, & PIN 11116 00

Location In Aroostook County, located in Houlton and Littleton on US Route 1, project STP-1138(800)X is section one beginning 0 13 of a mile southerly of Smyrna Street at the north abutment of the Old Iron Bridge and extending northerly 0 76 of a mile to Houlton Plaza Traffic Light Project NH-1138(700)E is section two continuing northerly 0 88 of a mile Project NH-1138(900)E is section three continuing 1 02 miles northerly and NH-A139(000)E is section four continuing 4 05 miles northerly to a point 0 39 of a mile northerly of the Wiley Rd/Little Rd intersection Total length 6 71 miles NH-1139(200)E is located in Mars Hill and Westfield on US Route 1 beginning 0 16 of a mile southerly of Clark Street and extending northerly 1 21 miles PIN 11116 00 is intersection and approach improvements, located at the intersection of Ludlow Road and Callaghan Road in Houlton

Outline of Work Hot Mix Asphalt Overlay, Milling, Intersection Improvements and other incidental work

For general information regarding Bidding and Contracting procedures, contact **Scott Bickford** at (207)624-3410 Our webpage at http //www state me us/mdot/project/design/homepg htm contains a copy of the schedule of items, Plan Holders List written portions of bid amendments (not drawings), and bid results For Project-specific information fax all questions to **James Andrews** at (207)624-3401 Questions received after 12 00 noon of Monday prior to bid date will not be answered Bidders shall not contact any other Departmental staff for clarification of Contract provisions, and the Department will not be responsible for any interpretations so obtained Hearing impaired persons may call the Telecommunication Device for the Deaf at (207) 624-3007

Plans, specifications and bid forms may be seen at the Maine DOT Building in Augusta, Maine and at the Department of Transportation's Division Office in Presque Isle They may be purchased from the Department between the hours of 8 00 a m to 4 30 p m by cash, credit card (Visa/Mastercard) or check payable to Treasurer, State of Maine sent to Maine Department of Transportation, Attn Mailroom, 16 State House Station, Augusta, Maine 04333-0016 They also may be purchased by telephone at (207)624-3536 between the hours of 8 00 a m to 4 30 p m Full size plans $9 00 ($12 50 by mail) Half size plans $4 50 ($6 75 by mail), Bid Book $10 ($13 by mail), Single Sheets $2, payment in advance, all non-refundable

Each Bid must be made upon blank forms provided by the Department and must be accompanied by a bid bond at 5% of the bid amount or an official bank check, cashier's check, certified check, certificate of deposit, or United States postal money order in the amount of $50,000 payable to Treasurer, State of Maine as a Bid guarantee A Contract Performance Surety Bond and a Contract Payment Surety Bond, each in the amount of 100 percent of the Contract price, will be required of the successful Bidder

This Contract is subject to all applicable Federal Laws This contract is subject to compliance with the Disadvantaged Business Enterprise program requirements as set forth by the Maine Department of Transportation

All work shall be governed by "State of Maine, Department of Transportation, Standard Specifications Revision of December 2002", price $10 [$13 by mail], and Standard Details, Revision of December 2002, price $20 [$25 by mail] Standard Detail updates can be found at http //www state me us/mdot/project/design/homepg htm

The right is hereby reserved to the MDOT to reject any or all Bids

Augusta, Maine
Date March 3, 2004

STATE OF MAINE
KENNETH L SWEENEY
4028
REGISTERED PROFESSIONAL ENGINEER

~~JOHN E DORITY~~
DEP CHIEF ENGINEER

Houlton, Littleton, Mars Hill, Westfield
11388.00, 11387.00, 11389.00, 11390.00, 11392.00, 11116.00
October 29, 2003
Supercedes June 26, 2003

SPECIAL PROVISION 102.7.3
ACKNOWLEDGMENT OF BID AMENDMENTS
&
SUBMISSION OF BID BOND VALIDATION NUMBER (IF APPLICABLE)

With this form, the Bidder acknowledges its responsibility to check for all Amendments to the Bid Package. For each Project under Advertisement, Amendments are located at http://www.state.me.us/mdot/comprehensive-list-projects/project-information.php It is the responsibility of the Bidder to determine if there are Amendments to the Project, to download them, and to incorporate them into their Bid Package. The Maine DOT will not post Bid Amendments any later than noon the day before Bid opening.

Amendment Number	Date

The Contractor, for itself, its successors and assigns, hereby acknowledges that it has received all of the above referenced Amendments to the Bid Package. Failure to acknowledge receipt of all Amendments to the Bid Package will be considered a Non-curable Bid Defect in accordance with Section 102.11.1 of the Standard Specifications, Revision of December 2002.

CONTRACTOR

_____
Date

_____
Signature of authorized representative

_____
(Name and Title Printed)

Bid Bond Validation Number _____
(Applicable to annual bid bonds or electronic bid bonds.)

MAINE DEPARTMENT OF TRANSPORTATION

BID

DATE OF OPENING : CALL ORDER :

CONTRACT ID : 011387.00

PROJECTS

011116.00
NH-1138(700)E
STP-1138(800)X
OTHERS

COUNTY : AROOSTOOK

CONTRACT ID: 011387.00 PROJECT(S): 011116.00
NH-1138(700)E
STP-1138(800)X
OTHERS

CONTRACTOR :_____

LINE NO	ITEM DESCRIPTION	APPROX. QUANTITY AND UNITS	UNIT PRICE DOLLARS	UNIT PRICE CTS	BID AMOUNT DOLLARS	BID AMOUNT CTS
SECTION 0001 HIGHWAY ITEMS						
0010	202.202 REMOVING PAVEMENT SURFACE	35180.000 SY				
0020	202.203 PAVEMENT BUTT JOINTS	2340.000 SY				
0030	203.22 UNCLASSIFIED EXCAVATION	1650.000 CY				
0040	205.51 WIDENING OF EXISTING SHOULDER	140.000 SY				
0050	206.07 STRUCTURAL ROCK EXCAVATION - DRAINAGE AND MINOR STRUCTURES	60.000 CY				
0060	211.30 DITCH EXCAVATION	150.000 LF				
0070	304.10 AGGREGATE SUBBASE COURSE - GRAVEL	1320.000 CY				
0080	304.103 AGGREGATE SUBBASE - GRAVEL (TRUCK MEASURE)	185.000 CY				
0090	403.209 HOT MIX ASPHALT 9.5 MM HMA (SIDEWALKS, DRIVES, INCIDENT ALS)	920.000 T				

CONTRACT ID: 011387.00 PROJECT(S): 011116.00
NH-1138(700)E
STP-1138(800)X
OTHERS

CONTRACTOR :_____

LINE NO	ITEM DESCRIPTION	APPROX. QUANTITY AND UNITS	UNIT PRICE DOLLARS	UNIT PRICE CTS	BID AMOUNT DOLLARS	BID AMOUNT CTS
0100	403.210 HOT MIX ASPHALT 9.5 MM HMA	10280.000 T				
0110	403.211 HOT MIX ASPHALT (SHIMMING)	7460.000 T				
0120	403.213 HOT MIX ASPHALT 12.5 MM HMA BASE	3470.000 T				
0130	409.15 BITUMINOUS TACK COAT APPLIED	6182.000 G				
0140	411.10 UNTREATED AGGREGATE SURFACE COURSE (TRUCK MEASURE)	600.000 CY				
0150	411.12 CRUSHED STONE SURFACE	22.000 T				
0160	424.37 CRACK REPAIR	3300.000 LF				
0170	603.16 15 INCH CULVERT PIPE OPTION I	30.000 LF				
0180	604.18 ADJUSTING MANHOLE OR CATCH BASIN TO GRADE	84.000 EA				
0190	605.09 6 INCH UNDERDRAIN TYPE B	420.000 LF				

CONTRACT ID: 011387.00 PROJECT(S): 011116.00
NH-1138(700)E
STP-1138(800)X
OTHERS

CONTRACTOR :_____

LINE NO	ITEM DESCRIPTION	APPROX. QUANTITY AND UNITS	UNIT PRICE DOLLARS	UNIT PRICE CTS	BID AMOUNT DOLLARS	BID AMOUNT CTS
0200	606.35 GUARDRAIL DELINEATOR POST	2.000 EA				
0210	606.352 REFLECTORIZED BEAM GUARDRAIL DELINEATORS	18.000 EA				
0220	606.79 GUARDRAIL 350 FLARED TERMINAL	8.000 EA				
0230	609.31 CURB TYPE 3	300.000 LF				
0240	609.40 RESET CURB TYPE 5	100.000 LF				
0250	613.319 EROSION CONTROL BLANKET	2060.000 SY				
0260	615.07 LOAM	15.000 CY				
0270	618.1301 SEEDING METHOD NUMBER 1 - PLAN QUANTITY	3.000 UN				
0280	618.1401 SEEDING METHOD NUMBER 2 - PLAN QUANTITY	12.000 UN				
0290	619.1201 MULCH - PLAN QUANTITY	15.000 UN				

CONTRACT ID: 011387.00 PROJECT(S): 011116.00
NH-1138(700)E
STP-1138(800)X
OTHERS

CONTRACTOR :_____

LINE NO	ITEM DESCRIPTION	APPROX. QUANTITY AND UNITS	UNIT PRICE DOLLARS	UNIT PRICE CTS	BID AMOUNT DOLLARS	BID AMOUNT CTS
0300	627.76 TEMPORARY PVMT. MARK LINE, W OR YELLOW	LUMP	LUMP			
0310	629.05 HAND LABOR, STRAIGHT TIME	50.000 HR				
0320	631.10 AIR COMPRESSOR (INCLUDING OPERATOR)	50.000 HR				
0330	631.11 AIR TOOL (INCLUDING OPERATOR)	50.000 HR				
0340	631.12 ALL PURPOSE EXCAVATOR (INCLUDING OPERATOR)	50.000 HR				
0350	631.172 TRUCK - LARGE (INCLUDING OPERATOR)	50.000 HR				
0360	631.32 CULVERT CLEANER (INCLUDING OPERATOR)	10.000 HR				
0370	639.19 FIELD OFFICE TYPE B	1.000 EA				
0380	643.86 TRAFFIC SIGNAL LOOP DETECTORS	17.000 EA				
0390	652.38 FLAGGER	4320.000 HR				

CONTRACT ID: 011387.00 PROJECT(S): 011116.00
NH-1138(700)E
STP-1138(800)X
OTHERS

CONTRACTOR :_____

LINE NO	ITEM DESCRIPTION	APPROX. QUANTITY AND UNITS	UNIT PRICE DOLLARS	UNIT PRICE CTS	BID AMOUNT DOLLARS	BID AMOUNT CTS
0400	652.39 WORK ZONE TRAFFIC CONTROL	LUMP	LUMP			
0410	656.75 TEMPORARY SOIL EROSION AND WATER POLLUTION CONTROL	LUMP	LUMP			
0420	659.10 MOBILIZATION	LUMP	LUMP			
	SECTION 0001 TOTAL					
	TOTAL BID					

CONTRACT AGREEMENT, OFFER & AWARD

AGREEMENT made on the date last signed below, by and between the State of Maine, acting through and by its Department of Transportation (Department), an agency of state government with its principal administrative offices located at Child Street, Augusta, Maine, with a mailing address at 16 State House Station, Augusta, Maine 04333-0016, and _____ a corporation or other legal entity organized under the laws of the State of Maine, with its principal place of business located at _____ _____

The Department and the Contractor, in consideration of the mutual promises set forth in this Agreement (the "Contract"), hereby agree as follows:

A. The Work.

The Contractor agrees to complete all Work as specified or indicated in the Contract including Extra Work in conformity with the Contract, **STP-1138(800)X, PIN 11388.00; NH-1138(700)E, PIN 11387.00; NH-1138(900)E, PIN 11389.00; NH-A139(000)E, PIN 11390.00; NH-1139(200)E, PIN 11392.00; & PIN 11116.00, for the Hot Mix Asphalt Overlay, Milling and Intersection Improvements in the towns of Houlton, Littleton, Mars Hill and Westfield, County of Aroostook, State of Maine.** The Work includes construction, maintenance during construction, warranty as provided in the Contract, and other incidental work.

The Contractor shall be responsible for furnishing all supervision, labor, equipment, tools supplies, permanent materials and temporary materials required to perform the Work including construction quality control including inspection, testing and documentation, all required documentation at the conclusion of the project, warranting its work and performing all other work indicated in the Contract.

The Department shall have the right to alter the nature and extent of the Work as provided in the Contract; payment to be made as provided in the same.

B. Time.

The Contractor agrees to complete all Work, except warranty work, on or before **September 17, 2004.** Further, the Department may deduct from moneys otherwise due the Contractor, not as a penalty, but as Liquidated Damages in accordance with Sections 107.7 and 107.8 of the State of Maine Department of Transportation Standard Specifications, Revision of December 2002.

C. Price.

The quantities given in the Schedule of Items of the Bid Package will be used as the basis for determining the original Contract amount and for determining the amounts of the required Performance Surety Bond and Payment Surety Bond, and that the amount of this offer is _____

_____

$_____ Performance Bond and Payment Bond each being 100% of the amount of this Contract.

D. Contract.

This Contract, which may be amended, modified, or supplemented in writing only, consists of the Contract documents as defined in the Plans, Standard Specifications, Revision of December 2002, Standard Details Revision of December 2002 as updated through advertisement, Supplemental Specifications, Special Provisions, Contract Agreement; and Contract Bonds. It is agreed and understood that this Contract will be governed by the documents listed above.

E. Certifications.

By signing below, the Contractor hereby certifies that to the best of the Contractor's knowledge and belief:

1. All of the statements, representations, covenants, and/or certifications required or set forth in the Bid and the Bid Documents, including those in Appendix A to Division 100 of the Standard Specifications Revision of December 2002 (Federal Contract Provisions Supplement), and the Contract are still complete and accurate as of the date of this Agreement.

2. The Contractor knows of no legal, contractual, or financial impediment to entering into this Contract.

3. The person signing below is legally authorized by the Contractor to sign this Contract on behalf of the Contractor and to legally bind the Contractor to the terms of the Contract.

F. Offer.

The undersigned, having carefully examined the site of work, the Plans, Standard Specifications Revision of December 2002, Standard Details Revision of December 2002 as updated through advertisement, Supplemental Specifications, Special Provisions, Contract Agreement; and Contract Bonds contained herein for construction of: **STP-1138(800)X, PIN 11388.00; NH-1138(700)E, PIN 11387.00; NH-1138(900)E, PIN 11389.00; NH-A139(000)E, PIN 11390.00; NH-1139(200)E, PIN 11392.00; & PIN 11116.00, for the Hot Mix Asphalt Overlay, Milling and Intersection Improvements in the towns of Houlton, Littleton, Mars Hill and Westfield, County of Aroostook, State of Maine,** on which bids will be received until the time specified in the "Notice to Contractors" do(es) hereby bid and offer to enter into this contract to supply all the materials, tools, equipment and labor to construct the whole of the Work in strict accordance with the terms and conditions of this Contract at the unit prices in the attached "Schedule of Items".

The Offeror agrees to perform the work required at the price specified above and in accordance with the bids provided in the attached "Schedule of Items" in strict accordance with the terms of this solicitation, and to provide the appropriate insurance and bonds if this offer is accepted by the Government in writing.

As Offeror also agrees:

First: To do any extra work, not covered by the attached "Schedule of Items", which may be ordered by the Resident, and to accept as full compensation the amount determined upon a "Force Account" basis as provided in the Standard Specifications, Revision of December 2002, and as addressed in the contract documents.

Second: That the bid bond at 5% of the bid amount or the official bank check, cashier's check, certificate of deposit or U. S. Postal Money Order in the amount given in the "Notice to Contractors", payable to the Treasurer of the State of Maine and accompanying this bid, shall be forfeited, as liquidated damages, if in case this bid is accepted, and the undersigned shall fail to abide by the terms and conditions of the offer and fail to furnish satisfactory insurance and Contract bonds under the conditions stipulated in the Specifications within 15 days of notice of intent to award the contract.

Third: To begin the Work on the date specified in the Engineer's "Notice to Commence Work" as stated in Section 107.2 of the Standard Specifications Revision of December 2002 and complete the Work within the time limits given in the Special Provisions of this Contract.

Fourth: The Contractor will be bound to the Disadvantaged Business Enterprise (DBE) Requirements contained in the attached Notice (Additional Instructions to Bidders) and submit a completed Contractor's Disadvantaged Business Enterprise Utilization Plan by 4:30pm on the day of bid opening to the Contracts Engineer.

Fifth: That this offer shall remain open for 30 calendar days after the date of opening of bids.

Sixth: The Bidder hereby certifies, to the best of its knowledge and belief that: the Bidder has not, either directly or indirectly, entered into any agreement, participated in any collusion, or otherwise taken any action in restraint of competitive bidding in connection with its bid, and its subsequent contract with the Department.

IN WITNESS WHEREOF, the Contractor, for itself, its successors and assigns, hereby execute two duplicate originals of this Agreement and thereby binds itself to all covenants, terms, and obligations contained in the Contract Documents.

CONTRACTOR

_____	_____
Date	(Signature of Legally Authorized Representative of the Contractor)
_____	_____
Witness	(Name and Title Printed)

G. Award.

Your offer is hereby accepted. This award consummates the Contract, and the documents referenced herein.

MAINE DEPARTMENT OF TRANSPORTATION

_____	_____
Date	By: David A. Cole, Commissioner
_____	
Witness	

CONTRACT AGREEMENT, OFFER & AWARD

AGREEMENT made on the date last signed below, by and between the State of Maine, acting through and by its Department of Transportation (Department), an agency of state government with its principal administrative offices located at Child Street, Augusta, Maine, with a mailing address at 16 State House Station, Augusta, Maine 04333-0016, and _____ a corporation or other legal entity organized under the laws of the State of Maine, with its principal place of business located at _____ _____

The Department and the Contractor, in consideration of the mutual promises set forth in this Agreement (the "Contract"), hereby agree as follows:

A. The Work.

The Contractor agrees to complete all Work as specified or indicated in the Contract including Extra Work in conformity with the Contract, **STP-1138(800)X, PIN 11388.00; NH-1138(700)E, PIN 11387.00; NH-1138(900)E, PIN 11389.00; NH-A139(000)E, PIN 11390.00; NH-1139(200)E, PIN 11392.00; & PIN 11116.00, for the Hot Mix Asphalt Overlay, Milling and Intersection Improvements in the towns of Houlton, Littleton, Mars Hill and Westfield, County of Aroostook, State of Maine.** The Work includes construction, maintenance during construction, warranty as provided in the Contract, and other incidental work.

The Contractor shall be responsible for furnishing all supervision, labor, equipment, tools supplies, permanent materials and temporary materials required to perform the Work including construction quality control including inspection, testing and documentation, all required documentation at the conclusion of the project, warranting its work and performing all other work indicated in the Contract.

The Department shall have the right to alter the nature and extent of the Work as provided in the Contract; payment to be made as provided in the same.

B. Time.

The Contractor agrees to complete all Work, except warranty work, on or before **September 17, 2004.** Further, the Department may deduct from moneys otherwise due the Contractor, not as a penalty, but as Liquidated Damages in accordance with Sections 107.7 and 107.8 of the State of Maine Department of Transportation Standard Specifications, Revision of December 2002.

C. Price.

The quantities given in the Schedule of Items of the Bid Package will be used as the basis for determining the original Contract amount and for determining the amounts of the required Performance Surety Bond and Payment Surety Bond, and that the amount of this offer is _____

_____

$_____ Performance Bond and Payment Bond each being 100% of the amount of this Contract.

D. Contract.

This Contract, which may be amended, modified, or supplemented in writing only, consists of the Contract documents as defined in the Plans, Standard Specifications, Revision of December 2002, Standard Details Revision of December 2002 as updated through advertisement, Supplemental Specifications, Special Provisions, Contract Agreement; and Contract Bonds. It is agreed and understood that this Contract will be governed by the documents listed above.

E. Certifications.

By signing below, the Contractor hereby certifies that to the best of the Contractor's knowledge and belief:

1. All of the statements, representations, covenants, and/or certifications required or set forth in the Bid and the Bid Documents, including those in Appendix A to Division 100 of the Standard Specifications Revision of December 2002 (Federal Contract Provisions Supplement), and the Contract are still complete and accurate as of the date of this Agreement.

2. The Contractor knows of no legal, contractual, or financial impediment to entering into this Contract.

3. The person signing below is legally authorized by the Contractor to sign this Contract on behalf of the Contractor and to legally bind the Contractor to the terms of the Contract.

F. Offer.

The undersigned, having carefully examined the site of work, the Plans, Standard Specifications Revision of December 2002, Standard Details Revision of December 2002 as updated through advertisement, Supplemental Specifications, Special Provisions, Contract Agreement; and Contract Bonds contained herein for construction of: **STP-1138(800)X, PIN 11388.00; NH-1138(700)E, PIN 11387.00; NH-1138(900)E, PIN 11389.00; NH-A139(000)E, PIN 11390.00; NH-1139(200)E, PIN 11392.00; & PIN 11116.00, for the Hot Mix Asphalt Overlay, Milling and Intersection Improvements in the towns of Houlton, Littleton, Mars Hill and Westfield, County of Aroostook, State of Maine,** on which bids will be received until the time specified in the "Notice to Contractors" do(es) hereby bid and offer to enter into this contract to supply all the materials, tools, equipment and labor to construct the whole of the Work in strict accordance with the terms and conditions of this Contract at the unit prices in the attached "Schedule of Items".

The Offeror agrees to perform the work required at the price specified above and in accordance with the bids provided in the attached "Schedule of Items" in strict accordance with the terms of this solicitation, and to provide the appropriate insurance and bonds if this offer is accepted by the Government in writing.

As Offeror also agrees:

First: To do any extra work, not covered by the attached "Schedule of Items", which may be ordered by the Resident, and to accept as full compensation the amount determined upon a "Force Account" basis as provided in the Standard Specifications, Revision of December 2002, and as addressed in the contract documents.

Second: That the bid bond at 5% of the bid amount or the official bank check, cashier's check, certificate of deposit or U. S. Postal Money Order in the amount given in the "Notice to Contractors", payable to the Treasurer of the State of Maine and accompanying this bid, shall be forfeited, as liquidated damages, if in case this bid is accepted, and the undersigned shall fail to abide by the terms and conditions of the offer and fail to furnish satisfactory insurance and Contract bonds under the conditions stipulated in the Specifications within 15 days of notice of intent to award the contract.

Third: To begin the Work on the date specified in the Engineer's "Notice to Commence Work" as stated in Section 107.2 of the Standard Specifications Revision of December 2002 and complete the Work within the time limits given in the Special Provisions of this Contract.

Fourth: The Contractor will be bound to the Disadvantaged Business Enterprise (DBE) Requirements contained in the attached Notice (Additional Instructions to Bidders) and submit a completed Contractor's Disadvantaged Business Enterprise Utilization Plan by 4:30pm on the day of bid opening to the Contracts Engineer.

Fifth: That this offer shall remain open for 30 calendar days after the date of opening of bids.

Sixth: The Bidder hereby certifies, to the best of its knowledge and belief that: the Bidder has not, either directly or indirectly, entered into any agreement, participated in any collusion, or otherwise taken any action in restraint of competitive bidding in connection with its bid, and its subsequent contract with the Department.

IN WITNESS WHEREOF, the Contractor, for itself, its successors and assigns, hereby execute two duplicate originals of this Agreement and thereby binds itself to all covenants, terms, and obligations contained in the Contract Documents.

CONTRACTOR

_____	_____
Date	(Signature of Legally Authorized Representative of the Contractor)
_____	_____
Witness	(Name and Title Printed)

G. Award.

Your offer is hereby accepted. This award consummates the Contract, and the documents referenced herein.

MAINE DEPARTMENT OF TRANSPORTATION

_____	_____
Date	By: David A. Cole, Commissioner
_____	
Witness	

CONTRACT AGREEMENT, OFFER & AWARD

AGREEMENT made on the date last signed below, by and between the State of Maine, acting through and by its Department of Transportation (Department), an agency of state government with its principal administrative offices located at 1705 U.S. Route 202, Winthrop, Maine, with a mailing address at 16 State House Station, Augusta, Maine 04333-0016, and **(Name of the firm bidding the job)** a corporation or other legal entity organized under the laws of the State of Maine, with its principal place of business located at **(address of the firm bidding the job)**

The Department and the Contractor, in consideration of the mutual promises set forth in this Agreement (the "Contract"), hereby agree as follows:

SAMPLE

A. The Work.

The Contractor agrees to complete all Work as specified or indicated in the Contract including Extra Work in conformity with the Contract, PIN No. **1224.00**, for the **Hot Mix Asphalt Overlay** in the town/city of **West Eastport**, County of **Washington**, Maine. The Work includes construction, maintenance during construction, warranty as provided in the Contract, and other incidental work.

The Contractor shall be responsible for furnishing all supervision, labor, equipment, tools supplies, permanent materials and temporary materials required to perform the Work including construction quality control including inspection, testing and documentation, all required documentation at the conclusion of the project, warranting its work and performing all other work indicated in the Contract.

The Department shall have the right to alter the nature and extent of the Work as provided in the Contract; payment to be made as provided in the same.

B. Time.

The Contractor agrees to complete all Work, except warranty work, on or before **November 15**, 2003**.** Further, the Department may deduct from moneys otherwise due the Contractor, not as a penalty, but as Liquidated Damages in accordance with Sections 107.7 and 107.8 of the State of Maine Department of Transportation Standard Specifications, Revision of December 2002.

C. Price.

The quantities given in the Schedule of Items of the Bid Package will be used as the basis for determining the original Contract amount and for determining the amounts of the required Performance Surety Bond and Payment Surety Bond, and that the amount of this offer is **____(Place bid here in alphabetical form such as One Hundred and Two dollars and 10 cents)**
$_ (repeat bid here in numerical terms, such as $102.10)_____ Performance Bond and Payment Bond each being 100% of the amount of this Contract.

D. Contract.

This Contract, which may be amended, modified, or supplemented in writing only, consists of the Contract documents as defined in the Plans, Standard Specifications, Revision of December 2002, Standard Details Revision of December 2002, Supplemental Specifications, Special Provisions, Contract Agreement; and Contract Bonds. It is agreed and understood that this Contract will be governed by the documents listed above.

E. Certifications.

By signing below, the Contractor hereby certifies that to the best of the Contractor's knowledge and belief:

1. All of the statements, representations, covenants, and/or certifications required or set forth in the Bid and the Bid Documents, including those in Appendix A to Division 100 of the Standard Specifications Revision of December 2002 (Federal Contract Provisions Supplement), and the Contract are still complete and accurate as of the date of this Agreement.

2. The Contractor knows of no legal, contractual, or financial impediment to entering into this Contract.

3. The person signing below is legally authorized by the Contractor to sign this Contract on behalf of the Contractor and to legally bind the Contractor to the terms of the Contract.

F. Offer.

SAMPLE

The undersigned, having carefully examined the site of work, the Plans, Standard Specifications, Revision of December 2002, Standard Details Revision of December 2002, Supplemental Specifications, Special Provisions, Contract Agreement; and Contract Bonds contained herein for construction of:

_____PIN 1234.00 West Eastport, Hot Mix Asphalt Overlay_____,
State of Maine, on which bids will be received until the time specified in the "Notice to Contractors" do(es) hereby bid and offer to enter into this contract to supply all the materials, tools, equipment and labor to construct the whole of the Work in strict accordance with the terms and conditions of this Contract at the unit prices in the attached "Schedule of Items".

The Offeror agrees to perform the work required at the price specified above and in accordance with the bids provided in the attached "Schedule of Items" in strict accordance with the terms of this solicitation, and to provide the appropriate insurance and bonds if this offer is accepted by the Government in writing.

SAMPLE

As Offeror also agrees:

First: To do any extra work, not covered by the attached "Schedule of Items", which may be ordered by the Resident, and to accept as full compensation the amount determined upon a "Force Account" basis as provided in the Standard Specifications, Revision of December 2002, and as addressed in the contract documents.

Second: That the bid bond at 5% of the bid amount or the official bank check, cashier's check, certificate of deposit or U. S. Postal Money Order in the amount given in the "Notice to Contractors", payable to the Treasurer of the State of Maine and accompanying this bid, shall be forfeited, as liquidated damages, if in case this bid is accepted, and the undersigned shall fail to abide by the terms and conditions of the offer and fail to furnish satisfactory insurance and Contract bonds under the conditions stipulated in the Specifications within 15 days of notice of intent to award the contract.

Third: To begin the Work on the date specified in the Engineer's "Notice to Commence Work" as stated in Section 107.2 of the Standard Specifications Revision of 2002 and complete the Work within the time limits given in the Special Provisions of this Contract.

Fourth: The Contractor will be bound to the Disadvantaged Business Enterprise (DBE) Requirements contained in the attached Notice (Additional Instructions to Bidders) and submit a completed Contractor's Disadvantaged Business Enterprise Utilization Plan by 4:30pm on the day of bid opening to the Contracts Engineer.

Fifth: That this offer shall remain open for 30 calendar days after the date of opening of bids.

Sixth: The Bidder hereby certifies, to the best of its knowledge and belief that: the Bidder has not, either directly or indirectly, entered into any agreement, participated in any collusion, or otherwise taken any action in restraint of competitive bidding in connection with its bid, and its subsequent contract with the Department.

IN WITNESS WHEREOF, the Contractor, for itself, its successors and assigns, hereby execute two duplicate originals of this Agreement and thereby binds itself to all covenants, terms, and obligations contained in the Contract Documents.

CONTRACTOR

_____	**(Sign Here)**_____
Date	(Signature of Legally Authorized Representative of the Contractor)
____(**Witness Sign Here)**_____	**(Print Name Here)**_____
Witness	(Name and Title Printed)

SAMPLE

G. Award.

Your offer is hereby accepted. This award consummates the Contract, and the documents referenced herein.

MAINE DEPARTMENT OF TRANSPORTATION

_____	_____
Date	By: David A. Cole, Commissioner

_____
(Witness)

BOND # _____

CONTRACT PERFORMANCE BOND
(Surety Company Form)

KNOW ALL MEN BY THESE PRESENTS: That _____ _____ **and the State of** _____, as principal, and…….....,
a corporation duly organized under the laws of the State of ..... and having a usual place of business ....,
as Surety, are held and firmly bound unto the Treasurer of the State of Maine in the sum of _____ **and 00/100 Dollars ($)**, to be paid said Treasurer of the State of Maine or his successors in office, for which payment well and truly to be made, Principal and Surety bind themselves, their heirs, executors and administrators, successors and assigns, jointly and severally by these presents.

The condition of this obligation is such that if the Principal designated as Contractor in the Contract to construct Project Number _____ in the Municipality of _____ promptly and faithfully performs the Contract, then this obligation shall be null and void; otherwise it shall remain in full force and effect.

The Surety hereby waives notice of any alteration or extension of time made by the State of Maine.

Signed and sealed this ..... day of ....., 20….. .

WITNESSES:	SIGNATURES:
	CONTRACTOR:
Signature.....	.....….....
Print Name Legibly	Print Name Legibly ...…….....
	SURETY:
Signature	.....…….....
Print Name Legibly	Print Name Legibly .....
SURETY ADDRESS:	NAME OF LOCAL AGENCY:
.....	ADDRESS .....
.....	...…….....
.....	.....…….....
TELEPHONE.....	.....…….....

SAMPLE

BOND # _____

CONTRACT PAYMENT BOND
(Surety Company Form)

KNOW ALL MEN BY THESE PRESENTS: That _____ _____ **and the State of** _____, as principal, and.....….....
a corporation duly organized under the laws of the State of ..... and having a usual place of business in .....……., as Surety, are held and firmly bound unto the Treasurer of the State of Maine for the use and benefit of claimants as herein below defined, in the sum of _____ **and 00/100 Dollars ($)** for the payment whereof Principal and Surety bind themselves, their heirs, executors and administrators, successors and assigns, jointly and severally by these presents.

The condition of this obligation is such that if the Principal designated as Contractor in the Contract to construct Project Number _____ in the Municipality of _____ promptly satisfies all claims and demands incurred for all labor and material, used or required by him in connection with the work contemplated by said Contract, and fully reimburses the obligee for all outlay and expense which the obligee may incur in making good any default of said Principal, then this obligation shall be null and void; otherwise it shall remain in full force and effect.

A claimant is defined as one having a direct contract with the Principal or with a Subcontractor of the Principal for labor, material or both, used or reasonably required for use in the performance of the contract.

Signed and sealed this ..... day of ...……....., 20 ... .

WITNESS:	SIGNATURES:
	CONTRACTOR:
Signature…….....	.....….....
Print Name Legibly .....……..	Print Name Legibly ….....
	SURETY:
Signature.....	...….....
Print Name Legibly	Print Name Legibly ….....
SURETY ADDRESS:	NAME OF LOCAL AGENCY:
...….....	ADDRESS ….....
.....	…….....….....
TELEPHONE	…….....….....

SAMPLE

January 26, 1999

SPECIAL PROVISION
PARTNERING

The successful bidder will have the opportunity to enter into a cooperative partnership agreement with the State Department of Transportation for the contract. The objective of this agreement is the effective completion of the work on time and to the standard of quality that will be a source of pride to both the State and the Contractor. The partnering agreement will not affect the terms of the contract. It is intended only to establish an environment of cooperation between the parties. If the partnering agreement is accepted.

1. Contractor shall select and provide a third-party facilitator to conduct the team building workshop for the Contractor and Department personnel. Facilitator selection shall require Department concurrence. The cost for the facilitator and his associated expenses will be shared equally by the Department on the next monthly estimate, following receipt of invoice(s) from the Contractor, on an extra work basis.

2. Contractor and Department will exchange lists of the key personnel to be participants in the workshop. The list will contain the name and job title of each person, a contact phone number, and the address for job related correspondence.

3. The Contractor shall select the location and make all arrangements for space as required by facilitator, and for any meals required. This cost to be shared equally.

4. A working arrangement for the partnership will be agreed upon in writing at the workshop. The arrangement will set out the mutually recognized goals and expectation of the parties.

5. The Contractor and the Department agree to make an effort to maintain identified key personnel assigned to the work for its duration. A timely notice by each shall be given if changes by either must be made.

6. Project issues shall be processed in the manner agreed upon by the parties during the orientation.

7. Follow-up workshops may be held periodically throughout the duration of the contract as agreed by the Contractor and the Department.

8. The Partnering Agreement is not intended to be a legal document. Failure by either party to follow the process identified will not be grounds for any claim under the contract.

9. ARE YOU INTERESTED IN THIS OPPORTUNITY? YES _____ NO _____

STATE OF MAINE
DEPARTMENT OF TRANSPORTATION

LOCATION MAP

HOULTON-LITTLETON
AROOSTOOK COUNTY
ROUTE 1

STP-1138(800)X
NH-1138(700)E
NH-1138(900)E
NH-A139(000)E

HOT MIX ASPHALT OVERLAY PPM
MILL & FILL LEVEL II
PROJECT LENGTH : 6.71 MILES

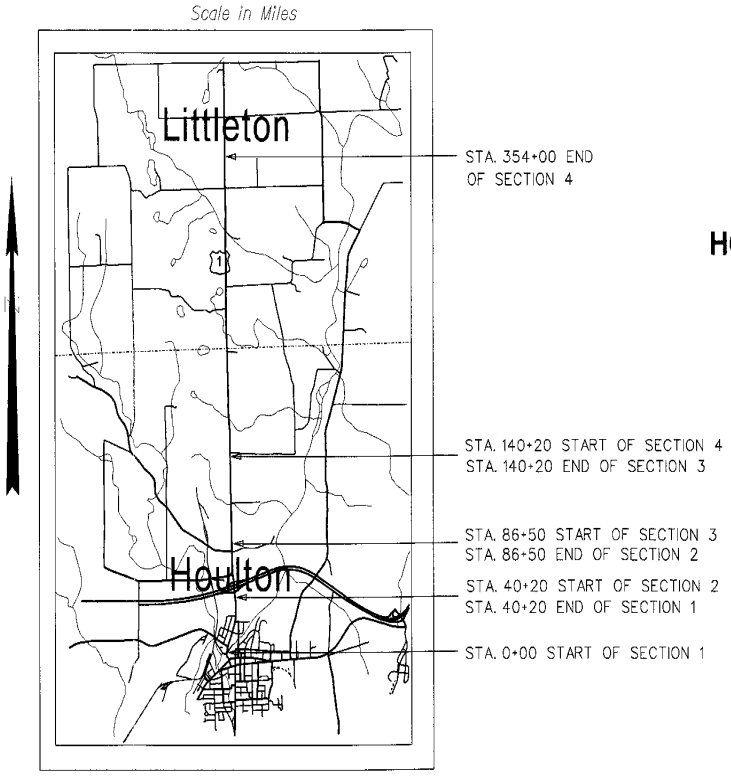

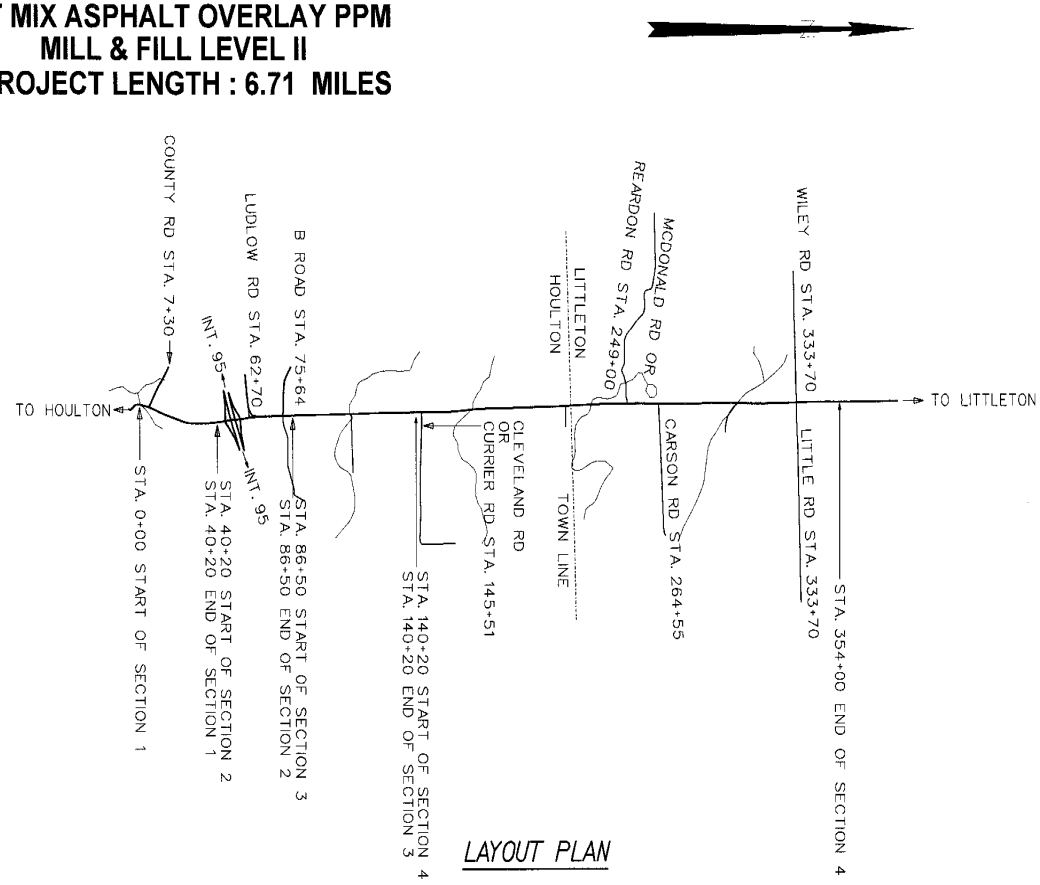

LAYOUT PLAN

TRAFFIC DATA	Sec. 1	Sec. 2
	US 1 (NORTH ST) N/O	US 1 S/O
Prep By: ALL	I95 RAMPS @ CUL	I-95 RAMPS
Current (2004) AADT	16410	15620
Future (2016) AADT	18380	17490
DHV - % of AADT	10	10
Design Hour Volume	1969	1874
% Heavy Trucks (AADT)	7	8
% Heavy Trucks (DHV)	7	7
Directional Distribution (DHV)	55	50
18 kip Equivalent P 2.0	1351	1469
18 kip Equivalent P 2.5	1287	1400
Design Speed (mph)	35	35

STATE OF MAINE
DEPARTMENT OF TRANSPORTATION
APPROVED
COMMISSIONER: DATE 2/17/04
CHIEF ENGINEER: DATE 2/17/04

STATE OF MAINE — Brian Stewart Scott — 6640 — REGISTERED PROFESSIONAL ENGINEER

PROJECT INFORMATION	
PROGRAM	REGIONAL
PROJECT MANAGER	DERYLE SPONBERG
DESIGNER	
CONSULTANT	
PROJECT RESIDENT	
CONTRACTOR	
PROJECT COMPLETION DATE	

SIGNATURE
P.E. NUMBER 6640
DATE 2/13/04

HOULTON-LITTLETON
ROUTE 1
TITLE SHEET

SHEET NUMBER
1
OF 1

Remove Pavement Surface & Hot Mix Asphalt Pavement

Sta 0+0 to Sta 2+50

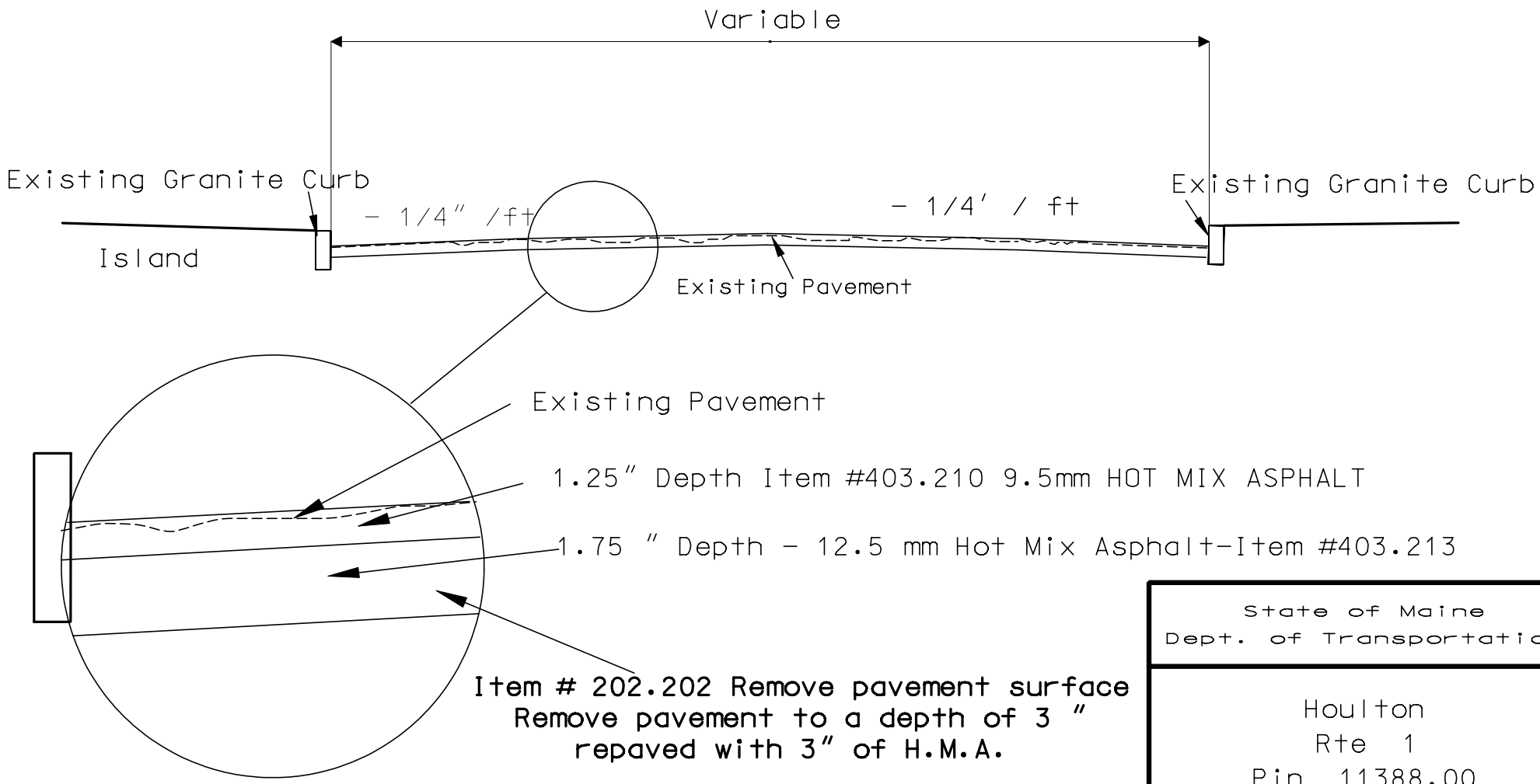

State of Maine
Dept. of Transportation

Houlton
Rte 1
Pin 11388.00

sheet 1 of 3

12/12/01

Remove Pavement Surface & Hot Mix Asphalt Pavement STA 37+50 TO 40+20

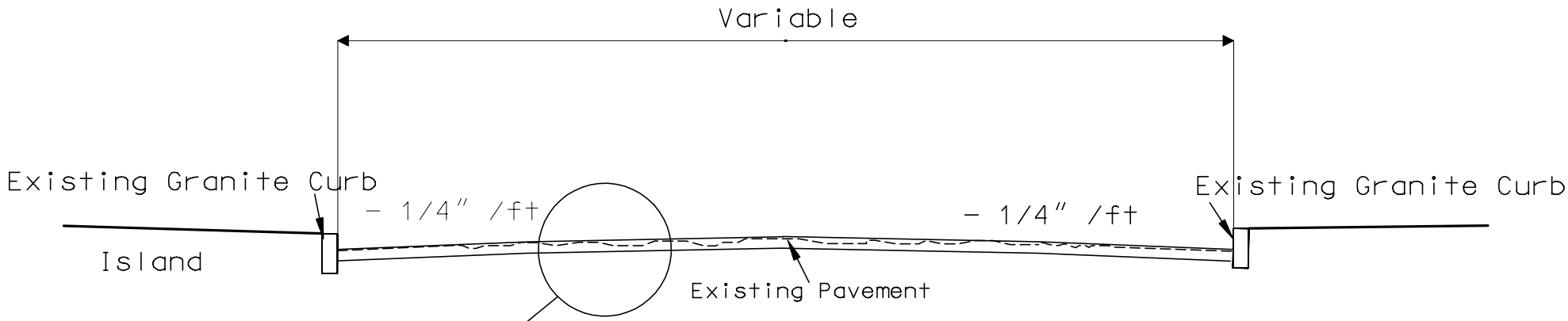

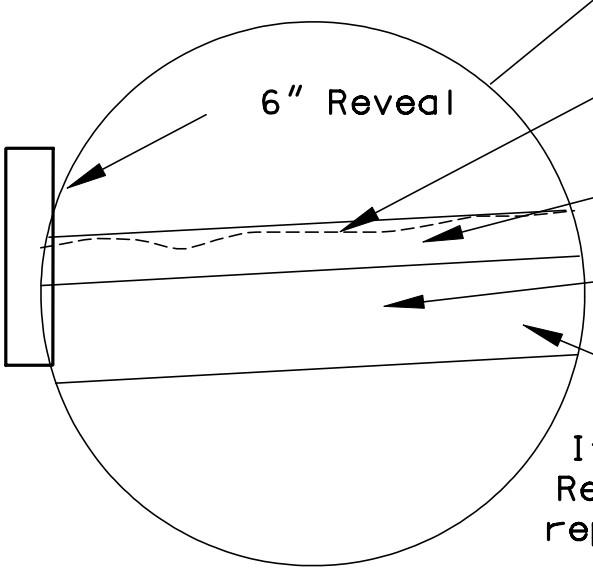

Item # 202.202 Remove pavement surface Remove pavement to a depth so that when repaved with 3" of H.M.A. all curb areas have a 6" reveal

State of Maine
Dept. of Transportation

Houlton
Rte 1
Pin 11388.00

sheet 2 of 3

12/12/01

3/4″ Hot Mix Asphalt Pavement
Sta 2+50 to 37+50

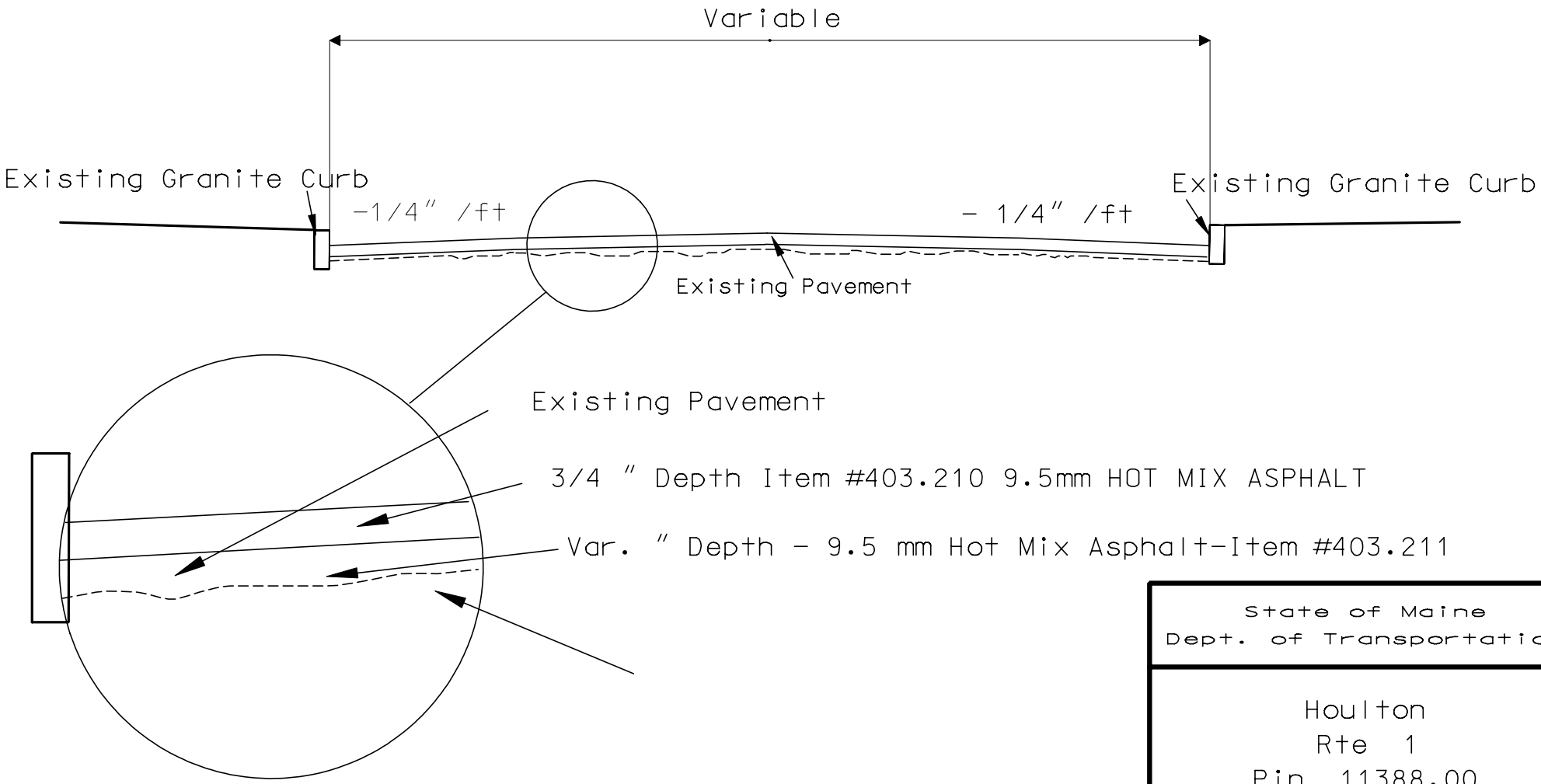

State of Maine
Dept. of Transportation

Houlton
Rte 1
Pin 11388.00

sheet 3 of 3

12/12/01

Pole #	Topo - Left	Station Feet	Topo - Right	Pole #
	START	o	BRIDGE	
	C.B.	0+10		
	DRIVE	0+30		
		0+58	C.B.	
	DRIVE	0+80		
		1+20	DRIVE	
	RIVER STREET	1+35		
	C.B.	1+48		
	C.B.	1+54		
		1+86	C.B.	
	HYDRANT	2+05		
		2+10		POLE # 1/2
POLE # 2		3+42		
	PAVE DRIVE	3+95		
	C.B.	4+15		
	PAVED DRIVE (34' WIDE)	4+50		POLE
		5+00	C.B.	
		5+70	PAVE DRIVE (48' WIDE)	
		5+84	PAVE DRIVE (30' WIDE)	
	PAVED DRIVE	6+60		
	C.B.	7+18		
	SMYRNA STREET	7+30		
	C.B.	7+67		
		7+70	PAVED DRIVE (40' WIDE)	
		7+86	MANHOLE	
		8+01	C.B.	
	PAVED DRIVE (30' WIDE)	8+12		
	MANHOLE	8+16		
	C.B.	8+29		
		8+73	PAVED DRIVE (30' WIDE)	
	PAVED DRIVE	8+85		
	PAVED DRIVE (26' WIDE)	9+28		
		9+54		POLE J. 2
	PAVED DRIVE (26' WIDE)	9+80		
		9+95	PAVED DRIVE	
	PAVED DRIVE (26' WIDE)	10+40		
		10+41	PAVED DRIVE (26' WIDE)	
	C. B.	10+50		
		10+56	MANHOLE	
	C.B.	10+65		
		10+71	C.B.	
		10+97	PAVED DRIVE (26' WIDE)	
		11+02		POLE
	PAVED DRIVE (26' WIDE)	11+48		
		11+82	PAVED DRIVE (26' WIDE)	
	PAVED DRIVE (26' WIDE)	11+83		
		12+00	HYDRANT	
		12+40		POLE G
		12+53	PAVED DRIVE (26' WIDE)	
	PAVED DRIVE (40' WIDE)	12+63		
		13+27	MANHOLE	
		13+40	C.B.	
	GRAVEL DRIVE (20' WIDE)	13+64		
		13+94	PAVED DRIVE (26' WIDE)	
		14+07		POLE
		14+40	GRAVEL DRIVE (26' WIDE)	
	CONC. STEPS	14+54		
	C. B.	14+67		
	PAVED DRIVE (30)	15+85	MANHOLE	
		15+97	C.B.	
	PAVED DRIVE (26' WIDE)	16+24		
		16+50	GRAVEL DRIVE (26' WIDE)	
		17+08		POLE
	PAVED DRIVE (26' WIDE)	17+09		
		17+23	GRAVEL DRIVE (26' WIDE)	
		17+90	HYDRANT	
		17+93		POLE 9 1/2

	MAPLE STREET	18+18			
		18+25	MAPL STREET		
	C.B.	18+25			
		18+56	MANHOLE		
	PAVED DRIVE (40' WIDE)	18+73			
	PAVED DRIVE (40' WIDE)	19+29			
		19+56		pole	
	PAVED DRIVE (40')	20+15			
		20+30	PAVED DRIVE (42)		
		20+66	PAVED DRIVE (26)		
		21+00	MAN HOLE		
		21+08	C.B.		
		21+21		4O5	
	C.B.	21+25			
		21+27	PAVED DRIVE(26)		
	PAVED DRIVE 40	21+54			
		22+10	PAVED DRIVE (26)		
	PAVED DRIVE(40)	22+41			
		22+92	GRAVEL DRIVE (26' WIDE)		
	PAVED DRIVE (40')	23+05			
		23+23	MAN HOLE		
	PAVED DRIVE 22	23+48			
		23+50	GRAVEL DRIVE (26' WIDE)		
		23+88			1
	PAVED DRIVE 40'	25+20			
	PAVED DRIVE 40	25+18			
		25+50	C.B.		
405		25+52			
	C.B.	25+70			
		25+82	WASHBURN ST		
		26+41	PAVED DRIVE 40'		
	PAVED DRIVE	26+70			
		27+50	PAVED DRIVE 80'		
	C.B.	27+76	C.B.		
		28+01		POLE	
POLE		28+05			
		29+20	HYDRANT		
	C.B.	29+48	C.B.		
		29+72	PAVED DRIVE 20'		
	PUTNAM ST	30+00			
		30+55		POLE	
	PAVED DRIVE 20'	30+91			
		31+63	GRAVEL DRIVE (20' WIDE)		
	PAVED DRIVE 20'	31+82			
	C.B.	32+02	C.B.		
	PAVED DRIVE 30'	32+74			
	PAVED DRIVE 42'	34+32			
		34+52	PAVED DRIVE 20'		
	PAVED DRIVE 40'	35+22			
	PAVED DRIVE 40'	35+65			
	C.B.	36+06			
		36+10	C.B. 48 ' WIDE		
	PAVED DRIVE 43'	36+46			
		36+70	GRAVEL DRIVE 20		
	PAVED DRIVE 45'	37+09			
	C.B.	37+34	C.B. 54' WIDE		
		37+66	PAVED DRIVE 40'		
	PAVED DRIVE 50'	38+00			
	PAVED DRIVE 50'	39+05			
		39+30	20' FIELD ENT		
	PAVED DRIVE 26'	40+03			
	ISLAND HOULTON PLAZA ENT	40+20	END THIS SECTION		

STP-1138(800)X
Houlton
Rte 1
PPM

Pavement Marking Info

Description	Station
DO NOT PASS	O
GAP	1+30
DO NOT PASS	1+50
GAP	7+05
DO NOT PASS	7+40
GAP	18+10
DO NOT PASS	18+45
GAP	25+60
DO NOT PASS	26+00
GAP	39+90
PASS BOTH WAYS	156+29
PASS LEFT	231+75

Construction Notes

202.202 REMOVING PAVEMENT SURFACE

Station 37+50± to 40+20 - Mill to a 1/4 inch per foot cross slope using a 9 inch milled reveal on granite curb as a control.

Station 0+00 to 2+50± - Mill to a depth of 3 inches full width

202.203 PAVEMENT BUTT JOINTS

Side Roads, Along paved drives and end of sidewalks, as required
and as directed by Resident. On Smyrna St.care should be taken as not to damage traffic control loops.
Approximately 66 Paved Drives

409.15 BITUMINOUS TACK COAT APPLIED

Surface will be tacked before each coarse of HMA

411.10 UNTREATED AGGR SURFACE CRS, TRUCK MEASURE

Use in driveways, field and lawn entrances, as directed by Resident.

411.12 CRUSHED STONE SURFACE

Use on crushed stone drives as directed by Resident
1 crushed stone driveway

604.18 ADJUST MANHOLE OR CB TO GRADE

Side	Station	DESC
LT	+10.0	C.B.
RT	+58.0	C.B.
LT	1+48.0	C.B.
LT	1+54.0	C.B.
RT	1+86.0	C.B.
LT	4+15.0	C.B.
RT	5+00.0	C.B.
LT	7+18.0	C.B.
LT	7+62.0	MANHOLE
LT	7+67.0	C.B.
RT	8+01.0	C.B.
LT	8+16.0	MANHOLE
LT	7+86.0	MANHOLE

LT	8+29.0	C.B.
LT	10+50.0	C.B.
RT	10+56.0	MANHOLE
LT	10+65.0	C.B.
RT	10+71.0	C.B.
RT	13+27.0	MANHOLE
RT	13+40.0	C.B.
LT	14+67.0	C.B.
RT	15+85.0	MANHOLE
RT	15+97.0	C.B.
LT	18+25.0	C.B.
RT	18+56.0	MANHOLE
RT	18+76.0	C.B.
LT	19+60.0	MANHOLE
RT	21+00.0	MANHOLE
RT	21+08.0	C.B.
LT	21+25.0	C.B.
RT	23+23.0	MANHOLE
RT	25+50.0	C.B.
LT	25+70.0	C.B.
LT	27+76.0	C.B.
RT	27+76.0	C.B.
LT	29+48.0	C.B.
RT	29+48.0	C.B.
LT	30+50.0	C.B.
RT	30+50.0	C.B.
LT	32+02.0	C.B.
RT	32+02.0	C.B.
LT	36+06.0	C.B.
RT	36+10.0	C.B.
RT	37+34.0	C.B.
LT	37+34.0	C.B.
LT	39+40.0	MANHOLE

Town Houlton
Project # 11388.00
Level #PPM, Rte # 1

GENERAL NOTES

1 Construct Butt Joints at all paved drives and entrances as directed by the Resident.

2 Where deemed necessary by the Resident, winter sand shall be removed from the edges of shoulders and placed in designated areas or disposed of. Payment will be made under the appropriate hourly rental items.

3 The Contractor shall place suitable existing material, or other material acceptable to the Resident, on all pavement edges to allow no greater than a 1½ in drop-off and be graded to 3:1 or flatter. Payment to be incidental to the contract.

4 All waste material not used on the project shall be disposed of off the project in waste areas approved by the Resident

5 Any damage to the slopes caused by the Contractor's equipment, personnel, or operation shall be repaired to the satisfaction of the Resident. All work, equipment and materials required to make repairs shall be at the Contractor's expense.

6 Item # 411.10, Untreated Aggregate Surface Course, may also meet the gradation requirements of item # 204.20, Add Shoulder Aggregate.

7 Any necessary cleaning of existing pavement prior to paving shall be incidental to the related paving items.

8 All existing paved shoulders and widenings to be resurfaced as directed by the Resident.

9 Shoulder shim shall taper to 0 in at face of existing curb and guardrail.

10 Stations referenced are approximate.

11 All work shall be done in accordance with the Maine Department of Transportation's Best Management Practices for Erosion Control & Sediment Control, January, 2000.

12 MDOT will final stripe the project. The Contractor is responsible for transferring the existing striping pattern to the surface course.

13 Pavement millings will become property of the Maine Dept. of Transportation. The millings will be delivered by the contractor to the Worthley pit off rte 2 in New Limerick. The pavement millings will be stockpiled at the site into one neat confined pile. No additional payment will be made for equipment necessary to complete the stockpiling.

STATE OF MAINE
DEPARTMENT OF TRANSPORTATION

LOCATION MAP

HOULTON-LITTLETON
AROOSTOOK COUNTY
ROUTE 1

STP-1138(800)X
NH-1138(700)E
NH-1138(900)E
NH-A139(000)E

HOT MIX ASPHALT OVERLAY PPM
MILL & FILL LEVEL II
PROJECT LENGTH : 6.71 MILES

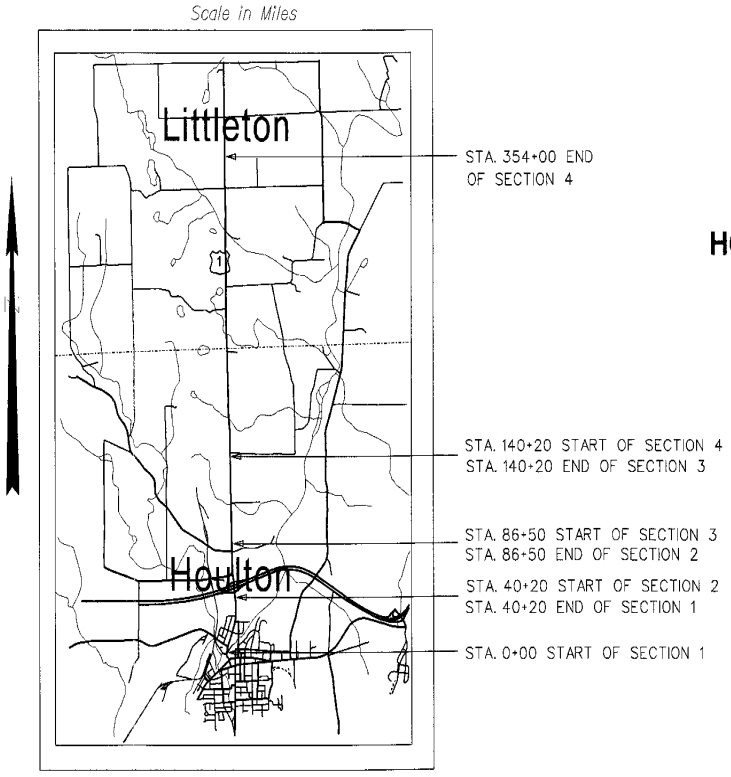

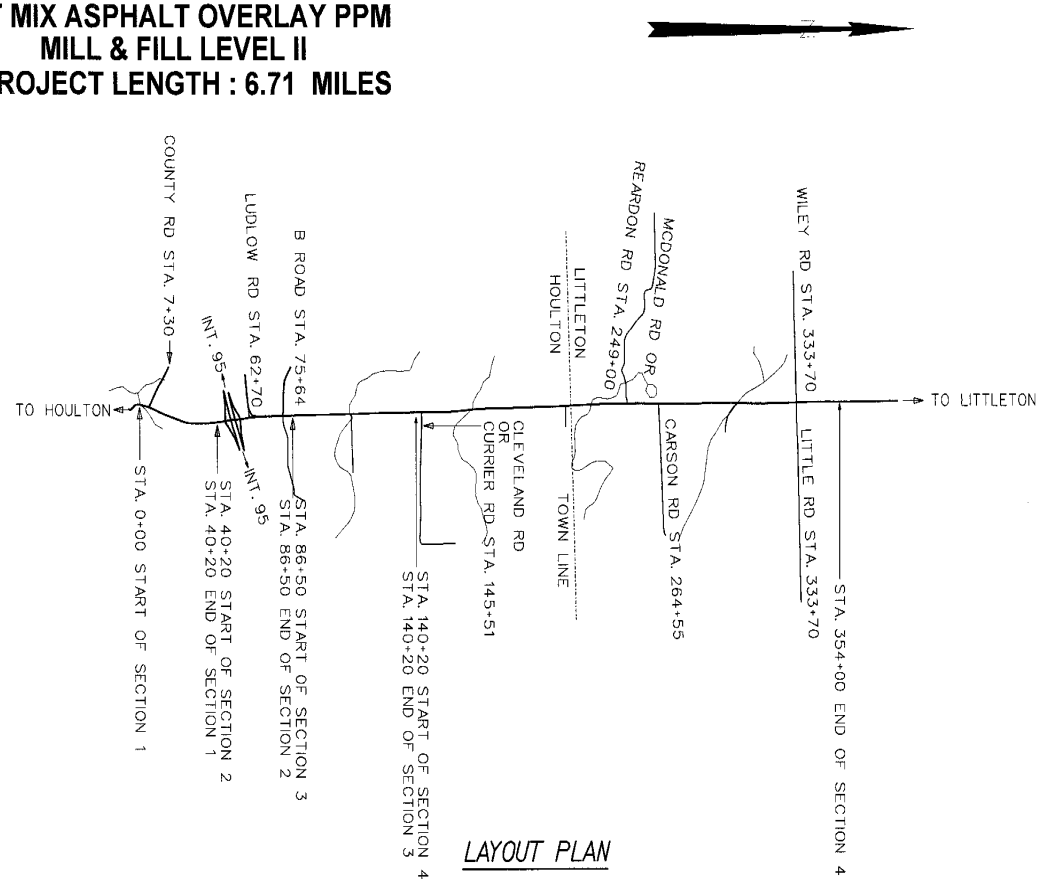

LAYOUT PLAN

TRAFFIC DATA	Sec. 1	Sec. 2
	US 1 (NORTH ST) N/O	US 1 S/O
Prep By: ALL	I95 RAMPS @ CUL	I-95 RAMPS
Current (2004) AADT	16410	15620
Future (2016) AADT	18380	17490
DHV - % of AADT	10	10
Design Hour Volume	1969	1874
% Heavy Trucks (AADT)	7	8
% Heavy Trucks (DHV)	7	7
Directional Distribution (DHV)	55	50
18 kip Equivalent P 2.0	1351	1469
18 kip Equivalent P 2.5	1287	1400
Design Speed (mph)	35	35

STATE OF MAINE
DEPARTMENT OF TRANSPORTATION
APPROVED
COMMISSIONER: DATE 2/17/04
CHIEF ENGINEER: DATE 2/17/04

STATE OF MAINE — Brian Stewart Scott — 6640 — REGISTERED PROFESSIONAL ENGINEER

PROJECT INFORMATION	
PROGRAM	REGIONAL
PROJECT MANAGER	DERYLE SPONBERG
DESIGNER	
CONSULTANT	
PROJECT RESIDENT	
CONTRACTOR	
PROJECT COMPLETION DATE	

SIGNATURE
P.E. NUMBER 6640
DATE 2/13/04

HOULTON-LITTLETON
ROUTE 1
TITLE SHEET

SHEET NUMBER
1
OF 1

Remove Pavement Surface & Hot Mix Asphalt Pavement Sta 40+20 to 58+20+/-

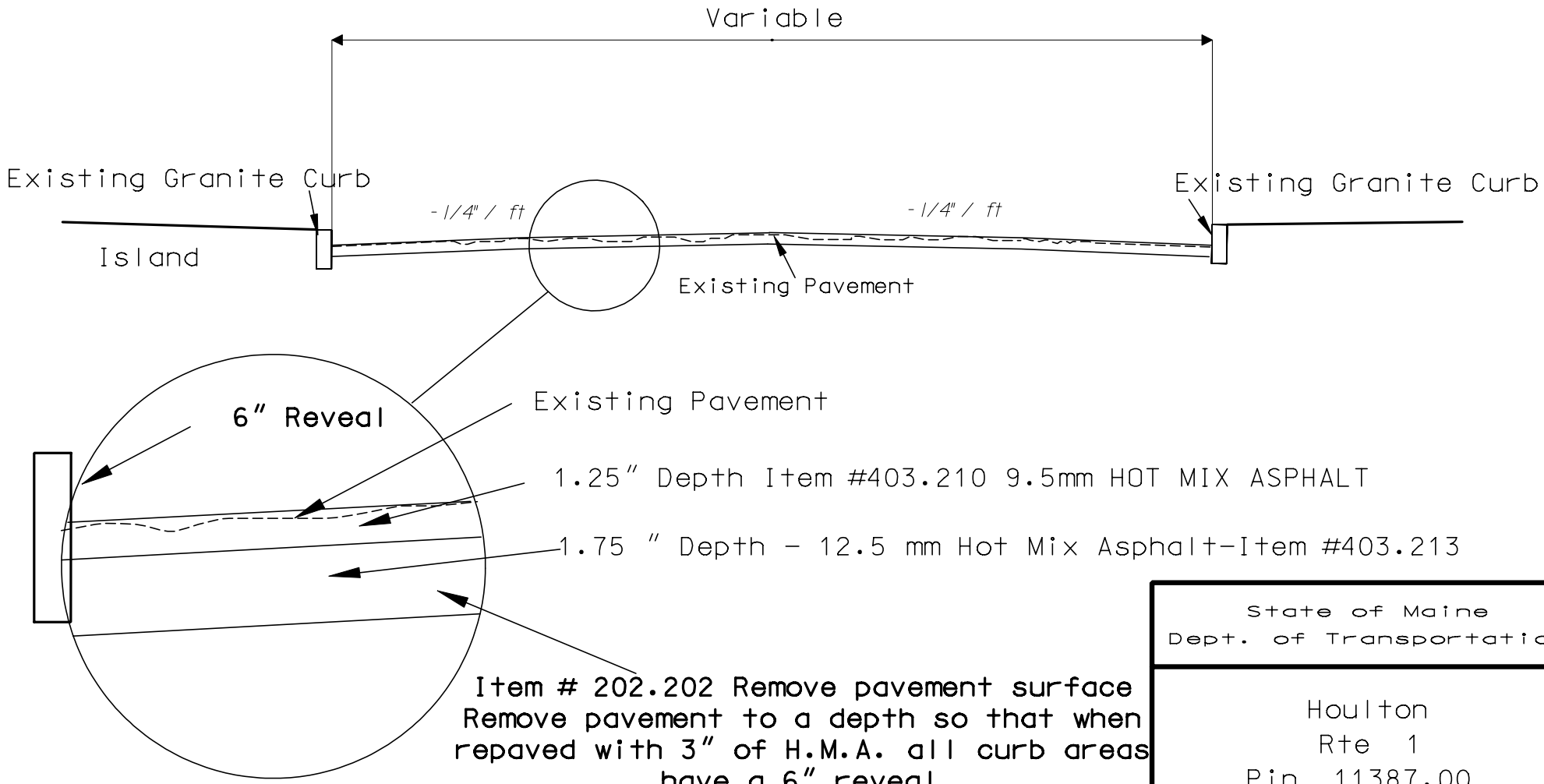

State of Maine
Dept. of Transportation

Houlton
Rte 1
Pin 11387.00

sheet 1 of 2

12/12/01

Remove Pavement Surface & Hot Mix Asphalt Pavement

Sta 58+20 to Sta 86+50

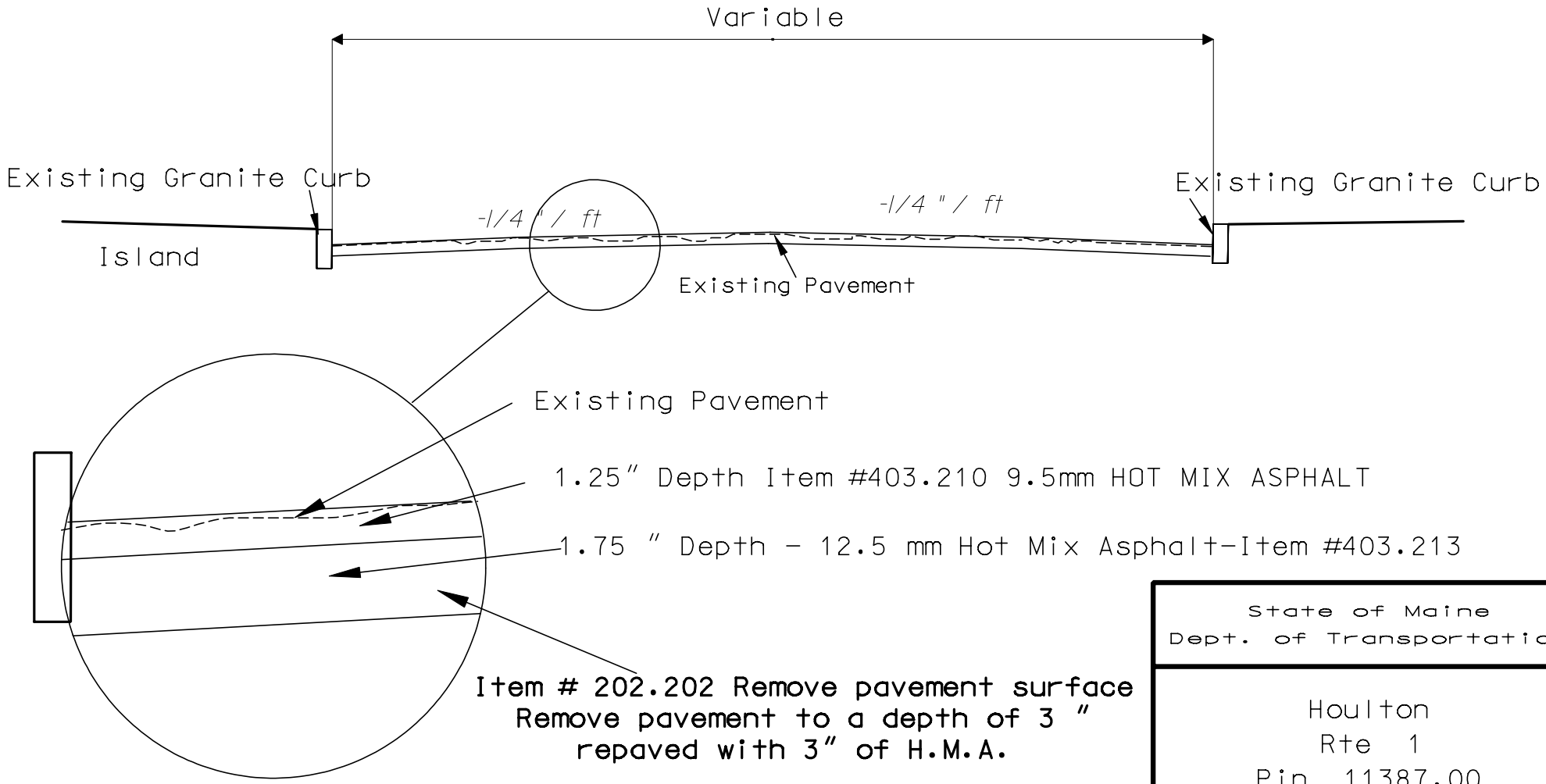

State of Maine
Dept. of Transportation

Houlton
Rte 1
Pin 11387.00

sheet 2 of 2

12/12/01

Pole #	Topo - Left	Station Feet	Topo - Right	Pole #
	ISLAND - HOULTON PLAZA	40+20	BEGIN	
	22' PAVED DRIVE	40+35		
		42+03	PAVED ENT (90)	
	C.B.	42+20		
	END OFF RAMP	43+10		35
		43+57	BEGIN MEDIAN ISLAND	
	C.B.	43+68	C.B.	
	C.B.	44+56	C.B.	
		45+70	BEGIN ON RAMP	
	C.B.	45+99		
		46+70	END ISLAND	
	C.B. BEGIN OFF RAMP	47+04		
		47+18	END ON RAMP	
		47+20	BEGIN ISLAND	
	C.B.	47+29	C.B.	
	2 C.B.S	50+70	C.B.	
		52+68	C.B.	
		53+68	END ISLAND	
	BEGIN ON RAMP	53+70		
		53+91	BEGIN OFF RAMP	
	C.B.	54+28	C.B.	
	END ON RAMP C.B.	55+20	C.B. END OFF RAMP	
	END ISLAND	56+11	C.B.	
		56+21	BEGIN ISLAND	
		57+23	END ISLAND	
	C.B.	57+27		
	BEGIN SIDE RD	57+50		
	C.B.	58+27		
		58+60	PAVED DRIVE 40	
	END SIDE RD	58+67		
	64' PAVED DR	58+97		
		59+06	50' PAVED DRIVE	
		60+41	50' PAVED DRIVE	
	90' PAVED DR	60+52		
		60+88	BEGIN ISLAND	
	M.H	61+70		
	C.B. BEGIN LUDLOW ROAD	61+73		
		61+93	END ISLAND	
	LUDLOW ROAD	62+68	75' PAVED ENT	
		63+12	C.B.	
		63+20	BEGIN ISLAND	
	END LUDLOW ROAD	63+53		
	M.H	64+20		
		64+54	END ISLAND	
		64+60	60' PAVED ENT	
		64+85	C.B.	
		65+40	C.B.	
	30' paved dr	65+80		
		66+18	PAVED DRIVE 58'	
	46 PAVED DR	66+23		
		66+50	C.B.	
POLE		66+93		Pole #
	50' PAVED	67+35		
		67+35	55' PAVED DR	
		68+10		48D
48		68+24		
		68+44	PAVED DR 60'	
	PAVED DRIVE 40'	68+49		
POLE		69+58	PAVED DRIVE 56'	
	PAVED DRIVE 130'	70+18		
		70+99	HYDRANT	
405/P50		71+12		
		71+71	PAVED DRIVE 78	
	PAVED DRIVE 40'	71+81		
	PAVED DR 42'	72+25		
51		72+47		
	PAVED DRIVE 42'	72+73		

		PAVED DR	73+50	PAVED DRIVE 42	
	52		73+70		
		PAVED DRIVE 45	73+40		
			74+40	PAVED DRIVE 42	
		PAVED DRIVE 40'	74+85		53S
	53		75+03		
			75+20	C.B.	
		B ROAD	75+64		
			75+76	ACCESS RD	
	54		76+12		
			76+78	PAVED DRIVE 42'	
		PAVED DRIVE 40'	77+17		
			77+45	C.B.	
405/55			77+87	PAVED DRIVE 42'	
		GRAVEL ENT 40'	79+60		
			79+70	C.B.	
			79+90		56S
	56		79+97		
			80+07	GRAVEL DRIVE 50'	
			82+28		57X
	57		82+34		
			82+54	C.B.	
			83+70	GRAVEL DRIVE 50'	
	58		84+94		
			86+50	END	

STP-1138(700)X
Houlton
Rte 1
PPM / MILL&FILL

Pavement Marking Info

Description	Station	scription
DO NOT PASS	76+04	
PASS RIGHT	85+74	
PASS RIGHT	86+50	

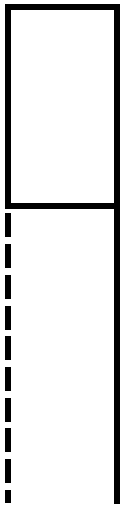

Construction Notes

202.202 REMOVING PAVEMENT SURFACE

Station 40+20 to 58+20± - Mill to a 1/4 inch per foot cross slope using a 9 inch milled reveal on granite curb as a control.

Station 58+20± to 86+50± - Mill to a depth of 3 inches full width

202.203 PAVEMENT BUTT JOINTS

Side Roads, Along paved drives and end of sidewalks, as required and as directed by Resident
Approximately 29 Paved Drives

409.15 BITUMINOUS TACK COAT APPLIED

Surface will be tacked before each coarse of HMA

411.10 UNTREATED AGGR SURFACE CRS, TRUCK MEASURE

Use in driveways, field and lawn entrances, as directed by Resident.

411.12 CRUSHED STONE SURFACE

Use on crushed stone drives as directed by Resident

604.1800 ADJUST MANHOLE OR CB TO GRADE

Side	Station	Description	Quantity
LT	42+20.0	Catch Basin	1
LT& RT	43+68.0	Catch Basin	2
LT& RT	44+56.0	Catch Basin	2
LT	45+99.0	Catch Basin	1
LT	47+04.0	Catch Basin	1
LT& RT	47+29.0	Catch Basin	2
LT& RT	50+70.0	Catch Basin	3
RT	52+68.0	Catch Basin	1
LT& RT	54+28.0	Catch Basin	2
LT& RT	55+20.0	Catch Basin	2

Construction Notes

604.1800 ADJUST MANHOLE OR CB TO GRADE Cont.

RT	56+11.0	Catch Basin	1
LT	57+27.0	Catch Basin	1
LT	58+27.0	Catch Basin	1
RT	63+12.0	Catch Basin	1
LT	61+70.0	Man Hole	1
LT	61+73.0	Catch Basin	1
LT	64+20.0	Man Hole	1
RT	64+85.0	Catch Basin	1
RT	65+40.0	Catch Basin	1
RT	66+50.0	Catch Basin	1
RT	75+20.0	Catch Basin	1
RT	77+45.0	Catch Basin	1
RT	79+20.0	Catch Basin	1
RT	82+54.0	Catch Basin	1
REST AREA		M.H.	1
Undetermined Location			2
		Total =	**34 ea.**

609.31 CURB TYPE 3

Side	Station	Station
Rt	77+00.0	77+68.0
Rt	79+50.0	79+90.0
Rt	82+40.0	83+48.0

Remove existing curb to raise C.B.,S

609.4000 RESET CURB TYPE 5

Location
Undetermined Locations as may be needed after removing pavement surface

Length (feet)
100.0

643.86 TRAFFIC SIGNAL LOOP DETECTOR

Replace existing loops in milled areas.
Loops shall be installed prior to the surface course of HMA

GENERAL NOTES

1. All joints between existing and proposed hot bituminous pavement shall be butted. Payment shall be made under Item 202.203 Pavement Butt Joint.

2. Construct Butt Joints at all paved drives and entrances as directed by the Resident.

3. Where deemed necessary by the Resident, winter sand shall be removed from the edges of shoulders and placed in designated areas or disposed of. Payment will be made under the appropriate hourly rental items.

4. All waste material not used on the project shall be disposed of off the project in waste areas approved by the Resident

5. Any damage to the slopes caused by the Contractor's equipment, personnel, or operation shall be repaired to the satisfaction of the Resident. All work, equipment and materials required to make repairs shall be at the Contractor's expense.

6. Item # 411.10, Untreated Aggregate Surface Course, may also meet the gradation requirements of item # 204.20, Add Shoulder Aggregate.

7. Any necessary cleaning of existing pavement prior to paving shall be incidental to the related paving items.

8. All existing paved shoulders and widenings to be resurfaced as directed by the Resident.

9. Backing up bituminous curb is incidental to the curb items. In areas where new bituminous curb is designated to replace existing, the removal of the old bituminous curb shall be incidental to the new curb.

10. "Undetermined Locations" shall be determined by the Resident.

11. Stations referenced are approximate.

12. Grind transition tapers at Catch Basins under Item No. 202.203, Pavement Butt Joints, as directed by the Resident.

13. All work shall be done in accordance with the Maine Department of Transportation's Best Management Practices for Erosion Control & Sediment Control, January, 2000.

14. MDOT will final stripe the project. The Contractor is responsible for transferring the existing striping pattern to the surface course.

15. All ramps to be milled to the beginning of type 5 curb.

16. Pavement millings will become property of the Maine Dept. of Transportation. The millings will be delivered by the contractor to the Worthley pit off rte 2 in New Limerick. The pavement millings will be stockpiled at the site into one neat confined pile. No additional payment will be made for equipment necessary to complete the stockpiling.

STATE OF MAINE
DEPARTMENT OF TRANSPORTATION

LOCATION MAP

HOULTON-LITTLETON
AROOSTOOK COUNTY
ROUTE 1

STP-1138(800)X
NH-1138(700)E
NH-1138(900)E
NH-A139(000)E

HOT MIX ASPHALT OVERLAY PPM
MILL & FILL LEVEL II
PROJECT LENGTH : 6.71 MILES

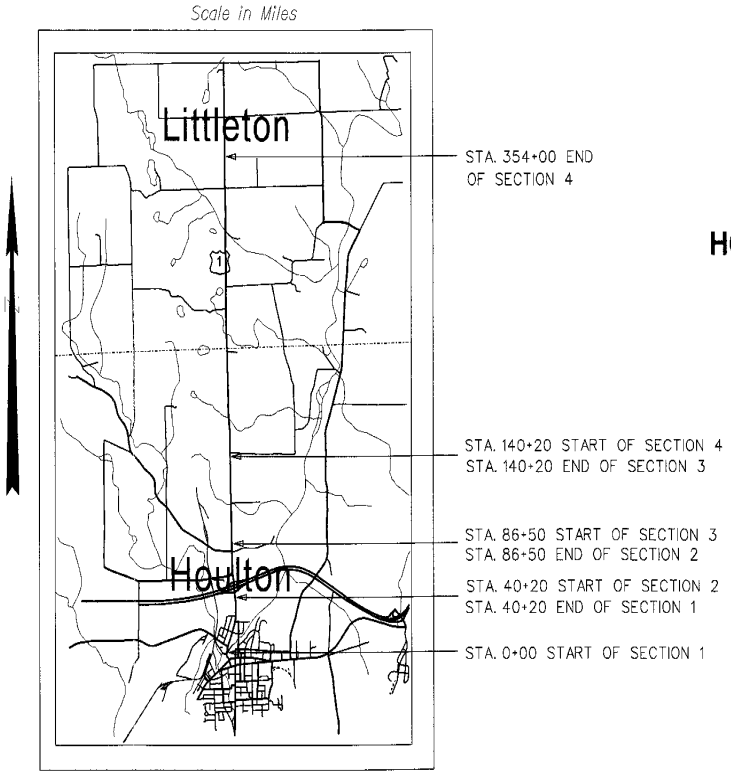

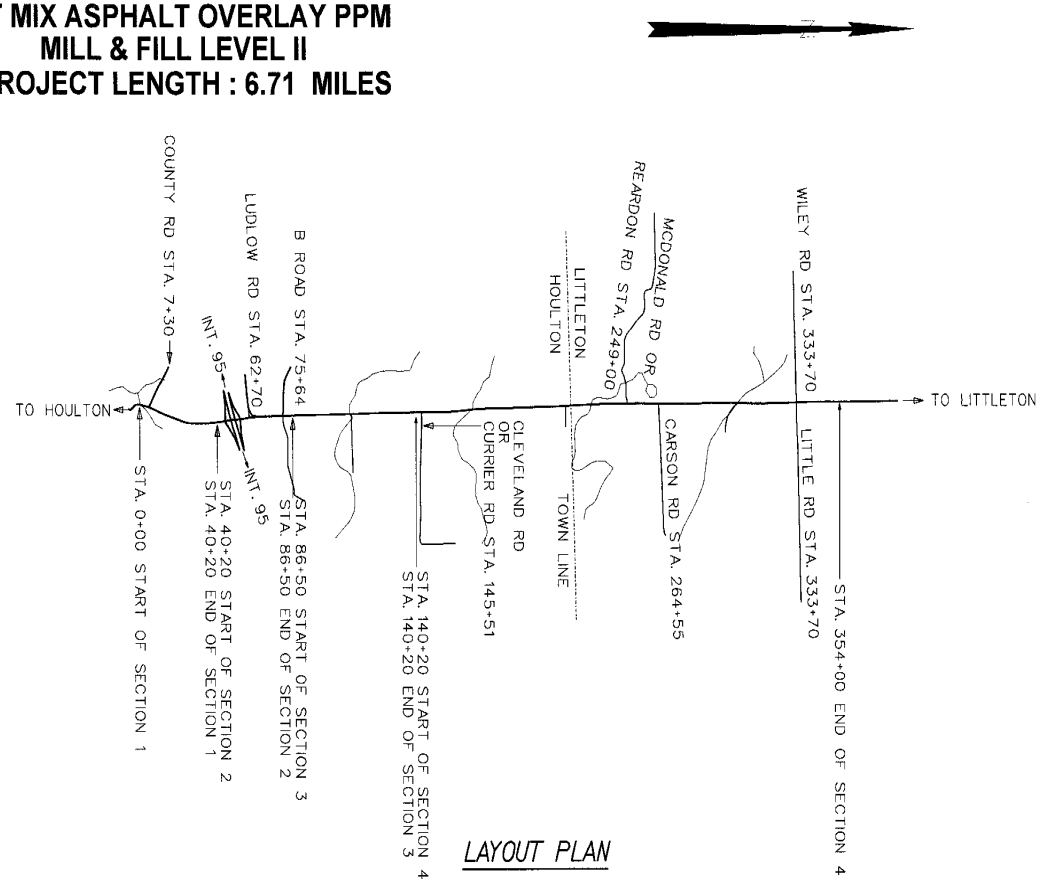

LAYOUT PLAN

TRAFFIC DATA	Sec. 1	Sec. 2
	US 1 (NORTH ST) N/O	US 1 S/O
Prep By: ALL	I95 RAMPS @ CUL	I-95 RAMPS
Current (2004) AADT	16410	15620
Future (2016) AADT	18380	17490
DHV - % of AADT	10	10
Design Hour Volume	1969	1874
% Heavy Trucks (AADT)	7	8
% Heavy Trucks (DHV)	7	7
Directional Distribution (DHV)	55	50
18 kip Equivalent P 2.0	1351	1469
18 kip Equivalent P 2.5	1287	1400
Design Speed (mph)	35	35

STATE OF MAINE
DEPARTMENT OF TRANSPORTATION
APPROVED
COMMISSIONER: DATE 2/17/04
CHIEF ENGINEER: DATE 2/17/04

STATE OF MAINE — Brian Stewart Scott — 6640 — REGISTERED PROFESSIONAL ENGINEER

PROJECT INFORMATION	
PROGRAM	REGIONAL
PROJECT MANAGER	DERYLE SPONBERG
DESIGNER	
CONSULTANT	
PROJECT RESIDENT	
CONTRACTOR	
PROJECT COMPLETION DATE	

SIGNATURE
P.E. NUMBER 6640
DATE 2/13/04

HOULTON-LITTLETON
ROUTE 1
TITLE SHEET

SHEET NUMBER
1
OF 1

3/4" OVERLAY WITH VARIABLE DEPTH SHIM

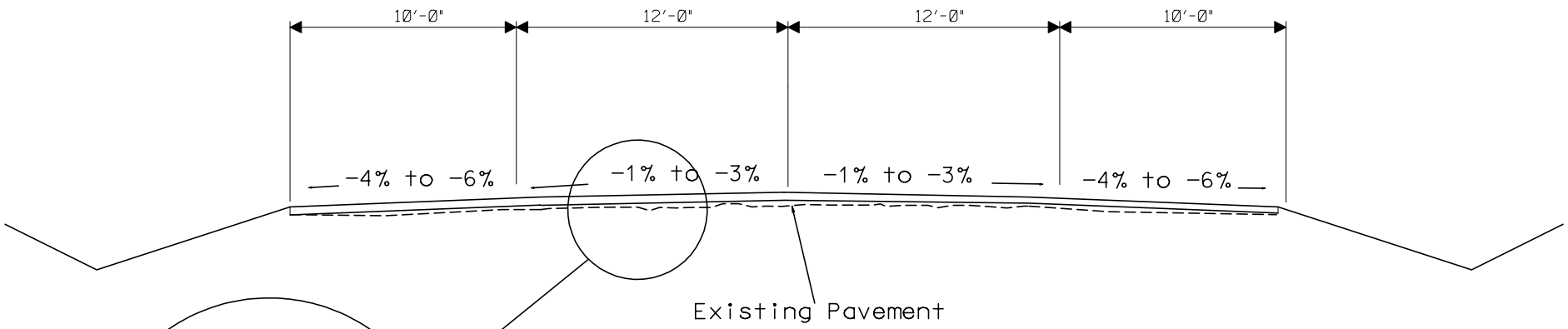

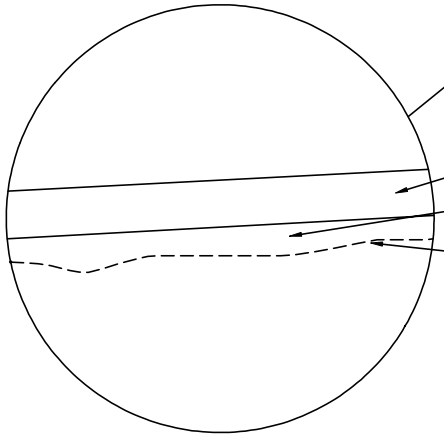

NORMAL SECTION

State of Maine
Dept. of Transportation

TYPICAL SECTIONS
HOULTON
PIN 11389.00

sheet 1 of 2

12/09/03

3/4 " OVERLAY WITH VARIABLE DEPTH SHIM SUPER ELEVATED SECTION

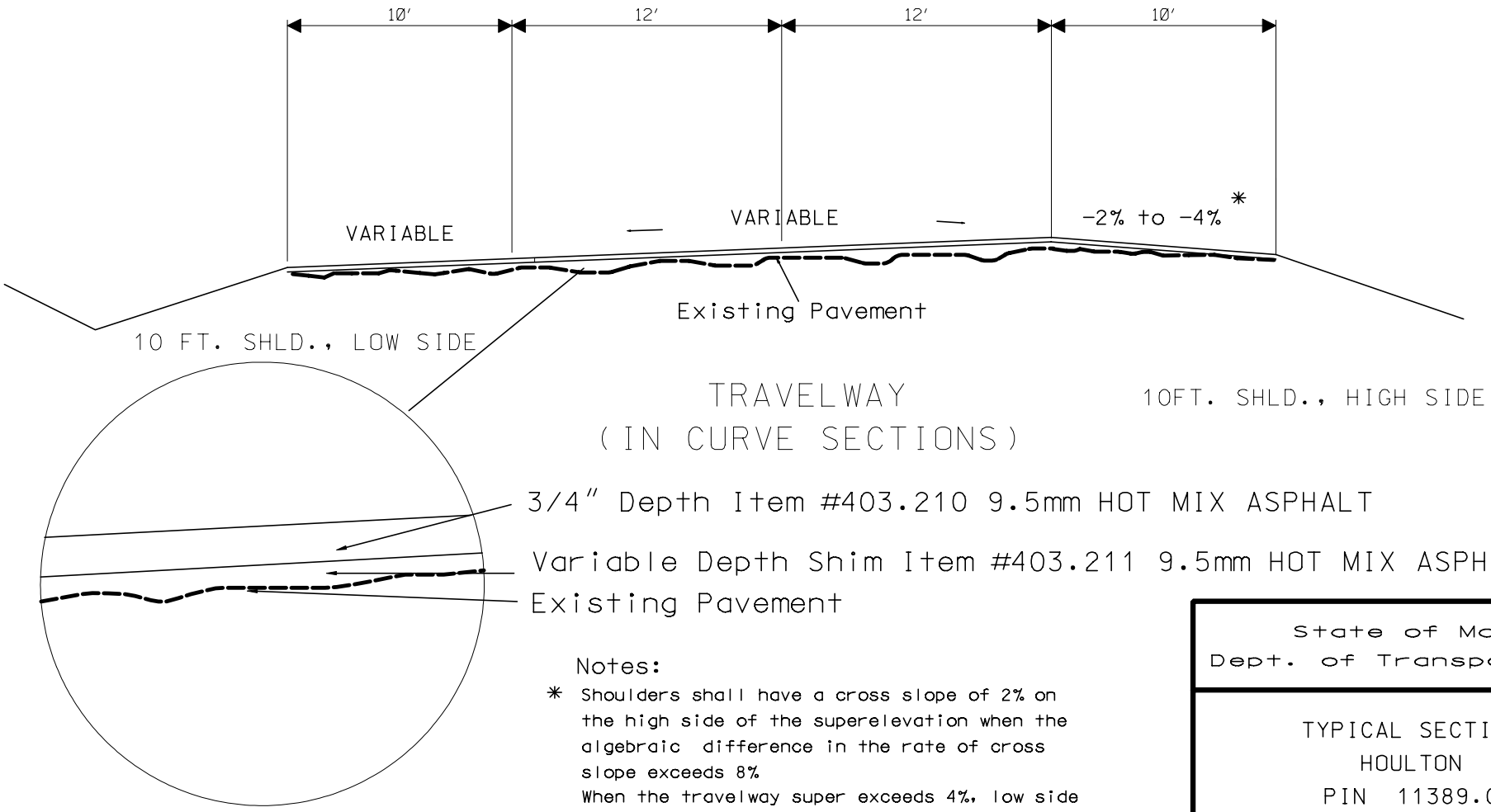

Notes:

* Shoulders shall have a cross slope of 2% on the high side of the superelevation when the algebraic difference in the rate of cross slope exceeds 8%
When the travelway super exceeds 4%, low side shoulder slope will have same slope as travelway.

State of Maine
Dept. of Transportation

TYPICAL SECTIONS
HOULTON
PIN 11389.00

Sheet 2 of 2

12/18/03

STP-1138(900)X
Houlton
Route 1
PPM/MILL-FILL

Pole #	Topo - Left	Station Feet	Topo - Right	Pole #
		86+50	BEGIN	
		87+10	GRAVEL DRIVE	
59		87+28		
		88+09	GRAVEL DRIVE	
405/60		89+82		
	PAVED DRIVE	90+76		
		92+34	PAVED DRIVE	
61		92+30		
		92+70	BEGIN CURB	
	GRAVEL DRIVE	92+85		
	PAVED DRIVE	92+94		
62		94+35		
		94+80	END CURB	
		94+95	PAVED DRIVE	
	PAVED DRIVE	95+46		
	STONE DRIVE	96+45		
63		97+10		
64		98+90		
	BEGIN CURB	99+30		
		100+75		65S
		100+90	PAVED DRIVE	
P91/405/65		101+01		
	PAVED DRIVE	101+35		
	BEGIN CURB	101+60		
	C.B.	101+70		
	END CURB	102+23		
	PAVED DRIVE	102+44		
	BEGIN CURB	102+68		
		103+10	PAVED DRIVE	
66		103+11		
	END CURB	103+15		
	PAVED DRIVE	103+31		
	BEGIN CURB	103+47		
		103+48		POLE
66 1/2	END CURB	103+73		
	PAVED DRIVE	103+85		
	END CURB	104+03		
	C.B.	104+20		
	END CURB	104+41		
	PAVED DRIVE	104+51		
	BEGIN CURB	105+00		
67		105+30		
	C.B.	105+95		
	END CURB	105+98		
	GRAVEL DRIVE	106+34		
68		107+72		
	GRAVEL DRIVE	108+22		
	I-95 SIGN	109+95	HIDDEN ROAD	
69		110+14		
		111+14	PAVED DRIVE	
	PAVED DRIVE	112+39	CB	
405/70		112+56		
		112+70	PAVED DRIVE	
	PAVED DRIVE	114+10		
		114+60	GRAVEL DRIVE	
71		115+00		
	PAVED DRIVE	115+50		
72		117+35		
73		119+40		73S
	PAVED DRIVE	119+90		
74/802		121+92		
		122+19		74S
	PAVED DRIVE	122+92		
	PAVED DRIVE	124+25		
	PAVED DRIVE	125+27		
	PAVED DRIVE	126+20		
		126+90		76S
76		127+00		
	PAVED DRIVE	127+30		
	PAVED DRIVE	128+30		
		128+70	PAVED DRIVE	
	PAVED DRIVE	128+90		
		129+30	GRAVEL DRIVE	
		129+66		77D1
77		129+76		
	PAVED DRIVE	131+64		
78		131+96		
79 1/2		134+26		79 1/2 S
	PAVED DRIVE	134+39		
	PAVED DRIVE	135+58		
LIGHT		135+71		
POLE		136+25		
	GRAVEL DRIVE	136+62		
	GRAVEL DRIVE	138+27		
81		138+80		
	PAVED DRIVE	139+10		
		140+20	END	

STP-1138(900)X
Houlton
Route 1
PPM/MILL-FILL

Pavement Marking Info

Description	Station
PASS RIGHT	86+50
PASS BOTH WAYS	93+04
PASS BOTH WAYS	140+20

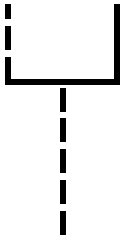

Construction Notes

202.203 PAVEMENT BUTT JOINTS

Mainline, Side Roads, Along paved drives and end of sidewalks, as required and as directed by Resident
Approximately 42 Paved Drives

409.15 BITUMINOUS TACK COAT APPLIED

Surface will be tacked before each coarse of HMA

411.10 UNTREATED AGGR SURFACE CRS, TRUCK MEASURE

Use in driveways, field and lawn entrances, as directed by Resident.
11 driveways and entrances

411.12 CRUSHED STONE SURFACE

Use on crushed stone drives as directed by Resident
1 crushed stone driveway

604.18 ADJUST MANHOLE OR CB TO GRADE

Side	Station	DESC	Quantity
LT	101+70.0	C.B.	1
LT	104+20.0	C.B.	1
LT	105+95.0	C.B.	1
RT	112+39.0	C.B.	1

609.31 CURB TYPE 3

101+62 -101+82 Lt
104+10 -104+30 Lt
105+85 - 106+03 Lt
112+29 - 112+49 Rt

These areas are where catch basins are to be raised to grade

GENERAL NOTES

1. All joints between existing and proposed hot bituminous pavement shall be butted. Payment shall be made under Item 202.203 Pavement Butt Joint.

2. Construct Butt Joints at all paved drives and entrances as directed by the Resident.

3. Where deemed necessary by the Resident, winter sand shall be removed from the edges of shoulders and placed in designated areas or disposed of. Payment will be made under the appropriate contract items.

4. The Contractor shall place suitable existing material, or other material acceptable to the Resident, on all pavement edges to allow no greater than a 40 mm [1 ½ in] drop-off and be graded to 3:1 or flatter. Payment to be incidental to the contract.

5. All waste material not used on the project shall be disposed of off the project in waste areas approved by the Resident

6. Any damage to the slopes caused by the Contractor's equipment, personnel, or operation shall be repaired to the satisfaction of the Resident. All work, equipment and materials required to make repairs shall be at the Contractor's expense.

7. A 3 ft paved lip shall be placed at all gravel entrances, except woods and field entrances, unless otherwise directed by the Resident.

8. Item # 411.10, Untreated Aggregate Surface Course, may also meet the gradation requirements of item # 204.20, Add Shoulder Aggregate.

9. Any necessary cleaning of existing pavement prior to paving shall be incidental to the related paving items.

10. All existing paved shoulders and widenings to be resurfaced as directed by the Resident.

11. Shoulder shim shall taper to 0 mm [0 in] at face of existing curb and guardrail.

12. Backing up bituminous curb is incidental to the curb items. In areas where new bituminous curb is designated to replace existing, the removal of the old bituminous curb shall be incidental to the new curb.

13. "Undetermined Locations" shall be determined by the Resident.

14. Stations referenced are approximate.

GENERAL NOTES

15. Grind transition tapers at Catch Basins under Item No. 202.203, Pavement Butt Joints, as directed by the Resident.

16. All work shall be done in accordance with the Maine Department of Transportation's Best Management Practices for Erosion Control & Sediment Control, January, 2000.

17. MDOT will final stripe the project. The Contractor is responsible for transferring the existing striping pattern to the surface course.

STATE OF MAINE
DEPARTMENT OF TRANSPORTATION

LOCATION MAP

HOULTON-LITTLETON
AROOSTOOK COUNTY
ROUTE 1

STP-1138(800)X
NH-1138(700)E
NH-1138(900)E
NH-A139(000)E

HOT MIX ASPHALT OVERLAY PPM
MILL & FILL LEVEL II
PROJECT LENGTH : 6.71 MILES

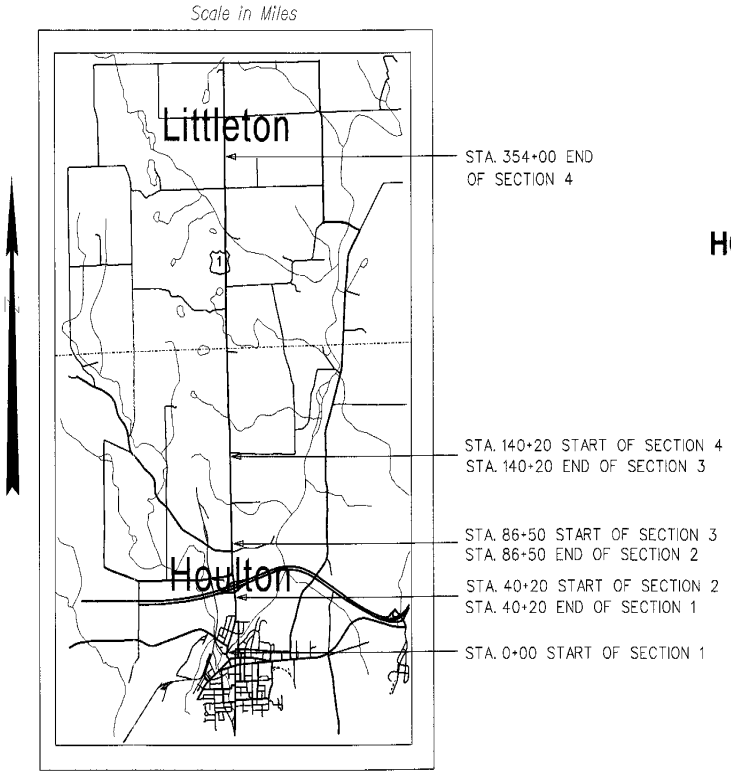

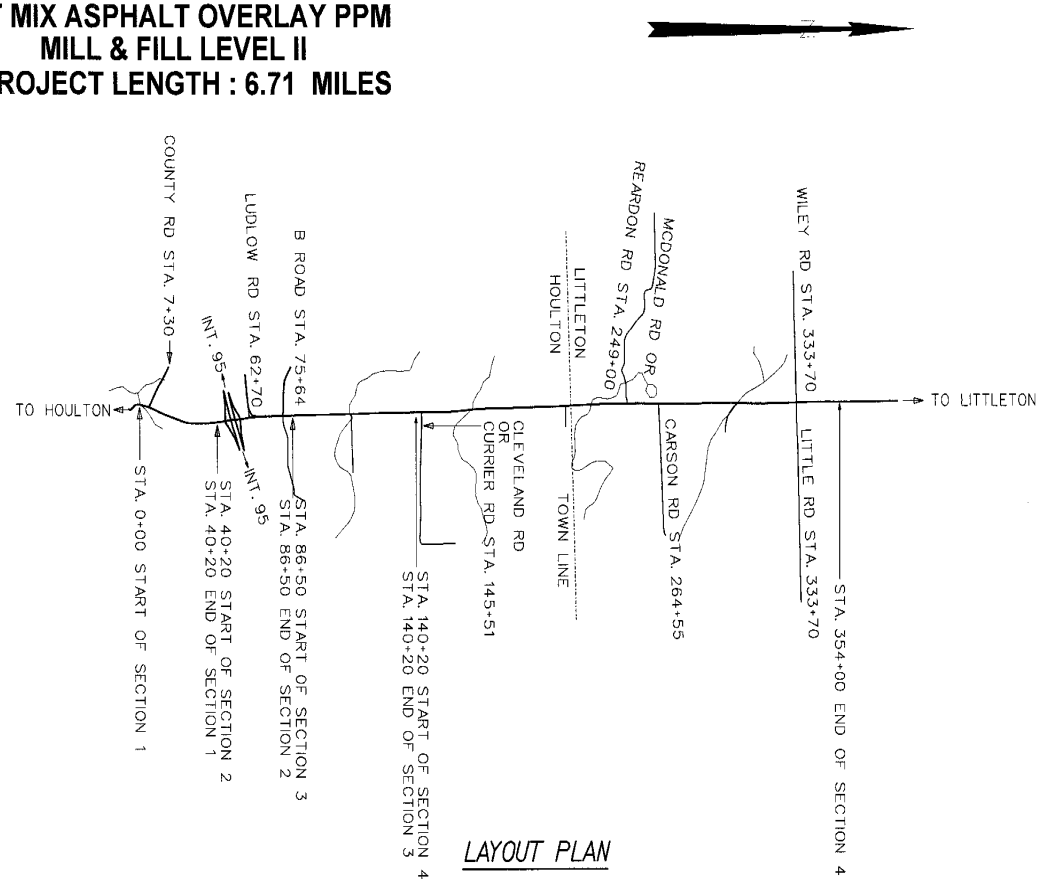

LAYOUT PLAN

TRAFFIC DATA	Sec. 1	Sec. 2
	US 1 (NORTH ST) N/O	US 1 S/O
Prep By: ALL	I95 RAMPS @ CUL	I-95 RAMPS
Current (2004) AADT	16410	15620
Future (2016) AADT	18380	17490
DHV - % of AADT	10	10
Design Hour Volume	1969	1874
% Heavy Trucks (AADT)	7	8
% Heavy Trucks (DHV)	7	7
Directional Distribution (DHV)	55	50
18 kip Equivalent P 2.0	1351	1469
18 kip Equivalent P 2.5	1287	1400
Design Speed (mph)	35	35

STATE OF MAINE
DEPARTMENT OF TRANSPORTATION
APPROVED
COMMISSIONER: DATE 2/17/04
CHIEF ENGINEER: DATE 2/17/04

STATE OF MAINE — Brian Stewart Scott — 6640 — REGISTERED PROFESSIONAL ENGINEER

PROJECT INFORMATION	
PROGRAM	REGIONAL
PROJECT MANAGER	DERYLE SPONBERG
DESIGNER	
CONSULTANT	
PROJECT RESIDENT	
CONTRACTOR	
PROJECT COMPLETION DATE	

SIGNATURE
P.E. NUMBER 6640
DATE 2/13/04

HOULTON-LITTLETON
ROUTE 1
TITLE SHEET

SHEET NUMBER
1
OF 1

3/4" OVERLAY WITH VARIABLE DEPTH SHIM

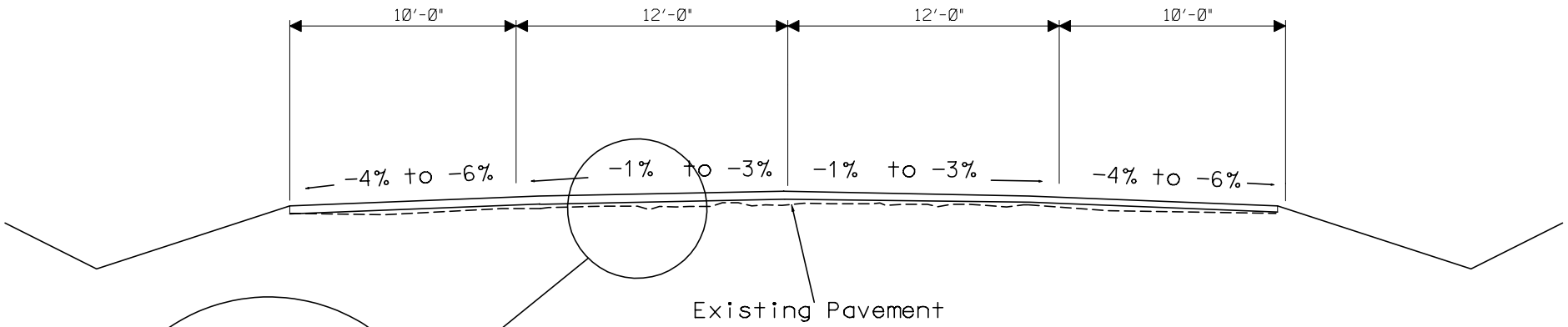

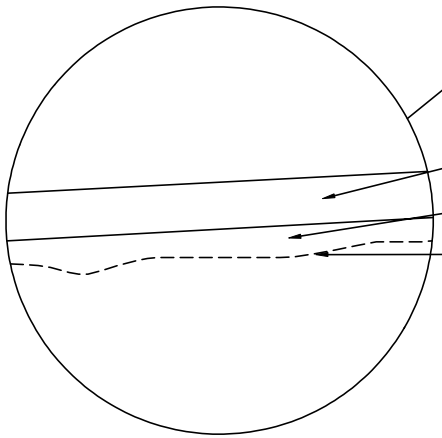

NORMAL SECTION

State of Maine
Dept. of Transportation

TYPICAL SECTIONS
HOULTON - LITTLETON
PIN 11390.00

sheet 1 of 3

12/09/03

3/4" OVERLAY WITH VARIABLE DEPTH SHIM
SUPER ELEVATED SECTION

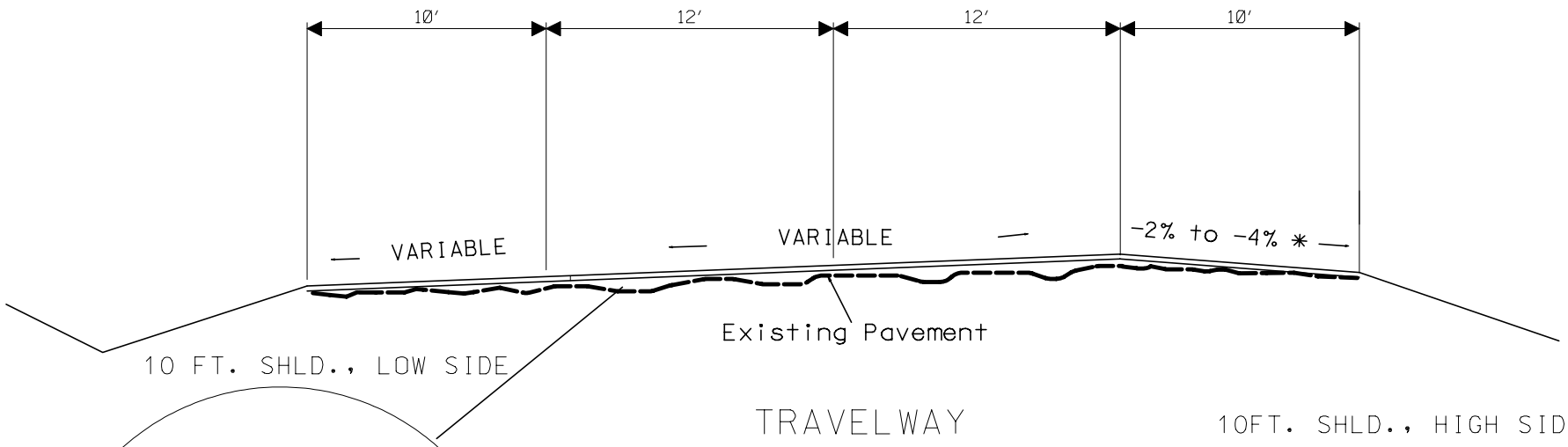

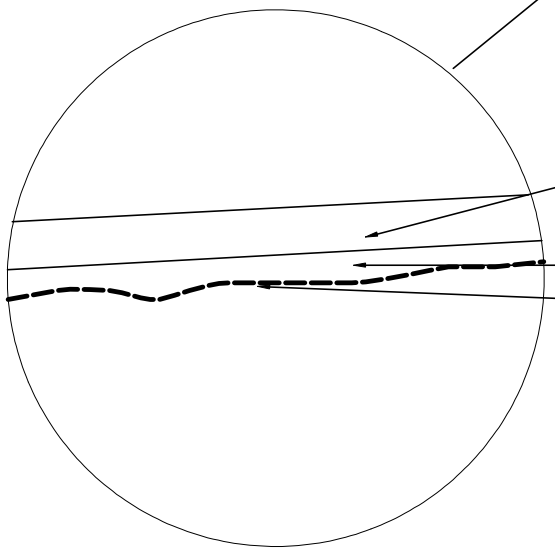

3/4" Depth Item #403.210 9.5mm HOT MIX ASPHALT

Variable Depth Shim Item #403.211 9.5mm HOT MIX ASPHALT

Existing Pavement

Notes:

* Shoulders shall have a cross slope of 2% on the high side of the superelevation when the algebraic difference in the rate of cross slope exceeds 8%
When the travelway super exceeds 4%, low side shoulder slope will have same slope as travelway.

State of Maine
Dept. of Transportation

TYPICAL SECTIONS
HOULTON - LITTLETON
PIN 11390.00

Sheet 2 of 3

12/18/03

3/4" HOT MIX ASPHALT OVERLAY

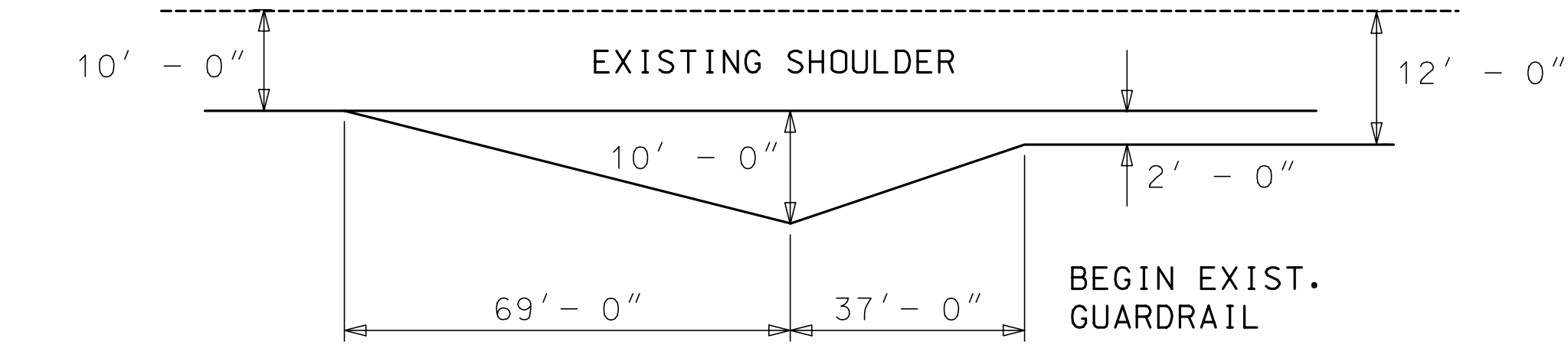

USED WITH EXISTING PAVEMENT ON SHOULDER

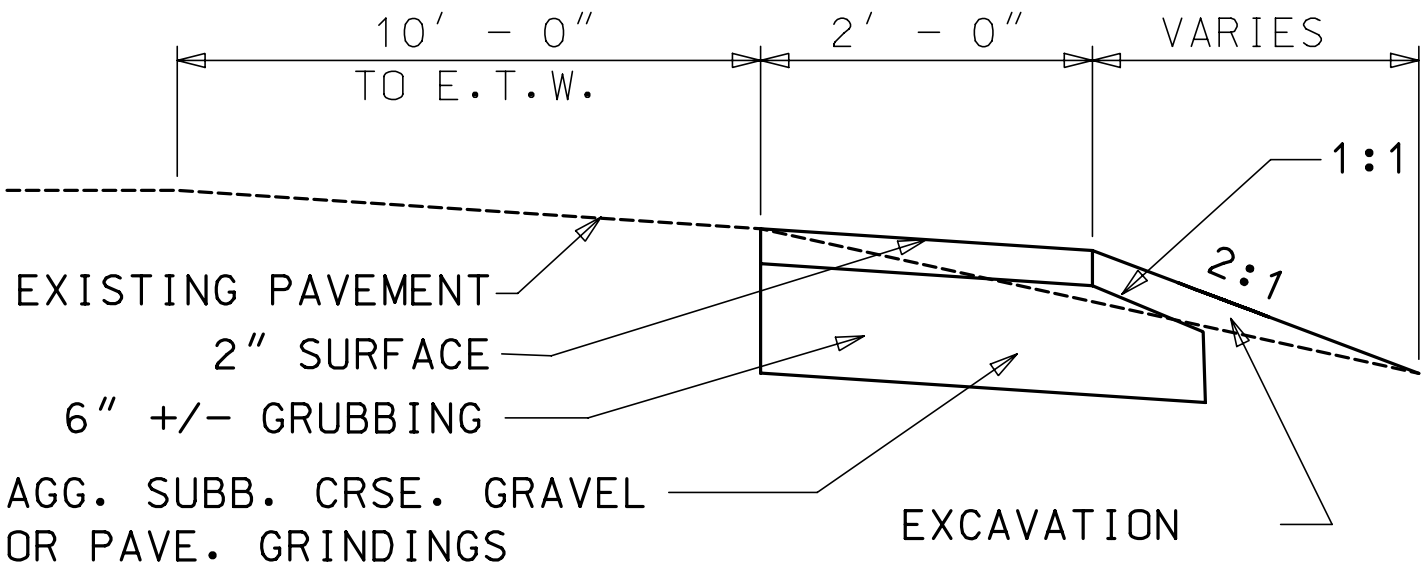

STATE OF MAINE
DEPARTMENT OF TRANSPORTATION

SHLDR. WIDENINGS
HOULTON-LITTLETON
PIN 11390.00

SHEET 3 OF 3

Pole #	Topo - Left	Station Feet	Topo - Right	Pole #
		140+20	BEGIN	
		140+70	STONE DRIVE	
82		141+27		
		141+75	PAVED DRIVE	
83		143+10		83D
	LONDON ROAD	145+29		
80/84		145+51	CURRIER ROD PAVED	
		145+72		Pole #
		146+45	PAVED DRIVE	
		147+49	PAVED DRIVE	
405/85		147+88		
		148+95	GRAVEL DRIVE	
86		150+28		
87		152+83		
	GRAVEL DRIVE	153+17		
	GRAVEL DRIVE	154+55		
88		155+26		GUY
	PAVED DRIVE	156+66		
89		157+88	89S	
	PAVED DRIVE	158+17		
	FIELD ENTRANCE	158+90		
		159+04	PAVED DRIVE	
405/90		160+20		90S
91		162+53		
		163+80	PAVED DRIVE	
	PAVED DRIVE	163+96		
		164+33	PAVED DRIVE	
92		164+93		
	PAVED DRIVE	165+29		
	PAVED DRIVE	167+05		
93		167+32		
	PAVED DRIVE	167+98		
	PAVED DRIVE	169+48		
94		169+87		94S
		169+95		SERVICE
405/95		172+40		
	GRAVEL DRIVE	173+53		
		174+46	GRAVEL DRIVE	
96		174+96		
	PAVED DRIVE	175+45		
	PAVED DRIVE	176+70	GRAVEL DRIVE	
		177+34	GRAVEL DRIVE	
97		177+65		
	PAVED DRIVE	178+19		
		178+54		97 1/2
		178+88	GRAVEL DRIVE	
98		180+11		
	PAVED DRIVE	180+62		
99		182+57		
405/100		185+06		
		186+09	PAVED DRIVE	
101		187+38		
		187+85	GRAVEL DRIVE	
	GRAVEL DRIVE	188+87		
	PAVED DRIVE	189+26		
102		189+50		102S
	GRAVEL DRIVE	189+85		
	PAVED DRIVE	190+29		
103		192+12		103S
		193+66	PAVED DRIVE	
104		194+25		
		194+61	PAVED DRIVE	
POLE		195+40		
405/105		196+60		
LIGHT		197+80		
		199+01	GRAVEL DRIVE	
106		199+24		
		200+57	GRAVEL DRIVE	
		201+43	GRAVEL DRIVE	
107		201+72		
108		204+59		
		205+09	GRAVEL DRIVE	
109		207+26		109S
	PAVED DRIVE	208+47		
	PAVED DRIVE	209+01		
405/110		209+78		110
111		212+27		
112		214+88		
		215+56	FIELD ENT	
		216+70		POLE
		216+94	GRAVEL DRIVE	
P925/113		217+57		

		217+72	PAVED DRIVE	
		217+94		POLE
		219+93	GRAVEL DRIVE	
	114	220+18		
405/115		222+61		
		224+03	GRAVEL DRIVE	
		224+65	GRAVEL DRIVE	
	116	225+03		116X
		225+35	GRAVEL DRIVE	
	FIELD ENTRANCE	225+86	GRAVEL DRIVE	
	117	227+34	GRAVEL DRIVE	
		230+20	X-PIPE	
	118	232+07		
		232+12		GUY
	GRAVEL DRIVE	232+28		
		232+68	FIELD ENT	
	GRAVEL DRIVE	233+82		
405/120		234+66		120S
		235+50	FIELD ENT	
	121	237+28		
		237+78	PAVED DRIVE	
		239+26	PAVED DRIVE	
	122	239+83		
	GRAVEL DRIVE	241+30		
	123	242+60		
	GRAVEL DRIVE	244+63		
		245+23	PAVED DRIVE	
	124	245+46		
		246+52	GRAVEL DRIVE	
405/125		248+50		
		248+58		125S
	MCDONALD ROAD	249+00		
	PAVED DRIVE	249+78		
	PAVED DRIVE	250+96		
		251+18	GRAVEL DRIVE	
	126	251+42		
	GRAVEL DRIVE	251+87		
		252+07	GRAVEL DRIVE	
	127	253+78		
		255+27	PAVED DRIVE	
	GRAVEL DRIVE	255+81		
	128	256+23		
		256+47		128X
		257+47	GRAVEL DRIVE	
		258+38		129X
	129	258+63		
		258+81	PAVED DRIVE	
	STONE DR	259+09		
		260+20	C.B. OFF PAVEMMENT	
	PAVED DRIVE	261+24		
	GRAVEL DRIVE	261+46		
	130	261+72		
	PAVED DRIVE	262+66	GRAVEL DRIVE	
	PAVED DRIVE	264+49		
		264+55	CARSON RD	
	131	264+66		
	PAVED DRIVE	265+75		
	132	267+60		
	133	270+36		
	134	273+27		
		274+00	GRAVEL DRIVE	80'
		274+83	GRAVEL DRIVE	
		275+29	GRAVEL DRIVE	
	GRAVEL DRIVE	275+48		
405/135		276+05		
		276+70		135X
	GRAVEL DRIVE	277+04		
		277+37	PAVED DRIVE	
	FIELD ENTRANCE	278+41		
	136	278+70		136S
	GRAVEL DRIVE	279+59		
	137	281+38		
		283+15	PAVED DRIVE	
	138	284+10		
		284+40	X-PIPE	
		284+84	GRAVEL DRIVE	
		285+00	PAVED DRIVE	
	GRAVEL DRIVE	285+95		
		286+22	PAVED DRIVE	
	GRAVEL DRIVE	286+44		
405/139		286+63		
		288+46	GRAVEL DRIVE	
	GRAVEL DRIVE	288+77		
		288+92	GRAVEL DRIVE	

405/140		289+34			
	PAVED DRIVE	289+64			
	PAVED DRIVE	291+29			
	141	292+15			
	GRAVEL DRIVE	293+58			
	GRAVEL DRIVE	294+49			
	142	294+84			
		295+28	PROJ MARKER		
	PAVED DRIVE	295+35			
		295+90	PAVED DRIVE		
		296+59	PAVED DRIVE		
	C.B.	296+89			
	PAVED DRIVE	297+04			
POLE		297+28			
		297+57	PAVED DRIVE		
	GRAVEL DRIVE	297+68		POLE	
	GRAVEL DRIVE	298+25			
		298+76	PAVED DRIVE		
	GRAVEL DRIVE	299+40		POLE	
	144	299+98			
		302+85			910
405/145		303+24			
		303+32	BARTLET RD		
	146	305+76			
		308+01	GRAVEL DRIVE		
	147	308+77			
	PAVED DRIVE	309+60			
	PAVED DRIVE	310+20			
	148	310+98			
	GRAVEL DRIVE	312+47			
	149	313+23			
		314+75	GRAVEL DRIVE		
405/150		315+43			
	GRAVEL DRIVE	316+27			
	GRAVEL DRIVE	317+30			
	151	317+56		151S	
	GRAVEL DRIVE	318+30			
	GRAVEL DRIVE	319+40			
	152	320+12		152S	
	GRAVEL DRIVE	320+34			
	GRAVEL DRIVE	321+04			
	153	322+96			
	PAVED DRIVE	325+77	GRAVEL DRIVE		
	154	326+00			
	GRAVEL DRIVE	327+38			
	155	328+76			
		328+93	GRAVEL DRIVE		
	PAVED DRIVE	330+32		TKLANE	
		330+52	GRAVEL DRIVE		
	156	331+56		156S	
	WILEY RD	333+70	LITTLE RD		
	157	334+15			
		334+30	PAVED DRIVE		
	PAVED DRIVE	335+10			
		335+40		157X	
		335+75	PAVED DRIVE		
	GRAVEL DRIVE	335+85			
	158	336+44	GRAVEL DRIVE		
		336+72	PAVED DRIVE		
		337+15		158D	
	GRAVEL DRIVE	337+35			
	159	339+04			
		339+40	GRAVEL DRIVE		
	GRAVEL DRIVE	340+83			
	160	341+52		160S	
	GRAVEL DRIVE	341+73			
		342+50	GRAVEL DRIVE		
	161	344+00	GRAVEL DRIVE		
	GRAVEL DRIVE	345+61			
	162	346+50			
		347+65		163X	
		347+98	GRAVEL DRIVE		
	FIELD ENTRANCE	348+40			
	163	348+61			
	GRAVEL DRIVE	348+94			
		349+36	FIELD ENT		
		349+90	PAVED DRIVE		
	GRAVEL DRIVE	350+65			
	164	351+20			
		352+58	PAVED DRIVE		
	165	353+65			
		354+00	END		

Pavement Marking Info

Description	Station
PASS BOTH WAYS	140+10
PASS LEFT	141+78
DO NOT PASS	143+80
GAP	145+04
DO NOT PASS	145+75
PASS RIGHT	149+42
PASS BOTH WAYS	156+29
PASS LEFT	231+75
PASS BOTH WAYS	236+02
PASS RIGHT	239+95
DO NOT PASS	246+51
GAP	248+70
DO NOT PASS	249+30
GAP	264+35
DO NOT PASS	264+85

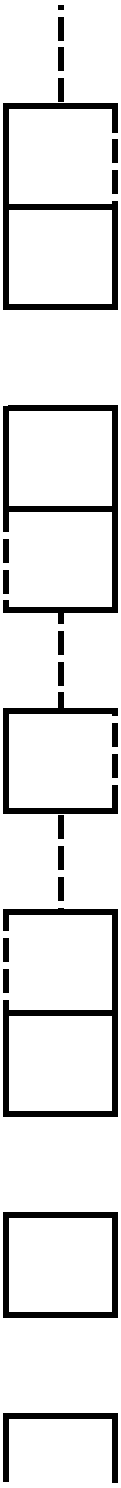

PASS BOTH WAYS	276+00
PASS LEFT	280+90
PASS BOTH WAYS	284+40
PASS RIGHT	290+40
PASS BOTH WAYS	294+78
PASS LEFT	297+28
GAP	303+42
DO NOT PASS	304+95
PASS LEFT	306+80
PASS BOTH WAYS	310+50
PASS RIGHT	312+90
PASS BOTH WAYS	319+00
DO NOT PASS	329+30
GAP	333+42
DO NOT PASS	333+85

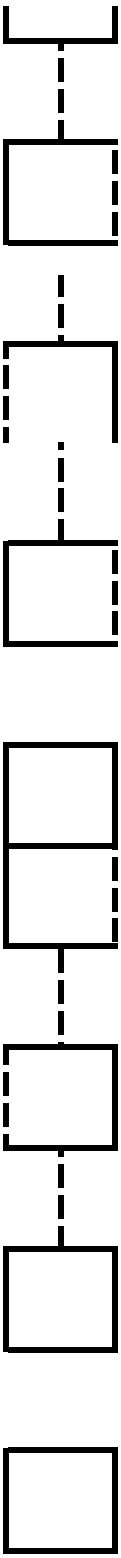

NH-A139(000)E
Houlton,
Rte. 1, PPM

Construction Notes

202.203 PAVEMENT BUTT JOINTS

Mainline, Side Roads, Along paved drives and end of sidewalks, as required and as directed by Resident.
Approximately 142 Paved Drives

409.15 BITUMINOUS TACK COAT APPLIED

The existing pavement shall receive tack at the rate of .02 gal.per Sq. Yard. The remainig lifts shall receive a light mist.

411.10 UNTREATED AGGR SURFACE CRS, TRUCK MEASURE

Use in driveways, field and lawn entrances, as directed by Resident.
81 driveways and entrances

411.12 CRUSHED STONE SURFACE

Use on crushed stone drives as directed by Resident
2 crushed stone driveway

424.37 CRACK REPAIR

Various areas from sta 155+00 to 202+00

606.7900 GUARDRAIL 350 FLARED TERMINAL

Sta	228 +75	RT
Sta	232+25	RT
Sta	297+62	RT
Sta	300+62	LT
Sta	305+57	RT
Sta	308+50	LT

Town Houlton-Littleton
Project # 11390.00
Level #PPM, Rte # 1

GENERAL NOTES

1. All joints between existing and proposed hot bituminous pavement shall be butted. Payment shall be made under Item 202.203 Pavement Butt Joint.

2. Construct Butt Joints at all paved drives and entrances as directed by the Resident.

3. Where deemed necessary by the Resident, winter sand shall be removed from the edges of shoulders and placed in designated areas or disposed of. Payment will be made under the appropriate hourly rental items.

4. The Contractor shall place suitable existing material, or other material acceptable to the Resident, on all pavement edges to allow no greater than a 40 mm [1 ½ in] drop-off and be graded to 3:1 or flatter. Payment to be incidental to the contract.

5. All waste material not used on the project shall be disposed of off the project in waste areas approved by the Resident

6. Any damage to the slopes caused by the Contractor's equipment, personnel, or operation shall be repaired to the satisfaction of the Resident. All work, equipment and materials required to make repairs shall be at the Contractor's expense.

7. A 3 ft paved lip shall be placed at all gravel entrances, except woods and field entrances, unless otherwise directed by the Resident.

8. Item # 411.10, Untreated Aggregate Surface Course, may also meet the gradation requirements of item # 204.20, Add Shoulder Aggregate.

9. Any necessary cleaning of existing pavement prior to paving shall be incidental to the related paving items.

10. All existing paved shoulders and widenings to be resurfaced as directed by the Resident.

11. Shoulder shim shall taper to 0 mm [0 in] at face of existing curb and guardrail.

12. "Undetermined Locations" shall be determined by the Resident.

13. Stations referenced are approximate.

14. Grind transition tapers at Catch Basins under Item No. 202.203, Pavement Butt Joints, as directed by the Resident.

15. All work shall be done in accordance with the Maine Department of Transportation's Best Management Practices for Erosion Control & Sediment Control, January, 2000.

16. MDOT will final stripe the project. The Contractor is responsible for transferring the existing striping pattern to the surface course.

STATE OF MAINE
DEPARTMENT OF TRANSPORTATION

MARS HILL - WESTFIELD
AROOSTOOK COUNTY
ROUTE 1
NH-1139(200)E
PROJECT LENGTH : 1.21 MILES
PPM

NH-1139(200)E

BEGIN PROJECT STA. 133+05

END PROJECT STA. 196+50

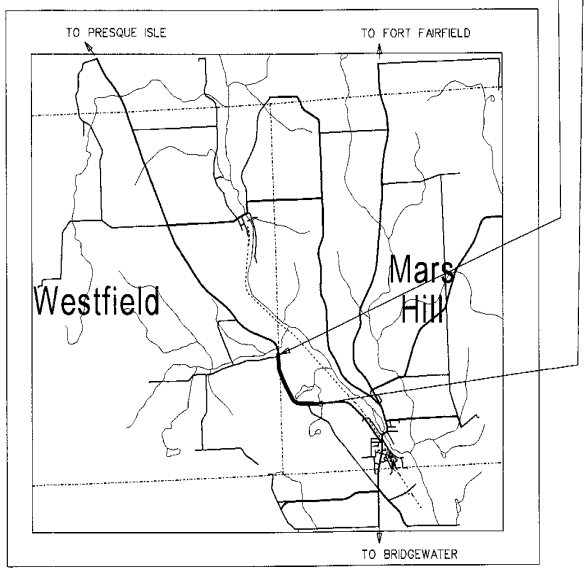

LOCATION MAP

2 0 2 4

Scale in Miles

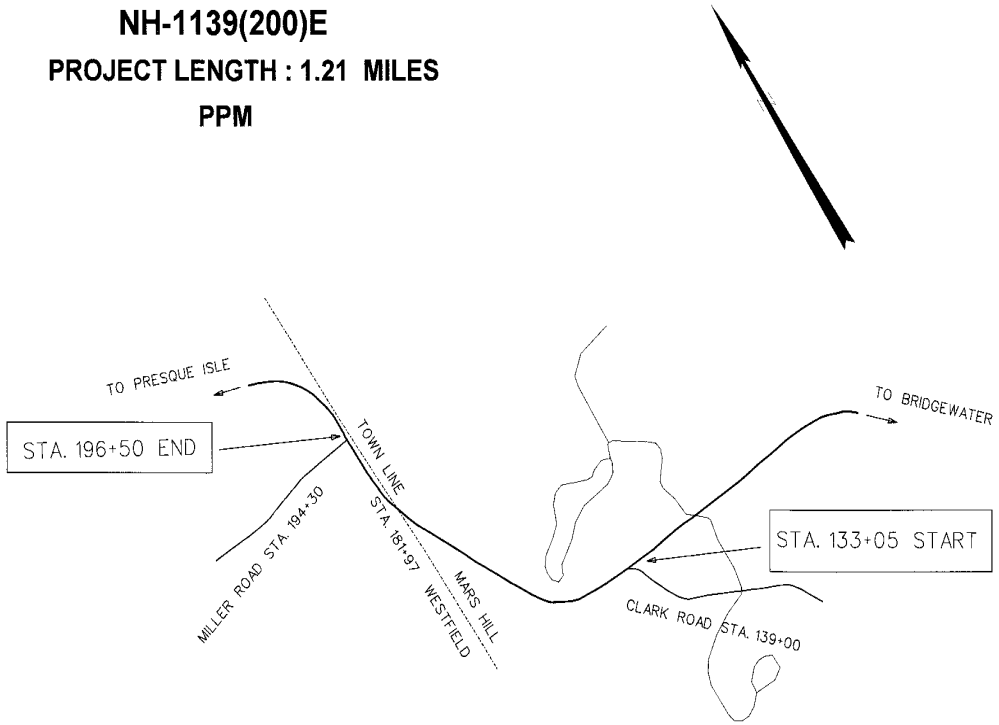

HOT MIX ASPHALT OVERLAY

TRAFFIC DATA **Sec. 1**

Current (2004) AADT	5470
Future (2016) AADT	6450
DHV - % of AADT	10
Design Hour Volume	711
% Heavy Trucks (AADT)	13
% Heavy Trucks (DHV)	10
Directional Distribution (DHV)	52
18 kip Equivalent P 2.0	748
18 kip Equivalent P 2.5	713
Design Speed (mph)	50

STATE OF MAINE
DEPARTMENT OF TRANSPORTATION
APPROVED
COMMISSIONER: DATE 2/17/04
CHIEF ENGINEER: DATE 2/17/04

PROJECT INFORMATION
PROGRAM
PROJECT MANAGER
DESIGNER
PROJECT RESIDENT
CONTRACTOR
PROJECT COMPLETION DATE
REGIONAL
DEPUTY SPONSERS
SIGNATURE
PARTICIPANT
DATE
2/13/04

PIN 11392.00

NH-1139(200)E

MARS HILL-WESTFIELD
ROUTE 1
TITLE SHEET

SHEET NUMBER
1
OF 1

3/4″ HOT MIX ASPHALT SHIM AND OVERLAY NORMAL SECTION

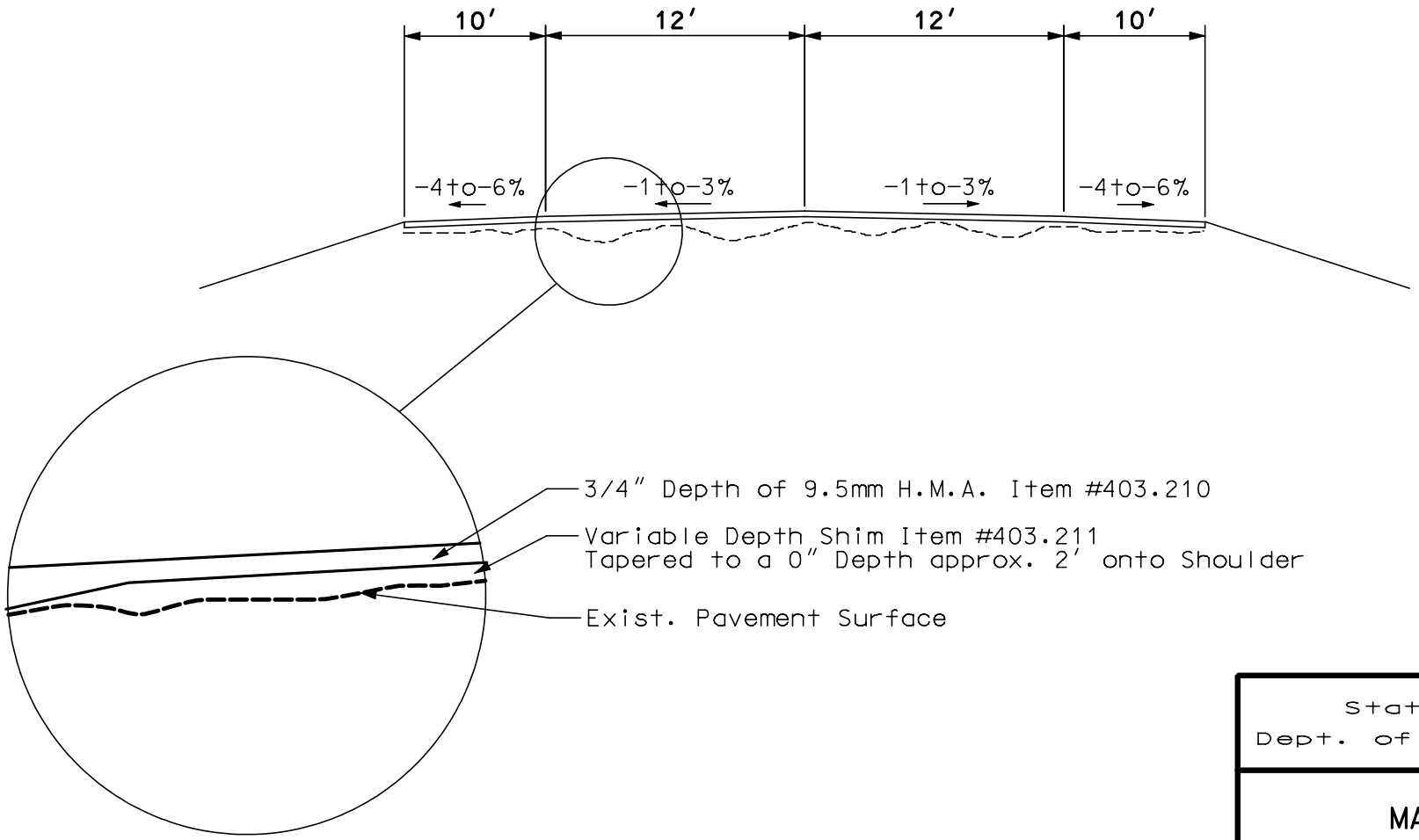

IMPERIAL
NOT TO SCALE

State of Maine
Dept. of Transportation

MARS HILL
U.S. Rte. 1
Proj # NH-1139(200)E

SHEET 1 of 3

1/12/04

3/4″ HOT MIX ASPHALT SHIM AND OVERLAY SUPERELEVATION

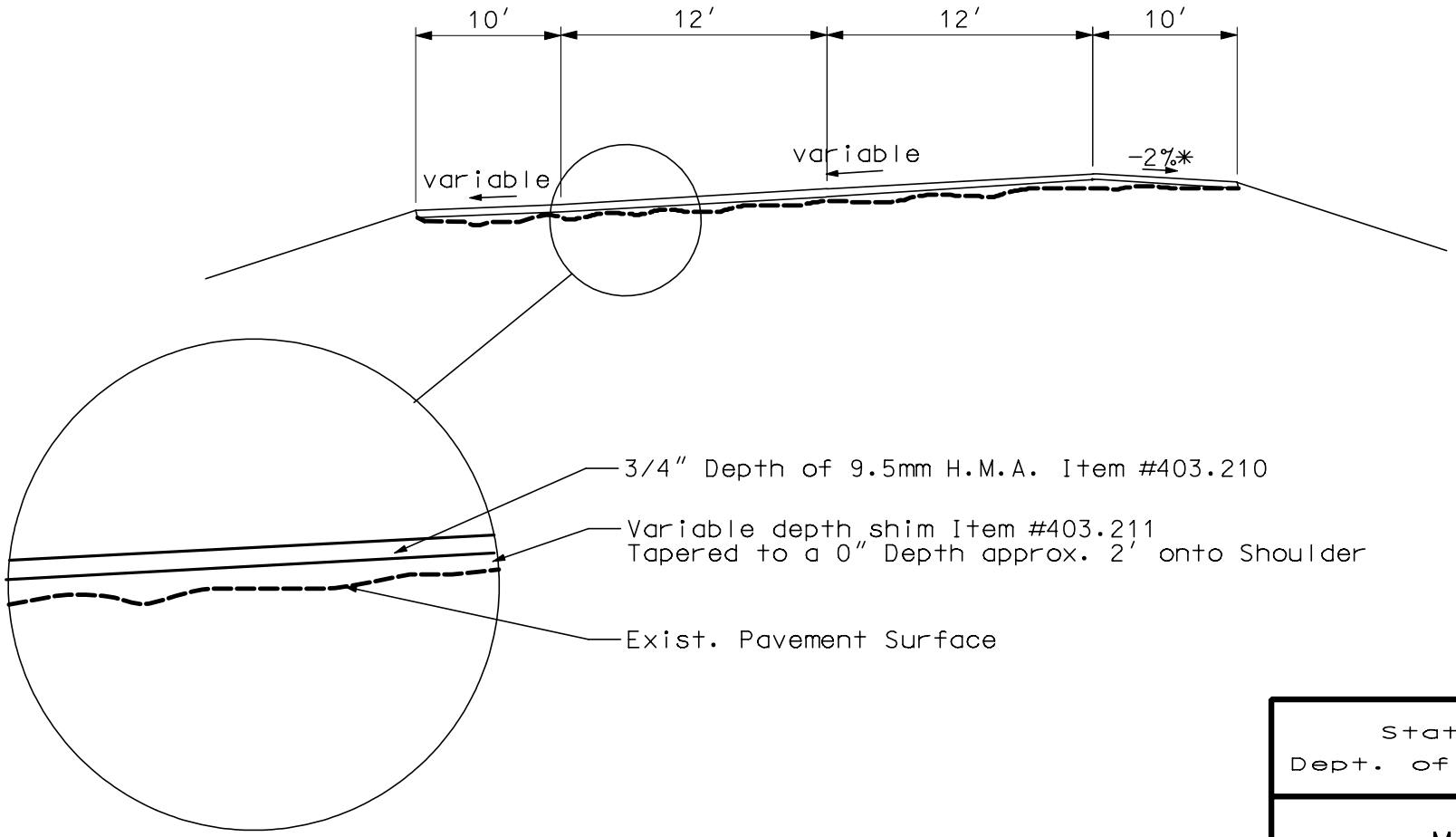

IMPERIAL
NOT TO SCALE

State of Maine
Dept. of Transportation

MARS HILL
U.S. Rte. 1
Proj # NH-1139(200)E

Notes:

*Shoulders shall have a cross slope of 2% on the high side of the superelevation when the algebraic difference in the rate of cross slope exceeds 8%

When the travelway super exceeds 4%, low side shoulder slope will have same slope as travelway.

1/12/04

3/4″ Hot Mix Asphalt Shim and Overlay Guardrail Sections

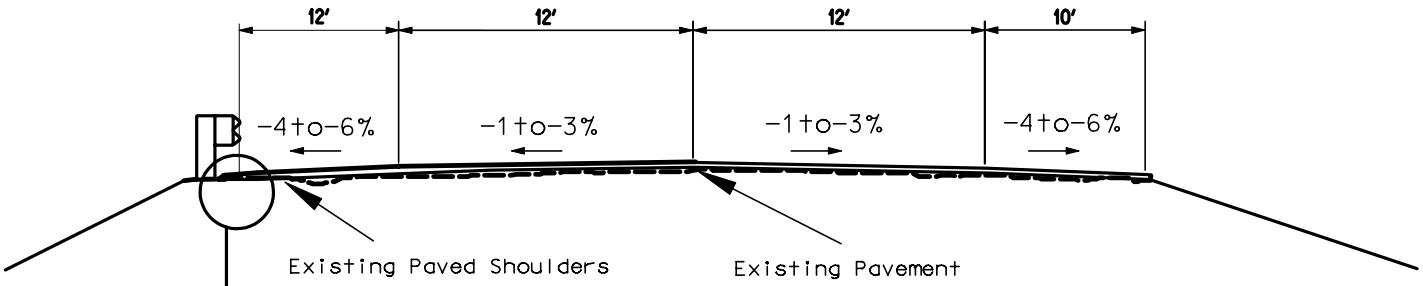

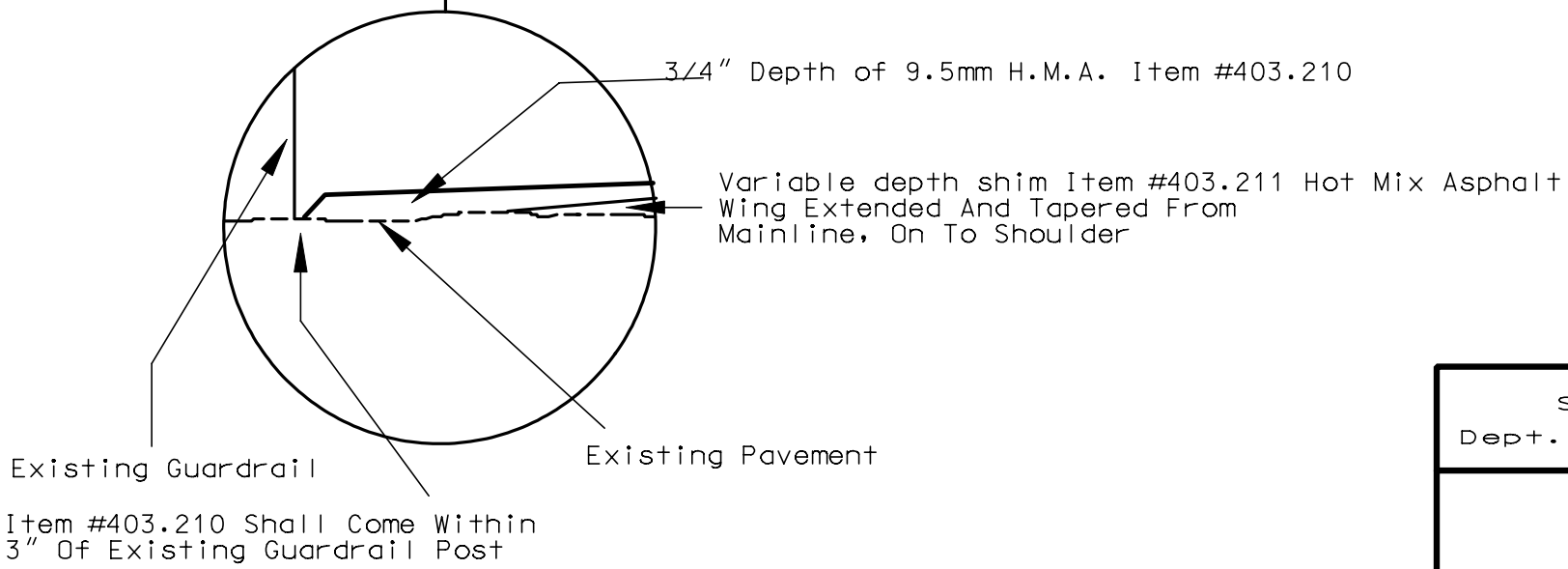

IMPERIAL
NOT TO SCALE

State of Maine
Dept. of Transportation

MARS HILL
U.S. Rte. 1
Proj # NH-1139(200)E

SHEET 3 of 3

1/12/04

NH-1139(200)E
Mars Hill - Westfield
U.S. Rte 1
PPM

Pole #	Topo - Left	Station Feet	Topo - Right	Pole #
	Begin Project	133+05	Begin Project	
2	Pole	133+76		
1 1/2	Pole	136+49	Guy Pole	1 1/2S
	Hydrant	138+05		
405B/1	Pole	138+31	Right Curve Sign	
	Stop Sign, Clark Rd. Sign	138+75		
	Clark Rd.	139+00		
405B/ 1/2	Pole	139+77		
		141+60	School Bus Stop Ahd. Sign	
405/765	Pole	141+63		
765 1/2	Pole	143+47		
	15' Gravel Drive Skewed Ahd. Lt.	143+56		
766	Pole	145+00		
		145+24	Begin Guard Rail	
	12' Gravel Drive	145+72		
	Sign, Side Road on Rt.	146+08		
	X-Pipe Skewd ahd. Lt.	146+60	X-Pipe Skewd ahd. Lt.	
		147+48	End Guard Rail	
767	Pole	147+98		
	15' Gravel Drive	150+69		
768	Pole	150+98		
	14' Gravel Drive	152+04		
	12' Lawn ent.	153+02		
769	Pole	153+17		
	Hydrant	153+45		
	22' Gravel Drive	154+00		
	X-Pipe	154+50	X-Pipe	
405/770	Pole	155+22		
	14' Gravel Drive	155+67		
771	Pole	157+46		
	School Bus Stop Ahead Sign	158+43		
	X-Pipe	159+10	X-Pipe	
	12' Gravel Drive	159+47		
	Mailbox	159+62		
		159+65	Guide Pole	
772	Pole	159+70		
		160+00	12' Field ent.	
	Cedar Fence Line	160+40		
	Left Curve Sign	162+20		
773	Pole	162+28		
	12' Gravel Drive	164+24		
405/773	Pole	164+82		
		165+50	12' Field ent.	
	Welcome to Mars Hill Sign	165+79		
774	Pole	166+86	Underdrain Delineator	
	14' Gravel Drive	167+40		
	Begin Curb Section	167+57		
405/ 775	Pole	168+71		
	End Curb Section	169+20		
		169+65	10' Gravel Drive	
		170+03	Pole	776X
		170+55	10' Gravel Drive	
		170+96	12' Gravel Dr.	
776	Pole	171+27		
	14' Paved Drive	171+81		
		172+74	14' Gravel Drive	
	15" X Pipe	174+00		
777	Pole	174+24		
		174+58	Mailbox	
		174+70	12' Gravel Dr.	
	Paved Drive 24'	174+82		
		176+05	D Pole	
	16' Gravel Drive	176+20		
	Mail Box	176+35	Right Curve Sign	
	X Pipe skewd Ahead	176+50		
778	Pole	176+82		
778D	Pole	177+22		
		177+50	16' Paved Drive	
		178+01	16' Paved Drive	
		178+77	Cedar Fence Line	
778 1/2	Pole	178+79		
	Hydrant	178+88		
		179+55	20' Paved Drive	
		179+75	Mailbox	
		179+98	Pole	779D
	Mailbox	180+11		

NH-1139(200)E
Mars Hill - Westfield
U.S. Rte 1
PPM

Pole #	Topo - Left	Station Feet	Topo - Right	Pole #
	24' Paved Drive	180+25		
		180+82	Ant Worth Lane (possibly paved)	
		180+93	Antworth Lane sign	
P1/ S26/ 40T	Pole/ 779	181+15		
	X-Pipe	181+50	X-Pipe	
		181+76	14' Paved Drive	
	Westfield/ Mars Hill Town Line Marker	181+97		
		182+01	Pole	780D
		182+75	10' Paved Drive	
405/ 780	Pole	182+95		
		183+15	20' Paved Drive	
781	Pole	184+74		
		185+20	20' Paved Drive	
	X-Pipe	185+75	X Pipe	
	Moose Crossing Sign	186+52	Recreational Trail ski-doo trail	
781 1/2	Pole	186+62		
	Recreational trail ski-doo trail	186+65		
		187+03	Intersection sign	
		187+05	Begin Chain link fence	
	20' Gravel Drive	187+10		
		?	End Chain Link Fence	
782	Pole	188+55		
782D		188+57	Pole	
		188+69	Mailbox	
	16' Paved Drive	188+72		
		188+88	24' Paved Drive	
		189+05	Mailbox	
	Left Curve Sign	189+08		
		190+31	Southern Acres Residential Care sign	
		190+52	Pole	P321/D17
782 1/2	Pole	190+68		
	50 MPH sign	190+72		
783	Pole	192+84		
	Rte 1 South sign	192+94		
		193+09	14' Gravel Drive	
		193+70	14' Gravel Drive	
	Stop sign and Miller Rd. sign	194+01		
	Center of Miller Rd.	194+30		
	Begin Bitum. Curb	194+44		
783 1/2	Pole	194+62	Pole	783 1/2
		194+72	15' Field ent.	
	End Bitum. Curb	195+41		
	16' Paved Drive	195+49	Left Curve Sign	
	Mailbox	195+63		
	End Project	196+50	End Project	

NH-1139(200)E
Mars Hill - Westfield
Rte. 1 PPM

Striping Diagram

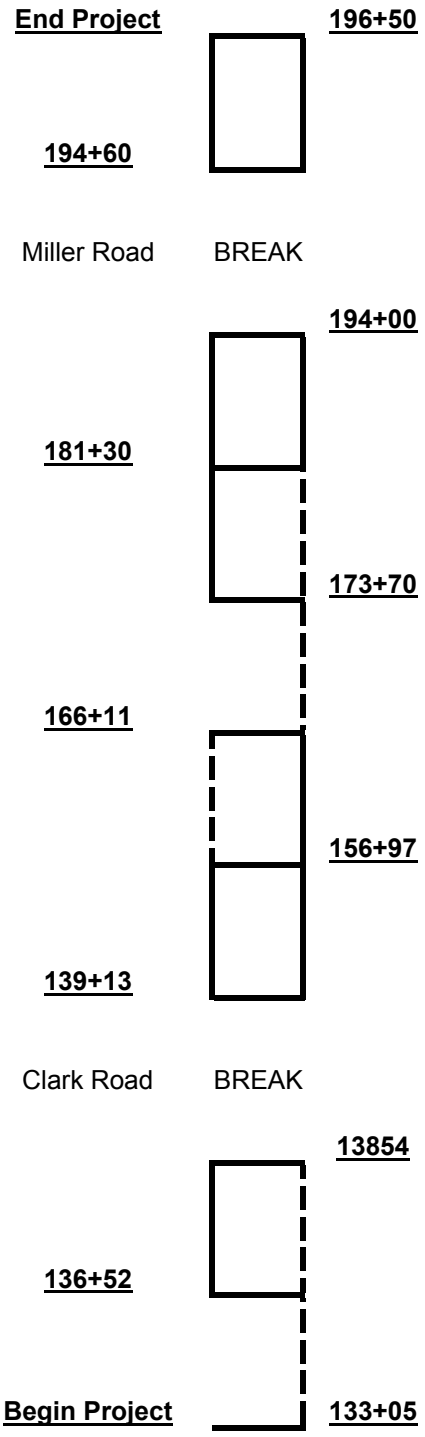

NH-1139(200)E
Mars Hill - Westfield
Rte. 1
PPM

Construction Notes

202.203 PAVEMENT BUTT JOINTS

Mainline, side roads, and along paved drives,
as required and as directed by the Resident
Approximately 12 Paved Drives

304.103 AGGR SUBB CRS-GRAVEL-TRUCK MS

Used in gravel drives and field entrances,
as directed by the Resident
Approximately 21 Gravel Drives

403.209 HOT MIX ASPHALT 9.5 MM (INCIDENTALS)

As directed by the Resident, a 3' apron will be paved on
all gravel entrances, all paved drives listed as having a
butt-joint will require HMA, to transition into the new pavement
Approximately 12 Paved Drives, and 15 Paved Aprons

403.210 HOT MIX ASPHALT 9.5 MM

3/4" Depth on mainline and shoulders, widths referred to on the
typicals, and as directed by the Resident

403.211 HOT MIX ASPHALT 9.5 MM (SHIM)

Variable depth on mainline zeroed onto shoulders,
as referred to on the Typicals and as directed by the Resident

409.15 BITUMINOUS TACK COAT APPLIED

A coat of tack will be applied before each lift of HMA
as directed by the Resident

Construction Notes

411.10 UNTREATED AGGR SURF CRS, TR MEASURE

Used in gravel drives, that require 304.103,
as directed by the Resident

606.79 GUARDRAIL 350 FLARED TERMINAL

To be installed at the end of each run of guardrail,
2 ends will be needed and installed as directed
by the Resident

GENERAL NOTES

1. All joints between existing and proposed hot bituminous pavement shall be butted. Payment shall be made under Item 202.203 Pavement Butt Joint.

2. Construct Butt Joints at all paved drives and entrances.

3. The Contractor shall place suitable existing material, or other material acceptable to the Resident, on all pavement edges to allow no greater than a 1 ½ in (40mm) drop-off and be graded to 3:1 or flatter. Payment to be incidental to the contract.

4. All waste material not used on the project shall be disposed of off the project in waste areas approved by the Resident

5. Any damage to the slopes caused by the Contractor's equipment, personnel, or operation shall be repaired to the satisfaction of the Resident. All work, equipment and materials required to make repairs shall be at the Contractor's expense.

6. A one meter [3 ft] paved lip shall be placed at all gravel entrances, except woods and field entrances, unless otherwise directed by the Resident.

7. Item # 411.10, Untreated Aggregate Surface Course, may also meet the gradation requirements of item # 204.20, Add Shoulder Aggregate.

8. Any necessary cleaning of existing pavement prior to paving shall be incidental to the related paving items.

9. All existing paved shoulders and widenings to be resurfaced as directed by the Resident.

10. Item # 403.211, shim shall taper to 0 inch [0 mm], 2' width onto the shoulder.

11. 350 Terminal End Treatments will be installed at all guardrail ends on this project.

12. Existing Modified Eccentric Load Terminals will be removed and become the property of the Contractor.

13. Holes created by Guardrail removal and installation will be filled and compacted with approved materials directed by the Resident.

14. "Undetermined Locations" shall be determined by the Resident.

15. Stations referenced are approximate.

16. Grind transition tapers at Catch Basins under Item No. 202.203, Pavement Butt Joints, as directed by the Resident.

17. MDOT will final stripe the project.

State of Maine
Department of Labor
Bureau of Labor Standards
Technical Services Division
Augusta, Maine 04333-0045
Telephone (207) 624-6445

Wage Determination - In accordance with 26 MRSA §1301 et. seq., this is a determination by the Bureau of Labor Standards, of the fair minimum wage rate to be paid laborers and workers employed on the below titled project.

Title of Project -------- PIN 11116.00 – Intersection Improvement

Location of Project -- Houlton, Maine in Aroostook County

2004 Fair Minimum Wage Rates
Highway & Earthwork Aroostook County

Occupation Title	Median Wage	Median Benefit	Total	Occupation Title	Median Wage	Median Benefit	Total
Asphalt Raker	$12.00	$3.22	$15.22	Laborer - Skilled	$10.15	$0.25	$10.40
Backhoe Loader Operator	$12.50	$1.27	$13.77	Loader Op, Front-End	$14.28	$3.01	$17.29
Bulldozer Operator	$15.11	$2.71	$17.82	Mechanic - Maintenance	$14.55	$3.23	$17.78
Cement Mason/Finisher	$15.96	$2.37	$18.33	Paver, Bituminous	$16.11	$6.40	$22.51
Crusher Plant Operator	$12.40	$6.40	$18.80	Pipelayer	$11.63	$1.01	$12.64
Driller, Rock	$13.00	$2.26	$15.26	Roller Operator, Earth	$12.30	$4.37	$16.67
Electrician	$19.00	$3.65	$22.65	Roller Operator, Pavement	$16.11	$6.40	$22.51
Excavator Operator	$14.00	$0.60	$14.60	Screed Operator	$15.10	$6.78	$21.88
Flagger	$9.84	$0.44	$10.28	Truck Driver, Light	$10.00	$2.60	$12.60
Grader/Scraper Operator	$16.00	$0.27	$16.27	Truck Driver, Medium	$10.00	$0.00	$10.00
Hgway Wrkr/Guardrail Inst	$12.00	$1.75	$13.75	Truck Driver, Heavy	$10.75	$0.42	$11.17
Hot Top Plant Operator	$15.25	$5.82	$21.07	Truck Driver, Tractor Trlr	$12.00	$3.16	$15.16
Laborers/Helper/Tender	$9.92	$0.27	$10.19	Truck Driver, Mixer, Cemnt	$10.40	$4.60	$15.00

The Laborer classifications include a wide range of work duties. Therefore, if any specific occupation to be employed on this project is not listed in this determination, call the Bureau of Labor Standards at the above number for further clarification.

Welders are classified in the trade to which the welding is incidental.

Apprentices - The minimum wage rate for registered apprentices are those set forth in the standards and policies of the Maine State Apprenticeship and Training Council for approved apprenticeship programs.

Posting of Schedule - Posting of this schedule is required in accordance with 26 MRSA §1301 et. seq., by any contractor holding a State contract for construction valued at $50,000 or more and any subcontractors to such a contractor.

Appeal - Any person affected by the determination of these rates may appeal to the Commissioner of Labor by filing a written notice with the Commissioner stating the specific grounds of the objection within ten (10) days from the filing of these rates with the Secretary of State.

Determination No: HI-007-2004

Filing Date: January 23, 2004

Expiration Date: 12-31-2004

A true copy

Attest: _____
William A. Peabody
Director
Bureau of Labor Standards

BLS 424HI (R2004) (Highway & Earthwork Aroostook)

General Decision Number ME030009 06/13/2003 ME9

Superseded General Decision No. ME020009

State: Maine

Construction Type:
HIGHWAY

County(ies):

AROOSTOOK	KNOX	SAGADAHOC
FRANKLIN	LINCOLN	SOMERSET
HANCOCK	OXFORD	WALDO
KENNEBEC	PISCATAQUIS	YORK

HIGHWAY CONSTRUCTION PROJECTS excluding major bridging (for example: bascule, suspension and spandrel arch bridges; those bridging waters presently navigating or to be navigatable; and those involving marine construction in any degree); tunnels, building structures in rest area projects and railroad construction.

Modification Number	Publication Date
0	06/13/2003

COUNTY(ies):

AROOSTOOK	KNOX	SAGADAHOC
FRANKLIN	LINCOLN	SOMERSET
HANCOCK	OXFORD	WALDO
KENNEBEC	PISCATAQUIS	YORK

ENGI0004V 04/01/2003

	Rates	Fringes
POWER EQUIPMENT OPERATORS:		
Pavers	16.51	6.00
Rollers	16.51	6.00

SUME4024A 10/24/2000

	Rates	Fringes
CARPENTERS	11.60	1.51
IRONWORKERS		
Structural	12.03	1.58
LABORERS		
Drillers	10.00	2.50
Flaggers	6.00	
Guardrail Installers	7.92	
Landscape	7.87	.16
Line Stripper	8.69	.23
Pipelayers	9.21	2.31
Rakers	9.00	1.51
Sign Erectors	10.00	
Unskilled	8.66	1.38
Wheelman	8.50	.43
POWER EQUIPMENT OPERATORS		
Backhoes	11.87	2.05
Bulldozers	12.33	2.88
Cranes	14.06	1.75
Excavators	12.38	2.48
Graders	13.06	3.73

Loaders	11.41	2.87
Mechanics	13.18	2.57
TRUCK DRIVERS		
Dump	9.35	3.10
Tri axle	8.70	1.18
Two axle	8.56	2.19

WELDERS - Receive rate prescribed for craft performing operation to which welding is incidental.

==========

Unlisted classifications needed for work not included within the scope of the classifications listed may be added after award only as provided in the labor standards contract clauses (29 CFR 5.5(a)(1)(ii)).

In the listing above, the "SU" designation means that rates listed under that identifier do not reflect collectively bargained wage and fringe benefit rates. Other designations indicate unions whose rates have been determined to be prevailing.

WAGE DETERMINATION APPEALS PROCESS

1.) Has there been an initial decision in the matter? This can be:

* an existing published wage determination
* a survey underlying a wage determination
* a Wage and Hour Division letter setting forth a position on a wage determination matter
* a conformance (additional classification and rate) ruling

On survey related matters, initial contact, including requests for summaries of surveys, should be with the Wage and Hour Regional Office for the area in which the survey was conducted because those Regional Offices have responsibility for the Davis-Bacon survey program. If the response from this initial contact is not satisfactory, then the process described in 2.) and 3.) should be followed.

With regard to any other matter not yet ripe for the formal process described here, initial contact should be with the Branch of Construction Wage Determinations. Write to:

Branch of Construction Wage Determinations
Wage and Hour Division
U. S. Department of Labor
200 Constitution Avenue, N. W.
Washington, D. C. 20210

2.) If the answer to the question in 1.) is yes, then an interested party (those affected by the action) can request review and reconsideration from the Wage and Hour Administrator (See 29 CFR Part 1.8 and 29 CFR Part 7). Write to:

Wage and Hour Administrator
U.S. Department of Labor
200 Constitution Avenue, N. W.
Washington, D. C. 20210

The request should be accompanied by a full statement of the

interested party's position and by any information (wage payment data, project description, area practice material, etc.) that the requestor considers relevant to the issue.

3.) If the decision of the Administrator is not favorable, an interested party may appeal directly to the Administrative Review Board (formerly the Wage Appeals Board). Write to:

Administrative Review Board
U. S. Department of Labor
200 Constitution Avenue, N. W.
Washington, D. C. 20210

4.) All decisions by the Administrative Review Board are final.

END OF GENERAL DECISION

Project Nos. : STP-1138(800)X,
NH-1138(700)E, NH-1138(900)E
& NH-A139(000)E

SPECIAL PROVISION
CONSTRUCTION AREA

A Construction Area located in the **Towns of Houlton and Littleton** has been established by the Maine Department of Transportation in accordance with provisions of Title 29, Section 1703, Maine Revised Statutes Annotated.

The section of highway under construction in Aroostook County, is located on Route 1; project STP-1138(800)X is section one beginning 0.13 of a mile southerly of Smyrna Street at the north abutment of the Old Iron Bridge and extending northerly 0.76 of a mile to Houlton Plaza Traffic Light. Project NH-1138(700)E is section two continuing northerly 0.88 of a mile. Project NH-1138(900)E is section three continuing 1.02 miles northerly and NH-A139(000)E is section four continuing 4.05 miles northerly to a point 0.39 of a mile northerly of the Wiley Rd/Little Rd intersection. Total length 6.71 miles.

The State Department of Transportation or the State's Engineer may issue permits for stated periods of time for moving construction equipment without loads, low-bed trailers with overloads, over-height, over-width or over-length equipment or materials over all State maintained sections described in the "Construction Area" above and in addition may issue permits for stated periods of time for moving overweight vehicles and loads over the section described in (a) above. The right to revoke such a permit at any time is reserved by the State Department of Transportation and the issuance of such permits shall be subject to any Special Provisions or Supplemental Specifications written for this project.

A Temporary Permit for each move may be issued by the State Department of Transportation or the State's Engineer for moving Contractor's construction equipment used on the project which exceeds the legal limits (shovels, bulldozers, etc.) to sources of construction material over highways maintained by the State reasonably within the area of the project.

The Municipal Officers for the **Towns of Houlton and Littleton** agreed that a permit will be issued to the Contractor for the purpose of hauling loads in excess of the limits as specified in Title 29, Maine Revised Statues Annotated, on the town ways as described in the "Construction Area" and that single move permits will be issued for moving Contractor's construction equipment used on the project which exceeds the legal limits (shovels, bulldozers, etc.) to sources of construction material over town ways reasonably within the area of the project.

In the event it is necessary to transport gravel, borrow, or other construction material in legally registered vehicles carrying legal loads over town ways, a Contractor's Bond of not more than Nine Thousand ($9,000.00) per kilometer of traveled length may be required by the town, the exact amount of said bond to be determined prior to use of any town way.

The maximum speed limits for trucks on any town way will be forty (40) km per hour [25 mph], unless a higher legal limit is specifically agreed upon in writing by the Municipal Officers concerned.

STP-1138(800)X SECTION 1
NH-1138(700)E SECTION 2
NH-1138(900)E SECTION 3
NH-A139(000)E SECTION 4

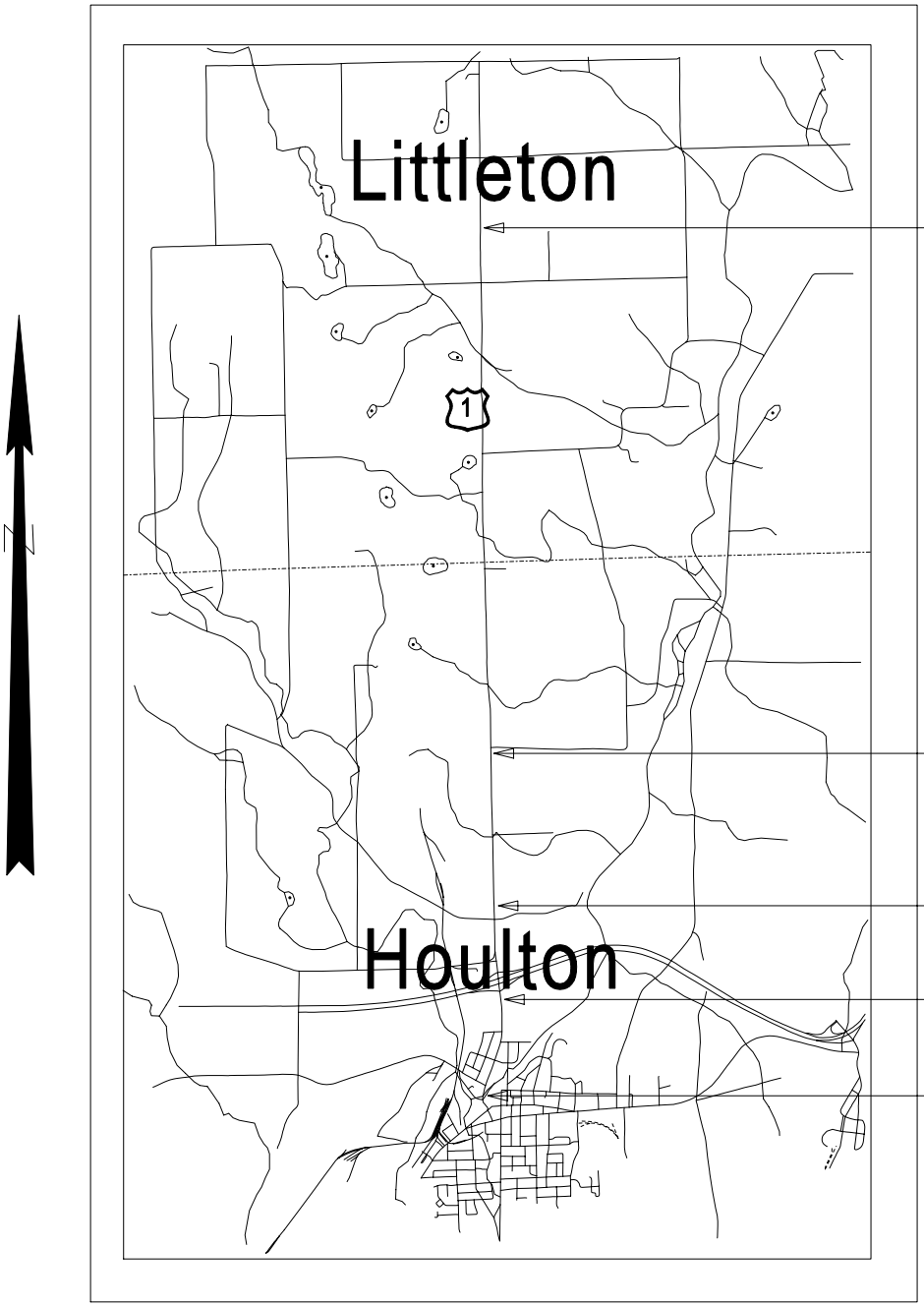

STA. 354+00 END OF SECTION 4

STA. 140+20 START OF SECTION 4
STA. 140+20 END OF SECTION 3

STA. 86+50 START OF SECTION 3
STA. 86+50 END OF SECTION 2

STA. 40+20 START OF SECTION 2
STA. 40+20 END OF SECTION 1

STA. 0+00 START OF SECTION 1

Scale in Miles

LOCATION MAP

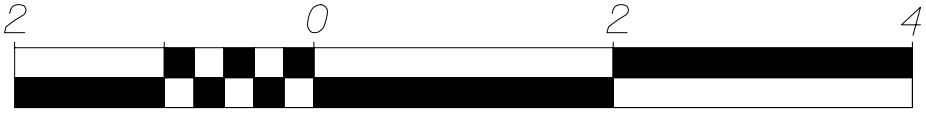

Project No. NH-1139(200)E

SPECIAL PROVISION
CONSTRUCTION AREA

A Construction Area located in the **Towns of Mars Hill and Westfield** has been established by the Maine Department of Transportation in accordance with provisions of Title 29, Section 1703, Maine Revised Statutes Annotated.

The section of highway under construction in Aroostook County, project NH-1139(200)E is located on US Route 1, beginning 0.16 of a mile southerly of Clark Street and extending northerly 1.21 miles.

The State Department of Transportation or the State's Engineer may issue permits for stated periods of time for moving construction equipment without loads, low-bed trailers with overloads, over-height, over-width or over-length equipment or materials over all State maintained sections described in the "Construction Area" above and in addition may issue permits for stated periods of time for moving overweight vehicles and loads over the section described in (a) above. The right to revoke such a permit at any time is reserved by the State Department of Transportation and the issuance of such permits shall be subject to any Special Provisions or Supplemental Specifications written for this project.

A Temporary Permit for each move may be issued by the State Department of Transportation or the State's Engineer for moving Contractor's construction equipment used on the project which exceeds the legal limits (shovels, bulldozers, etc.) to sources of construction material over highways maintained by the State reasonably within the area of the project.

The Municipal Officers for the **Towns of Mars Hill and Westfield** agreed that a permit will be issued to the Contractor for the purpose of hauling loads in excess of the limits as specified in Title 29, Maine Revised Statues Annotated, on the town ways as described in the "Construction Area" and that single move permits will be issued for moving Contractor's construction equipment used on the project which exceeds the legal limits (shovels, bulldozers, etc.) to sources of construction material over town ways reasonably within the area of the project.

In the event it is necessary to transport gravel, borrow, or other construction material in legally registered vehicles carrying legal loads over town ways, a Contractor's Bond of not more than Nine Thousand ($9,000.00) per kilometer of traveled length may be required by the town, the exact amount of said bond to be determined prior to use of any town way.

The maximum speed limits for trucks on any town way will be forty (40) km per hour [25 mph], unless a higher legal limit is specifically agreed upon in writing by the Municipal Officers concerned.

NH-1139(200)E

BEGIN PROGECT STA. 133+05

END PROJECT STA. 196+50

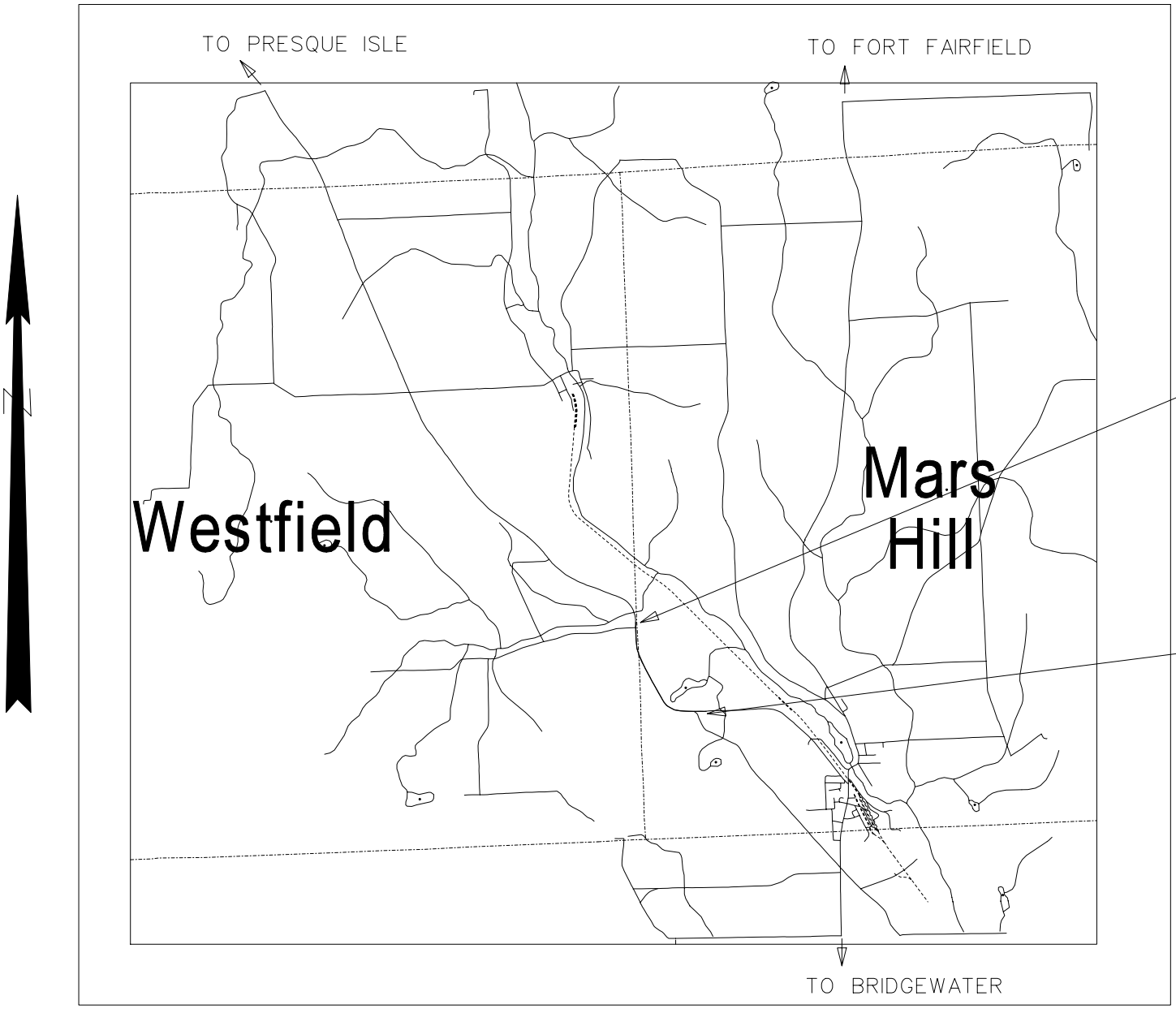

LOCATION MAP

Scale in Miles

PIN 11116.00

SPECIAL PROVISION
CONSTRUCTION AREA

A Construction Area located in the **Town of Houlton** has been established by the Maine Department of Transportation in accordance with provisions of Title 29, Section 1703, Maine Revised Statutes Annotated.

The section of highway under construction in Aroostook County, PIN 11116.00 is intersection and approach improvements, located at the intersection of Ludlow Road and Callaghan Road.

The State Department of Transportation or the State's Engineer may issue permits for stated periods of time for moving construction equipment without loads, low-bed trailers with overloads, over-height, over-width or over-length equipment or materials over all State maintained sections described in the "Construction Area" above and in addition may issue permits for stated periods of time for moving overweight vehicles and loads over the section described in (a) above. The right to revoke such a permit at any time is reserved by the State Department of Transportation and the issuance of such permits shall be subject to any Special Provisions or Supplemental Specifications written for this project.

A Temporary Permit for each move may be issued by the State Department of Transportation or the State's Engineer for moving Contractor's construction equipment used on the project which exceeds the legal limits (shovels, bulldozers, etc.) to sources of construction material over highways maintained by the State reasonably within the area of the project.

The Municipal Officers for the **Town of Houlton** agreed that a permit will be issued to the Contractor for the purpose of hauling loads in excess of the limits as specified in Title 29, Maine Revised Statues Annotated, on the town ways as described in the "Construction Area" and that single move permits will be issued for moving Contractor's construction equipment used on the project which exceeds the legal limits (shovels, bulldozers, etc.) to sources of construction material over town ways reasonably within the area of the project.

In the event it is necessary to transport gravel, borrow, or other construction material in legally registered vehicles carrying legal loads over town ways, a Contractor's Bond of not more than Nine Thousand ($9,000.00) per kilometer of traveled length may be required by the town, the exact amount of said bond to be determined prior to use of any town way.

The maximum speed limits for trucks on any town way will be forty (40) km per hour [25 mph], unless a higher legal limit is specifically agreed upon in writing by the Municipal Officers concerned.

PIN 11116.00

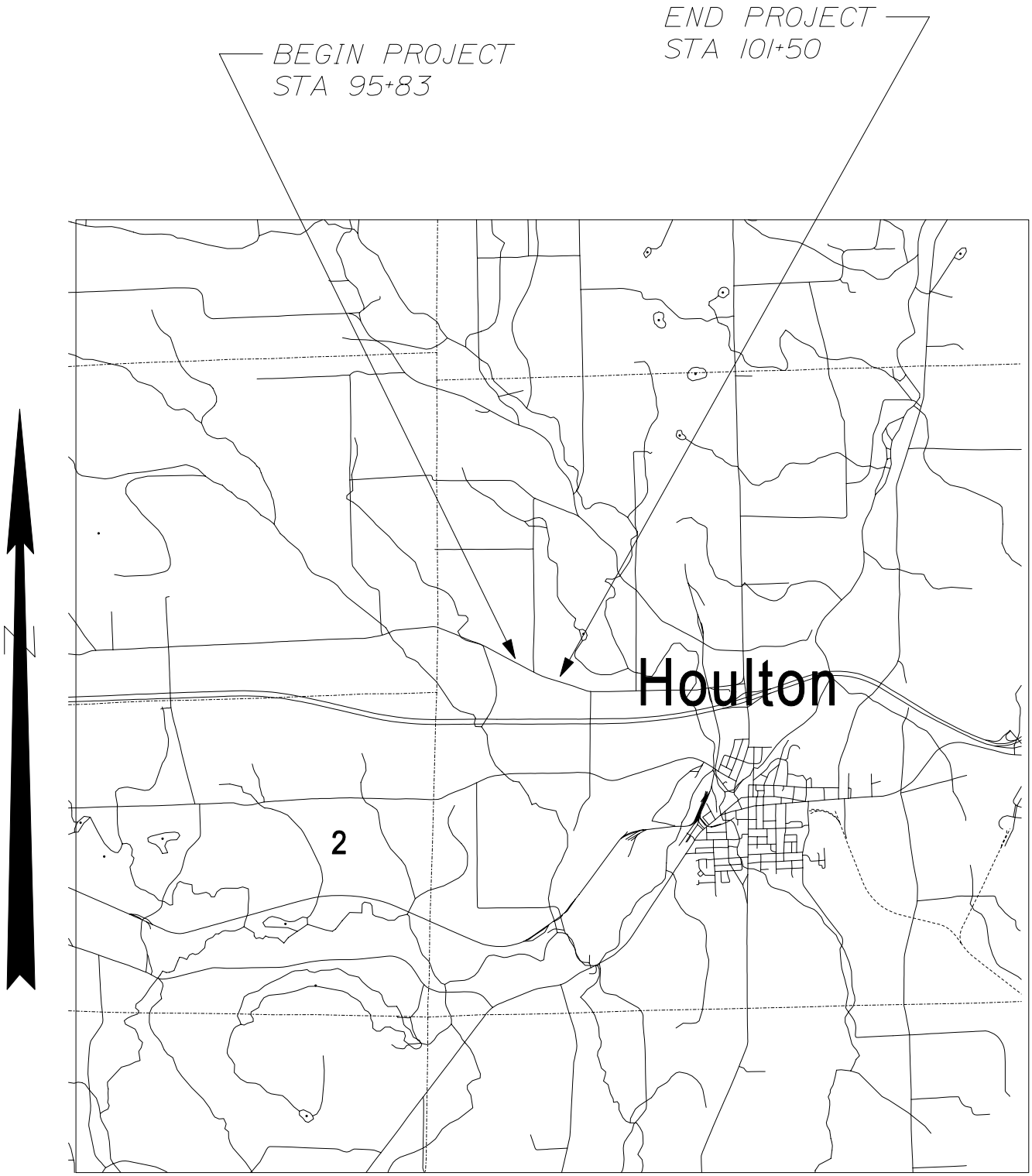

LOCATION MAP

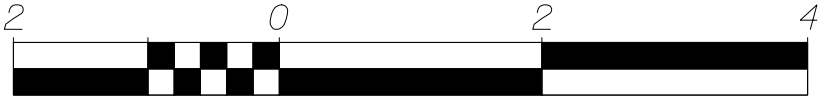

Scale in Miles

February 7, 1996
Supersedes
May 8, 1995

SPECIAL PROVISION
CONSTRUCTION AREA

Title 29A, M.R.S.A., Subsection 2383. Overlimit movement permits

1. Overlimit movement permits issued by State. The Secretary of State, acting under guidelines and advice of the Commissioner of Transportation, may grant permits to move non-divisible objects having a length, width, height or weight greater than specified in this Title over a way or bridge maintained by the Department of Transportation.

2. Permit Fee. The Secretary of State, with the advice of the Commissioner of Transportation, may set the fee for these permits, at not less than $3, nor more than $15, based on weight, height, length and width.

3. County and municipal permits. A permit may be granted, for a reasonable fee, by county commissioners or municipal officers for travel over a way or bridge maintained by that county or municipality.

4. Permits for weight. A vehicle granted a permit for excess weight must first be registered for the maximum gross vehicle weight allowed for that vehicle.

5. Special mobile equipment. The Secretary of State may grant a permit, for no more than one year, to move pneumatic-tire equipment under its own power, including Class A and Class B special mobile equipment, over ways and bridges maintained by the Department of Transportation. The fee for that permit is $15 for each 30-day period.

6. Scope of permit. A permit is limited to the particular vehicle or object to be moved and particular ways and bridges.

7. Construction permits. A permit for a stated period of time may be issued for loads and equipment employed on public way construction projects, United States Government projects or construction of private ways, when within construction areas established by the Department of Transportation. The Permit:

   A. Must be procured from the municipal officers for a construction area within that municipality;
   B. May require the Contractor to be responsible for damage to ways used in the construction areas and ma provide for:
      (1) Withholding by the agency contraction the work of final payment under contract; or
      (2) The furnishing of a bond by the Contractor to guarantee suitable repair or payment damages.
   C. May be granted by the Department of Transportation or by the state engineer in charge of the construction contract; and
   D. For construction areas, carries no fee and does not come within the scope of this section.

8. Gross vehicle weight permits. The following may grant permits to operate a vehicle having a gross vehicle weight exceeding the prescribed limit:

A. The Secretary of State, with the consent of the Department of Transportation, for state and state aid highways and bridges within city or compact village limits;
B. Municipal officers, for all other ways and bridges within that city and compact village limits; and
C. The county commissioners, for county roads and bridges located in unorganized territory.

9. Pilot vehicles and state police escorts. Pilot vehicles required by a permit must be equipped with warning lights and signs as required by the Secretary of State with the advice of the Department of Transportation.

Warning lights may only be operated and lettering on the signs may only be visible on a pilot vehicle while it is escorting on a public way a vehicle with a permit.

The Secretary of State shall require a State Police escort for a single vehicle or a combination of vehicles of 125 feet or more in length or 16 feet or more in width. The Secretary of State, with the advice of the Commissioner of Transportation, may require vehicles of lesser dimensions to be escorted by the State Police.

The Bureau of State Police shall establish a fee for State Police escorts.

All fees collected must be used to defray the cost of services provided.

With the advice of the Commissioner of Transportation and the Chief of the State Police, the Secretary of State shall establish rules for the operation for the operation of pilot vehicles.

10. Taxes paid. A permit for a mobile home may not be granted unless the applicant provides reasonable assurance that all property taxes, sewage disposal charges and drain and sewer assessments applicable to the mobile home, including those for the current tax year, have been paid or that the mobile home is exempt from those taxes.

1993, c. 683, § S-2, eff. January 1, 1995.

Historical and Statutory Notes

Derivation:

R.S. 1954, c. 22 § 98
Laws 1955, c. 389
Laws 1967, c. 3.
Laws 1971, c. 593, § 22.
Laws 1973, c. 213.
Laws 1975, c. 130, §
Laws 1975, c. 319, § 2 .
Laws 1977, c. 73, § 5.
Laws 1981, c. 413.
Laws 1985, c. 225, § 1
Laws 1987. c. 52.
Laws 1987, 781, § 3.
Laws 1989, c. 866, § B-13.
Laws 1991, c. 388, § 8.
Laws 1993, c. 683, § A-1.
Former 29 M.R.S.A. § 2382.

Cross Reference

Collection by Secretary of State, See 29-A M.R.S.A. § 154.

SPECIAL PROVISION
(Consolidated Special Provisions)

SPECIAL PROVISION SECTION 101
CONTRACT INTERPRETATION

101.2 Definitions - Closeout Documentation

Replace the sentence "A letter stating the amount….. DBE goals." with "DBE Goal Attainment Verification Form"

SPECIAL PROVISION SECTION 102
DELIVERY OF BIDS
(Location and Time)

102.7.1 Location and Time Add the following sentence "As a minimum, the Bidder will submit a Bid Package consisting of the Notice to Contractors, the completed Acknowledgement of Bid Amendments & Submission of Bid Bond Validation Number form, the completed Schedule of Items, 2 copies of the completed Agreement, Offer, & Award form, a Bid Bond or Bid Guarantee, and any other Certifications or Bid Requirements listed in the Bid Book."

SPECIAL PROVISION SECTION 103
AWARD AND CONTRACTING

103.3.1 Notice and Information Gathering

Change the first paragraph to read as follows: "After Bid Opening and as a condition for Award of a Contract, the Department may require an Apparent Successful Bidder to demonstrate to the Department's satisfaction that the Bidder is responsible and qualified to perform the Work."

SPECIAL PROVISION SECTION 105
GENERAL SCOPE OF WORK

105.6.2 Contractor Provided Services

Change the first paragraph by the addition of the following as the second sentence: "The Contractor is also responsible for providing construction centerline, or close reference points, for all Utility Facilities relocations and adjustments as necessary to complete the Work."

SPECIAL PROVISION SECTION 106
QUALITY

106.6 Acceptance Add the following to paragraph 1 of A: "This includes Sections 401 - Hot Mix Asphalt, 402 - Pavement Smoothness, and 502 - Structural Concrete - Method A - Air Content."

Add the following to the beginning of paragraph 3 of A: "For pay factors based on Quality Level Analysis, and"

SPECIAL PROVISION SECTION 107
TIME

107.3.1 General Add the following: "If a Holiday occurs on a Sunday, the following Monday shall be considered a Holiday. Sunday or Holiday work must be approved by the Department, except that the Contractor may work on Martin Luther King Day, President's Day, Patriot's Day, the Friday after Thanksgiving, and Columbus Day without the Department's approval."

SPECIAL PROVISION SECTION 108
PAYMENT

108.4 Payment for Materials Obtained and Stored First paragraph, second sentence, delete the words "…Delivered on or near the Work site at acceptable storage places."

SPECIAL PROVISION SECTION 109
CHANGES

109.1.1 Changes Permitted Add the following to the end of the paragraph: "There will be no adjustment to Contract Time due to an increase or decrease in quantities, compared to those estimated, except as addressed through Contract Modification(s)."

109.1.2 Substantial Changes to Major Items Add the following to the end of the paragraph: "Contract Time adjustments may be made for substantial changes to Major Items when the change affects the Critical Path, as determined by the Department"

109.4.4 Investigation / Adjustment In the third sentence, delete the words "subsections (A) - (E)"

109.7.2 Basis of Payment Replace with the following: "Equitable Adjustments will be established by mutual Agreement for compensable items listed in Section 109.7.3-Compensable Items, based upon Unit or Lump Sum Prices. If Agreement cannot be reached, the Contractor shall accept payment on a Force Account basis as provided in Section 109.7.5 - Force Account Work, as full and complete compensation for all Work relating to the Equitable Adjustment."

109.7.3 Compensable Items Replace with the following: "The Contractor is entitled to compensation for the following items, with respect to agreed upon Unit or Lump Sum Prices:

1. Labor expenses for non-salaried Workers and salaried foremen.

2. Costs for Materials.

3. A markup on the totals of Items 1 and 2 of this subsection 109.7.3 for home office overhead and profit of the Contractor, its Subcontractors and suppliers, and any lower tier Subcontractors or suppliers, with no mark-ups on mark-ups.

4. Cost for Equipment, based on Blue Book Rates or leased rates, as set forth in Section 109.7.5(C), or the Contractor's Actual Costs.

5. Costs for extended job-site overhead.

6. Time.

7. Subcontractor quoted Work, as set forth below in Section 109.7.5 (F)."

109.7.5 Force Account Work

C. Equipment

Paragraph 2, delete sentence 1 which starts; "Equipment leased…."

Paragraph 6, change sentence 2 from "The Contractor may furnish…" to read "If requested by the Department, the Contractor will produce cost data to assist the Department in the establishment of such rental rate, including all records that are relevant to the Actual Costs including rental Receipts, acquisition costs, financing documents, lease Agreements, and maintenance and operational cost records."

Add the following paragraph; "Equipment leased by the Contractor for Force Account Work and actually used on the Project will be paid for at the actual invoice amount plus 10% markup for administrative costs."

Add the following section;

"F. Subcontractor Quoted Work When accomplishing Force Account Work that utilizes Subcontractor quoted Work, the Contractor will be allowed a maximum markup of 5% for profit and overhead."

SPECIAL PROVISION SECTION 401
HOT MIX ASPHALT PAVEMENT

401.18 Quality Control Method A & B Make the following change to paragraph a. QCP Administrator; in the final sentence, change "…certified as a Plant Technician or Paving Inspector…" to "…certified as a Quality Assurance Technologist…"

401.201 Method A Under a. Lot Size, add the following; "Each lot will be divided into a minimum of four sublots for mix properties and five sublots for percent TMD."

SPECIAL PROVISION SECTION 402
PAVEMENT SMOOTHNESS

Add the following: "Projects to have their pavement smoothness analyzed in accordance with this Specification will be so noted in Special Provision 403 - Bituminous Box."

"402.02 Lot Size Lot size for smoothness will be 1000 lane-meters [3000 lane-feet]. A sublot will consist of 20 lane-meters [50 lane-feet]. Partial lots will be included in the previous lot if less than one-half the size of a normal lot. If greater than one-half the normal lot size, it will be tested as a separate lot."

SPECIAL PROVISION SECTION 502
STRUCTURAL CONCRETE

502.0502 Quality Assurance Method A - Rejection by Resident Change the first sentence to read: "For an individual sublot with test results failing to meet the criteria in Table #1, or if the calculated pay factor for Air Content is less than 0.80……"

502.0503 Quality Assurance Method B - Rejection by Resident Change the first sentence to read: "For material represented by a verification test with test results failing to meet the criteria in Table #1, the Department will……"

502.0505 Resolution of Disputed Acceptance Test Results Combine the second and third sentence to read: "Circumstances may arise, however, where the Department may ……"

SPECIAL PROVISION SECTION 504
REINFORCING STEEL

504.18 Plates for Fabricated Members Change the second paragraph, first sentence from: "…ASTM A 898/A 898 M…" to "…ASTM A 898/A 898 M or ASTM A 435/A 435 M as applicable and…"

SPECIAL PROVISION SECTION 535
PRECAST, PRESTRESSED CONCRETE SUPERSTRUCTURE

535.02 Materials Change "Steel Strand for Concrete Reinforcement" to "Steel Strand." Add the following to the beginning of the third paragraph; "Concrete shall be Class P conforming to the requirements in this section. 28 day compressive strength shall be as stated on the plans. Coarse aggregate…."

535.26 Lateral Post-Tensioning Replace the first paragraph; "A final tension…" with "Overstressing strands for setting losses cannot be accomplished for chuck to chuck lengths of 7.6 m [25 ft] and less. In such instances, refer to the Plans for all materials and methods. Otherwise, post-tensioning shall be in accordance with PCI standards and shall provide the anchorage force noted in the Plans. The applied jacking force shall be no less than 100% of the design jacking force."

SPECIAL PROVISION SECTION 604
MANHOLES, INLETS, AND CATCH BASINS

604.02 Materials Add the following:

"Tops and Traps	712.07
Corrugated Metal Units	712.08
Catch Basin and Manhole Steps	712.09"

SPECIAL PROVISION SECTION 615
LOAM

615.02 Materials Make the following change:

Organic Content	Percent by Volume
Humus	"5% - 10%", as determined by Ignition Test

SPECIAL PROVISION SECTION 618
SEEDING

618.01 Description Change the first sentence to read as follows: "This work shall consist of furnishing and applying seed ….." Also remove ",and cellulose fiber mulch" from 618.01(a).

618.03 Rates of Application In 618.03(a), remove the last sentence and replace with the following: "These rates shall apply to Seeding Method 2, 3, and Crown Vetch."

In 618.03(c) "1.8 kg [4 lb]/unit." to "1.95 kg [4 lb]/unit."

618.09 Construction Method In 618.09(a) 1, sentence two, replace "100 mm [4 in]" with "25 mm [1 in] (Method 1 areas) and 50 mm [2 in] (Method 2 areas)"

618.15 Temporary Seeding Change the Pay Unit from Unit to Kg [lb].

SPECIAL PROVISION SECTION 620
GEOTEXTILES

620.03 Placement Section (c)

Title: Replace "Non-woven" in title with "Erosion Control".
First Paragraph: Replace first word "Non-woven" with "Woven monofilament".
Second Paragraph: Replace second word "Non-woven" with "Erosion Control".

620.07 Shipment, Storage, Protection and Repair of Fabric Section (a)

Replace the third sentence with the following: "Damaged geotextiles, as identified by the Resident, shall be repaired immediately."

620.09 Basis of Payment

Pay Item 620.58: Replace "Non-woven" with "Erosion Control"
Pay Item 620.59: Replace "Non-woven" with "Erosion Control"

SPECIAL PROVISION SECTION 626
HIGHWAY SIGNING

626.034 Concrete Foundations Add to the following to the end of the second paragraph: "Pre-cast and cast-in-place foundations shall be warranteed against leaning and corrosion for two years after the project is completed. If the lean is greater than 2 degrees from normal or the foundation is spalling within the first two years, the Contractor shall replace the foundation at no extra cost."

SPECIAL PROVISION SECTION 637
DUST CONTROL

637.06 Basis of Payment Add the following after the second sentence of the third paragraph: "Failure by the Contractor to follow Standard Specification or Special Provision - Section 637 and/or the Contractor's own Soil Erosion and Pollution Control Plan concerning Dust Control and/or the Contractor's own Traffic Control Plan concerning Dust Control and/or visible evidence of excessive dust problems, as determined by the Resident, will result in a reduction in payment, computed by reducing the Lump Sum Total by 5% per occurrence per day. The Department's Resident or any other representative of the Department reserves the right to suspend the work at any time and request a meeting to discuss violations and remedies. The Department shall not be held responsible for any delay in the work due to any suspension under this item. Additional penalties may also be assessed in accordance with Special Provision 652 - Work Zone Traffic Control and Standard Specification 656 - Temporary Soil Erosion and Water Pollution Control."

SPECIAL PROVISION SECTION 652
MAINTENANCE OF TRAFFIC

652.8.2 Other Items Replace the last paragraph with the following: "There will be no payment made under any 652 pay items after the expiration of the adjusted total contract time."

SPECIAL PROVISION SECTION 656
TEMPORARY SOIL EROSION AND WATER POLLUTION CONTROL

656.5.1 If Pay Item 656.75 Provided Replace the second paragraph with the following: "Failure by the Contractor to follow Standard Specification or Special Provision - Section 656 and/or the Contractor's own Soil Erosion and Pollution Control Plan will result in a reduction in payment, computed by reducing the Lump Sum Total by 5% per occurrence per day. The Department's Resident or any other representative of the Department reserves the right to suspend the work at any time and request a meeting to discuss violations and remedies. The Department shall not be held responsible for any delay in the work due to any suspension under this item."

SPECIAL PROVISION SECTION 703
AGGREGATES

703.22 Underdrain Backfill Material Change the first paragraph from "…for Underdrain Type B…" to "…for Underdrain Type B and C…"

SPECIAL PROVISION SECTION 709
REINFORCING STEEL AND WELDED STEEL WIRE FABIC

709.03 Steel Strand Change the second paragraph from "…shall be 12mm [½ inch] AASHTO M203M/M203 (ASTM A416/A416M)…" to "…shall be 15.24 mm [0.600 inch] diameter AASHTO M203 (ASTM A416)…"

SPECIAL PROVISION SECTION 712
MISCELLANEOUS HIGHWAY MATERIALS

Add the following:

"712.07 Tops, and Traps These metal units shall conform to the plan dimensions and to the following specification requirements for the designated materials.

Gray iron castings shall conform to the requirements of AASHTO M105, Class 30, unless otherwise designated.

Carbon steel castings shall conform to the requirements of AASHTO M103/M103M. Grade shall be 450-240 [65-35] unless otherwise designated.

Structural steel shall conform to the requirements of AASHTO M183/M183M or ASTM A283/A283M, Grade B or better. Galvanizing, where specified for these units, shall conform to the requirements of AASHTO M111.

712.08 Corrugated Metal Units The units shall conform to plan dimensions and the metal to AASHTO M36/M36M. Bituminous coating, when specified, shall conform to AASHTO M190 Type A.

712.09 Catch Basin and Manhole Steps Steps for catch basins and for manholes shall conform to ASTM C478M [ASTM C478], Section 13 for either of the following material:

(a) Aluminum steps-ASTM B221M, [ASTM B211] Alloy 6061-T6 or 6005-T5.

(b) Reinforced plastic steps Steel reinforcing bar with injection molded plastic coating copolymer polypropylene. Polypropylene shall conform to ASTM D 4101.

712.23 Flashing Lights Flashing Lights shall be power operated or battery operated as specified.

(a) Power operated flashing lights shall consist of housing, adapters, lamps, sockets, reflectors, lens, hoods and other necessary equipment designed to give clearly visible

signal indications within an angle of at least 45 degrees and from 3 to 90 m [10 to 300 ft] under all light and atmospheric conditions.

Two circuit flasher controllers with a two-circuit filter capable of providing alternate flashing operations at the rate of not less than 50 nor more than 60 flashes per minute shall be provided.

The lamps shall be 650 lumens, 120 volt traffic signal lamps with sockets constructed to properly focus and hold the lamp firmly in position.
The housing shall have a rotatable sun visor not less than 175 mm [7 in] in length designed to shield the lens.

Reflectors shall be of such design that light from a properly focused lamp will reflect the light rays parallel. Reflectors shall have a maximum diameter at the point of contact with the lens of approximately 200 mm [8 in].

The lens shall consist of a round one-piece convex amber material which, when mounted, shall have a visible diameter of approximately 200 mm [8 in]. They shall distribute light and not diffuse it. The distribution of the light shall be asymmetrical in a downward direction. The light distribution of the lens shall not be uniform, but shall consist of a small high intensity portion with narrow distribution for long distance throw and a larger low intensity portion with wide distribution for short distance throw. Lenses shall be marked to indicate the top and bottom of the lens.

(b) Battery operated flashing lights shall be self- illuminated by an electric lamp behind the lens. These lights shall also be externally illuminated by reflex-reflective elements built into the lens to enable it to be seen by reflex-reflection of the light from the headlights of oncoming traffic. The batteries must be entirely enclosed in a case. A locking device must secure the case. The light shall have a flash rate of not less than 50 nor more than 60 flashes per minute from minus 30 °C [minus 20 °F] to plus 65 °C [plus 150 °F]. The light shall have an on time of not less than 10 percent of the flash cycle. The light beam projected upon a surface perpendicular to the axis of the light beam shall produce a lighted rectangular projection whose minimum horizontal dimension shall be 5 degrees each side of the horizontal axis. The effective intensity shall not have an initial value greater than 15.0 candelas or drop below 4.0 candelas during the first 336 hours of continuous flashing. The illuminated lens shall appear to be uniformly bright over its entire illuminated surface when viewed from any point within an angle of 9 degrees each side of the vertical axis and 5 degrees each side of the horizontal axis. The lens shall not be less than 175 mm [7 in] in diameter including a reflex-reflector ring of 13 mm [½ in] minimum width around the periphery. The lens shall be yellow in color and have a minimum relative luminous transmittance of 0.440 with a luminance of 2854° Kelvin. The lens shall be one-piece construction. The lens material shall be plastic and meet the luminous transmission requirements of this specification. The case containing the batteries and

circuitry shall be constructed of a material capable of withstanding abuse equal to or greater than 1.21 mm thick steel [No. 18 U.S. Standard Gage Steel]. The housing and the lens frame, if of metal shall be properly cleaned, degreased and pretreated to promote adhesion. It shall be given one or more coats of enamel which, when dry shall completely obscure the metal. The enamel coating shall be of such quality that when the coated case is struck a light blow with a sharp tool, the paint will not chip or crack and if scratched with a knife will not powder. The case shall be so constructed and closed as to exclude moisture that would affect the proper operation of light. The case shall have a weep hole to allow the escape of moisture from condensation. Photoelectric controls, if provided, shall keep the light operating whenever the ambient light falls below 215 lx [20 foot candles]. Each light shall be plainly marked as to the manufacturer's name and model number.

If required by the Resident, certification as to conformance to these specifications shall be furnished based on results of tests made by an independent testing laboratory. All lights are subject to random inspection and testing. All necessary random samples shall be provided to the Resident upon request without cost to the Department. All such samples shall be returned to the Contractor upon completion of the tests.

712.32 Copper Tubing Copper tubing and fittings shall conform to the requirements of ASTM B88M Type A [ASTM B88, Type K] or better.

712.33 Non-metallic Pipe, Flexible Non-metallic pipe and pipe fittings shall be acceptable flexible pipe manufactured from virgin polyethylene polymer suitable for transmitting liquids intended for human or animal consumption.

712.34 Non-metallic Pipe, Rigid Non-metallic pipe shall be Schedule 40 polyvinylchloride (PVC) that meets the requirement of ASTM D1785. Fittings shall be of the same material.

712.341 Metallic Pipe Metallic pipe shall be ANSI, Standard B36.10, Schedule 40 steel pipe conforming to the requirements of ASTM A53 Types E or S, Grade B. End plates shall be steel conforming to ASTM A36/A36M.

Both the sleeve and end plates shall be hot dip galvanized. Pipe sleeve splices shall be welded splices with full penetration weld before galvanizing.

712.35 Epoxy Resin Epoxy resin for grouting or sealing shall consist of a mineral filled thixotropic, flexible epoxy resin having a pot life of approximately one hour at 10°C [50°F]. The grout shall be an approved product suitable for cementing steel dowels into the preformed holes of curb inlets and adjacent curbing. The sealant shall be an approved product, light gray in color and suitable for coating the surface.

712.36 Bituminous Curb The asphalt cement for bituminous curb shall be of the grade required for the wearing course, or shall be Viscosity Grade AC-20 meeting the current requirements of Subsection 702.01 Asphalt Cement. The aggregate shall conform to the requirements of Subsection 703.07. The coarse aggregate portion retained on the 2.36 mm [No. 8] sieve may be either crushed rock or crushed gravel.

The mineral constituents of the bituminous mixture shall be sized and graded and combined in a composite blend that will produce a stable durable curbing with an acceptable texture.
Bituminous material for curb shall meet the requirements of Section 403 - Hot Bituminous Pavement.

712.37 Precast Concrete Slab Portland cement concrete for precast slabs shall meet the requirements of Section 502 - Structural Concrete, Class A.

The slabs shall be precast to the dimension shown on the plans and cross section and in accordance with the Standard Detail plans for Concrete Sidewalk Slab. The surface shall be finished with a float finish in accordance with Subsection 502.14(c). Lift devices of sufficient strength to hold the slab while suspended from cables shall be cast into the top or back of the slab.

712.38 Stone Slab Stone slabs shall be of granite from an acceptable source, hard, durable, predominantly gray in color, free from seams which impair the structural integrity and be of smooth splitting character. Natural color variations characteristic of the deposit will be permitted. Exposed surfaces shall be free from drill holes or indications of drill holes. The granite slabs in any one section of backslope must be all the same finish.

The granite slabs shall be scabble dressed or sawed to an approximately true plane having no projections or depressions over 13 mm [½ in] under a 600 mm [2 ft] straightedge or over 25 mm [1 in] under a 1200 mm [4 ft] straightedge. The arris at the intersection of the top surface and exposed front face shall be pitched so that the arris line is uniform throughout the length of the installed slabs. The sides shall be square to the exposed face unless the slabs are to be set on a radius or other special condition which requires that the joints be cut to fit, but in any case shall be so finished that when the stones are placed side by side no space more than 20 mm [3/4 in] shall show in the joint for the full exposed height.

Liftpin holes in all sides will be allowed except on the exposed face.

SPECIAL PROVISION SECTION 717
ROADSIDE IMPROVEMENT MATERIAL

717.05 Mulch Binder. Change the third sentence to read as follows:

"Paper fiber mulch may be used as a binder at the rate of 2.3 kg/unit [5 lb/unit]."

Towns: **Houlton, Ludlow Rd,**
Projects:**PIN 11116.00**
Date: **February 2, 2004**

SPECIAL PROVISIONS
SECTION 104
Utilities

MEETING

A Pre-construction Utility Conference, as defined in Subsection 104.4.6 of the Standard Specifications **is not** required.

GENERAL INFORMATION

These Special Provisions outline the arrangements that have been made by the Department for utility and/or railroad work to be undertaken in conjunction with this project. The following list identifies all known utilities or railroads having facilities presently located within the limits of this project or intending to install facilities during project construction.

Overview:

Utility/Railroad	Aerial	Underground
Houlton Water District (Water & Electricity)	X	
Maine Public Service	X	X
Verizon	X	

Temporary utility adjustments are **not** anticipated. If temporary relocation becomes necessary, sufficient time will need to be allowed prior to the construction for all required temporary relocation.

All utility crossings over highways will provide not less than 18 feet vertical clearance over existing ground in cut or over finished grade in fill, during construction of this project.

Any times and dates mentioned are estimates only and are dependent upon favorable weather, working conditions, and freedom from emergencies. The Contractor shall have no claim against the Department if they are exceeded.

Manholes, valve boxes, service connections, and similar incidental utility plant are to be adjusted by the appropriate utility in cooperation with work being done by the Contractor.

AERIAL

No Aerial Utility adjustments are anticipated as part of this project. All above ground utility locations (hydrants, poles, guys, etc.) will be reviewed for compliance with the Department's Above Ground Pole Policy following the completion of the paving operation. Any above ground utility locations not meeting the Department's Above Ground Pole Policy will require relocation to the proper offset.

Towns: **Houlton, Ludlow Rd,**
Projects:**PIN 11116.00**
Date: **February 2, 2004**

UTILITY SIGNING

Any utility working within the construction limits of this project shall ensure that the traveling public is adequately protected at all times. All work areas shall be signed, lighted, and traffic flaggers employed as determined by field conditions. All traffic controls shall be in accordance with the latest edition of the Manual on Uniform Traffic Control Devices for Streets and Highways, as issued by the Federal Highway Administration.

SAFE PRACTICES AROUND UTILITY FACILITIES

The Contractor shall be responsible for complying with M.R.S.A. Title 35-A, Chapter 7-A Sections 751 - 761 Overhead High-Voltage Line Safety Act. Prior to commencing any work that may come within ten (10) feet of any aerial electrical line; the Contractor shall notify the aerial utilities as per Section 757 of the above act.

DIG SAFE

The Contractor shall be responsible for determining the presence of underground utility facilities prior to commencing any excavation work and shall notify utilities of proposed excavation in accordance with M.R.S.A. Title 23 §3360-A, Maine "Dig Safe" System.

MAINTAINING UTILITY LOCATION MARKINGS

The Contractor will be responsible for maintaining the buried utility location markings following the initial locating by the appropriate utility or their designated representative.

THE CONTRACTOR SHALL PLAN AND CONDUCT HIS WORK ACCORDINGLY.

The following utilities are known to be located on this project:

Houlton Water Company (Electric)	Steve Socoby	532-2350
Maine Public Service	Dennis Drew	760-2550
Verizon	Rick Cross	764-7416
	Frank Connolly (Location)	990-5263

Towns: **Houlton, Rt. 1**
Projects:**NH -1138(700)E, PIN 11387.00**
NH-1138(900)E, PIN 11389.00
Date: **February 2, 2004**

SPECIAL PROVISIONS
SECTION 104
Utilities

MEETING

A Pre-construction Utility Conference, as defined in Subsection 104.4.6 of the Standard Specifications **is** required.

GENERAL INFORMATION

These Special Provisions outline the arrangements that have been made by the Department for utility and/or railroad work to be undertaken in conjunction with this project. The following list identifies all known utilities or railroads having facilities presently located within the limits of this project or intending to install facilities during project construction
.

Overview:

Utility/Railroad	Aerial	Underground
Houlton Water District (Water, Sewer & Electricity)	X	X
Houlton CATV, Inc.	X	
Verizon	X	X
Town of Houlton		X

Temporary utility adjustments are **not** anticipated. If temporary relocation becomes necessary, sufficient time will need to be allowed prior to the construction for all required temporary relocation.

All utility crossings over highways will provide not less than 18 feet vertical clearance over existing ground in cut or over finished grade in fill, during construction of this project.

Any times and dates mentioned are estimates only and are dependent upon favorable weather, working conditions, and freedom from emergencies. The Contractor shall have no claim against the Department if they are exceeded.

Manholes, valve boxes, service connections, and similar incidental utility plant are to be adjusted by the appropriate utility in cooperation with work being done by the Contractor.

AERIAL

No Aerial Utility adjustments are anticipated as part of this project. All above ground utility locations (hydrants, poles, guys, etc.) will be reviewed for compliance with the Department's Above Ground Pole Policy following the completion of the paving operation. Any above ground utility locations not meeting the Department's Above Ground Pole Policy will require relocation to the proper offset.

Towns: **Houlton, Rt. 1**
Projects:**NH -1138(700)E, PIN 11387.00**
NH-1138(900)E, PIN 11389.00
Date: **February 2, 2004**

SUBSURFACE

Utility	Summary of Work	Estimated Working Days
Houlton Water Company	Loosen / Lower Structures	10
	Adjust structures to finish grade	10

The **Houlton Water Company** is responsible for both water and sewer structures on the Houlton Projects. Contractor shall notify **Houlton Water Company** at least three (3) days prior to any excavating operations to allow the utility to determine facility locations in that area.

The **Houlton Water Company** will require 10 working days to loosen and or lower their structures before the milling process. The Houlton Water Company will than require 10 days raise their structures to finish grade before final paving but after the shim process. Additional days may be required for repairs to any structures that are found to be broken or not operating properly. The contact for **Houlton Water Company** is Chris McGuire at 532-2350 for water and sewer issues.

UTILITY SIGNING

Any utility working within the construction limits of this project shall ensure that the traveling public is adequately protected at all times. All work areas shall be signed, lighted, and traffic flaggers employed as determined by field conditions. All traffic controls shall be in accordance with the latest edition of the Manual on Uniform Traffic Control Devices for Streets and Highways, as issued by the Federal Highway Administration.

SAFE PRACTICES AROUND UTILITY FACILITIES

The Contractor shall be responsible for complying with M.R.S.A. Title 35-A, Chapter 7-A Sections 751 - 761 Overhead High-Voltage Line Safety Act. Prior to commencing any work that may come within ten (10) feet of any aerial electrical line; the Contractor shall notify the aerial utilities as per Section 757 of the above act.

DIG SAFE

The Contractor shall be responsible for determining the presence of underground utility facilities prior to commencing any excavation work and shall notify utilities of proposed excavation in accordance with M.R.S.A. Title 23 §3360-A, Maine "Dig Safe" System.

MAINTAINING UTILITY LOCATION MARKINGS

The Contractor will be responsible for maintaining the buried utility location markings following the initial locating by the appropriate utility or their designated representative.

THE CONTRACTOR SHALL PLAN AND CONDUCT HIS WORK ACCORDINGLY.

The following utilities are known to be located on this project:

Houlton Water Company (Electric) Steve Socoby 532-2350

Towns: **Houlton, Rt. 1**
Projects: **NH -1138(700)E, PIN 11387.00**
NH-1138(900)E, PIN 11389.00
Date: **February 2, 2004**

Maine Public Service	Dennis Drew	760-2550
Houlton CATV, Inc.	Dana Williamson	532-2579
Verizon	Rick Cross	764-7416
	Frank Connolly (Location)	990-5263
Town of Houlton	Leigh Stilwell	532-1325
Houlton Water Company	Chris McGuire	532-2350

Towns: **Houlton, Rt. 1**
Houlton-Littleton Rt. 1
Mars Hill – Westfield, Rt. 1
Projects: **STP-1138(800)X, PIN 11388.00**
STP-1139(000)X, PIN 11390.00
NH-1139(200)E, PIN 11392.00
Date: **February 2, 2004**

SPECIAL PROVISIONS
SECTION 104
Utilities

MEETING

A Pre-construction Utility Conference, as defined in Subsection 104.4.6 of the Standard Specifications **is** required.

GENERAL INFORMATION

These Special Provisions outline the arrangements that have been made by the Department for utility and/or railroad work to be undertaken in conjunction with this project. The following list identifies all known utilities or railroads having facilities presently located within the limits of this project or intending to install facilities during project construction
.

Overview:

Utility/Railroad	Aerial	Underground
Houlton Water District (Water, Sewer & Electricity)	X	X
Maine Public Service	X	
Houlton CATV, Inc.	X	
Verizon	X	X
Town of Houlton		X

Temporary utility adjustments are **not** anticipated. If temporary relocation becomes necessary, sufficient time will need to be allowed prior to the construction for all required temporary relocation.

All utility crossings over highways will provide not less than 18 feet vertical clearance over existing ground in cut or over finished grade in fill, during construction of this project.

Any times and dates mentioned are estimates only and are dependent upon favorable weather, working conditions, and freedom from emergencies. The Contractor shall have no claim against the Department if they are exceeded.

Manholes, valve boxes, service connections, and similar incidental utility plant are to be adjusted by the appropriate utility in cooperation with work being done by the Contractor.

Towns: **Houlton, Rt. 1**
Houlton-Littleton Rt. 1
Mars Hill – Westfield, Rt. 1
Projects: **STP-1138(800)X, PIN 11388.00**
STP-1139(000)X, PIN 11390.00
NH-1139(200)E, PIN 11392.00
Date: **February 2, 2004**

AERIAL

No Aerial Utility adjustments are anticipated as part of this project. All above ground utility locations (hydrants, poles, guys, etc.) will be reviewed for compliance with the Department's Above Ground Pole Policy following the completion of the paving operation. Any above ground utility locations not meeting the Department's Above Ground Pole Policy will require relocation to the proper offset.

SUBSURFACE

Houlton Water Company has facilities on the PIN 11388.00 project. Contractor shall notify **Houlton Water Company** at least three (3) days prior to any excavating operations to allow the utility to determine facility locations in that area. Working days needed to adjust structures are included in Special Provision Section 104 for PINs 11387.00 & 11389.00. Additional days may be required for repairs to any structures that are found to be broken or not operating properly. The contact for **Houlton Water Company** is Chris McGuire at 532-2350.

UTILITY SIGNING

Any utility working within the construction limits of this project shall ensure that the traveling public is adequately protected at all times. All work areas shall be signed, lighted, and traffic flaggers employed as determined by field conditions. All traffic controls shall be in accordance with the latest edition of the Manual on Uniform Traffic Control Devices for Streets and Highways, as issued by the Federal Highway Administration.

SAFE PRACTICES AROUND UTILITY FACILITIES

The Contractor shall be responsible for complying with M.R.S.A. Title 35-A, Chapter 7-A Sections 751 - 761 Overhead High-Voltage Line Safety Act. Prior to commencing any work that may come within ten (10) feet of any aerial electrical line; the Contractor shall notify the aerial utilities as per Section 757 of the above act.

DIG SAFE

The Contractor shall be responsible for determining the presence of underground utility facilities prior to commencing any excavation work and shall notify utilities of proposed excavation in accordance with M.R.S.A. Title 23 §3360-A, Maine "Dig Safe" System.

MAINTAINING UTILITY LOCATION MARKINGS

The Contractor will be responsible for maintaining the buried utility location markings following the initial locating by the appropriate utility or their designated representative.

THE CONTRACTOR SHALL PLAN AND CONDUCT HIS WORK ACCORDINGLY.

Towns: **Houlton, Rt. 1**
Houlton-Littleton Rt. 1
Mars Hill – Westfield, Rt. 1
Projects: **STP-1138(800)X, PIN 11388.00**
STP-1139(000)X, PIN 11390.00
NH-1139(200)E, PIN 11392.00
Date: **February 2, 2004**

The following utilities are known to be located on this project:

Houlton Water Company (Electric)	Steve Socoby	532-2350
Maine Public Service	Dennis Drew	760-2550
Houlton CATV, Inc.	Dana Williamson	532-2579
Verizon	Rick Cross	764-7416
	Frank Connolly (Location)	990-5263
Town of Houlton	Leigh Stilwell	532-1325
Houlton Water Company	Chris McGuire	532-2350

SPECIAL PROVISION
SECTION 107
SCHEDULING OF WORK

Replace Section 107.4.2 with the following:

"107.4.2 Schedule of Work Required Within 21 Days of Contract Execution and before beginning any on-site activities, the Contractor shall provide the Department with its Schedule of Work. The Contractor shall plan the Work, including the activity of Subcontractors, vendors, and suppliers, such that all Work will be performed in Substantial Conformity with its Schedule of Work. The Schedule must include sufficient time for the Department to perform its functions as indicated in this Contract, including QA inspection and testing, approval of the Contractor's TCP, SEWPCP and QCP, and review of Working Drawings.

At a minimum, the Schedule of Work shall include a bar chart which shows the major Work activities, milestones, durations, and a timeline. Milestones to be included in the schedule include: (A) start of Work, (B) beginning and ending of planned Work suspensions, (C) Completion of Physical Work, and (D) Completion. If the Contractor Plans to Complete the Work before the specified Completion date, the Schedule shall so indicate.

Any restrictions that affect the Schedule of Work such as paving restrictions or In-Stream Work windows must be charted with the related activities to demonstrate that the Schedule of Work complies with the Contract.

The Department will review the Schedule of Work and provide comments to the Contractor within 20 days of receipt of the schedule. The Contractor will make the requested changes to the schedule and issue the finalized version to the Department."

Special Provision
Section 107
Prosecution and Progress
(Contract Time)

1. **The contractor will be allowed to commence work on or after May 17, 2004 provided that all required plans/submittals have been received and approved by the MDOT.**

2. **Only one paving operation will be allowed excluding hand placed paving unless approved by the Resident.**

3. **A 24 hour notice will be required for any changes in the work schedule.**

4. **Contractor will not be allowed to work on more than two projects simultaneously unless otherwise approved by the resident.**

5. **For every weekday not worked once operations commence, the contractor will be charged liquidated damages in the amount of $750 (excluding inclement weather days).**

6. **The completion date for this contract is September 17, 2004.**

December 22, 2003
Supersedes December 12, 2002

SPECIAL PROVISION
SECTION 401
HOT MIX ASPHALT
(¾ inch (20mm) Surface Treatment)

Description The Contractor shall furnish and place one or more courses of Hot Mix Asphalt (HMA) pavement on an approved base in accordance with the Contract documents and in reasonably close conformity with the lines, grades, thicknesses and typical cross sections shown on the plans or established. The Department shall accept this work under Quality Assurance provisions as specified in Standard Specifications Section 401 – Hot Mix Asphalt Pavement, and Standard Specifications Section 106 - Quality.

The 20 mm [¾ in] HMA Surface Course shall meet all of the Materials, Seasonal Limitations and Construction requirements of Section 401, with the following additions and changes.

GRADATION REQUIREMENTS

Sieve Size	Percent Passing
12.5 mm	100
9.5 mm	95-100
4.75 mm	-95
2.36 mm	32-67
1.18 mm	-
0.600 mm	-
0.300 mm	-
0.075 mm	2-10

VOLUMETRIC DESIGN CRITERIA

Voids at N_{des}	4.0
VMA	15.0 minimum
VFB	65-80
Fines/Eff.Binder	0.6-1.2

A test strip at a nominal depth of 30mm [1¼ in], full lane width, shall be required if the JMF has *not been* used or approved on a MDOT project in the current calendar year. If a test strip is required, it shall conform to the following requirements:

On roads open to two way traffic, the test strip shall be placed over the full width of the travel way section, not to exceed 600 meters [2000 ft] in length, or 400 Mg [440 ton] production. Prior to the placement of the test strip a passing verification test is required. A fog coat of Item 409.15, Bituminous Tack Coat, shall be applied to the level course prior to the placement of the 20mm Surface Treatment Course, payment to be made under the 409.15 pay item.
The test strip **shall not** be excluded from QA analysis, but will be evaluated in accordance with Section 401.03. The Contractor shall notify the Department at least 48 hours in advance of placing

the test strip. The test strip is intended to allow the Contractor to establish a method of compaction for the 20mm [¾ in] surface course areas. Once the methods are established, rolling patterns, equipment, and methods will become part of the QCP. The test strip will allow for any necessary adjustments to the mix design and or plant mixing procedures, as well as for the Department to evaluate the quality of the pavement.

Mix samples and cores will be obtained from the test strip. A minimum of three mix samples shall be randomly selected from the test strip. Five cores shall be randomly sampled from the mat and tested for density verification. Should the resulting core values average less than 92.0% TMD, (average of 5 tests), the Department will reject the strip. The Contractor will remove and replace rejected test strips at their expense. After completion of the test strip, the Contractor shall make any final adjustments to the job mix formula in accordance to Standard Specifications, Section 401, subsection 401.03 - Composition of Mixtures, or compaction method. Paving operations shall not resume until the Contractor and the Department determines that material meeting the Contract requirements can be produced, and any changes to the Job Mix Formula have been approved by the Department. The Department shall pay for an accepted test strip as determined Section 401.222 – Pay Factor A and B, for this item. A new test strip shall be required if a current lot is terminated or completed, and a new lot is started.

The Department may halt the production and placement of the 20mm [¾ in] HMA Surface Course and require the construction of a new test strip if the Department finds that material being produced, hauled, or placed does not meet the requirements of Sections 401.08 through 401.18.

The Contractor shall sample, test, and evaluate Hot Mix Asphalt Pavement in accordance with the minimum frequencies outlined in Section 401, Table 2: Minimum Quality Control Frequencies.

The Contractor shall monitor plant production using running average of three control charts as specified in Section 106, and Control Limits as specified in Section 401, Table 3: Control Limits.

The Acceptance Criteria shall be as specified in Section 401, Table 4: Acceptance Criteria.

The Acceptance Limit targets will be as specified on the JMF, and the Department will use the appropriate Acceptance Limits table from Section, Table 5: Method A, or Table 7: Method B and C, for the acceptance method noted in the Special Provision 403.

The Contractor shall cease paving operations whenever one of the following occurs on a lot in progress:

a) The Pay Factor for VMA, Voids @ N_d, Percent PGAB, composite gradation, VFB, fines to effective binder or density using all Acceptance or all Quality Control tests for the current lot is less than 0.85.
b) The Coarse Aggregate Angularity or Fine Aggregate Angularity value falls below the requirements of Section 703.07 , Table 3, for the design traffic level.
c) Each of the first 2 control tests for the lot fall outside the upper or lower limits for VMA, Voids @ Nd, or Percent PGAB. This includes any case where both tests are out on the same, or different properties.

d) The Flat and Elongated Particles value exceeds 10 percent by ASTM D-4791.
e) There is any visible damage to the aggregate due to over-densification other than on variable depth shim courses.
f) The Contractor fails to follow the approved QCP.
g) The Contractors control chart shows the process to be out of control on any property listed in Section 401, subsection 401.18 , Table 3: Control Limits

Price Adjustment The Department will apply price adjustments for the Hot Mix Asphalt utilized under this Special Provision as outlined in Section 401.222 : Pay Factor for methods A and B; mixes with Volumetric Property requirements.

Dispute Resolution The Contractor may dispute an acceptance test for this item as outlined in Section 401.223 for PGAB, Air Void, and VMA Content only.

Method of Measurement The Department will measure Hot Mix Asphalt pavement by the megagram in accordance with Section 109 - Measurement and Payment.

Basis of Payment The Department will pay for the Work, in place and accepted, in accordance with the applicable sections of the Special Provisions at the contract unit price per megagram(ton).

Payment will be made under:

Pay Item	Pay Unit
403.210 9.5mm Hot Mix Asphalt Pavement	Megagram (ton)

Houlton
Ludlow Road
11116.00
Intersection Improvements
Hot Mix Asphalt Overlay
February 27, 2004

SPECIAL PROVISION
SECTION 403
HOT MIX ASPHALT OVERLAY

Desc. of Course	Grad. Design	Item Number	Bit Cont. % of Mix	Total Thick	No. of Layers	Comp. Notes
			Reconstruction Area			
			Mainline Travelway			
Wearing	9.5mm	403.210	N/A	1 ¼"	1	4,9,17
Base	12.5mm	403.213	N/A	1 ¾"	1/more	4,9,17
			Drives, Misc.			
Wearing	9.5mm	403.209	N/A	1 ½ "	1/more	2,3,9,10,13

COMPLEMENTARY NOTES

2. The density requirements are waived.
3. The design traffic level for mix placed shall be <0.3 million ESALS.
4. The design traffic level for mix placed shall be 0.3 to <3 million ESALS.
7. Section 106.6 Acceptance, (1) Method A.
9. Section 106.6 Acceptance, (2) Method C.
10. A **"FINE"** 9.5 mm mix with a gradation above or through the restricted zone shall be used for this item.
13. A mixture meeting the requirements of section 703.09 Grading 'D', with a minimum PGAB content of 6%, and the limits of Special Provision 401, Table 9 (Drives and Sidewalks) for PGAB content and gradation may be substituted for this item. A job mix formula shall be submitted to the department for approval.
17. The density requirements are as per Specification 401, Method C.

Tack Coat

A tack coat of emulsified asphalt, RS-1 or HFMS-1, Item 409.15 shall be applied to any existing pavement at a rate of approximately 0.025 gal/yd², and on milled pavement approximately 0.05 gal/yd², prior to placing a new course. A fog coat of emulsified asphalt shall be applied between shim / intermediate course and the surface course, at a rate not to exceed 0.025 gal/yd².

Tack used between layers of pavement will be paid for at the contract unit price for Item 409.15 Bituminous Tack Coat.

SPECIAL PROVISION
SECTION 403
HOT MIX ASPHALT OVERLAY

Desc. of Course	Grad. Design	Item Number	Bit Cont. % of Mix	Total Thick	No. of Layers	Comp. Notes
			Mainline Travelway and Shoulders			
			¾ inch Overlay			
Wearing	9.5mm	403.210	N/A	¾"	1	4,7,20,22
Shim	9.5mm	403.211	N/A	variable	1/more	2,4,7,20
			Mainline Travelway and Shoulders			
			Mill and Overlay Areas			
Wearing	9.5mm	403.210	N/A	1 ¼"	1	4,7
Base	12.5mm	403.213	N/A	1 ¾"	1/more	4,7
			Approach Roads			
Wearing	9.5mm	403.210	N/A	¾"- 1 ½"	1	4,7,
			Drives, Misc.			
Wearing	9.5mm	403.209	N/A	¾" – 1 ½"	1/more	2,3,9,10,13

COMPLEMENTARY NOTES

2. The density requirements are waived.
3. The design traffic level for mix placed shall be <0.3 million ESALS.
4. The design traffic level for mix placed shall be 0.3 to <3 million ESALS.
7. Section 106.6 Acceptance, (1) Method A.
9. Section 106.6 Acceptance, (2) Method C.
10. A **"FINE"** 9.5 mm mix with a gradation above or through the restricted zone shall be used for this item.
13. A mixture meeting the requirements of section 703.09 Grading 'D', with a minimum PGAB content of 6%, and the limits of Special Provision 401, Table 9 (Drives and Sidewalks) for PGAB content and gradation may be substituted for this item. A job mix formula shall be submitted to the department for approval.
20. The Contractor may place the specified HMA pavement course, not to exceed ¾ inch (20mm) compacted depth, over the full single travel lane width, for each production day. If this option is utilized the Contractor will be required to place a matching course of HMA over the adjacent section of travel lane before the end of the following calendar day. The Contractor will also be responsible for installing additional warning signage that clearly defines the centerline elevation differential hazard, as well as additional centerline delineation such as double RPM application, or temporary painted line. The Traffic Control Plan shall be amended to include this option and the additional requirements. All signs and traffic control devices will conform to Section 719.01, and Section 652, and will be installed prior to the work, at a maximum spacing of 0.50 mile [0.80 km] for the entire length of the effected roadway section. On roadways with two-way traffic, the Contractor will be required to place the specified course over the full width of the mainline traveled way being paved prior to opening the sections to weekend or holiday traffic. If this option is utilized, all

additional signing, labor, traffic control devices, or incidentals will not be paid for directly, but will be considered incidental to the appropriate 652 items.

22. See Special Provision 401 – ¾ inch (20mm) Surface Treatment for project specifics.

Tack Coat

A tack coat of emulsified asphalt, RS-1 or HFMS-1, Item 409.15 shall be applied to any existing pavement at a rate of approximately 0.025 gal/yd², and on milled pavement approximately 0.05 gal/yd², prior to placing a new course. A fog coat of emulsified asphalt shall be applied between shim / intermediate course and the surface course, at a rate not to exceed 0.025 gal/yd².

Tack used between layers of pavement will be paid for at the contract unit price for Item 409.15 Bituminous Tack Coat.

SPECIAL PROVISION
SECTION 424
CRACK REPAIR

Description. This work shall consist of removing bituminous concrete pavement, cleaning, tacking, furnishing and compacting HMA in accordance with the typical section and contract specifications.

MATERIALS

Tack. The bituminous material shall meet the applicable requirements of Section 702 Bituminous Materials

HMA. The Hot Mix Asphalt Pavement shall be Type 12.5 meeting the requirements of Supplemental Specification Section 401 Hot Mix Asphalt Pavement.

CONSTRUCTION REQUIREMENTS

HMA. Placement of HMA shall be in conformance with the requirements of Supplemental Specification Section 401 Hot Mix Asphalt Pavement.

Compaction. The HMA shall be compacted by a method approved by the Resident.

Method of Measurement. Crack Repair will be measured by the foot. Measurement for payment will be made parallel to the centerline of the roadway.

Basis of Payment. The accepted quantity of Crack Repair will be paid for at the contract unit price per foot. This price will be full compensation for removing the material to the required depth and width, for cleaning, furnishing and applying tack and furnishing, placing and compacting HMA.

Payment will be made under:

Pay Item	Pay Unit
424.37 Crack Repair	Foot

WRC

ITEM 424.37 CRACK REPAIR

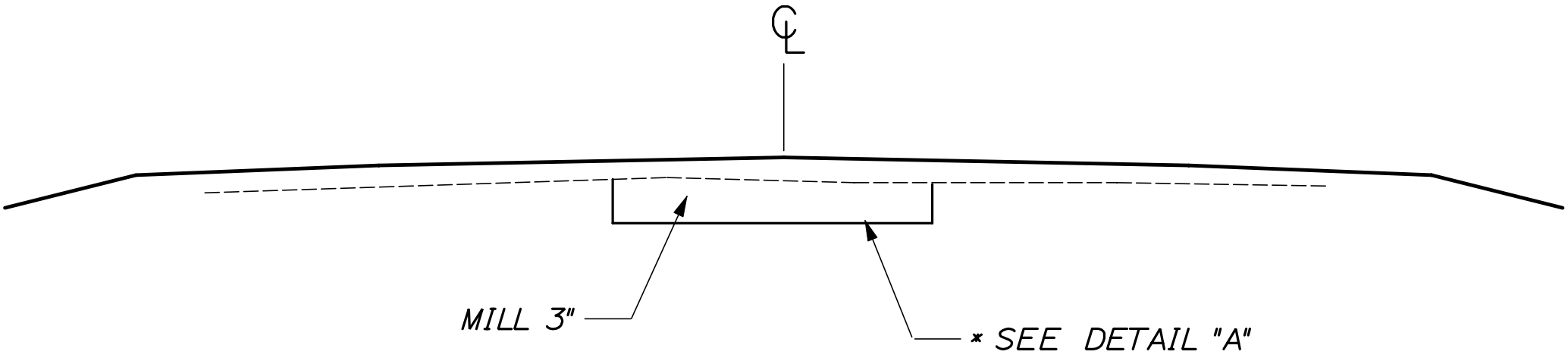

DETAIL "A"

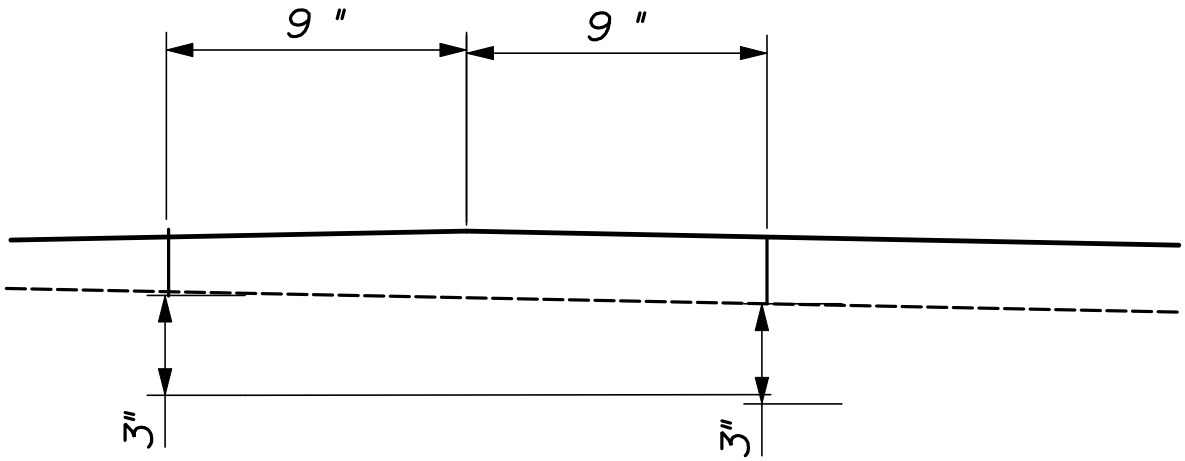

** REMOVE EXISTING PAVEMENT AND REPAVE WITH 12.5 mm COURSE.

SPECIAL PROVISION
SECTION 652
MAINTENANCE OF TRAFFIC
(Traffic Control)

652.7 Method of Measurement. This entire Subsection is revised to read:
Traffic Control Supervisor, furnishing, installation, and maintenance of all traffic control devices will be measured as one **lump sum** for all work authorized and performed.

652.8 Basis of Payment. This entire Subsection is revised to read:
Traffic Control will be paid for at the contract **lump sum** price. Payment will be full compensation for the Traffic Control Supervisor, approach signs, work area signs, drums, cones, panel markers, barricades, arrow boards etc. and maintenance thereof including the setting up and taking down of lane closures as many times as necessary shall be considered part of the lump sum price.

Maintenance of signs includes: replacing devices damaged, lost, or stolen, and cleaning and moving as many times as necessary throughout the life of the contract, regardless whether the work areas or projects are geographically separated or not separated.

The Lump Sum will be payable in installments as follows: 5% of the Lump Sum once the approach signing is complete and approved, with the 95% balance to be paid as the work progresses at a rate proportional to the percentage completion of the Contract.

Failure by the contractor to follow the Contracts 652 Special Provisions and/or The Manual on Uniform Traffic Control Devices (MUTCD) and/or The Contractors own Traffic Control Plan will result in a reduction in payment, computed by reducing The Lump Sum Total by 5% per occurrence. The Departments Resident Engineer or any other representative of The Department reserves the right to suspend the work at any time and request a meeting to discuss violations and remedies. The Department shall not be held responsible for any delay in the work due to any suspension under this item.

All other requirements under the Standard Specifications Section 652 will be a part of the lump sum item.

There will be no extra payment for this pay item after the expiration of contract time.

Payment will be made under:

Pay Item	Pay Unit
652.39 Work Zone Traffic Control	Lump Sum

February 27, 2003
Supersedes December 10, 2002

SPECIAL PROVISION
SECTION 652
MAINTENANCE OF TRAFFIC

Approaches Approach signing shall include the following signs as a minimum. Field conditions may warrant the use of additional signs as determined by the Resident.

Road Work Next x Miles
Road Work 500 Feet
End Road Work

Work Area At each work site, signs and channelizing devices shall be used as directed by the Resident. Signs include:

Road Work xxxx[1]
One Lane Road Ahead
Flagger Sign

Other typical signs include:

Be Prepared to Stop
Low Shoulder
Bump
Pavement Ends

The above lists of Approach signs and Work Area signs are representative of the contract requirements. Other sign legends may be required.

The Contractor shall conduct their operations in such a manner that the roadway will not be restricted to one lane for more than 800 m [2,500 ft] at each work area. Where more than one work area restricts traffic to one lane operation, these work areas shall be separated by at least 1.6 km [1 mile] of two way operation.

Temporary Centerline A temporary centerline shall be placed each day on all new pavement to be used by traffic. The temporary centerline, when specified of reflectorized traffic paint, shall conform to the standard marking patterns used for permanent markings.

Failure to apply a temporary centerline daily will result in suspension of paving until temporary markers are applied to all previously placed pavement.

[1] "Road Work Ahead" to be used in mobile operations and "Road Work xx ft" to be used in stationary operations as directed by the Resident.

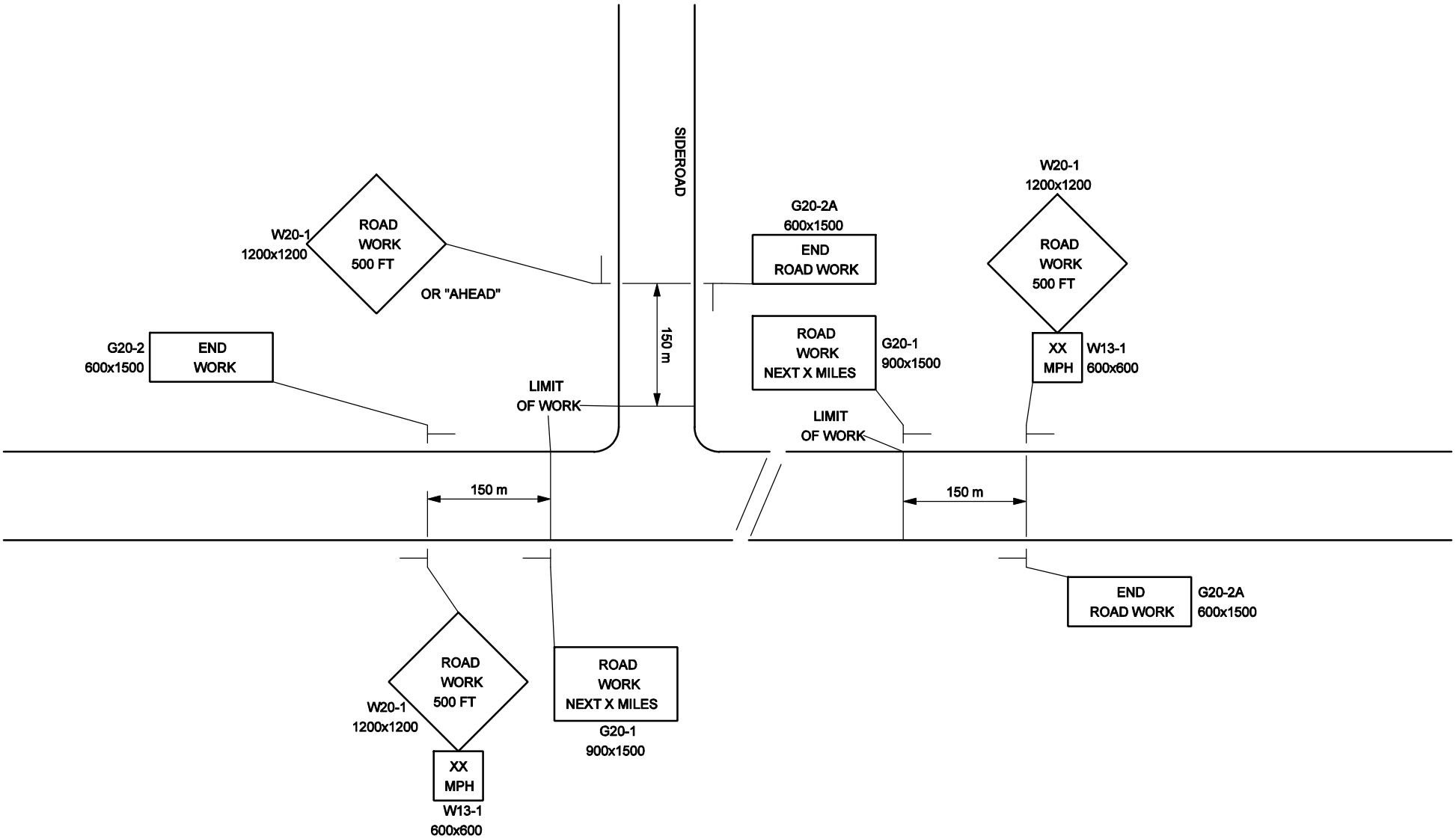

TYPICAL
-- PROJECT APPROACH SIGNING --
TWO WAY TRAFFIC

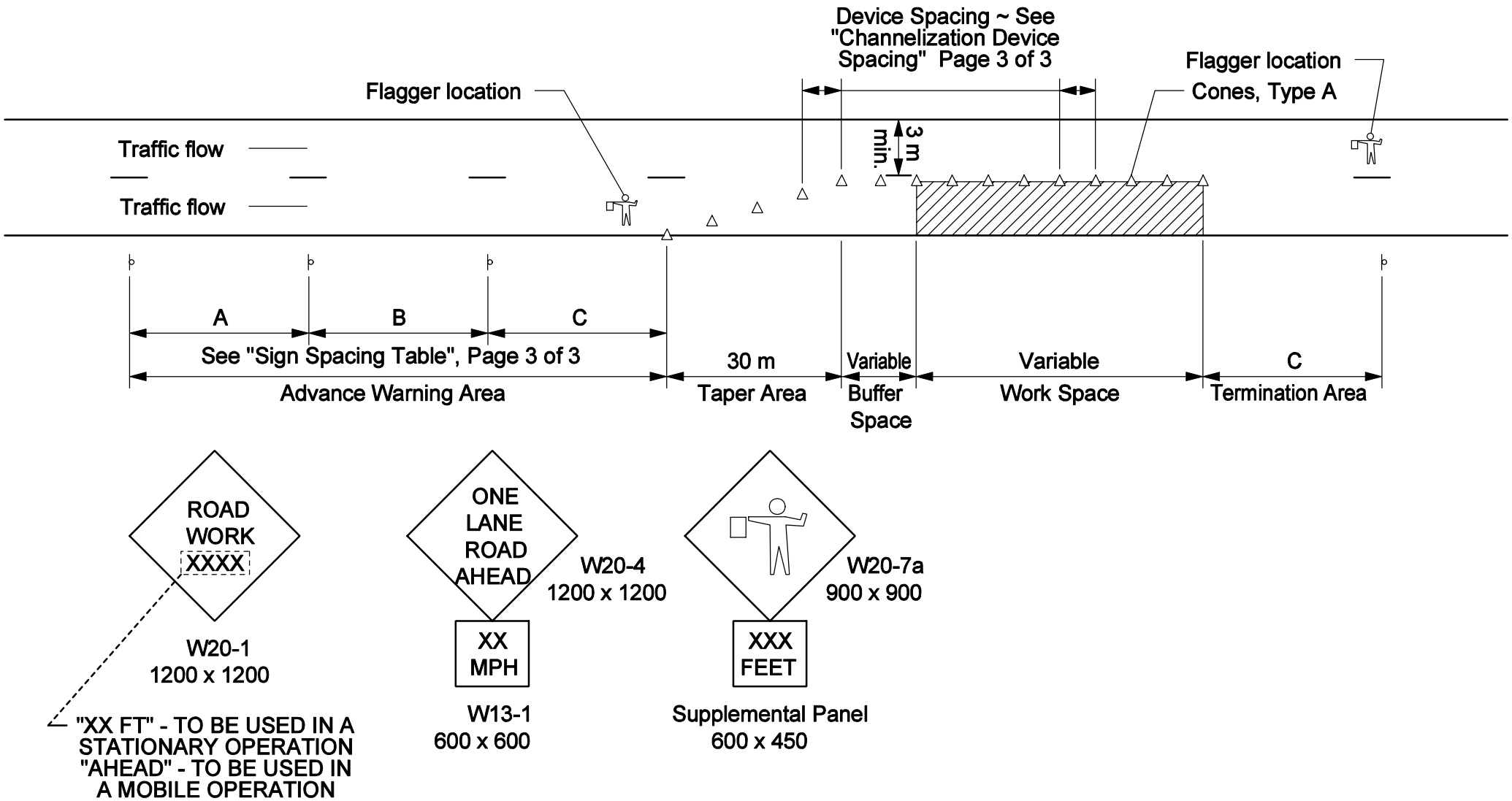

TYPICAL APPLICATION: TWO - WAY, TWO LANE ROADWAY, CLOSING ONE LANE USING FLAGGERS

TYPE OF TAPER	TAPER LENGTH (L)*
Merging Taper	at least L
Shifting Taper	at least 0.5L
Shoulder Taper	at least 0.33L
One-Lane, Two-Way Traffic Taper	100 ft (30 m) maximum
Downstream Taper	100 ft (30 m) per lane

* Formulas for L are as follows:

For speed limits of 40 mph (60 km/h) or less:

$L = \frac{WS^2}{60}$ $\quad (L = \frac{WS^2}{155})$

For speed limits of 45 mph (70 km/h) or greater:

$L = WS$ $\quad (L = \frac{WS}{1.6})$

* Formulas for L are as follows:

A minimum of 5 channelization devices shall be used in the taper.

CHANNELIZATION DEVICE SPACING

The spacing of channelization devices shall not exceed a distance equal to 1.0 times the speed limit in mph when used for taper channelization, and a distance in feet of 2.0 times the speed limit in mph when used for tangent channelization.

SIGN SPACING TABLE			
Road Type	Distance Between Signs**		
	A	B	C
Urban 30 mph (50 km/h) or less	100 (30)	100 (30)	100 (30)
Urban 35 mph (55 km/h) and greater	350 (100)	350 (100)	350 (100)
Rural	500 (150)	500 (150)	500 (150)
Expressway / Urban Parkway	2,640 (800)	1,500 (450)	1000 (300)

**Distances are shown in feet (meters).

GENERAL NOTES;

1. Final placement of signs and devices may be changed to fit field conditions as approved by the Resident.

SUGGESTED BUFFER ZONE LENGTHS

Speed (mph)	Length (feet)	Speed (mph)	Length (feet)
20	115	40	325
25	155	45	360
30	200	50	425
35	250	55	495

SPECIAL PROVISION
SECTION 656
Temporary Soil Erosion and Water Pollution Control

The following is added to Section 656 regarding Project Specific Information and Requirements. All references to the Maine Department of Transportation Best Management Practices for Erosion and Sediment Control (a.k.a. Best Management Practices manual or BMP Manual) are a reference to the latest revision of said manual. The "Table of Contents" of the latest version is dated "1/19/00" (available at http://www.state.me.us/mdot/mainhtml/bmp/bmpjan2000.pdf.) **Procedures specified shall be according to the BMP Manual unless stated otherwise.**

Any and all references to "bark mulch" or "composted bark mix" shall be a reference to " Erosion Control Mix" in accordance with *Standard Specification, Section 619 - Mulch.*

Project Specific Information and Requirements

The following information and requirements apply specifically to this Project. The temporary soil erosion and water pollution control measures associated with this work shall be addressed in the SEWPCP.

1) This project is in the Meduxnekeag River watershed, which is listed as a Priority Waterbody and is considered **SENSITIVE** in accordance with the BMP Manual. The Contractor's SEWPCP shall comply with Section II.B., Guidelines for Sensitive Waterbodies in the BMP Manual.

2) Newly disturbed earth shall be mulched by the end of each workday. Mulch shall be maintained on a daily basis.

3) The SEWPCP shall describe the location and method of temporary erosion and sediment control for existing and proposed catch basins, outlet areas and culvert inlets and outlets.

4) **If water is flowing within the drainage system, the water shall be diverted to a stable area or conduit and work shall be conducted in the dry.** The Contractor's plan shall address when and where the diversions will be necessary.

5) Dust control items other than those under *Standard Specification, Section 637 – Dust Control* , if applicable, shall be included in the plan.

6) Permanent slope stabilization measures shall be applied within one week of the last soil disturbance.

SPECIAL PROVISION
SECTION 656
Temporary Soil Erosion and Water Pollution Control

7) Permanent seeding shall be done in accordance with *Standard Specification, Section 618 - Seeding* unless the Contract states otherwise.

8) Culvert inlet and outlet protection shall be installed within 48 hours of culvert installation, or prior to a storm event, whichever is sooner.

9) After November 1 the Contractor shall use winter stabilization methods, such as Erosion Control Mix as specified in *Standard Specification, Section 619 - Mulch*. If required, spring procedures for permanent stabilization shall also be described in the plan. Use of this product for over-winter temporary erosion control will be incidental to the contract and be paid for as part of Pay Item 656.75.

10) **DRAINAGE WORK SHALL NOT COMMENCE UNTIL AFTER APRIL 1ST OF ANY YEAR DUE TO HIGH GROUNDWATER LEVELS AND NUMEROUS INTERMITTENT STREAMS.** This date shall only be adjustable upon approval of both the Resident and a representative from the Water Resources Unit.

11) All disturbed ditches shall be stabilized by the end of each workday. Stabilization shall be maintained on a daily basis.

12) Erosion control blanket shall be installed in the bottoms of all ditches except where a stone lining is planned. Seed shall be applied prior to the placement of the blanket.

13) If check dams are used, they shall be constructed of stone in accordance with BMP Manual, Section 9.

SPECIAL PROVISION
SECTION 656
Temporary Soil Erosion and Water Pollution Control

Standard Specification 656 of the Standard Specifications is deleted and replaced by this Special Provision.

The following information and requirements will constitute the Soil Erosion and Water Pollution Control Plan for this Project. The soil erosion and water pollution control measures associated with this work are as follows:

1. All work shall be done in accordance with the latest revision of the Maine Department of Transportation Best Management Practices for Erosion and Sediment Control (a.k.a. Best Management Practices manual or BMP Manual). The "Table of Contents" of the latest version is dated "1/19/00" (available at http://www.state.me.us/mdot/mainhtml/bmp/bmpjan2000.pdf.) **Procedures specified shall be according to the BMP Manual unless stated otherwise.**
2. The on-site person responsible for implementation of this plan, shall be the Contractor's Superintendent or other supervisory employee (the "Environmental Coordinator") with the authority to immediately remedy any deficient controls and shall provide the Resident with their numbers (telephone number, cellular phone and pager numbers, if applicable) where the Environmental Coordinator can be reached 24 hours a day.
3. All areas where soil is disturbed shall be permanently mulched on a daily basis and seeded on a weekly basis (if seeded by hand, it shall be done on a daily basis). All previously mulched areas shall be maintained and re-mulched on a daily basis if bare areas develop until an acceptable growth of grass has been obtained.
4. All disturbed ditches shall receive erosion control blanket or stone rip rap prior to leaving the site each day.
5. If the Work includes the handling or storage of petroleum products or Hazardous Materials including the on site fueling of Equipment, the Resident must be provided with a Spill Prevention Control and Countermeasure Plan (SPCCP) plan. At a minimum, the SPCCP shall include:
   - The name and emergency response numbers (telephone number, cellular phone and pager numbers, if applicable) of the Contractor's representative responsible for spill prevention;
   - General description and location of (1) handling, transfer, storage, and containment facilities of such products or Materials ("activities and facilities") and (2) potential receptors of such products or Materials including oceans, lakes, ponds, rivers, streams, wetlands, and sand and gravel aquifers ("sensitive resources") including the distances between said activities and facilities and said sensitive resources;

SPECIAL PROVISION
SECTION 656
Temporary Soil Erosion and Water Pollution Control

- Description of preventative measures to be used to minimize the possibility of a spill including Equipment and/or Materials to be used to prevent discharges including absorbent Materials,
- A contingency response plan to be implemented if a spill should occur including a list of emergency phone/pager numbers including the Contractor's representative, MDEP Spill Response, the Resident, and local police and fire authorities. For a related provision, see *Standard Specification, Section, 105.2.2 - Project Specific Emergency Planning*.

6. The Environmental Coordinator must inspect and maintain daily all controls for the duration of the project.
7. Any costs related to this plan shall be considered incidental to the contract.
8. If the Project Resident directs soil disturbance that require temporary erosion and sedimentation control, all permits shall be obtained by the DOT and a full SEWPCP will be required and paid for as Extra Work.

Permits & Cultural Resources Unit

PIN #: 11116.00
Location: Houlton
Permit Member: Laurie Rowe Photographs ☐ Database/Projex ☒ Package to ENV Coordinator: 2/9/04

☒ **Section 106 and Tribal Consultation**

Architectural Resources	MOA ☐	Applicable☒	Approved ☒
Archeological Resources	MOA ☐	Applicable☒	Approved ☒
Tribal Consultation	N/A ☒	Applicable☐	Approved ☐

☒ **4(f) and 6(f)**

Section 4(f)	N/A ☒	Applicable☐	Approved ☐
LAWCON 6(f)	N/A ☒	Applicable☐	Approved ☐

☒ **FEMA** N/A ☒ Applicable☐ Approved ☐

☒ **Maine Department of Environmental Protection (MDEP) Site Location of Development**
N/A ☒ Applicable ☐ Approved ☐

☒ **Local Zoning, Title 30-A, Section 4325-6**.
Is the project something other than the highway and bridge system, such as a maintenance lot, building/parking facility? Yes ☐ No ☒. If no, the project is exempt.
If yes, continue. Does the town in which the project is located have a comprehensive plan consistent with the Growth Management Program? Yes ☐ No ☐. If no, the project is exempt.
If yes, local zoning ordinances and/or permits are needed. Approved ☐

☒ **Maine Department of Inland Fisheries and Wildlife (MDIFW) Essential Habitat**

Eagle Nest	N/A ☒	Applicable ☐	Approved ☐
Piping Plover	N/A ☒	Applicable ☐	Approved ☐
Roseate Tern	N/A ☒	Applicable☐	Approved ☐

☒ **United States Fish and Wildlife Service (USFWS), Migratory Bird Act**
N/A ☒ Applicable ☐

☒ **Maine Department of Conservation/ Public Lands, Submerged Land Lease**
N/A ☒ Applicable ☐

☒ **Land Use Regulation Commission (LURC)** ☒ Not Applicable

No permit	☐	
Notice	☐	Approved ☐
Permit	☐	Approved ☐

☒ **Maine Department of Environmental Protection (MDEP), Natural Resource Protection Act**

No permit required	☐	
Exempt	☐	(Must use erosion and sediment control and not block fish passage.)
PBR	☒	Approved ☒
Tier 1	☐	Approved ☐
Tier 2	☐	Approved ☐
Tier 3	☐	Approved ☐

☒ **Army Corps of Engineers (ACOE), Section 10 of the Rivers and Harbors Act and Section 404 of the Clean Water Act.**

No permit required ☐	
Category 1-NR☒	Approved ☒
Category 2☐	Approved ☐
Category 3☐	Approved ☐

☒ **IN-WATER TIMING RESTRICTIONS:** 105 Special Provision ☐ n/a ☒
Dates instream work is allowed: There is No instream work on this project

☒ Special Provision 656, Erosion Control Plan
Boxes marked in red indicate items that are attached and need to be placed in the contract by the Project Manager.

DEPARTMENT OF ENVIRONMENTAL PROTECTION (DEP)

PERMIT BY RULE NOTIFICATION FORM

(For use with DEP Regulation, Chapter 305)

■ **MDOT PIN: 11116.00**

Name of Applicant: **State of Maine Department of Transportation** **Name of Contact:** **David Gardner**
Mailing Address: **16 Station State House** **Town/City:** **Augusta** **State:** **Me.** **Zip Code:** **04330-0016**
Daytime Telephone #: **(207)-624-3105** **Name of Wetland, Water Body or Stream:** **Unnamed Stream**

Detailed Directions to Site: Project is located at the intersection of Ludlow Road and Callaghan Road.

Town/City: **Houlton** **Map #:** N/A **Lot #:** N/A **County:** **Aroostook**

Description of Project: Project scope is an Intersection and approach improvement project. The project will be performed in accordance with erosion control measures conforming with the latest versions of the *State of Maine Department of Transportation Standard Specifications for Highways and Bridges* and the *Department of Transportation's Best Management Practices for Erosion and Sediment Control.*

Part of a larger project? ☐**Yes** ☒**No**

(**CHECK ONE**) This project... ☒ does ☐ does not ...involve work below mean low water.

I am filing notice of my intent to carry out work which meets the requirements for Permit By Rule (PBR) under DEP Regulation, Chapter 305. I have a copy of PBR Sections checked below. I have read and will comply with all of the standards.

☐Sec. (2) Soil Disturbance	☐Sec. (8) Shoreline stabilization	☐Sec. (14) Piers, Wharves & Pilings
☐Sec. (3) Intake Pipes	☐Sec. (9) Utility Crossing	☐Sec. (15) Public Boat Ramps
☐Sec. (4) Replacement of Structures	☐Sec. (10) Stream Crossing	☐Sec. (16) Coastal Sand Dune Projects
☐Sec. (5) REPEALED	☒Sec. (11) State Transport. Facilities	☐Sec. (17) Transfers/Permit Extension
☐Sec. (6) Movement of Rocks or Vegetation	☐Sec. (12) Restoration of Natural Areas	☐Sec. (18) Maintenance Dredging
☐Sec. (7) Outfall Pipes	☐Sec. (13) F&W Creation/Enhance/Water Quality Improvement	

I authorize staff of the Departments of Environmental Protection, Inland Fisheries & Wildlife, and Marine Resources to access the project site for the purpose of determining compliance with the rules. I also understand that ***this permit is not valid until approved by the Department or 14 days after receipt by the Department, whichever is less.***

I have attached all of the following required submittals. **NOTIFICATION FORMS CANNOT BE ACCEPTED WITHOUT THE NECESSARY ATTACHMENTS:**

- ■ **A $50 (non-refundable) payment shall be done by internal billing.**
- ■ ***Attach*** **a U.S.G.S. topo map or Maine Atlas & Gazetteer map with the project site clearly marked.**
- ☐ ***Attach*** **photographs showing existing site conditions (unless not required under standards).**

Signature of Applicant: John E. Dority, Chief Engineer **Date:** 10/08/03

Keep the bottom copy as a record of permit. Send the form with attachments via certified mail to the Maine Dept. of Environmental Protection **at the appropriate regional office listed below**. The DEP will send a copy to the Town Office as evidence of the DEP's receipt of notification. No further authorization by DEP will be issued after receipt of notice. Permits are valid for two years. **Work carried out in violation of any standard is subject to enforcement action.**

AUGUSTA DEP STATE HOUSE STATION 17 AUGUSTA, ME 04333-0017 (207)287-2111 PORTLAND DEP 312 CANCO ROAD PORTLAND, ME 04103 (207)822-6300 BANGOR DEP 106 HOGAN ROAD BANGOR, ME 04401 (207)941-4570 PRESQUE ISLE DEP 1235 CENTRAL DRIVE PRESQUE ISLE, ME 04769 (207)764-0477

OFFICE USE ONLY	Ck.#	Staff	Staff	
PBR # FP	Date	Acc. Date	Def. Date	After Photos

Permits & Cultural Resources Unit

PIN #: 11387.00
Location: Houlton
Permit Member: Laurie Rowe Photographs ☐ Database/Projex ☒ Package to ENV Coordinator: 2/9/04

☒ **Section 106 and Tribal Consultation**

Architectural Resources	MOA ☐	Applicable☒	Approved ☒
Archeological Resources	MOA ☐	Applicable☒	Approved ☒
Tribal Consultation	N/A ☒	Applicable☐	Approved ☐

☒ **4(f) and 6(f)**

Section 4(f)	N/A ☒	Applicable☐	Approved ☐
LAWCON 6(f)	N/A ☒	Applicable☐	Approved ☐

☒ **FEMA** N/A ☒ Applicable☐ Approved ☐

☒ **Maine Department of Environmental Protection (MDEP) Site Location of Development**
N/A ☒ Applicable ☐ Approved ☐

☒ **Local Zoning, Title 30-A, Section 4325-6**.
Is the project something other than the highway and bridge system, such as a maintenance lot, building/parking facility? Yes ☐ No ☒. If no, the project is exempt.
If yes, continue. Does the town in which the project is located have a comprehensive plan consistent with the Growth Management Program? Yes ☐ No ☐. If no, the project is exempt.
If yes, local zoning ordinances and/or permits are needed. Approved ☐

☒ **Maine Department of Inland Fisheries and Wildlife (MDIFW) Essential Habitat**

Eagle Nest	N/A ☒	Applicable ☐	Approved ☐
Piping Plover	N/A ☒	Applicable ☐	Approved ☐
Roseate Tern	N/A ☒	Applicable☐	Approved ☐

☒ **United States Fish and Wildlife Service (USFWS), Migratory Bird Act**
N/A ☒ Applicable ☐

☒ **Maine Department of Conservation/ Public Lands, Submerged Land Lease**
N/A ☒ Applicable ☐

☒ **Land Use Regulation Commission (LURC)** ☒ Not Applicable

No permit	☐	
Notice	☐	Approved ☐
Permit	☐	Approved ☐

☒ **Maine Department of Environmental Protection (MDEP), Natural Resource Protection Act**

No permit required	☐	
Exempt	☐	(Must use erosion and sediment control and not block fish passage.)
PBR	☒	Approved ☒
Tier 1	☐	Approved ☐
Tier 2	☐	Approved ☐
Tier 3	☐	Approved ☐

☒ **Army Corps of Engineers (ACOE), Section 10 of the Rivers and Harbors Act and Section 404 of the Clean Water Act.**

No permit required ☐	
Category 1-NR☒	Approved ☒
Category 2☐	Approved ☐
Category 3☐	Approved ☐

☒ **IN-WATER TIMING RESTRICTIONS:** 105 Special Provision ☐ n/a☒
Dates instream work is allowed: There is No instream work on this project

☒ Special Provision 656, Erosion Control Plan
Boxes marked in red indicate items that are attached and need to be placed in the contract by the Project Manager.

DEPARTMENT OF ENVIRONMENTAL PROTECTION (DEP)

PERMIT BY RULE NOTIFICATION FORM

(For use with DEP Regulation, Chapter 305)

■ **MDOT PIN: 11387.00**

Name of Applicant: State of Maine Department of Transportation **Name of Contact:** David Gardner
Mailing Address: 16 Station State House **Town/City:** Augusta **State:** Me. **Zip Code:** 04330-0016
Daytime Telephone #: (207)-624-3105 **Name of Wetland, Water Body or Stream:** Unnamed Stream

Detailed Directions to Site: Project is on Rte 1 and begins 0.13 of a mile southerly of the I-95 northbound off ramp and extends northerly 0.88 of a mile.

Town/City: Houlton **Map #:** N/A **Lot #:** N/A **County:** Aroostook

Description of Project: Highway overlay involving culvert, guardrail, slopw and ditch maintenance and repairs. The project will be performed in accordance with erosion control measures conforming with the latest versions of the *State of Maine Department of Transportation Standard Specifications for Highways and Bridges* and the *Department of Transportation's Best Management Practices for Erosion and Sediment Control.*

Part of a larger project? ☐Yes ☒No

(**CHECK ONE**) This project... ☒ does ☐ does not ...involve work below mean low water.

I am filing notice of my intent to carry out work which meets the requirements for Permit By Rule (PBR) under DEP Regulation, Chapter 305. I have a copy of PBR Sections checked below. I have read and will comply with all of the standards.

☐Sec. (2) Soil Disturbance	☐Sec. (8) Shoreline stabilization	☐Sec. (14) Piers, Wharves & Pilings
☐Sec. (3) Intake Pipes	☐Sec. (9) Utility Crossing	☐Sec. (15) Public Boat Ramps
☐Sec. (4) Replacement of Structures	☐Sec. (10) Stream Crossing	☐Sec. (16) Coastal Sand Dune Projects
☐Sec. (5) REPEALED	☒Sec. (11) State Transport. Facilities	☐Sec. (17) Transfers/Permit Extension
☐Sec. (6) Movement of Rocks or Vegetation	☐Sec. (12) Restoration of Natural Areas	☐Sec. (18) Maintenance Dredging
☐Sec. (7) Outfall Pipes	☐Sec. (13) F&W Creation/Enhance/Water Quality Improvement	

I authorize staff of the Departments of Environmental Protection, Inland Fisheries & Wildlife, and Marine Resources to access the project site for the purpose of determining compliance with the rules. I also understand that ***this permit is not valid until approved by the Department or 14 days after receipt by the Department, whichever is less.***

I have attached all of the following required submittals. **NOTIFICATION FORMS CANNOT BE ACCEPTED WITHOUT THE NECESSARY ATTACHMENTS:**

- ■ **A $50 (non-refundable) payment shall be done by internal billing.**
- ■ ***Attach* a U.S.G.S. topo map or Maine Atlas & Gazetteer map with the project site clearly marked.**
- ☐ ***Attach* photographs showing existing site conditions (unless not required under standards).**

Signature of Applicant: John E. Dority
John E. Dority, Chief Engineer **Date:** 10/08/03

Keep the bottom copy as a record of permit. Send the form with attachments via certified mail to the Maine Dept. of Environmental Protection **at the appropriate regional office listed below**. The DEP will send a copy to the Town Office as evidence of the DEP's receipt of notification. No further authorization by DEP will be issued after receipt of notice. Permits are valid for two years. **Work carried out in violation of any standard is subject to enforcement action.**

AUGUSTA DEP STATE HOUSE STATION 17 AUGUSTA, ME 04333-0017 (207)287-2111 PORTLAND DEP 312 CANCO ROAD PORTLAND, ME 04103 (207)822-6300 BANGOR DEP 106 HOGAN ROAD BANGOR, ME 04401 (207)941-4570 PRESQUE ISLE DEP 1235 CENTRAL DRIVE PRESQUE ISLE, ME 04769 (207)764-0477

OFFICE USE ONLY Ck.# Staff Staff
PBR # FP Date Acc. Date Def. Date After Photos

Permits & Cultural Resources Unit

PIN #: 11389.00
Location: Houlton
Permit Member: Laurie Rowe Photographs ☐ Database/Projex ☒ Package to ENV Coordinator: 2/9/04

☒ **Section 106 and Tribal Consultation**

Architectural Resources	MOA ☐	Applicable☒	Approved ☒
Archeological Resources	MOA ☐	Applicable☒	Approved ☒
Tribal Consultation	N/A ☒	Applicable☐	Approved ☐

☒ **4(f) and 6(f)**

Section 4(f)	N/A ☒	Applicable☐	Approved ☐
LAWCON 6(f)	N/A ☒	Applicable☐	Approved ☐

☒ **FEMA** N/A ☒ Applicable☐ Approved ☐

☒ **Maine Department of Environmental Protection (MDEP) Site Location of Development**
N/A ☒ Applicable ☐ Approved ☐

☒ **Local Zoning, Title 30-A, Section 4325-6**.
Is the project something other than the highway and bridge system, such as a maintenance lot, building/parking facility? Yes ☐ No ☒. If no, the project is exempt.
If yes, continue. Does the town in which the project is located have a comprehensive plan consistent with the Growth Management Program? Yes ☐ No ☐. If no, the project is exempt.
If yes, local zoning ordinances and/or permits are needed. Approved ☐

☒ **Maine Department of Inland Fisheries and Wildlife (MDIFW) Essential Habitat**

Eagle Nest	N/A ☒	Applicable ☐	Approved ☐
Piping Plover	N/A ☒	Applicable ☐	Approved ☐
Roseate Tern	N/A ☒	Applicable☐	Approved ☐

☒ **United States Fish and Wildlife Service (USFWS), Migratory Bird Act**
N/A ☒ Applicable ☐

☒ **Maine Department of Conservation/ Public Lands, Submerged Land Lease**
N/A ☒ Applicable ☐

☒ **Land Use Regulation Commission (LURC)** ☒ Not Applicable

No permit	☐	
Notice	☐	Approved ☐
Permit	☐	Approved ☐

☒ **Maine Department of Environmental Protection (MDEP), Natural Resource Protection Act**

No permit required	☐	
Exempt	☐	(Must use erosion and sediment control and not block fish passage.)
PBR	☒	Approved ☒
Tier 1	☐	Approved ☐
Tier 2	☐	Approved ☐
Tier 3	☐	Approved ☐

☒ **Army Corps of Engineers (ACOE), Section 10 of the Rivers and Harbors Act and Section 404 of the Clean Water Act.**

No permit required ☐	
Category 1-NR☒	Approved ☒
Category 2☐	Approved ☐
Category 3☐	Approved ☐

☒ **IN-WATER TIMING RESTRICTIONS:** 105 Special Provision ☐ n/a☒
Dates instream work is allowed: There is no instream work on this project

☒ Special Provision 656, Erosion Control Plan
Boxes marked in red indicate items that are attached and need to be placed in the contract by the Project Manager.

DEPARTMENT OF ENVIRONMENTAL PROTEIN (DEP)

PERMIT BY RULE NOTIFICATION FORM

(For use with DEP Regulation, Chapter 305)

■ **MDOT PIN: 11389.00**

Name of Applicant: State of Maine Department of Transportation **Name of Contact:** David Gardner
Mailing Address: 16 Station State House **Town/City:** Augusta **State:** Me. **Zip Code:** 04330-0016
Daytime Telephone #: (207)-624-3105 **Name of Wetland, Water Body or Stream:** Unnamed trib to the Meduxnekeag River

Detailed Directions to Site: Project is on Rte 1 and begins 0.73 of a mile northerly of the I-95 off ramp and extending northerly 1.02 miles.

Town/City: Houlton **Map #:** N/A **Lot #:** N/A **County:** Aroostook

Description of Project: Highway overlay involving culvert, guardrail, slopw and ditch maintenance and repairs. The project will be performed in accordance with erosion control measures conforming with the latest versions of the *State of Maine Department of Transportation Standard Specifications for Highways and Bridges* and the *Department of Transportation's Best Management Practices for Erosion and Sediment Control.*

Part of a larger project? ☐Yes ☒No

(**CHECK ONE**) This project... ☒ does ☐ does not ...involve work below mean low water.

I am filing notice of my intent to carry out work which meets the requirements for Permit By Rule (PBR) under DEP Regulation, Chapter 305. I have a copy of PBR Sections checked below. I have read and will comply with all of the standards.

☐Sec. (2) Soil Disturbance	☐Sec. (8) Shoreline stabilization	☐Sec. (14) Piers, Wharves & Pilings
☐Sec. (3) Intake Pipes	☐Sec. (9) Utility Crossing	☐Sec. (15) Public Boat Ramps
☐Sec. (4) Replacement of Structures	☐Sec. (10) Stream Crossing	☐Sec. (16) Coastal Sand Dune Projects
☐Sec. (5) REPEALED	☒Sec. (11) State Transport. Facilities	☐Sec. (17) Transfers/Permit Extension
☐Sec. (6) Movement of Rocks or Vegetation	☐Sec. (12) Restoration of Natural Areas	☐Sec. (18) Maintenance Dredging
☐Sec. (7) Outfall Pipes	☐Sec. (13) F&W Creation/Enhance/Water Quality Improvement	

I authorize staff of the Departments of Environmental Protection, Inland Fisheries & Wildlife, and Marine Resources to access the project site for the purpose of determining compliance with the rules. I also understand that ***this permit is not valid until approved by the Department or 14 days after receipt by the Department, whichever is less.***

I have attached all of the following required submittals. **NOTIFICATION FORMS CANNOT BE ACCEPTED WITHOUT THE NECESSARY ATTACHMENTS:**

- ■ **A $50 (non-refundable) payment shall be done by internal billing.**
- ■ ***Attach* a U.S.G.S. topo map or Maine Atlas & Gazetteer map with the project site clearly marked.**
- ☐ ***Attach* photographs showing existing site conditions (unless not required under standards).**

Signature of Applicant: John E. Dority, Chief Engineer **Date:** 10/08/03

Keep the bottom copy as a record of permit. Send the form with attachments via certified mail to the Maine Dept. of Environmental Protection **at the appropriate regional office listed below**. The DEP will send a copy to the Town Office as evidence of the DEP's receipt of notification. No further authorization by DEP will be issued after receipt of notice. Permits are valid for two years. **Work carried out in violation of any standard is subject to enforcement action.**

AUGUSTA DEP STATE HOUSE STATION 17 AUGUSTA, ME 04333-0017 (207)287-2111 PORTLAND DEP 312 CANCO ROAD PORTLAND, ME 04103 (207)822-6300 BANGOR DEP 106 HOGAN ROAD BANGOR, ME 04401 (207)941-4570 PRESQUE ISLE DEP 1235 CENTRAL DRIVE PRESQUE ISLE, ME 04769 (207)764-0477

OFFICE USE ONLY	Ck.#	Staff	Staff
PBR # FP	Date	Acc. Date	Def. Date After Photos

Chapter 305: PERMIT BY RULE Section 11
State Transportation Facilities

1. Introduction. A "permit by rule" or "PBR", when approved by the Department of Environmental Protection (DEP), is an approval for an activity that requires a permit under the Natural Resources Protection Act (NRPA). Only those activities described in this chapter may proceed under the PBR process. A PBR activity will not significantly affect the environment if carried out in accordance with this chapter, and generally has less of an impact on the environment than an activity requiring an individual permit. A PBR satisfies the Natural Resources Protection Act (NRPA) permit requirement and Water Quality Certification requirement.

If a proposed activity is not described in this chapter, or will not be conducted in accordance with the standards of this chapter, the applicant must obtain an individual permit prior to beginning the activity.

A. Location of activity. The location of an activity may affect whether an activity qualifies for PBR, and whether review by the Department of Inland Fisheries and Wildlife is required.

(1) Type of resource. For some types of activities, the availability of a PBR is affected by the type of natural resource in or adjacent to which the activity is proposed. For example, an applicant proposing an activity consisting of "Movement of rocks or vegetation" may receive a PBR only if the activity will take place in a great pond, river, stream or brook. Limitations concerning the location of activities are addressed in the "Applicability" provision in each section of this chapter.

(2) Essential habitat. Essential habitats include areas critical to the survival of threatened and endangered species such as the bald eagle, least tern, roseate tern, and piping plover. If the activity is located in essential habitat, such as near an eagle nesting site, a PBR is only available if the applicant obtains written approval from the Department of Inland Fisheries and Wildlife (IF&W). This approval from IF&W must be submitted to the DEP with the PBR notification form, and the applicant must follow any conditions stated in the IF&W approval.

NOTE: Maps showing areas of essential habitat are available from the Department of Inland Fisheries and Wildlife regional headquarters, municipal offices, the Land Use Regulation Commission (for unorganized territories) and DEP regional offices. If the activity is located in essential habitat, IF&W must be contacted to request and obtain a "certification of review and approval".

B. Notification. The applicant must file notice of the activity with the DEP prior to beginning work on the activity. The notification must be on a form provided by the DEP and must include any submissions required in this chapter. The applicant must keep a copy to serve as the permit.

The notification form must be sent to the DEP by certified mail (return receipt requested), or hand delivered to the DEP and date stamped by the department.

C. Effective period

(1) Beginning of period. The PBR becomes effective 14 calendar days after the DEP receives the notification form, unless the DEP approves or denies the PBR prior to that date. If the DEP does not speak with or write to the applicant within this 14 day period regarding the PBR notification, the applicant may proceed to carry out the activity.

There are three exceptions regarding the effective date of an approved PBR:

(a) Activities listed in Section 10 (Stream crossings) occurring in association with forest management are exempt from the 14 day waiting period.

(b) Activities listed in Section 2 (Soil disturbance) and Section 10 (Stream crossings) performed or supervised by individuals currently certified in erosion control practices by the DEP are exempt from the 14 day waiting period. To be certified in erosion control practices, an individual must successfully complete all course requirements of the Voluntary Contractor Certification Program administered by the DEP's Nonpoint Source Training and Resource Center.

(c) Activities that are part of a larger project requiring a permit under the Site Location of Development or the Storm Water Management Acts may not proceed until any required permit under those laws is obtained.

NOTE: Activities that are part of a larger project may require other permits from the DEP also. These other laws may prohibit the start of construction of any part of the project unless a permit under that law is obtained. In these cases, while not a violation of this rule, starting work on a PBR approved activity would be a violation of those other applicable laws.

(2) End of period. The PBR is generally effective for 2 years from the date of approval, except that a PBR for "Replacement of structures" under Section 4 is effective for 3 years.

NOTE: Activities that qualify under this chapter may need to meet other local, state and federal requirements. Examples -- (1) If an activity extends below the low water line of a lake, coastal wetland or international boundary water, the applicant should contact the Bureau of Parks and Lands (287-3061) concerning possible lease or easement requirements, or (2) If an activity will involve work below the mean high water line in navigable waters of the United States, the applicant should contact the Army Corps of Engineers (623-8367).

D. Discretionary authority. Notwithstanding compliance with the PBR applicability requirements and standards set forth in this chapter, the DEP may require an individual permit application to be filed in any case where credible evidence indicates that the activity:

(1) May violate the standards of the NRPA (38 M.R.S.A. Section 480-D);

(2) Could lead to significant environmental impacts, including cumulative impacts; or

(3) Could adversely impact a resource of special concern.

If an individual permit is required pursuant to this subsection, the DEP shall notify the applicant in writing within the 14 calendar day waiting period described in sub-section (C) above. When the DEP notifies an applicant than an individual permit is required, no work may be conducted unless and until the individual permit is obtained.

E. Violations. A violation of law occurs when a person, or his or her agent, performs or causes to be performed any activity subject to the NRPA without first obtaining a permit from the DEP, or acts contrary to the provisions of a permit. The person, his or her agent, or both, may be held

responsible for the violation. Commonly, the "person" is the landowner, and the "agent" is the contractor carrying out the activity. A violation occurs when:

(1) An activity occurs that is not allowed under PBR, whether or not a PBR notification form has been filed with and/or approved by the DEP;

(2) An activity occurs that is allowed under PBR, but a PBR for the activity has not become effective prior to the beginning of the activity; or

(3) An activity occurs that is allowed under PBR and a PBR for the activity is in effect, but the standards specified in this chapter are not met.

See the "applicability" provision under each activity for rules concerning what activities are allowed under PBR. A PBR is only valid for the person listed on the notification form, or for his or her agent.

Each day that a violation occurs or continues is considered a separate offense. Violations are subject to criminal penalties and civil penalties of not less than $100 nor more than $10,000 for each day of that violation (38 M.R.S.A. Section 349).

NOTE: A local Code Enforcement Officer (CEO) may take enforcement action for a violation of the Natural Resources Protection Act if he or she is authorized to represent a municipality in District Court, and he or she has been certified as familiar with court procedures, 30-A M.R.S.A. Section 4452(7).

Chapter 305 Section 11

State transportation facilities

A. Applicability

(1) This section applies to the maintenance, repair, reconstruction, rehabilitation, replacement or minor construction of a State Transportation Facility carried out by, or under the authority of, the Maine Department of Transportation or the Maine Turnpike Authority, including any testing or preconstruction engineering, and associated technical support services.

(2) This section does not apply to an activity within a coastal sand dune system.

NOTE: The construction of a transportation facility other than roads and associated facilities may be subject to the Storm Water Management Law, 38 M.R.S.A. Section 420-D.

B. Standards

(1) Photographs of the area to be altered by the activity must be taken before work on the site begins. The photographs must be kept on file and be made available at the request of the DEP.

(2) The activity must be reviewed by the Department of Inland Fisheries and Wildlife, the Department of Marine Resources, the Atlantic Salmon Authority, and the DEP's Division of Environmental Assessment prior to the notification being filed with the DEP. The activity must be performed according to any recommendations from these authorities.

(3) The activity must be performed in accordance with erosion control measures conforming with the State of Maine Department of Transportation Standard Specifications for Highways and Bridges Revision of April 1995 and with the Department of Transportation's Best Management Practices for Erosion and Sediment Control, September 1997.

NOTE: Guidance on the use of erosion control best management practices can be obtained from the on site Construction Manager.

(4) Alignment changes may not exceed a distance of 200 feet between the old and new center lines in any natural resource.

(5) The activity may not alter more than 300 feet of shoreline (both shores added together) within a mile stretch of any river, stream or brook, including any bridge width or length of culvert.

(6) The activity may not alter more than 150 feet of shoreline (both shores added together) within a mile stretch of any outstanding river segment identified in 38 M.R.S.A. 480-P, including any bridge width or length of culvert.

(7) The activity must minimize wetland intrusion. The activity is exempt from the provisions of Chapter 310, the Wetland Protection Rules, if the activity alters less than 15,000 square feet of natural resources per mile of roadway (centerline measurement) provided that the following impacts are not exceeded within the 15,000 square foot area:

(a) 1,000 square feet of coastal wetland consisting of salt tolerant vegetation or shellfish habitat; or

(b) 5,000 square feet of coastal wetland not containing salt tolerant vegetation or shellfish habitat; or

(c) 1,000 square feet of a great pond.

All other activities must be performed in compliance with all sections of Chapter 310, the Wetland Protection Rules, except 310.2(C), 5(A), 9(1), 9(B) and 9(C).

(8) The activity may not permanently block any fish passage in any watercourse containing fish. The applicant must improve passage beyond what restriction may already exist unless the Department of Inland Fisheries and Wildlife, the Department of Marine Resources, the Atlantic Salmon Authority and the DEP's Division of Environmental Assessment concur that the improvement is not necessary.

(9) Rocks may not be removed from below the normal high water line of any coastal wetland, freshwater wetland, great pond, river, stream or brook except to the minimum extent necessary for completion of work within the limits of construction.

(10) If work is performed in a river, stream or brook that is less than three feet deep at the time and location of the activity, with the exception of culvert installation, the applicant must divert flow away from the activity while work is in progress.

(a) Diversion may be accomplished by the use of stable, inert material. No more than two thirds (2/3) of stream width may be diverted at one time.

(b) Any material used to divert water flow must be completely removed upon completion of the activity, and the stream bottom must be restored to its original condition.

(c) A pump may be operated, where necessary, for a temporary diversion. The pump outlet must be located and operated such that erosion or the discharge of sediment to the water is prevented.

NOTE: Guidance on the appropriate location of a diversion and materials which should be used for a stream diversion can be obtained from the on site Construction Manager.

(11) Wheeled or tracked equipment may not operate in the water. Equipment operating on the shore may reach into the water with a bucket or similar extension. Equipment may cross streams on rock, gravel or ledge bottom.

(12) All wheeled or tracked equipment that must travel or work in a vegetated wetland area must travel and work on mats or platforms.

(13) Any debris or excavated material must be stockpiled either outside the wetland or on mats or platforms. Hay bales or silt fence must be used, where necessary, to prevent sedimentation. Any debris generated during the activity must be prevented from washing downstream and must be removed from the wetland or water body. Disposal of debris must be in conformance with the Maine Hazardous Waste, Septage and Solid Waste Management Act, 38 M.R.S.A. Section 1301 et seq.

(14) Work below the normal high water line of a great pond, river, stream or brook must be done at low water except for emergency work or work agreed to by the resource agencies listed in paragraph 2 above. Measures, such as a silt boom or staked fencing, must be employed to reduce and isolate turbidity.

(15) Perimeter controls must be installed before the work starts. Disturbance of natural resources beyond the construction limits shown on the plans is not allowed under this rule.

NOTE: Guidance on the location of construction limits can be obtained from the on site Construction Manager.

(16) The use of untreated lumber is preferred. Lumber pressure treated with chromated copper arsenate (CCA) may be used, provided it is cured on dry land in a manner that exposes all surfaces to the air for a period of at least 21 days prior to construction. Wood treated with creosote or pentachlorophenol may not be used where it will contact water.

(17) A temporary road for equipment access must be constructed of crushed stone, blasted ledge, or similar materials that will not cause sedimentation or restrict fish passage. Such roads must be completely removed at the completion of the activity. In addition, any such temporary roads which are in rivers, streams or brooks, must allow for a passage of stormwater flows associated with a 10-year storm.

(18) Soil may not be disturbed during any period when soils are saturated due to rain or snow melt, except as necessary to protect work in progress or as required for bridge maintenance activities. Areas where soils are saturated (i.e. water drips from the soil when squeezed by hand, or the soil is capable of being rolled into a rod 1/8th inch in diameter that does not crumble) must be immediately mulched if they are disturbed.

(19) Disturbed soil must be protected within one week from the time it was last actively worked, and prior to any storm event, using temporary or permanent measures such as the placement of riprap, sod, mulch, erosion control blankets, or other comparable measures.

(20) Hay bale or straw mulch, where used, must be applied at a rate of at least one bale per 500 square feet (1 to 2 tons per acre).

(21) If mulch is likely to be moved because of steep slopes or wind exposure, it must be anchored with netting, peg and twine, binder or other suitable method and must be maintained until a catch of vegetation is established over the entire disturbed area.

(22) In addition to the placement of riprap, sod, erosion control blankets or mulch, additional steps must be taken where necessary to prevent sedimentation of the water Evidence of sedimentation includes visible sheet, rill or gully erosion, discoloration of water by suspended particles and/or slumping of banks. Silt fences, staked hay bales and other sedimentation control measures, where planned for, must be in place prior to the commencement of an activity, but must also be installed whenever necessary to prevent erosion and sedimentation.

NOTE: Guidance on the location and proper installation of erosion control measures can be obtained from the on site Construction Manager.

(23) Temporary erosion control measures must be maintained and inspected weekly until the site is permanently stabilized with vegetation or other permanent control measures. Erosion control measures must also be inspected immediately prior to and following storms.

(24) Permanent erosion control measures protecting all disturbed areas must be implemented within 30 days from the time the areas were last actively worked, or for fall and winter activities by the following June 15, except where precluded by the type of activity (e.g. riprap, road surfaces, etc.). The permanent erosion control measures must be maintained.

(25) The applicant shall immediately take appropriate measures to prevent erosion or sedimentation from occurring or to correct any existing problems, regardless of the time of year.

(26) Non-native species may not be planted in restored areas.

(27) Disposal of debris must be in conformance with Maine Hazardous Waste, Septage and Solid Waste Management Act, 38 M.R.S.A. Sections 1301 et seq.

(28) Disturbance of vegetation must be avoided, if possible. Where vegetation is disturbed outside of the area covered by any road or structure construction, it must be reestablished immediately upon completion of the activity and must be maintained.

(29) A vegetated area at least 25 feet wide must be established and maintained between any new stormwater outfall structure and the high water line of any open water body. A velocity reducing structure must be constructed at the outlet of the stormwater outfall that will create sheet flow of stormwater, and prevent erosion of soil within the vegetated buffer. If the 25 foot vegetated buffer is not practicable, the applicant must explain the reason for a lesser setback in writing. Approval from the DEP must be in writing and any recommendations must be incorporated into the activity.

C. Definitions. The following terms, as used in this chapter, have the following meanings, unless the context indicates otherwise:

(1) Diversion. A rerouting of a river, stream or brook to a location outside of its established channel.

(2) Fill. a. (verb) To put into or upon, supply to, or allow to enter a water body or wetland any earth, rock, gravel, sand, silt, clay, peat, or debris; b. (noun) Material, other than structures, placed in or immediately adjacent to a wetland or water body.

(3) Floodplain wetlands. Freshwater wetlands that are inundated with flood water during a 100-year flood event based on flood insurance maps produced by the Federal Emergency Agency or other site specific information.

(4) Riprap. Rocks that are fit into place, usually without mortar, on a slope as defined in the State of Maine, Department of Transportation, Standard Specifications for Highway and Bridges, revision of April 1995.

Permit No: GP-39

Effective Date: Sept. 29, 2000
Expiration Date: Sept. 29, 2005

Applicant: General Public, State of Maine

DEPARTMENT OF THE ARMY
PROGRAMMATIC GENERAL PERMIT
STATE OF MAINE

The New England District of the U.S. Army Corps of Engineers hereby issues a programmatic general permit (PGP) that expedites review of minimal impact work in coastal and inland waters 1 and wetlands within the State of Maine. Activities with minimal impacts, as specified by the terms and conditions of this general permit and on the attached DEFINITION OF CATEGORIES sheets, are either non-reporting (provided required local and state permits are received), or are reporting, to be screened by the Corps and Federal Resource Agencies for applicability under the general permit. This general permit does not affect the Corps individual permit review process or activities exempt from Corps jurisdiction.

Activities Covered: work and structures that are located in, or that affect, navigable waters of the United States (regulated by the Corps under Section 10 of the Rivers and Harbors Act of 1899) and the discharge of dredged of fill material into waters of the United States (regulated by the Corps under Section 404 of the Clean Water Act), and the transportation of dredged material for the purpose of disposal in the ocean (regulated by the Corps under Section 103 of the Marine Protection, Research and Sanctuaries Act).

PROCEDURES:

A. **State Approvals**

For projects authorized pursuant to this general perrnit that are also regulated by the State of Maine, the following state approvals are also required and must be obtained in order for this general permit authorization to be valid (applicants are responsible for ensuring that all required state permits and approval have been obtained):

(a) Maine Department of Environmental Protection (DEP): Natural Resources Protection Act permit, including permit-by-rule and general permit authorizations; Site Location and Development Act permit; and Maine Waterway Development and Conservation Act.
(b) Maine Department of Conservation: Land Use Regulation Commission (LURC) permit.
(c) Maine Department of Marine Resources: Lease.
(d) Bureau of Public Lands, Submerged Lands: Lease.

Note that projects not regulated by the State of Maine (e.g., seasonal floats or moorings) may still be authorized by this general permit.

B. **Corps Authorizations: Category I (Non-Reporting)**

Work in Maine subject to Corps jurisdiction that meets the definition of Category I on the attached DEFINITION OF CATEGORIES sheets and that meets all of this permit's other conditions, does not require separate application to the Corps of Engineers. If the State or the Corps does not contact the applicant for PBRs and Tier One permits during the State's Tier One 30-day review period, Corps approval may be assumed and the project may proceed. Refer to the Procedures Section at Paragraph E below for additional information regarding screening.

Note that the review thresholds under Category I apply to single and complete projects i only (see special condition 5). **Also note that Category I does not apply to projects occurring in a component of, or within 0.25 miles up and downstream of the main stem or tributaries of a river segment of the National Wild and Scenic River System** (see condition 11, and page 9 for the listed rivers in Maine).

There are also restrictions on other national lands or concerns, which must be met in order for projects to be eligible for authorization under this PGP. Refer to special conditions 6-13 under Paragraph F below.

Work that is not regulated by the State of Maine, but that is subject to Corps jurisdiction, is eligible for Corps authorization under this PGP in accordance with the review thresholds and conditions contained herein.

Although Category I projects are non-reporting, the Corps reserves the right to require screening or an individual permit review if there are concerns for the aquatic environment or any other factor of the public interest (see special condition 4 on Discretionary Authority). The Corps review or State/Federal screening process may also result in project modification, mitigation or other special conditions necessary to minimize impacts and protect the aquatic environment as a requirement for PGP approval.

C. Corps Authorization: Category II (Reporting - requiring screening)
APPLICATION PROCEDURES

For projects that do not meet the terms of Category I (see DEFINITION OF CATEGORIES sheets), the Corps, State, and Federal Resource Agencies will conduct joint screening meetings to review applications. If projects are concurrently regulated by the DEP or LURC, applicants do not need to submit separate applications to the Corps. For projects not regulated by DEP or LURC, applicants must submit an application to the Corps Maine Project Office for a case-by-case determination of eligibility under this general permit (Category II). **Category II projects may not proceed until written notification is received from the Corps.**

Category II projects which occur in a component of, or within 0.25 mile up or downstream of the main stem or tributaries of a river segment of the National Wild and Scenic River System, will be coordinated with the National Park Service (see special condition 11, and page 9 for listed rivers in Maine).

There are also restrictions on other national lands or concerns, which must be met in order for projects to be eligible for authorization under this PGP. Refer to special conditions 6-14 under Paragraph E below.

Category II applicants shall submit a copy of their application materials to the Maine Historic Preservation Commission and/or applicable Indian tribe(s) at the same time, or before, they apply to the DEP, LURC, or the Corps so that the project can be reviewed for the presence of historic/archaeological resources in the project area that may be affected by the proposed work. **Applications to the DEP or the Corps should include information to indicate that this has been done (applicant's statement or copy of cover letter to Maine Historic Preservation Commission and/or Indian tribe(s)).**

The Corps may require additional information on a case-by-case basis as follows:

(a) purpose of project;

(b) 8 1/2" by l l " plan views of the entire property including property lines and project limits with existing and proposed conditions **(legible, reproducible plans required);**

(c) wetland delineation for the site, information on the basis of the delineation, and calculations of waterway and wetland impact areas (see special condition 2);

(d) typical cross-section views of all wetland and waterway fill areas and wetland replication areas;

(e) delineation of submerged aquatic vegetation, e.g., eel grass beds, in tidal waters;

(f) area, type and source of fill material to be discharged into waters and wetlands, including the volume of fill below ordinary high water in inland waters and below the high tide line in coastal waters;

(g) mean low, mean high water and high tide elevations in navigable waters;

(h) limits of any Federal navigation project in the vicinity and State Plane coordinates for the limits of the proposed work closest to the Federal project;

(i) on-site alternatives analysis (contact Corps for guidance);

(j) identify and describe potential impacts to Essential Fish Habitat (contact Corps for guidance);

(k) for dredging projects, include:
1) the volume of material and area in square feet to be dredged below mean high water,
2) existing and proposed water depths,
3) type of dredging equipment to be used,
4) nature of material (e.g., silty sand),

5) any existing sediment grain size and bulk sediment chemistry data for the proposed or any nearby projects,
6) information on the location and nature of municipal or industrial discharges and occurrences of any contaminant spills in or near the project area,
7) location of the disposal site (include locus sheet),
8) shellfish survey, and
9) sediment testing, including physical, chemical and biological testing. For projects proposing open water disposal, applicants are encouraged to contact the Corps as early as possible regarding sampling and testing protocols.

The Corps may request additional information. Dredging applicants may be required to conduct a shellfish and/or eel grass survey and sediment testing, including physical, chemical and biological testing. Sediment sampling and testing plans should be prepared or approved by the Corps before the samples are collected.

STATE-FEDERAL SCREENING PROCEDURES:

The Corps intends to utilize the application information required by the State for its regulatory program to the maximum extent practicable and the Corps normally will not be interacting with an applicant who is concurrently making application to the DEP or LURC. Projects not regulated by the State, but needing Corps of Engineers approval, **must apply directly to the Corps.** The joint screening meeting for Category II projects will occur regularly at the Corps or State of fices and will involve representatives from the DEP, the Corps, the U.S. Environmental Protection Agency, the U.S. Fish and Wildlife Service, and the National Marine Fisheries Service.

The Corps and Federal Resource Agencies will classify the project within the State's review period, not to exceed 60 days, as: 1) approvable under the PGP as proposed; 2) needs additional information, including possible project modification, mitigation or other special conditions to minimize impacts; or 3) exceeds the terms or conditions of the PGP, including the minimal effects requirement, and an individual permit review will be required. In addition, the Corps retains the ability to exercise its discretionary authority and require an individual permit, irrespective of whether the terms and conditions of this general permit are met, based on concerns for the aquatic environment or any factor of the public interest (see special condition 4 on Discretionary Authority). All Category II projects must receive written approval from the Corps before work can proceed. If the project is not approvable as proposed, the DEP, LURC, or the Corps will contact the applicant to discuss the concerns raised. If the applicant is unable to resolve the concerns, the Corps, independently or at the request of the Federal Resource Agencies, will require an individual permit for the project. The applicant will be notified of this in writing, along with information about submitting the necessary application materials. The comments from the Federal Resource Agencies to the Corps may be verbal initially, and must be made within 10 working days of the screening meeting. These comments must be confirmed in writing within 10 calendar days of the verbal response if the Resource Agency(ies) will request an individual permit. The Federal Resource Agency's comments must reflect a concern within their area of expertise, state the species or resources that could be impacted by the project, and describe the impacts that either individually or cumulatively will be more than minimal.

MINERALS MANAGEMENT SERVICE (MMS) REVIEW

For Category II projects which involve construction of solid fill structures or discharge of fills along the coast which may extend the coastline or baseline from which the territorial sea is measured, coordination between the Corps and Minerals Management Service (MMS), Continental Shelf (OCS) Survey Group, will be needed (pursuant to the Submerged Lands Act, 43 U.S.C., Section 1301-1315, 33 CFR 320.4(f). During the screening period, the Corps will forward project information to MMS for their review. MMS will coordinate their determination with the Department of the Interior (DOI) Solicitor's Office. The DOI will have 15 calendar days from the date MMS is in receipt of project information to determine if the baseline will be affected. No notification to the Corps within 15 day review period will constitute a "no affect" determination. Otherwise, the solicitor's notification to the Corps may be verbal but must be followed with a written confirmation within 10 business days from the date of the verbal notification. This procedure will be eliminated if the State of Maine provides a written waiver of interest in any increase in submerged lands caused by a change in the baseline resulting from solid fill structure or fills authorized under this general permit.

D. Corps Authorization: Category III (Individual Permit)

Work that is in the INDIVIDUAL PERMIT category on the attached DEFINITION OF CATEGORIES sheets, or that does not meet the terms and conditions of this general permit, will require an application for an individual permit from the Corps of Engineers (see 33 CFR Part 325.1). The screening procedures outlined above will only serve to delay project review in such cases. The applicant should submit the appropriate application materials (including the Corps application form) at the earliest possible date. General information and application forms can be obtained at (207) 623-8367 (Maine Field Office), (800) 343-4789, or (800) 362-4367 in Massachusetts. Individual water quality certification and coastal zone management consistency concurrence will be required from the State of Maine before Corps permit issuance.

E. Programmatic General Permit Conditions:

The following conditions apply to activities authorized under the PGP, including all Category I (non-reporting) and Category II (reporting - requiring screening) activities:

GENERAL REQUIREMENTS:

1. **Other Permits.** Authorization under this general permit does not obviate the need to obtain other Federal, state, or local authorizations required by law.

2. **Applicability of this general permit shall be evaluated with reference to Federal jurisdictional boundaries.** Applicants are responsible for ensuring that the boundaries used satisfy the federal criteria defined at 33 CFR 328-329.

3. **Minimal Effects.** Projects authorized by this general permit shall have minimal individual and cumulative adverse environmental impacts as determined by the Corps.

4. **Discretionary Authority.** Notwithstanding compliance with the terms and conditions of this permit, the Corps of Engineers retains discretionary authority to require review for an individual permit based on concerns for the aquatic environment or for any other factor of the public interest. This authority is invoked on a case-by-case basis whenever the Corps determines that the potential consequences of the proposal warrant individual review based on the concerns stated above. This authority may be invoked for projects with cumulative environmental impacts that are more than minimal or if there is a special resource or concern associated with a particular project that is not already covered by the remaining conditions of the PGP and that warrants greater review.

Whenever the Corps notifies an applicant that an individual permit may be required, authorization under this general permit is void and no work may be conducted until the individual Corps permit is obtained or until the Corps notifies the applicant that further review has demonstrated that the work may proceed under this general permit.

5. **Single and Complete Projects.** This general permit shall not be used for piecemeal work and shall be applied to single and complete projects. All components of a single project and/or all planned phases of multi-phased projects shall be treated together as constituting one single and complete project (e.g., subdivisions should include all work such as roads, utilities, and lot development). This general permit shall not be used for any activity that is part of an overall project for which an individual permit is required.

NATIONAL CONCERNS:

6. St. **John/St. Croix Rivers.** This covers work within the Saint John and Saint Croix River basins that requires approval of the International Joint Commission. This includes any temporary or permanent use, obstruction or diversion of international boundary waters which could affect the natural flow or levels of waters on the Canadian side of the line, as well as any construction or maintenance of remedial works, protective works, dams, or other obstructions in waters downstream from boundary waters when the activity could raise the natural level of water on the Canadian side of the boundary.

7. **Historic Properties.** Any activity authorized by this general permit shall comply with Section 106 of the National Historic Preservation Act. Information on the location and existence of historic resources can be obtained from the Maine Historic Preservation Commission and the National Register of Historic Places. Federally recognized tribes (Penobscots, Passamaquoddys, Micmacs, and Maliseets) may know of the existence of other sites that may be of significance to their tribes. See page 14 for historic properties contacts.

Applicants with projects which will undergo the screening process (Category II) shall submit a copy of their application materials, with the name and address of the applicant clearly indicated, to the Maine Historic Preservation Commission, 55 Capitol Street, State House Station 65, Augusta, Maine 04333, and to the applicable tribe(s) to be reviewed for the presence of historic and/or archaeological resources in the permit area that may be affected by the proposed work. The Corps will then be notified by the Commission and/or

Tribe within 10 days if there are State and/or tribal concerns that the proposed work will have an effect on historic resources. The applicant should include with their application to the State or the Corps either a copy of their cover letter or a statement of having sent their application material to the Commission and Tribe(s).

If the permittee, either prior to construction or during construction of the work authorized herein, encounters a previously unidentified archaeological or other cultural resource, within the area subject to Department of the Army jurisdiction, that might be eligible for listing in the National Register of Historic Places, he/she shall stop work and immediately notify the District Engineer and the Maine Historic Preservation Commission and/or applicable Tribe(s).

8. **National Lands.** Activities authorized by this general permit shall not impinge upon the value of any National Wildlife Refuge, National Forest, or any area administered by the National Park Service.

9. **Endangered Species.** No activity is authorized under this general permit which
- may affect a threatened or endangered species or a species proposed for such designation as identified under the Federal Endangered Species Act (ESA),
- is likely to destroy or adversely modify the critical habitat or proposed critical habitat of such species,
- would result in a 'take' of any threatened or endangered species of fish or wildlife, or
- would result in any other violation of Section 9 of the ESA protecting threatened or endangered species of plants.

Applicants shall notify the Corps if any listed species or critical habitat, or proposed species or critical habitat, is in the vicinity of the project and shall not begin work until notified by the District Engineer that the requirements of the Endangered Species Act have been satisfied and that the activity is authorized. Information on the location of threatened and endangered species and their critical habitat can be obtained from the U.S. Fish and Wildlife Service and National Marine Fisheries Service (addresses attached, page 14).

10. **Essential Fish Habitat.** As part of the PGP screening process, the Corps will coordinate with the National Marine Fisheries Service (NMFS) in accordance with the 1996 amendments to the Magnuson-Stevens Fishery and Conservation Management Act to protect and conserve the habitat of marine, estuarine and anadromous finfish, mollusks, and crustaceans. This habitat is termed "essential fish habitat (EFH)", and is broadly defined to include "those waters and substrate necessary to fish for spawning, breeding, feeding, or growth to maturity." Applicants may be required to describe and identify potential impacts to EFH based upon the location of the proj ect, the activity proposed, and the species present. Conservation recommendations made by NMFS will normally be included as a permit requirement by the Corps. Information on the location of EFH can be obtained from the NMFS regulations (50 CFR Part 600) (address listed on page 14) and on their web site (http://www.nero.nmfs.gov/ro/doc/webintro.html).

The EFH designation for Atlantic salmon includes all aquatic habitats in the watershed of the following rivers and streams, including all tributaries to the extent that they are currently or were historically accessible for salmon migration:

St. Croix River	PleasantRiver	UnionRiver
Boyden River	Narraguagus River	Ducktrap River
Dennys River	Tunk Stream	Sheepscot River
Hobart Stream	Patten Stream	Kennebec River
Aroostook River	Orland River	Androscoggin River
East Machias River	Penobscot River	Presumpscot River
Machias River	Passagassawaukeag River	Saco River

11. **Wild and Scenic Rivers.** Any activity that occurs in a component of, or within 0.25 mile up or downstream of the main stem or tributaries of a river segment of the National Wild and Scenic River System, **must be reviewed by the Corps under the procedures of Category II of this general permit regardless of size of impact.** This condition applies to both designated wild and scenic rivers and rivers designated by Congress as study rivers for possible inclusion while such rivers are in an official study status. The Corps will consult with the National Park Service (NPS) with regard to potential impacts of the proposed work on the resource values of the Wild and Scenic River. The culmination of this coordination will be a determination by the NPS and the Corps that the work: (1) may proceed as proposed; (2) may proceed with recommended conditions; or (3) could pose a direct and adverse effect on the resource values of the river and an individual permit is required. If pre-application consultation between the applicant and the NPS has occurred whereby the NPS has made a determination that the proposed project is appropriate for authorization under this PGP (with respect to wild and scenic river issues), this determination should be furnished to the Corps with submission of the application. The address of the NPS can be found on Page 14 of this permit. *National Wild/Scenic Rivers System (Designated River in Maine) as of 5/2/00:* Allagash River beginning at Telos Dam continuing to Allagash checkpoint at Eliza Hole Rapids, approximately 3 miles upstream of the confluence with the St. John River. Length = 92 miles

12. **Federal Navigation Project.** Any structure or work that extends closer to the horizontal limits of any Corps navigation project than a distance of three times the project's authorized depth (see attached map following page 16 for locations of these projects) shall be subject to removal at the owner's expense prior to any future Corps dredging or the performance of periodic hydrographic surveys.

13. **Navigation.** There shall be no unreasonable interference with navigation by the existence or use of the activity authorized herein and no attempt shall be made by the permittee to prevent the full and free use by the public of all navigable waters at or adjacent to the activity authorized herein.

The permittee understands and agrees that, if future operations by the United States require the removal, relocation, or other alteration, of the structure or work herein authorized, or if, in the opinion of the Secretary of the Army or his authorized representative, said structure

or work shall cause unreasonable obstruction to the free navigation of the navigable waters, the permittee will be required, upon due notice from the Corps of Engineers, to remove, relocate, or alter the structural work or obstructions caused thereby, without expense to the United States. No claim shall be made against the United States on account of any such removal or alteration.

14. **Federal Liability.** In issuing this permit, the Federal Government does not assume any liability for the following: (a) damages to the permitted project or uses thereof as a result of other permitted or unpermitted activities or from natural causes; (b) damages to the permitted project or uses thereof as a result of current or future activities undertaken by or on behalf of the United States in the public interest; (c) damages to persons, property, or to other permitted or unpermitted activities or structures caused by the activity authorized by this permit; (d) design or construction deficiencies associated with the permitted work; (e) damage claims associated with any future modification, suspension, or revocation of this permit.

MINIMIZATION OF ENVIRONMENTAL IMPACTS:

15. **Minimization.** Discharges of dredged or fill material into waters of the United States shall be avoided and minimized to the maximum extent practicable, regardless of review category.

16. **Work in Wetlands.** Heavy equipment working in wetlands shall be avoided if possible, **and if required, shall be placed on mats or other measures taken** to minimize soil and vegetation disturbance. Disturbed areas in wetlands shall be restored to preconstruction contours and conditions upon completion of the work.

17. **Temporary Fill.** Temporary fill in waters and wetlands authorized by this general permit (e.g., access roads, cofferdams) shall be properly stabilized during use to prevent erosion. Temporary fill in wetlands shall be placed on geotextile fabric laid on existing wetland grade. Temporary fills shall be disposed of at an upland site, suitably contained to prevent erosion and transport to a waterway or wetland. Temporary fill areas shall be restored to their approximate original contours but not higher. No temporary fill shall be placed in waters or wetlands unless specifically authorized by the Corps.

18. **Sedimentation and Erosion Control.** Adequate sedimentation and erosion control management measures, practices and devices, such as phased construction, vegetated filter strips, geotextile silt fences or other devices, shall be installed and properly maintained to reduce erosion and retain sediment on-site during and after construction. They shall be capable of preventing erosion, of collecting sediment, suspended and floating materials, and of filtering fine sediment. These devices shall be removed upon completion of work and the disturbed areas shall be stabilized. The sediment collected by these devices shall be removed and placed at an upland location in a manner that will prevent its later erosion into a waterway or wetland. All exposed soil and other fills shall be permanently stabilized at the earliest practicable date.

19. **Waterway Crossings.**

(a) All temporary and permanent crossings of waterbodies shall be suitably culverted, bridged, or otherwise designed to withstand and to prevent the restriction of high flows, to maintain existing low flows, and to not obstruct the movement of aquatic life indigenous to the waterbody beyond the actual duration of construction.
(b) Temporary bridges, culverts, or cofferdams shall be used for equipment access across streams (NOTE: areas of fill and/or cofferdams must be included in total waterway/wetlands impacts to determine applicability of this general permit).
(c) For projects that otherwise meet the terms of Category I, instream construction work shall be conducted during the low flow period July 15 - October 1 in any year. Projects that are not to be conducted during that time period are ineligible for Category I and shall be screened pursuant to Category II, regardless of the waterway and wetland fill and/or impact area.

20. **Discharge of Pollutants.** All activities involving any discharge of pollutants into waters of the United States authorized under this general permit shall be consistent with applicable water quality standards, effluent limitations, standards of performance, prohibitions, and pretreatment standards and management practices established pursuant to the Clean Water Act (33 U.S.C. 1251) and applicable state and local laws. If applicable water quality standards, limitations, etc., are revised or modified during the term of this permit, the authorized work shall be modified to conform with these standards within six months of the effective date of such revision or modification, or within a longer period of time deemed reasonable by the District Engineer in consultation with the Regional Administrator of the Environmental Protection Agency. Applicants may presume that state water quality standards are met with issuance of the 401 Water Quality Certification.

21. **Spawning Areas.** Discharges into known 1) fish and shellfish spawning or nursery areas; and 2) amphibian and waterfowl breeding areas, during spawning or breeding seasons shall be avoided, and impacts to these areas shall be avoided or minimized to the maximum extent practicable during all times of year.

22. **Storage of Seasonal Structures.** Coastal structures such as pier sections and floats that are removed from the waterway for a portion of the year shall be stored in an upland location located above mean high water and not in tidal marsh.

23. **Environmental Values.** The permittee shall make every reasonable effort to carry out the construction or operation of the work authorized herein in a manner so as to maintain as much as is practicable, and to minimize any adverse impacts on, existing fish and wildlife and natural environmental values.

24. **Protection of Vernal Pools.** Impacts to uplands in proximity (within 500 feet) to the vernal pools referenced in DEFINITIONS OF CATEGORIES shall be minimized to the maximum extent possible.

PROCEDURAL CONDITIONS:

25. **Cranberry Development Projects.** For Cranberry development projects authorized under the PGP, the following conditions apply:

4

1. If a.cranberry bog is abandoned for any reason, the area must be allowed to convert to natural wetlands unless an individual permit is obtained from the Corps of Engineers allowing the discharge of fill for an alternate use.
2. No stream diversion shall be allowed under this permit.
3. No impoundment of perennial streams shall be allowed under this permit.
4. The project shall be designed and constructed to not cause flood damage on adjacent properties.

26. **Inspections.** The permittee shall permit the District Engineer or his authorized representative(s) to make periodic inspections at any time deemed necessary in order to ensure that the work is being performed in accordance with the terms and conditions of this permit. The District Engineer may also require post-construction engineering drawings for completed work, and post-dredging survey drawings for any dredging work. **To facilitate these inspections, the attached work notification form should be filled out and returned to the Corps for all Category II projects.**

27. Maintenance. The permittee shall maintain the work or structures authorized herein in good condition, including maintenance, to ensure public safety. Dredging projects: note that this does not include maintenance of dredging projects. Maintenance dredging is subject to the review thresholds described on the attached DEFINITION OF CATEGORIES sheets and/or any conditions included in a written Corps authorization.

28. **Property Rights.** This permit does not convey any property rights, either in real estate or material, or any exclusive privileges, nor does it authorize any injury to property or invasion of rights or any infringement of federal, state, or local laws or regulations. If **property associated with work authorized by the PGP is sold, the PGP authorization is automatically transferred to the new property owner. The new property owner should provide this information to the Corps in writing. No acknowledgement from the Corps is necessary.**

29. **Modification, Suspension, and Revocation.** This permit may be either modified, suspended, or revoked, in whole or in part, pursuant to the policies and procedures of 33 CFR 325.7 and any such action shall not be the basis for any claim for damages against the United States.

30. **Restoration.** The permittee, upon receipt of a notice of revocation of authorization under this permit, shall restore the wetland or waterway to its former condition without expense to the United States and as directed by the Secretary of the Army or his authorized representative. If the permittee fails to comply with such a directive, the Secretary or his designee may restore the wetland or waterway to its former condition, by contract or otherwise, and recover the cost from the permittee.

31. **Special Conditions.** The Corps, independently or at the request of the Federal Resource Agencies, may impose other special conditions on a project authorized pursuant to this general permit that are determined necessary to minimize adverse environmental effects or based on any other factor of the public interest. Failure to comply with all conditions of the authorization, including special conditions, will constitute a permit violation and may subject the permittee to criminal, civil, or administrative penalties or restoration.

32. **False or Incomplete Information.** If the Corps makes a determination regarding the eligibility of a project under this permit and subsequently discovers that it has relied on false, incomplete, or inaccurate information provided by the permittee, the permit shall not be valid and the government may institute appropriate legal proceedings.

33. **Abandonment.** If the permittee decides to abandon the activity authorized under this general permit, unless such abandonment is merely the transfer of property to a third party, he/she must restore the area to the satisfaction of the District Engineer.

34. **Enforcement cases.** This general permit does not apply to any existing or proposed activity in Corps jurisdiction associated with an on-going Corps of Engineers or Environmental Protection Agency enforcement action until such time as the enforcement action is resolved or the Corps determines that the activity may proceed independently without compromising the enforcement action. The Corps may choose not to accept applications or issue permits to any applicant with outstanding violations.

35. **Emergency situations.** This PGP can be used to authorize the repair, rehabilitation, or replacement of those structures destroyed by storms, floods, fire or other discrete unexpected and catastrophic event. In such situations and if the work exceeds Category I limitations, if applicant applies to the Corps within 30 days of the event, the Corps will attempt to contact the resource agencies for their approvals but, if unable to contact them, will issue an emergency permit and review them after-the-fact with the agencies at the next joint processing meeting. Proposed work submitted more than 30 days after the emergency will go through the standard PGP procedures.

DURATION OF AUTHORIZATION/GRANDFATHERING:

36. **Duration of Authorization.** Activities authorized under this general permit that have commenced (i.e., are under construction) or are under contract to commence in reliance upon this authorization will remain authorized provided the activity is completed within twelve months of the date of the general permit's expiration, modification, or revocation, unless discretionary authority has been exercised on a case-by-case basis to modify, suspend, or revoke the authorization in accordance with 33 CFR 325.2 (e)(2). Activities completed under the authorization of the general permit that was in effect at the time the activity was completed will continue to be authorized by the general permit.

37. **Previously Authorized Activities.**

(a) Activities which have commenced (i.e., are under construction or are under contract to commence) prior to the issuance date of this general permit, in reliance upon the terms and conditions of the non-reporting category of the previous Maine PGP shall remain authorized provided the activity is completed within twelve months of the date of issuance of this general permit, unless discretionary authority has been exercised on a case-by-case basis to modify, suspend, or revoke the authorization in accordance with special condition 4. The applicant must be able to document to the Corps satisfaction that the proj ect was under construction or contract by the appropriate date.

(b) Projects that have received written verification or approval from the Corps, based on applications made to the Corps prior to issuance of this general permit, for the previous Maine SPGP and PGP, Nationwide permits, regional general permits, or letters of permission shall remain authorized as specified in each authorization.

(c) This general permit does not affect activities authorized pursuant to 33 CFR Part 330.3 (activities occurring before certain dates).

For DISTRICT ENGiNEER Christine Gedfrey DATE 7 / 26 / 00

CONTACTS FOR MAINE PROGRAMMATIC GENERAL PERMIT:

U.S. Army Corps of Engineers
Maine Project Office
675 Western Avenue #3
Manchester, Maine 04351
207-623-8367
Fax # 207-623-8206

Federal Endangered Species
U.S. Fish and Wildlife Service
Maine Field Office
1033 South Main Street
Old Town, Maine 04468
207-827-5938
Fax # 207-827-6099

Federal Endangered Species and Essential Fish Habitat
National Marine Fisheries Service
One Blackburn Drive
Gloucester, Massachusetts 01939
978-281-9102
Fax # 978-281-9301

Wild and Scenic Rivers
National Park Service
North Atlantic Region
15 State Street
Boston, MA 02109
617-223-5203

Maine Historic Preservation Commission
55 Capitol Street
State House Station 65
Augusta, Maine 04333
207-287-2132
Fax # 207-287-2335

Aroostook Band of Micmacs
P.O. Box 772
Presque Isle, Maine 04769
207-764-1972
Fax # 207-764-7667

Passamaquoddy Tribe of Indians
Pleasant Point Reservation
Attn: Tribal Council
P.O. Box 343
Perry, Maine 04667
207-853-2600
Fax # 207-853-6039

Houlton Band of Maliseet Indians
Attn: Brenda Commander, Tribal Chief
Route 3 - Box 450
Houlton, Maine 04730
207-532-4273
Fax # 207-532-2660

Passamaquoddy Tribe of Indians
Indian Township Reservation
Attn: Donald Soctomah
P.O. Box 301
Princeton, Maine 04668
207-796-2301
Fax # 207-796-5256

Penobscot Indian Nation
Richard Hamilton, Chief
6 River Road
Indian Island Reservation
Old Town, Maine 04468
(207) 827-7776
Fax # 207-827-1137

Maine Department of Environmental Protection
(For State Permits and Water Quality Certifications)
Natural Resources Division
Bureau of Land and Water Quality Control
State House Station 17
Augusta, Maine 04333
207-287-2111

Southern Maine Regional Office
312 Canco Road
Portland, Maine 04103
201-822-6300

Eastern Maine Regional Office
106 Hogan Road
Bangor, Maine 04401
207-941-4570

Northern Maine Regional Office
1235 Central Drive
Skyway Park
Presque Isle, Maine 04769
207-764-0477

MaineLand UseRegulation Commission (LURC) offices
22 State House Station
Augusta, ME 04333-0022
207-287-2631
800-452-8711 (call to obtain appropriate LURC of fice)
Fax # 207-287-7439

45 Radar Road
Ashland,ME 04732-3600
207-435-7963
Fax # 207-435-7184

Lakeview Drive
P.O.BoxllO7
Greenville, ME 04441
207-695-2466
Fax # 207-695-2380

191 Main Street
EastMillinocket,ME 04430
207-746-2244
Fax # 207-746-2243

i

(For CZMDeterminations)
State Planning Office
Coastal Program
184 State Street
State House Station 38
Augusta, Maine 04333
207-287- 1009

Maine Department of Marine Resources
(For Aquaculture Leases)
McKown Point
Boothbay Harbor, Maine 04575
207-633-9500

(For Submerged Lands Leases)
Maine Department of Conservation
Bureau of Parks and Lands
22 State House Station
207-287-3061

A. INLAND WETLANDS (WATERS OF THE U.S.)[1]	CATEGORY I	CATEGORY II	INDIVIDUAL PERMIT
(a) NEW FILL/ EXCAVATION DISCHARGES	Less than 4,300 sf inland waterway and /or wetland fill and secondary impacts (e.g., areas drained, flooded or cleared). -- Includes projects covered by a State Tier One permit with no cumulative impacts over 15,000 sf in inland wetlands from previous permits, unauthorized work, and/or other state permits. -- Includes crossing of perennial waterways designated as Essential Fish Habitat (EFH) for Atlantic salmon[2] if the waterway is crossed with a span and footprints of the span abutments are outside ordinary high water with no more than 4,300 sf of associated wetland impact. -- Includes in-stream work of up to 4,300 sf of fill below ordinary high water in waterways not designated as EFH for Atlantic salmon[2] and performed in accordance with Maine Permit By Rule standards or a LURC permit.	4,300 sf to 3 acres inland waterway and/or wetland fill and secondary impacts (e.g., areas drained, flooded or cleared). -- Impact area includes all temporary and permanent fill and excavation discharges except for incidental fallback. -- Includes in-stream work, including crossings (other than a spanned crossing as described in Category I) with any discharge of fill below ordinary high water in perennial waterways designated as EFH for Atlantic salmon[2]. -- Time of year restrictions determined case-by-case.	Greater than 3 acres inland waterway and/or wetland fill and secondary impacts (e.g., areas drained, flooded or cleared). -- Impact area includes all temporary and permanent fill and excavation discharges except for incidental fallback[3]. In-stream work exceeding Category II limits. If EIS required by the Corps.

[1] Water of the U.S. in inland areas: inland rivers, streams, lakes, ponds and wetlands.
[2] Essential Fish Habitat for Atlantic salmon includes all aquatic habitats in the watersheds of the following rivers and streams, including all tributaries to the extent that they are currently or were historically accessible for salmon migration: St. Croix, Boyden, Dennys, Hobart Stream, Aroostook, East Machias, Machias, Pleasant, Narraguagus, Tunk stream, Patten Stream, Orland, Penobscot, Passagassawaukeag, Union, Ducktrap, Sheepscot, Kennebec, Androscoggin, Presumpscot and Saco River.
[3] The larger the impacts, the more likely an individual permit will be required. Projects involving widening, expansion or impacts to degraded or low value wetlands between 1-3 acres may be approved under Category II, subject to the Federal screening. The Corps recognizes and endorses the DEP Tier 2 upper thresholds of 1 acre. Compensatory mitigation is likely to be required at this level of impact.

	CATEGORY I	CATEGORY II	INDIVIDUAL PERMIT
(a) NEW FILL/ EXCAVATION DISCHARGES	-- Impact area includes all temporary and permanent fill and excavation discharges except for incidental fallback. -- In-stream work limited to July 15 - Oct. 1. -- This category excludes situations when a vernal pool of any size may be impacted, in accordance with the ME DEP definition of vernal pool[4]. -- This category excludes work within ¼ mile or a Wild and Scenic River[5]. -- This category excludes dams, dikes, or activities involving water withdrawal or water diversion. -- This category excludes work in National Wildlife Refuges.	Proactive restoration projects with any amount of impact can be reviewed under Category II. The Corps, in consultation with State and Federal agencies, must determine that net adverse effects are not more than minimal.	
(b) BANK STABILIZATION PROJECTS	Inland bank stabilization less than 500 ft. long and less than 1 cy fill per linear foot below ordinary high water in ponds, lakes, and waterway not designated as EFH for Atlantic salmon[2], provided there is no wetland fill. -- In-stream work limited to July 15 - Oct. 1.	Inland bank stabilization in ponds, lakes, and waterways not designated as EFH for Atlantic salmon[2] which exceeds Category I limits. Inland bank stabilization of any size below ordinary high water in waterways designed as EFH for Atlantic salmon[2]. -- Other stabilization exceeding Category I.	
(C) REPAIR AND MAINTENANCE OF AUTHORIZED FILLS	Repair or maintenance of existing, currently serviceable, authorized fills with no substantial expansion or change in use.	Replacement of non-serviceable fills, or repair or maintenance of serviceable fills with expansion of any amount up to 1 acre, or with a change in use.	Replacement of non-serviceable fills, or repair or maintenance of serviceable fills with greater than 1 acre of expansion.

[4] Vernal Pool: Naturally-occurring, or intentionally created for the purposes of compensatory mitigation, temporary to permanent bodies of water occurring in shallow depressions that fill during the spring and fall and may dry during the summer. Vernal pools have no permanent or viable populations of predatory fish. Vernal pools provide the primary breeding habitat for wood frogs, spotted salamanders, blue-spotted salamanders, and fairy shrimp, and provide habitat for other wildlife including several endangered and threatened species.

[5] National Wild/Scenic Rivers System (Designated River in Maine): Allagash River beginning at Telos Dam continuing to Allagash checkpoint at Eliza Hole Rapids, approximately 3 miles upstream of the confluence with the St. John River. Length = 92 miles.

4 5 6 7 8 ?

B. TIDAL WATERS AND NAVIGABLE WATERS[6]	CATEGORY I	CATEGORY II	INDIVIDUAL PERMIT
(a) FILL		Up to 1 acre waterway or wetland fill and secondary impacts (e.g., areas drained, flooded or cleared). Includes temporary and permanent waterway fill. -- Temporary tidal marsh impacts up to 1 acre. -- Permanent tidal marsh, mudflat, or vegetated shallows[7] fill up to 1,000 sf. -- Proactive restoration projects with any amount of impact can be reviewed under Cat. II. The Corps, in consultation with State and Federal agencies, must determine that net adverse effects are not more than minimal.	Greater than 1 acre waterway fill and secondary impacts (e.g., areas drained, flooded or cleared). Includes -- Temporary tidal marsh impacts over 1 acre. -- Permanent tidal marsh, mudflat, or vegetated shallows[7] fill over 1,000 sf.
(b) REPAIR AND MAINTENANCE WORK	Repair or maintenance of existing, currently serviceable, authorized structure or fills with no substantial expansion or change in use. -- Work must be in same footprint as original structure or fill	Repair or replacement of any non-serviceable structures or fill, or repair or maintenance of serviceable fills with expansion of any amount up to 1 acre, or with a change in use.	Replacement of non-serviceable structures or fill or repair or maintenance of serviceable structure or fill with expansion greater than 1 acre.

6 Navigable Waters: waters that are subject to the ebb and flow of the tide and Federally designated navigable waters (Penobscott River to Medway, Kennebec River to Moosehead Lake, and the portion of Umbagog Lake in Maine).

7 Vegetated Shallows: subtidal areas that support rooted aquatic vegetation such as eelgrass.

	CATEGORY I	CATEGORY II	INDIVIDUAL PERMIT
(c) DREDGING	Maintenance dredging of less than 1,000 cy with upland disposal. -- Proper siltation controls used -- Limited to work between November 1 and January 15. -- No impact to special aquatic sites8	Maintenance dredging of greater than 1,000 cy, new dredging of up to 25,000 cy, or projects that do not meet Category I. Disposal includes upland, open water or beach nourishment (above mean high water), only if material is determined suitable.	Maintenance dredging (any amount) in or affecting special aquatic sites7. See B(a) above for dredge disposal in wetlands or water. New dredging greater than 25,000 cy or any amount in or affecting special aquatic sites7.
(d) MOORINGS	-- Private, non-commercial, non-rental single boat moorings not associated with any boating facility? provided not located in a Federal Navigation Project, there is no interference with navigation, it is not located in vegetated shallows6, and it is within ¼ mile of the owner's residence or a public access point[10]. -- Minor relocation or previously authorized mooring and moored floats consistent with Harbormaster recommendations, provided it is also consistent with local regulations, is not located in vegetated shallows, and does not interfere with navigation.	Moorings that do not meet the terms of Category I (e.g., rental or service moorings) and moorings that meet the terms of Category I that are located in a Federal anchorage.	Moorings within the horizontal limits, or with moored vessels that extend, into the horizontal limits of a Federal Navigation Project, except those in Federal anchorages under Category II.

8 Special Aquatic Sites: include wetlands and salt marsh, mudflats, riffles and pools, and vegetated shallows.

? Boating Facilities: facilities that provide, rent, or sell mooring space, such as marinas, yacht, clubs, boat clubs, boat yards, town facilities, dockominiums, etc.

[10] Cannot be at a remote location to create a convenient transient anchorage.

	CATEGORY I	CATEGORY II	INDIVIDUAL PERMIT
(e) PILE-SUPPORTED STRUCTURES AND FLOATS	Reconfiguration of existing authorized docks, provided structures are not positioned over vegetated shallows[6] or salt marsh and provided floats are supported off substrate at low tide. No dredging, addition slips or expansion allowed.	Private piers and floats for navigational access to waterway (seasonal and permanent).	Structures, piers or floats that extend, or with docked/moored vessels that extend, into the horizontal limits of a Federal Navigation Project. Structures, including piers and floats, associated with a new or previously unauthorized boating facility[8].
(f) MISCELLANEOUS	-- Temporary buoys, markers, floats, etc., for recreational use during specific events, provided they are removed within 30 days after use is discontinued. -- Coast Guard approved aids to navigation. -- Oil spill clean-up temporary structures or fill. -- Fish/wildlife harvesting structures/fill (as defined by 33 CFR 330, App. A-4) -- Scientific measurement devices and survey activities such as exploratory drilling, surveying or sampling. -- Shellfish seeding (brushing the flats) projects[11]. -- Does not include oil or gas exploration and fills for roads or construction pads. -- This category excludes work in National Wildlife Refuges.	-- Structures or work in or affecting tidal or navigable waters that are not defined under any or the previous headings. Includes, but is not limited to, utility lines, aerial transmission lines, pipelines, outfalls, boat ramps, bridge fills/abutments, etc. -- Shellfish/finfish (other than Atlantic salmon), or other aquaculture facilities which are consistent with the Corps revised standard siting requirements and standard permit conditions dated 7/6/94, or as revised.	If EIS required by Corps.

[11] Brushing the flats: the placement of tree boughs, wooden lath structures, or small-mesh fencing on mudflats for the purpose of enhancing recruitment of soft-shell clams (Mya arenaria).

Print the following 9 pages on plan sheet paper

STATE OF MAINE
DEPARTMENT OF TRANSPORTATION

HOULTON

AROOSTOOK

LUDLOW ROAD

11116.00

PROJECT LENGTH : 0.10 Miles

INTERSECTION AND APPROACH IMPOVEMENTS
CAPITAL IMPROVEMENT PROGRAM

PIN 11116.00

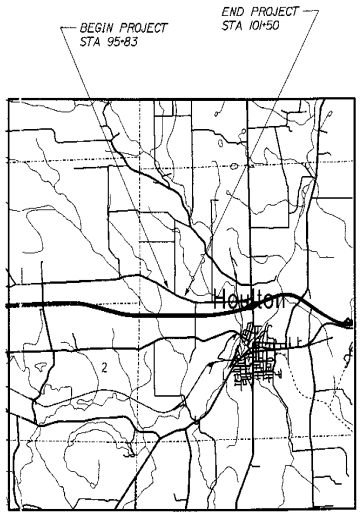

LOCATION MAP

2 0 2 4

Scale in Miles

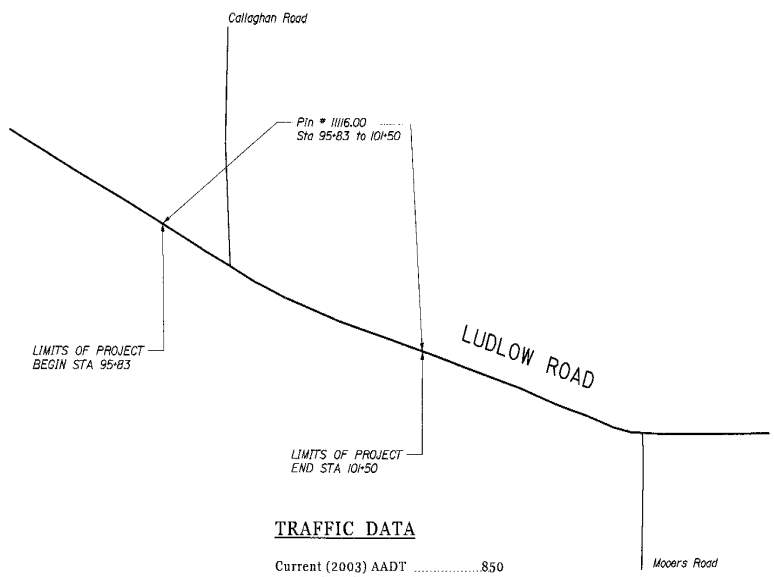

TRAFFIC DATA

Current (2003) AADT 850
Future (2016) AADT .....
DHV - % of AADT.....
Design Hour Volume.....
% Heavy Trucks (AADT).....
% Heavy Trucks (DHV).....
Directional Distribution (DHV).....
80 kN Equivalent P 2.0.....
80 kN Equivalent P 2.5.....
Design Speed (km/h).....

INDEX OF SHEETS

Description	Sheet No.
Title Sheet	1
Typical Section	2
Quantity Sheet	3
General Notes-Outline of Work	4
Plan Sheet	5
Cross - Sections	6-7-8
Right of Way Sheet	9

STATE OF MAINE
DEPARTMENT OF TRANSPORTATION
APPROVED
COMMISSIONER: DATE
CHIEF ENGINEER: 2/17/04

STATE OF MAINE
Brent Robert Bolduc
No. 6640
PROFESSIONAL ENGINEER

PROJECT INFORMATION
AROOSTOOK
PROGRAM
PROJECT MANAGER
DESIGNER
CONSULTANT
PROJECT RESIDENT
CONTRACTOR
PROJECT COMPLETION DATE
SIGNATURE
P.E. NUMBER 6640
DATE 2/13/04

PIN 011116.00

HOULTON
LUDLOW ROAD

TITLE SHEET

SHEET NUMBER
1
OF 9

Filename: ...\11116.00 Title Sheet.dgn Division: HIGHWAY Username: jean.tukey Date:2/11/2004

3" HOT BITUMINOUS PAVEMENT

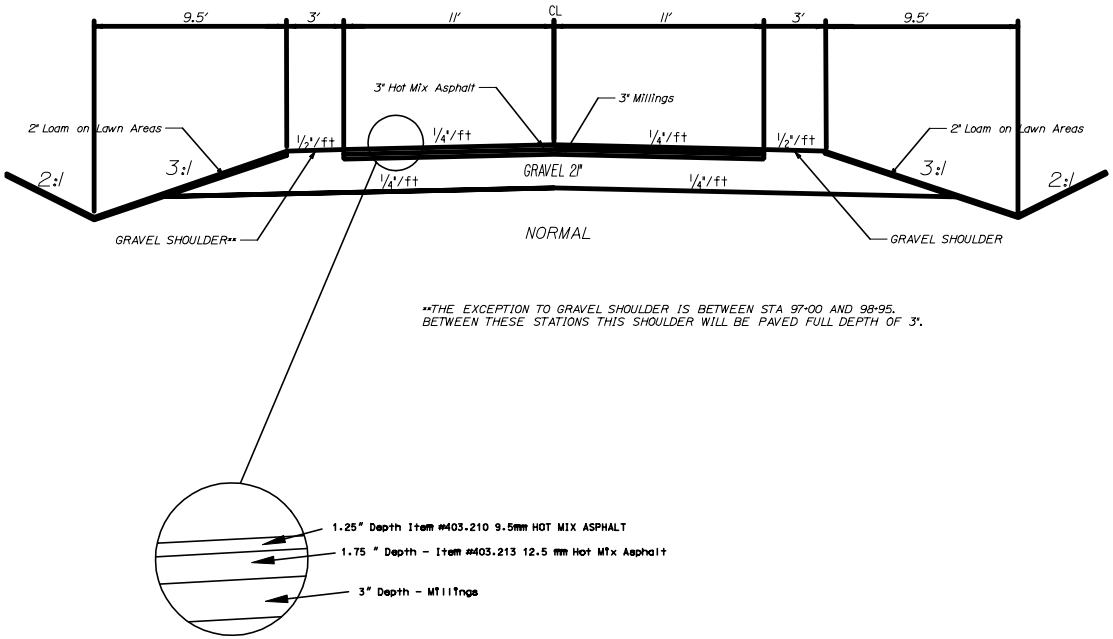

**THE EXCEPTION TO GRAVEL SHOULDER IS BETWEEN STA 97+00 AND 98+95. BETWEEN THESE STATIONS THIS SHOULDER WILL BE PAVED FULL DEPTH OF 3".

PROFILE OF UNDERCUT OF FROST SUSCEPTIBLE SOILS OVER LEDGE

CONDITION 1

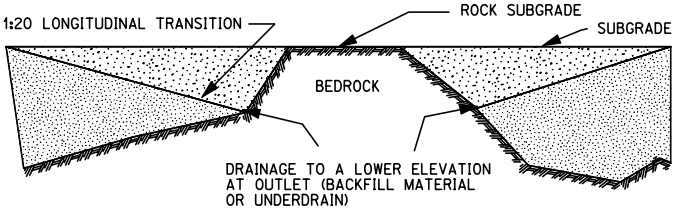

CONDITION 2

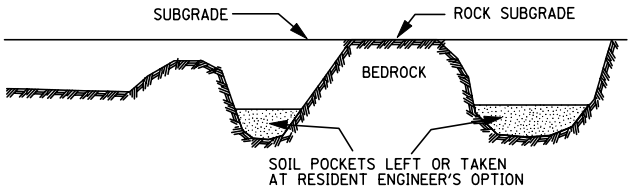

CONDITION 3

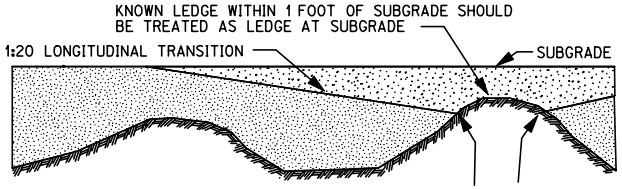

IF A SOIL SECTION BETWEEN LEDGE SUBGRADE IS OF SUCH LENGTH THAT THE TRANSITION FROM EACH EDGE WOULD MEET IT SHOULD BE TREATED AS AN EARTH POCKET

DRAINAGE TO A LOWER ELEVATION AT OUTLET (BACKFILL MATERIAL OR UNDERDRAIN)

FROST SUSCEPTIBLE SOIL TO BE UNDERCUT AND REPLACED WITH NON FROST SUSCEPTIBLE MATERIAL

FROST SUSCEPTIBLE SOIL

STATE OF MAINE
DEPARTMENT OF TRANSPORTATION

TYPICALS

HOULTON

Ludlow Road

IMPERIAL

1. All dimensions are in feet unless otherwise noted.
2. All elevations and stations are in feet.

REG. NO.	STATE	PROJECT NUMBER	NO.	SHEETS
1	MAINE	11116.00	3	9

ESTIMATED QUANTITIES

ITEM NO.	DESCRIPTION	QUANTITY	UNIT
203.220	UNCLASSIFIED EXCAVATION	1650	CY
205.510	WIDENING OF EXISTING SHOULDER	20	CY
206.070	STR ROCK EXC - DR & MINOR STR	60	CY
211.300	DITCH EXCAVATION	150	FT
304.100	AGGR SUBB COARSE- GRAVEL	1320	CY
403.209	HOT MIX ASPHALT 9.5 MM (INCIDENTAL)	10	T
403.210	HOT MIX ASPHALT 9.5 MM	110	T
403.213	HOT MIX ASPHALT 12.5 MM - BASE	130	T
409.150	BITUMINOUS TACK COAT APPLIED	40	FT
603.160	15 INCH CULVERT PIPE OPTION I	30	FT
605.050	6 INCH UNDERDRAIN TYPE B	420	FT
613.319	TEMPORARY EROSION CONTROL BLANKET	2060	SY
615.070	LOAM	15	CY
618.1301	SEEDING METHOD NUMBER 1 - PLAN QUANTITY	3	UN
618.1401	SEEDING METHOD NUMBER 2 - PLAN QUANTITY	12	UN
619.1201	MULCH - PLAN QUANTITY	15	UN
627.760	TEMPORARY PAVEMENT MARKING LINE, WHITE OR YELLOW	1	LS
629.050	HAND LABOR, STRAIGHT TIME	5	MH
631.100	AIR COMPRESSOR (INCLUDING OPERATOR)	5	HR
631.110	AIR TOOL (INCLUDING OPERATOR)	5	HR
631.120	ALL-PURPOSE EXCAVATOR (INCLUDING OPERATOR)	5	HR
631.172	TRUCK-LARGE (INCLUDING OPERATOR)	5	HR
652.380	FLAGGER	350	MH
652.390	WORK ZONE TRAFFIC CONTROL	1	LS
656.750	TEMP. SOIL EROSION AND WATER POLLUTION CONTROL PLAN	1	LS
659.100	MOBILIZATION	1	LS

SUMMARY OF EARTHWORK AND BORROW

UNCLASSIFIED EXCAVATION FOR ESTIMATE

UNCLASSIFIED EXCAVATION (FROM CROSS SECTIONS)	1445 CY	
EARTH FROM DRIVES	30 CY	
UNCERCUTS	155 CY	
GRUBBING IN FILL	16 CY	
LOAM SALVAGE IN FILL	0 CY	
ROCK EXCAVATION X SECT	0 CY	
DRAINAGE STRUCTURES	60 CY	
TOTAL UNCLASSIFIED EXCAVATION		1706 CY

FILL FOR BORROW CALCULATIONS

COMMON FILL (FROM CROSS SECTIONS)	0 CY	
FILL FOR DRIVES(included with above)		
GRUBBING IN FILL	16 CY	
TOTAL FILL NEEDED		16 CY

UNCLASSIFIED EXCAVATION FOR ESTIMATE

TOTAL COMMON EXCAVATION	1646 CY	
TOTAL ROCK EXCAVATION	60 CY	
TOTAL UNCLASSIFIED EXCAVATION		1706 CY

AVAILABLE UNCLASSIFIED EXCAVATION FOR BORROW CALCULATIONS

(1) TOTAL COMMON EXCAVATION		1646 CY
DEDUCTIONS:		
GRUBBING IN CUT	0 CY	
GRUBBING IN FILL	16 CY	
PAVEMENT SALVAGE	250 CY	
(2) TOTAL DEDUCTIONS		266 CY
TOTAL AVAILABLE NON-ROCK EXCAVATION (1) MINUS (2)		1380 CY

COMPUTATION OF WASTE STORAGE AND WASTE MATERIAL

GRUBBING IN CUT	0 CY	
GRUBBING IN FILL	16 CY	
TOTAL WASTE MATERIAL		16 CY

COMPUTATION OF COMMON BORROW FOR ESTIMATE

(3) TOTAL FILL		16 CY
TOTAL AVAILABLE NON-ROCK EXCAVATION	1380 CY x 0.85 = 1173 CY	
TOTAL AVAILABLE ROCK EXCAVATION		
TOTAL AVAILABLE STR. ROCK EXCAVATION	60 CY x 1.15 = 69 CY	
AVAILABLE WASTE MATERIAL OR WASTE STORAGE AREA		
(4) TOTAL AVAILABLE UNCLASSIFIED EXCAVATION		1242 CY
(5) SURPLUS AVAILABLE UNCLASSIFIED EXCAV. (4-3)		
TOTAL SURPLUS MATERIAL (OTHER THAN LOAM SALVAGE)		1226 CY

STATE OF MAINE
DEPARTMENT OF TRANSPORTATION

ESTIMATED QUANTITIES & EARTHWORK SUMMARY

HOULTON

Ludlow Road

1. UTILITIES INVOLVED IN THIS CONTRACT ARE:

HOULTON WATER COMPANY
VERIZON
HOULTON CABLE
MPS

ALL UTILITY FACILITIES SHALL BE ADJUSTED BY THE RESPECTIVE UTILITIES UNLESS NOTED.

2. GRUBBING WIDTH SHALL BE AS SHOWN ON THE PLANS UNLESS OTHERWISE AUTHORIZED BY THE ENGINEER. GRUBBING DEPTH HAS BEEN ESTIMATED AS 9 INCHES.

3. DRIVEWAY FILL SIDESLOPES SHALL BE THE SAME AS THE NON-GUARDRAIL FILL SLOPES UNLESS OTHERWISE NOTED ON THE PLANS.

4. IF FOUNDATION MATERIAL IS REQUIRED UNDER CULVERTS, IT SHALL MEET THE REQUIREMENTS FOR GRANULAR BORROW-UNDERWATER BACKFILL AND WILL BE PAID FOR AS GRANULAR BORROW.

5. PAVED ENTRANCES SHALL BE CONSTRUCTED WITH:

2" ITEM 403.209 HOT MIX ASPHALT
12 INCHES AGGREGATE SUBBASE COURSE GRAVEL(INCLUDES 3" PAVEMENT SALVAGE)

6. UNPAVED ENTRANCES SHALL BE CONSTRUCTED WITH:

14 INCHES AGGREGATE SUBBASE COURSE GRAVEL

7. A 3 FOOT PAVED LIP SHALL BE PLACED AT ALL GRAVEL ENTRANCES.

8. NO EXISTING DRAINAGE SHALL BE ABANDONED, REMOVED, OR PLUGGED WITHOUT PRIOR APPROVAL OF THE ENGINEER.

9. THE CULVERT SIZES SHOWN ON THE PLANS AND CROSS SECTIONS ARE FOR SMOOTHLINED PIPES, FOR COMPARABLE CORRUGATED SIZES, SEE THE DRAINAGE TABULATION.

10. ALL DITCH ELEVATIONS SHOWN ON THE CROSS SECTIONS ARE FOR THE FINISHED DITCH FLOW LINE.

11. EXISTING LIVE PASTURAGE SHALL BE MAINTAINED DURING ALL PHASES OF CONSTRUCTION AS DIRECTED BY THE ENGINEER.

12. LOAM HAS BEEN ESTIMATED FOR LAWN AREAS WHICH WILL RECEIVE METHOD # 1 SEED. ACTUAL PLACEMENT OF THE LOAM SHALL BE AS DESIGNATED BY THE ENGINEER.

13. UNLESS OTHERWISE NOTED SEEDING METHOD #1 SHALL BE UTILIZED ON ALL LAWNS AND DEVELOPED AREAS;SEEDING METHOD #2 SHALL BE UTILIZED ON ALL OTHER AREAS.

14. ONLY CELLULOSE FIBER MULCH SHALL BE APPLIED TO METHOD #1 LAWN AREAS. CELLULOSE OR HAY MULCH CAN BE APPLIED TO METHOD #2 AREAS.

15. LOAM SHALL BE PLACED TO A NOMINAL DEPTH OF 2 INCHES FOR METHOD #1 UNLESS OTHERWISE NOTED OR DIRECTED.

16. THE REMOVAL OF THE EXISTING DRAINAGE PIPES NOTED REMOVE ON THE PLANS WILL NOT BE PAID FOR DIRECTLY AND WILL BE CONSIDERED AS INCIDENTAL TO RELATED DRAINAGE ITEMS.

17. EXCAVATION REQUIRED ON THIS PROJECT, OTHER THAN STRUCTURAL EXCAVATION, WILL BE PAID UNDER ITEM 203.22, UNCLASSIFIED EXCAVATION, DUE TO SIGNIFICANT VARIABILITY IN THE DEPTH AND QUALITY OF BEDROCK. UNDERCUTS AT ANTICIPATED BEDROCK TRANSITIONS ARE SHOWN ON THE PROFILES, BUT SHOULD NOT BE CONSIDERED TO BE THE ONLY LOCATIONS WHERE UNDERCUTS MAY BE REQUIRED. DUE TO THE VARIABILITY OF BEDROCK, UNDERCUT QUANTITIES HAVE NOT BEEN CALCULATED FROM THE CROSS SECTIONS. AN ALLOWANCE OF 155 CY HAS BEEN INCLUDED IN THE ITEM 203.22 QUANTITY FOR POSSIBLE UNDERCUTS.

18. ESTIMATED QUANTITIES FOR REQUIRED STRUCTURAL EARTH EXCAVATION, DRAINAGE AND MINOR STRUCTURES ARE INFORMATIONAL ONLY AND REPRESENT THE APPROXIMATE MINIMUM QUANTITY REQUIRED TO INSTALL DRAINAGE STRUCTURES. ADDITIONAL EXCAVATION FOR THE CONTRACTOR'S CONVENIENCE OR TO COMPLY WITH BACKSLOPING REQUIREMENTS WILL NOT BE PAID FOR DIRECTLY BUT WILL BE CONSIDERED INCIDENTAL TO THE RELATED DRAINAGE ITEMS.

OUTLINE OF WORK

PROJECT BEGINS STA 95+83 , ENDS AT STA 101+50.

FULL CONSTRUCTION FROM STA 97+00 TO 101+50.

6 INCH UNDERDRAIN CONNECTS TO EXISTING CROSSPIPE AT STA 95+83. CONNECTION TO EXISTING PIPE INCIDENTAL TO INSTALLATION OF UNDERDRAIN

INSTALL DRIVE CULVERT AT STA 98+00 RIGHT

PAVE 22' WIDE WITH 1-3/4" OF 12.5MM HMA BASE STA 97+00 TO 101+50
PAVE 22' WIDE WITH 1-1/4" OF 9.5MM HMA SURFACE 97+00 TO 101+50
PAVE BASE & SURFACE ON LEFT SHOULDER STA 97+00 TO 98+95

POSSIBLE FROST TRANSITION UNDERCUT AT STA 98+50 TO 100+50

STATE OF MAINE
DEPARTMENT OF TRANSPORTATION

GENERAL NOTES & OUTLINE OF WORK

HOULTON

Ludlow Road

R.P.W. REG. NO.	STATE	PROJECT NUMBER	SHEET NO.	TOTAL SHEETS
1	MAINE	1111600	5	9

PLAN

DONALD A.
DOROTHY H.
FITZPATRICK

ANGLE POINT 95+00
0°-14'-RT

PC 96+00.66

CALLAGHAN RD 11 48'-00'-12"E

CARL A. / MARY H. GRANT

P.I. STA. 100+00
Δ 7°-58'-26" LT
D 1°-00'-00"
R 5729.578'
L 797.39'
T 399.339'
E 13.9'

95+83 TO 100+00 LT
INSTALL TYPE "B"
UNDERDRAIN
75' RADIUS

WELL HOUSE

2 STY WF

PVD. DRIVE

LAWN

CULT FIELD

THOMAS J ANDERSON
(TRUSTEE)

END PROJECT 101+50

S41°-11'-00"E

96 97 98 99 100 101 102

DONALD A.
DOROTHY H.
FITZPATRICK

95+36
INSTALL 18"x30'
OPT 1

CULT. FIELD
95+83 BEGIN PROJECT

97+00 BEGIN FULL CONST.

98+00
INSTALL 15"x30' OPT 1

LEIGH A. / THERESA L. LONG

FIELD

LAWN

TREES / BUSHES

PROFILE

CENTERLINE PROFILE - CALLAGHAN ROAD @ 97+62

440
430

12+0 11+0 10+0

300' VC

-1.65 %

+1.66%

FINISH

EXISTING

+0.2%

97+62.00 +1.66%

SUBGRADE

ASSUMED LEDGE LINE

20:1 TRANSITION

POSSIBLE FROST TRANSITION

PVT 97+50
433.00

101+25

PVT 102+25
440.833

400' VC
1.89' EXT
374' SSD

94 95 96 97 98 99 100 101 102

432.70 432.86 433.14 433.54 434.07 434.71 435.48 436.31 437.16 437.90 438.48 438.82 439.00

LUDLOW RD. 1111A.00 HOULTON

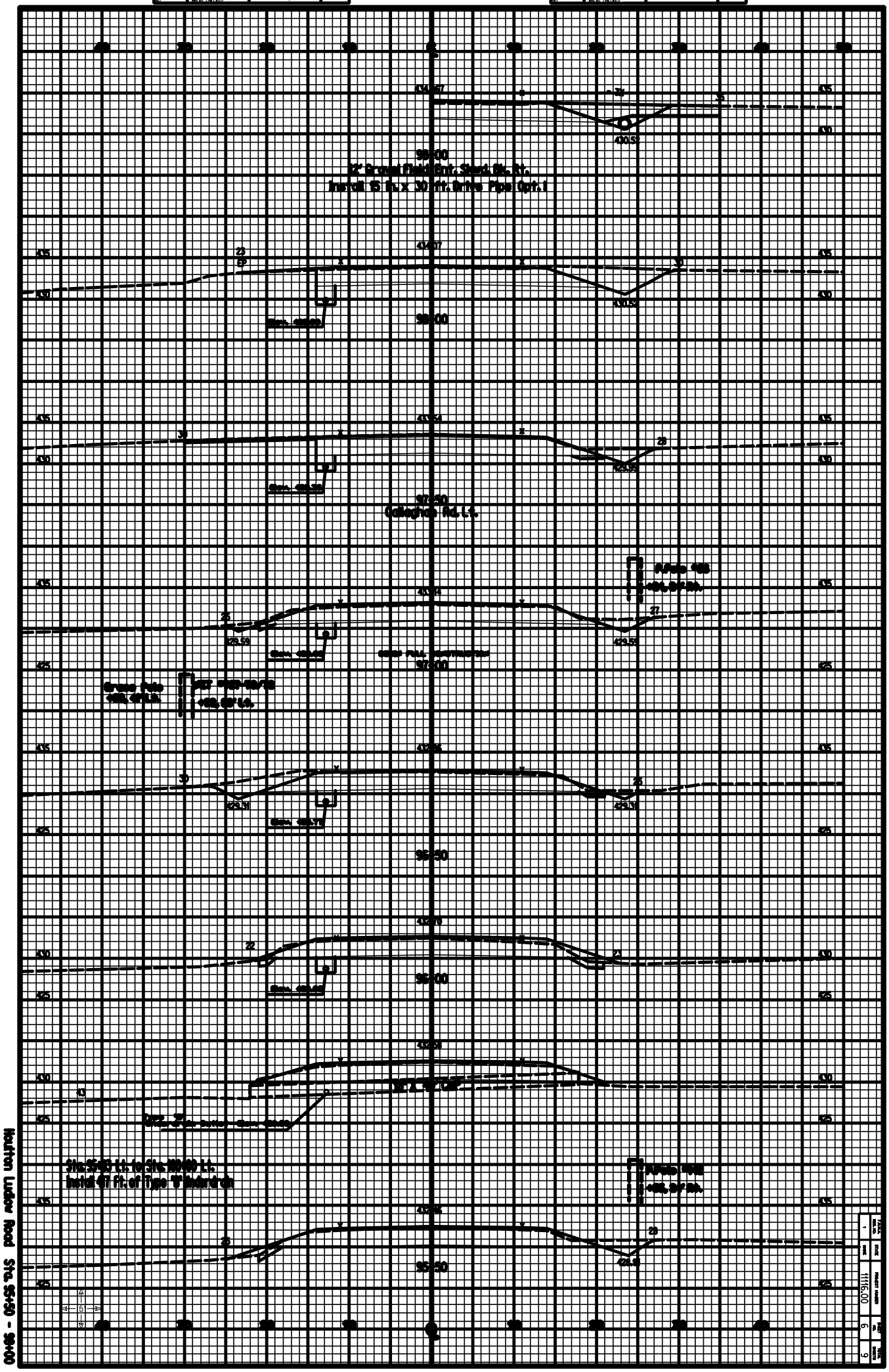
Houlton Ludlow Road Sta. 95+50 - 99+00
98+00
12" Gravel Field Ent. Stand. Rt. Rt.
Install 15 in. x 30 ft. Drive Pipe Opt. I
97+50
Gallagher Rd. L.t.
97+00
96+50
96+00
95+50
Sta. 95+50 Lt. to Sta. 99+00 Lt.
Install 67 ft. of Type 'B' Underdrain
1116.00

Houlton Ludlow Road Sta. 98+50 - 104+00

104+50

Bridge Pole +10.23' Rt.

Bridge Pole +10.23' Rt.

435.2

104+00

431.10

431.15

100+50

431.14

431.88

Bridge Pole +10.23' Rt.

Bridge Pole +10.23' Rt.

Elev. 430.88

100+00

430.31

432.16

Elev. 430.31

99+50

435.07

99+20

12" Paved Drive Shed Sk. Lt.

435.75

431.83

Elev. 430.44

99+00

435.01

99+75

House 44' Lt. Sill = 436.2'

Bridge Pole +10.23' Rt.

431.52

Elev. 430.79

99+50

Sta. 98+50 Lt. to Sta. 100+00 Lt.
Install 48 Lf. of Type "F" Underdrain

1							

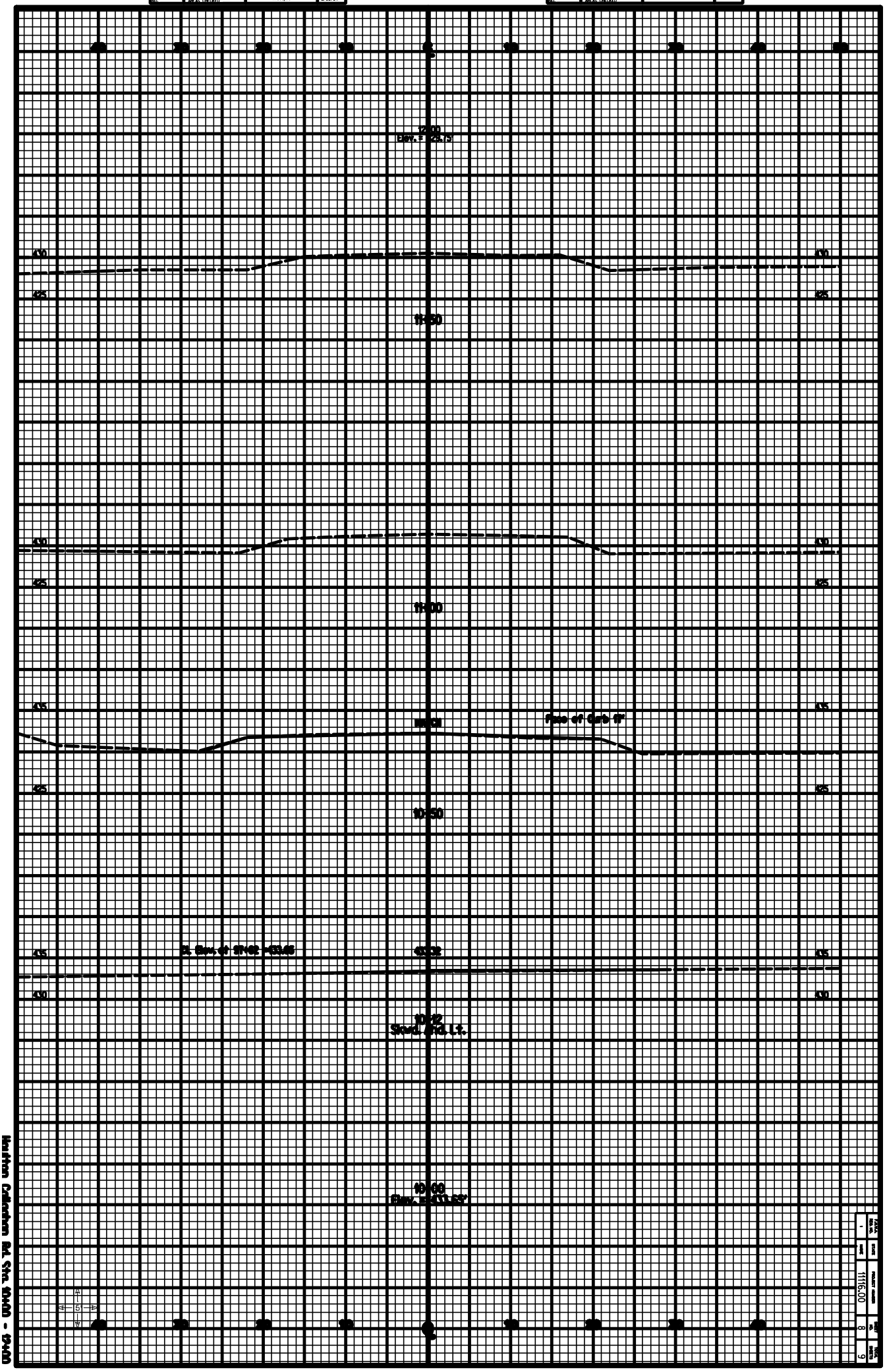
12:00
Elev. = 425.5'
430
425
11:50
430
425
11:00
435
Face of Curb 8"
425
10:50
435
Elev. of SHGL = 423.46
425
430
10:12
Shwd. Rd. Lt.
10:00
Elev. = 420.55'
435
430
425
Hatton Collection Rd. Sta. 10+00 - 19+00

ITEM	TECH	CHECKED
BASE MAP	DIV.1	
EXIST. R/W	DIV.1	
PROP. LINES	DIV.1	
AREAS	DIV.1	

REVISIONS			
NO.	DATE	DESCRIPTION	BY

THIS PLAN WAS PREPARED IN CONNECTION WITH THE DEPARTMENT'S ACQUISITION OF REAL PROPERTY FOR TRANSPORTATION PURPOSES. IT CANNOT BE USED OR RELIED UPON TO ESTABLISH LEGAL BOUNDARIES BETWEEN ABUTTING PROPERTY OWNERS.

F.H.W.A. REG. NO.	STATE	PROJECT NUMBER	SHEET NO.	TOTAL SHEETS
1	MAINE	11116.00	9	9

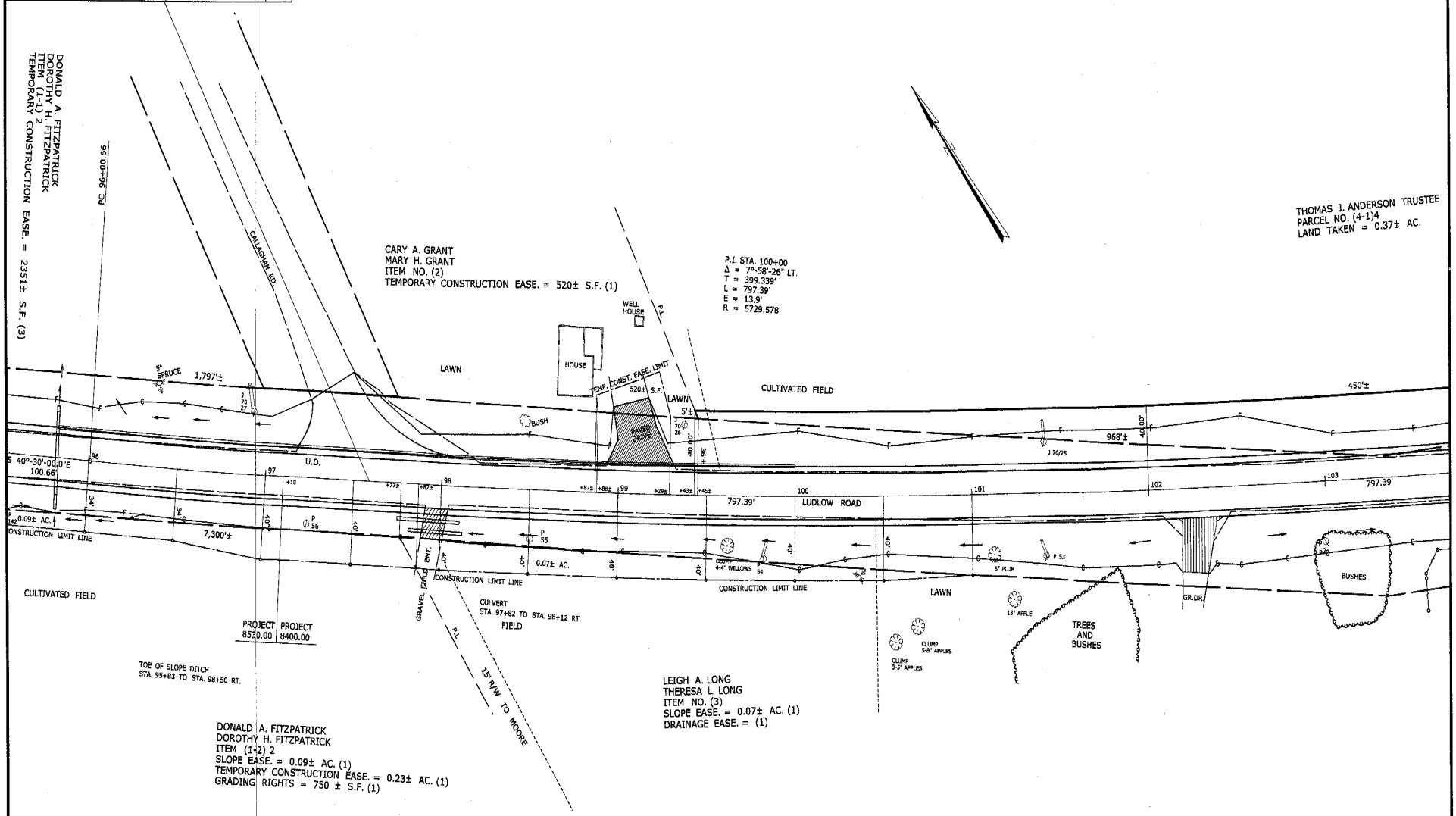

STATE OF MAINE
REGISTRY OF DEEDS

COUNTY _____
RECEIVED _____
at ____h____m____ M and recorded in
Plan Book _____, Page _____
Attest: _____
REGISTER

PLAN FILED IN PLAN BOOK	PAGE

COUNTY RECORD				
NO.	GRANTOR	INSTRUMENT COND.	DATE	BOOK	PAGE
			04-05-2002	3945	044

RIGHT OF WAY REFERENCE

AROOSTOOK COUNTY
BOOK 1 , PAGE 40-41
4 RODS (66')

STATE OF MAINE
JOHN E. DORITY
2098
REGISTERED
PROFESSIONAL ENGINEER
01/09/04

SYMBOLS
IP (IRON PIPE or PIN)
S.T. (SEPTIC TANK)
WATER LINE
GAS LINE
ELECTRIC LINE
TELEPHONE LINE
SEWER LINE
PROPERTY LINE
LIMITS OF WRCUGHT PORTION
EXISTING RIGHT OF WAY
NEW RIGHT OF WAY
NEW RIGHT OF WAY WITHIN EXISTING RIGHT OF WAY
CONTROL OF ACCESS

○ - RAILROAD SPIKE △ - CONTROL MONUMENTS

MAINE DEPARTMENT OF TRANSPORTATION - CENTERLINE CONTROL

MAINE STATE COORDINATE SYSTEM - ZONE

CENTERLINE CONTROL MONUMENTS			TRAVERSE CONTROL POINTS		
STATION	NORTH	EAST	NUMBER	NORTH	EAST

P.I.N. 8400.00 & 008530.00

STATE OF MAINE
DEPARTMENT OF TRANSPORTATION
16 STATE HOUSE STATION - AUGUSTA, ME 04333-0016
RIGHT OF WAY MAP

STATE AID HIGHWAY NO. 4

HOULTON AROOSTOOK COUNTY
STATE PROJECT NO'S. 8400.00 & 8530.00

DATE: MAY 2001

SCALE: 1 = 50'

SHEET NO. 3 OF 10 SHEETS

D.O.T. FILE NO. 2 - 474

JOHN G. MELROSE
COMMISSIONER

JOHN E. DORITY
CHIEF ENGINEER