January 30, 2004
Supersedes October 15, 2003

BEFORE SUBMITTING YOUR BID

1. **Use pen and ink to complete the Bid.**

2. **Have you signed and completed the Contract Agreement, Offer & Award Forms?**

3. **As a minimum, the Bidder will submit a Bid Package consisting of the Notice to Contractors, the completed Acknowledgement of Bid Amendments & Submission of Bid Bond Validation Number form, the completed Schedule of Items, 2 copies of the completed Agreement, Offer, & Award form, a Bid Bond or Bid Guarantee, and any other Certifications or Bid Requirements listed in the Bid Book.**

4. **Have you included prices for all Bid Items? ("Zero is not considered a bid price.")**

5. **Have you included a bid guarantee? Acceptable forms are:**

   A. **Bid Bond on the Department's prescribed form for 5% of the Bid Amount. (Or forms that do not contain any significant variations from the Department's forms as solely determined by the Department.)**

   B. **Official Bank Check, Cashier's Check, Certified Check, U.S. Postal Money Order or Negotiable Certificate of Deposit in the amount stated in the Notice to Contractors.**

6. **If the written Bid is to be sent, Federal Express overnight delivery is suggested as the package is delivered directly to the DOT Headquarters Building in Augusta. Other means, such as U.S. Postal Services' Express Mail has proven not to be reliable.**

AND FOR FEDERAL AID PROJECTS

7. **Have you included your DBE Utilization commitment in the proper amounts and signed the DBE Certification?**

If you need further information regarding Bid preparation, call the DOT Contracts Section at (207)624-3410.

For complete specifications regarding bidding requirements, refer to Section 102 of the Maine Department of Transportation, Standard Specifications, Revision December 2002.

January 30, 2004
Supercedes February 11, 2003

NOTICE

The Maine Department of Transportation is attempting to improve the way Bid Amendments/Addendums are handled, and allow for an electronic downloading of bid packages from our website, while continuing to maintain a planholders list.

Prospective bidders, subcontractors or suppliers who wish to download a copy of the bid package and receive a courtesy notification of project specific bid amendments, must provide an email address to Diane Barnes at the MDOT Contracts mailbox at: MDOT.contracts@maine.gov. Each bid package will require a separate request.

Additionally, interested parties will be responsible for reviewing and retrieving the Bid Amendments from our web site, and acknowledging receipt and incorporating those Bid Amendments in their bids using the Acknowledgement of Bid Amendment Form.

The downloading of bid packages from the MDOT website is not the same as providing an electronic bid to the Department. Electronic bids must be submitted via **http://www.BIDX.com**. For information on electronic bidding contract Rebecca Pooler at **rebecca.pooler@maine.gov**.

NOTICE

For security and other reasons, all Bid Packages which are mailed, shall be provided in double (one envelope inside the other) envelopes. The *Inner Envelope* shall have the following information provided on it:

Bid Enclosed - Do Not Open
PIN:
Town:
Date of Bid Opening:
Name of Contractor with mailing address and telephone number:

In Addition to the usual address information, the *Outer Envelope* should have written or typed on it:

Double Envelope: Bid Enclosed
PIN:
Town:
Date of Bid Opening:
Name of Contractor:
This should not be much of a change for those of you who use Federal Express or similar services.

Hand-carried Bids may be in one envelope as before, and should be marked with the following infrormation:

Bid Enclosed: Do Not Open
PIN:
Town:
Name of Contractor:

STATE OF MAINE DEPARTMENT OF TRANSPORTATION

Bid Guaranty-Bid Bond Form

KNOW ALL MEN BY THESE PRESENTS THAT_____

_____, of the City/Town of _____and State of_____

as Principal, and _____as Surety, a

Corporation duly organized under the laws of the State of_____and having a usual place of

Business in _____and hereby held and firmly bound unto the Treasurer of

the State of Maine in the sum of_____,for payment which Principal and Surety bind

themselves, their heirs, executers, administrators, successors and assigns, jointly and severally.

The condition of this obligation is that the Principal has submitted to the Maine Department of Transportation, hereafter Department, a certain bid, attached hereto and incorporated as a part herein, to enter into a written contract for the construction of _____

_____

_____and if the Department shall accept said bid and the Principal shall execute and deliver a contract in the form attached hereto (properly completed in accordance with said bid) and shall furnish bonds for this faithful performance of said contract, and for the payment of all persons performing labor or furnishing material in connection therewith, and shall in all other respects perform the agreement created by the acceptance of said bid, then this obligation shall be null and void; otherwise it shall remain in full force, and effect.

Signed and sealed this_____day of _____20_____

WITNESS:

_____

_____

_____

WITNESS

_____

_____

_____

PRINCIPAL:

By_____

By:_____

By:_____

SURETY:

By_____

By:_____

Name of Local Agency: _____

SAMPLE

NOTICE

Bidders:

Please use the attached “Request for Information” form when faxing questions and comments concerning specific Contracts that have been Advertised for Bid. Include additional numbered pages as required.

State of Maine
Department of Transportation

REQUEST FOR INFORMATION

Date _____ Time _____

Information Requested: **PIN:** _____ **Town(s):** _____

_____

_____

_____

_____

_____

_____

_____

_____

_____

_____

_____

_____

Request by: _____ **Phone: (_____)**_____
Bid Date: _____ **Fax: (_____)**_____

Complete top portion of form and transmit to the number listed in the Notice to Contractors

RFI No: _____ **RFI received:** _____

Response:_____

_____

_____

_____

_____

_____

_____

_____

_____

_____

_____

Response By:_____ Date: _____

INSTRUCTIONS FOR PREPARING THE CONTRACTOR'S DISADVANTAGED BUSINESS ENTERPRISE UTILIZATION PLAN

The Contractor Shall:

1. Submit a completed Contractor's Disadvantaged Business Enterprise Utilization Plan to the Contract's Engineer by 4:30 P.M. on the Bid day.

2. Extend equal opportunity to MDOT certified DBE firms (as listed in MDOT's DBE Directory of Certified Businesses) in the selection and utilization of Subcontractors and Suppliers.

SPECIFIC INSTRUCTIONS FOR COMPLETING THE FORM:

Insert Contractor name, the name of the person(s) preparing the form, and that person(s) telephone and fax number.

Provide total Bid price, Federal Project Identification Number, and location of the Project work.

In the columns, name each DBE firm to be used, provide the Unit or Item cost of the Work/Product to be provided by the DBE firm, give a brief description of the Work, and the dollar value of the Work.

If no DBE firm is to be utilized, the Contractor must document the reason(s) why no DBE firms are being used. Specific supporting evidence of good faith efforts taken by Contractors to solicit DBE Bidders must be attached. This evidence, as a minimum, includes phone logs, e-mail and/or mail DBE solicitation records, and the documented results of these solicitations.

NOTICE

Disadvantaged Business Enterprise Proposed Utilization

The Apparent Low Bidder must submit the Disadvantaged Business Enterprise Proposed Utilization form by close of Business (4:30 P.M.) on Bid day.

The Contractor's Disadvantaged Business Enterprise Proposed Utilization Plan form contains additional information that is required by USDOT.

The Contractor's Disadvantaged Business Enterprise Proposed Utilization Plan form must be used.

A copy of the new Contractor's Disadvantaged Business Enterprise Proposed Utilization Plan and instructions for completing it are attached.

Note: Questions about DBE firms, or to obtain a printed copy of the DBE Directory, contact Equal Opportunity at (207) 624-3066.

MDOTs DBE Directory of Certified firms can also be obtained at http://www.state.me.us/mdot/humnres/o_equalo/cdwbed_h.htm

CONTRACTOR'S DISADVANTAGED BUSINESS ENTERPRISE PROPOSED UTILIZATION PLAN

Low Bidder shall furnish completed form to Contracts Section by 4:30 P.M. on Bid Opening day.

TO: MDOT Contracts Section
16 State House Station,
Augusta, Me 04333-0016
or
Fax: 207-624-3431

Contractor: _____
Prepared by: _____

Telephone: _____ Fax: _____

BID PRICE: $_____FEDERAL PROJECT #_____LOCATION: _____

TOTAL DBE PARTICIPATION AS A PERCENT OF TOTAL BID PRICE = _____%

DBE Firm*	Unit/Item Cost	Unit #	Description of work & Item Number	Actual $ Value
			Total >	

If no DBE firm(s) are used, bidder must document efforts made to secure DBE participation and attach supporting evidence of this effort:
_____
_____.

Examples: Bidder relies wholly upon low quote subcontractor section, DBE firm(s) were not low quote. No DBE firms bid.

***Only DBE firms certified by MDOT prior to bidding can be utilized by Contractor for DBE credit. Directory of certified DBEs is available on MDOT's website: www.state.me.us/mdot**

Equal Opportunity Use:

Plan received ___/___/___ Verified by: _____ Action: _____

Office of Human Resources

Equal Opportunity

MAINE DEPARTMENT OF TRANSPORTATION

Certified Disadvantaged and Women Business Enterprise

DBE DIRECTORY - MINORITY OWNED

WBE DIRECTORY - WOMEN OWNED

WEBSITE FOR DIRECTORY CAN BE FOUND AT:
http://www.state.me.us/mdot/humnres/o_equalo/cdwbed_h.htm

It is the responsibility of the Contractor to access the DBE Directory at this site in order to have the most current listings.

STATE OF MAINE DEPARTMENT OF TRANSPORTATION
NOTICE TO CONTRACTORS

Sealed Bids addressed to the Maine Department of Transportation, Augusta, Maine 04333 and endorsed on the wrapper "Bid for the Hot Mix Asphalt Overlay, Milling, Full Depth Recycled Pavement with Foamed Asphalt, Drainage and Safety Improvements in the towns of **Fort Kent, St Francis and St John Plt**" will be received from contractors at the Reception Desk, Maine DOT Building, Child Street, Augusta Maine, until 11 00 o'clock A M (prevailing time) on May 5, 2004 and at that time and place publicly opened and read Bids will be accepted from contractors prequalified by the Department of Transportation for highway construction or paving projects All other Bids may be rejected **MDOT provides the option of electronic bidding We accept electronic bids for those bid packages posted on the bidx com website Electronic bids do not have to be accompanied by paper bids Please note the Department will accept a facsimile of the bid bond, however, the original bid bond must then be received at the MDOT Contract Section within 72 hours of the bid opening Until further notice, dual bids (one paper, one electronic) will be accepted, with the paper copy taking precedence**

Description Maine Federal Aid Project Nos STP-1125(600)X, PIN 11256 00, STP-1125(700)X, PIN 11257 00, STP-1125(800)X, PIN 11258 00, STP-1125(900)X, PIN 11259 00, STP-1132(400)X, PIN 11324 00, STP-1132(500)X, PIN 11325 00, STP-1217(300)X, PIN 12173 00

Location In Aroostook County, on Rte 161 project STP-1125(600)X begins in St Francis, 0 14 of a mile easterly of the St John Plt town line and extends westerly 0 77 of a mile to the Cottage Road, STP-1125(700)X begins at the Cottage Rd and extends westerly 1 2 miles, STP-1125(800)X begins in St John Plt, 1 54 miles westerly of the Dump Rd and extends westerly 0 32 of a mile, ending in St Francis STP-1125(900)X located on Rte 161 in St John Plt, beginning 0 46 of a mile easterly of the Dump Rd and extending westerly 2 0 miles In Fort Kent, STP-1132(400)X is located on Rte 1, beginning 0 09 of a mile northerly of Des Jardin St and extending northerly 0 78 of a mile and STP-1132(500)X is located on Rte 1, beginning at the southerly end of Fish River Bridge and extending northerly 0 61 of a mile STP-1217(300)X is Guardrail Improvements In St Francis and St John Plt

Outline of Work Hot Mix Asphalt Overly, Milling, Full Depth Recycled Pavement with Foamed Asphalt, Drainage and Safety Improvements, and other incidental work

For general information regarding Bidding and Contracting procedures, contact Scott Bickford at (207)624-3410 Our webpage at http //www state me us/mdot/project/design/homepg htm contains a copy of the schedule of items, Plan Holders List, written portions of bid amendments (not drawings), and bid results For Project-specific information fax all questions to **James Andrews** at (207)624-3401 Questions received after 12 00 noon of Monday prior to bid date will not be answered Bidders shall not contact any other Departmental staff for clarification of Contract provisions, and the Department will not be responsible for any interpretations so obtained Hearing impaired persons may call the Telecommunication Device for the Deaf at (207) 624-3007

Specifications and bid forms may be seen at the Maine DOT Building in Augusta, Maine and at the Department of Transportation's Division Office in Presque Isle They may be purchased from the Department between the hours of 8 00 a m to 4 30 p m by cash, credit card (Visa/Mastercard) or check payable to Treasurer, State of Maine sent to Maine Department of Transportation, Attn Mailroom, 16 State House Station, Augusta, Maine 04333-0016 They also may be purchased by telephone at (207)624-3536 between the hours of 8 00 a m to 4 30 p m Bid Book $10 ($13 by mail), Single Sheets $2, payment in advance, all non-refundable

Each Bid must be made upon blank forms provided by the Department and must be accompanied by a bid bond at 5% of the bid amount or an official bank check, cashier's check, certified check, certificate of deposit, or United States postal money order in the amount of $40,000 payable to Treasurer, State of Maine as a Bid guarantee A Contract Performance Surety Bond and a Contract Payment Surety Bond, each in the amount of 100 percent of the Contract price, will be required of the successful Bidder

This Contract is subject to all applicable Federal Laws This contract is subject to compliance with the Disadvantaged Business Enterprise program requirements as set forth by the Maine Department of Transportation

All work shall be governed by "State of Maine, Department of Transportation, Standard Specifications, Revision of December 2002", price $10 [$13 by mail], and Standard Details, Revision of December 2002, price $20 [$25 by mail] Standard Detail updates can be found at http //www state me us/mdot/project/design/homepg htm

The right is hereby reserved to the MDOT to reject any or all Bids

Augusta, Maine
Date April 14, 2004

STATE OF MAINE
JOHN E DORITY
No 2093
REGISTERED PROFESSIONAL ENGINEER

JOHN E DORITY
CHIEF ENGINEER

SPECIAL PROVISION 102.7.3
ACKNOWLEDGMENT OF BID AMENDMENTS
&
SUBMISSION OF BID BOND VALIDATION NUMBER (IF APPLICABLE)

With this form, the Bidder acknowledges its responsibility to check for all Amendments to the Bid Package. For each Project under Advertisement, Amendments are located at http://www.maine.gov/mdot/comprehensive-list-projects/project-information.php It is the responsibility of the Bidder to determine if there are Amendments to the Project, to download them, to incorporate them into their Bid Package, and to reference the Amendment number and the date on the form below. The Maine DOT will not post Bid Amendments any later than noon the day before Bid opening without individually notifying all the planholders.

Amendment Number	Date

The Contractor, for itself, its successors and assigns, hereby acknowledges that it has received all of the above referenced Amendments to the Bid Package.

CONTRACTOR

_____
Date

_____
Signature of authorized representative

_____
(Name and Title Printed)

MAINE DEPARTMENT OF TRANSPORTATION

BID

DATE OF OPENING : CALL ORDER :

CONTRACT ID : 011256.00

PROJECTS

STP-1125(600)X
STP-1125(700)X
STP-1125(800)X
OTHERS

COUNTY : AROOSTOOK

CONTRACT ID: 011256.00 PROJECT(S): STP-1125(600)X
STP-1125(700)X
STP-1125(800)X
OTHERS

CONTRACTOR :_____

LINE NO	ITEM DESCRIPTION	APPROX. QUANTITY AND UNITS	UNIT PRICE DOLLARS	UNIT PRICE CTS	BID AMOUNT DOLLARS	BID AMOUNT CTS
SECTION 0001 HIGHWAY ITEMS						
0010	201.23 REMOVING SINGLE TREE TOP ONLY	9.000 EA				
0020	201.24 REMOVING STUMP	9.000 EA				
0030	202.202 REMOVING PAVEMENT SURFACE	10430.000 SY				
0040	202.203 PAVEMENT BUTT JOINTS	910.000 SY				
0050	203.20 COMMON EXCAVATION	340.000 CY				
0060	204.21 ADD SHOULDER AGGREGATE - TRUCK MEASURE	790.000 CY				
0070	204.41 REHABILITATION OF EXISTING SHOULDERS, PLAN QUANTITY	1940.000 SY				
0080	211.20 INSLOPE EXCAVATION	11300.000 LF				
0090	211.22 INSLOPE EXCAVATION - GUARDRAIL	900.000 LF				

CONTRACT ID: 011256.00 PROJECT(S): STP-1125(600)X
STP-1125(700)X
STP-1125(800)X
OTHERS

CONTRACTOR :_____

LINE NO	ITEM DESCRIPTION	APPROX. QUANTITY AND UNITS	UNIT PRICE DOLLARS	UNIT PRICE CTS	BID AMOUNT DOLLARS	BID AMOUNT CTS
0100	211.30 DITCH EXCAVATION	8830.000 LF				
0110	304.103 AGGREGATE SUBBASE - GRAVEL (TRUCK MEASURE)	640.000 CY				
0120	309.36 FULL DEPTH REC PAVEMENT W/FOAM ASPHALT 6 INCH DEPTH	31180.000 SY				
0130	403.209 HOT MIX ASPHALT 9.5 MM HMA (SIDEWALKS, DRIVES, INCIDENT ALS)	320.000 T				
0140	403.210 HOT MIX ASPHALT 9.5 MM HMA	7950.000 T				
0150	403.211 HOT MIX ASPHALT (SHIMMING)	2080.000 T				
0160	409.15 BITUMINOUS TACK COAT APPLIED	3040.000 G				
0170	411.10 UNTREATED AGGREGATE SURFACE COURSE (TRUCK MEASURE)	1610.000 CY				
0180	411.12 CRUSHED STONE SURFACE	10.000 T				
0190	603.16 15 INCH CULVERT PIPE OPTION I	644.000 LF				

CONTRACT ID: 011256.00 PROJECT(S): STP-1125(600)X
STP-1125(700)X
STP-1125(800)X
OTHERS

CONTRACTOR :_____

LINE NO	ITEM DESCRIPTION	APPROX. QUANTITY AND UNITS	UNIT PRICE DOLLARS	UNIT PRICE CTS	BID AMOUNT DOLLARS	BID AMOUNT CTS
0200	603.17 18 INCH CULVERT PIPE OPTION I	510.000 LF				
0210	603.171 18 INCH CORRUGATED METAL PIPE	14.000 LF				
0220	603.179 18 INCH CULVERT PIPE OPTION III	194.000 LF				
0230	603.199 24 INCH CULVERT PIPE OPTION III	322.000 LF				
0240	604.18 ADJUSTING MANHOLE OR CATCH BASIN TO GRADE	3.000 EA				
0250	605.09 6 INCH UNDERDRAIN TYPE B	40.000 LF				
0260	605.12 15 INCH UNDERDRAIN TYPE C	210.000 LF				
0270	606.23 GUARDRAIL TYPE 3C - SINGLE RAIL	1862.500 LF				
0280	606.35 GUARDRAIL DELINEATOR POST	26.000 EA				
0290	606.754 WIDEN SHOULDER FOR GUARDRAIL 350 FLARED TERMINAL	8.000 EA				

CONTRACT ID: 011256.00 PROJECT(S): STP-1125(600)X
STP-1125(700)X
STP-1125(800)X
OTHERS

CONTRACTOR :_____

LINE NO	ITEM DESCRIPTION	APPROX. QUANTITY AND UNITS	UNIT PRICE DOLLARS	UNIT PRICE CTS	BID AMOUNT DOLLARS	BID AMOUNT CTS
0300	606.79 GUARDRAIL 350 FLARED TERMINAL	13.000 EA				
0310	608.45 CONSTRUCTION SIDEWALK	30.000 SY				
0320	609.31 CURB TYPE 3	1860.000 LF				
0330	609.38 RESET CURB TYPE 1	40.000 LF				
0340	610.08 PLAIN RIPRAP	100.000 CY				
0350	610.16 HEAVY RIPRAP	380.000 CY				
0360	610.18 STONE DITCH PROTECTION	130.000 CY				
0370	613.319 EROSION CONTROL BLANKET	3930.000 SY				
0380	615.07 LOAM	940.000 CY				
0390	618.1301 SEEDING METHOD NUMBER 1 - PLAN QUANTITY	151.000 UN				

CONTRACT ID: 011256.00 PROJECT(S): STP-1125(600)X
STP-1125(700)X
STP-1125(800)X
OTHERS

CONTRACTOR :_____

LINE NO	ITEM DESCRIPTION	APPROX. QUANTITY AND UNITS	UNIT PRICE DOLLARS	UNIT PRICE CTS	BID AMOUNT DOLLARS	BID AMOUNT CTS
0400	618.1401 SEEDING METHOD NUMBER 2 - PLAN QUANTITY	210.000 UN				
0410	619.1201 MULCH - PLAN QUANTITY	361.000 UN				
0420	620.54 STABILIZATION GEOTEXTILE	70.000 SY				
0430	620.58 EROSION CONTROL GEOTEXTILE	850.000 SY				
0440	627.76 TEMPORARY PVMT. MARK LINE, W OR YELLOW	LUMP	LUMP			
0450	629.05 HAND LABOR, STRAIGHT TIME	20.000 HR				
0460	631.10 AIR COMPRESSOR (INCLUDING OPERATOR)	20.000 HR				
0470	631.11 AIR TOOL (INCLUDING OPERATOR)	20.000 HR				
0480	631.12 ALL PURPOSE EXCAVATOR (INCLUDING OPERATOR)	20.000 HR				
0490	631.132 SMALL BULLDOZER (INCLUDING OPERATOR)	10.000 HR				

CONTRACT ID: 011256.00 PROJECT(S): STP-1125(600)X
STP-1125(700)X
STP-1125(800)X
OTHERS

CONTRACTOR :_____

LINE NO	ITEM DESCRIPTION	APPROX. QUANTITY AND UNITS	UNIT PRICE DOLLARS	UNIT PRICE CTS	BID AMOUNT DOLLARS	BID AMOUNT CTS
0500	631.14 GRADER (INCLUDING OPERATOR)	20.000 HR				
0510	631.172 TRUCK - LARGE (INCLUDING OPERATOR)	30.000 HR				
0520	631.18 CHAIN SAW RENTAL (INCLUDING OPERATOR)	10.000 HR				
0530	631.32 CULVERT CLEANER (INCLUDING OPERATOR)	25.000 HR				
0540	639.19 FIELD OFFICE TYPE B	1.000 EA				
0550	643.86 TRAFFIC SIGNAL LOOP DETECTORS	2.000 EA				
0560	652.38 FLAGGER	4150.000 HR				
0570	652.39 WORK ZONE TRAFFIC CONTROL	LUMP	LUMP			
0580	653.22 2 INCH POLYSTYRENE PLASTIC INSULATION	31.000 SY				
0590	656.75 TEMPORARY SOIL EROSION AND WATER POLLUTION CONTROL	LUMP	LUMP			

CONTRACT ID: 011256.00 PROJECT(S): STP-1125(600)X
STP-1125(700)X
STP-1125(800)X
OTHERS

CONTRACTOR :_____

LINE NO	ITEM DESCRIPTION	APPROX. QUANTITY AND UNITS	UNIT PRICE DOLLARS	UNIT PRICE CTS	BID AMOUNT DOLLARS	BID AMOUNT CTS
0600	659.10 MOBILIZATION	LUMP	LUMP			
0610	660.21 ON-THE-JOB TRAINING (BID)	1000.000 HR				
	SECTION 0001 TOTAL					
	TOTAL BID					

CONTRACT AGREEMENT, OFFER & AWARD

AGREEMENT made on the date last signed below, by and between the State of Maine, acting through and by its Department of Transportation (Department), an agency of state government with its principal administrative offices located at Child Street, Augusta, Maine, with a mailing address at 16 State House Station, Augusta, Maine 04333-0016, and _____ a corporation or other legal entity organized under the laws of the State of Maine, with its principal place of business located at _____ _____

The Department and the Contractor, in consideration of the mutual promises set forth in this Agreement (the "Contract"), hereby agree as follows:

A. The Work.

The Contractor agrees to complete all Work as specified or indicated in the Contract including Extra Work in conformity with the Contract, **STP-1125(600)X, PIN 11256.00; STP-1125(700)X, PIN 11257.00; STP-1125(800)X, PIN 11258.00; STP-1125(900)X, PIN 11259.00; STP-1132(400)X, PIN 11324.00; STP-1132(500)X, PIN 11325.00; STP-1217(300)X, PIN 12173.00, for the Hot Mix Asphalt Overlay, Milling, Full Depth Recycled Pavement with Foamed Asphalt, Drainage and Safety Improvements in the towns of Fort Kent, St Francis and St John Plt, County of Aroostook, State of Maine.** The Work includes construction, maintenance during construction, warranty as provided in the Contract, and other incidental work.

The Contractor shall be responsible for furnishing all supervision, labor, equipment, tools supplies, permanent materials and temporary materials required to perform the Work including construction quality control including inspection, testing and documentation, all required documentation at the conclusion of the project, warranting its work and performing all other work indicated in the Contract.

The Department shall have the right to alter the nature and extent of the Work as provided in the Contract; payment to be made as provided in the same.

B. Time.

The Contractor agrees to complete all Work, except warranty work, on or before **September 17, 2004.** Further, the Department may deduct from moneys otherwise due the Contractor, not as a penalty, but as Liquidated Damages in accordance with Sections 107.7 and 107.8 of the State of Maine Department of Transportation Standard Specifications, Revision of December 2002.

C. Price.

The quantities given in the Schedule of Items of the Bid Package will be used as the basis for determining the original Contract amount and for determining the amounts of the required Performance Surety Bond and Payment Surety Bond, and that the amount of this offer is _____

_____

$_____ Performance Bond and Payment Bond each being 100% of the amount of this Contract.

D. Contract.

This Contract, which may be amended, modified, or supplemented in writing only, consists of the Contract documents as defined in the Plans, Standard Specifications, Revision of December 2002, Standard Details Revision of December 2002 as updated through advertisement, Supplemental Specifications, Special Provisions, Contract Agreement; and Contract Bonds. It is agreed and understood that this Contract will be governed by the documents listed above.

E. Certifications.

By signing below, the Contractor hereby certifies that to the best of the Contractor's knowledge and belief:

1. All of the statements, representations, covenants, and/or certifications required or set forth in the Bid and the Bid Documents, including those in Appendix A to Division 100 of the Standard Specifications Revision of December 2002 (Federal Contract Provisions Supplement), and the Contract are still complete and accurate as of the date of this Agreement.

2. The Contractor knows of no legal, contractual, or financial impediment to entering into this Contract.

3. The person signing below is legally authorized by the Contractor to sign this Contract on behalf of the Contractor and to legally bind the Contractor to the terms of the Contract.

F. Offer.

The undersigned, having carefully examined the site of work, the Plans, Standard Specifications Revision of December 2002, Standard Details Revision of December 2002 as updated through advertisement, Supplemental Specifications, Special Provisions, Contract Agreement; and Contract Bonds contained herein for construction of: **STP-1125(600)X, PIN 11256.00; STP-1125(700)X, PIN 11257.00; STP-1125(800)X, PIN 11258.00; STP-1125(900)X, PIN 11259.00; STP-1132(400)X, PIN 11324.00; STP-1132(500)X, PIN 11325.00; STP-1217(300)X, PIN 12173.00, for the Hot Mix Asphalt Overlay, Milling, Full Depth Recycled Pavement with Foamed Asphalt, Drainage and Safety Improvements in the towns of Fort Kent, St Francis and St John Plt, County of Aroostook, State of Maine**, on which bids will be received until the time specified in the "Notice to Contractors" do(es) hereby bid and offer to enter into this contract to supply all the materials, tools, equipment and labor to construct the whole of the Work in strict accordance with the terms and conditions of this Contract at the unit prices in the attached "Schedule of Items".

The Offeror agrees to perform the work required at the price specified above and in accordance with the bids provided in the attached "Schedule of Items" in strict accordance with the terms of this solicitation, and to provide the appropriate insurance and bonds if this offer is accepted by the Government in writing.

As Offeror also agrees:

First: To do any extra work, not covered by the attached "Schedule of Items", which may be ordered by the Resident, and to accept as full compensation the amount determined upon a "Force Account" basis as provided in the Standard Specifications, Revision of December 2002, and as addressed in the contract documents.

Second: That the bid bond at 5% of the bid amount or the official bank check, cashier's check, certificate of deposit or U. S. Postal Money Order in the amount given in the "Notice to Contractors", payable to the Treasurer of the State of Maine and accompanying this bid, shall be forfeited, as liquidated damages, if in case this bid is accepted, and the undersigned shall fail to abide by the terms and conditions of the offer and fail to furnish satisfactory insurance and Contract bonds under the conditions stipulated in the Specifications within 15 days of notice of intent to award the contract.

Third: To begin the Work on the date specified in the Engineer's "Notice to Commence Work" as stated in Section 107.2 of the Standard Specifications Revision of December 2002 and complete the Work within the time limits given in the Special Provisions of this Contract.

Fourth: The Contractor will be bound to the Disadvantaged Business Enterprise (DBE) Requirements contained in the attached Notice (Additional Instructions to Bidders) and submit a completed Contractor's Disadvantaged Business Enterprise Utilization Plan by 4:30pm on the day of bid opening to the Contracts Engineer.

Fifth: That this offer shall remain open for 30 calendar days after the date of opening of bids.

Sixth: The Bidder hereby certifies, to the best of its knowledge and belief that: the Bidder has not, either directly or indirectly, entered into any agreement, participated in any collusion, or otherwise taken any action in restraint of competitive bidding in connection with its bid, and its subsequent contract with the Department.

IN WITNESS WHEREOF, the Contractor, for itself, its successors and assigns, hereby execute two duplicate originals of this Agreement and thereby binds itself to all covenants, terms, and obligations contained in the Contract Documents.

CONTRACTOR

_____	_____
Date	(Signature of Legally Authorized Representative of the Contractor)
_____	_____
Witness	(Name and Title Printed)

G. Award.

Your offer is hereby accepted. This award consummates the Contract, and the documents referenced herein.

MAINE DEPARTMENT OF TRANSPORTATION

_____	_____
Date	By: David A. Cole, Commissioner
_____	
Witness	

CONTRACT AGREEMENT, OFFER & AWARD

AGREEMENT made on the date last signed below, by and between the State of Maine, acting through and by its Department of Transportation (Department), an agency of state government with its principal administrative offices located at Child Street, Augusta, Maine, with a mailing address at 16 State House Station, Augusta, Maine 04333-0016, and _____ a corporation or other legal entity organized under the laws of the State of Maine, with its principal place of business located at _____ _____

The Department and the Contractor, in consideration of the mutual promises set forth in this Agreement (the "Contract"), hereby agree as follows:

A. The Work.

The Contractor agrees to complete all Work as specified or indicated in the Contract including Extra Work in conformity with the Contract, **STP-1125(600)X, PIN 11256.00; STP-1125(700)X, PIN 11257.00; STP-1125(800)X, PIN 11258.00; STP-1125(900)X, PIN 11259.00; STP-1132(400)X, PIN 11324.00; STP-1132(500)X, PIN 11325.00; STP-1217(300)X, PIN 12173.00, for the Hot Mix Asphalt Overlay, Milling, Full Depth Recycled Pavement with Foamed Asphalt, Drainage and Safety Improvements in the towns of Fort Kent, St Francis and St John Plt, County of Aroostook, State of Maine.** The Work includes construction, maintenance during construction, warranty as provided in the Contract, and other incidental work.

The Contractor shall be responsible for furnishing all supervision, labor, equipment, tools supplies, permanent materials and temporary materials required to perform the Work including construction quality control including inspection, testing and documentation, all required documentation at the conclusion of the project, warranting its work and performing all other work indicated in the Contract.

The Department shall have the right to alter the nature and extent of the Work as provided in the Contract; payment to be made as provided in the same.

B. Time.

The Contractor agrees to complete all Work, except warranty work, on or before **September 17, 2004.** Further, the Department may deduct from moneys otherwise due the Contractor, not as a penalty, but as Liquidated Damages in accordance with Sections 107.7 and 107.8 of the State of Maine Department of Transportation Standard Specifications, Revision of December 2002.

C. Price.

The quantities given in the Schedule of Items of the Bid Package will be used as the basis for determining the original Contract amount and for determining the amounts of the required Performance Surety Bond and Payment Surety Bond, and that the amount of this offer is _____

_____

$_____ Performance Bond and Payment Bond each being 100% of the amount of this Contract.

D. Contract.

This Contract, which may be amended, modified, or supplemented in writing only, consists of the Contract documents as defined in the Plans, Standard Specifications, Revision of December 2002, Standard Details Revision of December 2002 as updated through advertisement, Supplemental Specifications, Special Provisions, Contract Agreement; and Contract Bonds. It is agreed and understood that this Contract will be governed by the documents listed above.

E. Certifications.

By signing below, the Contractor hereby certifies that to the best of the Contractor's knowledge and belief:

1. All of the statements, representations, covenants, and/or certifications required or set forth in the Bid and the Bid Documents, including those in Appendix A to Division 100 of the Standard Specifications Revision of December 2002 (Federal Contract Provisions Supplement), and the Contract are still complete and accurate as of the date of this Agreement.

2. The Contractor knows of no legal, contractual, or financial impediment to entering into this Contract.

3. The person signing below is legally authorized by the Contractor to sign this Contract on behalf of the Contractor and to legally bind the Contractor to the terms of the Contract.

F. Offer.

The undersigned, having carefully examined the site of work, the Plans, Standard Specifications Revision of December 2002, Standard Details Revision of December 2002 as updated through advertisement, Supplemental Specifications, Special Provisions, Contract Agreement; and Contract Bonds contained herein for construction of: **STP-1125(600)X, PIN 11256.00; STP-1125(700)X, PIN 11257.00; STP-1125(800)X, PIN 11258.00; STP-1125(900)X, PIN 11259.00; STP-1132(400)X, PIN 11324.00; STP-1132(500)X, PIN 11325.00; STP-1217(300)X, PIN 12173.00, for the Hot Mix Asphalt Overlay, Milling, Full Depth Recycled Pavement with Foamed Asphalt, Drainage and Safety Improvements in the towns of Fort Kent, St Francis and St John Plt, County of Aroostook, State of Maine**, on which bids will be received until the time specified in the "Notice to Contractors" do(es) hereby bid and offer to enter into this contract to supply all the materials, tools, equipment and labor to construct the whole of the Work in strict accordance with the terms and conditions of this Contract at the unit prices in the attached "Schedule of Items".

The Offeror agrees to perform the work required at the price specified above and in accordance with the bids provided in the attached "Schedule of Items" in strict accordance with the terms of this solicitation, and to provide the appropriate insurance and bonds if this offer is accepted by the Government in writing.

As Offeror also agrees:

First: To do any extra work, not covered by the attached "Schedule of Items", which may be ordered by the Resident, and to accept as full compensation the amount determined upon a "Force Account" basis as provided in the Standard Specifications, Revision of December 2002, and as addressed in the contract documents.

Second: That the bid bond at 5% of the bid amount or the official bank check, cashier's check, certificate of deposit or U. S. Postal Money Order in the amount given in the "Notice to Contractors", payable to the Treasurer of the State of Maine and accompanying this bid, shall be forfeited, as liquidated damages, if in case this bid is accepted, and the undersigned shall fail to abide by the terms and conditions of the offer and fail to furnish satisfactory insurance and Contract bonds under the conditions stipulated in the Specifications within 15 days of notice of intent to award the contract.

Third: To begin the Work on the date specified in the Engineer's "Notice to Commence Work" as stated in Section 107.2 of the Standard Specifications Revision of December 2002 and complete the Work within the time limits given in the Special Provisions of this Contract.

Fourth: The Contractor will be bound to the Disadvantaged Business Enterprise (DBE) Requirements contained in the attached Notice (Additional Instructions to Bidders) and submit a completed Contractor's Disadvantaged Business Enterprise Utilization Plan by 4:30pm on the day of bid opening to the Contracts Engineer.

Fifth: That this offer shall remain open for 30 calendar days after the date of opening of bids.

Sixth: The Bidder hereby certifies, to the best of its knowledge and belief that: the Bidder has not, either directly or indirectly, entered into any agreement, participated in any collusion, or otherwise taken any action in restraint of competitive bidding in connection with its bid, and its subsequent contract with the Department.

IN WITNESS WHEREOF, the Contractor, for itself, its successors and assigns, hereby execute two duplicate originals of this Agreement and thereby binds itself to all covenants, terms, and obligations contained in the Contract Documents.

CONTRACTOR

_____	_____
Date	(Signature of Legally Authorized Representative of the Contractor)
_____	_____
Witness	(Name and Title Printed)

G. Award.

Your offer is hereby accepted. This award consummates the Contract, and the documents referenced herein.

MAINE DEPARTMENT OF TRANSPORTATION

_____	_____
Date	By: David A. Cole, Commissioner
_____	
Witness	

CONTRACT AGREEMENT, OFFER & AWARD

AGREEMENT made on the date last signed below, by and between the State of Maine, acting through and by its Department of Transportation (Department), an agency of state government with its principal administrative offices located at 1705 U.S. Route 202, Winthrop, Maine, with a mailing address at 16 State House Station, Augusta, Maine 04333-0016, and **(Name of the firm bidding the job)** a corporation or other legal entity organized under the laws of the State of Maine, with its principal place of business located at **(address of the firm bidding the job)**

The Department and the Contractor, in consideration of the mutual promises set forth in this Agreement (the "Contract"), hereby agree as follows:

SAMPLE

A. The Work.

The Contractor agrees to complete all Work as specified or indicated in the Contract including Extra Work in conformity with the Contract, PIN No. **1224.00**, for the **Hot Mix Asphalt Overlay** in the town/city of **West Eastport**, County of **Washington**, Maine. The Work includes construction, maintenance during construction, warranty as provided in the Contract, and other incidental work.

The Contractor shall be responsible for furnishing all supervision, labor, equipment, tools supplies, permanent materials and temporary materials required to perform the Work including construction quality control including inspection, testing and documentation, all required documentation at the conclusion of the project, warranting its work and performing all other work indicated in the Contract.

The Department shall have the right to alter the nature and extent of the Work as provided in the Contract; payment to be made as provided in the same.

B. Time.

The Contractor agrees to complete all Work, except warranty work, on or before **November 15**, 2003**.** Further, the Department may deduct from moneys otherwise due the Contractor, not as a penalty, but as Liquidated Damages in accordance with Sections 107.7 and 107.8 of the State of Maine Department of Transportation Standard Specifications, Revision of December 2002.

C. Price.

The quantities given in the Schedule of Items of the Bid Package will be used as the basis for determining the original Contract amount and for determining the amounts of the required Performance Surety Bond and Payment Surety Bond, and that the amount of this offer is **____(Place bid here in alphabetical form such as One Hundred and Two dollars and 10 cents)**
$_ (repeat bid here in numerical terms, such as $102.10)_____ Performance Bond and Payment Bond each being 100% of the amount of this Contract.

D. Contract.

This Contract, which may be amended, modified, or supplemented in writing only, consists of the Contract documents as defined in the Plans, Standard Specifications, Revision of December 2002, Standard Details Revision of December 2002, Supplemental Specifications, Special Provisions, Contract Agreement; and Contract Bonds. It is agreed and understood that this Contract will be governed by the documents listed above.

E. Certifications.

By signing below, the Contractor hereby certifies that to the best of the Contractor's knowledge and belief:

1. All of the statements, representations, covenants, and/or certifications required or set forth in the Bid and the Bid Documents, including those in Appendix A to Division 100 of the Standard Specifications Revision of December 2002 (Federal Contract Provisions Supplement), and the Contract are still complete and accurate as of the date of this Agreement.

2. The Contractor knows of no legal, contractual, or financial impediment to entering into this Contract.

3. The person signing below is legally authorized by the Contractor to sign this Contract on behalf of the Contractor and to legally bind the Contractor to the terms of the Contract.

F. Offer.

SAMPLE

The undersigned, having carefully examined the site of work, the Plans, Standard Specifications, Revision of December 2002, Standard Details Revision of December 2002, Supplemental Specifications, Special Provisions, Contract Agreement; and Contract Bonds contained herein for construction of:

_____PIN 1234.00 West Eastport, Hot Mix Asphalt Overlay_____,
State of Maine, on which bids will be received until the time specified in the "Notice to Contractors" do(es) hereby bid and offer to enter into this contract to supply all the materials, tools, equipment and labor to construct the whole of the Work in strict accordance with the terms and conditions of this Contract at the unit prices in the attached "Schedule of Items".

The Offeror agrees to perform the work required at the price specified above and in accordance with the bids provided in the attached "Schedule of Items" in strict accordance with the terms of this solicitation, and to provide the appropriate insurance and bonds if this offer is accepted by the Government in writing.

SAMPLE

As Offeror also agrees:

First: To do any extra work, not covered by the attached "Schedule of Items", which may be ordered by the Resident, and to accept as full compensation the amount determined upon a "Force Account" basis as provided in the Standard Specifications, Revision of December 2002, and as addressed in the contract documents.

Second: That the bid bond at 5% of the bid amount or the official bank check, cashier's check, certificate of deposit or U. S. Postal Money Order in the amount given in the "Notice to Contractors", payable to the Treasurer of the State of Maine and accompanying this bid, shall be forfeited, as liquidated damages, if in case this bid is accepted, and the undersigned shall fail to abide by the terms and conditions of the offer and fail to furnish satisfactory insurance and Contract bonds under the conditions stipulated in the Specifications within 15 days of notice of intent to award the contract.

Third: To begin the Work on the date specified in the Engineer's "Notice to Commence Work" as stated in Section 107.2 of the Standard Specifications Revision of 2002 and complete the Work within the time limits given in the Special Provisions of this Contract.

Fourth: The Contractor will be bound to the Disadvantaged Business Enterprise (DBE) Requirements contained in the attached Notice (Additional Instructions to Bidders) and submit a completed Contractor's Disadvantaged Business Enterprise Utilization Plan by 4:30pm on the day of bid opening to the Contracts Engineer.

Fifth: That this offer shall remain open for 30 calendar days after the date of opening of bids.

Sixth: The Bidder hereby certifies, to the best of its knowledge and belief that: the Bidder has not, either directly or indirectly, entered into any agreement, participated in any collusion, or otherwise taken any action in restraint of competitive bidding in connection with its bid, and its subsequent contract with the Department.

IN WITNESS WHEREOF, the Contractor, for itself, its successors and assigns, hereby execute two duplicate originals of this Agreement and thereby binds itself to all covenants, terms, and obligations contained in the Contract Documents.

CONTRACTOR

_____	**(Sign Here)**_____
Date	(Signature of Legally Authorized Representative of the Contractor)
____(**Witness Sign Here)**_____	**(Print Name Here)**_____
Witness	(Name and Title Printed)

SAMPLE

G. Award.

Your offer is hereby accepted. This award consummates the Contract, and the documents referenced herein.

MAINE DEPARTMENT OF TRANSPORTATION

_____	_____
Date	By: David A. Cole, Commissioner

_____
(Witness)

BOND # _____

CONTRACT PERFORMANCE BOND
(Surety Company Form)

KNOW ALL MEN BY THESE PRESENTS: That _____ _____ **and the State of** _____, as principal, and…….....,
a corporation duly organized under the laws of the State of ..... and having a usual place of business ....,
as Surety, are held and firmly bound unto the Treasurer of the State of Maine in the sum of _____ **and 00/100 Dollars ($)**, to be paid said Treasurer of the State of Maine or his successors in office, for which payment well and truly to be made, Principal and Surety bind themselves, their heirs, executors and administrators, successors and assigns, jointly and severally by these presents.

The condition of this obligation is such that if the Principal designated as Contractor in the Contract to construct Project Number _____ in the Municipality of _____ promptly and faithfully performs the Contract, then this obligation shall be null and void; otherwise it shall remain in full force and effect.

The Surety hereby waives notice of any alteration or extension of time made by the State of Maine.

Signed and sealed this ..... day of ....., 20….. .

WITNESSES:	SIGNATURES:
	CONTRACTOR:
Signature.....	.....….....
Print Name Legibly	Print Name Legibly ...…….....
	SURETY:
Signature	.....…….....
Print Name Legibly	Print Name Legibly .....
SURETY ADDRESS:	NAME OF LOCAL AGENCY:
.....	ADDRESS .....
.....	...…….....
.....	.....…….....
TELEPHONE.....	.....…….....

SAMPLE

BOND # _____

CONTRACT PAYMENT BOND
(Surety Company Form)

KNOW ALL MEN BY THESE PRESENTS: That _____ _____ **and the State of** _____, as principal, and.....….....
a corporation duly organized under the laws of the State of ..... and having a usual place of business in .....……., as Surety, are held and firmly bound unto the Treasurer of the State of Maine for the use and benefit of claimants as herein below defined, in the sum of _____ **and 00/100 Dollars ($)** for the payment whereof Principal and Surety bind themselves, their heirs, executors and administrators, successors and assigns, jointly and severally by these presents.

The condition of this obligation is such that if the Principal designated as Contractor in the Contract to construct Project Number _____ in the Municipality of _____ promptly satisfies all claims and demands incurred for all labor and material, used or required by him in connection with the work contemplated by said Contract, and fully reimburses the obligee for all outlay and expense which the obligee may incur in making good any default of said Principal, then this obligation shall be null and void; otherwise it shall remain in full force and effect.

A claimant is defined as one having a direct contract with the Principal or with a Subcontractor of the Principal for labor, material or both, used or reasonably required for use in the performance of the contract.

Signed and sealed this ..... day of ...……....., 20 ... .

WITNESS:	SIGNATURES:
	CONTRACTOR:
Signature…….....	.....….....
Print Name Legibly .....……..	Print Name Legibly ….....
	SURETY:
Signature.....	...….....
Print Name Legibly	Print Name Legibly ….....
SURETY ADDRESS:	NAME OF LOCAL AGENCY:
...….....	ADDRESS ….....
.....	…….....….....
TELEPHONE	…….....….....

SAMPLE

January 26, 1999

SPECIAL PROVISION
PARTNERING

The successful bidder will have the opportunity to enter into a cooperative partnership agreement with the State Department of Transportation for the contract. The objective of this agreement is the effective completion of the work on time and to the standard of quality that will be a source of pride to both the State and the Contractor. The partnering agreement will not affect the terms of the contract. It is intended only to establish an environment of cooperation between the parties. If the partnering agreement is accepted.

1. Contractor shall select and provide a third-party facilitator to conduct the team building workshop for the Contractor and Department personnel. Facilitator selection shall require Department concurrence. The cost for the facilitator and his associated expenses will be shared equally by the Department on the next monthly estimate, following receipt of invoice(s) from the Contractor, on an extra work basis.

2. Contractor and Department will exchange lists of the key personnel to be participants in the workshop. The list will contain the name and job title of each person, a contact phone number, and the address for job related correspondence.

3. The Contractor shall select the location and make all arrangements for space as required by facilitator, and for any meals required. This cost to be shared equally.

4. A working arrangement for the partnership will be agreed upon in writing at the workshop. The arrangement will set out the mutually recognized goals and expectation of the parties.

5. The Contractor and the Department agree to make an effort to maintain identified key personnel assigned to the work for its duration. A timely notice by each shall be given if changes by either must be made.

6. Project issues shall be processed in the manner agreed upon by the parties during the orientation.

7. Follow-up workshops may be held periodically throughout the duration of the contract as agreed by the Contractor and the Department.

8. The Partnering Agreement is not intended to be a legal document. Failure by either party to follow the process identified will not be grounds for any claim under the contract.

9. ARE YOU INTERESTED IN THIS OPPORTUNITY? YES _____ NO _____

STP - 1125(600)X
STP - 1125(700)X
STP - 1125(800)X
STP - 1125(900)X
STP - 1217(300)X
St. John - St. Francis
Rte. 161
Level II, PPM

General Outline of Work

1 **Replace Driveway and cross culverts as called for in the Construction Notes or as directed by the Resident Inspector.**

2 **Ditch and / or Inslope as called for in the Construction Notes or as directed by the Resident Inspector.**

3 **Install 350 Flared Terminals, guardrail, and guardrail items as called for in the Construction Notes or as directed by the Resident Inspector.**

4 **Install curb as called for in the Construction Notes or as directed by the Resident Inspector.**

PIN #	Town	Start Station	End Station	Length in Feet	Length in Miles
11259.00	St. John	10+00	116+04	10604	2.01
11258.00	St. John - St. Francis	116+04	133+00	1696	0.32
11256.00	St. Francis	133+00	173+76	4076	0.77
11257.00	St. Francis	173+76	237+35	6359	1.20
				Total Feet	Total Miles
				22735	4.31

Section I: - Shim & Overlay with Rehab. Shld - Sta. 10+00 to Sta. 23+00

A. Pave main line in Section I with a variable depth of 9.5mm HMA Shim (Item # 403.211).

B. Rehab shoulders (Item # 204.41) as stated in the Construction notes.

C. Place 1.25" depth of 9.5mm HMA (Item # 403.210) on main line as the surface course.

D. Place 2" depth of 9.5mm HMA (Item # 403.210) on the Shoulder Rehab Area (Item # 204.41).

Section II: – Foamed Asphalt Area – Sta. 23+00 to Sta. 116+50

A. Use equipment rental (Grader, Item # 631.14) to remove vegetation and other unsuitable material

B. Place pavement salvage material (Item # 411.10) from the Fort Kent MaineDOT Maintenance Lot on main line and shoulders where needed to re-establish proper cross slope.

C. In accordance with Special Provision 309, reclaim both main line and shoulders into a homogenous mass, grade and compact to correct cross slope. While reclaiming the material again treat it with the foamed asphalt process, grade and compact. (Item # 309.36)

D. Place two lifts of 9.5mm HMA (Item # 403.210) on main line and shoulders. 1.25" depth per lift.

General Outline of Work

Section III: – Overlay Area - Sta. 116+50 to Sta. 133+00

A. Pave all roadway areas in Section III with a variable depth of 9.5mm HMA Shim (Item # 403.211). Shoulder shim shall taper to 0" at face of guardrail.

B. Pave all roadway areas in Section III with 3/4" depth of 9.5mm HMA (Item # 403.210).

Section IV: – HMA Overlay – Sta. 133+00 to Sta. 237+35

A. Pave main line in Section IV with a variable depth of 9.5mm HMA Shim (Item # 403.211).

B. Pave mainline in Section IV with 3/4" depth of 9.5mm HMA (Item # 403.210).

C. Add shoulder aggregate to existing gravel shoulders (Item # 204.21).

STATE OF MAINE
DEPARTMENT OF TRANSPORTATION

STP-1125(600)X ST. FRANCIS LEVEL II, .77 MILES

STP-1125(700)X ST. FRANCIS LEVEL II, 1.2 MILES

STP-1125(800)X ST. FRANCIS PPM, .32 MILES

STP-1125(900)X ST. JOHN LEVEL II, 2.01 MILES

STP-1217(300)X ST. JOHN - ST. FRANCIS GUARDRAIL

TOTAL PROJECT LENGTH : 4.3 MILES

ST. FRANCIS - ST. JOHN

AROOSTOOK

ROUTE 161

STP-1125(600)X
STP-1125(700)X
STP-1125(800)X
STP-1125(900)X
STP-1217(300)X

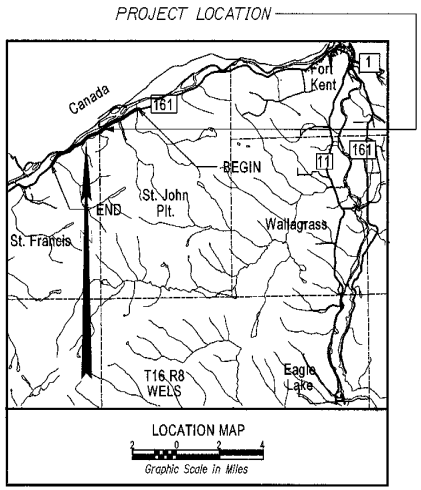

LEVEL II DRAINAGE AND SAFETY IMPROVEMENTS
&
3/4" HOT MIX ASPHALT OVERLAY

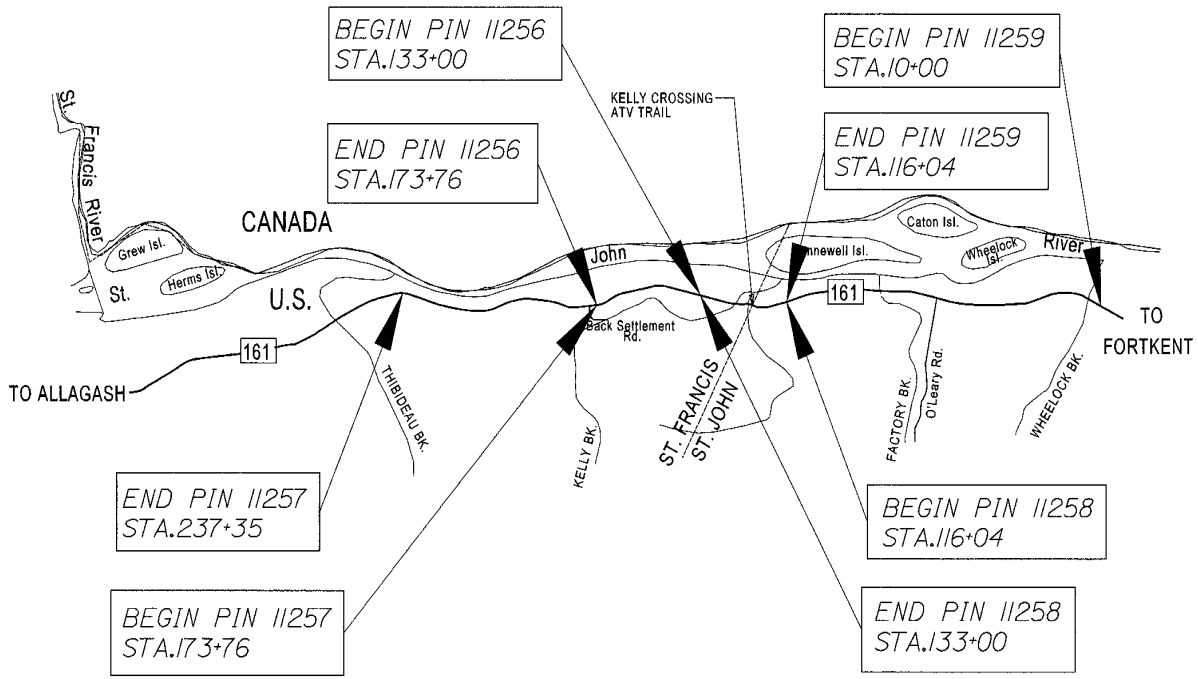

PIN 12173
PIN 11256
PIN 11257
PIN 11258
PIN 11259

STP-1217(300)X
STP-1125(600)X
STP-1125(700)X
STP-1125(800)X
STP-1125(900)X

TRAFFIC DATA

Current (2004) AADT	1080
Future (2024) AADT	1300
DHV - % of AADT	11%
Design Hour Volume	143
% Heavy Trucks (AADT)	14
% Heavy Trucks (DHV)	10
Directional Distribution (DHV)	60
18-Kip Equivalent P 2.0	172
18-Kip Equivalent P 2.5	164
Design Speed (Miles/h)	30/35/45/50

STATE OF MAINE
DEPARTMENT OF TRANSPORTATION
APPROVED
COMMISSIONER: DATE 4/5/04
CHIEF ENGINEER: 04/06/04

STATE OF MAINE Brent Steven Bucar 6640 REGISTERED PROFESSIONAL ENGINEER

PROJECT INFORMATION

PROGRAM	REGIONAL		
PROJECT MANAGER	DERYLE SPINDERG	SIGNATURE 6640	
DESIGNER	J. BITHER	P.E. NUMBER 46604	
CONSULTANT			
PROJECT RESIDENT			
CONTRACTOR		DATE	
PROJECT COMPLETION DATE			

ST. JOHN - ST. FRANCIS
ROUTE 161

TITLE SHEET

SHEET NUMBER
1

HOT MIX ASPHALT SHIM & OVERLAY
REHAB SHOULDERS
Sta. 10+00 to Sta. 23+00

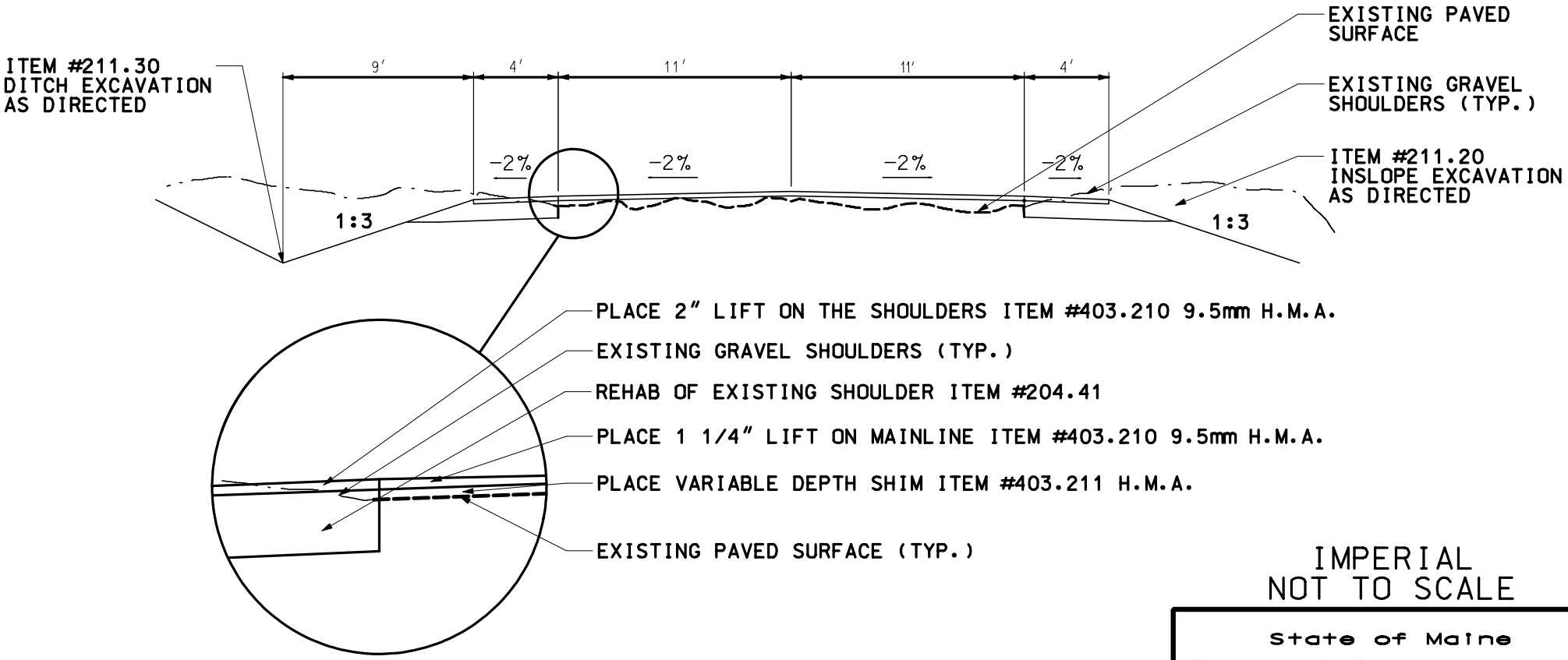

IMPERIAL
NOT TO SCALE

NOTES:

1) DITCH FLOW LINE SHALL BE 3' BELOW TOP OF NEW SHOULDER EDGE

2) WHERE NO DITCHING OR INSLOPE IS NEEDED ALONG THE SHOULDER, GRADING/ADDING, OR REMOVING OF EXCESS MATERIAL FOR 3' BEYOND SHOULDER BREAK TO MATCH THE SLOPE SHALL BE INCIDENTAL TO THE CONTRACT

3) EXISTING SHOULDERS ARE GRAVEL (TYP.)

State of Maine
Dept. of Transportation

ST. JOHN - ST. FRANCIS
Route 161
Project # STP-1125(600)X
STP-1125(700)X
STP-1125(800)X
STP-1125(900)X

03/31/04

HOT MIX ASPHALT SHIM & OVERLAY

REHAB SHOULDERS

Superelevated Sections

Sta. 10+00 to 23+00

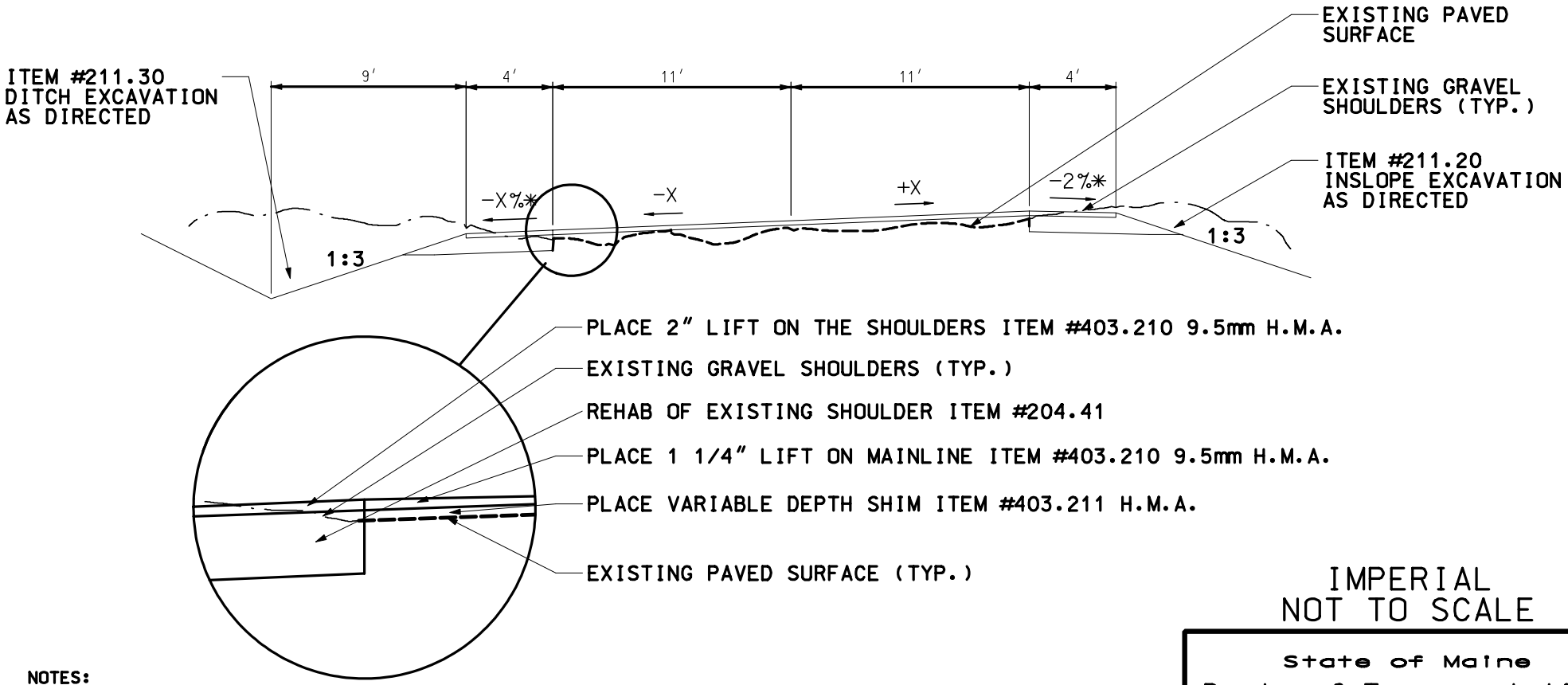

IMPERIAL
NOT TO SCALE

NOTES:

1) DITCH FLOW LINE SHALL BE 3' BELOW TOP OF NEW SHOULDER EDGE

2) WHERE NO DITCHING OR INSLOPE IS NEEDED ALONG THE SHOULDER, GRADING/ADDING, OR REMOVING OF EXCESS MATERIAL FOR 3' BEYOND SHOULDER BREAK TO MATCH THE SLOPE SHALL BE INCIDENTAL TO THE CONTRACT

*3) SHOULDERS SHALL HAVE A CROSS SLOPE OF 2% ON THE HIGH SIDE OF THE SUPERELEVATION WHEN THE ALGEBRAIC DIFFERENCE IN THE RATE OF CROSS SLOPE EXCEEDS 8%

*4) WHEN THE TRAVELWAY SUPER EXCEEDS 2%, LOW SIDE SHOULDER SLOPE SHALL BE THE SAME SLOPE AS THE TRAVELWAY

5) EXISTING SHOULDERS ARE GRAVEL (TYP.)

State of Maine
Dept. of Transportation

ST. JOHN - ST. FRANCIS
Route 161
Project # STP-1125(600)X
STP-1125(700)X
STP-1125(800)X
STP-1125(900)X

03/31/04

FULL DEPTH RECYCLED PAVEMENT WITH FOAMED ASPHALT HOT MIX ASPHALT OVERLAY

Sta. 23+00 to 116+50

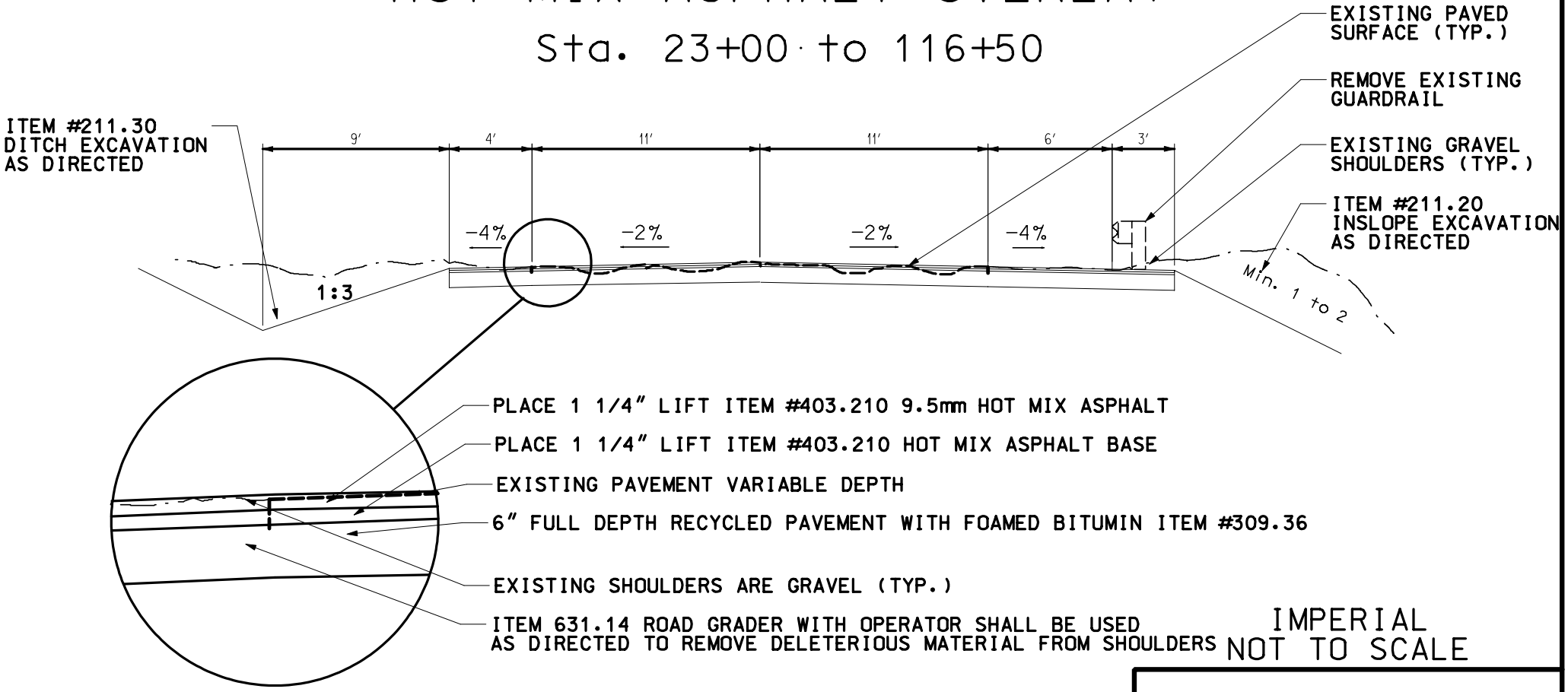

IMPERIAL
NOT TO SCALE

NOTES:

1) DITCH FLOW LINE SHALL BE 3' BELOW TOP OF NEW SHOULDER EDGE

2) WHERE NO DITCHING OR INSLOPE IS NEEDED ALONG THE SHOULDER, GRADING/ADDING, OR REMOVING OF EXCESS MATERIAL FOR 3' BEYOND SHOULDER BREAK TO MATCH THE SLOPE SHALL BE INCIDENTAL TO THE CONTRACT

State of Maine
Dept. of Transportation

ST. JOHN - ST. FRANCIS
Route 161
Project # STP-1125(600)X
STP-1125(700)X
STP-1125(800)X
STP-1125(900)X

03/31/04

FULL DEPTH RECYCLED PAVEMENT WITH FOAMED ASPHALT HOT MIX ASPHALT OVERLAY

Sta. 23+00 to 116+50

Superelevated Sections

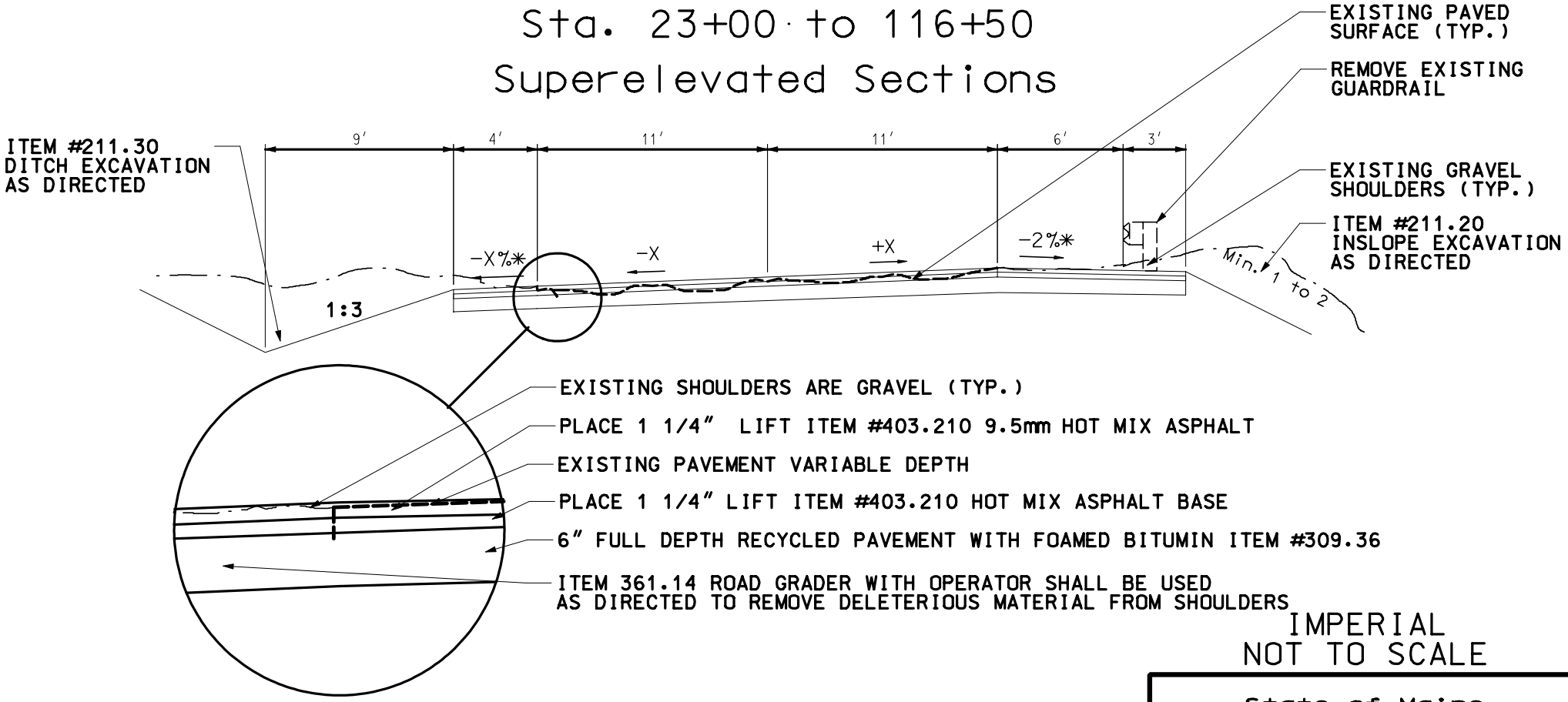

IMPERIAL
NOT TO SCALE

NOTES:

1) DITCH FLOW LINE SHALL BE 3' BELOW TOP OF NEW SHOULDER EDGE

2) WHERE NO DITCHING OR INSLOPE IS NEEDED ALONG THE SHOULDER, GRADING/ADDING, OR REMOVING OF EXCESS MATERIAL FOR 3' BEYOND SHOULDER BREAK TO MATCH THE SLOPE SHALL BE INCIDENTAL TO THE CONTRACT

*3) SHOULDERS SHALL HAVE A CROSS SLOPE OF 2% ON THE HIGH SIDE OF THE SUPERELEVATION WHEN THE ALGEBRAIC DIFFERENCE IN THE RATE OF CROSS SLOPE EXCEEDS 8%

*4) WHEN THE TRAVELWAY SUPER EXCEEDS 2%, LOW SIDE SHOULDER SLOPE SHALL BE THE SAME SLOPE AS THE TRAVELWAY

State of Maine
Dept. of Transportation

ST. JOHN - ST. FRANCIS
Route 161
Project # STP-1125(600)X
STP-1125(700)X
STP-1125(800)X
STP-1125(900)X

03/31/04

HOT MIX ASPHALT SHIM & OVERLAY

Sta. 116+50 to 133+00

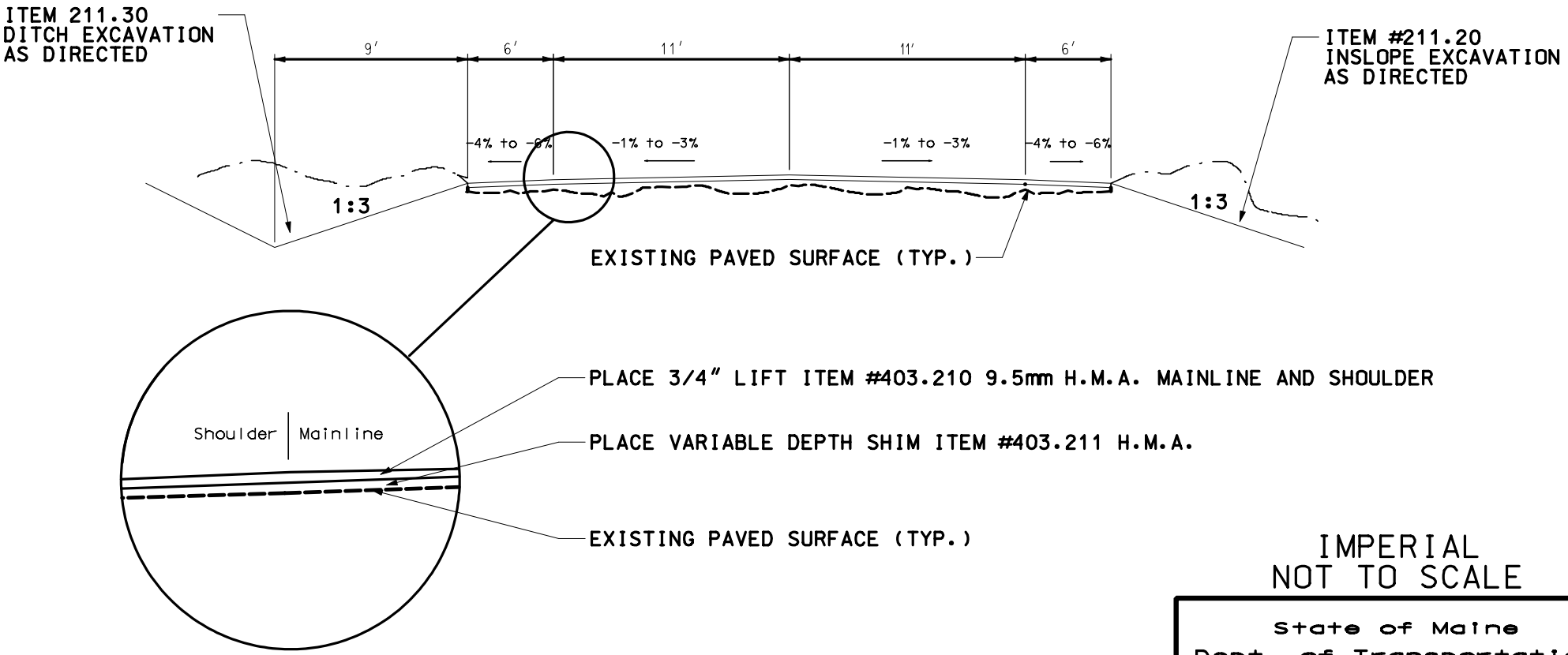

IMPERIAL
NOT TO SCALE

NOTES:

1) DITCH FLOW LINE SHALL BE 3' BELOW TOP OF NEW SHOULDER EDGE

2) WHERE NO DITCHING OR INSLOPE IS NEEDED ALONG THE SHOULDER, GRADING/ADDING, OR REMOVING OF EXCESS MATERIAL FOR 3' BEYOND SHOULDER BREAK TO MATCH THE SLOPE SHALL BE INCIDENTAL TO THE CONTRACT

3) EXISTING SHOULDERS ARE PAVED

State of Maine
Dept. of Transportation

ST. JOHN - ST. FRANCIS
Route 161
Project # STP-1125(600)X
STP-1125(700)X
STP-1125(800)X
STP-1125(900)X

03/31/04

HOT MIX ASPHALT SHIM & OVERLAY

Guardrail Section

Sta. 116+50 to 133+00

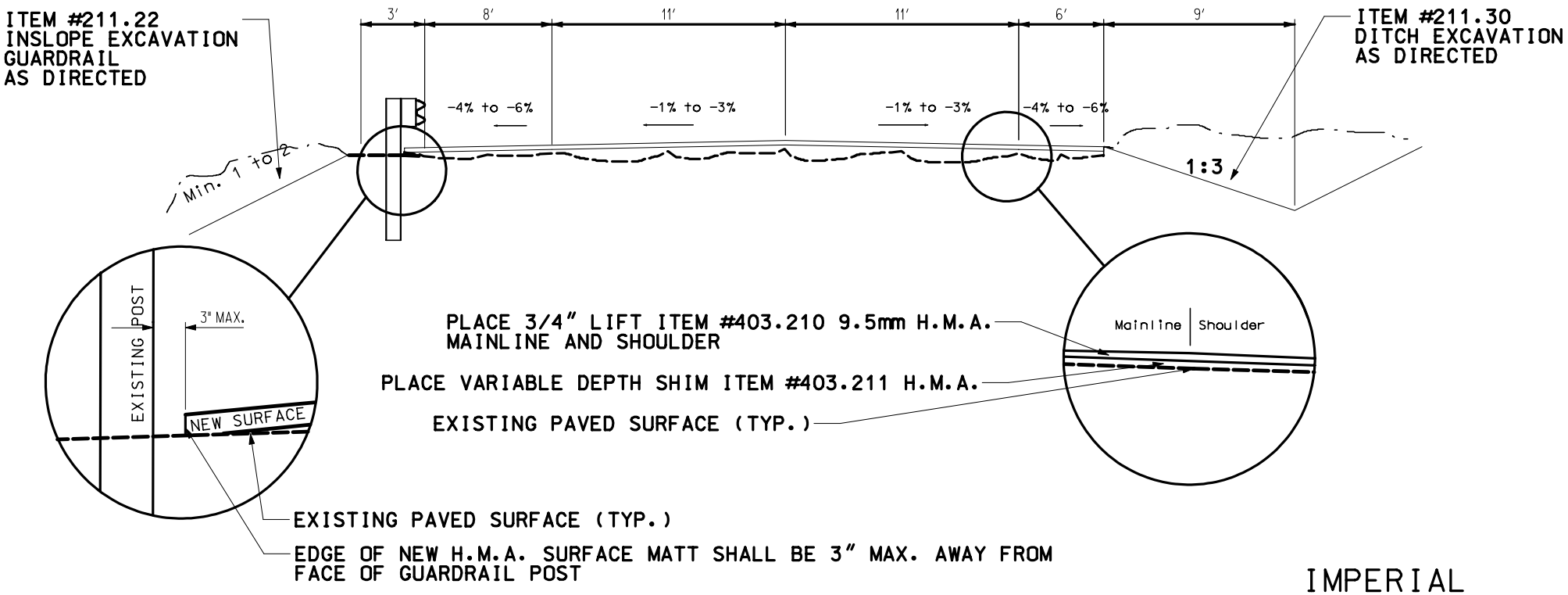

IMPERIAL
NOT TO SCALE

NOTES:

1) DITCH FLOW LINE SHALL BE 3' BELOW TOP OF NEW SHOULDER EDGE

2) WHERE NO DITCHING OR INSLOPE IS NEEDED ALONG THE SHOULDER, GRADING/ADDING, OR REMOVING OF EXCESS MATERIAL FOR 3' BEYOND SHOULDER BREAK TO MATCH THE SLOPE SHALL BE INCIDENTAL TO THE CONTRACT

3) EXISTING SHOULDERS ARE PAVED

State of Maine
Dept. of Transportation

ST. JOHN - ST. FRANCIS
Route 161
Project # STP-1125(600)X
STP-1125(700)X
STP-1125(800)X
STP-1125(900)X

03/31/04

HOT MIX ASPHALT SHIM AND OVERLAY

Sta. 133+00 to 237+35

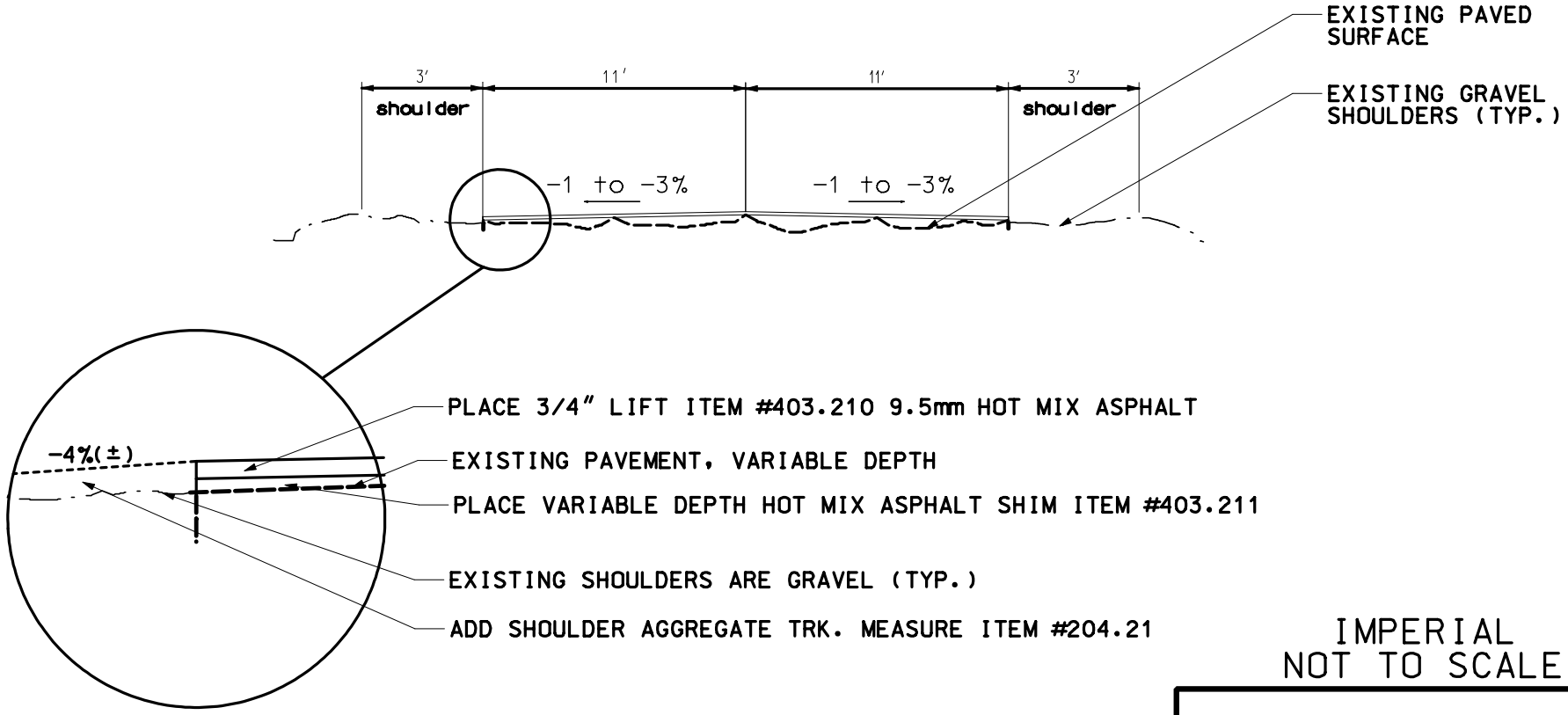

IMPERIAL
NOT TO SCALE

State of Maine
Dept. of Transportation

ST. JOHN - ST. FRANCIS
Route 161
Project # STP-1125(600)X
STP-1125(700)X
STP-1125(800)X
STP-1125(900)X

Sheet 7 of 7

03/31/04

Pole #	Topo - Left	Station	Topo - Right	Pole #
		Feet		
294	Pole	9+79		
	Begin PIN 11259	**10+00**		
	Paved Drive w/ pipe	10+50		
		10+55	mailboxs	
		10+61	Damaged Underground Cable Box 26' offset	
294-1	Underground Cable Junction Boxes	11+54		
		11+56	Bus Stop Sign/Begin Gravel Yard no pipe	
294.5	J.Pole	12+21		
		12+28	J. Pole	294.5s
	Gravel Drive no pipe	12+45		
		13+23	End Grave Yard	
	Paved Drive w/ pipe	13+33		
		13+38	mailboxs	
		14+05	J. Pole	295A
		14+24	35 MPH Sign	
		14+35	Underground Cable Junction Box	
	50 MPH Sign	14+46		
		14+48	Gravel Drive no pipe	
295	Pole	14+58		
		15+43	J. Pole	295B
		15+55	mailboxs	
		15+70	Gravel Drive no pipe	
		16+55	Begin Graurd rail	
		17+05	Curve Sign	
295.5	Pole	17+24		
	Begin Guard rail	17+25		
	x-pipe	18+26	x-pipe	
		18+66	Pole	297
		18+86	End Guard rail	
		18+92	Gravel Drive no pipe	
	PC	**19+51**	**PC**	
	End Guard Rail	19+76		
296	Pole	20+09		
		21+65	Underground Cable Junction Box	298
		21+90	mailboxs	
	Gravel Drive no pipe	22+45		
297	Pole	22+63	Paved drive no pipe	
	PT	**22+93**	**PT**	
	Paved Drive w/ pipe	23+20		
		23+26	Paved drive no pipe	
		23+37	Underground Cable Junction Box	299
	Mailbox	23+47		
	Paved Drive w/ pipe	23+60		
	Curve Sign	24+10		
298	Pole	24+90	Underground Cable Junction Box	300
	x-pipe	25+03	x-pipe	
	Lawn Ent. w/ pipe	25+16		
		25+67	mailboxs	
	Gravel Drive w/ pipe	25+71		
		26+06	Gravel Drive no pipe	
		26+56	Curve Sign	
		26+71	Underground Cable Junction Box	301
	Gravel Drive no pipe	26+82		
	PC	**27+23**	Gravel Drive no pipe	
S126/25T	Pole	27+47		
		28+54	Paved Dr. "American Dream"	

Pole #	Topo - Left	Station	Topo - Right	Pole #
		28+91	Pole	302
	Gravel Drive no pipe	29+26		
		29+44	Paved drive no pipe	
		29+77	mailboxs	
		29+87	Junction Box - can no longer find	302
		29+93	J. Pole	300S
62322	Pole	29+95		
		30+53	mailboxs	
	paved drive no pipe	30+66	Paved drive no pipe	
	PT	**30+95**	**PT**	
	Paved Drive w/ pipe	32+00		
	Mailbox	32+13		
S102/25T	Pole	32+61		
		32+80	Paved drive w/ pipe	
	Gravel Drive no pipe	33+08		
		33+20	Paved drive w/ pipe	
		34+07	Lawn Ent. w/ pipe	
		34+35	Pole	3028
		34+65	Gravel Drive w/ pipe	
S2082	Pole	**35+12**	**PC**	
304	Underground Cable Junction Boxes	35+14		
		35+26	Underground Cable Junction Box	304
	Gravel Drive no pipe	35+50		
		35+82	Lawn Ent. w/ pipe	
		35+99	mailboxs	
S2321	Pole	37+77		
		39+75	Underground Cable Junction Box	305
	PT	**40+04**	**PT**	
304	Pole	40+46		
	Woods Ent.	41+08		
	Curve Sign	41+59		
62320	Pole	43+28		
		43+87	Concrete Box	S104/77
		43+92	Underground Cable Junction Box	305-1
306	Underground Cable Junction Boxes	44+26	Woods Ent. With Pipe	
43192	Pole	44+64		
	Gravel Drive no pipe	44+91		
	Mailbox	45+10		
	Gravel Drive no pipe	45+55		
307	Underground Cable Junction Boxes	45+79		
43194	Pole	46+02		
	Gravel Drive w/ pipe	46+68		
	Lawn Ent. w/ pipe	47+30		
43195	Pole	48+31		
		48+65	Woods Ent. With Pipe	
	x-pipe	48+95	x-pipe	
	Gravel Drive w/ pipe	50+08		
		50+27	Underground Cable Junction Box	308-1
		50+28	Pole	13186
	PC	**50+41**	**PC**	
308	Underground Cable Junction Boxes	50+45		
	Lawn Ent. w/ pipe	50+64	Gravel Yard no pipe	
43197	Pole	50+79		
		51+43	Gravel Yard no pipe	
	Gravel Drive w/ pipe	51+79		
		51+91	mailboxs	
	Paved Drive w/ pipe	52+65		

Pole #	Topo - Left	Station	Topo - Right	Pole #
	x-pipe	52+91	x-pipe	
	Gravel Drive no pipe	54+15		
		54+18	mailboxs	
43202	Pole	54+62		
	PT	**54+87**	**PT**	
		55+26	Grass Ent. With Pipe	
43201	Pole	55+35		
	x-pipe	55+58	x-pipe	
	Field Ent. w/ pipe	55+74	Gravel Drive no pipe	
309	Underground Cable Junction Boxes	57+64	Underground Cable Junction Box	309-1
43203	Pole	58+12		
		58+13	mailboxs	
	Gravel Drive w/ pipe	58+26		
		58+30	Gravel Drive no pipe	
	PC	**58+72**	**PC**	
		59+87	Gravel Drive no pipe	
	Grass Ent. no pipe	60+00		
43204	Pole	60+10		
310	Underground Cable Junction Boxes	60+17	Underground Cable Junction Box	311
43206	Pole	62+11		
	PT	**62+12**	**PT**	
		62+52	mailboxs	
	Gravel Drive no pipe	62+75		
		63+43	mailboxs	
	Gravel Drive w/ pipe	63+83		
43207	Pole	64+11		
312-1	Underground Cable Junction Boxes	64+25	Underground Cable Junction Box	312
	Lawn Ent. w/ pipe	64+42		
		64+95	mailboxs	
	Gravel Drive w/ pipe	65+04		
	Broken up paved drive w/ pipe	65+48	ATV Trail	
43208	Pole	66+14		
		66+49	mailboxs	
	Paved Drive w/ pipe	66+59		
		66+65	Gravel Drive no pipe	
43209	Pole	67+82		
314	Underground Cable Junction Boxes	68+00	Underground Cable Junction Box	313
		68+13	Pole	13210
	Gravel Drive w/ pipe	68+28		
		68+73	mailboxs	
		68+87	Paved drive no pipe	
	Gravel Drive w/ pipe	69+66		
315	Underground Cable Junction Boxes	69+71		
43212	Pole	70+00		
	Gravel Drive w/ pipe	70+16		
		70+17	mailboxs	
		70+31	Begin Gravel Drive	
	Lawn Ent. w/ pipe	70+87		
		71+45	End Gravel Drive	
	PC	**71+54**	**PC**	
	Paved Drive w/ pipe	71+74		
		71+90	Gravel Drive no pipe	
43214	Pole	72+31		
316	Underground Cable Junction Boxes	72+50		
	Field Ent. w/ pipe	73+77		
43216	Pole	74+30		
	Woods Ent. no pipe	74+93		

Pole #	Topo - Left	Station	Topo - Right	Pole #
3217	Pole	76+29	Pole	13218
		76+87	Gravel Drive no pipe	
317	Underground Cable Junction Boxes	77+25		
		77+42	Begin Gravel Yard no pipe	
	PT	**77+75**	**PT**	
		77+87	End Gravel Yard	
		77+91	Pole	13220 Note 4 not 1
317-5	Underground Cable Junction Boxes	78+33		
	35 MPH	78+85	50 MPH	
		78+88	Underground Cable Junction Box	317-5A
43219	Pole	78+96		
	Gravel Drive w/ pipe	79+95		
318	Underground Cable Junction Boxes	80+14		
	Gravel Drive w/ pipe	80+68		
	Mailbox	80+76		
		81+54	Begin Guard Rail	
43221	Begin Guard rail/ pole	81+69		
	PC	**81+70**	**PC**	
	End Guard Rail	83+31		
		83+63	Curve Sign	
		83+80	End Guard rail	
	O'leary Rd. Gravel w/ pipe	84+41		
	PT	**84+88**	**PT**	
	Gravel Drive w/ pipe	85+02		
		85+56	Pole	P123/43227
319	Underground Cable Junction Boxes	86+00		
	Gravel Drive no pipe	86+51		
		88+21	Pole	43228
	PC	**89+10**	**PC**	
	Begin Crushed Stone / Gravel Yard, no pipe	90+22		
		90+88	Pole	43230
		91+25	Underground Cable Junction Box	320
	End Crushed Stone / Gravel Yard	91+51		
	x-pipe	91+75	x-pipe	
P123	Pole	92+63		
	PT	**92+96**	**PT**	
		93+69	Underground Cable Junction Box	321
	Woods Ent. no pipe	94+25		
	Reduced Speed Sign	94+42		
43233	Pole	95+17		
322	Underground Cable Junction Boxes	95+56		
	x-pipe	96+31	x-pipe	
		97+05	Paved drive no pipe	
	Curve Sign	97+26		
	Woods Ent. w/ pipe	97+52		
		97+66	Paved drive no pipe	
43234	Pole	97+78		
	Gravel Drive w/ pipe	98+76		
323	Underground Cable Junction Boxes	99+24		
		99+53	Pole/Begin Gravel Yard no pipe	43236
43235	Pole	100+29	End Gravel Yard	
	PC	**102+23**	**PC**	
		102+36	Begin Guard Rail	
	x-pipe	102+68	x-pipe	
43237	Pole	102+91		
		104+25	End Guard rail	
43238	Pole	105+47		

Pole #	Topo - Left	Station	Topo - Right	Pole #
	Gravel Drive no pipe	105+68		
324	Underground Cable Junction Boxes	106+45		
	PT	**107+02**	**PT**	
		107+56	Begin Guard Rail	
280/43240	Pole	107+86		
	x-pipe	108+16	x-pipe	
	PC	**109+80**	**PC**	
		109+94	End Guard rail	
325	Underground Cable Junction Boxes	110+03		
		110+06	Pole	432342
43241	Pole	110+09		
	Gravel Drive no pipe	110+55		
	Mailbox	110+79		
43245	Pole	112+64		
	PT	**112+79**	**PT**	
	Gravel Drive no pipe	113+49		
325/5	Underground Cable Junction Boxes	114+48		
	Pole	115+30	Pole	43248
	Begin Paved Shoulders	116+04	**Begin PIN 11258 (PPM)**	
	x-pipe	116+18	x-pipe	
		116+70	Gravel Turn Out	
326	Underground Cable Junction Boxes	117+36		
43249	Pole	117+45		
	PC	**117+76**	**PC**	
	Mailbox	118+19		
	Gravel Drive w/ pipe	118+49		
327	Pole	119+72		
328/ 43252	Pole	122+03		
	PT	**122+54**	**PT**	
		122+62	Kelly Crossing Sign	
	x-pipe	123+00	x-pipe	
329	Pole	124+51		
		125+11	St. Francis Sign	
		125+71	Four Wheeler Crossing	
	Four Wheeler Crossing	126+24		
	Begin Guard Rail	126+79		
330	Pole	127+27		
	PC	**127+70**	**PC**	
	x-pipe	127+86	x-pipe	
		129+22	St. Francis Sign	
331	Pole	129+62	Field Ent. w/ pipe	
	End Guard Rail	130+84		
	PT	**130+39**	**PT**	
332	Pole	132+04		
		133+00	**Begin PIN 11256 Level II**	
		133+34	Pole	333
43257	Pole	134+34		
43259	Pole	137+11		
43260	Pole	139+72		
	Gravel Drive no pipe	140+80		
		141+63	Field Ent. no pipe	
		141+91	Underground Cable Junction Box	103
43261	Pole	142+27		
		142+31	mailboxs	
		143+15	Paved drive no pipe	
43262	Pole	144+82		
		144+69	Begin Gravel Yard no pipe	

Pole #	Topo - Left	Station	Topo - Right	Pole #
		145+46	End Gravel Yard	
		147+20	Curve Sign	
43263	Pole	147+76		
	PC	**150+20**	**PC**	
	Pole	150+56	Pole	114
		151+07	Gravel Drive no pipe	
		152+58	Pole	43267
		152+87	Underground Cable Junction Box	102
43266	Pole	153+15		
		153+18	Gravel Drive w/ pipe	
	Woods Ent. w/ pipe	154+16		
		154+98	Gravel Drive no pipe	
		155+17	Underground Cable Junction Box	102
	x-pipe	155+36	x-pipe	
108	Pole	155+74	Pole	108S
	PT	**155+78**	**PT**	
101	Underground Cable Junction Boxes	156+38		
	Curve Sign	157+84		
43271	Pole	158+39		
	Mailbox	159+06		
	Paved Drive w/ pipe	159+29		
		159+96	Field Ent. w/ pipe	
106	Pole	161+08		
	Gravel Drive w/ pipe	162+11		
	PC	**162+50**	**PC**	
		163+23	Field Ent. no pipe	
		163+69	Pole	105
100.5	Underground Cable Junction Boxes	165+52		
	PT	**165+86**	**PT**	
		166+29	Pole	43275
103	Pole	168+19		
		168+32	Curve Sign	
	PC	**168+69**	**PC**	
		168+97	Pole	
102	Pole	170+40	Begin Guard Rail	
	Gravel Drive no pipe	170+92		
	Gravel Drive no pipe	171+59		
100/1S	Pole	171+74	Pole	43277
	Gravel Drive no pipe	172+25		
	PT	**172+52**	**PT**	
	Pole/ Underground Cable Junction Box	173+56		
	Stop Sign	173+63		
	Begin PIN 11257 Level II	173+76		
	Cottage Road, paved - no pipe	173+87	Pole	S116
		173+93	End Guard rail	
	x-pipe	174+47	x-pipe	
	Curve Sign	174+72		
99	Pole	175+69		
		176+49	Curve Sign	
		176+61	Pole	43292
	Paved Drive w/ pipe	176+66		
98	Pole	177+17		
		178+15	Begin Guard Rail	
	PC	**178+33**	**PC**	
97	Pole	178+51		
	paved drive no pipe	178+93		
	Mailboxs	179+85		

Pole #	Topo - Left	Station	Topo - Right	Pole #
	paved drive no pipe	180+00		
96	Pole	180+29		
		181+11	Scenic Turnout Sign	
95	Pole	181+67		
	Mailboxs	181+73		
	Gravel Drive no pipe	182+00		
	PT	**182+25**	**PT**	
94	Pole	183+36		
	PC	**184+07**	**PC**	
	Gravel Drive no pipe	184+13	End Guard rail	
93	Pole	185+01	Boat Landing Sign	
	Crushed Stone Drive no pipe	185+27		
	Mailboxs	186+06		
	paved drive no pipe	186+20		
92	Pole	186+71	Pole	92S
		186+86	Gravel Drive no pipe	
	PT	**187+23**	**PT**	
	Mailboxs	187+83		
	paved drive no pipe	188+01		
91	Pole	188+72		
		189+11	Pole	43301
	x-pipe	189+38	x-pipe	
	Curve Sign	189+89		
		190+08	Gravel Drive no pipe	
90	Pole	190+64		
		191+31	Paved drive no pipe	
	Scenic Turn out	191+72		
	PC	**192+28**	**PC**	
89	Pole	192+52		
	paved drive no pipe	192+79		
		193+52	Curve Sign	
88	Pole	194+19	Pole	88S
	Gravel Drive no pipe	194+52		
	Lawn Ent. no pipe	195+16		
87	Pole	195+65		
	x-pipe	195+66	x-pipe	
	Mailboxs	195+71		
	Paved Drive w/ pipe	195+96		
		196+07	Begin Guard Rail	
		196+77	Pole	43306
	Lawn Ent. w/ pipe	196+80		
83	Pole	197+45		
		198+94	End Guard rail	
	Paved Drive w/ pipe	199+07		
82	Pole	199+26	Pole	82S
	Gravel Drive no pipe	200+50		
81	Pole	201+00		
	PT	**201+93**	**PT**	
	School Bus Stop Sign	202+16	Pole	43310
80	Pole	203+20		
		203+54	Pole	318
	PC	**204+00**	**PC**	
	x-pipe	204+10	x-pipe	
		204+96	Pole	P1
72	Pole	205+43		
		205+64	Field Ent. w/ pipe	
	Gravel Drive	205+89		

Pole #	Topo - Left	Station	Topo - Right	Pole #
		207+04	Gravel Drive w/ pipe	
78	Pole	207+32	Pole	78.1
		207+50	mailboxs	
		207+77	Gravel Drive w/ pipe	
77	Pole	208+37		
	PT	**209+22**	**PT**	
		209+68	Pole	321
76	Pole	210+07		
75	Pole	211+43		
		212+19	Pole	43322
	Curve Sign	212+70		
74	Pole	213+00		
		213+30	Gravel drive	
		213+95	Gravel Drive	
73	Pole	214+60		
		214+65	Pole	43323
	PC	**215+12**	**PC**	
72	Pole	216+46		
		217+84	Begin Guard Rail	
	Gravel Drive w/ pipe	218+39		
71	Pole	218+72		
	Gravel Drive no pipe	219+80		
	Mailboxs	220+00		
	x-pipe	220+67	x-pipe	
70	Pole	220+69		
	PT	**221+39**	**PT**	
	Gravel Drive	221+40		
		221+78	Begin Guard Rail	
69	Pole	222+33		
	Mailbox	222+49		
	paved drive no pipe	222+81		
		223+85	Pole	43329
	x-pipe	224+00	x-pipe	
68	Pole	224+02		
	Crushed Stone Drive w/ pipe	225+20		
67	Pole	225+59		
		225+88	Lawn Ent. no pipe	
		226+39	Curve Sign	
		226+39	Pole	66.2
		226+65	Gravel Drive	
	Mailboxs	226+92		
	Gravel Drive w/ pipe	227+16		
66	Pole	227+47		
		228+88	Pole	43332
65	Pole	229+17	Paved drive w/ pipe	
	Gravel Drive w/ pipe	229+54		
		230+43	Gravel drive	
	PC	**231+07**	**PC**	
	Gravel Drive w/ pipe	231+21		
64	Pole	231+38	Pole	64S
63	Pole	232+69	Pole	63S
	Gravel Drive	233+08		
		233+51	Pole	43336
	Begin Gravel Drive	233+65		
62	Pole	235+15		
		235+45	Pole	43338
	End Gravel Drive	236+04	Gravel Ent.	

Pole #	Topo - Left	Station	Topo - Right	Pole #
	PT	**236+09**	**PT**	
	Paved Drive	236+58		
	End	**237+35**	**Project**	
	Curve Sign	237+52	Pole	
		237+59	Pole	
61	Pole	237+62		

Striping Diagram

11256.00, 11257.00
11258.00, 11259.00
St. John - St. Francis
Rte. 161
Level II, PPM

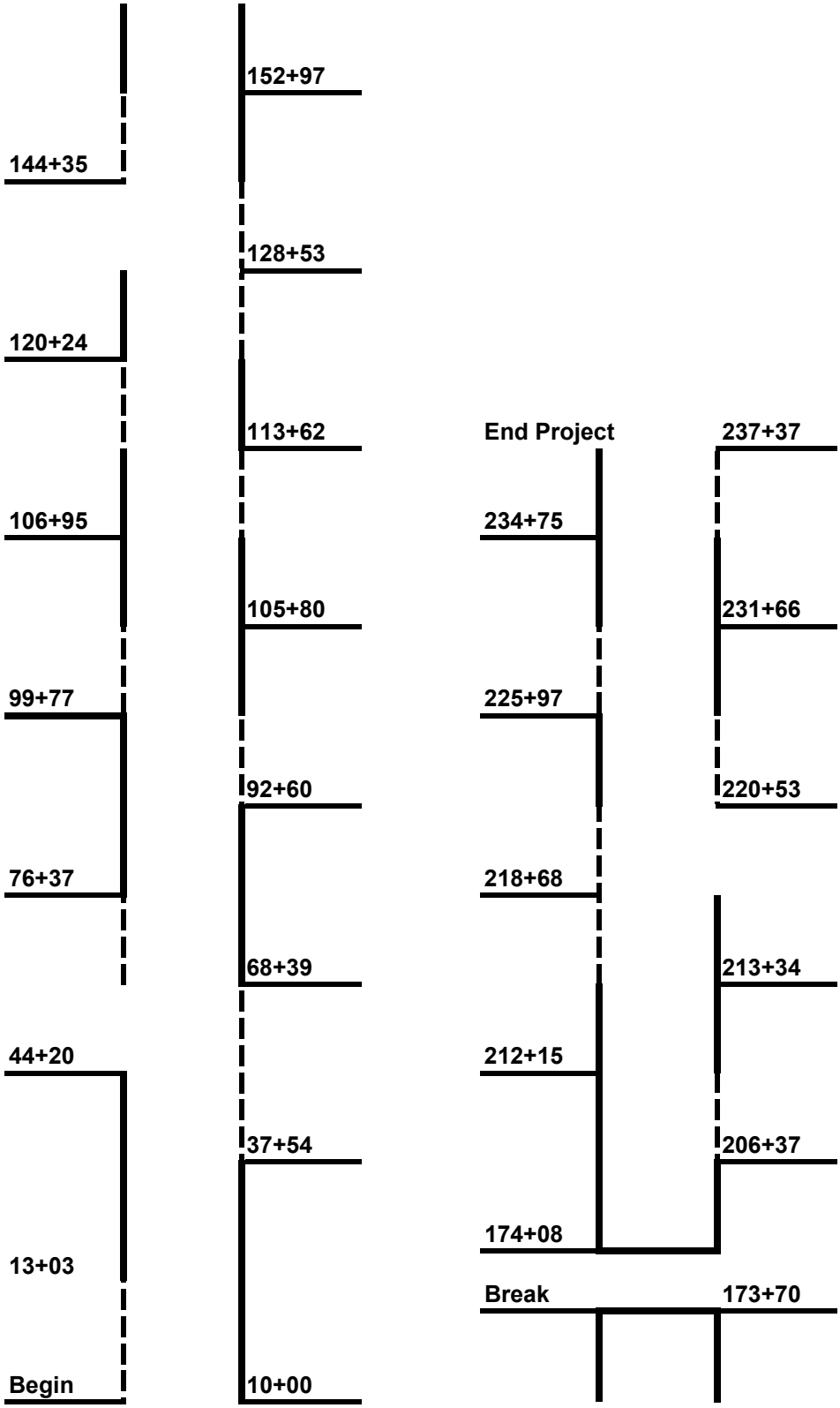

11526.00, 11527.00
11528.00, 11529.00
St. John - St. Francis
Rte. 161
Level II, PPM

PAVEMENT CROSS SLOPE INFORMATION

	% Slope LT.	Inches	Station	Inches	%Slope RT.	
CURVE # 1						
35 MPH						
Left	-2.08%	-2 6/8	18+00	-2 6/8	-2.08%	Begin Transition
	-2.81%	-3 6/8	18+50	- 3/8	-0.31%	
	-3.54%	-4 5/8	19+00	1 7/8	1.46%	
	-4.27%	-5 5/8	19+50	4 2/8	3.23%	
	-5.00%	-6 5/8	20+00	6 5/8	5.00%	Begin Full Bank
	-5.00%	-6 5/8	22+50	6 5/8	5.00%	End Full Bank
	-4.27%	-5 5/8	23+00	4 2/8	3.23%	
	-3.54%	-4 5/8	23+50	1 7/8	1.46%	
	-2.81%	-3 6/8	24+00	- 3/8	-0.31%	
	-2.08%	-2 6/8	24+50	-2 6/8	-2.08%	End Transition
CURVE # 2						
35 MPH						
Left	-2.08%	-2 6/8	25+50	-2 6/8	-2.08%	Begin Transition
	-2.61%	-3 4/8	26+00	- 5/8	-0.51%	
	-3.14%	-4 1/8	26+50	1 3/8	1.06%	
	-3.67%	-4 7/8	27+00	3 4/8	2.63%	
	-4.20%	-5 4/8	27+50	5 4/8	4.20%	Begin Full Bank
	-4.20%	-5 4/8	30+50	5 4/8	4.20%	End Full Bank
	-3.67%	-4 7/8	31+00	3 4/8	2.63%	
	-3.14%	-4 1/8	31+50	1 3/8	1.06%	
	-2.61%	-3 4/8	32+00	- 5/8	-0.51%	
	-2.08%	-2 6/8	32+50	-2 6/8	-2.08%	End Transition
CURVE # 3						
35 MPH						
Right	-2.08%	-2 6/8	33+50	-2 6/8	-2.08%	Begin Transition
	-0.79%	-1	34+00	-3 1/8	-2.34%	
	0.51%	5/8	34+50	-3 3/8	-2.59%	
	1.80%	2 3/8	35+00	-3 6/8	-2.85%	
	3.10%	4 1/8	35+50	-4 1/8	-3.10%	Begin Full Bank
	3.10%	4 1/8	39+50	-4 1/8	-3.10%	End Full Bank
	1.80%	2 3/8	40+00	-3 6/8	-2.85%	
	0.51%	5/8	40+50	-3 3/8	-2.59%	
	-0.79%	-1	41+00	-3 1/8	-2.34%	
	-2.08%	-2 6/8	41+50	-2 6/8	-2.08%	End Transition

PAVEMENT CROSS SLOPE INFORMATION

	% Slope LT.	Inches	Station	Inches	%Slope RT.	
CURVE # 4						
35 MPH						
Right	-2.08%	-2 6/8	49+00	-2 6/8	-2.08%	Begin Transition
	-0.97%	-1 2/8	49+50	-2 7/8	-2.16%	
	0.14%	2/8	50+00	-3	-2.23%	
	1.26%	1 5/8	50+50	-3	-2.30%	
	2.37%	3 1/8	51+00	-3 1/8	-2.37%	Begin Full Bank
	2.37%	3 1/8	54+50	-3 1/8	-2.37%	End Full Bank
	1.26%	1 5/8	55+00	-3	-2.30%	
	0.14%	2/8	55+50	-3	-2.23%	
	-0.97%	-1 2/8	56+00	-2 7/8	-2.16%	
	-2.08%	-2 6/8	56+50	-2 6/8	-2.08%	End Transition
CURVE # 5						
35 MPH						
Right	-2.08%	-2 6/8	57+00	-2 6/8	-2.08%	Begin Transition
	-1.06%	-1 3/8	57+50	-2 6/8	-2.06%	
	-0.04%	-0	58+00	-2 6/8	-2.04%	
	0.98%	1 2/8	58+50	-2 5/8	-2.02%	
	2.00%	2 5/8	59+00	-2 5/8	-2.00%	Begin Full Bank
	2.00%	2 5/8	61+50	-2 5/8	-2.00%	End Full Bank
	0.98%	1 2/8	62+00	-2 5/8	-2.02%	
	-0.04%	-0	62+50	-2 6/8	-2.04%	
	-1.06%	-1 3/8	63+00	-2 6/8	-2.06%	
	-2.08%	-2 6/8	63+50	-2 6/8	-2.08%	End Transition
CURVE # 6						
35 MPH						
Left	-2.08%	-2 6/8	70+00	-2 6/8	-2.08%	Begin Transition
	-2.06%	-2 6/8	70+50	-1 3/8	-1.06%	
	-2.04%	-2 6/8	71+00	-0	-0.04%	
	-2.02%	-2 5/8	71+50	1 2/8	0.98%	
	-2.00%	-2 5/8	72+00	2 5/8	2.00%	Begin Full Bank
	-2.00%	-2 5/8	77+50	2 5/8	2.00%	End Full Bank
	-2.02%	-2 5/8	78+00	1 2/8	0.98%	
	-2.04%	-2 6/8	78+50	-0	-0.04%	
	-2.06%	-2 6/8	79+00	-1 3/8	-1.06%	
	-2.08%	-2 6/8	79+50	-2 6/8	-2.08%	End Transition

PAVEMENT CROSS SLOPE INFORMATION

	% Slope LT.	Inches	Station	Inches	%Slope RT.	
CURVE # 7						
50 MPH						
Right	-2.08%	-2 6/8	80+00	-2 6/8	-2.08%	Begin Transition
	-0.56%	- 6/8	80+50	-3 3/8	-2.56%	
	0.96%	1 2/8	81+00	-4	-3.04%	
	2.48%	3 2/8	81+50	-4 5/8	-3.52%	
	4.00%	5 2/8	82+00	-5 2/8	-4.00%	Begin Full Bank
	4.00%	5 2/8	84+50	-5 2/8	-4.00%	End Full Bank
	2.48%	3 2/8	85+00	-4 5/8	-3.52%	
	0.96%	1 2/8	85+50	-4	-3.04%	
	-0.56%	- 6/8	86+00	-3 3/8	-2.56%	
	-2.08%	-2 6/8	86+50	-2 6/8	-2.08%	End Transition
CURVE # 8						
50 MPH						
Left	-2.08%	-2 6/8	87+50	-2 6/8	-2.08%	Begin Transition
	-2.76%	-3 5/8	88+00	- 4/8	-0.36%	
	-3.44%	-4 4/8	88+50	1 6/8	1.36%	
	-4.12%	-5 4/8	89+00	4 1/8	3.08%	
	-4.80%	-6 3/8	89+50	6 3/8	4.80%	Begin Full Bank
	-4.80%	-6 3/8	92+50	6 3/8	4.80%	End Full Bank
	-4.12%	-5 4/8	93+00	4 1/8	3.08%	
	-3.44%	-4 4/8	93+50	1 6/8	1.36%	
	-2.76%	-3 5/8	94+00	- 4/8	-0.36%	
	-2.08%	-2 6/8	94+50	-2 6/8	-2.08%	End Transition
CURVE # 9						
50 MPH						
Left	-2.08%	-2 6/8	100+50	-2 6/8	-2.08%	Begin Transition
	-2.56%	-3 3/8	101+00	- 6/8	-0.56%	
	-3.04%	-4	101+50	1 2/8	0.96%	
	-3.52%	-4 5/8	102+00	3 2/8	2.48%	
	-4.00%	-5 2/8	102+50	5 2/8	4.00%	Begin Full Bank
	-4.00%	-5 2/8	106+50	5 2/8	4.00%	End Full Bank
	-3.52%	-4 5/8	107+00	3 2/8	2.48%	
	-3.04%	-4	107+50	1 2/8	0.96%	
	-2.56%	-3 3/8	108+00	- 6/8	-0.56%	
	-2.08%	-2 6/8	108+50	-2 6/8	-2.08%	End Transition

PAVEMENT CROSS SLOPE INFORMATION

	% Slope LT.	Inches	Station	Inches	%Slope RT.	
CURVE # 10						
50 MPH						
Right	-2.08%	-2 6/8	108+50	-2 6/8	-2.08%	Begin Transition
	-0.69%	- 7/8	109+00	-3 2/8	-2.44%	
	0.71%	7/8	109+50	-3 5/8	-2.79%	
	2.10%	2 6/8	110+00	-4 1/8	-3.15%	
	3.50%	4 5/8	110+50	-4 5/8	-3.50%	Begin Full Bank
	3.50%	4 5/8	112+50	-4 5/8	-3.50%	End Full Bank
	2.10%	2 6/8	113+00	-4 1/8	-3.15%	
	0.71%	7/8	113+50	-3 5/8	-2.79%	
	-0.69%	- 7/8	114+00	-3 2/8	-2.44%	
	-2.08%	-2 6/8	114+50	-2 6/8	-2.08%	End Transition
CURVE # 11						
50 MPH						
Right	-2.08%	-2 6/8	116+50	-2 6/8	-2.08%	Begin Transition
	-0.26%	- 3/8	117+00	-3 6/8	-2.86%	
	1.56%	2	117+50	-4 6/8	-3.64%	
	3.38%	4 4/8	118+00	-5 7/8	-4.42%	
	5.20%	6 7/8	118+50	-6 7/8	-5.20%	Begin Full Bank
	5.20%	6 7/8	122+00	-6 7/8	-5.20%	End Full Bank
	3.38%	4 4/8	122+50	-5 7/8	-4.42%	
	1.56%	2	123+00	-4 6/8	-3.64%	
	-0.26%	- 3/8	123+50	-3 6/8	-2.86%	
	-2.08%	-2 6/8	124+00	-2 6/8	-2.08%	End Transition
CURVE # 12						
50 MPH						
Right	-2.08%	-2 6/8	126+00	-2 6/8	-2.08%	Begin Transition
	-0.69%	- 7/8	126+50	-3 2/8	-2.44%	
	0.71%	7/8	127+00	-3 5/8	-2.79%	
	2.10%	2 6/8	127+50	-4 1/8	-3.15%	
	3.50%	4 5/8	128+00	-4 5/8	-3.50%	Begin Full Bank
	3.50%	4 5/8	130+00	-4 5/8	-3.50%	End Full Bank
	2.10%	2 6/8	130+50	-4 1/8	-3.15%	
	0.71%	7/8	131+00	-3 5/8	-2.79%	
	-0.69%	- 7/8	131+50	-3 2/8	-2.44%	
	-2.08%	-2 6/8	132+00	-2 6/8	-2.08%	End Transition

PAVEMENT CROSS SLOPE INFORMATION

	% Slope LT.	Inches	Station	Inches	%Slope RT.	
CURVE # 13						
50 MPH						
Left	-2.08%	-2 6/8	148+50	-2 6/8	-2.08%	Begin Transition
	-2.91%	-3 7/8	149+00	- 2/8	-0.21%	
	-3.74%	-5	149+50	2 2/8	1.66%	
	-4.57%	-6	150+00	4 5/8	3.53%	
	-5.40%	-7 1/8	150+50	7 1/8	5.40%	Begin Full Bank
	-5.40%	-7 1/8	155+50	7 1/8	5.40%	End Full Bank
	-4.57%	-6	156+00	4 5/8	3.53%	
	-3.74%	-5	156+50	2 2/8	1.66%	
	-2.91%	-3 7/8	157+00	- 2/8	-0.21%	
	-2.08%	-2 6/8	157+50	-2 6/8	-2.08%	End Transition
CURVE # 14						
50 MPH						
Left	-2.08%	-2 6/8	161+00	-2 6/8	-2.08%	Begin Transition
	-2.76%	-3 5/8	161+50	- 4/8	-0.36%	
	-3.44%	-4 4/8	162+00	1 6/8	1.36%	
	-4.12%	-5 4/8	162+50	4 1/8	3.08%	
	-4.80%	-6 3/8	163+00	6 3/8	4.80%	Begin Full Bank
	-4.80%	-6 3/8	165+50	6 3/8	4.80%	End Full Bank
	-4.12%	-5 4/8	166+00	4 1/8	3.08%	
	-3.44%	-4 4/8	166+50	1 6/8	1.36%	
	-2.76%	-3 5/8	167+00	- 4/8	-0.36%	
	-2.89%	-3 6/8	167+50	- 3/8	-0.24%	End Transition
CURVE # 15						
50 MPH						
Left	-2.76%	-3 5/8	167+00	- 4/8	-0.36%	Begin Transition
	-2.89%	-3 6/8	167+50	- 3/8	-0.24%	
	-3.69%	-4 7/8	168+00	2 1/8	1.61%	
	-4.50%	-5 7/8	168+50	4 4/8	3.45%	
	-5.30%	-7	169+00	7	5.30%	Begin Full Bank
	-5.30%	-7	172+00	7	5.30%	End Full Bank
	-4.67%	-6 1/8	172+50	5 1/8	3.88%	
	-4.03%	-5 3/8	173+00	3 2/8	2.47%	
	-3.40%	-4 4/8	173+50	1 3/8	1.05%	
	-2.76%	-3 5/8	174+00	- 4/8	-0.36%	End Transition

PAVEMENT CROSS SLOPE INFORMATION

	% Slope LT.	Inches	Station	Inches	%Slope RT.	
CURVE # 16						
50 MPH						
Right	-2.08%	-2 6/8	177+00	-2 6/8	-2.08%	Begin Transition
	-0.06%	- 1/8	177+50	-4	-3.06%	
	1.96%	2 5/8	178+00	-5 3/8	-4.04%	
	3.98%	5 2/8	178+50	-6 5/8	-5.02%	
	6.00%	7 7/8	179+00	-7 7/8	-6.00%	Begin Full Bank
	6.00%	7 7/8	182+00	-7 7/8	-6.00%	End Full Bank
	3.65%	4 7/8	182+50	-4 7/8	-3.65%	
	1.30%	1 6/8	183+00	-1 6/8	-1.30%	
	-1.05%	-1 3/8	183+50	1 3/8	1.05%	
	-3.40%	-4 4/8	184+00	4 4/8	3.40%	End Transition
CURVE # 17						
50 MPH						
Left	3.65%	4 7/8	182+50	-4 7/8	-3.65%	Begin Transition
	1.30%	1 6/8	183+00	-1 6/8	-1.30%	
	-1.05%	-1 3/8	183+50	1 3/8	1.05%	
	-3.40%	-4 4/8	184+00	4 4/8	3.40%	
	-5.75%	-7 5/8	184+50	7 5/8	5.75%	Begin Full Bank
	-5.75%	-7 5/8	186+50	7 5/8	5.75%	End Full Bank
	-4.83%	-6 3/8	187+00	5	3.79%	
	-3.92%	-5 1/8	187+50	2 3/8	1.83%	
	-3.00%	-4	188+00	- 1/8	-0.13%	
	-2.08%	-2 6/8	188+50	-2 6/8	-2.08%	End Transition
CURVE # 18						
50 MPH						
Left	-2.08%	-2 6/8	191+00	-2 6/8	-2.08%	Begin Transition
	-2.61%	-3 4/8	191+50	- 5/8	-0.52%	
	-3.13%	-4 1/8	192+00	1 3/8	1.04%	
	-3.65%	-4 7/8	192+50	3 4/8	2.61%	
	-4.17%	-5 4/8	193+00	5 4/8	4.17%	Begin Full Bank
	-4.17%	-5 4/8	201+50	5 4/8	4.17%	End Full Bank
	-2.54%	-3 3/8	202+00	3 3/8	2.54%	
	-0.91%	-1 2/8	202+50	1 2/8	0.91%	
	0.71%	7/8	203+00	- 7/8	-0.71%	
	2.34%	3 1/8	203+50	-3 1/8	-2.34%	End Transition

PAVEMENT CROSS SLOPE INFORMATION

	% Slope LT.	Inches	Station	Inches	%Slope RT.	
CURVE # 19						
50 MPH						
Right	-0.91%	-1 2/8	202+50	1 2/8	0.91%	Begin Transition
	0.71%	7/8	203+00	- 7/8	-0.71%	
	2.34%	3 1/8	203+50	-3 1/8	-2.34%	
	3.97%	5 2/8	204+00	-5 2/8	-3.97%	
	5.60%	7 3/8	204+50	-7 3/8	-5.60%	Begin Full Bank
	5.60%	7 3/8	208+50	-7 3/8	-5.60%	End Full Bank
	3.68%	4 7/8	209+00	-6 2/8	-4.72%	
	1.76%	2 3/8	209+50	-5 1/8	-3.84%	
	-0.16%	- 2/8	210+00	-3 7/8	-2.96%	
	-2.08%	-2 6/8	210+50	-2 6/8	-2.08%	End Transition
CURVE # 20						
50 MPH						
Left	-2.08%	-2 6/8	213+50	-2 6/8	-2.08%	Begin Transition
	-2.32%	-3	214+00	-1 1/8	-0.81%	
	-2.56%	-3 3/8	214+50	5/8	0.47%	
	-2.79%	-3 5/8	215+00	2 2/8	1.75%	
	-3.03%	-4	215+50	4	3.03%	Begin Full Bank
	-3.03%	-4	221+00	4	3.03%	End Full Bank
	-2.79%	-3 5/8	221+50	2 2/8	1.75%	
	-2.56%	-3 3/8	222+00	5/8	0.47%	
	-2.32%	-3	222+50	-1 1/8	-0.81%	
	-2.08%	-2 6/8	223+00	-2 6/8	-2.08%	End Transition
CURVE # 21						
50 MPH						
Left	-2.08%	-2 6/8	229+50	-2 6/8	-2.08%	Begin Transition
	-3.04%	-4	230+00	- 1/8	-0.09%	
	-3.99%	-5 2/8	230+50	2 4/8	1.91%	
	-4.95%	-6 4/8	231+00	5 1/8	3.90%	
	-5.90%	-7 6/8	231+50	7 6/8	5.90%	Begin Full Bank
	-5.90%	-7 6/8	235+50	7 6/8	5.90%	End Full Bank
	-4.95%	-6 4/8	236+00	5 1/8	3.90%	
	-3.99%	-5 2/8	236+50	2 4/8	1.91%	
	-3.04%	-4	237+00	- 1/8	-0.09%	
	-2.08%	-2 6/8	237+50	-2 6/8	-2.08%	End Transition

CONSTRUCTION NOTES

201.23 REMOVING SINGLE TREE TOP ONLY

Station	Side	Offset (feet)	Size (inches)	Quantity	Description
91+11.0	RT	20.0	18	1	Fur
91+54.0	RT	21.0	18	1	Fur
91+81.0	RT	25.0	18	1	Fur
92+84.0	RT	23.0	40	1	Pine
92+84.0	RT	28.0	24	1	Pine

201.24 REMOVING STUMP

Station	Side	Offset (feet)	Size (inches)	Quantity	Description
91+11.0	RT	20.0	18	1	Fur
91+54.0	RT	21.0	18	1	Fur
91+81.0	RT	25.0	18	1	Fur
92+84.0	RT	23.0	40	1	Pine
92+84.0	RT	28.0	24	1	Pine

202.203 PAVEMENT BUTT JOINTS

Side	Station	Station	Length (feet)	Width (feet)	Area (ft/2)	
	10+00.0	10+50.0	50.0	22.0	1100.0	Mainline
	236+85.0	237+35.0	50.0	22.0	1100.0	Mainline
			0.0		0.0	
LT	10+50.0		15.0	1.5	22.5	Paved Drive
LT	13+33.0		26.0	1.5	39.0	Paved Drive
RT	22+62.0		26.0	1.5	39.0	Paved Drive
LT	23+20.0		16.0	1.5	24.0	Paved Drive
RT	23+26.0		31.0	1.5	46.5	Paved Drive
LT	23+60.0		12.0	1.5	18.0	Paved Drive
RT	28+54.0		68.0	1.5	102.0	Paved Drive
RT	29+44.0		24.0	1.5	36.0	Paved Drive
LT	30+66.0		26.0	1.5	39.0	Paved Drive
RT	30+66.0		40.0	1.5	60.0	Paved Drive
LT	32+00.0		26.0	1.5	39.0	Paved Drive
RT	32+80.0		30.0	1.5	45.0	Paved Drive
RT	33+20.0		32.0	1.5	48.0	Paved Drive
LT	52+65.0		22.0	1.5	33.0	Paved Drive
LT	65+48.0		28.0	1.5	42.0	Paved Drive
LT	66+59.0		24.0	1.5	36.0	Paved Drive
RT	68+87.0		21.0	1.5	31.5	Paved Drive
LT	71+74.0		26.0	1.5	39.0	Paved Drive

CONSTRUCTION NOTES

202.203 PAVEMENT BUTT JOINTS cont.

RT	97+05.0	20.0	1.5	30.0	Paved Drive
RT	97+66.0	16.0	1.5	24.0	Paved Drive

204.21 ADD SHLD AGG TO EXIST SHLD, TRUCK MEASURE

RIGHT SHOULDER

Station	Width (feet)	Station	Width (feet)	
133+00.0	3.0	237+35.0	3.0	
		Length (feet)	Avg. Width (feet)	Area(ft/2)
		10,435.0	3.0	31305.0

LEFT SHOULDER

Station	Width (feet)	Station	Width (feet)	
133+00.0	3.0	237+35.0	3.0	
		Length (feet)	Avg. Width (feet)	Area(ft/2)
		10,435.0	3.0	31305.0

204.41 REHAB OF EXISTING SHOULDERS, PLAN QUANTITY

RIGHT SHOULDER

Station	Width (feet)	Station	Width (feet)	
10+00.0	4.0	16+35.0	4.0	
		Length (feet)	Avg. Width (feet)	Area(ft/2)
		635.0	4.0	2540.0

Station	Width (feet)	Station	Width (feet)	
19+00.0	4.0	23+00.0	4.0	
		Length (feet)	Avg. Width (feet)	Area(ft/2)
		400.0	4.0	1600.0

CONSTRUCTION NOTES

204.41 REHAB OF EXISTING SHOULDERS, PLAN QUANTITY cont.

LEFT SHOULDER

Station	Width (feet)	Station	Width (feet)	
10+00.0	4.0	16+87.0	4.0	
		Length (feet)	Avg. Width (feet)	Area(ft/2)
		687.0	4.0	2748.0

Station	Width (feet)	Station	Width (feet)	
20+00.0	4.0	23+00.0	4.0	
		Length (feet)	Avg. Width (feet)	Area(ft/2)
		300.0	4.0	1200.0

Rehab Shld. In G.R. Areas

# of Feet	Width (feet)	Area(ft/2)
1,862.5	5.0	9312.5

211.20 INSLOPE EXCAVATION

Side	Station	Station	Length (feet)
Right	10+00.0	11+52.0	152.0
Right	13+26.0	14+36.0	110.0
Right	14+52.0	15+57.0	105.0
Right	15+81.0	16+51.0	70.0
Right	19+05.0	22+21.0	316.0
Right	22+30.0	22+54.0	24.0
Right	22+74.0	23+16.0	42.0
Right	23+46.0	25+91.0	245.0
Right	26+25.0	27+15.0	90.0
Right	27+44.0	28+26.0	82.0
Right	28+88.0	29+33.0	45.0
Right	29+52.0	30+53.0	101.0
Right	30+80.0	31+97.0	117.0
Right	32+10.0	32+66.0	56.0
Right	50+12.0	50+36.0	24.0
Right	51+72.0	52+67.0	95.0
Right	55+83.0	58+23.0	240.0
Right	58+40.0	59+70.0	130.0
Right	62+05.0	65+36.0	331.0
Right	65+55.0	66+52.0	97.0

CONSTRUCTION NOTES

211.20 INSLOPE EXCAVATION cont.

Side	Station	Station	Length (feet)
Right	66+75.0	68+75.0	200.0
Right	68+95.0	70+29.0	134.0
Right	71+46.0	71+79.0	33.0
Right	71+97.0	76+78.0	481.0
Right	76+94.0	77+36.0	42.0
Right	77+85.0	78+96.0	111.0
Right	80+56.0	93+00.0	1244.0
Right	95+95.0	96+93.0	98.0
Right	97+10.0	97+56.0	46.0
Right	97+73.0	99+53.0	180.0
Right	100+32.0	112+78.0	1246.0
Right	117+80.0	125+55.0	775.0
Right	125+77.0	129+50.0	373.0
Right	129+93.0	132+75.0	282.0
Left	12+61.0	13+19.0	58.0
Left	13+44.0	14+65.0	121.0
Left	16+52.0	17+27.0	75.0
Left	19+78.0	20+26.0	48.0
Left	21+50.0	22+39.0	89.0
Left	28+52.0	29+20.0	68.0
Left	29+50.0	30+56.0	106.0
Left	30+79.0	31+90.0	111.0
Left	32+09.0	32+96.0	87.0
Left	36+58.0	40+88.0	430.0
Left	45+00.0	45+47.0	47.0
Left	62+85.0	63+71.0	86.0
Left	75+01.0	78+90.0	389.0
Left	81+70.0	83+92.0	222.0
Left	92+47.0	94+12.0	165.0
Left	94+38.0	97+28.0	290.0
Left	105+86.0	106+35.0	49.0
Left	107+50.0	109+39.0	189.0
Left	118+65.0	125+63.0	698.0
Left	126+43.0	126+77.0	34.0
Left	130+83.0	133+00.0	217.0

CONSTRUCTION NOTES

211.22 INSLOPE EXCAVATION, GUARDRAIL

Side	Station	Station	Length (feet)
Right	16+51.0	18+86.0	235.0
Left	17+27.0	19+78.0	251.0
Left	126+77.0	130+83.0	406.0

211.30 DITCH EXCAVATION

Side	Station	Station	Length (feet)	Comments
Right	31+97.0	32+10.0	13.0	
Right	34+15.0	34+48.0	33.0	
Right	34+77.0	35+69.0	92.0	
Right	35+94.0	40+00.0	406.0	0 Ditch at 40+00
Right	40+30.0	44+18.0	388.0	0 Ditch at 40+30
Right	44+38.0	48+57.0	419.0	
Right	48+72.0	50+12.0	140.0	
Right	52+67.0	55+14.0	247.0	
Right	55+40.0	55+54.0	14.0	
Right	60+00.0	62+05.0	205.0	
Right	78+96.0	80+56.0	160.0	0 ditch at 78+96
Right	93+00.0	95+95.0	295.0	
Right	112+78.0	116+10.0	332.0	
Right	132+75.0	133+00.0	25.0	
Left	10+00.0	10+40.0	40.0	
Left	10+60.0	12+34.0	174.0	0 ditch at 12+34
Left	14+65.0	16+52.0	187.0	
Left	20+26.0	21+50.0	124.0	0 ditch at 21+50
Left	22+62.0	23+06.0	44.0	0 ditch at 22+62
Left	23+28.0	23+43.0	15.0	
Left	23+67.0	25+04.0	137.0	
Left	25+28.0	25+60.0	32.0	
Left	25+89.0	26+63.0	74.0	
Left	26+97.0	28+52.0	155.0	
Left	33+43.0	35+32.0	189.0	0 ditch at 35+32
Left	35+84.0	36+58.0	74.0	0 ditch at 35+84
Left	41+25.0	44+80.0	355.0	0 ditch at 44+80
Left	45+75.0	46+56.0	81.0	
Left	46+82.0	47+22.0	40.0	
Left	47+50.0	49+93.0	243.0	
Left	50+27.0	51+65.0	138.0	
Left	51+89.0	52+53.0	64.0	

CONSTRUCTION NOTES

211.30 DITCH EXCAVATION cont.

Side	Station	Station	Length (feet)	Comments
Left	52+74.0	54+04.0	130.0	0 ditch at 54+04
Left	54+32.0	55+67.0	135.0	0 ditch at 54+32
Left	55+86.0	58+12.0	226.0	
Left	58+41.0	60+61.0	220.0	
Left	61+41.0	62+62.0	121.0	0 ditch at 62+62
Left	64+00.0	64+33.0	33.0	pole problems in this section
Left	64+52.0	64+90.0	38.0	
Left	65+14.0	65+31.0	17.0	
Left	65+61.0	66+43.0	82.0	
Left	66+72.0	68+15.0	143.0	
Left	68+44.0	69+56.0	112.0	
Left	69+75.0	70+06.0	31.0	
Left	70+23.0	70+77.0	54.0	
Left	70+96.0	71+57.0	61.0	
Left	71+86.0	73+65.0	179.0	
Left	73+88.0	74+73.0	85.0	
Left	78+90.0	79+83.0	93.0	0 ditch at 78+90
Left	80+05.0	80+55.0	50.0	
Left	80+84.0	81+70.0	86.0	
Left	83+92.0	84+28.0	36.0	reditch, fill in bottom with waste
Left	84+52.0	84+89.0	37.0	
Left	85+19.0	86+25.0	106.0	
Left	91+61.0	92+47.0	86.0	swale
Left	97+66.0	98+61.0	95.0	
Left	98+88.0	105+57.0	669.0	0 ditch at 105+57
Left	106+35.0	107+50.0	115.0	
Left	109+39.0	110+14.0	75.0	0 ditch at 10+14
Left	110+80.0	113+34.0	254.0	0 ditch at 110+80, 0 ditch at 133+34
Left	113+61.0	118+27.0	466.0	0 ditch at 113+61
Left	125+63.0	126+14.0	51.0	0 ditch at 126+14

304.103 AGGR SUBB CRS-GRAVEL-TRUCK MS

Use in driveways and field entrances as needed
64 Gravel Drives and Field Entrances
Also for use at heave over x-pipe - Station 123+00

CONSTRUCTION NOTES

309.36 FULL DEPTH RECYCLED PAVEMENT W / FOAMED ASPHALT 6" DEPTH

Start Station	End Station	Length (feet)	Width (feet)
23+00.0	116+50.0	9350.0	30.0

403.209 HOT MIX ASPHALT 9.5 MM (INCIDENTALS)

Use for paved drives and paved driveway aprons as directed by the Resident Inspector

Paved Drives = 38
Aprons = 64

403.210 HOT MIX ASPHALT 9.5 MM

Depth (inches)

	Section 1 - Shim & Overlay with Rehab. Shlds.
1 1/4"	Mainline
2"	Rehab Shoulders
	Section 2 - Foamed Asphalt Area
1 1/4"	Surface course - mainline & shoulders
1 1/4"	Base course - mainline & shoulders
	Section 3 - Overlay with paved shoulders
3/4"	Surface course - mainline & shoulders
	Section 4 - Overlay with gravel shoulders
3/4"	Surface course - mainline only

403.211 HOT MIX ASPHALT 9.5 MM (SHIM)

Section 1 - Shim & Overlay with Rehab. Shlds.
Variable depth used on mainline

Section 3 - Overlay with paved shoulders
Variable depth shim course

Section 4 - Overlay with gravel shoulders
Variable depth used on mainline

CONSTRUCTION NOTES

411.10 UNTREAT AGGR SURF CRS, TR MEAS

For use in driveways and field entrances as needed
64 Gravel Drives and Field Entrances
The majority of the estimated quantity (1400 cubic yards) is for
re-establishing proper cross slope on mainline and shoulders prior to reclaiming
The material for mainline and shoulders shall be pavement salvage from
the MaineDOT Maintenance Lot in Fort Kent.

411.12 CRUSHED STONE SURFACE

For use in crushed stone driveways as directed by the Resident Inspector
3 Crushed stone drives

603.16 15" CULV PIPE OPTION I

Station	Length	Side
10+50.0	30.0	LT
23+20.0	30.0	LT
23+60.0	30.0	LT
34+65.0	30.0	RT
35+82.0	30.0	RT
46+68.0	30.0	LT
47+35.0	30.0	LT
50+08.0	40.0	LT
50+64.0	30.0	LT
51+79.0	30.0	LT
55+26.0	30.0	RT
55+74.0	30.0	LT
61+10.0	78.0	LT
79+95.0	30.0	LT
80+68.0	30.0	LT
85+02.0	34.0	LT
97+05.0	36.0	RT
97+66.0	36.0	RT
98+76.0	30.0	LT

CONSTRUCTION NOTES

603.17 18" CULV PIPE OPTION I

Station	Length	Side
25+16.0	30.0	LT
25+71.0	32.0	LT
26+82.0	44.0	LT
52+65.0	30.0	LT
58+26.0	32.0	LT
64+42.0	30.0	LT
65+04.0	36.0	LT
65+48.0	36.0	LT
66+59.0	30.0	LT
68+28.0	30.0	LT
69+68.0	30.0	LT
70+16.0	30.0	LT
70+87.0	30.0	LT
71+74.0	30.0	LT
73+77.0	30.0	LT
84+41.0	30.0	LT

603.171 18" CORRUGATED METAL PIPE

Station	Length	Side
25+03.0	6.0	LT
52+91.0	4.0	LT
52+91.0	4.0	RT

603.179 18" CULV PIPE OPTION III

Station	Length	Side
44+58.0	48.0	x-pipe
48+95.0	48.0	x-pipe
55+58.0	48.0	x-pipe
91+75.0	50.0	x-pipe

CONSTRUCTION NOTES

603.199 24" CULV PIPE OPTION III

Station	Length	Side
62+02.0	48.0	x-pipe
96+31.0	64.0	x-pipe
102+68.0	54.0	x-pipe
108+16.0	60.0	x-pipe
112+28.0	48.0	x-pipe
116+18.0	48.0	x-pipe

605.12 15" UNDERDRAIN TYPE C

Side	Start Station	End Station
RT	32+10.0	34+16.0

606.23 GR TY 3C - SINGLE RAIL

Side	Start Station	End Station	Length	# of Rails
LT	82+11.5	83+49.0	137.5	11
RT	81+77.5	91+02.5	925.0	74
RT	102+53.5	105+41.0	287.5	23
RT	107+54.5	112+67.0	512.5	41

606.35 GR DELINEATOR POST

For use at guardrail end treatments and underdrain outlets. Install as directed in the field by the Resident Inspector

606.754 WIDEN SHLD. FOR G.R. 350 FLARED TERMINAL

Side	Start Station	End Station
LT	81+74.0	82+11.5
LT	83+49.0	83+86.5
RT	81+40.0	81+77.5
RT	91+02.5	91+40.0
RT	102+16.0	102+53.5
RT	105+41.0	105+78.5
RT	107+17.0	107+54.5
RT	112+67.0	113+04.5

CONSTRUCTION NOTES

606.79 GUARDRAIL 350 FLARED TERMINAL

Side	Start Station	End Station
RT	16+49.0	16+86.5
LT	17+28.0	17+65.5
LT	19+39.5	19+77.0
LT	81+74.0	82+11.5
LT	83+49.0	83+86.5
RT	81+40.0	81+77.5
RT	91+02.5	91+40.0
RT	102+16.0	102+53.5
RT	105+41.0	105+78.5
RT	107+17.0	107+54.5
RT	112+67.0	113+04.5
LT	126+77.0	127+14.5
LT	130+39.5	130+77.0

609.31 CURB TYPE 3

Side	Station	Station	Length (feet)
Right	13+26.0	14+36.0	110.0
Right	14+52.0	15+57.0	105.0
Right	15+81.0	16+51.0	70.0
Right	20+85.0	22+21.0	136.0
Right	22+30.0	22+54.0	24.0
Right	22+74.0	23+16.0	42.0
Right	28+88.0	29+33.0	60.0
Right	29+52.0	30+53.0	101.0
Right	33+35.0	33+97.0	62.0
Left	12+61.0	13+19.0	58.0
Left	13+44.0	14+65.0	121.0
Left	21+50.0	22+39.0	89.0
Left	29+50.0	30+56.0	106.0
Left	62+85.0	63+71.0	86.0
Left	86+65.0	90+00.0	335.0
Left	105+86.0	106+35.0	49.0

610.08 PLAIN RIPRAP

For use at x-pipes as directed by the Resident Inspector

CONSTRUCTION NOTES

610.16 HEAVY RIPRAP

For use at washout along the river bank

Side	Station	Station
Right	217+45.0	217+80.0

610.18 STONE DITCH PROTECTION

Side	Station	Station	Length (feet)	Width(feet)	Depth (feet)
LT	149+80.0	155+30.0	550.0	6	1

613.319 EROSION CONTROL BLANKET

Install at all ditch locations as directed by the Resident Inspector

615.07 LOAM

For use on lawns as directed by the Resident Inspector

631.14 GRADER (INC OPERATOR)

For removing vegetation and other unsuitable material from shoulders prior to foaming operations

653.22 2" POLY PLASTIC INSULATION

For use at heave location Station 123+00

GENERAL NOTES

1. All joints between existing and proposed hot bituminous pavement shall be butted. Payment shall be made under Item 202.203 Pavement Butt Joint.

2. Construct Butt Joints at all paved drives and entrances.

3. Where deemed necessary by the Resident, winter sand shall be removed from the edges of shoulders and placed in designated areas or disposed of. Payment will be made under the appropriate contract items.

4. All non-guardrail inslopes shall be rototilled, or graded, if necessary, so that the slope does not exceed 3:1 from the edge of the shoulder break. Excess material will be placed in designated areas, or disposed of, as designated by the Resident. Payment will be made under appropriate contract items.

5. All inslope and ditches in cut areas shall be regraded to 3:1, or flatter, as directed by the Resident.

6. The Contractor shall place suitable existing material, or other material acceptable to the Resident, on all pavement edges to allow no greater than a 40 mm [1 ¼ in] drop-off and be graded to 3:1 or flatter. Payment to be incidental to the contract.

7. All wood posts on 350 terminal end installation shall be cut so that no more than 25 mm [1 in] is exposed above the beam.

8. All waste material not used on the project shall be disposed of off the project in waste areas approved by the Resident

9. Any damage to the slopes caused by the Contractor's equipment, personnel, or operation shall be repaired to the satisfaction of the Resident. All work, equipment and materials required to make repairs shall be at the Contractor's expense.

10. A one meter [3 ft] paved lip shall be placed at all gravel entrances, except woods and field entrances, unless otherwise directed by the Resident.

11. Item # 411.10, Untreated Aggregate Surface Course, may also meet the gradation requirements of item # 204.20, Add Shoulder Aggregate.

GENERAL NOTES

12. Any necessary cleaning of existing pavement prior to paving shall be incidental to the related paving items.

13. All existing paved shoulders and widenings to be resurfaced as directed by the Resident.

14. When super elevation exceeds the slope of the low side shoulder, the shoulder will have same slope as traveled way.

15. No existing drainage shall be abandoned, removed or plugged without prior approval of the Resident.

16. The following shall be incidental to the 603 item(s):
    - Any cutting of existing culverts and or connectors necessary to install new culvert replacements or extensions
    - All pipe excavation including any cutting and removal of pavement
    - All ditching at pipe ends
    - Furnishing, placing, grading, and compacting of any new gravel and/or fill material. This includes Granular Borrow used under pipes and for temporary detours to maintain traffic during pipe installation (excavation is also incidental).
    - Granular Borrow under the pipe shall meet the requirements for Underwater Backfill
    - All work necessary to connect to existing pipes
    - Flow lines may be changed by 0.5M [1.5 ft]
    - Any necessary clearing of brush and small trees at culvert ends

17. Existing culverts and catch basins will be cleaned as directed by the Resident under the appropriate Pay Items.

18. As directed by the Resident, all existing Underdrain Outlets shall be located, cleaned out, and ditched as required or replaced as necessary. Payment will be made under appropriate hourly contract items.

19. All connections for Underdrain to roadway culverts will be incidental to U.D. pipe items.

20. Two guardrail delineator posts will be installed at the leading end and one at the trailing end of each run of guardrail. One delineator post will also be installed at each underdrain outlet.

GENERAL NOTES

21. 350 Flared Terminals shall be installed concurrently with the placement of each section of beam guardrail.

22. Holes created by Guardrail removal will be filled and compacted with approved materials as directed by the Resident. Payment to be considered incidental to the guardrail items.

23. Backing up bituminous curb is incidental to the curb items. In areas where new bituminous curb is designated to replace existing, the removal of the old bituminous curb shall be incidental to the new curb.

24. Trim all tree branches to 6 m [20 ft] above pavement. Payment shall be made under the appropriate labor and equipment rental items.

25. "Undetermined Locations" shall be determined by the Resident.

26. Stations referenced are approximate.

27. All work shall be done in accordance with the Maine Department of Transportation's Best Management Practices for Erosion Control & Sediment Control, September, 2002.

28. MDOT will final stripe the project. The Contractor is responsible for transferring the existing striping pattern to the surface course.

29. Plan and profile sheets for the previously constructed projects covering this project are available upon request. These projects are:

STATE OF MAINE
DEPARTMENT OF TRANSPORTATION

FORT KENT

AROOSTOOK

U.S. ROUTE 1

STP-1132(400)X

PROJECT LENGTH : .77 MILES

PPM

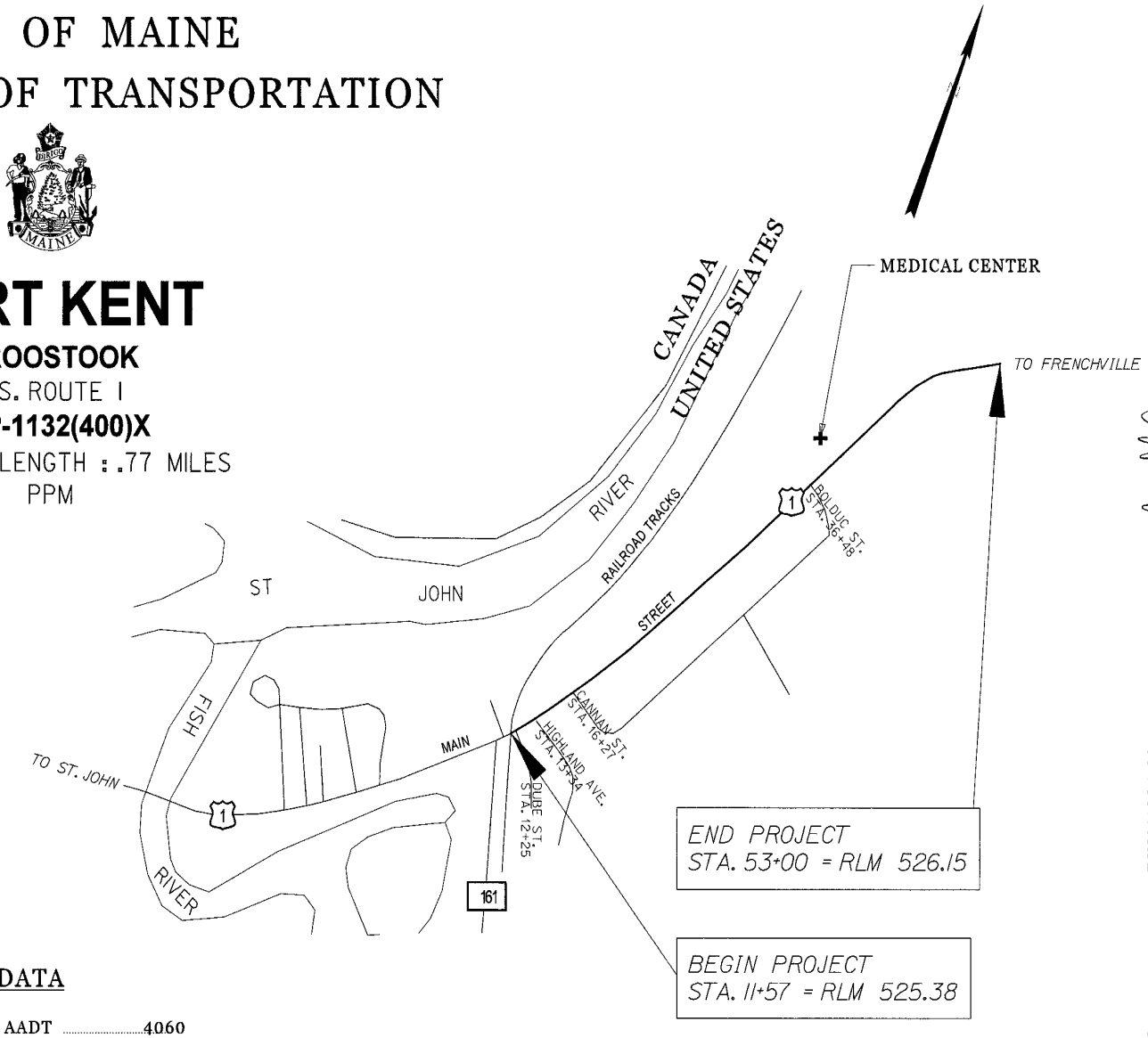

STP-1132(400)X

PROJECT LOCATION

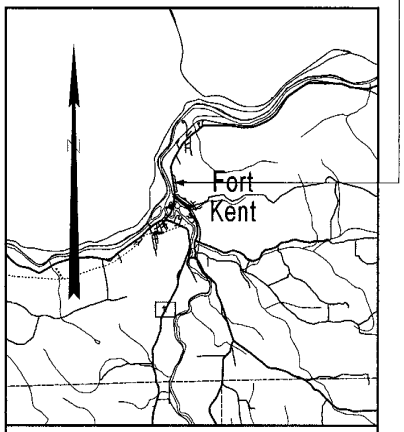

LOCATION MAP

2 0 2 4

Graphic Scale in Miles

3/4" HOT MIX ASPHALT OVERLAY

TRAFFIC DATA

Current (2004) AADT	4060
Future (2016) AADT	4550
Future (2024) AADT	4870
DHV - % of AADT	10
Design Hour Volume	487
% Heavy Trucks (AADT)	6
% Heavy Trucks (DHV)	6
Directional Distribution (DHV)	61
18 kip Equivalent P 2.0	248
18 kip Equivalent P 2.5	236
Design Speed (km/h)	30

STATE OF MAINE
DEPARTMENT OF TRANSPORTATION

APPROVED

	DATE
COMMISSIONER:	4/6/04
CHIEF ENGINEER:	04/06/04

STATE OF MAINE — Brent Steven Bubar 6640 Registered Professional Engineer — VERIFIED

PROJECT INFORMATION	
PROGRAM	REGIONAL
PROJECT MANAGER	D. SPONENBERG
DESIGNER	J. BITNER
CONSULTANT	
PROJECT RESIDENT	
CONTRACTOR	
PROJECT COMPLETION DATE	

SIGNATURE
6640
P.E. NUMBER
4/5/04
DATE

PIN011324.00

STP-1132(400)X

FORT KENT
U.S. ROUTE 1

TITLE SHEET

SHEET NUMBER

1

Filename: ...\11324.00 FortKent Title Sheet.dgn Division: HIGHWAY Username: Roger.Barnes Date:4/2/2004

Fort Kent
STP-1132(400)X
Route 1
PPM

General Outline of Work

1. Pave mainline travel way from Sta. 11+57 to Sta. 53+00 with variable depth shim, Item 403.211 as directed by the Resident Inspector.

2. Pave from Sta. 11+57 to Sta. 53+00 with ¾" of 9.5mm HMA Item 403.210 as directed by the Resident Inspector.

HOT MIX ASPHALT SHIM AND OVERLAY SECTION STA. 11+57 TO 53+00

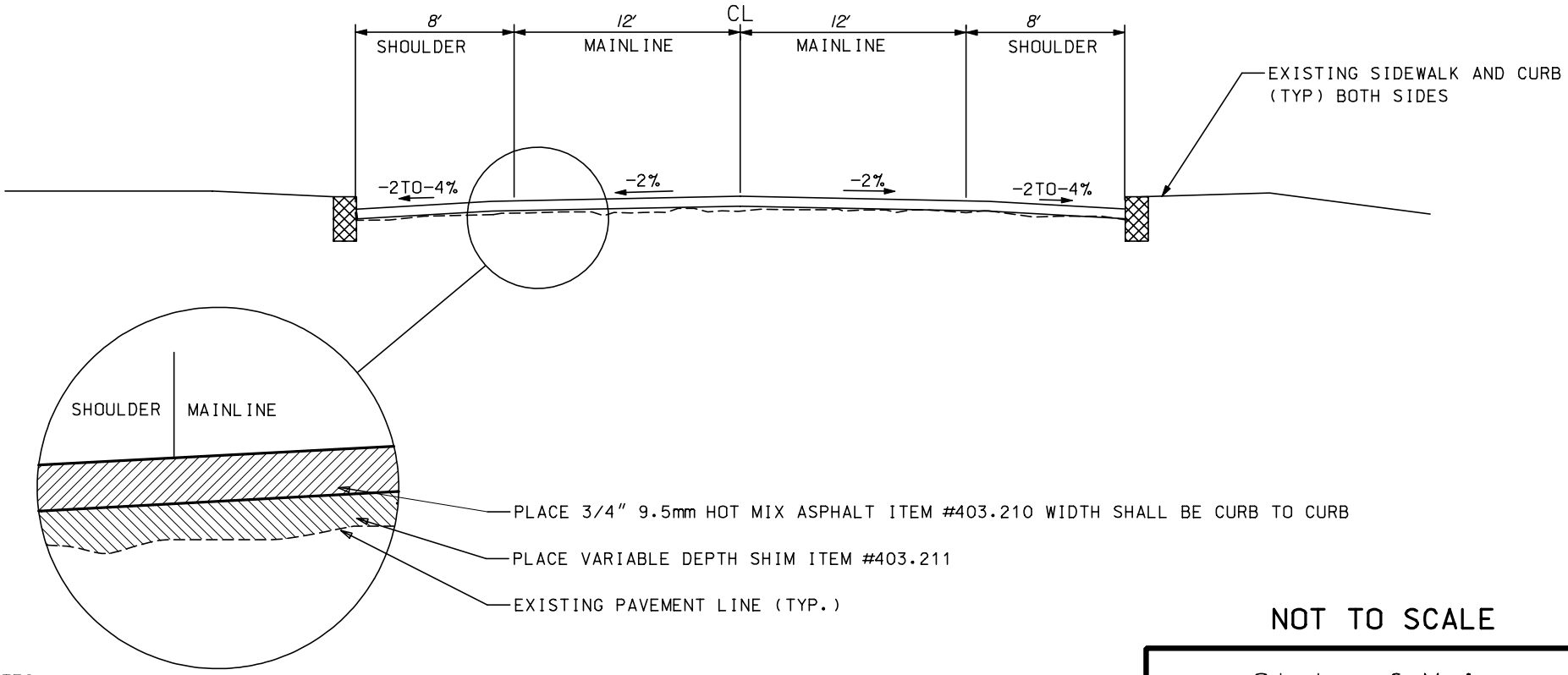

NOT TO SCALE

NOTES:

1) DAMAGE TO EXISTING SIDEWALK AND CURB SHALL BE REPAIRED AT CONTRACTORS EXPENSE

2) SHIM SHALL BE TAPPERED OFF TO 0 THICKNESS, 2' MAX. BEYOND EDGE OF MAINLINE

State of Maine
Dept. of Transportation

FORT KENT
Route 1
PROJECT #STP-1132(400)X

sheet 1 of 1 03/31/04

STP-1132(400)X
Fort Kent
Rte. 1
PPM

Pole #	Topo - Left	Station Feet	Topo - Right	Pole #
	Begin	11+57	Project/ Rail Road Boxes	
	Rail Road Crossing Signal	11+74		
		11+76	Rte. 1 Sign	
		11+90	Fire Hydrant	
	Catch Basin	12+17		
		12+25	Dube St. Water Gate	
	Sewer Manhole	12+31		
24-Jan	Pole	12+34		
	Allagash Caribou Sign	12+44		
		12+47	Stop Sign	
		12+61	Catch Basin	
		12+99	25 MPH Sign	
	Rte. 11	13+10		
	Sewer Manhole	13+23		
		13+34	Highland Ave.	
		13+37	Water Gate	
		13+42	Water Gate	
123	Pole	13+45		
		13+46	Water Gate	
		13+59	Stop Sign	
		13+74	Catch Basin	
		13+86	Paved Drive	
		13+98	Block Retaining Wall	
	Grass Ent.	14+06		
26	Pole	14+37		
		14+53	Paved Drive	
		14+65	Begin Concrete Retaining wall	
	Paved Drive	14+69		
		15+21	End Covcrete Retaining Wall	
	Paved Drive	15+36	Paved Drive	
	Catch Basin	15+90		
27/28	Pole	15+92	Madawaska 19 Miles Sign	
	Begin Paved Drive	15+93		
		16+20	Water Gate	
	Sewer Manhole	16+27	Cannan St.	
		16+51	Stop Sign	
	End Paved Drive	16+60	Catch Basin	
		16+71	Fire Hydrant/ Water Gate	
		16+79	Water Gate	
	Begin Paved Drive	16+87		
		16+90	Water Gate	
		17+14	Gravel Drive	
	End Paved Drive	17+25		
29	Pole	17+40		
	Stop Signal Sign	17+47		
	Paved Drive	17+77		
		17+97	Paved Drive	
	Catch Basin	18+26		
	Gravel Drive	18+44		
		18+54	Catch Basin	
	Gravel Drive	18+80		
		19+07	Paved Drive	
	Gravel Drive	19+23	Begin Concrete Retaining wall	
		19+70	End Covcrete Retaining Wall	
		19+71	Paved Drive	
31	Pole	19+73		
		19+83	Begin Concrete Retaining wall	
	Paved Drive	20+04		
		20+27	Concrete Steps	
	Paved Drive	20+47		
	Paved Drive	20+89		
		20+96	End Covcrete Retaining Wall	
		21+10	Paved Drive	
	Paved Drive	21+27		
		21+33	Catch Basin	
32	Pole	21+36		
		21+76	Fire Hydrant & Water Gate	
		22+00	Paved Drive	
	Paved Drive	22+05		
		22+56	Water Gate	
		22+67	Pole	33
		22+96	Paved Drive	
	Begin Paved Drive	23+15		
	End Paved Drive	23+66	Paved Drive	
		24+01	Pole	34
		24+33	Paved Drive	

STP-1132(400)X
Fort Kent
Rte. 1
PPM

Pole #	Topo - Left	Station Feet	Topo - Right	Pole #
		24+48	No U Turns	
	Paved Drive	24+60		
		25+39	Pole	35
	Paved Drive	25+64	Exit Only Sign	
		25+78	Paved Drive	
	Catch Basin	26+01	Catch Basin	
	Sewer Manhole	26+08		
	Catch Basin	26+29	Catch Basin	
	Begin Guard Rail	26+44		
		26+47	Sewer Manhole/ Paved Drive	
		26+72	Catch Basin	
		27+76	Paved Drive	
		28+11	Pole	37
		28+31	Sewer Manhole	
		28+55	Paved Drive	
		28+75	Catch Basin	
	Mailbox	28+78		
		29+04	Paved Drive	
		29+58	Pole	38
	End Guard Rail	30+14		
	Paved Drive	30+24		
		30+27	Catch Basin	
		30+79	Paved Drive	
	Fire Hydrant	30+93		
		31+09	Pole	39
		32+01	Catch Basin	
		32+23	Sewer Manhole	
		32+63	Pole	40
	Paved Drive	33+02		
		33+18	Paved Drive	
	Paved Drive	33+43	Catch Basin	
	Paved Drive	33+84		
		33+90	Pole	41
	Pole	33+93		
		34+36	Paved Drive	
	Mailbox	33+54		
		33+56	Catch Basin	
	Paved Drive	34+71		
42	Pole	34+95		
		35+09	Pole	42
	Paved Drive	35+55	Paved Drive	
	Exit Sign	36+09		
		36+19	Pole	43
	Paved Drive	36+23		
		36+24	Sewer Manhole	
	Patient Parking sign	36+41		
		36+48	Bolduc St.	
	Paved Drive	36+76		
		36+82	Pole	44
		36+84	Catch Basin	
		36+92	Fire Hydrant	
	Northen Maine Sign	37+10		
	Paved Drive	37+34	Paved Drive	
	Water Gate	37+45	Begin Concrete Retaining wall	
	Water Gate	37+48		
		37+49	Water Gate	
		37+52	Water Gate	
		37+75	Sewer Manhole	
		37+95	End Concrete Retaining Wall	
	Flag Pole	38+02		
		38+15	Pole	45
	Mailbox	38+31		
	Paved Drive	38+57	Paved Drive	
	Water Gate	38+73		
	No Parking Sign	38+78		
		39+15	Paved Drive	
	Mailbox	39+18		
	Water Gate	39+31		
		39+32	Pole	46
	No Parking Sign	39+40		
	Enter	39+97		
	Paved Drive	40+14		
		40+21	Sewer Manhole	
		40+29	Paved Drive	
	Mailbox	40+38		
	No Parking Sign	40+42		

STP-1132(400)X
Fort Kent
Rte. 1
PPM

Pole #	Topo - Left	Station Feet	Topo - Right	Pole #
		40+44	Catch Basin	
		40+61	Pole	D7
	Paved Drive	40+70		
	Sewer Manhole	40+75		
		40+87	Sewer Manhole	
	Mailbox	41+04		
		41+21	Paved Drive	
	Paved Drive	41+27		
		41+66	Curve Sign	
	Mailbox	41+76	Pole	48
	Paved Drive	42+03		
	Catch Basin	42+60	Catch Basin	
49-1	Pole	42+61		
	Stop Sign	42+74		
		42+82	Paved Drive	
	NMMC Drive	43+00		
	NMMC Sign	43+23		
		43+28	Pole	49
49	Pole	43+34		
		43+71	Paved Drive	
	Paved Drive	43+94		
		44+16	Sewer Manhole	
		44+24	Paved Drive	
	Paved Drive	44+30		
		44+35	Block Retaining Wall	
		44+71	Sewer Manhole	
50S	Pole	44+80	Pole	50
	Paved Drive	44+99		
		45+20	Catch Basin	
	Fire Hydrant	45+27		
	Gravel Drive	45+63		
		45+67	Pole	51
		45+74	Catch Basin in lawn	
		45+90	Gravel Drive	
	Catch Basin	45+91		
	25 MPH	46+37		
		46+57	Catch Basin	
		45+58	Mailboxs	
	Mailbox	46+65		
		46+73	Paved Drive	
	Paved Drive	46+79		
		46+99	40 MPH	
	Pole	47+03		
		47+08	Pole	52
	Stop Sign	47+50		
		47+52	Sewer Manhole	
	Mountain View Rd.	47+61		
P1	Pole	47+90		
	East Main St.	48+00	Frenchville Rd.	
	Paved Drive	48+23		
53S	Pole	48+49	Pole	53
	Paved Drive	49+51		
	Mailbox	49+70		
	Fire Hydrant	49+81	Pole	54
	Compact Sign	49+87		
		51+00	Paved Drive	
	Mailbox	51+12		
		51+18	Mailboxes	
	Paved Drive	51+35		
		51+81	Catch Basin	
55S	Pole	51+83		
	End	53+00	Project	

CONSTRUCTION NOTES

202.203 PAVEMENT BUTT JOINTS

For side streets, sidewalks, drives, around catch basins,
and the beginning and the end of the project.

203.20 COMMON EXCAVATION

Excavate and investigate frost heave at Sta. 50+83. Salvage pavement and aggregate subbase course gravel (if suitable as determined by the Resident).

Side	Station	Station
LT ML	50+70.0	50+95.0
RT ML	50+70.0	50+95.0

304.103 AGGR SUBB COURSE - GRAVEL

For use at frost heave Sta. 50+83.

403.209 HOT MIX ASPHALT 9.5 MM (INCIDENTALS)

Use for paved drives and paved driveway aprons as directed by the Resident Inspector

Paved Drives =	64
Aprons =	6

403.21 HOT MIX ASPHALT 9.5 MM

3/4" surface course

403.211 HOT MIX ASPHALT 9.5 MM (SHIM)

Variable depth shim, 14' in width or as directed by the Resident

604.18 ADJUST MANHOLE OR CB TO GRADE

Side	Station	Quantity
Left	12+31.0	1
Left	13+23.0	1
Right	40+44.0	1

CONSTRUCTION NOTES

605.09 6" UNDERDRAIN TYPE B

For use as a lateral drain at heave location Sta. 50+83

620.54 STABILIZATION GEOTEXTILE

For use at heave location Sta. 50+83 as determined by the Resident

609.31 CURB TYPE 3

For use at various locations as directed by Resident

GENERAL NOTES

1. All joints between existing and proposed hot bituminous pavement shall be butted. Payment shall be made under Item 202.203 Pavement Butt Joint.

2. Construct Butt Joints at all paved drives and entrances.

3. Grind transition tapers at Catch Basins under Item No. 202.203, Pavement Butt Joints, as directed by the Resident.

4. Any damage to the slopes caused by the Contractor's equipment, personnel, or operation shall be repaired to the satisfaction of the Resident. All work, equipment and materials required to make repairs shall be at the Contractor's expense.

5. A one meter (3 ft) paved lip shall be placed at all gravel entrances, except woods and field entrances, unless otherwise directed by the Resident.

6. Any necessary cleaning of existing pavement prior to paving shall be incidental to the related paving items.

7. All existing paved shoulders and widenings to be resurfaced as directed by the Resident.

8. Shoulder shim shall taper to 0 mm at face of existing curb and guardrail or as directed by Construction Resident

10. No existing drainage shall be abandoned, removed or plugged without prior approval of the Resident.

11. All Utility Facilities shall be adjusted by perspective Utility unless noted.

12. In areas where new curb is designated to replace existing, the removal of the old bituminous curb shall be incidental to the new curb. Backing up new bituminous curb, and any Loam, hand place Seeding and Mulch is incidental to the new curb items. Hydroseeding behind new curb will not be required due to minimal quantities.

13. No separate payment for Superintendent or Foreman will be made for the supervision of equipment being paid under appropriate rental items.

14. "Undetermined Locations", as stated in the Construction Notes, shall be determined by the Resident.

15. Stations referenced in the Construction Notes are approximate.

GENERAL NOTES

16. MDOT will final stripe the project.

17. Plan and profile sheets for the previously constructed projects covering this project are available upon request. These projects are: Fort Kent FAP-050-P(14) D.O.T. No. 2-406

STATE OF MAINE
DEPARTMENT OF TRANSPORTATION

FORT KENT

AROOSTOOK

U.S. ROUTE 1

STP-1132(500)X

PROJECT LENGTH : .61 MILES

LEVEL II

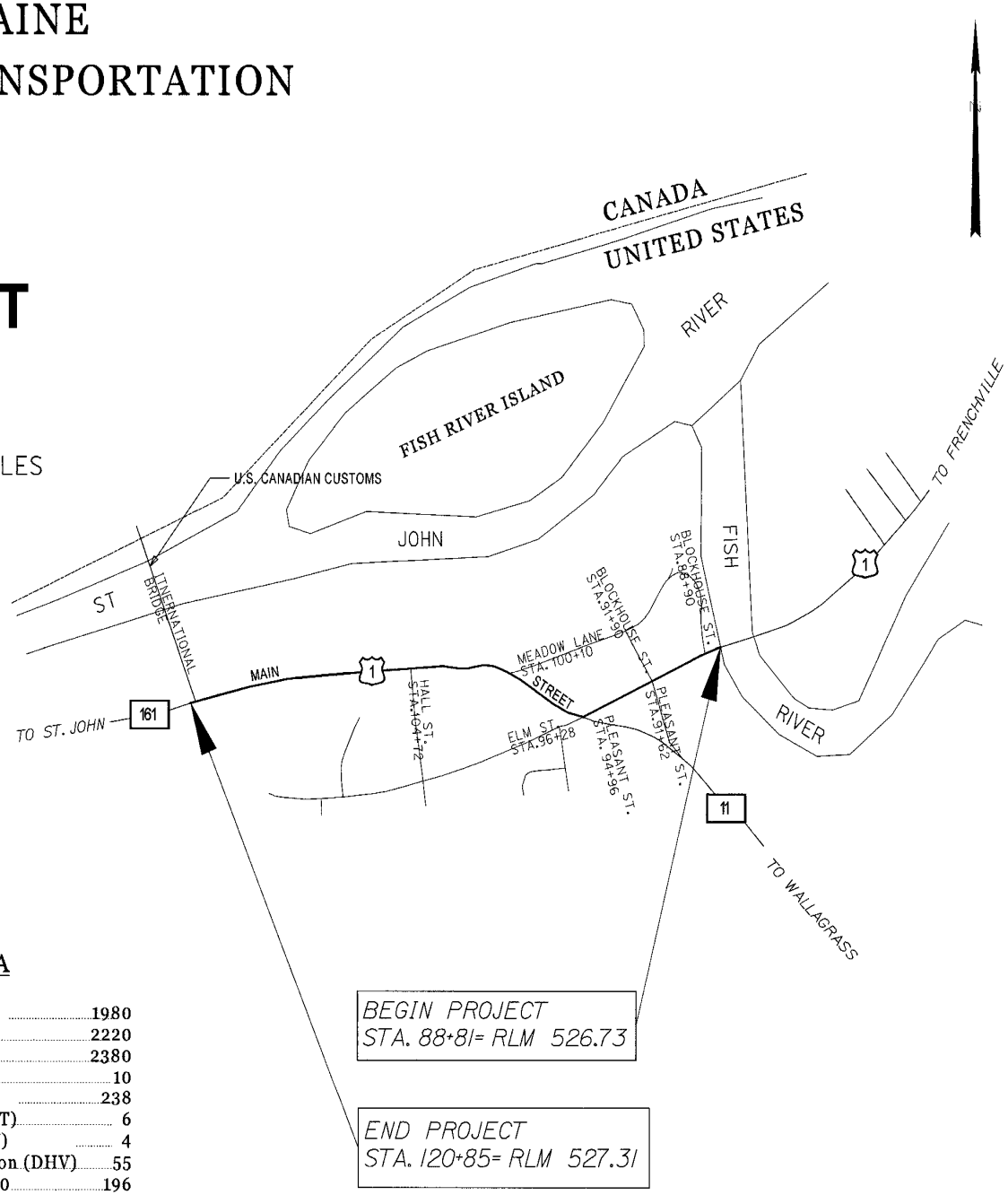

STP-1132(500)X

PROJECT LOCATION

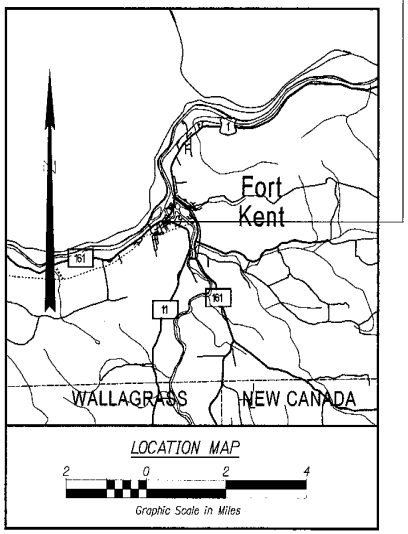

1 1/2" PAVEMENT REMOVAL AND RESURFACING

TRAFFIC DATA

Current (2004) AADT	1980
Future (2016) AADT	2220
Future (2024) AADT	2380
DHV - % of AADT	10
Design Hour Volume	238
% Heavy Trucks (AADT)	6
% Heavy Trucks (DHV)	4
Directional Distribution (DHV)	55
18 kip Equivalent P 2.0	196
18 kip Equivalent P 2.5	187
Design Speed (km/h)	25

STATE OF MAINE
DEPARTMENT OF TRANSPORTATION

APPROVED — DATE

COMMISSIONER:

CHIEF ENGINEER: 04/05/04

STATE OF MAINE — Brent Steven Bubar 6640 — PROFESSIONAL ENGINEER

SIGNATURE 6640

P.E. NUMBER

DATE 4/5/04

PROJECT INFORMATION	
PROGRAM	REGIONAL
PROJECT MANAGER	D. SPOMBERG
DESIGNER	J. BITHER
CONSULTANT	
PROJECT RESIDENT	
CONTRACTOR	
PROJECT COMPLETION DATE	

PIN 011325.00

STP-1132(500)X

FORT KENT
U.S. ROUTE 1

TITLE SHEET

SHEET NUMBER

1

Filename: ...\11325.00 FortKent Title Sheet.dgn Division: HIGHWAY Username: Roger.Barnes Date:4/2/2004

FortKent1.dgn

HOT MIX ASPHALT AND MILLED SECTION STA. 88+81 TO 93+35

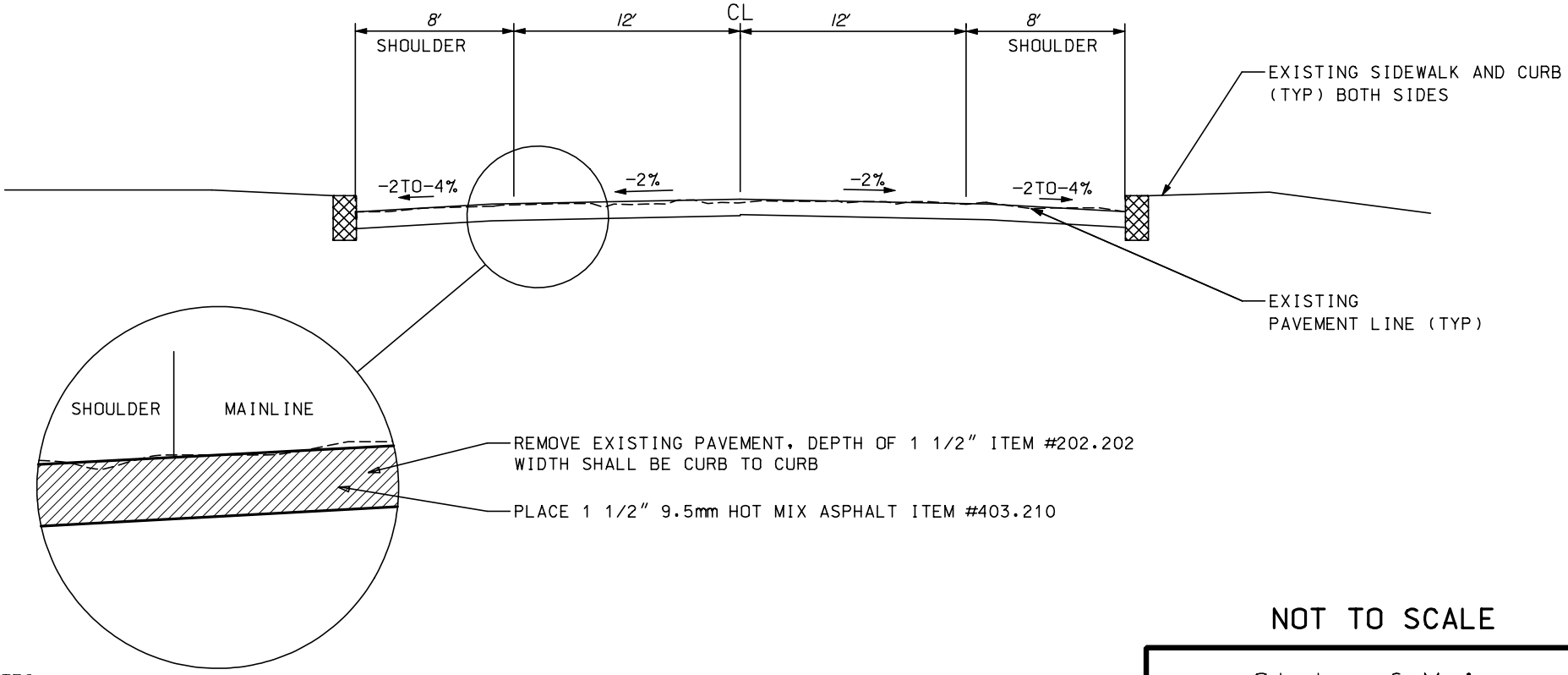

NOT TO SCALE

NOTES:

1) CONTRACTOR SHALL REESTABLISH EXISTING STORM FLOW PATTERN TO DRAINAGE STRUCTURES

2) DAMAGE TO EXISTING SIDEWALK AND CURB SHALL BE REPAIRED AT CONTRACTORS EXPENSE

3) CURB SHALL HAVE MIN. 7" REVEAL

State of Maine
Dept. of Transportation

FORT KENT
Route 1
PROJECT #STP-1132(500)X

sheet 1 of 2

03/31/04

HOT MIX ASPHALT AND MILLED SECTION STA. 93+35 TO 120+85

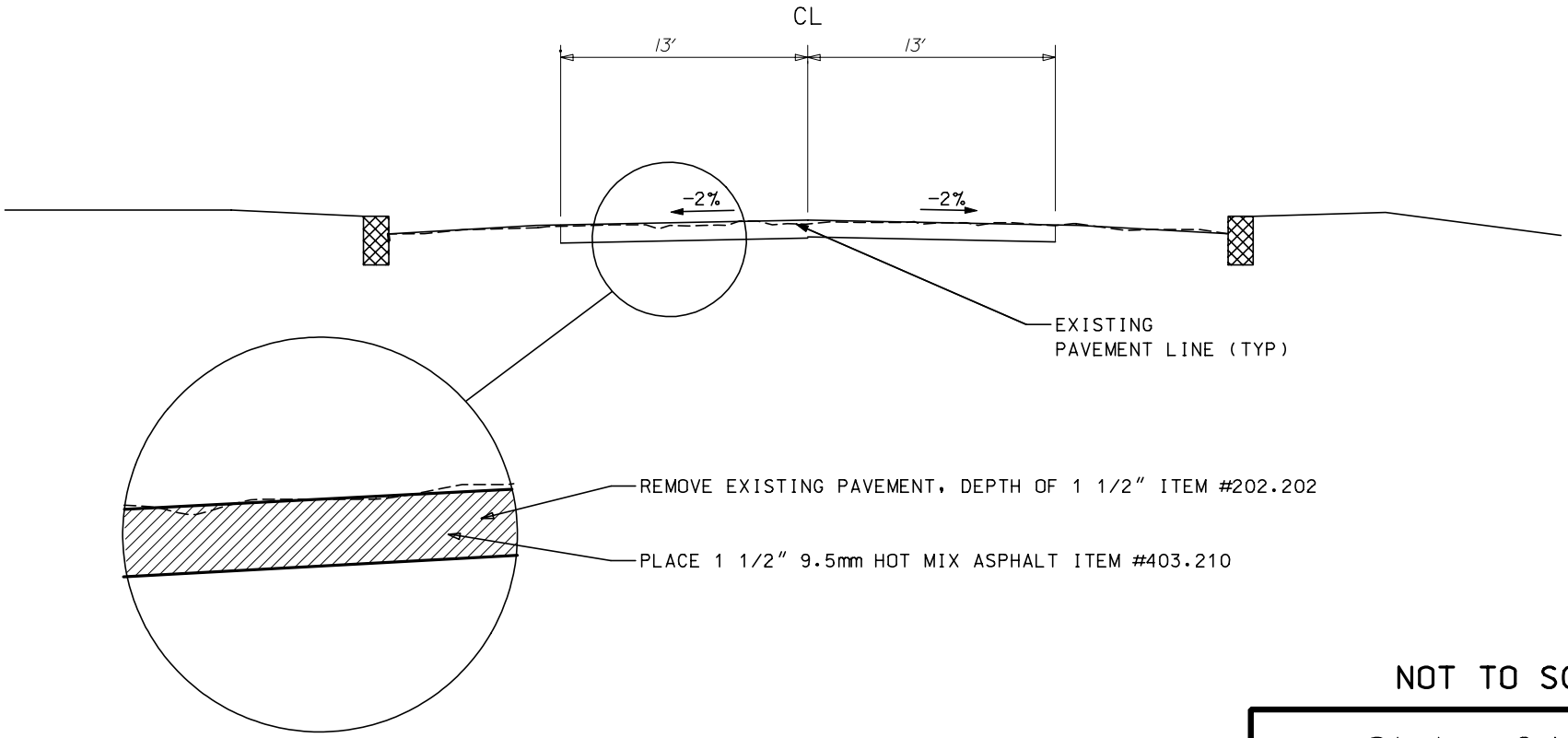

NOT TO SCALE

NOTES:

1) DAMAGE TO EXISTING SIDEWALK AND CURB SHALL BE REPAIRED AT CONTRACTORS EXPENSE

State of Maine
Dept. of Transportation

FORT KENT
Route 1
PROJECT #STP-1132(500)X

sheet 2 of 2

03/31/04

Fort Kent
STP-1132(500)X
Route 1
Level II

General Outline of Work

1. Mill 40' wide by 1 ½" deep from Station 88+81 to Station 93+35.
   Mill the travel way 26' wide by 1 ½" deep from Station 93+35 to Station 120+85.

2. Reset curb from Station 93+12 LT to 93+52 LT and construct sidewalk at the same location.

3. Pave the milled areas from Station 88+81 to Station 120+85 with 1 ½" of 9.5mm HMA , Item # 403.210

STP-1132(500)X
Fort Kent
Rte. 1
Level II

Pole #	Topo - Left	Station (Feet)	Topo - Right	Pole #
	Bridge	88+80	Bridge	
	M.L Water Gate	89+13		
	M.L Water Gate	90+90		
	Water Gate Side Road	91+08		
		91+90	Sewer M.H. Water Gate	
	Elm St. Water gate	96+30		
	Elm St. Water gate	96+56		
	Water Gate	100+07		
	Sewer M.H. Hall St.	104+68		
	Water Gate Hall St.	104+80		
	Water Gate Shoulder	104+97		
	Water Gate Shoulder	109+05		
	Water Gate Shoulder	109+50		
	Water Gate Shoulder	109+57		
		112+60	Sewer M.H.	
	M.L.	113+67		
	2 shutoffs	114+17		
	Shutoff	114+21		
		115+05	Sewer M.H.	
	Shutoff	115+13		
		115+19	Sewer M.H. Border Rd.	
		115+82	T.W.	
		116+08	Sewer M.H.	
		116+41	Shutoff T.W.	
		116+97	Shutoff T.W.	
		117+74	Sewer M.H.	
		119+48	Water Gate	

STP-1132(500)X
Fort Kent
Rte. 1
Level II

CONSTRUCTION NOTES

202.202 REMOVING PAVEMENT SURFACE

Station	Station	Length (feet)	Width (feet)	Discription
88+81.0	93+35.0	454.0	40.0	Full width, curb to curb
93+35.0	120+85.0	2750.0	26.0	13' from centerline in each travel lane
(95'+30')/2		62.5	40.0	Pleasant St.
		126.0	13.0	Border Crossing Intersection

202.203 PAVEMENT BUTT JOINTS

Use at paved drives in the full width area
Paved Drives = 6

403.209 HOT MIX ASPHALT 9.5 MM (INCIDENTALS)

Use for paved drives and sidewalk as directed by the Resident Inspector
Paved Drives = 6

403.21 HOT MIX ASPHALT 9.5 MM

1 1/2 inch lift

608.45 CONSTRUCTING SIDEWALK

Side	Station	Station	Length (feet)	Width (feet)
Left	93+12.0	93+52.0	40	5

609.38 RESET CURB TYPE 1

Side	Station	Station	Length (feet)
Left	93+12.0	93+52.0	40

643.86 TRAFFIC SIGNAL LOOP DETECTORS

Side	Station	Quantity
Rt	89+85	1
Lt	93+85	1

GENERAL NOTES

1. All joints between existing and proposed hot bituminous pavement shall be butted. Payment shall be made under Item 202.203 Pavement Butt Joint.

2. Construct Butt Joints at all paved drives and entrances.

3. Any damage to the slopes or any other area along project caused by the Contractor's equipment, personnel, or operation shall be repaired to the satisfaction of the Resident. All work, equipment and materials required to make repairs shall be at the Contractor's expense.

4. Any necessary cleaning of existing pavement prior to paving shall be incidental to the related paving items.

5. All existing paved shoulders and widenings to be resurfaced as directed by the Resident.

6. Mill Travelway Sta. 88+81 to Sta. 93+35 by 40 ft. in width (curb to curb) and 1 ½ ins. in Depth.
   Mill Travelway Sta. 93+35 to Sta. 120+85 by 26 ft. in width and 1 ½ ins. in Depth.
   Mill various Shoulder areas at Street Intersections as directed by Construction Resident.
   Mill areas to be filled using 1 ½ ins. of 9.5mm HMA Item 403.210

7. When milling the lane adjacent to the newly placed pavement, the rotomill shall mill into the newly placed pavement by 1 in.+- or as directed by Construction Resident.

8. Pavement millings will become the property of the Department of Transportation and will be hauled to the State Maintenance Garage in Fort Kent. The material shall be hauled and stockpiled in one area, pushed up by a Loader or similar vehicle. Hauling and Stockpiling of millings shall be incidental to Pavement Removal Item No. 202.202

9. Shoulder shim shall taper to 0 mm at face of existing curb and guardrail or as directed by Construction Resident.

10. No existing drainage shall be abandoned, removed or plugged without prior approval of the Resident.

11. All Utility Facilities shall be adjusted by perspective Utility unless noted.

12. In areas where new curb is designated to replace existing, the removal of the old bituminous curb shall be incidental to the new curb. Backing up new bituminous curb, and any Loam, hand place Seeding and Mulch is incidental to the new curb items. Hydroseeding behind new curb will not be required due to minimal quantities.

GENERAL NOTES

13. No separate payment for Superintendent or Foreman will be made for the supervision of equipment being paid under appropriate rental items.

14. "Undetermined Locations", as stated in the Construction Notes, shall be determined by the Resident.

15. Stations referenced in the Construction Notes are approximate.

16. MDOT will final stripe the project.

17. Plan and profile sheets for the previously constructed projects covering this project are available upon request. These projects are: Fort Kent FAP-050-P(14) D.O.T. No. 2-406

General Decision Number ME030009 06/13/2003 ME9

Superseded General Decision No. ME020009

State: Maine

Construction Type:
HIGHWAY

County(ies):

AROOSTOOK	KNOX	SAGADAHOC
FRANKLIN	LINCOLN	SOMERSET
HANCOCK	OXFORD	WALDO
KENNEBEC	PISCATAQUIS	YORK

HIGHWAY CONSTRUCTION PROJECTS excluding major bridging (for example: bascule, suspension and spandrel arch bridges; those bridging waters presently navigating or to be navigatable; and those involving marine construction in any degree); tunnels, building structures in rest area projects and railroad construction.

Modification Number	Publication Date
0	06/13/2003

COUNTY(ies):

AROOSTOOK	KNOX	SAGADAHOC
FRANKLIN	LINCOLN	SOMERSET
HANCOCK	OXFORD	WALDO
KENNEBEC	PISCATAQUIS	YORK

ENGI0004V 04/01/2003

	Rates	Fringes
POWER EQUIPMENT OPERATORS:		
Pavers	16.51	6.00
Rollers	16.51	6.00

SUME4024A 10/24/2000

	Rates	Fringes
CARPENTERS	11.60	1.51
IRONWORKERS		
Structural	12.03	1.58
LABORERS		
Drillers	10.00	2.50
Flaggers	6.00	
Guardrail Installers	7.92	
Landscape	7.87	.16
Line Stripper	8.69	.23
Pipelayers	9.21	2.31
Rakers	9.00	1.51
Sign Erectors	10.00	
Unskilled	8.66	1.38
Wheelman	8.50	.43
POWER EQUIPMENT OPERATORS		
Backhoes	11.87	2.05
Bulldozers	12.33	2.88
Cranes	14.06	1.75
Excavators	12.38	2.48
Graders	13.06	3.73

Loaders	11.41	2.87
Mechanics	13.18	2.57
TRUCK DRIVERS		
Dump	9.35	3.10
Tri axle	8.70	1.18
Two axle	8.56	2.19

WELDERS - Receive rate prescribed for craft performing operation to which welding is incidental.

==========

Unlisted classifications needed for work not included within the scope of the classifications listed may be added after award only as provided in the labor standards contract clauses (29 CFR 5.5(a)(1)(ii)).

In the listing above, the "SU" designation means that rates listed under that identifier do not reflect collectively bargained wage and fringe benefit rates. Other designations indicate unions whose rates have been determined to be prevailing.

WAGE DETERMINATION APPEALS PROCESS

1.) Has there been an initial decision in the matter? This can be:

* an existing published wage determination
* a survey underlying a wage determination
* a Wage and Hour Division letter setting forth a position on a wage determination matter
* a conformance (additional classification and rate) ruling

On survey related matters, initial contact, including requests for summaries of surveys, should be with the Wage and Hour Regional Office for the area in which the survey was conducted because those Regional Offices have responsibility for the Davis-Bacon survey program. If the response from this initial contact is not satisfactory, then the process described in 2.) and 3.) should be followed.

With regard to any other matter not yet ripe for the formal process described here, initial contact should be with the Branch of Construction Wage Determinations. Write to:

Branch of Construction Wage Determinations
Wage and Hour Division
U. S. Department of Labor
200 Constitution Avenue, N. W.
Washington, D. C. 20210

2.) If the answer to the question in 1.) is yes, then an interested party (those affected by the action) can request review and reconsideration from the Wage and Hour Administrator (See 29 CFR Part 1.8 and 29 CFR Part 7). Write to:

Wage and Hour Administrator
U.S. Department of Labor
200 Constitution Avenue, N. W.
Washington, D. C. 20210

The request should be accompanied by a full statement of the

interested party's position and by any information (wage payment data, project description, area practice material, etc.) that the requestor considers relevant to the issue.

3.) If the decision of the Administrator is not favorable, an interested party may appeal directly to the Administrative Review Board (formerly the Wage Appeals Board). Write to:

Administrative Review Board
U. S. Department of Labor
200 Constitution Avenue, N. W.
Washington, D. C. 20210

4.) All decisions by the Administrative Review Board are final.

END OF GENERAL DECISION

Project Nos. STP-1125(600)X,
STP-1125(700)X, STP-1125(800)X
STP-1125(900)X & STP-1217(300)X

SPECIAL PROVISION
CONSTRUCTION AREA

A Construction Area located in the **Town of Saint Francis and Saint John Plantation** has been established by the Maine Department of Transportation in accordance with provisions of Title 29, Section 1703, Maine Revised Statutes Annotated.

The sections of highway under construction are in Aroostook County. On Route 161 in Saint Francis: project STP-1125(600)X begins 0.14 of a mile easterly of the Saint John Plt town line and extends westerly 0.77 of a mile; STP-1125(700)X begins at Cottage Rd and extends westerly 1.2 miles; STP-1125(800)X begins in St John Plt, 1.54 miles westerly of the Dump Rd and extends westerly 0.32 of a mile, ending in Saint Francis. STP-1125(900)X is in Saint John Plt beginning 0.46 of a mile easterly of the Dump Rd and extending westerly 2.0 miles. STP-1217(300)X is Guardrail Improvements in Saint Francis and Saint John Plt.

The State Department of Transportation or the State's Engineer may issue permits for stated periods of time for moving construction equipment without loads, low-bed trailers with overloads, over-height, over-width or over-length equipment or materials over all State maintained sections described in the "Construction Area" above and in addition may issue permits for stated periods of time for moving overweight vehicles and loads over the section described in (a) above. The right to revoke such a permit at any time is reserved by the State Department of Transportation and the issuance of such permits shall be subject to any Special Provisions or Supplemental Specifications written for this project.

A Temporary Permit for each move may be issued by the State Department of Transportation or the State's Engineer for moving Contractor's construction equipment used on the project which exceeds the legal limits (shovels, bulldozers, etc.) to sources of construction material over highways maintained by the State reasonably within the area of the project.

The Municipal Officers for the **Town of Saint Francis and Saint John Plantation** agreed that a permit will be issued to the Contractor for the purpose of hauling loads in excess of the limits as specified in Title 29, Maine Revised Statues Annotated, on the town ways as described in the "Construction Area" and that single move permits will be issued for moving Contractor's construction equipment used on the project which exceeds the legal limits (shovels, bulldozers, etc.) to sources of construction material over town ways reasonably within the area of the project.

In the event it is necessary to transport gravel, borrow, or other construction material in legally registered vehicles carrying legal loads over town ways, a Contractor's Bond of not more than Nine Thousand ($9,000.00) per kilometer of traveled length may be required by the town, the exact amount of said bond to be determined prior to use of any town way.

The maximum speed limits for trucks on any town way will be forty (40) km per hour [25 mph], unless a higher legal limit is specifically agreed upon in writing by the Municipal Officers concerned.

STP-1125(600)X
STP-1125(700)X
STP-1125(800)X
STP-1125(900)X
STP-1217(300)X

PROJECT LOCATION

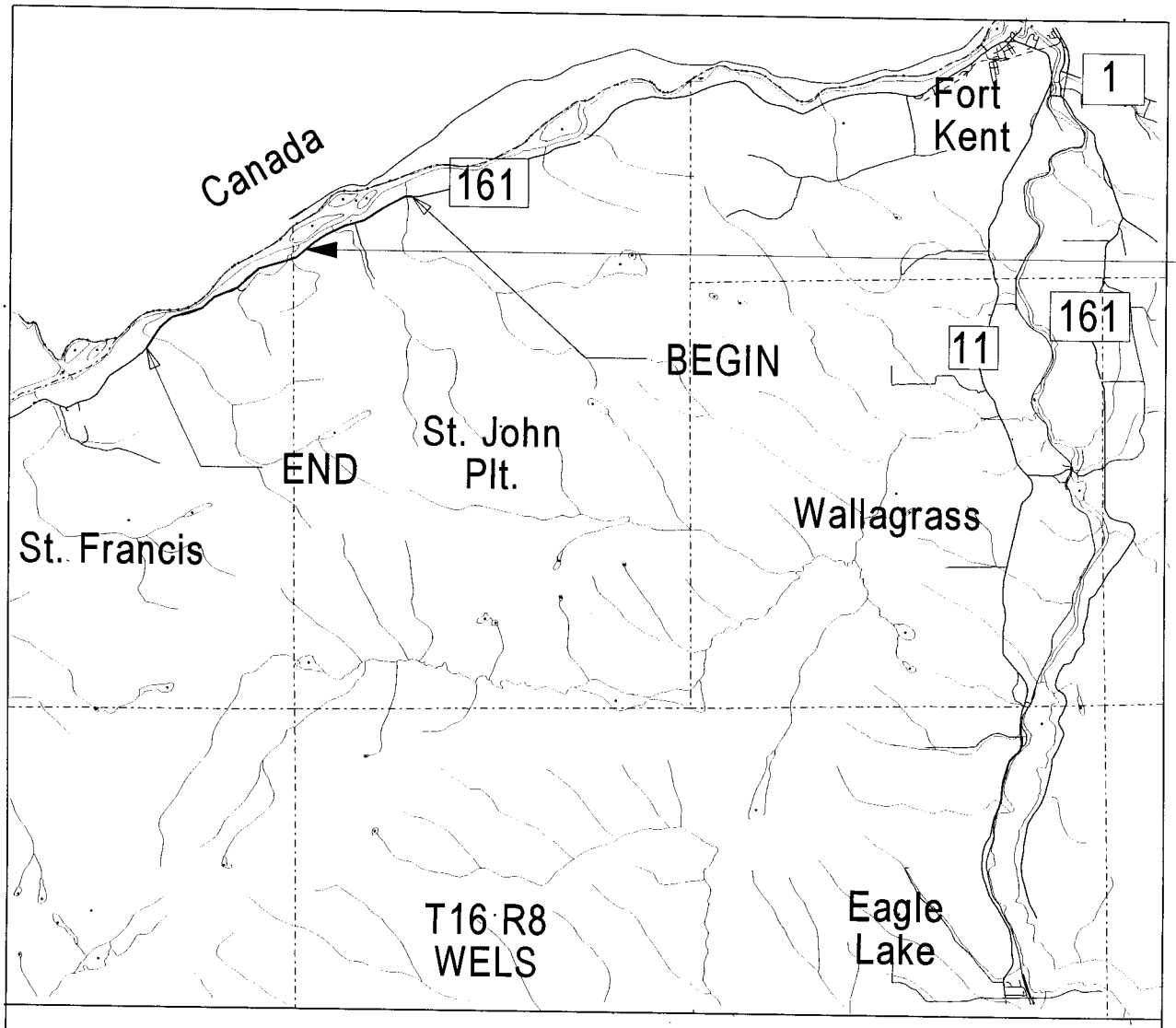

LOCATION MAP

2 0 2 4

Graphic Scale in Miles

Project No. STP-1132(400)X

SPECIAL PROVISION
CONSTRUCTION AREA

A Construction Area located in the **Town of Fort Kent** has been established by the Maine Department of Transportation in accordance with provisions of Title 29, Section 1703, Maine Revised Statutes Annotated.

The section of highway under construction in Aroostook County, project STP-1132(400)X is located on Route 1, beginning 0.09 of a mile northerly of Des Jardin Street and extending northerly 0.77 of a mile.

The State Department of Transportation or the State's Engineer may issue permits for stated periods of time for moving construction equipment without loads, low-bed trailers with overloads, over-height, over-width or over-length equipment or materials over all State maintained sections described in the "Construction Area" above and in addition may issue permits for stated periods of time for moving overweight vehicles and loads over the section described in (a) above. The right to revoke such a permit at any time is reserved by the State Department of Transportation and the issuance of such permits shall be subject to any Special Provisions or Supplemental Specifications written for this project.

A Temporary Permit for each move may be issued by the State Department of Transportation or the State's Engineer for moving Contractor's construction equipment used on the project which exceeds the legal limits (shovels, bulldozers, etc.) to sources of construction material over highways maintained by the State reasonably within the area of the project.

The Municipal Officers for the **Town of Fort Kent** agreed that a permit will be issued to the Contractor for the purpose of hauling loads in excess of the limits as specified in Title 29, Maine Revised Statues Annotated, on the town ways as described in the "Construction Area" and that single move permits will be issued for moving Contractor's construction equipment used on the project which exceeds the legal limits (shovels, bulldozers, etc.) to sources of construction material over town ways reasonably within the area of the project.

In the event it is necessary to transport gravel, borrow, or other construction material in legally registered vehicles carrying legal loads over town ways, a Contractor's Bond of not more than Nine Thousand ($9,000.00) per kilometer of traveled length may be required by the town, the exact amount of said bond to be determined prior to use of any town way.

The maximum speed limits for trucks on any town way will be forty (40) km per hour [25 mph], unless a higher legal limit is specifically agreed upon in writing by the Municipal Officers concerned.

STP-1132(400)X

PROJECT LOCATION

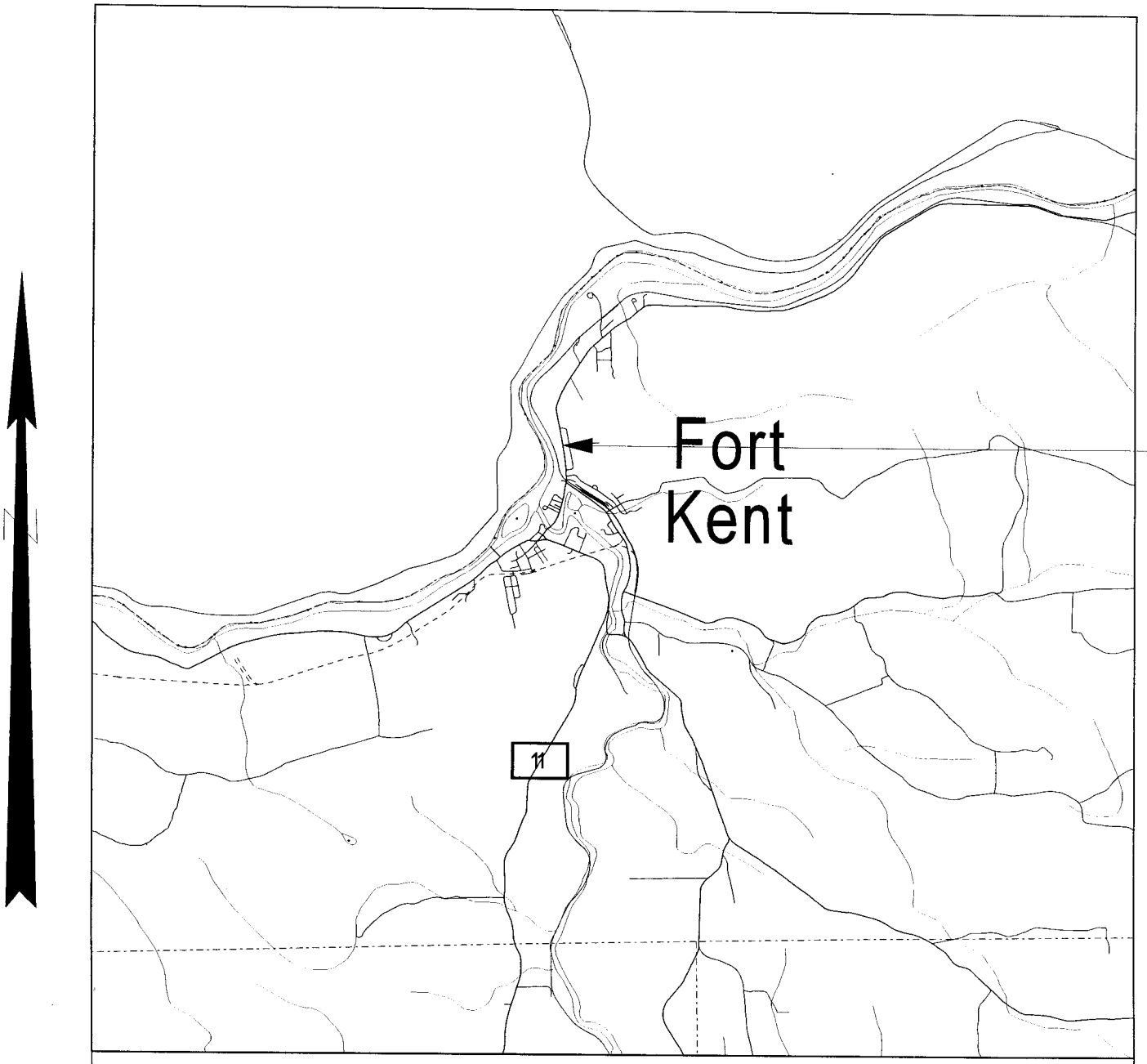

LOCATION MAP

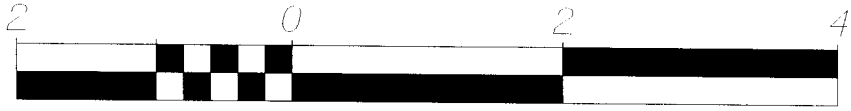

Graphic Scale in Miles

Project No. STP-1132(500)X

SPECIAL PROVISION
CONSTRUCTION AREA

A Construction Area located in the **Town of Fort Kent** has been established by the Maine Department of Transportation in accordance with provisions of Title 29, Section 1703, Maine Revised Statutes Annotated.

The section of highway under construction in Aroostook County, project STP-1132(500)X is located on Route 1, beginning at the southerly end of Fish River Bridge and extending northerly 0.62 of a mile.

The State Department of Transportation or the State's Engineer may issue permits for stated periods of time for moving construction equipment without loads, low-bed trailers with overloads, over-height, over-width or over-length equipment or materials over all State maintained sections described in the "Construction Area" above and in addition may issue permits for stated periods of time for moving overweight vehicles and loads over the section described in (a) above. The right to revoke such a permit at any time is reserved by the State Department of Transportation and the issuance of such permits shall be subject to any Special Provisions or Supplemental Specifications written for this project.

A Temporary Permit for each move may be issued by the State Department of Transportation or the State's Engineer for moving Contractor's construction equipment used on the project which exceeds the legal limits (shovels, bulldozers, etc.) to sources of construction material over highways maintained by the State reasonably within the area of the project.

The Municipal Officers for the **Town of Fort Kent** agreed that a permit will be issued to the Contractor for the purpose of hauling loads in excess of the limits as specified in Title 29, Maine Revised Statues Annotated, on the town ways as described in the "Construction Area" and that single move permits will be issued for moving Contractor's construction equipment used on the project which exceeds the legal limits (shovels, bulldozers, etc.) to sources of construction material over town ways reasonably within the area of the project.

In the event it is necessary to transport gravel, borrow, or other construction material in legally registered vehicles carrying legal loads over town ways, a Contractor's Bond of not more than Nine Thousand ($9,000.00) per kilometer of traveled length may be required by the town, the exact amount of said bond to be determined prior to use of any town way.

The maximum speed limits for trucks on any town way will be forty (40) km per hour [25 mph], unless a higher legal limit is specifically agreed upon in writing by the Municipal Officers concerned.

STP-1132(500)X

PROJECT LOCATION

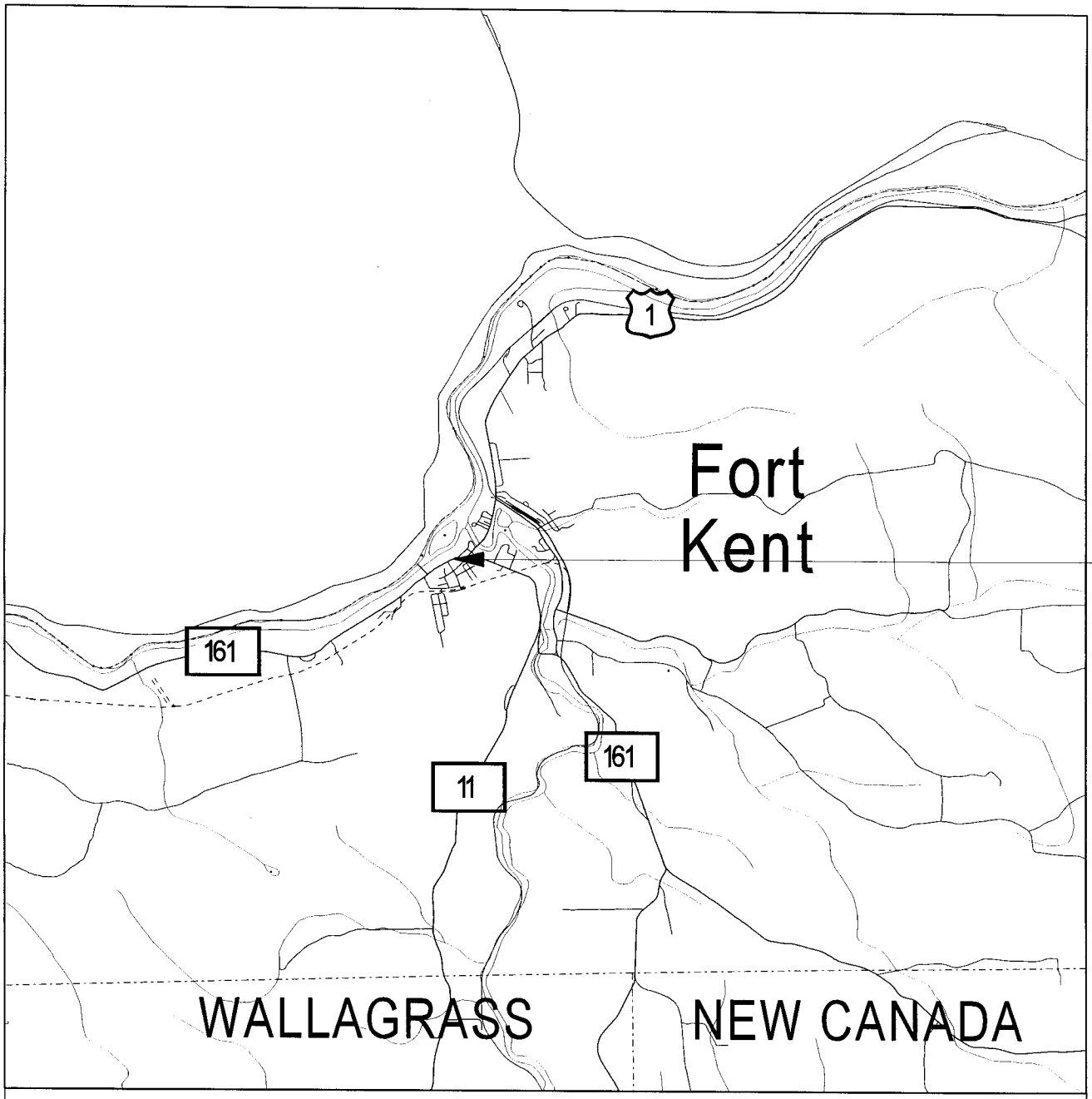

LOCATION MAP

Graphic Scale in Miles

February 7, 1996
Supersedes
May 8, 1995

SPECIAL PROVISION
CONSTRUCTION AREA

Title 29A, M.R.S.A., Subsection 2383. Overlimit movement permits

1. Overlimit movement permits issued by State. The Secretary of State, acting under guidelines and advice of the Commissioner of Transportation, may grant permits to move non-divisible objects having a length, width, height or weight greater than specified in this Title over a way or bridge maintained by the Department of Transportation.

2. Permit Fee. The Secretary of State, with the advice of the Commissioner of Transportation, may set the fee for these permits, at not less than $3, nor more than $15, based on weight, height, length and width.

3. County and municipal permits. A permit may be granted, for a reasonable fee, by county commissioners or municipal officers for travel over a way or bridge maintained by that county or municipality.

4. Permits for weight. A vehicle granted a permit for excess weight must first be registered for the maximum gross vehicle weight allowed for that vehicle.

5. Special mobile equipment. The Secretary of State may grant a permit, for no more than one year, to move pneumatic-tire equipment under its own power, including Class A and Class B special mobile equipment, over ways and bridges maintained by the Department of Transportation. The fee for that permit is $15 for each 30-day period.

6. Scope of permit. A permit is limited to the particular vehicle or object to be moved and particular ways and bridges.

7. Construction permits. A permit for a stated period of time may be issued for loads and equipment employed on public way construction projects, United States Government projects or construction of private ways, when within construction areas established by the Department of Transportation. The Permit:

   A. Must be procured from the municipal officers for a construction area within that municipality;
   B. May require the Contractor to be responsible for damage to ways used in the construction areas and ma provide for:
      (1) Withholding by the agency contraction the work of final payment under contract; or
      (2) The furnishing of a bond by the Contractor to guarantee suitable repair or payment damages.
   C. May be granted by the Department of Transportation or by the state engineer in charge of the construction contract; and
   D. For construction areas, carries no fee and does not come within the scope of this section.

8. Gross vehicle weight permits. The following may grant permits to operate a vehicle having a gross vehicle weight exceeding the prescribed limit:

A. The Secretary of State, with the consent of the Department of Transportation, for state and state aid highways and bridges within city or compact village limits;
B. Municipal officers, for all other ways and bridges within that city and compact village limits; and
C. The county commissioners, for county roads and bridges located in unorganized territory.

9. Pilot vehicles and state police escorts. Pilot vehicles required by a permit must be equipped with warning lights and signs as required by the Secretary of State with the advice of the Department of Transportation.

Warning lights may only be operated and lettering on the signs may only be visible on a pilot vehicle while it is escorting on a public way a vehicle with a permit.

The Secretary of State shall require a State Police escort for a single vehicle or a combination of vehicles of 125 feet or more in length or 16 feet or more in width. The Secretary of State, with the advice of the Commissioner of Transportation, may require vehicles of lesser dimensions to be escorted by the State Police.

The Bureau of State Police shall establish a fee for State Police escorts.

All fees collected must be used to defray the cost of services provided.

With the advice of the Commissioner of Transportation and the Chief of the State Police, the Secretary of State shall establish rules for the operation for the operation of pilot vehicles.

10. Taxes paid. A permit for a mobile home may not be granted unless the applicant provides reasonable assurance that all property taxes, sewage disposal charges and drain and sewer assessments applicable to the mobile home, including those for the current tax year, have been paid or that the mobile home is exempt from those taxes.

1993, c. 683, § S-2, eff. January 1, 1995.

Historical and Statutory Notes

Derivation:

R.S. 1954, c. 22 § 98
Laws 1955, c. 389
Laws 1967, c. 3.
Laws 1971, c. 593, § 22.
Laws 1973, c. 213.
Laws 1975, c. 130, §
Laws 1975, c. 319, § 2 .
Laws 1977, c. 73, § 5.
Laws 1981, c. 413.
Laws 1985, c. 225, § 1
Laws 1987. c. 52.
Laws 1987, 781, § 3.
Laws 1989, c. 866, § B-13.
Laws 1991, c. 388, § 8.
Laws 1993, c. 683, § A-1.
Former 29 M.R.S.A. § 2382.

Cross Reference

Collection by Secretary of State, See 29-A M.R.S.A. § 154.

SPECIAL PROVISION
(Consolidated Special Provisions)

SPECIAL PROVISION SECTION 101
CONTRACT INTERPRETATION

101.2 Definitions - Closeout Documentation

Replace the sentence "A letter stating the amount….. DBE goals." with "DBE Goal Attainment Verification Form"

SPECIAL PROVISION SECTION 102
DELIVERY OF BIDS
(Location and Time)

102.7.1 Location and Time Add the following sentence "As a minimum, the Bidder will submit a Bid Package consisting of the Notice to Contractors, the completed Acknowledgement of Bid Amendments & Submission of Bid Bond Validation Number form, the completed Schedule of Items, 2 copies of the completed Agreement, Offer, & Award form, a Bid Bond or Bid Guarantee, and any other Certifications or Bid Requirements listed in the Bid Book."

SPECIAL PROVISION SECTION 103
AWARD AND CONTRACTING

103.3.1 Notice and Information Gathering

Change the first paragraph to read as follows: "After Bid Opening and as a condition for Award of a Contract, the Department may require an Apparent Successful Bidder to demonstrate to the Department's satisfaction that the Bidder is responsible and qualified to perform the Work."

SPECIAL PROVISION SECTION 105
GENERAL SCOPE OF WORK

105.6.2 Contractor Provided Services

Change the first paragraph by the addition of the following as the second sentence: "The Contractor is also responsible for providing construction centerline, or close reference points, for all Utility Facilities relocations and adjustments as necessary to complete the Work."

SPECIAL PROVISION SECTION 106
QUALITY

106.6 Acceptance Add the following to paragraph 1 of A: "This includes Sections 401 - Hot Mix Asphalt, 402 - Pavement Smoothness, and 502 - Structural Concrete - Method A - Air Content."

Add the following to the beginning of paragraph 3 of A: "For pay factors based on Quality Level Analysis, and"

SPECIAL PROVISION SECTION 107
TIME

107.3.1 General Add the following: "If a Holiday occurs on a Sunday, the following Monday shall be considered a Holiday. Sunday or Holiday work must be approved by the Department, except that the Contractor may work on Martin Luther King Day, President's Day, Patriot's Day, the Friday after Thanksgiving, and Columbus Day without the Department's approval."

SPECIAL PROVISION SECTION 108
PAYMENT

108.4 Payment for Materials Obtained and Stored First paragraph, second sentence, delete the words "…Delivered on or near the Work site at acceptable storage places."

SPECIAL PROVISION SECTION 109
CHANGES

109.1.1 Changes Permitted Add the following to the end of the paragraph: "There will be no adjustment to Contract Time due to an increase or decrease in quantities, compared to those estimated, except as addressed through Contract Modification(s)."

109.1.2 Substantial Changes to Major Items Add the following to the end of the paragraph: "Contract Time adjustments may be made for substantial changes to Major Items when the change affects the Critical Path, as determined by the Department"

109.4.4 Investigation / Adjustment In the third sentence, delete the words "subsections (A) - (E)"

109.7.2 Basis of Payment Replace with the following: "Equitable Adjustments will be established by mutual Agreement for compensable items listed in Section 109.7.3-Compensable Items, based upon Unit or Lump Sum Prices. If Agreement cannot be reached, the Contractor shall accept payment on a Force Account basis as provided in Section 109.7.5 - Force Account Work, as full and complete compensation for all Work relating to the Equitable Adjustment."

109.7.3 Compensable Items Replace with the following: "The Contractor is entitled to compensation for the following items, with respect to agreed upon Unit or Lump Sum Prices:

1. Labor expenses for non-salaried Workers and salaried foremen.

2. Costs for Materials.

3. A markup on the totals of Items 1 and 2 of this subsection 109.7.3 for home office overhead and profit of the Contractor, its Subcontractors and suppliers, and any lower tier Subcontractors or suppliers, with no mark-ups on mark-ups.

4. Cost for Equipment, based on Blue Book Rates or leased rates, as set forth in Section 109.7.5(C), or the Contractor's Actual Costs.

5. Costs for extended job-site overhead.

6. Time.

7. Subcontractor quoted Work, as set forth below in Section 109.7.5 (F)."

109.7.5 Force Account Work

C. Equipment

Paragraph 2, delete sentence 1 which starts; "Equipment leased…."

Paragraph 6, change sentence 2 from "The Contractor may furnish…" to read "If requested by the Department, the Contractor will produce cost data to assist the Department in the establishment of such rental rate, including all records that are relevant to the Actual Costs including rental Receipts, acquisition costs, financing documents, lease Agreements, and maintenance and operational cost records."

Add the following paragraph; "Equipment leased by the Contractor for Force Account Work and actually used on the Project will be paid for at the actual invoice amount plus 10% markup for administrative costs."

Add the following section;

"F. Subcontractor Quoted Work When accomplishing Force Account Work that utilizes Subcontractor quoted Work, the Contractor will be allowed a maximum markup of 5% for profit and overhead."

SPECIAL PROVISION SECTION 401
HOT MIX ASPHALT PAVEMENT

401.18 Quality Control Method A & B Make the following change to paragraph a. QCP Administrator; in the final sentence, change "…certified as a Plant Technician or Paving Inspector…" to "…certified as a Quality Assurance Technologist…"

401.201 Method A Under a. Lot Size, add the following; "Each lot will be divided into a minimum of four sublots for mix properties and five sublots for percent TMD."

SPECIAL PROVISION SECTION 402
PAVEMENT SMOOTHNESS

Add the following: "Projects to have their pavement smoothness analyzed in accordance with this Specification will be so noted in Special Provision 403 - Bituminous Box."

"402.02 Lot Size Lot size for smoothness will be 1000 lane-meters [3000 lane-feet]. A sublot will consist of 20 lane-meters [50 lane-feet]. Partial lots will be included in the previous lot if less than one-half the size of a normal lot. If greater than one-half the normal lot size, it will be tested as a separate lot."

SPECIAL PROVISION SECTION 502
STRUCTURAL CONCRETE

502.0502 Quality Assurance Method A - Rejection by Resident Change the first sentence to read: "For an individual sublot with test results failing to meet the criteria in Table #1, or if the calculated pay factor for Air Content is less than 0.80……"

502.0503 Quality Assurance Method B - Rejection by Resident Change the first sentence to read: "For material represented by a verification test with test results failing to meet the criteria in Table #1, the Department will……"

502.0505 Resolution of Disputed Acceptance Test Results Combine the second and third sentence to read: "Circumstances may arise, however, where the Department may ……"

SPECIAL PROVISION SECTION 504
REINFORCING STEEL

504.18 Plates for Fabricated Members Change the second paragraph, first sentence from: "…ASTM A 898/A 898 M…" to "…ASTM A 898/A 898 M or ASTM A 435/A 435 M as applicable and…"

SPECIAL PROVISION SECTION 535
PRECAST, PRESTRESSED CONCRETE SUPERSTRUCTURE

535.02 Materials Change "Steel Strand for Concrete Reinforcement" to "Steel Strand." Add the following to the beginning of the third paragraph; "Concrete shall be Class P conforming to the requirements in this section. 28 day compressive strength shall be as stated on the plans. Coarse aggregate…."

535.26 Lateral Post-Tensioning Replace the first paragraph; "A final tension…" with "Overstressing strands for setting losses cannot be accomplished for chuck to chuck lengths of 7.6 m [25 ft] and less. In such instances, refer to the Plans for all materials and methods. Otherwise, post-tensioning shall be in accordance with PCI standards and shall provide the anchorage force noted in the Plans. The applied jacking force shall be no less than 100% of the design jacking force."

SPECIAL PROVISION SECTION 604
MANHOLES, INLETS, AND CATCH BASINS

604.02 Materials Add the following:

"Tops and Traps	712.07
Corrugated Metal Units	712.08
Catch Basin and Manhole Steps	712.09"

SPECIAL PROVISION SECTION 615
LOAM

615.02 Materials Make the following change:

Organic Content	Percent by Volume
Humus	"5% - 10%", as determined by Ignition Test

SPECIAL PROVISION SECTION 618
SEEDING

618.01 Description Change the first sentence to read as follows: "This work shall consist of furnishing and applying seed ….." Also remove ",and cellulose fiber mulch" from 618.01(a).

618.03 Rates of Application In 618.03(a), remove the last sentence and replace with the following: "These rates shall apply to Seeding Method 2, 3, and Crown Vetch."

In 618.03(c) "1.8 kg [4 lb]/unit." to "1.95 kg [4 lb]/unit."

618.09 Construction Method In 618.09(a) 1, sentence two, replace "100 mm [4 in]" with "25 mm [1 in] (Method 1 areas) and 50 mm [2 in] (Method 2 areas)"

618.15 Temporary Seeding Change the Pay Unit from Unit to Kg [lb].

SPECIAL PROVISION SECTION 620
GEOTEXTILES

620.03 Placement Section (c)

Title: Replace "Non-woven" in title with "Erosion Control".
First Paragraph: Replace first word "Non-woven" with "Woven monofilament".
Second Paragraph: Replace second word "Non-woven" with "Erosion Control".

620.07 Shipment, Storage, Protection and Repair of Fabric Section (a)

Replace the third sentence with the following: "Damaged geotextiles, as identified by the Resident, shall be repaired immediately."

620.09 Basis of Payment

Pay Item 620.58: Replace "Non-woven" with "Erosion Control"
Pay Item 620.59: Replace "Non-woven" with "Erosion Control"

SPECIAL PROVISION SECTION 626
HIGHWAY SIGNING

626.034 Concrete Foundations Add to the following to the end of the second paragraph: "Pre-cast and cast-in-place foundations shall be warranteed against leaning and corrosion for two years after the project is completed. If the lean is greater than 2 degrees from normal or the foundation is spalling within the first two years, the Contractor shall replace the foundation at no extra cost."

SPECIAL PROVISION SECTION 637
DUST CONTROL

637.06 Basis of Payment Add the following after the second sentence of the third paragraph: "Failure by the Contractor to follow Standard Specification or Special Provision - Section 637 and/or the Contractor's own Soil Erosion and Pollution Control Plan concerning Dust Control and/or the Contractor's own Traffic Control Plan concerning Dust Control and/or visible evidence of excessive dust problems, as determined by the Resident, will result in a reduction in payment, computed by reducing the Lump Sum Total by 5% per occurrence per day. The Department's Resident or any other representative of the Department reserves the right to suspend the work at any time and request a meeting to discuss violations and remedies. The Department shall not be held responsible for any delay in the work due to any suspension under this item. Additional penalties may also be assessed in accordance with Special Provision 652 - Work Zone Traffic Control and Standard Specification 656 - Temporary Soil Erosion and Water Pollution Control."

SPECIAL PROVISION SECTION 639
ENGINEERING FACILITIES

639.04 Field Offices Change the forth to last paragraph from: "The Contractor shall provide a fully functional desktop copier…" to "….desktop copier/scanner…"

SPECIAL PROVISION SECTION 652
MAINTENANCE OF TRAFFIC

652.8.2 Other Items Replace the last paragraph with the following: "There will be no payment made under any 652 pay items after the expiration of the adjusted total contract time."

SPECIAL PROVISION SECTION 656
TEMPORARY SOIL EROSION AND WATER POLLUTION CONTROL

656.5.1 If Pay Item 656.75 Provided Replace the second paragraph with the following: "Failure by the Contractor to follow Standard Specification or Special Provision - Section 656

and/or the Contractor's own Soil Erosion and Pollution Control Plan will result in a reduction in payment, computed by reducing the Lump Sum Total by 5% per occurrence per day. The Department's Resident or any other representative of the Department reserves the right to suspend the work at any time and request a meeting to discuss violations and remedies. The Department shall not be held responsible for any delay in the work due to any suspension under this item."

SPECIAL PROVISION SECTION 703
AGGREGATES

703.06 Aggregate for Base and Subbase Delete the first paragraph: "The material shall have…" and replace with "The material shall have a minimum degradation value of 15 as determined by Washington State DOT Test Method T113, Method of Test for Determination of Degradation Value (March 2002 version), except that the reported degradation value will be the result of testing a single specimen from that portion of a sample that passes the 12.5 mm [½ in] sieve and is retained on the 2.00 mm [No. 10] sieve, minus any reclaimed asphalt pavement used."

703.07 Aggregates for HMA Pavements Delete the forth paragraph: "The composite blend shall have…" and replace with "The composite blend, minus any reclaimed asphalt pavement used, shall have a Micro-Deval value of 18.0 or less as determined by AASHTO TP 58. In the event the material exceeds the Micro Deval limit, a Washington Degradation test shall be performed. The material shall be acceptable if it has a value of 30 or more as determined by Washington State DOT Test Method T 113, Method of Test for Determination of Degradation Value (March 2002 version) except that the reported degradation value will be the result of testing a single composite specimen from that portion of the sample that passes the 12.5mm [1/2 inch] sieve and is retained on the 2.00mm [No 10] sieve, minus any reclaimed asphalt pavement used."

703.22 Underdrain Backfill Material Change the first paragraph from "…for Underdrain Type B…" to "…for Underdrain Type B and C…"

SPECIAL PROVISION SECTION 709
REINFORCING STEEL AND WELDED STEEL WIRE FABIC

709.03 Steel Strand Change the second paragraph from "…shall be 12mm [½ inch] AASHTO M203M/M203 (ASTM A416/A416M)…" to "…shall be 15.24 mm [0.600 inch] diameter AASHTO M203 (ASTM A416)…"

SPECIAL PROVISION SECTION 712
MISCELLANEOUS HIGHWAY MATERIALS

Add the following:

"712.07 Tops, and Traps These metal units shall conform to the plan dimensions and to the following specification requirements for the designated materials.

Gray iron castings shall conform to the requirements of AASHTO M105, Class 30, unless otherwise designated.

Carbon steel castings shall conform to the requirements of AASHTO M103/M103M. Grade shall be 450-240 [65-35] unless otherwise designated.

Structural steel shall conform to the requirements of AASHTO M183/M183M or ASTM A283/A283M, Grade B or better. Galvanizing, where specified for these units, shall conform to the requirements of AASHTO M111.

712.08 Corrugated Metal Units The units shall conform to plan dimensions and the metal to AASHTO M36/M36M. Bituminous coating, when specified, shall conform to AASHTO M190 Type A.

712.09 Catch Basin and Manhole Steps Steps for catch basins and for manholes shall conform to ASTM C478M [ASTM C478], Section 13 for either of the following material:

(a) Aluminum steps-ASTM B221M, [ASTM B211] Alloy 6061-T6 or 6005-T5.

(b) Reinforced plastic steps Steel reinforcing bar with injection molded plastic coating copolymer polypropylene. Polypropylene shall conform to ASTM D 4101.

712.23 Flashing Lights Flashing Lights shall be power operated or battery operated as specified.

(a) Power operated flashing lights shall consist of housing, adapters, lamps, sockets, reflectors, lens, hoods and other necessary equipment designed to give clearly visible signal indications within an angle of at least 45 degrees and from 3 to 90 m [10 to 300 ft] under all light and atmospheric conditions.

Two circuit flasher controllers with a two-circuit filter capable of providing alternate flashing operations at the rate of not less than 50 nor more than 60 flashes per minute shall be provided.

The lamps shall be 650 lumens, 120 volt traffic signal lamps with sockets constructed to properly focus and hold the lamp firmly in position.

The housing shall have a rotatable sun visor not less than 175 mm [7 in] in length designed to shield the lens.

Reflectors shall be of such design that light from a properly focused lamp will reflect the light rays parallel. Reflectors shall have a maximum diameter at the point of contact with the lens of approximately 200 mm [8 in].

The lens shall consist of a round one-piece convex amber material which, when mounted, shall have a visible diameter of approximately 200 mm [8 in]. They shall distribute light and not diffuse it. The distribution of the light shall be asymmetrical in a downward direction. The light distribution of the lens shall not be uniform, but shall consist of a small high intensity portion with narrow distribution for long distance throw and a larger low intensity portion with wide distribution for short distance throw. Lenses shall be marked to indicate the top and bottom of the lens.

(b) Battery operated flashing lights shall be self- illuminated by an electric lamp behind the lens. These lights shall also be externally illuminated by reflex-reflective elements built into the lens to enable it to be seen by reflex-reflection of the light from the headlights of oncoming traffic. The batteries must be entirely enclosed in a case. A locking device must secure the case. The light shall have a flash rate of not less than 50 nor more than 60 flashes per minute from minus 30 °C [minus 20 °F] to plus 65 °C [plus 150 °F]. The light shall have an on time of not less than 10 percent of the flash cycle. The light beam projected upon a surface perpendicular to the axis of the light beam shall produce a lighted rectangular projection whose minimum horizontal dimension shall be 5 degrees each side of the horizontal axis. The effective intensity shall not have an initial value greater than 15.0 candelas or drop below 4.0 candelas during the first 336 hours of continuous flashing. The illuminated lens shall appear to be uniformly bright over its entire illuminated surface when viewed from any point within an angle of 9 degrees each side of the vertical axis and 5 degrees each side of the horizontal axis. The lens shall not be less than 175 mm [7 in] in diameter including a reflex-reflector ring of 13 mm [½ in] minimum width around the periphery. The lens shall be yellow in color and have a minimum relative luminous transmittance of 0.440 with a luminance of 2854° Kelvin. The lens shall be one-piece construction. The lens material shall be plastic and meet the luminous transmission requirements of this specification. The case containing the batteries and circuitry shall be constructed of a material capable of withstanding abuse equal to or greater than 1.21 mm thick steel [No. 18 U.S. Standard Gage Steel]. The housing and the lens frame, if of metal shall be properly cleaned, degreased and pretreated to promote adhesion. It shall be given one or more coats of enamel which, when dry shall completely obscure the metal. The enamel coating shall be of such quality that when the coated case is struck a light blow with a sharp tool, the paint will not chip or crack and if scratched with a knife will not powder. The case shall be so constructed and closed as to exclude moisture that would affect the proper operation of light. The case shall have a

weep hole to allow the escape of moisture from condensation. Photoelectric controls, if provided, shall keep the light operating whenever the ambient light falls below 215 lx [20 foot candles]. Each light shall be plainly marked as to the manufacturer's name and model number.

If required by the Resident, certification as to conformance to these specifications shall be furnished based on results of tests made by an independent testing laboratory. All lights are subject to random inspection and testing. All necessary random samples shall be provided to the Resident upon request without cost to the Department. All such samples shall be returned to the Contractor upon completion of the tests.

712.32 Copper Tubing Copper tubing and fittings shall conform to the requirements of ASTM B88M Type A [ASTM B88, Type K] or better.

712.33 Non-metallic Pipe, Flexible Non-metallic pipe and pipe fittings shall be acceptable flexible pipe manufactured from virgin polyethylene polymer suitable for transmitting liquids intended for human or animal consumption.

712.34 Non-metallic Pipe, Rigid Non-metallic pipe shall be Schedule 40 polyvinylchloride (PVC) that meets the requirement of ASTM D1785. Fittings shall be of the same material.

712.341 Metallic Pipe Metallic pipe shall be ANSI, Standard B36.10, Schedule 40 steel pipe conforming to the requirements of ASTM A53 Types E or S, Grade B. End plates shall be steel conforming to ASTM A36/A36M.

Both the sleeve and end plates shall be hot dip galvanized. Pipe sleeve splices shall be welded splices with full penetration weld before galvanizing.

712.35 Epoxy Resin Epoxy resin for grouting or sealing shall consist of a mineral filled thixotropic, flexible epoxy resin having a pot life of approximately one hour at 10°C [50°F]. The grout shall be an approved product suitable for cementing steel dowels into the preformed holes of curb inlets and adjacent curbing. The sealant shall be an approved product, light gray in color and suitable for coating the surface.

712.36 Bituminous Curb The asphalt cement for bituminous curb shall be of the grade required for the wearing course, or shall be Viscosity Grade AC-20 meeting the current requirements of Subsection 702.01 Asphalt Cement. The aggregate shall conform to the requirements of Subsection 703.07. The coarse aggregate portion retained on the 2.36 mm [No. 8] sieve may be either crushed rock or crushed gravel.

The mineral constituents of the bituminous mixture shall be sized and graded and combined in a composite blend that will produce a stable durable curbing with an acceptable texture.

Bituminous material for curb shall meet the requirements of Section 403 - Hot Bituminous Pavement.

712.37 Precast Concrete Slab Portland cement concrete for precast slabs shall meet the requirements of Section 502 - Structural Concrete, Class A.

The slabs shall be precast to the dimension shown on the plans and cross section and in accordance with the Standard Detail plans for Concrete Sidewalk Slab. The surface shall be finished with a float finish in accordance with Subsection 502.14(c). Lift devices of sufficient strength to hold the slab while suspended from cables shall be cast into the top or back of the slab.

712.38 Stone Slab Stone slabs shall be of granite from an acceptable source, hard, durable, predominantly gray in color, free from seams which impair the structural integrity and be of smooth splitting character. Natural color variations characteristic of the deposit will be permitted. Exposed surfaces shall be free from drill holes or indications of drill holes. The granite slabs in any one section of backslope must be all the same finish.

The granite slabs shall be scabble dressed or sawed to an approximately true plane having no projections or depressions over 13 mm [½ in] under a 600 mm [2 ft] straightedge or over 25 mm [1 in] under a 1200 mm [4 ft] straightedge. The arris at the intersection of the top surface and exposed front face shall be pitched so that the arris line is uniform throughout the length of the installed slabs. The sides shall be square to the exposed face unless the slabs are to be set on a radius or other special condition which requires that the joints be cut to fit, but in any case shall be so finished that when the stones are placed side by side no space more than 20 mm [3/4 in] shall show in the joint for the full exposed height.

Liftpin holes in all sides will be allowed except on the exposed face.

SPECIAL PROVISION SECTION 717
ROADSIDE IMPROVEMENT MATERIAL

717.05 Mulch Binder. Change the third sentence to read as follows:

"Paper fiber mulch may be used as a binder at the rate of 2.3 kg/unit [5 lb/unit]."

Towns: **St. Francis – St. John Rt. 161**
Projects: **STP-1125(600)X, PIN 11256.00**
STP-1125(700)X, PIN 11257.00
STP-1125(800)X, PIN 11258.00
STP-1125(900)X, PIN 11259.00
Date: **March 9, 2004**

SPECIAL PROVISIONS
SECTION 104
Utilities

MEETING

A Pre-construction Utility Conference, as defined in Subsection 104.4.6 of the Standard Specifications **is** required.

GENERAL INFORMATION

These Special Provisions outline the arrangements that have been made by the Department for utility and/or railroad work to be undertaken in conjunction with this project. The following list identifies all known utilities or railroads having facilities presently located within the limits of this project or intending to install facilities during project construction
.

Overview:

Utility/Railroad	Aerial	Underground
Maine Public Service Company	X	X
Adelphia	X	
Fairpoint (Northland Telephone)	X	X

Temporary utility adjustments are **not** anticipated. If temporary relocation becomes necessary, sufficient time will need to be allowed prior to the construction for all required temporary relocation.

All utility crossings over highways will provide not less than 18 feet vertical clearance over existing ground in cut or over finished grade in fill, during construction of this project.

Any times and dates mentioned are estimates only and are dependent upon favorable weather, working conditions, and freedom from emergencies. The Contractor shall have no claim against the Department if they are exceeded.

Manholes, valve boxes, service connections, and similar incidental utility plant are to be adjusted by the appropriate utility in cooperation with work being done by the Contractor.

AERIAL

No Aerial Utility adjustments are anticipated as part of this project. All above ground utility locations (hydrants, poles, guys, etc.) will be reviewed for compliance with the Department's Above Ground Pole Policy following the completion of the paving operation. Any above ground utility locations not meeting the Department's Above Ground Pole Policy will require relocation to the proper offset.

Towns: **St. Francis – St. John Rt. 161**
Projects: **STP-1125(600)X, PIN 11256.00**
STP-1125(700)X, PIN 11257.00
STP-1125(800)X, PIN 11258.00
STP-1125(900)X, PIN 11259.00
Date: **March 9, 2004**

SUBSURFACE

Fairpoint (Northland Telephone) has a buried cable the within the project limits of both projects. Contractor shall notify **Fairpoint (Northland Telephone)** at least three (3) days prior to any excavating operations to allow the utility to determine the cable locations in that area. Any damage to the buried cable caused by the Contractor during construction shall be repaired at the contractor's expense. The contact for Fairpoint **(Northland Telephone)** is Joe Martin at 834-9941

UTILITY SIGNING

Any utility working within the construction limits of this project shall ensure that the traveling public is adequately protected at all times. All work areas shall be signed, lighted, and traffic flaggers employed as determined by field conditions. All traffic controls shall be in accordance with the latest edition of the Manual on Uniform Traffic Control Devices for Streets and Highways, as issued by the Federal Highway Administration.

SAFE PRACTICES AROUND UTILITY FACILITIES

The Contractor shall be responsible for complying with M.R.S.A. Title 35-A, Chapter 7-A Sections 751 - 761 Overhead High-Voltage Line Safety Act. Prior to commencing any work that may come within ten (10) feet of any aerial electrical line; the Contractor shall notify the aerial utilities as per Section 757 of the above act.

DIG SAFE

The Contractor shall be responsible for determining the presence of underground utility facilities prior to commencing any excavation work and shall notify utilities of proposed excavation in accordance with M.R.S.A. Title 23 §3360-A, Maine "Dig Safe" System.

MAINTAINING UTILITY LOCATION MARKINGS

The Contractor will be responsible for maintaining the buried utility location markings following the initial locating by the appropriate utility or their designated representative.

THE CONTRACTOR SHALL PLAN AND CONDUCT HIS WORK ACCORDINGLY.

The following utilities are known to be located on this project:

Maine Public Service Company	Ronald Bartley	496-0915
Adelphia	Steve Bossie	1-877-500-1055 ext. 2421
	Martin Soucy (Location)	728-6322
Northland Telephone	Joe Martin	834-9941

Towns: **Fort Kent, Rt. 1**
Projects: **STP-1132(400)X, PIN 11324.00**
STP- 1132(500)X, PIN 11325.00
Date: **March 9, 2004**

SPECIAL PROVISIONS
SECTION 104
Utilities

MEETING

A Pre-construction Utility Conference, as defined in Subsection 104.4.6 of the Standard Specifications **is** required.

GENERAL INFORMATION

These Special Provisions outline the arrangements that have been made by the Department for utility and/or railroad work to be undertaken in conjunction with this project. The following list identifies all known utilities or railroads having facilities presently located within the limits of this project or intending to install facilities during project construction
.

Overview:

Utility/Railroad	Aerial	Underground
Maine Public Service Company	X	X
Adelphia	X	
Northland Telephone	X	
Fort Kent Water & Wastewater Department		X

Temporary utility adjustments are **not** anticipated. If temporary relocation becomes necessary, sufficient time will need to be allowed prior to the construction for all required temporary relocation.

All utility crossings over highways will provide not less than 18 feet vertical clearance over existing ground in cut or over finished grade in fill, during construction of this project.

Any times and dates mentioned are estimates only and are dependent upon favorable weather, working conditions, and freedom from emergencies. The Contractor shall have no claim against the Department if they are exceeded.

Manholes, valve boxes, service connections, and similar incidental utility plant are to be adjusted by the appropriate utility in cooperation with work being done by the Contractor.

AERIAL

No Aerial Utility adjustments are anticipated as part of this project. All above ground utility locations (hydrants, poles, guys, etc.) will be reviewed for compliance with the Department's Above Ground Pole Policy following the completion of the paving operation. Any above ground utility locations not meeting the Department's Above Ground Pole Policy will require relocation to the proper offset.

Towns: **Fort Kent, Rt. 1**
Projects: **STP-1132(400)X, PIN 11324.00**
STP- 1132(500)X, PIN 11325.00
Date: **March 9, 2004**

SUBSURFACE

Contractor shall notify **Fort Kent Water & Wastewater Departmen**t at least five days prior to any excavating operations to allow the utility to determine facility locations in that area. The Sewer District has 5 manholes and the Water District has 31 water gates that will need to be worked around during the grinding and or shimming process. The utilities will require 10 working days to raise their respective structures to grade before final paving but after the grinding and or shim process. Additional days may be required for repairs to any structures that are found to be broken or not operating properly. The contact for **Fort Kent Water & Wastewater Department** is **Mark Soucy** at **834-3463**

UTILITY SIGNING

Any utility working within the construction limits of this project shall ensure that the traveling public is adequately protected at all times. All work areas shall be signed, lighted, and traffic flaggers employed as determined by field conditions. All traffic controls shall be in accordance with the latest edition of the Manual on Uniform Traffic Control Devices for Streets and Highways, as issued by the Federal Highway Administration.

SAFE PRACTICES AROUND UTILITY FACILITIES

The Contractor shall be responsible for complying with M.R.S.A. Title 35-A, Chapter 7-A Sections 751 - 761 Overhead High-Voltage Line Safety Act. Prior to commencing any work that may come within ten (10) feet of any aerial electrical line; the Contractor shall notify the aerial utilities as per Section 757 of the above act.

DIG SAFE

The Contractor shall be responsible for determining the presence of underground utility facilities prior to commencing any excavation work and shall notify utilities of proposed excavation in accordance with M.R.S.A. Title 23 §3360-A, Maine "Dig Safe" System.

MAINTAINING UTILITY LOCATION MARKINGS

The Contractor will be responsible for maintaining the buried utility location markings following the initial locating by the appropriate utility or their designated representative.

THE CONTRACTOR SHALL PLAN AND CONDUCT HIS WORK ACCORDINGLY.

The following utilities are known to be located on this project:

Maine Public Service Company	Ronald Bartley	496-0915
Adelphia	Steve Bossie	1-877-500-1055 ext. 2421
	Martin Soucy (Location)	728-6322
Northland Telephone	Joe Martin	834-9941
Fort Kent Water & Wastewater Dept.	Mark Soucy	834-3463

SPECIAL PROVISION
SECTION 107
SCHEDULING OF WORK

Replace Section 107.4.2 with the following:

"107.4.2 Schedule of Work Required Within 21 Days of Contract Execution and before beginning any on-site activities, the Contractor shall provide the Department with its Schedule of Work. The Contractor shall plan the Work, including the activity of Subcontractors, vendors, and suppliers, such that all Work will be performed in Substantial Conformity with its Schedule of Work. The Schedule must include sufficient time for the Department to perform its functions as indicated in this Contract, including QA inspection and testing, approval of the Contractor's TCP, SEWPCP and QCP, and review of Working Drawings.

At a minimum, the Schedule of Work shall include a bar chart which shows the major Work activities, milestones, durations, and a timeline. Milestones to be included in the schedule include: (A) start of Work, (B) beginning and ending of planned Work suspensions, (C) Completion of Physical Work, and (D) Completion. If the Contractor Plans to Complete the Work before the specified Completion date, the Schedule shall so indicate.

Any restrictions that affect the Schedule of Work such as paving restrictions or In-Stream Work windows must be charted with the related activities to demonstrate that the Schedule of Work complies with the Contract.

The Department will review the Schedule of Work and provide comments to the Contractor within 20 days of receipt of the schedule. The Contractor will make the requested changes to the schedule and issue the finalized version to the Department."

11256.00, 11257.00,
11258.00, 11259.00,
11324.00, 11325.00,
12173.00
4/5/04

Special Provision
Section 107
Prosecution and Progress
(Contract Time)

1. **The contractor will be allowed to commence work on or after June 1, 2004 provided that all required plans/submittals have been received and approved by the MDOT.**

2. **Only one paving operation will be allowed excluding hand placed paving unless approved by the Resident.**

3. **A 24 hour notice will be required for any changes in the work schedule.**

4. **For every weekday not worked once operations commence, the contractor will be charged liquidated damages in the amount of $500 (excluding inclement weather days).**

5. **The completion date for this contract is September 17, 2004.**

February 11, 2004
Supersedes December 10, 2003

SPECIAL PROVISION
SECTION 309
FULL DEPTH RECYCLED PAVEMENT
(With Foamed Asphalt)

309.01 Description This work shall consist of pulverizing a portion of the existing roadway structure into a homogenous mass, treating the pulverized material with the foamed asphalt process, and the placing and compacting of this material to the lines, grades, and dimensions shown on the plans or established by the Resident.

MATERIALS

309.020 Pulverized Material Pulverized material shall consist of the entire existing bituminous pavement and, if specified, a designated portion of the underlying gravel, pulverized and blended into a homogenous mass. Pulverized material will be processed to 100 percent passing a 50 mm [2 in] square mesh sieve.

309.021 New Aggregate and Additional Recycled Material New aggregate, if required by the contract or job mix, shall meet the requirements of Section 411.02 Untreated Aggregate Surface Course. New aggregate required as part of the job mix shall be considered part of the 309 item and will not be measured for payment. New aggregate required to restore grade and/or cross-slope shall be measured for payment.

Recycled material, if required, shall consist of material from the project or from off-site stockpiles that have been processed, prior to use to 100 percent passing a 50 mm [2 in] square mesh sieve. The Resident shall conditionally accept recycled material at the source; it shall be free of winter sand, granular fill, construction debris, and other materials not generally considered to be bituminous pavement.

309.022 Asphalt Binder The asphalt binder used in the foamed asphalt process shall be Performance Grade 64-28 meeting the requirements of AASHTO M320.

309.023 Portland Cement The Portland Cement shall be Type I or II meeting the requirements of AASHTO M85.

309.024 Lime Lime for soil stabilization shall meet the requirements of AASHTO M216.

309.025 Crusher Dust Crusher dust, if required by the job mix, shall be free from friable or deleterious material, including excessive mica, and shall meet the following gradation requirements:

Sieve Size	Percent Passing
12.5 mm [½ in]	100
0.075 mm [No. 200]	10 - 15

309.026 Water Water shall be clean and free from deleterious concentrations of acids, alkalis, salts or other organic or chemical substances.

EQUIPMENT

309.030 Pulverizer The modified milling or recycling machine shall, as a minimum, have the following features:

A. A minimum power capability of 600 horsepower.
B. Two microprocessor-controlled systems, complete with 2 independent pumping systems and spraybars, to regulate the application of foamed bitumen stabilizing agent, separate from water (for increasing the moisture content of the recycled material), in relation to the forward speed and mass of the material being recycled.
C. Two spray bars shall each be fitted with self-cleaning nozzles at a maximum spacing of one nozzle for each 155 mm [6 in] width of the chamber.
D. The foamed bitumen shall be produced at the spraybar in individual expansion chambers into which both hot bitumen and water are injected under pressure through individual and separate small orifices that promote atomization. The rate of addition of water into hot bitumen shall be kept at a constant (percentage by mass of bitumen) by the same microprocessor.
E. An inspection (or test) nozzle shall be fitted at one end of the spraybar that produces a representative sample of foamed bitumen.
F. An electrical heating system capable of maintaining the temperature of all bitumen flow components above 150°C [300°F].
G. A single bitumen feed pipe installed between the modified milling or recycling machine and the supply tanker. Circulating systems that incorporate a return pipe to the supply tanker shall not be used.
H. The recycler shall be fitted with a front breaker bar system to ensure that the reclaimed material is broken down to the sizing outlined in 309.020.

309.031 Liquid Mixer Unit or Distributor Only tankers with a capacity exceeding 10,000 L [2500 gal] shall be used to supply the recycling machine with bitumen. Each tanker shall be fitted with two recessed pin-type tow hitches, one in front and the other behind, thereby allowing the tanker to be pushed from behind by the recycling machine, and to push a water tanker in front. No leaking tanker will be permitted on the job site. In addition, each tanker shall be equipped with the following:

A. A thermometer to show the temperature of the contents in the bottom third of the tank.
B. A rear feed valve, with a minimum internal diameter of 75 mm [3 in], capable of draining the contents of the tank when fully opened.
C. Insulation to retain heat.
D. A calibrated dipstick marked at intervals of no more than 100 L [25 gal], for measuring the contents of the tank.

309.032 Placement Equipment Placement of the full depth recycled material to the required slope and grade shall be done with an approved highway grader or by another method approved by the Resident.

309.033 Rollers The full depth recycled material shall be rolled with a vibratory pad/tamping foot roller, a vibratory steel drum soil compactor and a Type II pneumatic tire roller. The pad/tamping foot roller drum shall have a minimum of 112 tamping feet 73 mm [3 in] in height, a minimum contact area per foot of 110 cm^2 [17 in^2], and a minimum width of 2.15 m [84 in]. The vibratory steel drum roller shall have a minimum 2.15 meter [84 in] width single drum. The pneumatic tire roller shall meet the requirements of Section 401.10 and the minimum allowable tire pressure shall be 586 kPa [85 psi].

MIX DESIGN

The Department will supply a mix design for the foamed asphalt based on test results from pavement and soil analysis taken to the design depth. The Department will provide the following information prior to construction:

1. Percent of bitumen to be used.
2. Percent of water to be used in the foaming process.
3. Quantity (if any) of crusher dust to be used.
4. Quantity of lime or cement to be added.
5. Optimum moisture content for proper compaction and dispersion of foamed asphalt.
6. Additional aggregate (if required).

After a test strip has been completed or as the work progresses, it may be necessary for the Resident to make necessary adjustments to the mix design. Changes to compensation will be in accordance with the Mix Design Special Provision.

CONSTRUCTION REQUIREMENTS

309.04 Weather Limitations When foamed asphalt is used, full depth recycled work shall be performed when;

A. Foaming operations will be allowed between May 15th and September 15th inclusive in Zone 1 - Areas north of US Route 2 from Gilead to Bangor and north of Route 9 from Bangor to Calais. Foaming operations will be allowed between May 1st and September 30th inclusive in Zone 2 - Areas south of Zone 1 including the US Route 2 and Route 9 boundaries.
B. The atmospheric temperature, as determined by an approved thermometer placed in the shade at the recycling location, is 10°C [50^0F] and rising.
C. When there is no standing water on the surface.
D. During generally dry conditions, or when weather conditions are such that proper pulverizing, adding, mixing, and curing can be obtained using proper procedures, and when compaction can be accomplished as determined by the Resident.
E. When the surface is not frozen and when overnight temperatures are expected to be above 0°C [32^0F].
F. Wind conditions as such that the spreading of lime or cement on the roadway ahead of the recycling machine will not adversely affect the operation.

309.05 Full Depth Recycling Procedure If required by the mix design, a uniform layer of crusher dust shall be spread over the full width of the roadway. New aggregate or recycled pavement meeting the requirements of Section 309.021 - New Aggregate, and Recycled Material shall be added as necessary to restore cross-slope and/or grade. Locations will be shown on the plans or described in the construction notes; the Resident may add other locations while construction of the project is in progress. The Contractor will use recycled pavement to the extent it is available, in lieu of new aggregate. The material shall then be pulverized, processed, and blended into a homogeneous mass passing a 50 mm [2 in] square mesh sieve. Material found not pulverized down to a 50mm [2 in] size will be required to be reprocessed by the recycler with successive passes until approved by the Resident. The material shall then be shaped to the cross-slope and grade shown on the plans, typicals, or as directed by the Resident. This pulverized material shall be fine-graded to ±13 mm [±½ in] tolerance. The initial reclaiming process density requirements will be the same as Section 309.07 unless otherwise directed by the Resident.

The dry stabilizing agents (lime or cement) shall be spread uniformly over the full width of roadway to be recycled prior to each pass of the foaming operation, in a continuous process by means of a mechanical spreader. Dry stabilizing agents shall be spread at the prescribed rate of application provided by the Department. Foamed asphalt shall be incorporated into the material to a depth determined by the pavement design. These additives shall then be uniformly blended into a homogeneous mass until an apparent uniform distribution has occurred. The Resident may adjust the rate of application as necessary.

Asphalt binder shall be added to the milling or recycling process by pumping from a mobile bulk tanker that is pushed from behind by the recycling machine. Tankers shall be equipped with a built-in thermometer to ensure that the bituminous stabilizing agent is maintained at 190°C ± 5°C [375°F ± 10°F]. The system employed to add the foamed asphalt to the recycling process shall conform to the equipment requirements specified in these Special Provisions.

Sufficient water shall be added during the recycling process to meet the moisture requirements as specified. Water shall be added only by means of the microprocessor control system on the recycling machine and care shall be taken to prevent excessive wetting.

The resultant material shall be graded and compacted to the cross-slope and profile shown on the plans or as directed by the Resident. The Contractor will also be responsible for re-establishing the existing profile grade. The completed surface of the full depth recycled course shall be shaped and maintained to a tolerance, above or below the required cross sectional shape, of 10 mm [? in]. Areas not meeting this tolerance will be repaired as described in Section 309.051.

After compaction, the roadway surface shall be treated with a light application of water, and rolled with pneumatic-tired rollers to create a close-knit texture. The finished layer shall be free from:

A. Surface laminations.
B. Segregation of fine and coarse aggregate.
C. Corrugations, centerline differential, potholes, or any other defects that may adversely affect the performance of the layer.

The Contractor shall protect and maintain the recycled layer until a lift of pavement is applied. Frequent light watering shall be performed to prevent the surface from drying out. Any damage or defects in the layer shall be repaired immediately. An even and uniform surface shall be maintained. The recycled material shall be swept prior to hot mix asphalt placement.

309.051 Repairs Repairs and maintenance of the recycled layers, during and after the curing period, resulting from damage caused by traffic, weather or environmental conditions, or resulting from damage caused by the Contractor's operations or equipment, shall be completed at no additional cost to the Department.

Low areas will be repaired using a hot mix asphalt shim. Areas up to 25mm [1 in] high can be repaired by milling or shimming with hot mix asphalt. Areas greater than 25mm [1 in] high will be repaired using a hot mix asphalt shim. All repair work will be done with the Resident's approval at the Contractor's expense.

TESTING REQUIREMENTS

309.06 Quality Control The Contractor shall operate in accordance with the approved Quality Control Plan (QCP) to assure a product meeting the contract requirements. The QCP shall meet the requirements of Section 106.4 - Quality Control and this Section. The Contractor shall not begin recycling operations until the Department approves the QCP in writing.

Prior to performing any recycling process, the Department and the Contractor shall hold a Pre-recycle conference to discuss the recycling schedule, type and amount of equipment to be used, sequence of operations, and traffic control. A copy of the QC random numbers to be used on the project shall be provided to the Resident. All field and plant supervisors including the responsible onsite recycling process supervisor shall attend this meeting.

The QCP shall address any items that affect the quality of the Recycling Process including, but not limited to, the following:

A. JMF(s) including sources for all materials.
B. Make and type of rollers including weight, weight per inch of steel wheels, and average contact pressure for pneumatic tired rollers.
C. Testing Plan.
D. Recycling operations including recycling speed, yield monitoring, procedures for avoiding recycling and curing in inclement weather, methods to ensure that segregation is minimized, procedures for mix design modification, grading and compacting operations, and cement and lime application procedure.
E. Methods for protecting the finished product from damage and procedures for any necessary corrective action.
F. Method of grade checks.
G. Examples of Quality Control forms.
H. Name, responsibilities, and qualifications of the Responsible onsite Recycling Supervisor experienced and knowledgeable with the process.
I. A note that all testing will be done in accordance with AASHTO and MDOT/ACM procedures.

The Project Superintendent shall be named in the QCP, and the responsibilities for successful implementation of the QCP shall be outlined.

The Contractor shall sample, test, and evaluate the full depth reclamation process in accordance with the following minimum frequencies:

MINIMUM QUALITY CONTROL FREQUENCIES

Test or Action	Frequency	Test Method
Density	1 per 300 m [1000 ft] / lane	AASHTO T 310
Air Temperature	4 per day at even intervals	
Surface Temperature	At the beginning and end of each days operation	
Yield of all materials (The daily yield, yield since last test, and total project yield.)	1 per 300 m [1000 ft] / lane	

The Department has the right to view any QC test and to request a QC test at any time.

The Contractor shall submit all QC test reports and summaries in writing, signed by the appropriate technician, and present them to the Department's onsite representative by 1:00 P.M. on the next working day, except when otherwise noted in the QCP due to local restrictions. The Contractor shall make all test results, including randomly sampled densities, available to the Department onsite.

The Contractor shall cease recycling operations whenever one of the following occurs:

A. The computed yield differs from the approved Job Mix Formula by 10% or more.
B. The Contractor fails to follow the approved QCP.
C. The Contractor fails to achieve 98% density after corrective action has been taken.

Recycling operations shall not resume until the Department agree on the corrective action to be taken.

309.07 Test Strip The contractor shall assemble all items of equipment for the recycling operation on the first day of the foamed asphalt work. The Contractor shall construct a test strip for the project at a location approved by the Resident. The Responsible onsite Recycling Supervisor will work with Department personnel to determine the suitability of the mixed material, bitumen dispersion within the mixed material, moisture control within the mixed material, and compaction and surface finish. The test strip section is required to:

A. Demonstrate that the equipment and processes can produce recycled layers to meet the requirements specified in these special provisions.
B. Determine the effect on the gradation of the recycled material by varying the forward speed of the recycling machine and the rotation rate of the milling drum.
C. Determine the sequence and manner of rolling necessary to obtain the compaction requirements and establish a target TMD. The Contractor and the Department will calibrate their respective gauges at this time.

The test strip shall be at least 100 m [300 ft] in length of a full lane-width (or a half-road width).

Full recycling production will not start until a passing test strip has been accomplished. If a test strip fails to meet the requirements of this specification, the Contractor will be required to repair or replace the test strip to the satisfaction of the Resident. Any repairs, replacement, or duplication of the test strip will be at the Contractor's expense.

Quality Assurance density testing of the recycled material will be performed by the Department using the nuclear method. After the test strip has been pulverized, the foamed asphalt added and mixed, and the roadway brought to proper shape, it will be rolled as directed until the nuclear density readings show an increase in dry density of less than 16 kg/m³ [1 pcf] for the final four roller passes. This density will be used as the target TMD for the recycled material. The remaining full depth recycled material shall be compacted to a minimum density of 98% of the target density as determined in the control section.

ACCEPTANCE TEST FREQUENCY

Property	Frequency	Test Method
In-place Density	1 per 600 m [2000 ft] / lane	AASHTO T 310

309.08 Miscellaneous No new pavement shall be placed on the full depth recycled pavement until a curing period of 48 hours has elapsed. If inclement weather occurs, the Department reserves the right to extend the curing period.

309.09 Method of Measurement Full Depth recycled material (with Foamed Asphalt) will be measured by the square meter [yd^2]. New aggregate, as defined under section 309.021, added to restore grade and/or cross-slope shall be measured for payment.

309.10 Basis of Payment The accepted quantity of Full Depth Recycled Pavement with Foamed Asphalt shall be paid for at the contract unit price per square meter [yd^2], complete in-place to the specified limits, which price shall be full compensation for furnishing all equipment and labor for pulverizing, blending, placing, grading, compacting and for all incidentals necessary to complete the work including asphalt binder, water, Portland Cement, lime, and crusher dust.

Payments will be made under:

Pay Item	Pay Unit
309.35 Full Depth Recycled Pavement with Foamed Asphalt 125mm [5 in] depth	Square Meter [yd^2]
309.36 Full Depth Recycled Pavement with Foamed Asphalt 150mm [6 in] depth	Square Meter [yd^2]

SPECIAL PROVISION
SECTION 309
FULL DEPTH RECYCLED ASPHALT PAVEMENT
(with foamed asphalt)

Mix Design

The Full Depth Recycled Pavement on this project will be treated with the following material proportions:

PG 64-28 asphalt binder	3.75 %
Water needed to ensure proper foaming	3 %
Portland cement (Type I or II)	1.50 %
Crusher Dust	2.00 %

The optimum moisture content for compaction shall be determined by the Department using samples obtained from the pulverized material prior to addition of the foamed asphalt, by means of AASHTO T 180, Method D.

A contract modification will be executed if percentages change from the requirements above for added asphalt, Portland cement or lime changes by more than 0.10%. Positive and negative price adjustments will be made. The price adjustment will be based upon receipted bills for materials delivered the project site. If a price adjustment is warranted, the contractor will supply the Department with all receipted bills for PG asphalt binder, Portland cement or lime for the entire project. Adjustments in water content exceeding the initial targets shall not be paid for directly, but shall be incidental.

December 22, 2003
Supersedes December 12, 2002

SPECIAL PROVISION
SECTION 401
HOT MIX ASPHALT
(¾ inch (20mm) Surface Treatment)

Description The Contractor shall furnish and place one or more courses of Hot Mix Asphalt (HMA) pavement on an approved base in accordance with the Contract documents and in reasonably close conformity with the lines, grades, thicknesses and typical cross sections shown on the plans or established. The Department shall accept this work under Quality Assurance provisions as specified in Standard Specifications Section 401 – Hot Mix Asphalt Pavement, and Standard Specifications Section 106 - Quality.

The 20 mm [¾ in] HMA Surface Course shall meet all of the Materials, Seasonal Limitations and Construction requirements of Section 401, with the following additions and changes.

GRADATION REQUIREMENTS

Sieve Size	Percent Passing
12.5 mm	100
9.5 mm	95-100
4.75 mm	-95
2.36 mm	32-67
1.18 mm	-
0.600 mm	-
0.300 mm	-
0.075 mm	2-10

VOLUMETRIC DESIGN CRITERIA

Voids at N_{des}	4.0
VMA	15.0 minimum
VFB	65-80
Fines/Eff.Binder	0.6-1.2

A test strip at a nominal depth of 30mm [1¼ in], full lane width, shall be required if the JMF has *not been* used or approved on a MDOT project in the current calendar year. If a test strip is required, it shall conform to the following requirements:

On roads open to two way traffic, the test strip shall be placed over the full width of the travel way section, not to exceed 600 meters [2000 ft] in length, or 400 Mg [440 ton] production. Prior to the placement of the test strip a passing verification test is required. A fog coat of Item 409.15, Bituminous Tack Coat, shall be applied to the level course prior to the placement of the 20mm Surface Treatment Course, payment to be made under the 409.15 pay item.
The test strip **shall not** be excluded from QA analysis, but will be evaluated in accordance with Section 401.03. The Contractor shall notify the Department at least 48 hours in advance of placing

the test strip. The test strip is intended to allow the Contractor to establish a method of compaction for the 20mm [¾ in] surface course areas. Once the methods are established, rolling patterns, equipment, and methods will become part of the QCP. The test strip will allow for any necessary adjustments to the mix design and or plant mixing procedures, as well as for the Department to evaluate the quality of the pavement.

Mix samples and cores will be obtained from the test strip. A minimum of three mix samples shall be randomly selected from the test strip. Five cores shall be randomly sampled from the mat and tested for density verification. Should the resulting core values average less than 92.0% TMD, (average of 5 tests), the Department will reject the strip. The Contractor will remove and replace rejected test strips at their expense. After completion of the test strip, the Contractor shall make any final adjustments to the job mix formula in accordance to Standard Specifications, Section 401, subsection 401.03 - Composition of Mixtures, or compaction method. Paving operations shall not resume until the Contractor and the Department determines that material meeting the Contract requirements can be produced, and any changes to the Job Mix Formula have been approved by the Department. The Department shall pay for an accepted test strip as determined Section 401.222 – Pay Factor A and B, for this item. A new test strip shall be required if a current lot is terminated or completed, and a new lot is started.

The Department may halt the production and placement of the 20mm [¾ in] HMA Surface Course and require the construction of a new test strip if the Department finds that material being produced, hauled, or placed does not meet the requirements of Sections 401.08 through 401.18.

The Contractor shall sample, test, and evaluate Hot Mix Asphalt Pavement in accordance with the minimum frequencies outlined in Section 401, Table 2: Minimum Quality Control Frequencies.

The Contractor shall monitor plant production using running average of three control charts as specified in Section 106, and Control Limits as specified in Section 401, Table 3: Control Limits.

The Acceptance Criteria shall be as specified in Section 401, Table 4: Acceptance Criteria.

The Acceptance Limit targets will be as specified on the JMF, and the Department will use the appropriate Acceptance Limits table from Section, Table 5: Method A, or Table 7: Method B and C, for the acceptance method noted in the Special Provision 403.

The Contractor shall cease paving operations whenever one of the following occurs on a lot in progress:

a) The Pay Factor for VMA, Voids @ N_d, Percent PGAB, composite gradation, VFB, fines to effective binder or density using all Acceptance or all Quality Control tests for the current lot is less than 0.85.
b) The Coarse Aggregate Angularity or Fine Aggregate Angularity value falls below the requirements of Section 703.07 , Table 3, for the design traffic level.
c) Each of the first 2 control tests for the lot fall outside the upper or lower limits for VMA, Voids @ Nd, or Percent PGAB. This includes any case where both tests are out on the same, or different properties.

d) The Flat and Elongated Particles value exceeds 10 percent by ASTM D-4791.
e) There is any visible damage to the aggregate due to over-densification other than on variable depth shim courses.
f) The Contractor fails to follow the approved QCP.
g) The Contractors control chart shows the process to be out of control on any property listed in Section 401, subsection 401.18 , Table 3: Control Limits

Price Adjustment The Department will apply price adjustments for the Hot Mix Asphalt utilized under this Special Provision as outlined in Section 401.222 : Pay Factor for methods A and B; mixes with Volumetric Property requirements.

Dispute Resolution The Contractor may dispute an acceptance test for this item as outlined in Section 401.223 for PGAB, Air Void, and VMA Content only.

Method of Measurement The Department will measure Hot Mix Asphalt pavement by the megagram in accordance with Section 109 - Measurement and Payment.

Basis of Payment The Department will pay for the Work, in place and accepted, in accordance with the applicable sections of the Special Provisions at the contract unit price per megagram(ton).

Payment will be made under:

Pay Item	Pay Unit
403.210 9.5mm Hot Mix Asphalt Pavement	Megagram (ton)

SPECIAL PROVISION
SECTION 403
HOT MIX ASPHALT OVERLAY

Desc. of Course	Grad. Design	Item Number	Bit Cont. % of Mix	Total Thick	No. Of Layers	Comp. Notes
			Foamed Asphalt Treated Areas			
			Mainline Traveled Way and Shoulders			
Wearing	9.5mm	403.210	N/A	1¼”	1	4,7
Base	9.5mm	403.210	N/A	1¼”	1	4,7
			Main Line Traveled Way and Paved Shoulders			
			¾ inch Overlay			
Wearing	9.5mm	403.210	N/A	¾”	1	4,7,10,22
Shim	9.5mm	403.211	N/A	variable	1/more	2,4,7,10
			Main Line Traveled Way and Paved Shoulders			
			1¼ inch Overlay			
Wearing	9.5mm	403.210	N/A	1¼”	1	4,7
Shim	9.5mm	403.211	N/A	variable	1/more	2,4,7,10
			Shoulder Rehab. Areas			
Wearing	9.5mm	403.210	N/A	2”	1	4,7
			Approach Roads			
Wearing	9.5mm	403.210	N/A	3”	1	4,7
			Drives, Misc.			
Wearing	9.5mm	403.209	N/A	50mm	1/more	2,3,9,13

COMPLEMENTARY NOTES

2. The density requirements are waived.
3. The design traffic level for mix placed shall be <0.3 million ESALS.
4. The design traffic level for mix placed shall be 0.3 to <3 million ESALS.
7. Section 106.6 Acceptance, (1) Method A.
9. Section 106.6 Acceptance, (2) Method C.
10. A **“FINE”** 9.5 mm mix with a gradation above or through the restricted zone shall be used for this item.
13. A mixture meeting the requirements of section 703.09 Grading ‘D’, with a minimum PGAB content of 6%, and the limits of Special Provision 401, Table 9 (Drives and Sidewalks) for PGAB content and gradation may be substituted for this item. A job mix formula shall be submitted to the department for approval.
22. See Special Provision 401 – ¾ inch (20mm) Surface Treatment for project specifics.

Tack Coat

A tack coat of emulsified asphalt, RS-1 or HFMS-1, Item #409.15 shall be applied to any existing pavement at a rate of approximately 0.08 L/m², and on milled pavement approximately 0.2 L/m², prior to placing a new course. **A fog coat of emulsified asphalt shall be applied between shim / intermediate course and the surface course, at a rate not to exceed 0.08 L/m².**

Tack used between new layers of pavement will be paid for at the contract unit price for Item 409.15 Bituminous Tack Coat.

SPECIAL PROVISION
SECTION 403
HOT MIX ASPHALT OVERLAY

Desc. of Course	Grad. Design	Item Number	Bit Cont. % of Mix	Total Thick	No. of Layers	Comp. Notes
			Main Line Traveled Way and Paved Shoulders			
			¾ inch Overlay			
Wearing	9.5mm	403.210	N/A	¾"	1	4,7,10,22
			Shim Course			
Shim	9.5mm	403.211	N/A	variable	1/more	2,4,7,10
			Drives, Misc.			
Wearing	9.5mm	403.209	N/A	1 – 2 inch	1/more	2,3,9,10,13

COMPLEMENTARY NOTES

2. The density requirements are waived.
3. The design traffic level for mix placed shall be <0.3 million ESALS.
4. The design traffic level for mix placed shall be 0.3 to <3 million ESALS.
7. Section 106.6 Acceptance, (1) Method A.
9. Section 106.6 Acceptance, (2) Method C.
10. A **"FINE"** 9.5 mm mix with a gradation above or through the restricted zone shall be used for this item.
13. A mixture meeting the requirements of section 703.09 Grading 'D', with a minimum PGAB content of 6%, and the limits of Special Provision 401, Table 9 (Drives and Sidewalks) for PGAB content and gradation may be substituted for this item. A job mix formula shall be submitted to the department for approval.
22. See Special Provision 401 – ¾ inch (20mm) Surface Treatment for project specifics.

Tack Coat

A tack coat of emulsified asphalt, RS-1 or HFMS-1, Item 409.15 shall be applied to any existing pavement at a rate of approximately 0.025 gal/yd², and on milled pavement approximately 0.05 gal/yd², prior to placing a new course. A fog coat of emulsified asphalt shall be applied between shim / intermediate course and the surface course, at a rate not to exceed 0.025 gal/yd².

Tack used between layers of pavement will be paid for at the contract unit price for Item 409.15 Bituminous Tack Coat.

SPECIAL PROVISION
SECTION 403
HOT MIX ASPHALT OVERLAY

Desc. of Course	Grad. Design	Item Number	Bit Cont. % of Mix	Total Thick	No. Of Layers	Comp. Notes
			Mill and Overlay Areas			
			Mainline Traveled Way and Shoulders			
Wearing	9.5mm	403.210	N/A	1 ½ ”	1	4,7
			Drives, Misc.			
Wearing	9.5mm	403.209	N/A	1 ¼” to 2”	1/more	2,3,9,10,13

COMPLEMENTARY NOTES

2. The density requirements are waived.
3. The design traffic level for mix placed shall be <0.3 million ESALS.
4. The design traffic level for mix placed shall be 0.3 to <3 million ESALS.
7. Section 106.6 Acceptance, (1) Method A.
9. Section 106.6 Acceptance, (2) Method C.
10. A **“FINE”** 9.5 mm mix with a gradation above or through the restricted zone shall be used for this item.
13. A mixture meeting the requirements of section 703.09 Grading ‘D’, with a minimum PGAB content of 6%, and the limits of Special Provision 401, Table 9 (Drives and Sidewalks) for PGAB content and gradation may be substituted for this item. A job mix formula shall be submitted to the department for approval.

Tack Coat

A tack coat of emulsified asphalt, RS-1 or HFMS-1, Item 409.15 shall be applied to any existing pavement at a rate of approximately 0.025 gal/yd², and on milled pavement approximately 0.05 gal/yd², prior to placing a new course. A fog coat of emulsified asphalt shall be applied between shim / intermediate course and the surface course, at a rate not to exceed 0.025 gal/yd².

Tack used between layers of pavement will be paid for at the contract unit price for Item 409.15 Bituminous Tack Coat.

SPECIAL PROVISION
SECTION 652
MAINTENANCE OF TRAFFIC
(Traffic Control)

652.7 Method of Measurement. This entire Subsection is revised to read:
Traffic Control Supervisor, furnishing, installation, and maintenance of all traffic control devices will be measured as one **lump sum** for all work authorized and performed.

652.8 Basis of Payment. This entire Subsection is revised to read:
Traffic Control will be paid for at the contract **lump sum** price. Payment will be full compensation for the Traffic Control Supervisor, approach signs, work area signs, drums, cones, panel markers, barricades, arrow boards etc. and maintenance thereof including the setting up and taking down of lane closures as many times as necessary shall be considered part of the lump sum price.

Maintenance of signs includes: replacing devices damaged, lost, or stolen, and cleaning and moving as many times as necessary throughout the life of the contract, regardless whether the work areas or projects are geographically separated or not separated.

The Lump Sum will be payable in installments as follows: 5% of the Lump Sum once the approach signing is complete and approved, with the 95% balance to be paid as the work progresses at a rate proportional to the percentage completion of the Contract.

Failure by the contractor to follow the Contracts 652 Special Provisions and/or The Manual on Uniform Traffic Control Devices (MUTCD) and/or The Contractors own Traffic Control Plan will result in a reduction in payment, computed by reducing The Lump Sum Total by 5% per occurrence. The Departments Resident Engineer or any other representative of The Department reserves the right to suspend the work at any time and request a meeting to discuss violations and remedies. The Department shall not be held responsible for any delay in the work due to any suspension under this item.

All other requirements under the Standard Specifications Section 652 will be a part of the lump sum item.

There will be no extra payment for this pay item after the expiration of contract time.

Payment will be made under:

Pay Item	Pay Unit
652.39 Work Zone Traffic Control	Lump Sum

February 27, 2003
Supersedes December 10, 2002

SPECIAL PROVISION
SECTION 652
MAINTENANCE OF TRAFFIC

Approaches Approach signing shall include the following signs as a minimum. Field conditions may warrant the use of additional signs as determined by the Resident.

Road Work Next x Miles
Road Work 500 Feet
End Road Work

Work Area At each work site, signs and channelizing devices shall be used as directed by the Resident. Signs include:

Road Work xxxx[1]
One Lane Road Ahead
Flagger Sign

Other typical signs include:

Be Prepared to Stop
Low Shoulder
Bump
Pavement Ends

The above lists of Approach signs and Work Area signs are representative of the contract requirements. Other sign legends may be required.

The Contractor shall conduct their operations in such a manner that the roadway will not be restricted to one lane for more than 800 m [2,500 ft] at each work area. Where more than one work area restricts traffic to one lane operation, these work areas shall be separated by at least 1.6 km [1 mile] of two way operation.

Temporary Centerline A temporary centerline shall be placed each day on all new pavement to be used by traffic. The temporary centerline, when specified of reflectorized traffic paint, shall conform to the standard marking patterns used for permanent markings.

Failure to apply a temporary centerline daily will result in suspension of paving until temporary markers are applied to all previously placed pavement.

[1] "Road Work Ahead" to be used in mobile operations and "Road Work xx ft" to be used in stationary operations as directed by the Resident.

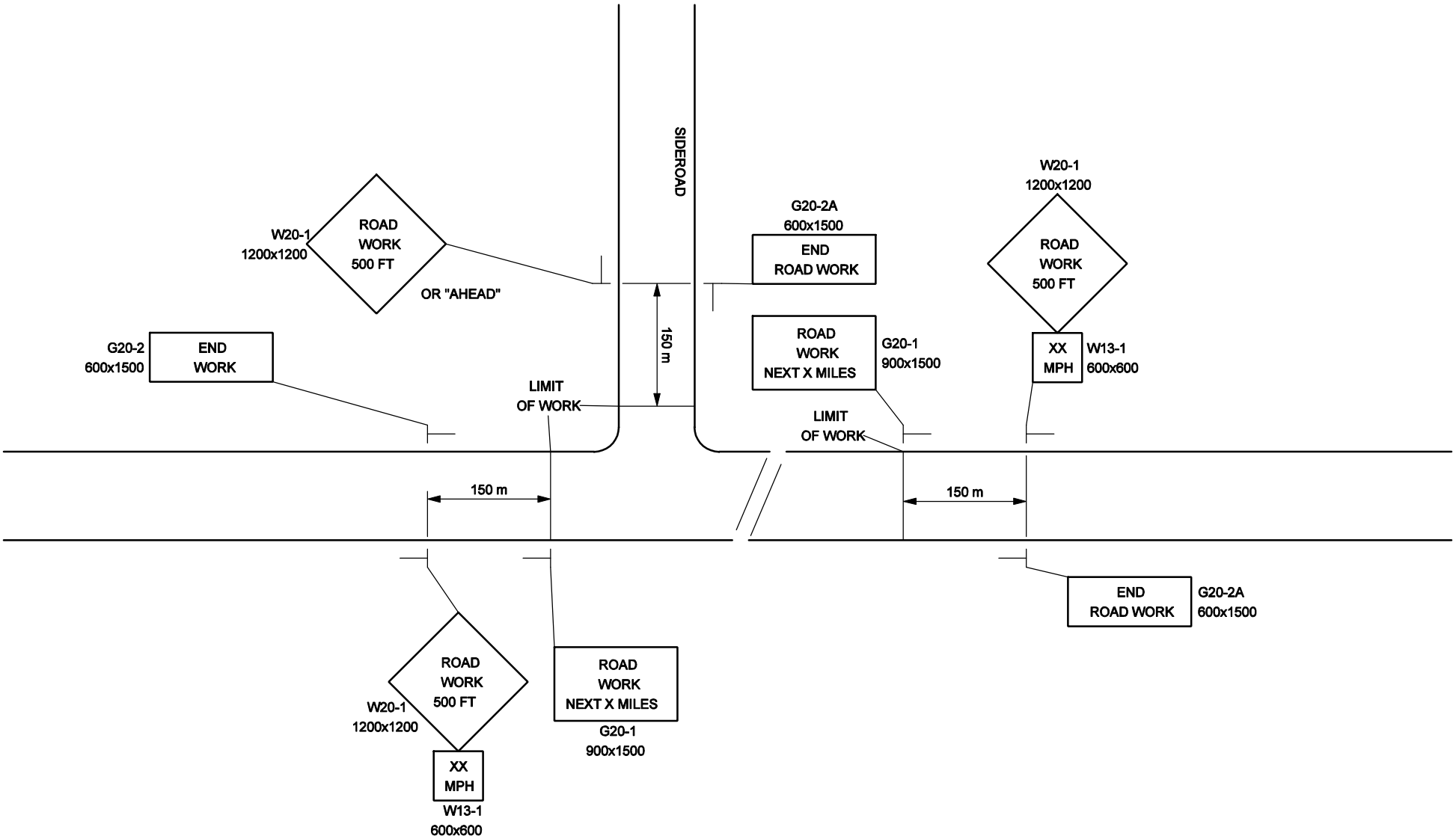

TYPICAL
-- PROJECT APPROACH SIGNING --
TWO WAY TRAFFIC

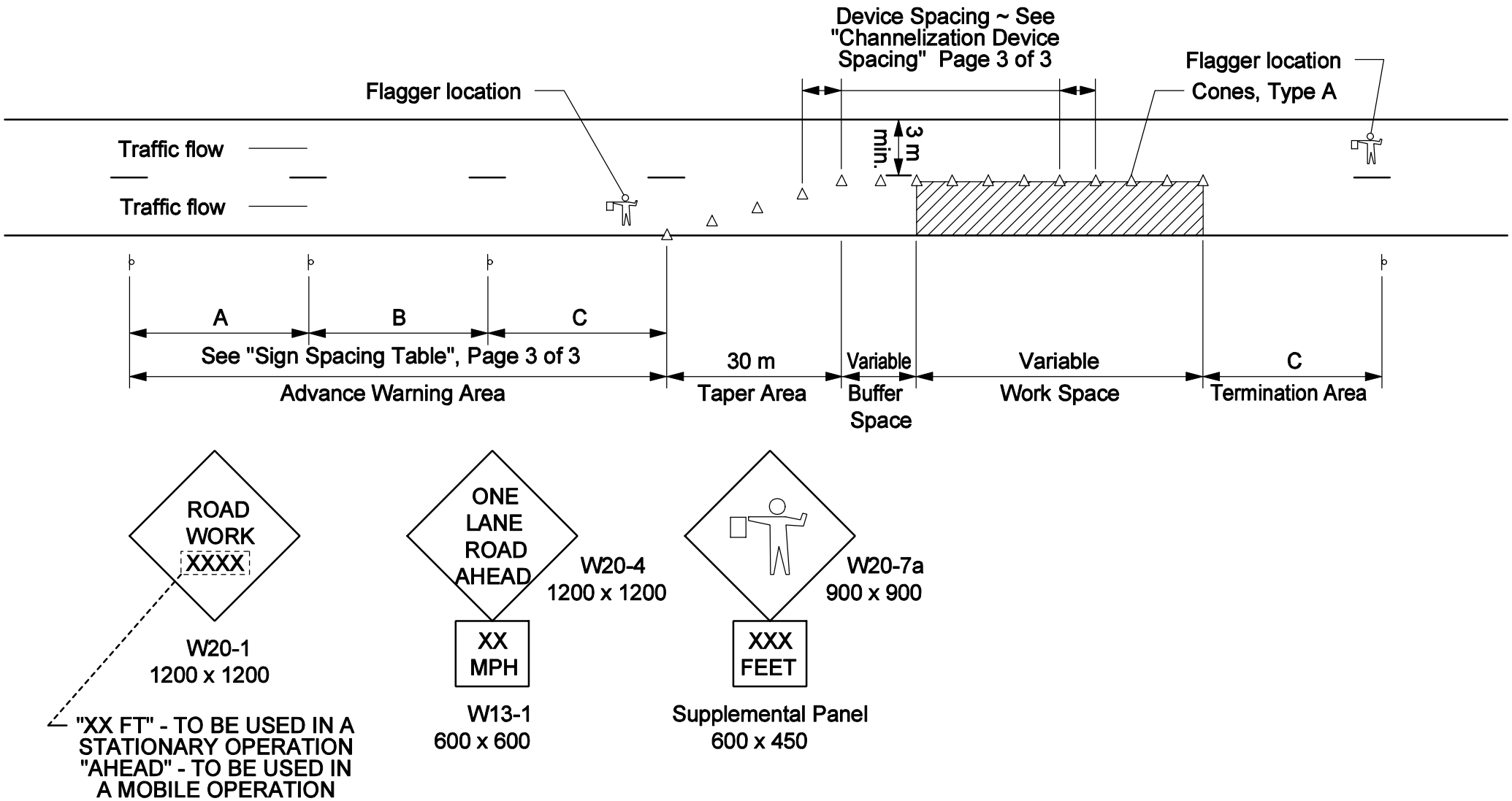

TYPICAL APPLICATION: TWO - WAY, TWO LANE ROADWAY, CLOSING ONE LANE USING FLAGGERS

TYPE OF TAPER	TAPER LENGTH (L)*
Merging Taper	at least L
Shifting Taper	at least 0.5L
Shoulder Taper	at least 0.33L
One-Lane, Two-Way Traffic Taper	100 ft (30 m) maximum
Downstream Taper	100 ft (30 m) per lane

* Formulas for L are as follows:

For speed limits of 40 mph (60 km/h) or less:

$L = \frac{WS^2}{60}$ $\quad (L = \frac{WS^2}{155})$

For speed limits of 45 mph (70 km/h) or greater:

$L = WS$ $\quad (L = \frac{WS}{1.6})$

* Formulas for L are as follows:

A minimum of 5 channelization devices shall be used in the taper.

CHANNELIZATION DEVICE SPACING

The spacing of channelization devices shall not exceed a distance equal to 1.0 times the speed limit in mph when used for taper channelization, and a distance in feet of 2.0 times the speed limit in mph when used for tangent channelization.

SIGN SPACING TABLE			
Road Type	Distance Between Signs**		
	A	B	C
Urban 30 mph (50 km/h) or less	100 (30)	100 (30)	100 (30)
Urban 35 mph (55 km/h) and greater	350 (100)	350 (100)	350 (100)
Rural	500 (150)	500 (150)	500 (150)
Expressway / Urban Parkway	2,640 (800)	1,500 (450)	1000 (300)

**Distances are shown in feet (meters).

GENERAL NOTES;

1. Final placement of signs and devices may be changed to fit field conditions as approved by the Resident.

SUGGESTED BUFFER ZONE LENGTHS

Speed (mph)	Length (feet)	Speed (mph)	Length (feet)
20	115	40	325
25	155	45	360
30	200	50	425
35	250	55	495

SPECIAL PROVISION
SECTION 656
Temporary Soil Erosion and Water Pollution Control

The following is added to Section 656 regarding Project Specific Information and Requirements. All references to the Maine Department of Transportation Best Management Practices for Erosion and Sediment Control (a.k.a. Best Management Practices manual or BMP Manual) are a reference to the latest revision of said manual. The "Table of Contents" of the latest version is dated "1/19/00" (available at http://www.state.me.us/mdot/mainhtml/bmp/bmpjan2000.pdf.) **Procedures specified shall be according to the BMP Manual unless stated otherwise.**

Delete the last sentence of Section 656.4.4, which reads, "After Final Acceptance of the project, the Contractor must submit the log to the Department which will become the property of the Department."

Any and all references to "bark mulch" or "composted bark mix" shall be a reference to " Erosion Control Mix" in accordance with *Standard Specification, Section 619 - Mulch.*

Project Specific Information and Requirements

The following information and requirements apply specifically to this Project. The temporary soil erosion and water pollution control measures associated with this work shall be addressed in the SEWPCP.

1) This project is in the St. John River watershed and is considered **SENSITIVE** in accordance with the BMP Manual. The Contractor's SEWPCP shall comply with Section II.B., Guidelines for Sensitive Water bodies in the BMP Manual.

2) Newly disturbed earth shall be mulched by the end of each workday. Mulch shall be maintained on a daily basis.

3) The SEWPCP shall describe the location and method of temporary erosion and sediment control for existing and proposed catch basins, outlet areas and culvert inlets and outlets.

4) Dust control items other than those under *Standard Specification, Section 637 – Dust Control* , if applicable, shall be included in the plan.

5) Permanent slope stabilization measures shall be applied within one week of the last soil disturbance.

SPECIAL PROVISION
SECTION 656
Temporary Soil Erosion and Water Pollution Control

6) Permanent seeding shall be done in accordance with *Standard Specification, Section 618 - Seeding* unless the Contract states otherwise.

7) Culvert inlet and outlet protection shall be installed within 48 hours of culvert installation, or prior to a storm event, whichever is sooner.

8) All disturbed ditches shall be stabilized by the end of each workday. Stabilization shall be maintained on a daily basis.

9) Erosion control blanket shall be installed in the bottoms of all ditches except where a stone lining is planned. Seed shall be applied prior to the placement of the blanket.

10) If check dams are used, they shall be constructed of stone in accordance with BMP Manual, Section 9.

11) If water is flowing within the drainage system, the water shall be diverted to a stable area or conduit and work shall be conducted in the dry. The Contractor's plan shall address when and where the diversions will be necessary.

12) Demolition debris (including debris from wearing surface removal, saw cut slurry, dust, etc.) shall be contained and shall not be allowed to discharge to any resource. All demolition debris shall be disposed of in accordance with *Standard Specifications, Section 202.03, Removing Existing Superstructure, Structural Concrete, Railings, Curbs, Sidewalks and Bridges*. Containment and disposal of demolition debris shall be addressed in the Contractor's SEWPCP.

13) CLEARING LIMIT LINES SHALL BE MINIMIZED. Clearing shall be minimized as shown on the design plans.

SPECIAL PROVISION
SECTION 656
Temporary Soil Erosion and Water Pollution Control

14) Class A and AA Waters - General in-stream work other than slip/ invert lining for class A and AA waters

Stream flow shall be maintained at all times.

Grout from the post-tensioning socket sealing operation and fresh concrete shall not be allowed to contact the stream. Clean out of concrete delivery trucks and the washing of tools shall be addressed in the SEWPCP.

The SEWPCP shall describe the containment method for removal of the existing abutments, including installation of cofferdams and dewatering procedures.

A cofferdam sedimentation basin is required if cofferdams are used. The basin shall be located in an upland area where the water can settle and seep into the ground or be released slowly to the resource in a manner that will not cause erosion. The location of such a cofferdam sedimentation basin shall be addressed in the SEWPCP.

OR

If a cofferdam sedimentation basin is used, it shall be located in an upland area where the water can settle and sink into the ground or be released slowly to the resource in a manner that will not cause erosion. The location of such a cofferdam sedimentation basin shall be addressed in the SEWPCP.

Prior to release to a natural resource, any impounded water that has been in contact with concrete placed during construction must have a pH between 6.0 and 8.5, must be within one pH unit of the background pH level of the resource and shall have a turbidity no greater than the receiving resource. This requirement is applicable to concrete that is placed or spilled (including leakage from forms) as well as indirect contact via tools or equipment. Water not meeting release criteria shall be addressed in the SEWPCP. Discharging impounded water to the stream must take place in a manner that does not cause erosion or disturb the stream bottom. **The rate of discharge must be less than 20% of the flow rate of the stream.**

The Contractor shall be responsible for monitoring pH with a calibrated meter accurate to 0.1 units. A record of pH measurements shall be kept in the Environmental Coordinator's log (*Section 656.4.4.*)

Permits & Cultural Resources Unit

PIN #: 11257.00
Location: St Francis
Permit Member: Laurie Rowe Photographs ☐ Database/Projex ☒ Package to ENV Coordinator: 3/31/04

☒ **Section 106 and Tribal Consultation**

Architectural Resources	MOA ☐	Applicable☒	Approved ☒
Archeological Resources	MOA ☐	Applicable☒	Approved ☒
Tribal Consultation	N/A ☒	Applicable☐	Approved ☐

☒ **4(f) and 6(f)**

Section 4(f)	N/A ☒	Applicable☐	Approved ☐
LAWCON 6(f)	N/A ☒	Applicable☐	Approved ☐

☒ **FEMA** N/A ☒ Applicable☐ Approved ☐

☒ **Maine Department of Environmental Protection (MDEP) Site Location of Development**
N/A ☒ Applicable ☐ Approved ☐

☒ **Local Zoning, Title 30-A, Section 4325-6**.
Is the project something other than the highway and bridge system, such as a maintenance lot, building/parking facility? Yes ☐ No ☒. If no, the project is exempt.
If yes, continue. Does the town in which the project is located have a comprehensive plan consistent with the Growth Management Program? Yes ☐ No ☐. If no, the project is exempt.
If yes, local zoning ordinances and/or permits are needed. Approved ☐

☒ **Maine Department of Inland Fisheries and Wildlife (MDIFW) Essential Habitat**

Eagle Nest	N/A ☒	Applicable ☐	Approved ☐
Piping Plover	N/A ☒	Applicable ☐	Approved ☐
Roseate Tern	N/A ☒	Applicable☐	Approved ☐

☒ **United States Fish and Wildlife Service (USFWS), Migratory Bird Act**
N/A ☒ Applicable ☐

☒ **Maine Department of Conservation/ Public Lands, Submerged Land Lease**
N/A ☒ Applicable ☐

☒ **Land Use Regulation Commission (LURC)** ☒ Not Applicable

No permit	☐	
Notice	☐	Approved ☐
Permit	☐	Approved ☐

☒ **Maine Department of Environmental Protection (MDEP), Natural Resource Protection Act**

No permit required	☐	
Exempt	☐	(Must use erosion and sediment control and not block fish passage.)
PBR	☒	Approved ☒
Tier 1	☐	Approved ☐
Tier 2	☐	Approved ☐
Tier 3	☐	Approved ☐

☒ **Army Corps of Engineers (ACOE), Section 10 of the Rivers and Harbors Act and Section 404 of the Clean Water Act.**

No permit required ☐	
Category 1-NR☒	Approved ☒
Category 2☐	Approved ☐
Category 3☐	Approved ☐

☒ **IN-WATER TIMING RESTRICTIONS:** 105 Special Provision ☐ n/a ☒
Dates instream work is allowed: There is No instream work on this project

☒ Special Provision 656, Erosion Control Plan
Boxes marked in red indicate items that are attached and need to be placed in the contract by the Project Manager.

DEPARTMENT OF ENVIRONMENTAL PROTECTION (DEP)

PERMIT BY RULE NOTIFICATION FORM

(For use with DEP Regulation, Chapter 305)

■ **MDOT PIN: 11257.00**

Name of Applicant: **State of Maine Department of Transportation** **Name of Contact:** **David Gardner**
Mailing Address: **16 Station State House** **Town/City:** **Augusta** **State:** **Me.** **Zip Code: 04330-0016**
Daytime Telephone #: (207)-624-3105 **Name of Wetland, Water Body or Stream: St John River**

Detailed Directions to Site: Project is on Rte 161 beginning at Cottage Road and extending westerly 1.20 miles.

Town/City: St Francis **Map #:** N/A **Lot #:** N/A **County: Aroostook**

Description of Project: Highway overlay involving culvert, guardrail, slope and ditch maintenance and repairs. The project will be performed in accordance with erosion control measures conforming with the latest versions of the *State of Maine Department of Transportation Standard Specifications for Highways and Bridges* and the *Department of Transportation's Best Management Practices for Erosion and Sediment Control.*

Part of a larger project? ☐**Yes** ☒**No**

(**CHECK ONE**) This project... ☒ does ☐ does not ...involve work below mean low water.

I am filing notice of my intent to carry out work which meets the requirements for Permit By Rule (PBR) under DEP Regulation, Chapter 305. I have a copy of PBR Sections checked below. I have read and will comply with all of the standards.

☐Sec. (2) Soil Disturbance	☐Sec. (8) Shoreline stabilization	☐Sec. (14) Piers, Wharves & Pilings
☐Sec. (3) Intake Pipes	☐Sec. (9) Utility Crossing	☐Sec. (15) Public Boat Ramps
☐Sec. (4) Replacement of Structures	☐Sec. (10) Stream Crossing	☐Sec. (16) Coastal Sand Dune Projects
☐Sec. (5) REPEALED	☒Sec. (11) State Transport. Facilities	☐Sec. (17) Transfers/Permit Extension
☐Sec. (6) Movement of Rocks or Vegetation	☐Sec. (12) Restoration of Natural Areas	☐Sec. (18) Maintenance Dredging
☐Sec. (7) Outfall Pipes	☐Sec. (13) F&W Creation/Enhance/Water Quality Improvement	

I authorize staff of the Departments of Environmental Protection, Inland Fisheries & Wildlife, and Marine Resources to access the project site for the purpose of determining compliance with the rules. I also understand that ***this permit is not valid until approved by the Department or 14 days after receipt by the Department, whichever is less.***

I have attached all of the following required submittals. **NOTIFICATION FORMS CANNOT BE ACCEPTED WITHOUT THE NECESSARY ATTACHMENTS:**

- ■ **A $50 (non-refundable) payment shall be done by internal billing.**
- ■ ***Attach*** **a U.S.G.S. topo map or Maine Atlas & Gazetteer map with the project site clearly marked.**
- ❑ ***Attach*** **photographs showing existing site conditions (unless not required under standards).**

Signature of Applicant: _____ **Date:** 10/17/03
John E. Dority, Chief Engineer

Keep the bottom copy as a record of permit. Send the form with attachments via certified mail to the Maine Dept. of Environmental Protection **at the appropriate regional office listed below**. The DEP will send a copy to the Town Office as evidence of the DEP's receipt of notification. No further authorization by DEP will be issued after receipt of notice. Permits are valid for two years. **Work carried out in violation of any standard is subject to enforcement action.**

AUGUSTA DEP STATE HOUSE STATION 17 AUGUSTA, ME 04333-0017 (207)287-2111 PORTLAND DEP 312 CANCO ROAD PORTLAND, ME 04103 (207)822-6300 BANGOR DEP 106 HOGAN ROAD BANGOR, ME 04401 (207)941-4570 PRESQUE ISLE DEP 1235 CENTRAL DRIVE PRESQUE ISLE, ME 04769 (207)764-0477

OFFICE USE ONLY	Ck.#	Staff	Staff	
PBR # FP	Date	Acc. Date	Def. Date	After Photos

Permits & Cultural Resources Unit

PIN #: 11259.00
Location: St John
Permit Member: Laurie Rowe Photographs ☐ Database/Projex ☒ Package to ENV Coordinator:4/5/04

☒ **Section 106 and Tribal Consultation**

Architectural Resources	MOA ☒	Applicable☐	Approved ☐
Archeological Resources	MOA ☒	Applicable☐	Approved ☐
Tribal Consultation	N/A ☒	Applicable☐	Approved ☐

☒ **4(f) and 6(f)**

Section 4(f)	N/A ☒	Applicable☐	Approved ☐
LAWCON 6(f)	N/A ☒	Applicable☐	Approved ☐

☒ **FEMA** N/A ☒ Applicable☐ Approved ☐

☒ **Maine Department of Environmental Protection (MDEP) Site Location of Development**
N/A ☒ Applicable ☐ Approved ☐

☒ **Local Zoning, Title 30-A, Section 4325-6**.
Is the project something other than the highway and bridge system, such as a maintenance lot, building/parking facility? Yes ☐ No ☒. If no, the project is exempt.
If yes, continue. Does the town in which the project is located have a comprehensive plan consistent with the Growth Management Program? Yes ☐ No ☐. If no, the project is exempt.
If yes, local zoning ordinances and/or permits are needed. Approved ☐

☒ **Maine Department of Inland Fisheries and Wildlife (MDIFW) Essential Habitat**

Eagle Nest	N/A ☒	Applicable ☐	Approved ☐
Piping Plover	N/A ☒	Applicable ☐	Approved ☐
Roseate Tern	N/A ☒	Applicable☐	Approved ☐

☒ **United States Fish and Wildlife Service (USFWS), Migratory Bird Act**
N/A ☒ Applicable ☐

☒ **Maine Department of Conservation/ Public Lands, Submerged Land Lease**
N/A ☒ Applicable ☐

☒ **Land Use Regulation Commission (LURC)** ☐ Not Applicable

No permit	☒	
Notice	☐	Approved ☐
Permit	☐	Approved ☐

☒ **Maine Department of Environmental Protection (MDEP), Natural Resource Protection Act**

No permit required	☒	
Exempt	☐	(Must use erosion and sediment control and not block fish passage.)
PBR	☐	Approved ☐
Tier 1	☐	Approved ☐
Tier 2	☐	Approved ☐
Tier 3	☐	Approved ☐

☒ **Army Corps of Engineers (ACOE), Section 10 of the Rivers and Harbors Act and Section 404 of the Clean Water Act.**

No permit required ☐	
Category 1-NR☒	Approved ☒
Category 2☐	Approved ☐
Category 3☐	Approved ☐

☒ **IN-WATER TIMING RESTRICTIONS:** 105 Special Provision ☐ n/a ☒
Dates instream work is allowed: There is No instream work on this project

☒ Special Provision 656, Erosion Control Plan
Boxes marked in red indicate items that are attached and need to be placed in the contract by the Project Manager.

Permits & Cultural Resources Unit

PIN #: 11325.00
Location: Fort Kent
Permit Member: Laurie Rowe Photographs ☐ Database/Projex ☒ Package to ENV Coordinator: 3/18/04

☒ **Section 106 and Tribal Consultation**

Architectural Resources	MOA ☐	Applicable☒	Approved ☒
Archeological Resources	MOA ☐	Applicable☒	Approved ☒
Tribal Consultation	N/A ☒	Applicable☐	Approved ☐

☒ **4(f) and 6(f)**

Section 4(f)	N/A ☒	Applicable☐	Approved ☐
LAWCON 6(f)	N/A ☒	Applicable☐	Approved ☐

☒ **FEMA** N/A ☒ Applicable☐ Approved ☐

☒ **Maine Department of Environmental Protection (MDEP) Site Location of Development**
N/A ☒ Applicable ☐ Approved ☐

☒ **Local Zoning, Title 30-A, Section 4325-6**.
Is the project something other than the highway and bridge system, such as a maintenance lot, building/parking facility? Yes ☐ No ☒. If no, the project is exempt.
If yes, continue. Does the town in which the project is located have a comprehensive plan consistent with the Growth Management Program? Yes ☐ No ☐. If no, the project is exempt.
If yes, local zoning ordinances and/or permits are needed. Approved ☐

☒ **Maine Department of Inland Fisheries and Wildlife (MDIFW) Essential Habitat**

Eagle Nest	N/A ☒	Applicable ☐	Approved ☐
Piping Plover	N/A ☒	Applicable ☐	Approved ☐
Roseate Tern	N/A ☒	Applicable☐	Approved ☐

☒ **United States Fish and Wildlife Service (USFWS), Migratory Bird Act**
N/A ☒ Applicable ☐

☒ **Maine Department of Conservation/ Public Lands, Submerged Land Lease**
N/A ☒ Applicable ☐

☒ **Land Use Regulation Commission (LURC)** ☒ Not Applicable

No permit	☐	
Notice	☐	Approved ☐
Permit	☐	Approved ☐

☒ **Maine Department of Environmental Protection (MDEP), Natural Resource Protection Act**

No permit required	☐	
Exempt	☐	(Must use erosion and sediment control and not block fish passage.)
PBR	☒	Approved ☒
Tier 1	☐	Approved ☐
Tier 2	☐	Approved ☐
Tier 3	☐	Approved ☐

☒ **Army Corps of Engineers (ACOE), Section 10 of the Rivers and Harbors Act and Section 404 of the Clean Water Act.**

No permit required ☐	
Category 1-NR☒	Approved ☒
Category 2☐	Approved ☐
Category 3☐	Approved ☐

☒ **IN-WATER TIMING RESTRICTIONS:** 105 Special Provision ☐ n/a ☒
Dates instream work is allowed: There is No instream work on this project

☒ Special Provision 656, Erosion Control Plan
Boxes marked in red indicate items that are attached and need to be placed in the contract by the Project Manager.

DEPARTMENT OF ENVIRONMENTAL PROTECTION (DEP)

PERMIT BY RULE NOTIFICATION FORM

(For use with DEP Regulation, Chapter 305)

■ **MDOT PIN: 11325.00**

Name of Applicant: **State of Maine Department of Transportation** **Name of Contact:** **David Gardner**
Mailing Address: **16 Station State House** **Town/City:** **Augusta** **State:** **Me.** **Zip Code:** **04330-0016**
Daytime Telephone #: **(207)-624-3105** **Name of Wetland, Water Body or Stream:** **St John River**

Detailed Directions to Site: Project is on Rte 1 beginning at the southerly end of Fish River Bridge and extending northerly 0.58 of a mile to the Canadian Border.

Town/City: **Fort Kent** **Map #:** N/A **Lot #:** N/A **County:** **Aroostook**

Description of Project: Highway overlay involving culvert, guardrail, slopw and ditch maintenance and repairs. The project will be performed in accordance with erosion control measures conforming with the latest versions of the *State of Maine Department of Transportation Standard Specifications for Highways and Bridges* and the *Department of Transportation's Best Management Practices for Erosion and Sediment Control.*

Part of a larger project? ☐**Yes** ☒**No**

(**CHECK ONE**) This project... ☒ does ☐ does not ...involve work below mean low water.

I am filing notice of my intent to carry out work which meets the requirements for Permit By Rule (PBR) under DEP Regulation, Chapter 305. I have a copy of PBR Sections checked below. I have read and will comply with all of the standards.

☐Sec. (2) Soil Disturbance	☐Sec. (8) Shoreline stabilization	☐Sec. (14) Piers, Wharves & Pilings
☐Sec. (3) Intake Pipes	☐Sec. (9) Utility Crossing	☐Sec. (15) Public Boat Ramps
☐Sec. (4) Replacement of Structures	☐Sec. (10) Stream Crossing	☐Sec. (16) Coastal Sand Dune Projects
☐Sec. (5) REPEALED	☒Sec. (11) State Transport. Facilities	☐Sec. (17) Transfers/Permit Extension
☐Sec. (6) Movement of Rocks or Vegetation	☐Sec. (12) Restoration of Natural Areas	☐Sec. (18) Maintenance Dredging
☐Sec. (7) Outfall Pipes	☐Sec. (13) F&W Creation/Enhance/Water Quality Improvement	

I authorize staff of the Departments of Environmental Protection, Inland Fisheries & Wildlife, and Marine Resources to access the project site for the purpose of determining compliance with the rules. I also understand that ***this permit is not valid until approved by the Department or 14 days after receipt by the Department, whichever is less.***

I have attached all of the following required submittals. **NOTIFICATION FORMS CANNOT BE ACCEPTED WITHOUT THE NECESSARY ATTACHMENTS:**

- ■ **A $50 (non-refundable) payment shall be done by internal billing.**
- ■ ***Attach*** **a U.S.G.S. topo map or Maine Atlas & Gazetteer map with the project site clearly marked.**
- ☐ ***Attach*** **photographs showing existing site conditions (unless not required under standards).**

Signature of Applicant: _____ **Date:** 07/28/03
John E. Dority, Chief Engineer

Keep the bottom copy as a record of permit. Send the form with attachments via certified mail to the Maine Dept. of Environmental Protection **at the appropriate regional office listed below**. The DEP will send a copy to the Town Office as evidence of the DEP's receipt of notification. No further authorization by DEP will be issued after receipt of notice. Permits are valid for two years. **Work carried out in violation of any standard is subject to enforcement action.**

AUGUSTA DEP STATE HOUSE STATION 17 AUGUSTA, ME 04333-0017 (207)287-2111 PORTLAND DEP 312 CANCO ROAD PORTLAND, ME 04103 (207)822-6300 BANGOR DEP 106 HOGAN ROAD BANGOR, ME 04401 (207)941-4570 PRESQUE ISLE DEP 1235 CENTRAL DRIVE PRESQUE ISLE, ME 04769 (207)764-0477

OFFICE USE ONLY	Ck.#	Staff	Staff	
PBR # FP	Date	Acc. Date	Def. Date	After Photos

Chapter 305: PERMIT BY RULE Section 11
State Transportation Facilities

1. Introduction. A "permit by rule" or "PBR", when approved by the Department of Environmental Protection (DEP), is an approval for an activity that requires a permit under the Natural Resources Protection Act (NRPA). Only those activities described in this chapter may proceed under the PBR process. A PBR activity will not significantly affect the environment if carried out in accordance with this chapter, and generally has less of an impact on the environment than an activity requiring an individual permit. A PBR satisfies the Natural Resources Protection Act (NRPA) permit requirement and Water Quality Certification requirement.

If a proposed activity is not described in this chapter, or will not be conducted in accordance with the standards of this chapter, the applicant must obtain an individual permit prior to beginning the activity.

A. Location of activity. The location of an activity may affect whether an activity qualifies for PBR, and whether review by the Department of Inland Fisheries and Wildlife is required.

(1) Type of resource. For some types of activities, the availability of a PBR is affected by the type of natural resource in or adjacent to which the activity is proposed. For example, an applicant proposing an activity consisting of "Movement of rocks or vegetation" may receive a PBR only if the activity will take place in a great pond, river, stream or brook. Limitations concerning the location of activities are addressed in the "Applicability" provision in each section of this chapter.

(2) Essential habitat. Essential habitats include areas critical to the survival of threatened and endangered species such as the bald eagle, least tern, roseate tern, and piping plover. If the activity is located in essential habitat, such as near an eagle nesting site, a PBR is only available if the applicant obtains written approval from the Department of Inland Fisheries and Wildlife (IF&W). This approval from IF&W must be submitted to the DEP with the PBR notification form, and the applicant must follow any conditions stated in the IF&W approval.

NOTE: Maps showing areas of essential habitat are available from the Department of Inland Fisheries and Wildlife regional headquarters, municipal offices, the Land Use Regulation Commission (for unorganized territories) and DEP regional offices. If the activity is located in essential habitat, IF&W must be contacted to request and obtain a "certification of review and approval".

B. Notification. The applicant must file notice of the activity with the DEP prior to beginning work on the activity. The notification must be on a form provided by the DEP and must include any submissions required in this chapter. The applicant must keep a copy to serve as the permit.

The notification form must be sent to the DEP by certified mail (return receipt requested), or hand delivered to the DEP and date stamped by the department.

C. Effective period

(1) Beginning of period. The PBR becomes effective 14 calendar days after the DEP receives the notification form, unless the DEP approves or denies the PBR prior to that date. If the DEP does not speak with or write to the applicant within this 14 day period regarding the PBR notification, the applicant may proceed to carry out the activity.

There are three exceptions regarding the effective date of an approved PBR:

(a) Activities listed in Section 10 (Stream crossings) occurring in association with forest management are exempt from the 14 day waiting period.

(b) Activities listed in Section 2 (Soil disturbance) and Section 10 (Stream crossings) performed or supervised by individuals currently certified in erosion control practices by the DEP are exempt from the 14 day waiting period. To be certified in erosion control practices, an individual must successfully complete all course requirements of the Voluntary Contractor Certification Program administered by the DEP's Nonpoint Source Training and Resource Center.

(c) Activities that are part of a larger project requiring a permit under the Site Location of Development or the Storm Water Management Acts may not proceed until any required permit under those laws is obtained.

NOTE: Activities that are part of a larger project may require other permits from the DEP also. These other laws may prohibit the start of construction of any part of the project unless a permit under that law is obtained. In these cases, while not a violation of this rule, starting work on a PBR approved activity would be a violation of those other applicable laws.

(2) End of period. The PBR is generally effective for 2 years from the date of approval, except that a PBR for "Replacement of structures" under Section 4 is effective for 3 years.

NOTE: Activities that qualify under this chapter may need to meet other local, state and federal requirements. Examples -- (1) If an activity extends below the low water line of a lake, coastal wetland or international boundary water, the applicant should contact the Bureau of Parks and Lands (287-3061) concerning possible lease or easement requirements, or (2) If an activity will involve work below the mean high water line in navigable waters of the United States, the applicant should contact the Army Corps of Engineers (623-8367).

D. Discretionary authority. Notwithstanding compliance with the PBR applicability requirements and standards set forth in this chapter, the DEP may require an individual permit application to be filed in any case where credible evidence indicates that the activity:

(1) May violate the standards of the NRPA (38 M.R.S.A. Section 480-D);

(2) Could lead to significant environmental impacts, including cumulative impacts; or

(3) Could adversely impact a resource of special concern.

If an individual permit is required pursuant to this subsection, the DEP shall notify the applicant in writing within the 14 calendar day waiting period described in sub-section (C) above. When the DEP notifies an applicant than an individual permit is required, no work may be conducted unless and until the individual permit is obtained.

E. Violations. A violation of law occurs when a person, or his or her agent, performs or causes to be performed any activity subject to the NRPA without first obtaining a permit from the DEP, or acts contrary to the provisions of a permit. The person, his or her agent, or both, may be held

responsible for the violation. Commonly, the "person" is the landowner, and the "agent" is the contractor carrying out the activity. A violation occurs when:

(1) An activity occurs that is not allowed under PBR, whether or not a PBR notification form has been filed with and/or approved by the DEP;

(2) An activity occurs that is allowed under PBR, but a PBR for the activity has not become effective prior to the beginning of the activity; or

(3) An activity occurs that is allowed under PBR and a PBR for the activity is in effect, but the standards specified in this chapter are not met.

See the "applicability" provision under each activity for rules concerning what activities are allowed under PBR. A PBR is only valid for the person listed on the notification form, or for his or her agent.

Each day that a violation occurs or continues is considered a separate offense. Violations are subject to criminal penalties and civil penalties of not less than $100 nor more than $10,000 for each day of that violation (38 M.R.S.A. Section 349).

NOTE: A local Code Enforcement Officer (CEO) may take enforcement action for a violation of the Natural Resources Protection Act if he or she is authorized to represent a municipality in District Court, and he or she has been certified as familiar with court procedures, 30-A M.R.S.A. Section 4452(7).

Chapter 305 Section 11

State transportation facilities

A. Applicability

(1) This section applies to the maintenance, repair, reconstruction, rehabilitation, replacement or minor construction of a State Transportation Facility carried out by, or under the authority of, the Maine Department of Transportation or the Maine Turnpike Authority, including any testing or preconstruction engineering, and associated technical support services.

(2) This section does not apply to an activity within a coastal sand dune system.

NOTE: The construction of a transportation facility other than roads and associated facilities may be subject to the Storm Water Management Law, 38 M.R.S.A. Section 420-D.

B. Standards

(1) Photographs of the area to be altered by the activity must be taken before work on the site begins. The photographs must be kept on file and be made available at the request of the DEP.

(2) The activity must be reviewed by the Department of Inland Fisheries and Wildlife, the Department of Marine Resources, the Atlantic Salmon Authority, and the DEP's Division of Environmental Assessment prior to the notification being filed with the DEP. The activity must be performed according to any recommendations from these authorities.

(3) The activity must be performed in accordance with erosion control measures conforming with the State of Maine Department of Transportation Standard Specifications for Highways and Bridges Revision of April 1995 and with the Department of Transportation's Best Management Practices for Erosion and Sediment Control, September 1997.

NOTE: Guidance on the use of erosion control best management practices can be obtained from the on site Construction Manager.

(4) Alignment changes may not exceed a distance of 200 feet between the old and new center lines in any natural resource.

(5) The activity may not alter more than 300 feet of shoreline (both shores added together) within a mile stretch of any river, stream or brook, including any bridge width or length of culvert.

(6) The activity may not alter more than 150 feet of shoreline (both shores added together) within a mile stretch of any outstanding river segment identified in 38 M.R.S.A. 480-P, including any bridge width or length of culvert.

(7) The activity must minimize wetland intrusion. The activity is exempt from the provisions of Chapter 310, the Wetland Protection Rules, if the activity alters less than 15,000 square feet of natural resources per mile of roadway (centerline measurement) provided that the following impacts are not exceeded within the 15,000 square foot area:

(a) 1,000 square feet of coastal wetland consisting of salt tolerant vegetation or shellfish habitat; or

(b) 5,000 square feet of coastal wetland not containing salt tolerant vegetation or shellfish habitat; or

(c) 1,000 square feet of a great pond.

All other activities must be performed in compliance with all sections of Chapter 310, the Wetland Protection Rules, except 310.2(C), 5(A), 9(1), 9(B) and 9(C).

(8) The activity may not permanently block any fish passage in any watercourse containing fish. The applicant must improve passage beyond what restriction may already exist unless the Department of Inland Fisheries and Wildlife, the Department of Marine Resources, the Atlantic Salmon Authority and the DEP's Division of Environmental Assessment concur that the improvement is not necessary.

(9) Rocks may not be removed from below the normal high water line of any coastal wetland, freshwater wetland, great pond, river, stream or brook except to the minimum extent necessary for completion of work within the limits of construction.

(10) If work is performed in a river, stream or brook that is less than three feet deep at the time and location of the activity, with the exception of culvert installation, the applicant must divert flow away from the activity while work is in progress.

(a) Diversion may be accomplished by the use of stable, inert material. No more than two thirds (2/3) of stream width may be diverted at one time.

(b) Any material used to divert water flow must be completely removed upon completion of the activity, and the stream bottom must be restored to its original condition.

(c) A pump may be operated, where necessary, for a temporary diversion. The pump outlet must be located and operated such that erosion or the discharge of sediment to the water is prevented.

NOTE: Guidance on the appropriate location of a diversion and materials which should be used for a stream diversion can be obtained from the on site Construction Manager.

(11) Wheeled or tracked equipment may not operate in the water. Equipment operating on the shore may reach into the water with a bucket or similar extension. Equipment may cross streams on rock, gravel or ledge bottom.

(12) All wheeled or tracked equipment that must travel or work in a vegetated wetland area must travel and work on mats or platforms.

(13) Any debris or excavated material must be stockpiled either outside the wetland or on mats or platforms. Hay bales or silt fence must be used, where necessary, to prevent sedimentation. Any debris generated during the activity must be prevented from washing downstream and must be removed from the wetland or water body. Disposal of debris must be in conformance with the Maine Hazardous Waste, Septage and Solid Waste Management Act, 38 M.R.S.A. Section 1301 et seq.

(14) Work below the normal high water line of a great pond, river, stream or brook must be done at low water except for emergency work or work agreed to by the resource agencies listed in paragraph 2 above. Measures, such as a silt boom or staked fencing, must be employed to reduce and isolate turbidity.

(15) Perimeter controls must be installed before the work starts. Disturbance of natural resources beyond the construction limits shown on the plans is not allowed under this rule.

NOTE: Guidance on the location of construction limits can be obtained from the on site Construction Manager.

(16) The use of untreated lumber is preferred. Lumber pressure treated with chromated copper arsenate (CCA) may be used, provided it is cured on dry land in a manner that exposes all surfaces to the air for a period of at least 21 days prior to construction. Wood treated with creosote or pentachlorophenol may not be used where it will contact water.

(17) A temporary road for equipment access must be constructed of crushed stone, blasted ledge, or similar materials that will not cause sedimentation or restrict fish passage. Such roads must be completely removed at the completion of the activity. In addition, any such temporary roads which are in rivers, streams or brooks, must allow for a passage of stormwater flows associated with a 10-year storm.

(18) Soil may not be disturbed during any period when soils are saturated due to rain or snow melt, except as necessary to protect work in progress or as required for bridge maintenance activities. Areas where soils are saturated (i.e. water drips from the soil when squeezed by hand, or the soil is capable of being rolled into a rod 1/8th inch in diameter that does not crumble) must be immediately mulched if they are disturbed.

(19) Disturbed soil must be protected within one week from the time it was last actively worked, and prior to any storm event, using temporary or permanent measures such as the placement of riprap, sod, mulch, erosion control blankets, or other comparable measures.

(20) Hay bale or straw mulch, where used, must be applied at a rate of at least one bale per 500 square feet (1 to 2 tons per acre).

(21) If mulch is likely to be moved because of steep slopes or wind exposure, it must be anchored with netting, peg and twine, binder or other suitable method and must be maintained until a catch of vegetation is established over the entire disturbed area.

(22) In addition to the placement of riprap, sod, erosion control blankets or mulch, additional steps must be taken where necessary to prevent sedimentation of the water Evidence of sedimentation includes visible sheet, rill or gully erosion, discoloration of water by suspended particles and/or slumping of banks. Silt fences, staked hay bales and other sedimentation control measures, where planned for, must be in place prior to the commencement of an activity, but must also be installed whenever necessary to prevent erosion and sedimentation.

NOTE: Guidance on the location and proper installation of erosion control measures can be obtained from the on site Construction Manager.

(23) Temporary erosion control measures must be maintained and inspected weekly until the site is permanently stabilized with vegetation or other permanent control measures. Erosion control measures must also be inspected immediately prior to and following storms.

(24) Permanent erosion control measures protecting all disturbed areas must be implemented within 30 days from the time the areas were last actively worked, or for fall and winter activities by the following June 15, except where precluded by the type of activity (e.g. riprap, road surfaces, etc.). The permanent erosion control measures must be maintained.

(25) The applicant shall immediately take appropriate measures to prevent erosion or sedimentation from occurring or to correct any existing problems, regardless of the time of year.

(26) Non-native species may not be planted in restored areas.

(27) Disposal of debris must be in conformance with Maine Hazardous Waste, Septage and Solid Waste Management Act, 38 M.R.S.A. Sections 1301 et seq.

(28) Disturbance of vegetation must be avoided, if possible. Where vegetation is disturbed outside of the area covered by any road or structure construction, it must be reestablished immediately upon completion of the activity and must be maintained.

(29) A vegetated area at least 25 feet wide must be established and maintained between any new stormwater outfall structure and the high water line of any open water body. A velocity reducing structure must be constructed at the outlet of the stormwater outfall that will create sheet flow of stormwater, and prevent erosion of soil within the vegetated buffer. If the 25 foot vegetated buffer is not practicable, the applicant must explain the reason for a lesser setback in writing. Approval from the DEP must be in writing and any recommendations must be incorporated into the activity.

C. Definitions. The following terms, as used in this chapter, have the following meanings, unless the context indicates otherwise:

(1) Diversion. A rerouting of a river, stream or brook to a location outside of its established channel.

(2) Fill. a. (verb) To put into or upon, supply to, or allow to enter a water body or wetland any earth, rock, gravel, sand, silt, clay, peat, or debris; b. (noun) Material, other than structures, placed in or immediately adjacent to a wetland or water body.

(3) Floodplain wetlands. Freshwater wetlands that are inundated with flood water during a 100-year flood event based on flood insurance maps produced by the Federal Emergency Agency or other site specific information.

(4) Riprap. Rocks that are fit into place, usually without mortar, on a slope as defined in the State of Maine, Department of Transportation, Standard Specifications for Highway and Bridges, revision of April 1995.

Permit No: GP-39

Effective Date: Sept. 29, 2000
Expiration Date: Sept. 29, 2005

Applicant: General Public, State of Maine

DEPARTMENT OF THE ARMY
PROGRAMMATIC GENERAL PERMIT
STATE OF MAINE

The New England District of the U.S. Army Corps of Engineers hereby issues a programmatic general permit (PGP) that expedites review of minimal impact work in coastal and inland waters 1 and wetlands within the State of Maine. Activities with minimal impacts, as specified by the terms and conditions of this general permit and on the attached DEFINITION OF CATEGORIES sheets, are either non-reporting (provided required local and state permits are received), or are reporting, to be screened by the Corps and Federal Resource Agencies for applicability under the general permit. This general permit does not affect the Corps individual permit review process or activities exempt from Corps jurisdiction.

Activities Covered: work and structures that are located in, or that affect, navigable waters of the United States (regulated by the Corps under Section 10 of the Rivers and Harbors Act of 1899) and the discharge of dredged of fill material into waters of the United States (regulated by the Corps under Section 404 of the Clean Water Act), and the transportation of dredged material for the purpose of disposal in the ocean (regulated by the Corps under Section 103 of the Marine Protection, Research and Sanctuaries Act).

PROCEDURES:

A. **State Approvals**

For projects authorized pursuant to this general perrnit that are also regulated by the State of Maine, the following state approvals are also required and must be obtained in order for this general permit authorization to be valid (applicants are responsible for ensuring that all required state permits and approval have been obtained):

(a) Maine Department of Environmental Protection (DEP): Natural Resources Protection Act permit, including permit-by-rule and general permit authorizations; Site Location and Development Act permit; and Maine Waterway Development and Conservation Act.
(b) Maine Department of Conservation: Land Use Regulation Commission (LURC) permit.
(c) Maine Department of Marine Resources: Lease.
(d) Bureau of Public Lands, Submerged Lands: Lease.

Note that projects not regulated by the State of Maine (e.g., seasonal floats or moorings) may still be authorized by this general permit.

B. **Corps Authorizations: Category I (Non-Reporting)**

Work in Maine subject to Corps jurisdiction that meets the definition of Category I on the attached DEFINITION OF CATEGORIES sheets and that meets all of this permit's other conditions, does not require separate application to the Corps of Engineers. If the State or the Corps does not contact the applicant for PBRs and Tier One permits during the State's Tier One 30-day review period, Corps approval may be assumed and the project may proceed. Refer to the Procedures Section at Paragraph E below for additional information regarding screening.

Note that the review thresholds under Category I apply to single and complete projects i only (see special condition 5). **Also note that Category I does not apply to projects occurring in a component of, or within 0.25 miles up and downstream of the main stem or tributaries of a river segment of the National Wild and Scenic River System** (see condition 11, and page 9 for the listed rivers in Maine).

There are also restrictions on other national lands or concerns, which must be met in order for projects to be eligible for authorization under this PGP. Refer to special conditions 6-13 under Paragraph F below.

Work that is not regulated by the State of Maine, but that is subject to Corps jurisdiction, is eligible for Corps authorization under this PGP in accordance with the review thresholds and conditions contained herein.

Although Category I projects are non-reporting, the Corps reserves the right to require screening or an individual permit review if there are concerns for the aquatic environment or any other factor of the public interest (see special condition 4 on Discretionary Authority). The Corps review or State/Federal screening process may also result in project modification, mitigation or other special conditions necessary to minimize impacts and protect the aquatic environment as a requirement for PGP approval.

C. Corps Authorization: Category II (Reporting - requiring screening)
APPLICATION PROCEDURES

For projects that do not meet the terms of Category I (see DEFINITION OF CATEGORIES sheets), the Corps, State, and Federal Resource Agencies will conduct joint screening meetings to review applications. If projects are concurrently regulated by the DEP or LURC, applicants do not need to submit separate applications to the Corps. For projects not regulated by DEP or LURC, applicants must submit an application to the Corps Maine Project Office for a case-by-case determination of eligibility under this general permit (Category II). **Category II projects may not proceed until written notification is received from the Corps.**

Category II projects which occur in a component of, or within 0.25 mile up or downstream of the main stem or tributaries of a river segment of the National Wild and Scenic River System, will be coordinated with the National Park Service (see special condition 11, and page 9 for listed rivers in Maine).

There are also restrictions on other national lands or concerns, which must be met in order for projects to be eligible for authorization under this PGP. Refer to special conditions 6-14 under Paragraph E below.

Category II applicants shall submit a copy of their application materials to the Maine Historic Preservation Commission and/or applicable Indian tribe(s) at the same time, or before, they apply to the DEP, LURC, or the Corps so that the project can be reviewed for the presence of historic/archaeological resources in the project area that may be affected by the proposed work. **Applications to the DEP or the Corps should include information to indicate that this has been done (applicant's statement or copy of cover letter to Maine Historic Preservation Commission and/or Indian tribe(s)).**

The Corps may require additional information on a case-by-case basis as follows:

(a) purpose of project;

(b) 8 1/2" by l l " plan views of the entire property including property lines and project limits with existing and proposed conditions **(legible, reproducible plans required);**

(c) wetland delineation for the site, information on the basis of the delineation, and calculations of waterway and wetland impact areas (see special condition 2);

(d) typical cross-section views of all wetland and waterway fill areas and wetland replication areas;

(e) delineation of submerged aquatic vegetation, e.g., eel grass beds, in tidal waters;

(f) area, type and source of fill material to be discharged into waters and wetlands, including the volume of fill below ordinary high water in inland waters and below the high tide line in coastal waters;

(g) mean low, mean high water and high tide elevations in navigable waters;

(h) limits of any Federal navigation project in the vicinity and State Plane coordinates for the limits of the proposed work closest to the Federal project;

(i) on-site alternatives analysis (contact Corps for guidance);

(j) identify and describe potential impacts to Essential Fish Habitat (contact Corps for guidance);

(k) for dredging projects, include:
1) the volume of material and area in square feet to be dredged below mean high water,
2) existing and proposed water depths,
3) type of dredging equipment to be used,
4) nature of material (e.g., silty sand),

5) any existing sediment grain size and bulk sediment chemistry data for the proposed or any nearby projects,
6) information on the location and nature of municipal or industrial discharges and occurrences of any contaminant spills in or near the project area,
7) location of the disposal site (include locus sheet),
8) shellfish survey, and
9) sediment testing, including physical, chemical and biological testing. For projects proposing open water disposal, applicants are encouraged to contact the Corps as early as possible regarding sampling and testing protocols.

The Corps may request additional information. Dredging applicants may be required to conduct a shellfish and/or eel grass survey and sediment testing, including physical, chemical and biological testing. Sediment sampling and testing plans should be prepared or approved by the Corps before the samples are collected.

STATE-FEDERAL SCREENING PROCEDURES:

The Corps intends to utilize the application information required by the State for its regulatory program to the maximum extent practicable and the Corps normally will not be interacting with an applicant who is concurrently making application to the DEP or LURC. Projects not regulated by the State, but needing Corps of Engineers approval, **must apply directly to the Corps.** The joint screening meeting for Category II projects will occur regularly at the Corps or State of fices and will involve representatives from the DEP, the Corps, the U.S. Environmental Protection Agency, the U.S. Fish and Wildlife Service, and the National Marine Fisheries Service.

The Corps and Federal Resource Agencies will classify the project within the State's review period, not to exceed 60 days, as: 1) approvable under the PGP as proposed; 2) needs additional information, including possible project modification, mitigation or other special conditions to minimize impacts; or 3) exceeds the terms or conditions of the PGP, including the minimal effects requirement, and an individual permit review will be required. In addition, the Corps retains the ability to exercise its discretionary authority and require an individual permit, irrespective of whether the terms and conditions of this general permit are met, based on concerns for the aquatic environment or any factor of the public interest (see special condition 4 on Discretionary Authority). All Category II projects must receive written approval from the Corps before work can proceed. If the project is not approvable as proposed, the DEP, LURC, or the Corps will contact the applicant to discuss the concerns raised. If the applicant is unable to resolve the concerns, the Corps, independently or at the request of the Federal Resource Agencies, will require an individual permit for the project. The applicant will be notified of this in writing, along with information about submitting the necessary application materials. The comments from the Federal Resource Agencies to the Corps may be verbal initially, and must be made within 10 working days of the screening meeting. These comments must be confirmed in writing within 10 calendar days of the verbal response if the Resource Agency(ies) will request an individual permit. The Federal Resource Agency's comments must reflect a concern within their area of expertise, state the species or resources that could be impacted by the project, and describe the impacts that either individually or cumulatively will be more than minimal.

MINERALS MANAGEMENT SERVICE (MMS) REVIEW

For Category II projects which involve construction of solid fill structures or discharge of fills along the coast which may extend the coastline or baseline from which the territorial sea is measured, coordination between the Corps and Minerals Management Service (MMS), Continental Shelf (OCS) Survey Group, will be needed (pursuant to the Submerged Lands Act, 43 U.S.C., Section 1301-1315, 33 CFR 320.4(f). During the screening period, the Corps will forward project information to MMS for their review. MMS will coordinate their determination with the Department of the Interior (DOI) Solicitor's Office. The DOI will have 15 calendar days from the date MMS is in receipt of project information to determine if the baseline will be affected. No notification to the Corps within 15 day review period will constitute a "no affect" determination. Otherwise, the solicitor's notification to the Corps may be verbal but must be followed with a written confirmation within 10 business days from the date of the verbal notification. This procedure will be eliminated if the State of Maine provides a written waiver of interest in any increase in submerged lands caused by a change in the baseline resulting from solid fill structure or fills authorized under this general permit.

D. Corps Authorization: Category III (Individual Permit)

Work that is in the INDIVIDUAL PERMIT category on the attached DEFINITION OF CATEGORIES sheets, or that does not meet the terms and conditions of this general permit, will require an application for an individual permit from the Corps of Engineers (see 33 CFR Part 325.1). The screening procedures outlined above will only serve to delay project review in such cases. The applicant should submit the appropriate application materials (including the Corps application form) at the earliest possible date. General information and application forms can be obtained at (207) 623-8367 (Maine Field Office), (800) 343-4789, or (800) 362-4367 in Massachusetts. Individual water quality certification and coastal zone management consistency concurrence will be required from the State of Maine before Corps permit issuance.

E. Programmatic General Permit Conditions:

The following conditions apply to activities authorized under the PGP, including all Category I (non-reporting) and Category II (reporting - requiring screening) activities:

GENERAL REQUIREMENTS:

1. **Other Permits.** Authorization under this general permit does not obviate the need to obtain other Federal, state, or local authorizations required by law.

2. **Applicability of this general permit shall be evaluated with reference to Federal jurisdictional boundaries.** Applicants are responsible for ensuring that the boundaries used satisfy the federal criteria defined at 33 CFR 328-329.

3. **Minimal Effects.** Projects authorized by this general permit shall have minimal individual and cumulative adverse environmental impacts as determined by the Corps.

4. **Discretionary Authority.** Notwithstanding compliance with the terms and conditions of this permit, the Corps of Engineers retains discretionary authority to require review for an individual permit based on concerns for the aquatic environment or for any other factor of the public interest. This authority is invoked on a case-by-case basis whenever the Corps determines that the potential consequences of the proposal warrant individual review based on the concerns stated above. This authority may be invoked for projects with cumulative environmental impacts that are more than minimal or if there is a special resource or concern associated with a particular project that is not already covered by the remaining conditions of the PGP and that warrants greater review.

Whenever the Corps notifies an applicant that an individual permit may be required, authorization under this general permit is void and no work may be conducted until the individual Corps permit is obtained or until the Corps notifies the applicant that further review has demonstrated that the work may proceed under this general permit.

5. **Single and Complete Projects.** This general permit shall not be used for piecemeal work and shall be applied to single and complete projects. All components of a single project and/or all planned phases of multi-phased projects shall be treated together as constituting one single and complete project (e.g., subdivisions should include all work such as roads, utilities, and lot development). This general permit shall not be used for any activity that is part of an overall project for which an individual permit is required.

NATIONAL CONCERNS:

6. St. **John/St. Croix Rivers.** This covers work within the Saint John and Saint Croix River basins that requires approval of the International Joint Commission. This includes any temporary or permanent use, obstruction or diversion of international boundary waters which could affect the natural flow or levels of waters on the Canadian side of the line, as well as any construction or maintenance of remedial works, protective works, dams, or other obstructions in waters downstream from boundary waters when the activity could raise the natural level of water on the Canadian side of the boundary.

7. **Historic Properties.** Any activity authorized by this general permit shall comply with Section 106 of the National Historic Preservation Act. Information on the location and existence of historic resources can be obtained from the Maine Historic Preservation Commission and the National Register of Historic Places. Federally recognized tribes (Penobscots, Passamaquoddys, Micmacs, and Maliseets) may know of the existence of other sites that may be of significance to their tribes. See page 14 for historic properties contacts.

Applicants with projects which will undergo the screening process (Category II) shall submit a copy of their application materials, with the name and address of the applicant clearly indicated, to the Maine Historic Preservation Commission, 55 Capitol Street, State House Station 65, Augusta, Maine 04333, and to the applicable tribe(s) to be reviewed for the presence of historic and/or archaeological resources in the permit area that may be affected by the proposed work. The Corps will then be notified by the Commission and/or

Tribe within 10 days if there are State and/or tribal concerns that the proposed work will have an effect on historic resources. The applicant should include with their application to the State or the Corps either a copy of their cover letter or a statement of having sent their application material to the Commission and Tribe(s).

If the permittee, either prior to construction or during construction of the work authorized herein, encounters a previously unidentified archaeological or other cultural resource, within the area subject to Department of the Army jurisdiction, that might be eligible for listing in the National Register of Historic Places, he/she shall stop work and immediately notify the District Engineer and the Maine Historic Preservation Commission and/or applicable Tribe(s).

8. **National Lands.** Activities authorized by this general permit shall not impinge upon the value of any National Wildlife Refuge, National Forest, or any area administered by the National Park Service.

9. **Endangered Species.** No activity is authorized under this general permit which
- may affect a threatened or endangered species or a species proposed for such designation as identified under the Federal Endangered Species Act (ESA),
- is likely to destroy or adversely modify the critical habitat or proposed critical habitat of such species,
- would result in a 'take' of any threatened or endangered species of fish or wildlife, or
- would result in any other violation of Section 9 of the ESA protecting threatened or endangered species of plants.

Applicants shall notify the Corps if any listed species or critical habitat, or proposed species or critical habitat, is in the vicinity of the project and shall not begin work until notified by the District Engineer that the requirements of the Endangered Species Act have been satisfied and that the activity is authorized. Information on the location of threatened and endangered species and their critical habitat can be obtained from the U.S. Fish and Wildlife Service and National Marine Fisheries Service (addresses attached, page 14).

10. **Essential Fish Habitat.** As part of the PGP screening process, the Corps will coordinate with the National Marine Fisheries Service (NMFS) in accordance with the 1996 amendments to the Magnuson-Stevens Fishery and Conservation Management Act to protect and conserve the habitat of marine, estuarine and anadromous finfish, mollusks, and crustaceans. This habitat is termed "essential fish habitat (EFH)", and is broadly defined to include "those waters and substrate necessary to fish for spawning, breeding, feeding, or growth to maturity." Applicants may be required to describe and identify potential impacts to EFH based upon the location of the proj ect, the activity proposed, and the species present. Conservation recommendations made by NMFS will normally be included as a permit requirement by the Corps. Information on the location of EFH can be obtained from the NMFS regulations (50 CFR Part 600) (address listed on page 14) and on their web site (http://www.nero.nmfs.gov/ro/doc/webintro.html).

The EFH designation for Atlantic salmon includes all aquatic habitats in the watershed of the following rivers and streams, including all tributaries to the extent that they are currently or were historically accessible for salmon migration:

St. Croix River	PleasantRiver	UnionRiver
Boyden River	Narraguagus River	Ducktrap River
Dennys River	Tunk Stream	Sheepscot River
Hobart Stream	Patten Stream	Kennebec River
Aroostook River	Orland River	Androscoggin River
East Machias River	Penobscot River	Presumpscot River
Machias River	Passagassawaukeag River	Saco River

11. **Wild and Scenic Rivers.** Any activity that occurs in a component of, or within 0.25 mile up or downstream of the main stem or tributaries of a river segment of the National Wild and Scenic River System, **must be reviewed by the Corps under the procedures of Category II of this general permit regardless of size of impact.** This condition applies to both designated wild and scenic rivers and rivers designated by Congress as study rivers for possible inclusion while such rivers are in an official study status. The Corps will consult with the National Park Service (NPS) with regard to potential impacts of the proposed work on the resource values of the Wild and Scenic River. The culmination of this coordination will be a determination by the NPS and the Corps that the work: (1) may proceed as proposed; (2) may proceed with recommended conditions; or (3) could pose a direct and adverse effect on the resource values of the river and an individual permit is required. If pre-application consultation between the applicant and the NPS has occurred whereby the NPS has made a determination that the proposed project is appropriate for authorization under this PGP (with respect to wild and scenic river issues), this determination should be furnished to the Corps with submission of the application. The address of the NPS can be found on Page 14 of this permit. *National Wild/Scenic Rivers System (Designated River in Maine) as of 5/2/00:* Allagash River beginning at Telos Dam continuing to Allagash checkpoint at Eliza Hole Rapids, approximately 3 miles upstream of the confluence with the St. John River. Length = 92 miles

12. **Federal Navigation Project.** Any structure or work that extends closer to the horizontal limits of any Corps navigation project than a distance of three times the project's authorized depth (see attached map following page 16 for locations of these projects) shall be subject to removal at the owner's expense prior to any future Corps dredging or the performance of periodic hydrographic surveys.

13. **Navigation.** There shall be no unreasonable interference with navigation by the existence or use of the activity authorized herein and no attempt shall be made by the permittee to prevent the full and free use by the public of all navigable waters at or adjacent to the activity authorized herein.

The permittee understands and agrees that, if future operations by the United States require the removal, relocation, or other alteration, of the structure or work herein authorized, or if, in the opinion of the Secretary of the Army or his authorized representative, said structure

or work shall cause unreasonable obstruction to the free navigation of the navigable waters, the permittee will be required, upon due notice from the Corps of Engineers, to remove, relocate, or alter the structural work or obstructions caused thereby, without expense to the United States. No claim shall be made against the United States on account of any such removal or alteration.

14. **Federal Liability.** In issuing this permit, the Federal Government does not assume any liability for the following: (a) damages to the permitted project or uses thereof as a result of other permitted or unpermitted activities or from natural causes; (b) damages to the permitted project or uses thereof as a result of current or future activities undertaken by or on behalf of the United States in the public interest; (c) damages to persons, property, or to other permitted or unpermitted activities or structures caused by the activity authorized by this permit; (d) design or construction deficiencies associated with the permitted work; (e) damage claims associated with any future modification, suspension, or revocation of this permit.

MINIMIZATION OF ENVIRONMENTAL IMPACTS:

15. **Minimization.** Discharges of dredged or fill material into waters of the United States shall be avoided and minimized to the maximum extent practicable, regardless of review category.

16. **Work in Wetlands.** Heavy equipment working in wetlands shall be avoided if possible, **and if required, shall be placed on mats or other measures taken** to minimize soil and vegetation disturbance. Disturbed areas in wetlands shall be restored to preconstruction contours and conditions upon completion of the work.

17. **Temporary Fill.** Temporary fill in waters and wetlands authorized by this general permit (e.g., access roads, cofferdams) shall be properly stabilized during use to prevent erosion. Temporary fill in wetlands shall be placed on geotextile fabric laid on existing wetland grade. Temporary fills shall be disposed of at an upland site, suitably contained to prevent erosion and transport to a waterway or wetland. Temporary fill areas shall be restored to their approximate original contours but not higher. No temporary fill shall be placed in waters or wetlands unless specifically authorized by the Corps.

18. **Sedimentation and Erosion Control.** Adequate sedimentation and erosion control management measures, practices and devices, such as phased construction, vegetated filter strips, geotextile silt fences or other devices, shall be installed and properly maintained to reduce erosion and retain sediment on-site during and after construction. They shall be capable of preventing erosion, of collecting sediment, suspended and floating materials, and of filtering fine sediment. These devices shall be removed upon completion of work and the disturbed areas shall be stabilized. The sediment collected by these devices shall be removed and placed at an upland location in a manner that will prevent its later erosion into a waterway or wetland. All exposed soil and other fills shall be permanently stabilized at the earliest practicable date.

19. **Waterway Crossings.**

(a) All temporary and permanent crossings of waterbodies shall be suitably culverted, bridged, or otherwise designed to withstand and to prevent the restriction of high flows, to maintain existing low flows, and to not obstruct the movement of aquatic life indigenous to the waterbody beyond the actual duration of construction.
(b) Temporary bridges, culverts, or cofferdams shall be used for equipment access across streams (NOTE: areas of fill and/or cofferdams must be included in total waterway/wetlands impacts to determine applicability of this general permit).
(c) For projects that otherwise meet the terms of Category I, instream construction work shall be conducted during the low flow period July 15 - October 1 in any year. Projects that are not to be conducted during that time period are ineligible for Category I and shall be screened pursuant to Category II, regardless of the waterway and wetland fill and/or impact area.

20. **Discharge of Pollutants.** All activities involving any discharge of pollutants into waters of the United States authorized under this general permit shall be consistent with applicable water quality standards, effluent limitations, standards of performance, prohibitions, and pretreatment standards and management practices established pursuant to the Clean Water Act (33 U.S.C. 1251) and applicable state and local laws. If applicable water quality standards, limitations, etc., are revised or modified during the term of this permit, the authorized work shall be modified to conform with these standards within six months of the effective date of such revision or modification, or within a longer period of time deemed reasonable by the District Engineer in consultation with the Regional Administrator of the Environmental Protection Agency. Applicants may presume that state water quality standards are met with issuance of the 401 Water Quality Certification.

21. **Spawning Areas.** Discharges into known 1) fish and shellfish spawning or nursery areas; and 2) amphibian and waterfowl breeding areas, during spawning or breeding seasons shall be avoided, and impacts to these areas shall be avoided or minimized to the maximum extent practicable during all times of year.

22. **Storage of Seasonal Structures.** Coastal structures such as pier sections and floats that are removed from the waterway for a portion of the year shall be stored in an upland location located above mean high water and not in tidal marsh.

23. **Environmental Values.** The permittee shall make every reasonable effort to carry out the construction or operation of the work authorized herein in a manner so as to maintain as much as is practicable, and to minimize any adverse impacts on, existing fish and wildlife and natural environmental values.

24. **Protection of Vernal Pools.** Impacts to uplands in proximity (within 500 feet) to the vernal pools referenced in DEFINITIONS OF CATEGORIES shall be minimized to the maximum extent possible.

PROCEDURAL CONDITIONS:

25. **Cranberry Development Projects.** For Cranberry development projects authorized under the PGP, the following conditions apply:

4

1. If a.cranberry bog is abandoned for any reason, the area must be allowed to convert to natural wetlands unless an individual permit is obtained from the Corps of Engineers allowing the discharge of fill for an alternate use.
2. No stream diversion shall be allowed under this permit.
3. No impoundment of perennial streams shall be allowed under this permit.
4. The project shall be designed and constructed to not cause flood damage on adjacent properties.

26. **Inspections.** The permittee shall permit the District Engineer or his authorized representative(s) to make periodic inspections at any time deemed necessary in order to ensure that the work is being performed in accordance with the terms and conditions of this permit. The District Engineer may also require post-construction engineering drawings for completed work, and post-dredging survey drawings for any dredging work. **To facilitate these inspections, the attached work notification form should be filled out and returned to the Corps for all Category II projects.**

27. Maintenance. The permittee shall maintain the work or structures authorized herein in good condition, including maintenance, to ensure public safety. Dredging projects: note that this does not include maintenance of dredging projects. Maintenance dredging is subject to the review thresholds described on the attached DEFINITION OF CATEGORIES sheets and/or any conditions included in a written Corps authorization.

28. **Property Rights.** This permit does not convey any property rights, either in real estate or material, or any exclusive privileges, nor does it authorize any injury to property or invasion of rights or any infringement of federal, state, or local laws or regulations. If **property associated with work authorized by the PGP is sold, the PGP authorization is automatically transferred to the new property owner. The new property owner should provide this information to the Corps in writing. No acknowledgement from the Corps is necessary.**

29. **Modification, Suspension, and Revocation.** This permit may be either modified, suspended, or revoked, in whole or in part, pursuant to the policies and procedures of 33 CFR 325.7 and any such action shall not be the basis for any claim for damages against the United States.

30. **Restoration.** The permittee, upon receipt of a notice of revocation of authorization under this permit, shall restore the wetland or waterway to its former condition without expense to the United States and as directed by the Secretary of the Army or his authorized representative. If the permittee fails to comply with such a directive, the Secretary or his designee may restore the wetland or waterway to its former condition, by contract or otherwise, and recover the cost from the permittee.

31. **Special Conditions.** The Corps, independently or at the request of the Federal Resource Agencies, may impose other special conditions on a project authorized pursuant to this general permit that are determined necessary to minimize adverse environmental effects or based on any other factor of the public interest. Failure to comply with all conditions of the authorization, including special conditions, will constitute a permit violation and may subject the permittee to criminal, civil, or administrative penalties or restoration.

32. **False or Incomplete Information.** If the Corps makes a determination regarding the eligibility of a project under this permit and subsequently discovers that it has relied on false, incomplete, or inaccurate information provided by the permittee, the permit shall not be valid and the government may institute appropriate legal proceedings.

33. **Abandonment.** If the permittee decides to abandon the activity authorized under this general permit, unless such abandonment is merely the transfer of property to a third party, he/she must restore the area to the satisfaction of the District Engineer.

34. **Enforcement cases.** This general permit does not apply to any existing or proposed activity in Corps jurisdiction associated with an on-going Corps of Engineers or Environmental Protection Agency enforcement action until such time as the enforcement action is resolved or the Corps determines that the activity may proceed independently without compromising the enforcement action. The Corps may choose not to accept applications or issue permits to any applicant with outstanding violations.

35. **Emergency situations.** This PGP can be used to authorize the repair, rehabilitation, or replacement of those structures destroyed by storms, floods, fire or other discrete unexpected and catastrophic event. In such situations and if the work exceeds Category I limitations, if applicant applies to the Corps within 30 days of the event, the Corps will attempt to contact the resource agencies for their approvals but, if unable to contact them, will issue an emergency permit and review them after-the-fact with the agencies at the next joint processing meeting. Proposed work submitted more than 30 days after the emergency will go through the standard PGP procedures.

DURATION OF AUTHORIZATION/GRANDFATHERING:

36. **Duration of Authorization.** Activities authorized under this general permit that have commenced (i.e., are under construction) or are under contract to commence in reliance upon this authorization will remain authorized provided the activity is completed within twelve months of the date of the general permit's expiration, modification, or revocation, unless discretionary authority has been exercised on a case-by-case basis to modify, suspend, or revoke the authorization in accordance with 33 CFR 325.2 (e)(2). Activities completed under the authorization of the general permit that was in effect at the time the activity was completed will continue to be authorized by the general permit.

37. **Previously Authorized Activities.**

(a) Activities which have commenced (i.e., are under construction or are under contract to commence) prior to the issuance date of this general permit, in reliance upon the terms and conditions of the non-reporting category of the previous Maine PGP shall remain authorized provided the activity is completed within twelve months of the date of issuance of this general permit, unless discretionary authority has been exercised on a case-by-case basis to modify, suspend, or revoke the authorization in accordance with special condition 4. The applicant must be able to document to the Corps satisfaction that the proj ect was under construction or contract by the appropriate date.

(b) Projects that have received written verification or approval from the Corps, based on applications made to the Corps prior to issuance of this general permit, for the previous Maine SPGP and PGP, Nationwide permits, regional general permits, or letters of permission shall remain authorized as specified in each authorization.

(c) This general permit does not affect activities authorized pursuant to 33 CFR Part 330.3 (activities occurring before certain dates).

For DISTRICT ENGiNEER Christine Gedfrey DATE 7 / 26 / 00

CONTACTS FOR MAINE PROGRAMMATIC GENERAL PERMIT:

U.S. Army Corps of Engineers
Maine Project Office
675 Western Avenue #3
Manchester, Maine 04351
207-623-8367
Fax # 207-623-8206

Federal Endangered Species
U.S. Fish and Wildlife Service
Maine Field Office
1033 South Main Street
Old Town, Maine 04468
207-827-5938
Fax # 207-827-6099

Federal Endangered Species and Essential Fish Habitat
National Marine Fisheries Service
One Blackburn Drive
Gloucester, Massachusetts 01939
978-281-9102
Fax # 978-281-9301

Wild and Scenic Rivers
National Park Service
North Atlantic Region
15 State Street
Boston, MA 02109
617-223-5203

Maine Historic Preservation Commission
55 Capitol Street
State House Station 65
Augusta, Maine 04333
207-287-2132
Fax # 207-287-2335

Aroostook Band of Micmacs
P.O. Box 772
Presque Isle, Maine 04769
207-764-1972
Fax # 207-764-7667

Passamaquoddy Tribe of Indians
Pleasant Point Reservation
Attn: Tribal Council
P.O. Box 343
Perry, Maine 04667
207-853-2600
Fax # 207-853-6039

Houlton Band of Maliseet Indians
Attn: Brenda Commander, Tribal Chief
Route 3 - Box 450
Houlton, Maine 04730
207-532-4273
Fax # 207-532-2660

Passamaquoddy Tribe of Indians
Indian Township Reservation
Attn: Donald Soctomah
P.O. Box 301
Princeton, Maine 04668
207-796-2301
Fax # 207-796-5256

Penobscot Indian Nation
Richard Hamilton, Chief
6 River Road
Indian Island Reservation
Old Town, Maine 04468
(207) 827-7776
Fax # 207-827-1137

Maine Department of Environmental Protection
(For State Permits and Water Quality Certifications)
Natural Resources Division
Bureau of Land and Water Quality Control
State House Station 17
Augusta, Maine 04333
207-287-2111

Southern Maine Regional Office
312 Canco Road
Portland, Maine 04103
201-822-6300

Eastern Maine Regional Office
106 Hogan Road
Bangor, Maine 04401
207-941-4570

Northern Maine Regional Office
1235 Central Drive
Skyway Park
Presque Isle, Maine 04769
207-764-0477

MaineLand UseRegulation Commission (LURC) offices
22 State House Station
Augusta, ME 04333-0022
207-287-2631
800-452-8711 (call to obtain appropriate LURC of fice)
Fax # 207-287-7439

45 Radar Road
Ashland,ME 04732-3600
207-435-7963
Fax # 207-435-7184

Lakeview Drive
P.O.BoxllO7
Greenville, ME 04441
207-695-2466
Fax # 207-695-2380

191 Main Street
EastMillinocket,ME 04430
207-746-2244
Fax # 207-746-2243

i

(For CZMDeterminations)
State Planning Office
Coastal Program
184 State Street
State House Station 38
Augusta, Maine 04333
207-287- 1009

Maine Department of Marine Resources
(For Aquaculture Leases)
McKown Point
Boothbay Harbor, Maine 04575
207-633-9500

(For Submerged Lands Leases)
Maine Department of Conservation
Bureau of Parks and Lands
22 State House Station
207-287-3061

A. INLAND WETLANDS (WATERS OF THE U.S.)[1]	CATEGORY I	CATEGORY II	INDIVIDUAL PERMIT
(a) NEW FILL/ EXCAVATION DISCHARGES	Less than 4,300 sf inland waterway and /or wetland fill and secondary impacts (e.g., areas drained, flooded or cleared). -- Includes projects covered by a State Tier One permit with no cumulative impacts over 15,000 sf in inland wetlands from previous permits, unauthorized work, and/or other state permits. -- Includes crossing of perennial waterways designated as Essential Fish Habitat (EFH) for Atlantic salmon[2] if the waterway is crossed with a span and footprints of the span abutments are outside ordinary high water with no more than 4,300 sf of associated wetland impact. -- Includes in-stream work of up to 4,300 sf of fill below ordinary high water in waterways not designated as EFH for Atlantic salmon[2] and performed in accordance with Maine Permit By Rule standards or a LURC permit.	4,300 sf to 3 acres inland waterway and/or wetland fill and secondary impacts (e.g., areas drained, flooded or cleared). -- Impact area includes all temporary and permanent fill and excavation discharges except for incidental fallback. -- Includes in-stream work, including crossings (other than a spanned crossing as described in Category I) with any discharge of fill below ordinary high water in perennial waterways designated as EFH for Atlantic salmon[2]. -- Time of year restrictions determined case-by-case.	Greater than 3 acres inland waterway and/or wetland fill and secondary impacts (e.g., areas drained, flooded or cleared). -- Impact area includes all temporary and permanent fill and excavation discharges except for incidental fallback[3]. In-stream work exceeding Category II limits. If EIS required by the Corps.

[1] Water of the U.S. in inland areas: inland rivers, streams, lakes, ponds and wetlands.
[2] Essential Fish Habitat for Atlantic salmon includes all aquatic habitats in the watersheds of the following rivers and streams, including all tributaries to the extent that they are currently or were historically accessible for salmon migration: St. Croix, Boyden, Dennys, Hobart Stream, Aroostook, East Machias, Machias, Pleasant, Narraguagus, Tunk stream, Patten Stream, Orland, Penobscot, Passagassawaukeag, Union, Ducktrap, Sheepscot, Kennebec, Androscoggin, Presumpscot and Saco River.
[3] The larger the impacts, the more likely an individual permit will be required. Projects involving widening, expansion or impacts to degraded or low value wetlands between 1-3 acres may be approved under Category II, subject to the Federal screening. The Corps recognizes and endorses the DEP Tier 2 upper thresholds of 1 acre. Compensatory mitigation is likely to be required at this level of impact.

	CATEGORY I	CATEGORY II	INDIVIDUAL PERMIT
(a) NEW FILL/ EXCAVATION DISCHARGES	-- Impact area includes all temporary and permanent fill and excavation discharges except for incidental fallback. -- In-stream work limited to July 15 - Oct. 1. -- This category excludes situations when a vernal pool of any size may be impacted, in accordance with the ME DEP definition of vernal pool[4]. -- This category excludes work within ¼ mile or a Wild and Scenic River[5]. -- This category excludes dams, dikes, or activities involving water withdrawal or water diversion. -- This category excludes work in National Wildlife Refuges.	Proactive restoration projects with any amount of impact can be reviewed under Category II. The Corps, in consultation with State and Federal agencies, must determine that net adverse effects are not more than minimal.	
(b) BANK STABILIZATION PROJECTS	Inland bank stabilization less than 500 ft. long and less than 1 cy fill per linear foot below ordinary high water in ponds, lakes, and waterway not designated as EFH for Atlantic salmon[2], provided there is no wetland fill. -- In-stream work limited to July 15 - Oct. 1.	Inland bank stabilization in ponds, lakes, and waterways not designated as EFH for Atlantic salmon[2] which exceeds Category I limits. Inland bank stabilization of any size below ordinary high water in waterways designed as EFH for Atlantic salmon[2]. -- Other stabilization exceeding Category I.	
(C) REPAIR AND MAINTENANCE OF AUTHORIZED FILLS	Repair or maintenance of existing, currently serviceable, authorized fills with no substantial expansion or change in use.	Replacement of non-serviceable fills, or repair or maintenance of serviceable fills with expansion of any amount up to 1 acre, or with a change in use.	Replacement of non-serviceable fills, or repair or maintenance of serviceable fills with greater than 1 acre of expansion.

[4] Vernal Pool: Naturally-occurring, or intentionally created for the purposes of compensatory mitigation, temporary to permanent bodies of water occurring in shallow depressions that fill during the spring and fall and may dry during the summer. Vernal pools have no permanent or viable populations of predatory fish. Vernal pools provide the primary breeding habitat for wood frogs, spotted salamanders, blue-spotted salamanders, and fairy shrimp, and provide habitat for other wildlife including several endangered and threatened species.

[5] National Wild/Scenic Rivers System (Designated River in Maine): Allagash River beginning at Telos Dam continuing to Allagash checkpoint at Eliza Hole Rapids, approximately 3 miles upstream of the confluence with the St. John River. Length = 92 miles.

4 5 6 7 8 ?

B. TIDAL WATERS AND NAVIGABLE WATERS[6]	CATEGORY I	CATEGORY II	INDIVIDUAL PERMIT
(a) FILL		Up to 1 acre waterway or wetland fill and secondary impacts (e.g., areas drained, flooded or cleared). Includes temporary and permanent waterway fill. -- Temporary tidal marsh impacts up to 1 acre. -- Permanent tidal marsh, mudflat, or vegetated shallows[7] fill up to 1,000 sf. -- Proactive restoration projects with any amount of impact can be reviewed under Cat. II. The Corps, in consultation with State and Federal agencies, must determine that net adverse effects are not more than minimal.	Greater than 1 acre waterway fill and secondary impacts (e.g., areas drained, flooded or cleared). Includes -- Temporary tidal marsh impacts over 1 acre. -- Permanent tidal marsh, mudflat, or vegetated shallows[7] fill over 1,000 sf.
(b) REPAIR AND MAINTENANCE WORK	Repair or maintenance of existing, currently serviceable, authorized structure or fills with no substantial expansion or change in use. -- Work must be in same footprint as original structure or fill	Repair or replacement of any non-serviceable structures or fill, or repair or maintenance of serviceable fills with expansion of any amount up to 1 acre, or with a change in use.	Replacement of non-serviceable structures or fill or repair or maintenance of serviceable structure or fill with expansion greater than 1 acre.

6 Navigable Waters: waters that are subject to the ebb and flow of the tide and Federally designated navigable waters (Penobscott River to Medway, Kennebec River to Moosehead Lake, and the portion of Umbagog Lake in Maine).

7 Vegetated Shallows: subtidal areas that support rooted aquatic vegetation such as eelgrass.

	CATEGORY I	CATEGORY II	INDIVIDUAL PERMIT
(c) DREDGING	Maintenance dredging of less than 1,000 cy with upland disposal. -- Proper siltation controls used -- Limited to work between November 1 and January 15. -- No impact to special aquatic sites8	Maintenance dredging of greater than 1,000 cy, new dredging of up to 25,000 cy, or projects that do not meet Category I. Disposal includes upland, open water or beach nourishment (above mean high water), only if material is determined suitable.	Maintenance dredging (any amount) in or affecting special aquatic sites7. See B(a) above for dredge disposal in wetlands or water. New dredging greater than 25,000 cy or any amount in or affecting special aquatic sites7.
(d) MOORINGS	-- Private, non-commercial, non-rental single boat moorings not associated with any boating facility? provided not located in a Federal Navigation Project, there is no interference with navigation, it is not located in vegetated shallows6, and it is within ¼ mile of the owner's residence or a public access point[10]. -- Minor relocation or previously authorized mooring and moored floats consistent with Harbormaster recommendations, provided it is also consistent with local regulations, is not located in vegetated shallows, and does not interfere with navigation.	Moorings that do not meet the terms of Category I (e.g., rental or service moorings) and moorings that meet the terms of Category I that are located in a Federal anchorage.	Moorings within the horizontal limits, or with moored vessels that extend, into the horizontal limits of a Federal Navigation Project, except those in Federal anchorages under Category II.

8 Special Aquatic Sites: include wetlands and salt marsh, mudflats, riffles and pools, and vegetated shallows.

? Boating Facilities: facilities that provide, rent, or sell mooring space, such as marinas, yacht, clubs, boat clubs, boat yards, town facilities, dockominiums, etc.

[10] Cannot be at a remote location to create a convenient transient anchorage.

	CATEGORY I	CATEGORY II	INDIVIDUAL PERMIT
(e) PILE-SUPPORTED STRUCTURES AND FLOATS	Reconfiguration of existing authorized docks, provided structures are not positioned over vegetated shallows[6] or salt marsh and provided floats are supported off substrate at low tide. No dredging, addition slips or expansion allowed.	Private piers and floats for navigational access to waterway (seasonal and permanent).	Structures, piers or floats that extend, or with docked/moored vessels that extend, into the horizontal limits of a Federal Navigation Project. Structures, including piers and floats, associated with a new or previously unauthorized boating facility[8].
(f) MISCELLANEOUS	-- Temporary buoys, markers, floats, etc., for recreational use during specific events, provided they are removed within 30 days after use is discontinued. -- Coast Guard approved aids to navigation. -- Oil spill clean-up temporary structures or fill. -- Fish/wildlife harvesting structures/fill (as defined by 33 CFR 330, App. A-4) -- Scientific measurement devices and survey activities such as exploratory drilling, surveying or sampling. -- Shellfish seeding (brushing the flats) projects[11]. -- Does not include oil or gas exploration and fills for roads or construction pads. -- This category excludes work in National Wildlife Refuges.	-- Structures or work in or affecting tidal or navigable waters that are not defined under any or the previous headings. Includes, but is not limited to, utility lines, aerial transmission lines, pipelines, outfalls, boat ramps, bridge fills/abutments, etc. -- Shellfish/finfish (other than Atlantic salmon), or other aquaculture facilities which are consistent with the Corps revised standard siting requirements and standard permit conditions dated 7/6/94, or as revised.	If EIS required by Corps.

[11] Brushing the flats: the placement of tree boughs, wooden lath structures, or small-mesh fencing on mudflats for the purpose of enhancing recruitment of soft-shell clams (Mya arenaria).