STATE OF MAINE
DEPARTMENT OF TRANSPORTATION
16 STATE HOUSE STATION
AUGUSTA, MAINE
04333-0016

JOHN ELIAS BALDACCI
GOVERNOR

DAVID A. COLE
COMMISSIONER

March 11, 2004
Subject: Whitneyville
Project No. STP-8960(00)X
PIN 8960.00
Bid Amendment No. 1

Dear Sir/Ms.:

Please make the following changes to your bid package:

Add the attached "Special Provision Section 107 Time (Supplemental Liquidated Damages for Fabrication Time)" dated March 2, 2004, one page.

Add the attached "Special Provision Section 502 Structural Concrete (QC/QA Acceptance Methods)" dated March 2, 2004, one page.

Please make the following changes to the plan sheets:

Delete Plan Sheets No. 8 of 25, 14 of 25, and 17 through 24, ten sheets total and replace with the attached Plan Sheets No. 8, 14, and 17 through 24 ten sheets total with a revision date of March 10, 2004.

Consider these changes prior to submitting your bid on March 17, 2004.

Sincerely,

for Diane Barnes

Scott Bickford
Contracts & Specifications Engineer

PRINTED ON RECYCLED PAPER

THE MAINE DEPARTMENT OF TRANSPORTATION IS AN AFFIRMATIVE ACTION - EQUAL OPPORTUNITY EMPLOYER

SPECIAL PROVISION
SECTION 107
TIME
(Supplemental Liquidated Damages for Fabrication Time)

107.8.1 Fabrication Time

The Department has budgeted for the following amounts of continuous fabrication/shop inspection for certain Work component:

Element	Time	Supplemental LD
1) Prestressed Concrete Superstructure Slabs	21 calendar days	$500 per calendar days

The contractor is responsible for requiring their fabricators and suppliers to produce these products for the Work continuously until finished, including any needed actions to correct unacceptable workmanship or materials. If the Department determines that the shop inspection beyond these times is required, then the corresponding Supplemental Liquidated Damages will be deducted as they occur from amounts otherwise due the Contractor. The Contractor will be notified by the Department when these times begin and when the allotted time will expire.

SPECIAL PROVISION
SECTION 502
STRUCTURAL CONCRETE
(QC/QA Acceptance Methods)

CONCRETE CLASS	ITEM NUMBER	DESCRIPTION	P	METHOD
A	502.21	Structural Concrete Abutment and Retaining Walls	$600	A
A	502.25	Structural Concrete Superstructure Slab	$600	A
LP	502.49	Structural Concrete Curb	$600	B

P values listed above reflect the price per cubic meter for all pay adjustment purposes.

METRIC	1. All dimensions are in millimeters unless otherwise noted. 2. All elevations and stations are in meters.	F.H.W.A. REG. NO.	STATE	PROJECT NUMBER	SHEET NO.	TOTAL SHEETS
		1	MAINE	STP-8960(00)X	8	25

008960.00

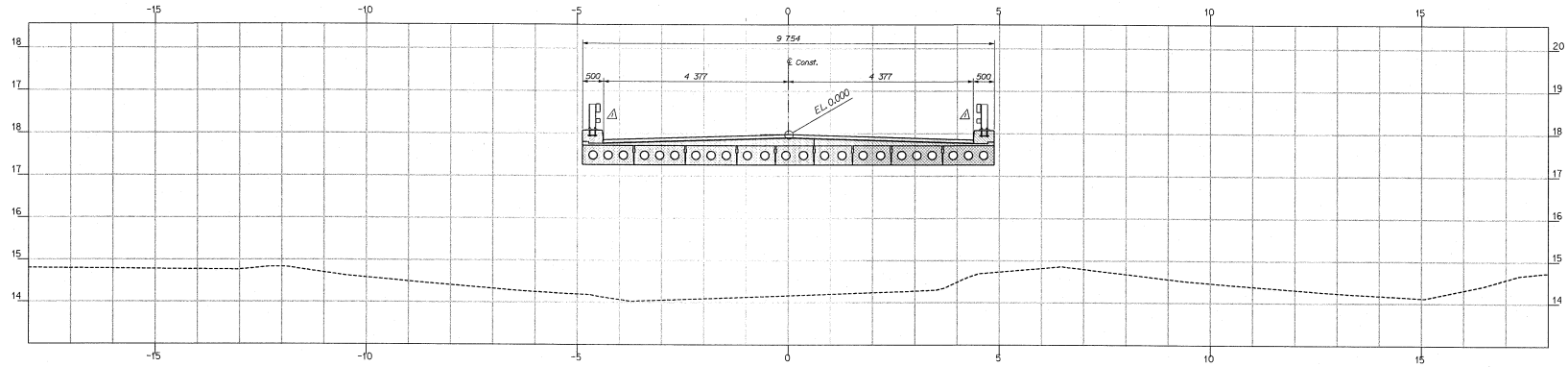

2+070.000

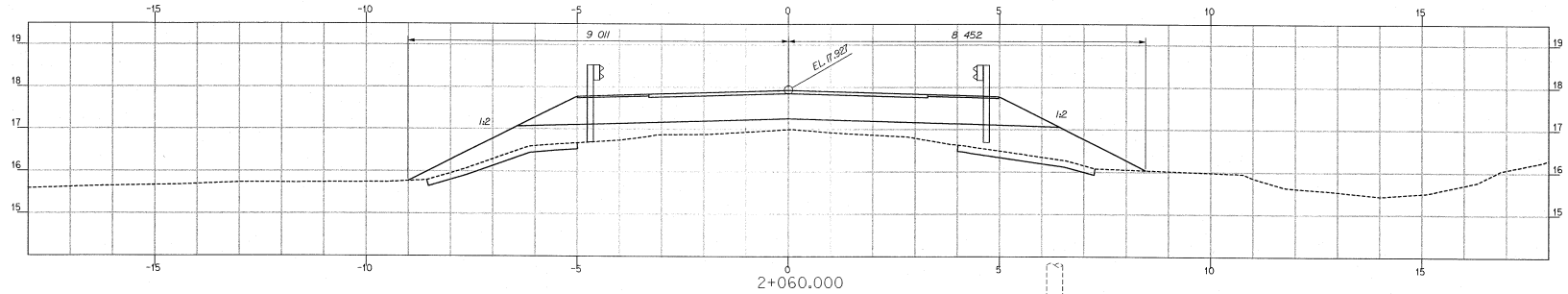

2+060.000

Sta. 2+059.26 ± to 2 + 93.55 ±
Install 34.29 m
GR Type 3b

Sta. 2+050.700 6.118 Rt
Support Pole

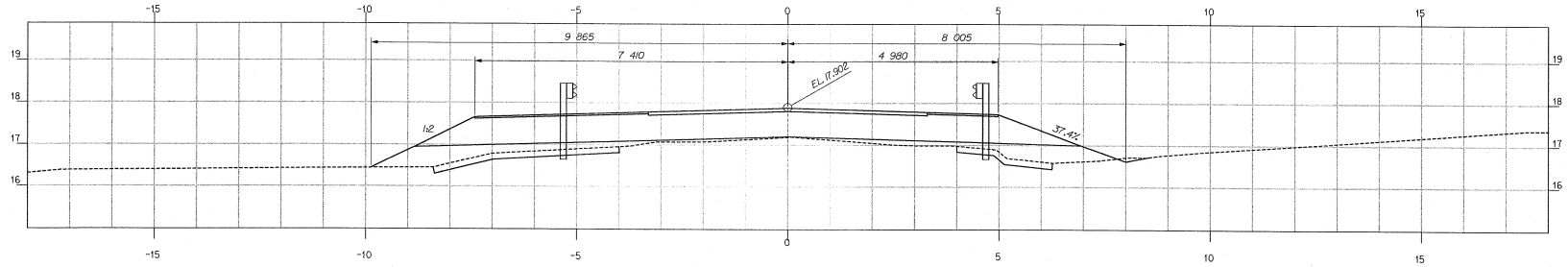

Sta 2 + 47.63 To 2 + 59.26 ±
Install MELT

2+050.000

REVISIONS
1 Rev. Mar. 10, 2004

STA. 2+050 TO STA. 2+069

WHITNEYVILLE

U.S. ROUTE 1A

PROJECT DESIGN ENGINEER		BY	DATE
PLANS	DESIGN-DETAILED	Asif Iqbal	Gary Keene
	CHECKED		
	RECOMMEND		
	FIELD CHANGES		

Filename: ...\00\BRIDGE\WSTA\008_Xsect.dgn Division: BRIDGE Username: asif.iqbal Date:3/10/2004

METRIC	1. All dimensions are in millimeters unless otherwise noted. 2. All elevations and stations are in meters.	F.H.W.A. REG. NO.	STATE	PROJECT NUMBER	SHEET NO.	TOTAL SHEETS
		1	MAINE	STP-8960(00)X	14	25

008960.00

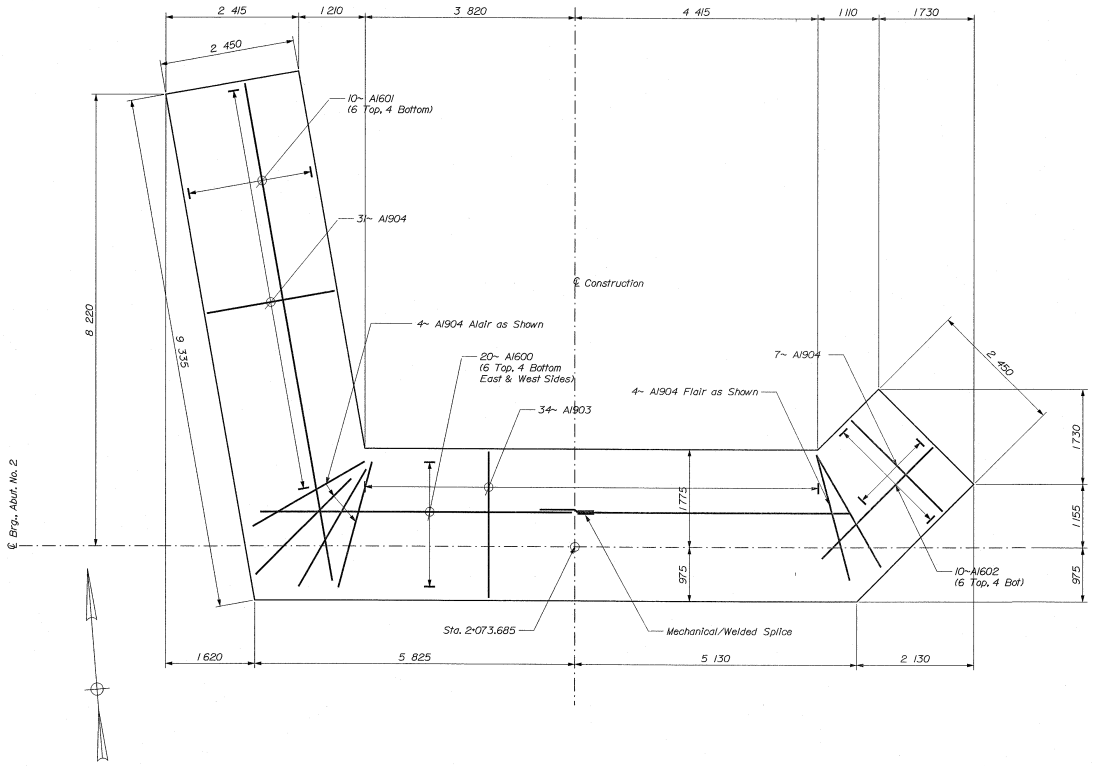

ABUTMENT NOTES

1. Reinforcing steel shall have 50 mm cover in the walls and 75 mm cover in the footings unless otherwise noted.
2. Cover joints in accordance with Standard Detail 502(01) where waterstops are not required.
3. Place 100 mm diameter drains in breastwall and wings at XX mm maximum spacing. Exact location to be determined by the Resident.
4. Construct French drains behind the abutments and wings in accordance with Standard Specification Section 512, French Drains.
5. Structural Earth Excavation, Abutments and Retaining Walls, required below Elevation XX will be paid for at 1.5 times the contract unit price for Item 206.082, Structural Earth Excavation.
6. Abutments and wings shall be backfilled with granular borrow. Pay limits will be the structural excavation limits in cut areas and a vertical plane located 3 m behind the walls in fill areas.
7. Maximum calculated footing pressure is 293 kPa.
8. Footings shall be a minimum of 600 mm thick. If the footing thickness exceeds 1500 mm, notify Construction Manager before proceeding with the affected work.
9. The foundation bearing areas should be approximately level, suitably benched or serrated. Ledge shall be benched if slope exceeds 4:1 perpendicular to the face of the wing and breastwall. Any irregularities in the existing bedrock surface or irregularities created during the excavation process should be backfilled with unreinforced concrete to the bearing elevation. Footings may be stepped to account for varying depths to ledge along the centerline of bearing. Steps shall be excavated to sound rock, cut square and levelled. The bearing surfaces should be free of loose soil, ponded water, and debris prior to constructing the footings. e.

BRIDGE NO. 2217

STATE OF MAINE
DEPARTMENT OF TRANSPORTATION

DAN HILL BRIDGE
OVER
DAN HILL STREAM
IN THE TOWN OF
WHITNEYVILLE
WASHINGTON COUNTY

ABUT. NO. 2 FOOTING

SHEET OF AUGUSTA, MAINE

PROJECT DESIGN ENGINEER		BY	DATE
PLANS	DESIGN-DETAILED	Asif Iqbal	Gary Keene
	CHECKED		
	REVISED		
	FIELD CHANGES		

Filename: ...\BRIDGE\MSTA\014_Abut2-Fig.dgn Division: BRIDGE Username: asif.iqbal Date:3/10/2004

METRIC	1. All dimensions are in millimeters unless otherwise noted. 2. All elevations and stations are in meters.	F.H.W.A. REG. NO.	STATE	PROJECT NUMBER	SHEET NO.	TOTAL SHEETS
		1	MAINE	STP-8960(000)X	17	25

008960.00

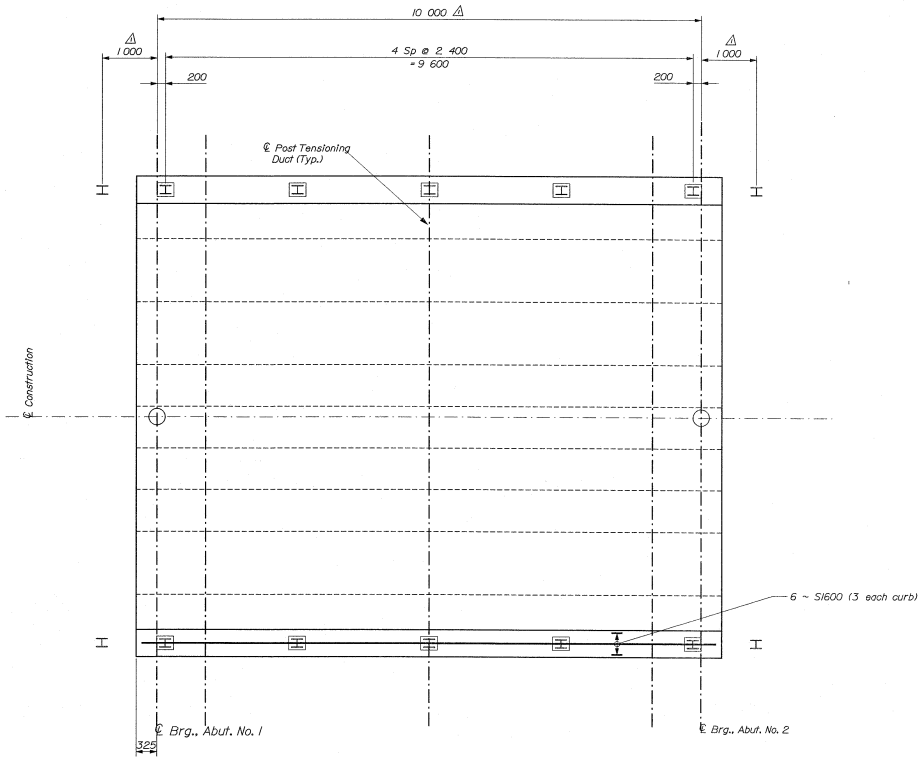

SUPERSTRUCTURE PLAN △

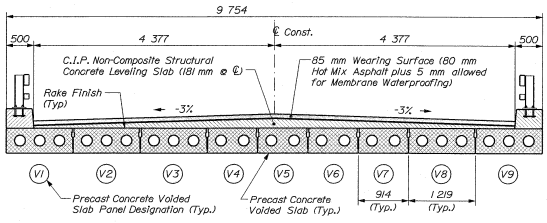

Transverse Section

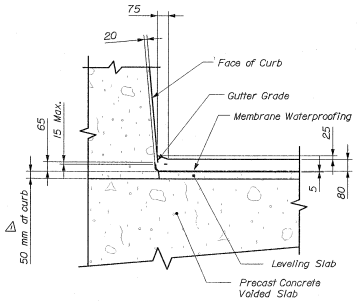

DETAIL AT GUTTER

SUPERSTRUCTURE NOTES

1. Reinforcing steel shall have a 50 mm min. cover unless otherwise noted.
2. Unless otherwise noted, reinforcing steel not embedded or anchored in precast concrete slabs will be paid for under the appropriate reinforcing steel pay items.
3. Form a 30 mm V-groove on the fascias at the horizontal joint between the curb and precast slab.
4. The surface of the precast concrete slabs and the face of the curb shall be cleaned and bonding grout applied prior to placement of the leveling slab in accordance with subsection 502.11(g) of the Supplemental Specifications. Payment will be considered incidental to contract items.
5. The concrete leveling slab shall be paid for under item 502.25, Structural Concrete Leveling Slab.
6. Protective coating for concrete surfaces shall be applied to all exposed areas of curbs and fascia down to the drip notch.
7. After the precast slabs have been placed and post tensioned, drill for and anchor dowels into the bridge seat. Fill sleeves at abutment No. 1 with the same material used to anchor the dowels to within 50 mm of the top of the precast unit and cap with an approved self leveling caulk. At Abutment No. 2, fill the bottom 75 mm of the sleeves with an approved self leveling caulk using an approved device capable of delivering the caulk to the lowest portion of the hole. Then fill the hole to within 50 mm of the top with asphalt material meeting the requirements of Subsection 702.09 and cap with an approved self leveling caulk. The sleeves of Abutment No. 2 may be filled to full depth with an approved self leveling caulk.
8. Concrete leveling slab and curbs shall be placed after the transverse ties have been fully tensioned.
9. Neoprene pads shall be either polychloroprene or natural polyisoprene of 50 ± 5 Shore A durometer hardness and shall conform to the requirements of Division 2, section 18.2 of AASHTO Standard Specifications for Highway Bridges. Neoprene pads shall cover the entire surface of the slab bearing area. Payment will be Considered Incidental to related contract items.
10. The curbs shall be constructed of Low Permeability Concrete. The Curbs shall be paid for under item 502.49, Structural Concrete Curbs and Sidewalks.

PRESTRESSED SLAB NOTES

△ 1. The minimum 28 day compressive strength shall be 45 MPa.
△ 2. No prestress shall be transferred to the concrete until it has attained a compressive strength of at least 30 MPa.
3. All prestressing strands shall be 12.7 mm diameter AASHTO M203 (ASTM A416) Grade 1860 low relaxation strands.
4. Tensioning of preastressing strands shall be done in accordance with Supplemental Specifications Section 535. The jacking force applied to the prestressing strands shall be 138 kN.
5. Install a 25 mm diameter non-metallic drain in the bottom of each void at the ends.
6. Longitudinal slab panel dimensions are horizontal.
7. The top surface of the precast voided slabs shall be intentionally roughened with a raked finish (5mm max. depth).
8. The drilling of holes in the prestressed beams and the use of power actuated tools on the beams will not be permitted.

POST-TENSIONING NOTES

1. After all beams have been erected, tension each transverse tie to 22 kN.
2. Fill all keyways with an MDOT-approved non-shrink grout. If the keyways are not filled within five days after the beams are erected, the Contractor shall cover and protect the keyways from the weather and debris until they are filled.
3. After the mortar has cured, tension each transverse tie to 129 kN. No traffic or heavy equipment will be permitted on the beams until all ties have been properly tensioned.
4. Post tensioning strands shall be covered by a seamless polypropylene sheath for the full length of the strand except at the anchorage location. There shall be a corrosion inhibiting grease between the strand and sheath.
5. The non-shrink grout used for the exterior pockets shall be of the same color and texture as the voided slab concrete.

△ Eliminated Gutter Elevation Table.

PROJECT DESIGN ENGINEER	BY:	DATE
DESIGN-DETAILED: Asif Iqbal	Gary Keene	
CHECKED:		
REVISIONS:		
FIELD CHANGES:		

PLANS

BRIDGE NO. 2217

STATE OF MAINE
DEPARTMENT OF TRANSPORTATION

DAN HILL BRIDGE
OVER
DAN HILL STREAM
IN THE TOWN OF
WHITNEYVILLE
WASHINGTON COUNTY

PLAN

SHEET OF

AUGUSTA, MAINE

REVISIONS
△ Rev. Mar. 10, 2004

Filename: ...\00\BRIDGE\MSTA\017_Precast.dgn Division: BRIDGE Username: asif.iqbal Date:3/10/2004

METRIC	1. All dimensions are in millimeters unless otherwise noted. 2. All elevations and stations are in meters.

F.H.W.A. REG. NO.	STATE	PROJECT NUMBER	SHEET NO.	TOTAL SHEETS
1	MAINE	STP-8960(100)X	18	25

008960.00

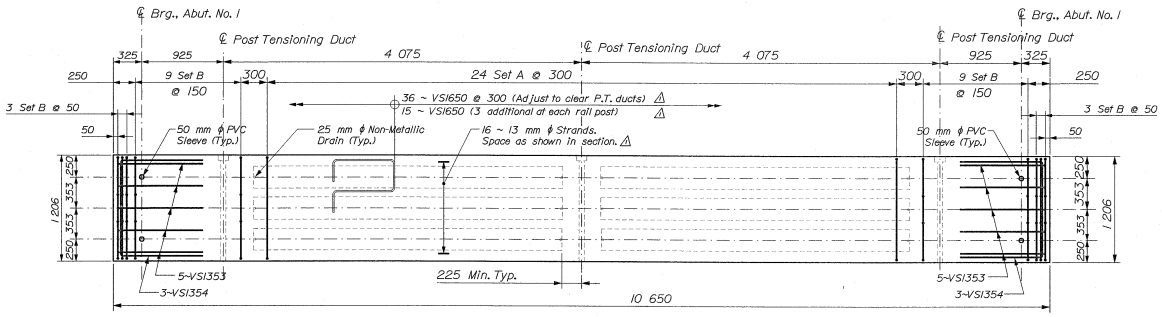

PRECAST CONCRETE VOIDED SLAB
PANEL VI PLAN

REINFORCING STEEL SETS	
SET	DESCRIPTION
A	1-VSI350, 1-VSI351
B	1-VSI350, 1-VSI351, 2-VSI352

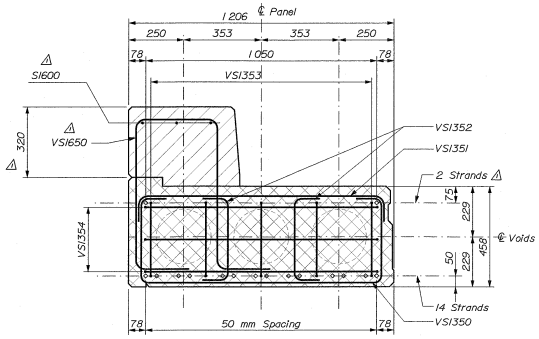

TYPICAL END-SPAN SECTION
PANELS VI

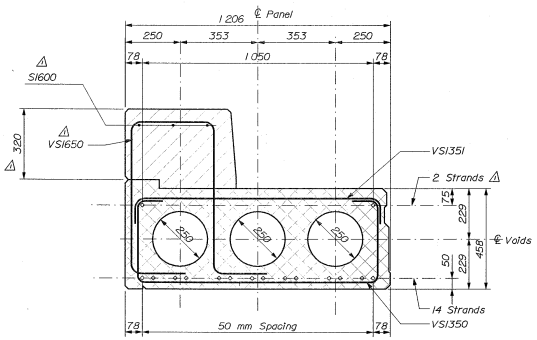

TYPICAL SECTION
PANEL VI

Precast Rebar Schedule △

Mark	Beam	Length	# Per Beam	Total Count	Description
VSI350	VI-V3, V5-V7	2 075	52	312	Bottom Stirrup Set A, B
VSI351	VI-V3, V5-V7	1 325	52	312	Top Stirrup Set A, B
VSI352	VI-V3, V5-V7	600	48	288	Center Stirrup Set B
VSI352	V4		24	24	Center Stirrup Set D
VSI353	VI-V3, V5-V7	2 350	10	60	End of Panel
VSI353	V4		8	8	End of Panel
VSI354	VI-V3, V5-V7	3 075	6	36	End of Panel
VSI355	V4	1 775	52	52	Bottom Stirrup Set C, D
VSI356	V4	1 025	52	52	Top Stirrup Set C, D
VSI357	V4	2 775	6	6	End of Panel
VSI650	VI, V7	2 175	77	144	Curb

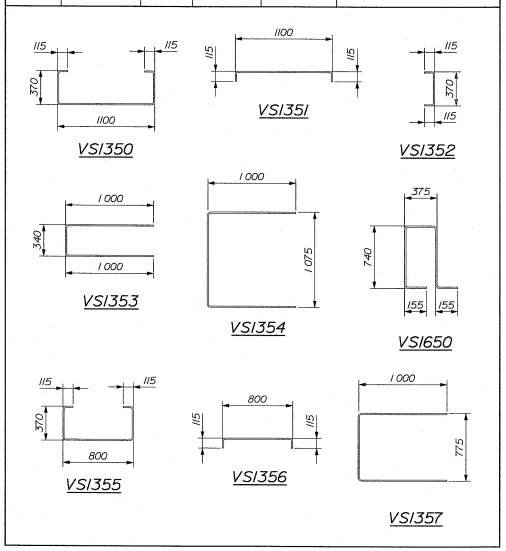

First digit(s) following the letter of the mark indicates size of the bar.

All dimensions are out to out of reinforcing bar.

Bending details and hooks shall conform to the recommendations of the current revision of ACI Standard 318.

Reinforcing Bar: ASTM A615M Grade 420.

BRIDGE NO. 2217

STATE OF MAINE
DEPARTMENT OF TRANSPORTATION

DAN HILL BRIDGE
OVER
DAN HILL STREAM
IN THE TOWN OF
WHITNEYVILLE
WASHINGTON COUNTY

PRECAST VOIDED SLAB

SHEET OF AUGUSTA, MAINE

REVISIONS
△ Rev. Mar. 10, 2004

PROJECT DESIGN ENGINEER	BY	DATE
DESIGN-DETAILED	Karl Ripal	
CHECKED	Gary Keene	
REVISIONS		
FIELD CHANGES		

PLANS

Filename: ...\BRIDGE\MSTA\018_Precast V1.dgn Division: BRIDGE Username: asif.iqbal Date:3/10/2004

METRIC	1. All dimensions are in millimeters unless otherwise noted. 2. All elevations and stations are in meters.	F.H.W.A. REG. NO.	STATE	PROJECT NUMBER	SHEET NO.	TOTAL SHEETS
		1	MAINE	STP-8960(X00)X	19	25

008960.00

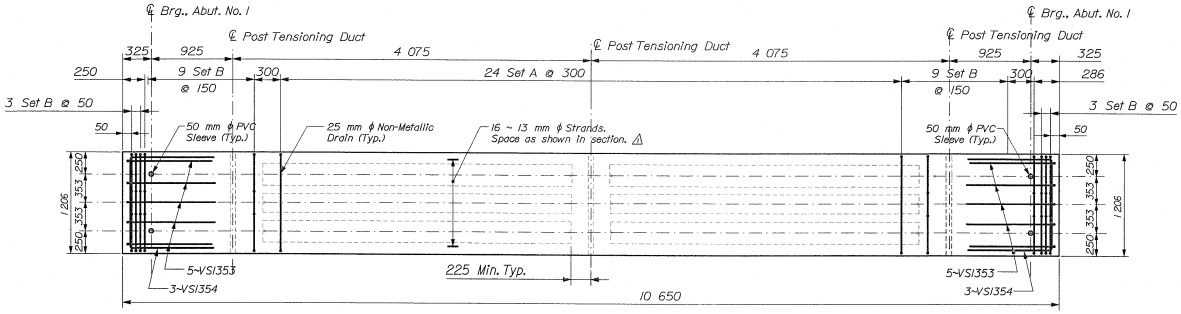

PRECAST CONCRETE VOIDED SLAB
PANEL V2, V3, PLAN

REINFORCING STEEL SETS	
SET	DESCRIPTION
A	1-VS1350, 1-VS1351
B	1-VS1350, 1-VS1351, 2-VS1352

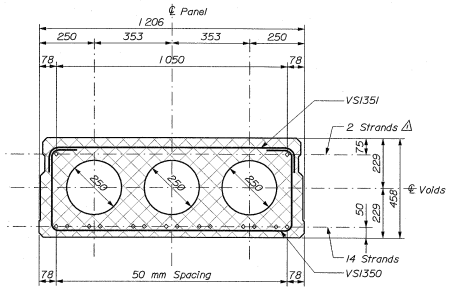

TYPICAL SECTION
PANELS V2 & V3

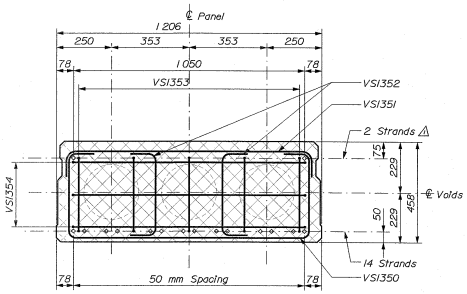

TYPICAL END-SPAN SECTION
PANELS V2 & V3

BRIDGE NO. 2217

STATE OF MAINE
DEPARTMENT OF TRANSPORTATION

DAN HILL BRIDGE
OVER
DAN HILL STREAM
IN THE TOWN OF
WHITNEYVILLE
WASHINGTON COUNTY

PRECAST VOIDED SLAB

SHEET OF AUGUSTA, MAINE

REVISIONS
△ Rev. Mar. 10, 2004

PROJECT DESIGN ENGINEER		BY	DATE
PLANS	DESIGN-DETAILED	Asif Iqbal	Gary Keene
	CHECKED		
	REVISIONS		
	FIELD CHANGES		

Filename: ...\MSTA\019_Precast V2 V3.dgn Division: BRIDGE Username: asif.iqbal Date:3/10/2004

METRIC	1. All dimensions are in millimeters unless otherwise noted. 2. All elevations and stations are in meters.	F.H.W.A. REG. NO.	STATE	PROJECT NUMBER	SHEET NO.	TOTAL SHEETS
		1	MAINE	STP-8960(100)X	20	25

008960.00

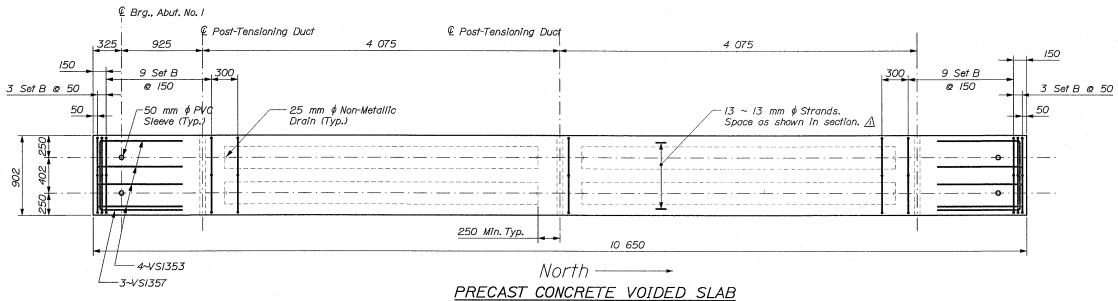

PRECAST CONCRETE VOIDED SLAB
PANEL V4 & V5 PLAN

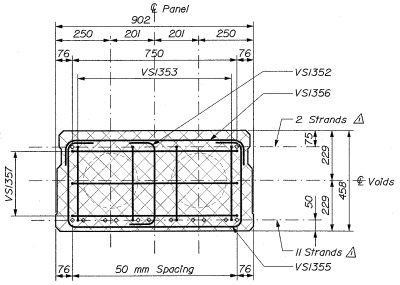

TYPICAL END-SPAN SECTION
PANEL V4 & V5

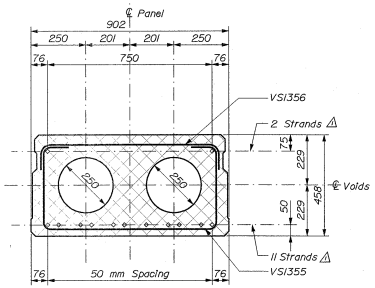

TYPICAL SECTION
PANEL V4 & V5

BRIDGE NO. 2217

STATE OF MAINE
DEPARTMENT OF TRANSPORTATION

DAN HILL BRIDGE
OVER
DAN HILL STREAM
IN THE TOWN OF
WHITNEYVILLE
WASHINGTON COUNTY

PRECAST VOIDED SLAB

SHEET OF AUGUSTA, MAINE

REVISIONS
△1 Rev. Mar. 10, 2004

PROJECT DESIGN ENGINEER		BY	DATE
PLANS	DESIGN-DETAILED	Asif Iqbal	Gary Kamm	
	CHECKED			
	REVISIONS			
	FIELD CHANGES			

Filename: ...\MSTA\020_Precast V4 V5.dgn Division: BRIDGE Username: asif.iqbal Date:3/10/2004

METRIC	1. All dimensions are in millimeters unless otherwise noted. 2. All elevations and stations are in meters.	F.H.W.A. REG. NO.	STATE	PROJECT NUMBER	SHEET NO.	TOTAL SHEETS
		1	MAINE	STP-8960(00)X	21	25

008960.00

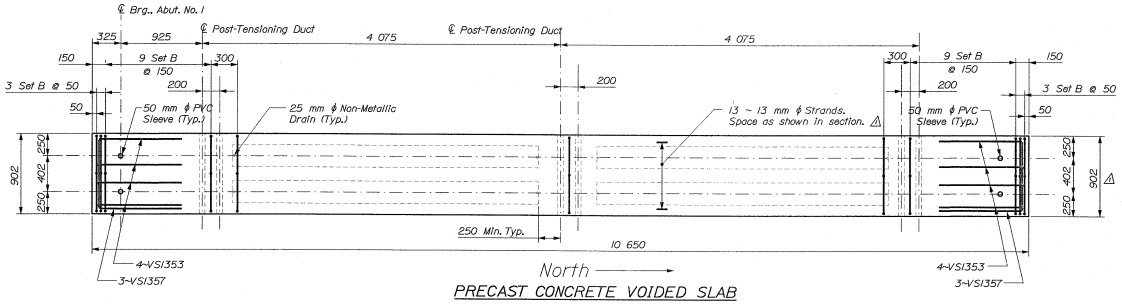

PRECAST CONCRETE VOIDED SLAB
PANEL V6 & V7 PLAN

REINFORCING STEEL SETS	
SET	DESCRIPTION
A	1-VS1355, 1-VS1356
B	1-VS1355, 1-VS1356, 1-VS1352

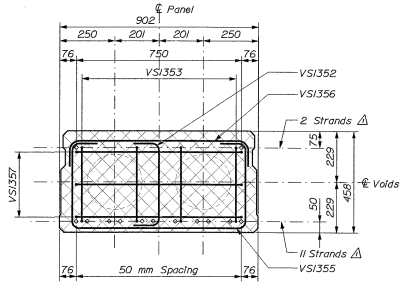

TYPICAL END-SPAN SECTION
PANEL V6 & V7

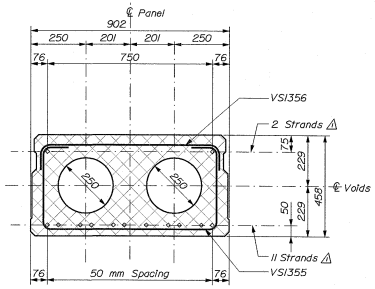

TYPICAL SECTION
PANEL V6 & V7

REVISIONS
△ Rev. Mar. 10, 2004

BRIDGE NO. 2217

STATE OF MAINE
DEPARTMENT OF TRANSPORTATION

DAN HILL BRIDGE
OVER
DAN HILL STREAM
IN THE TOWN OF
WHITNEYVILLE
WASHINGTON COUNTY

PRECAST VOIDED SLAB

SHEET OF AUGUSTA, MAINE

PROJECT DESIGN ENGINEER		BY:	DATE
PLANS	DESIGN-DETAILED	Asif Iqbal	Gary Keene
	CHECKED		
	REVISIONS		
	FIELD CHANGES		

Filename: ...\MSTA\021_Precast V6 V7.dgn Division: BRIDGE Username: asif.iqbal Date:3/10/2004

METRIC	1. All dimensions are in millimeters unless otherwise noted. 2. All elevations and stations are in meters.

F.H.W.A. REG. NO.	STATE	PROJECT NUMBER	SHEET NO.	TOTAL SHEETS
22	MAINE	STP-8960(00)X	22	25

008960.00

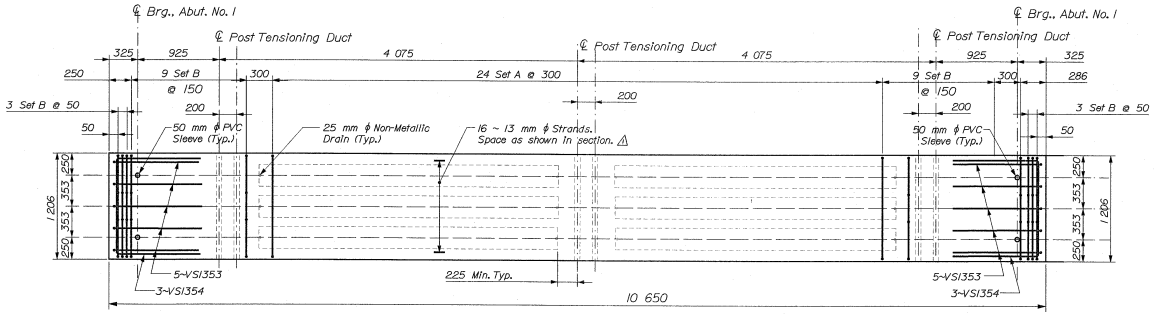

PRECAST CONCRETE VOIDED SLAB
PANEL V8 PLAN

REINFORCING STEEL SETS	
SET	DESCRIPTION
A	1-VSI350, 1-VSI351
B	1-VSI350, 1-VSI351, 2-VSI352

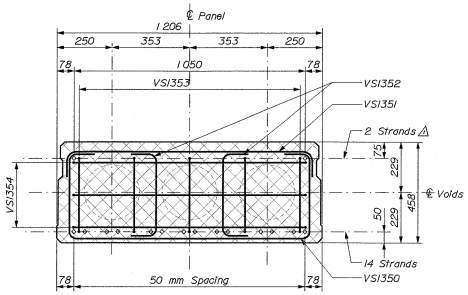

TYPICAL END-SPAN SECTION
PANEL V8

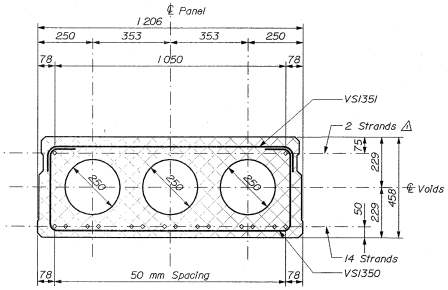

TYPICAL SECTION
PANEL V8

PROJECT DESIGN ENGINEER	Asif Iqbal	BY	Gary Keene	DATE
DESIGN-DETAILED				
CHECKED				
REVISIONS				
FIELD CHANGES				

PLANS

Filename: ...\BRIDGE\MSTA\022_Precast V8.dgn Division: BRIDGE Username: asif.iqbal Date:3/10/2004

BRIDGE NO. 2217

STATE OF MAINE
DEPARTMENT OF TRANSPORTATION

DAN HILL BRIDGE
OVER
DAN HILL STREAM
IN THE TOWN OF
WHITNEYVILLE
WASHINGTON COUNTY

PRECAST VOIDED SLAB

SHEET OF AUGUSTA, MAINE

REVISIONS
△ Rev. Mar. 10, 2004

METRIC	1. All dimensions are in millimeters unless otherwise noted. 2. All elevations and stations are in meters.

F.H.W.A. REG. NO.	STATE	PROJECT NUMBER	SHEET NO.	TOTAL SHEETS
1	MAINE	STP-8960(000)X	23	25

008960.00

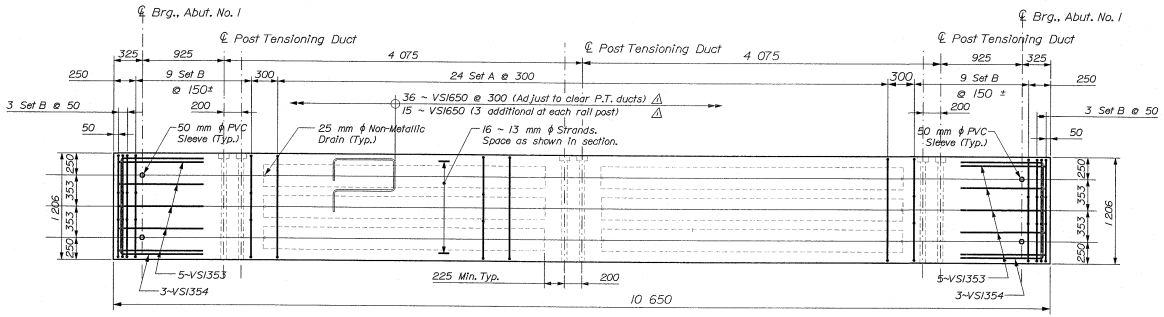

PRECAST CONCRETE VOIDED SLAB
PANEL V9 PLAN

REINFORCING STEEL SETS	
SET	DESCRIPTION
A	1-VS1350, 1-VS1351
B	1-VS1350, 1-VS1351, 2-VS1352

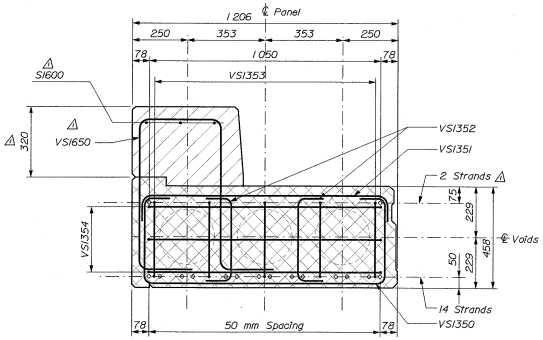

TYPICAL END-SPAN SECTION
PANEL V9

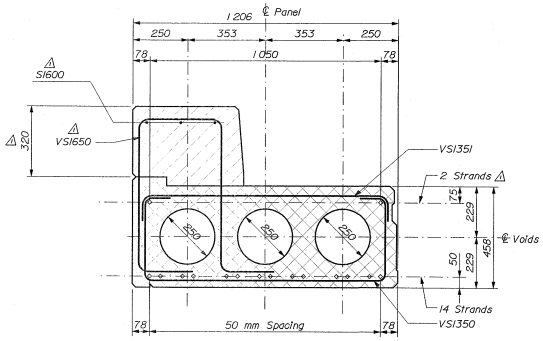

TYPICAL SECTION
PANEL V9

BRIDGE NO. 2217

STATE OF MAINE
DEPARTMENT OF TRANSPORTATION

DAN HILL BRIDGE
OVER
DAN HILL STREAM
IN THE TOWN OF
WHITNEYVILLE
WASHINGTON COUNTY

PRECAST VOIDED SLAB

SHEET 2 OF 3

AUGUSTA, MAINE

REVISIONS
△ Rev. Mar. 10, 2004

Filename: ...\BRIDGE\MSTA\023_Precast V9.dgn Division: BRIDGE Username: asif.iqbal Date:3/10/2004

PROJECT DESIGN ENGINEER	Asif Iqbal	BY	Gary Keene	DATE
DESIGN-DETAILED				
CHECKED				
REVISIONS				
FIELD CHANGES				

PLANS

REINFORCING STEEL SCHEDULE

METRIC 1. All dimensions are in millimeters unless otherwise noted.
2. All elevations and stations are in meters.

F.H.W.A. REG. NO.	STATE	PROJECT NUMBER	SHEET NO.	TOTAL SHEETS
1	MAINE	STP-8960(00)X	24	25

008960.00

STRAIGHT BARS

	Mark	Qty	Length (m)	Location
	Abutment #1 Footing			
A	1600	10	5.720	Long. Middle- East Side
A	1601	9	4.960	Long. East Wall
A	1602	9	3.460	Long. West Wall
A	1605	10	5.000	Long. Middle- West Side
A	1606	67	1.100	Dowel- Footing to Wall
A	1903	35	2.650	Transverse Middle
A	1904	25	2.350	Trans. East and West Wall
A	1612	78	3.425	Vertical Breastwall E.F.
	Abutment #1 East Wing Wall			
A	1620	2	2.800	Vertical EF
A	1621	2	2.885	Vertical EF
A	1622	2	2.970	Vertical EF
A	1623	2	3.055	Vertical EF
A	1624	2	3.140	Vertical EF
A	1625	2	3.225	Vertical EF
A	1626	2	3.310	Vertical EF
A	1627	2	3.395	Vertical EF
A	1628	2	3.480	Vertical EF
A	1629	2	3.565	Vertical EF
A	1630	2	3.650	Vertical EF
A	1631	2	3.735	Vertical EF
A	1632	2	3.820	Vertical EF
A	1633	2	3.905	Vertical EF
A	1634	2	3.990	Vertical EF
A	1635	2	4.075	Vertical EF
A	1636	2	4.160	Vertical EF
A	1637	6	4.215	Vert. 1-FF, 2 NF-- E & W Crs
A	1638	14	4.510	Horizontal EF
A	1639	2	2.970	Horizontal EF
A	1640	2	1.805	Horizontal EF
A	1641	2	0.535	Horizontal EF
A	1642	2	4.280	Top of Wall, EF
	Abutment #1 West Wing Wall			
A	1650	2	2.790	Vertical EF
A	1651	2	2.930	Vertical EF
A	1652	2	3.070	Vertical EF
A	1653	2	3.210	Vertical EF
A	1654	2	3.350	Vertical EF
A	1655	2	3.490	Vertical EF
A	1656	2	3.630	Vertical EF
A	1657	2	3.770	Vertical EF
A	1658	2	3.910	Vertical EF
A	1659	2	4.050	Vertical EF
A	1660	3	4.080	Verticle EF
A	1661	14	3.010	Horizonal EF
A	1662	2	2.315	Horizonal EF
A	1663	2	1.350	Horizonal EF
A	1664	2	0.555	Horizonal EF
A	1665	2	2.870	Top of Wall, EF
	Superstructure			
S	1600	6	10.500	Curbs

STRAIGHT BARS

	Mark	Qty	Length (m)	Location
	Abutment #2 Footing			
B	1600	20	5.670	Longitudinal Middle
B	1601	10	9.185	Longitudinal West Wall
B	1602	10	9.185	Longitudinal East Wall
B	1903	34	9.185	Transverse Middle
B	1904	46	2.860	Transv. Wings and Corners.
B	1613	77	1.100	Dowel to Wall
B	1615	66	3.425	Vertical
	Abutment #2 East Wing Wall			
B	1660	2	0.045	Vertical 1 E.F.
B	1661	2	2.795	Vertical 1 E.F.
B	1662	2	2.840	Vertical 1 E.F.
B	1663	2	2.885	Vertical 1 E.F.
B	1664	2	2.930	Vertical 1 E.F.
B	1665	2	2.975	Vertical 1 E.F.
B	1666	2	3.020	Vertical 1 E.F.
B	1667	2	3.060	Vertical 1 E.F.
B	1668	2	3.105	Vertical 1 E.F.
B	1669	2	3.150	Vertical 1 E.F.
B	1670	2	3.195	Vertical 1 E.F.
B	1671	3	3.240	Vertical 1 F.F., 2 N.F.
B	1672	2	3.285	Horizontal 1 E.F.
B	1673	2	3.325	Horizontal 1 E.F.
B	1674	2	3.370	Horizontal 1 E.F.
B	1675	2	3.415	Horizontal 1 E.F.
B	1676	2	3.460	Horizontal 1 E.F.
B	1677	2	3.505	Top of Wall 1 E.F.
B	1637	2	3.550	Vertical
B	1638	2	3.590	Vertical
B	1639	2	3.635	Vertical
B	1640	2	3.680	Vertical
B	1641	2	3.725	Vertical
B	1642	2	3.770	Vertical
B	1643	2	3.810	Vertical
B	1644	2	3.855	Vertical
B	1645	2	3.900	Vertical
B	1646	2	3.945	Vertical
B	1647	2	3.990	Vertical
B	1648	2	4.035	Vertical
B	1649	2	4.075	Vertical
B	1650	2	4.120	Vertical
B	1651	2	4.165	Vertical
B	1652	2	4.210	Vertical
B	1653	3	4.255	Vertical 1 F.F., 2 N.F.
B	1654	18	8.305	Transverse Wing Wall 1 EF
B	1655	2	6.630	Transverse Wing Wall 1 EF
B	1656	2	4.935	Transverse Wing Wall 1 EF
B	1657	2	3.235	Transverse Wing Wall 1 EF
B	1658	2	1.540	Transverse Wing Wall 1 EF
B	1658	2	8.075	Top of Wing Wall 1 EF
	Abutment #2 East Wing Wall			
B	1660	2	2.810	Vertical 1 E.F.
B	1661	2	2.855	Vertical 1 E.F.
B	1662	2	2.895	Vertical 1 E.F.
B	1663	2	2.940	Vertical 1 E.F.
B	1664	2	2.985	Vertical 1 E.F.
B	1665	2	3.030	Vertical 1 E.F.
B	1666	2	3.075	Vertical 1 E.F.
B	1667	2	3.120	Vertical 1 E.F.
B	1668	2	3.160	Vertical 1 E.F.
B	1669	2	3.205	Vertical 1 E.F.
B	1670	2	3.250	Vertical 1 E.F.
B	1671	3	3.295	Vertical 1 F.F., 2 N.F.
B	1672	20	2.880	Horizontal 1 E.F.
B	1673	2	2.380	Horizontal 1 E.F.
B	1674	2	1.880	Horizontal 1 E.F.
B	1675	2	1.350	Horizontal 1 E.F.
B	1676	2	0.820	Horizontal 1 E.F.
B	1677	2	2.845	Top of Wall 1 E.F.

Bent Bars

	Mark	Qty	Lngth	Type	A	B	C	D	E	F	G	H	O	R	Location
	Abutment #1 Footing														
A	1907	67	3.150	L	1.900	1.250									Footing- Walls and Breastwall
	Abutment #1														
A	1610	8	7.520	V				6.320	1.200			0.850			Long. East Side NF
A	1611	8	7.345	V				6.145	1.200			0.850			Long. East Side FF
A	1612	8	6.135	V				4.935	1.200			0.850			Long. West Side FF
A	1613	8	5.960	V				4.760	1.200			0.850			Long. West Side NF
A	1614	22	2.400	V				1.200	1.200			0.850			Corner Bar- East & West FF
A	1616	57	1.750	S		0.550	0.650	0.550							Top of Wall
	Mark	**Qty**	**Lngth**	**Type**	**A**	**B**	**C**	**D**	**E**	**F**	**G**	**H**	**O**	**R**	**Location**
	Abutment #2 Footing														
B	1907	67	3.425	L	1.900	1.250									Footing- Walls and Breastwall
	Abutment #2														
B	1610	11	6.295	V				5.655	0.640	45		0.455			Long. East Side FF
B	1611	11	6.110	V				5.470	0.640	45		0.455			Long. East Side NF
B	1612	11	5.625	V				4.985	0.640	80		0.630			Long. West Side NF
B	1613	11	5.860	V				5.220	0.640	80		0.630			Long. West Side NF
B	1616	57	1.750	S		0.550	0.650	0.550							

TYPE - BENDING DIAGRAMS

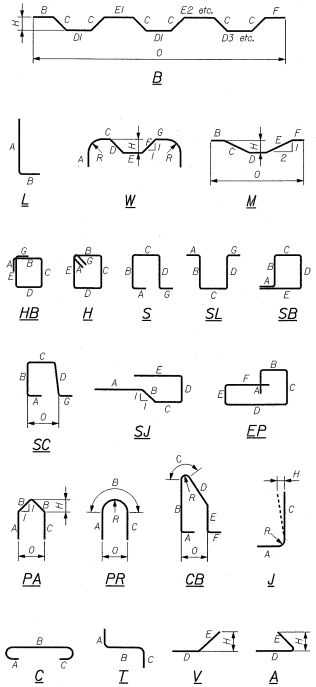

All dimensions are out-to-out of bar.

Bending details and hooks shall conform to the recommendations of the current revision of ACI Standard 318.

Reinforcing Bar: ASTM A615/A615M, Grade 420

GENERAL NOTES

1. The first two digits following the letter(s) of the mark indicate the size of the bar:

   Mark "A1602" = bar size #16
   Mark "P2501" = bar size #25
   Mark "S1950" = bar size #19

2. Each crank bar, Type B, may be replaced by two (2) straight bars (one top and one bottom) of the same bar size as the crank bar. Payment in either case shall be based on crank bars as schedule on the plans.

BRIDGE NO. 2217

STATE OF MAINE
DEPARTMENT OF TRANSPORTATION

DAN HILL BRIDGE
OVER
DAN HILL STREAM
IN THE TOWN OF
WHITNEYVILLE
WASHINGTON COUNTY

Reinforcing Steel Schedule

(****)

SHEET OF AUGUSTA, MAINE

PROJECT DESIGN ENGINEER	BY	DATE
DESIGN DETAILED: Asif Iqbal	Gary Keene	
CHECKED		
REVISIONS		
FIELD CHANGES		

PLANS

Filename: ...\00\BRIDGE\MSTA\024_Rebar.dgn Division: BRIDGE Username: asif.iqbal Date-3/10/2004