STATE OF MAINE
DEPARTMENT OF TRANSPORTATION
16 STATE HOUSE STATION
AUGUSTA, MAINE
04333-0016

JOHN ELIAS BALDACCI
GOVERNOR

DAVID A. COLE
COMMISSIONER

April 16, 2004
Subject: Harrison
Project No. STP-8473(00)X
PIN 8473.00
Bid Amendment No. 1

Dear Sir/Ms.:

Please make the following changes to your bid package:

Delete in its entirety the "Schedule of Items" dated 040326; twelve pages total and replace with the attached "Schedule of Items" dated 040416; twelve pages total.

Add the attached one page, entitled "Special Provision Section 203 Excavation and Embankment (Dredge Materials) dated 12 April 2004.

Add the attached one page; entitled "Special Provision Section 606 Guardrail (Anchorage Assembly)" dated April 9, 2004.

Add the attached Detail sheets entitled "Harrison Pedestrian Access Gaps" three pages total.

Please make the following changes to the Plan Sheets:

On plan sheet number 3 of 262 entitled "Earthwork & Quantity Sheet" under the "Estimated Quantities" Remove Item 606.266 Terminal End – Single Rail Corrosion Resistant Steel with a quantity of 54 units each and replace with Item 606.259 Anchorage Assembly with a quantity of 54 units each. Refer to the attached Special Provision and Detail Sheets.

On plan sheet number 3 of 262 entitled "Earthwork & Quantity Sheet" under the "Estimated Quantities" for Item 606.151 "Guardrail Type 3aa – Single Rail" delete the quantity of 1850 m and replace with a quantity of 1644m. The 206 m difference will be paid for under Item 606.259 Anchorage Assembly. See attached Special Provision and Detail Sheets.

PRINTED ON RECYCLED PAPER

THE MAINE DEPARTMENT OF TRANSPORTATION IS AN AFFIRMATIVE ACTION - EQUAL OPPORTUNITY EMPLOYER

On plan sheet number 3 of 262 entitled "Earthwork & Quantity Sheet" under the "Estimated Quantities" Delete Item 606.21 "Guardrail Type 3b – 4.5 m Radius or less" with a quantity of 18 m, and replace with Item 606.231 "Guardrail Type 3c 4.5 m Radius or less" and a quantity of 18 m.

The Department has received the following Request for Information:

1)Q: We would like to get the Cuts and Fills report per Station for the Harrison project that bids on April 21, 2004 - they are not shown on the plan cross sections like the normally are.

1) A: Cut and fill report is provided in this addendum.

2)Q: - The plan notes on sheet 3 #15 call for 606.369 that item is missing from the schedule of items.

2) A: Note 15 should say item 606.363, same as note 16.

3) Q: In the plans calls for MELTS, in schedule of items calls for 350's which item is wanted?

3) A: All items are 350s, no MELTS

4) Q: What type of fence is to be removed and reset? Is the fence set in concrete?

4) A: Split rail, chain link, privacy, and picket. Assume some are set in concrete.

5) Q: Can Corten Steel post be used instead of wood on 3AA rail?

5) A: Yes, but part below ground must be galvanized.

6) Q: 606.21 - Calls for Galv. 3b yes or no?

6 A: yes but type 3c (no metal offset)

7) Q: 606.25 - Galv?

7) A: yes

8) Q: 606.79 - Galv. or corten above ground?

8) A: corten

- *Clarification Item 606.21 & 606.25 should be galvanized*
  Item 606.79 should be Corten, above ground. It is the intent that all above ground steel be corrosion resistant steel (corten). If steel posts are used, the below ground portion must be galvanized. The above ground portion must be corrosion resistant steel.

9) Q: We have been advised that using OPT III pipe for the culvert lining item on the above referenced project is not correct, and the correct pipe would be an HDPE pipe. Can you please let us know if this other method will be acceptable when bidding Item 603.2191 "Liner for 900mm Culvert pipe?"

9) A: *HDPE would be acceptable*

10) Q: Item # 525.62 Boulder retaining wall – bid quantity 180 m2; the plans show one location 12+635 to 12+648.... Where are the other locations and information on the height?

10) A: *The boulder retaining wall is intended for use on 6 steep inlet ditches. Walls will roughly be 1.5m in height, see special provision 525 for detail.*

11) Q: Item 608.45 Construct sidewalks: Where are the locations of this item and details from construction?

11) A: *See plans, and detail sheets. Sidewalks are called out in the plans.*

12) Q: Do all catch basin sump elevations reflect the 900mm that you require?

12) A: *Sumps should be taken from the cross sections. As a rule, the entire job has 900mm sumps. However, there is one area (the Town office to Dawes Hill RD) has standard sumps.*

13) Q: Can we please get a copy of the Geotechnical Report?

13) A: *The Geotechnical report can be requested and a copy picked up at the MDOT office in Augusta.*

14) Q: Where is the culvert to be sliplinned located?

14) A: *Station 11+683 – See notes, Plan Sheet 8*

15) Q: On Plan Sheet 3—notes - What are end caps for type 5 curb?

15) A: *"end caps" are type 5 radius sections.*

16) Q: I can not find single tree removal locations/identification?

16) A: *Single tree removals are identified in the notes on the appropriate plan sheets. (Example: Plan sheet # 2 identifies tree @ STA 10+502 LT)*

17) Q: Who will be the Resident?

17) A: *Resident will be named at a later date (to be determined)*

Consider these changes and this information prior to submitting your bid on April 21, 2004.

Sincerely,

FOR

Scott Bickford
Contracts & Specifications Engineer

CONTRACT ID: 008473.00 PROJECT(S): STP-8473(00)X

CONTRACTOR :_____

LINE NO	ITEM DESCRIPTION	APPROX. QUANTITY AND UNITS	UNIT PRICE DOLLARS	UNIT PRICE CTS	BID AMOUNT DOLLARS	BID AMOUNT CTS
	SECTION 0001 HIGHWAY ITEMS					
0010	201.11 CLEARING	1.100 HA				
0020	201.12 SELECTIVE CLEARING AND THINNING	0.140 HA				
0030	201.23 REMOVING SINGLE TREE TOP ONLY	25.000 EA				
0040	201.24 REMOVING STUMP	25.000 EA				
0050	202.123 SCARIFYING CONCRETE DEC-TOP	LUMP	LUMP			
0060	202.15 REMOVING MANHOLE OR CATCH BASIN	7.000 EA				
0070	202.19 REMOVING EXISTING BRIDGE	LUMP	LUMP			
0080	203.20 COMMON EXCAVATION	33220.000 M3				
0090	203.2312 HEALTH AND SAFETY PLAN	LUMP	LUMP			
0100	203.2333 DISPOSAL OF SPECIAL EXCAVATION	50.000 MG				

CONTRACT ID: 008473.00 PROJECT(S): STP-8473(00)X

CONTRACTOR :_____

LINE NO	ITEM DESCRIPTION	APPROX. QUANTITY AND UNITS	UNIT PRICE DOLLARS	UNIT PRICE CTS	BID AMOUNT DOLLARS	BID AMOUNT CTS
0110	203.25 GRANULAR BORROW	50.000 M3				
0120	206.061 STRUCTURAL EARTH EXCAVATION - DRAINAGE AND MINOR STRUCTURES, BELOW GRADE	50.000 M3				
0130	304.10 AGGREGATE SUBBASE COURSE - GRAVEL	22600.000 M3				
0140	310.23 PLANT MIX RECYCLED ASPHALT PAVEMENT - 75 MM DEPTH	33500.000 M2				
0150	403.207 HOT MIX ASPHALT 19.0 MM NOMINAL MAX SIZE	4900.000 MG				
0160	403.208 HOT MIX ASPHALT 12.5 MM, SURFACE	3850.000 MG				
0170	403.209 HOT MIX ASPHALT 9.5 MM(SIDEWALKS,DRIVES, INCIDENTAL)	1030.000 MG				
0180	409.15 BITUMINOUS TACK COAT APPLIED	6000.000 L				
0190	502.44 STRUCTURAL CONCRETE WEARING SURFACE ON BRIDGES	21.000 M3				
0200	503.12 REINFORCING STEEL, FABRICATED AND DELIVERED	183.000 KG				

CONTRACT ID: 008473.00 PROJECT(S): STP-8473(00)X

CONTRACTOR :_____

LINE NO	ITEM DESCRIPTION	APPROX. QUANTITY AND UNITS	UNIT PRICE DOLLARS	UNIT PRICE CTS	BID AMOUNT DOLLARS	BID AMOUNT CTS
0210	503.13 REINFORCING STEEL, PLACING	183.000 KG				
0220	515.21 PROTECTIVE COATING FOR CONCRETE SURFACES	LUMP	LUMP			
0230	525.325 DRY-LAID STONE RETAINING WALL	43.000 M2				
0240	525.62 BOULDER RETAINING WALL	180.000 M2				
0250	526.323 TEXAS CLASSIC RAIL	LUMP	LUMP			
0260	534.71 PRECAST CONCRETE BOX CULVERT	LUMP	LUMP			
0270	603.159 300 MM CULVERT PIPE OPTION III	32.000 M				
0280	603.16 375 MM CULVERT PIPE OPTION I	19.400 M				
0290	603.169 375 MM CULVERT PIPE OPTION III	38.000 M				
0300	603.17 450 MM CULVERT PIPE OPTION I	10.800 M				
0310	603.179 450 MM CULVERT PIPE OPTION III	195.000 M				

CONTRACT ID: 008473.00 PROJECT(S): STP-8473(00)X

CONTRACTOR :_____

LINE NO	ITEM DESCRIPTION	APPROX. QUANTITY AND UNITS	UNIT PRICE DOLLARS	UNIT PRICE CTS	BID AMOUNT DOLLARS	BID AMOUNT CTS
0320	603.189 525 MM CULVERT PIPE OPTION III	10.000 M				
0330	603.19 600 MM CULVERT PIPE OPTION I	26.000 M				
0340	603.199 600 MM CULVERT PIPE OPTION III	128.000 M				
0350	603.209 750 MM CULVERT PIPE OPTION III	176.000 M				
0360	603.219 900 MM CULVERT PIPE OPTION III	48.000 M				
0370	603.2191 LINER FOR 900 MM CULVERT PIPE	18.000 M				
0380	603.229 1050 MM CULVERT PIPE OPTION III	25.000 M				
0390	604.072 CATCH BASIN TYPE A1-C	44.000 EA				
0400	604.092 CATCH BASIN TYPE B1-C	17.000 EA				
0410	604.15 MANHOLE	4.000 EA				
0420	604.30 SPECIAL CATCH BASIN	17.000 EA				

CONTRACT ID: 008473.00 PROJECT(S): STP-8473(00)X

CONTRACTOR :_____

LINE NO	ITEM DESCRIPTION	APPROX. QUANTITY AND UNITS	UNIT PRICE DOLLARS	UNIT PRICE CTS	BID AMOUNT DOLLARS	BID AMOUNT CTS
0430	605.09 150 MM UNDERDRAIN TYPE B	2510.000 M				
0440	605.10 150 MM UNDERDRAIN OUTLET	156.000 M				
0450	605.11 300 MM UNDERDRAIN TYPE C	380.000 M				
0460	605.12 375 MM UNDERDRAIN TYPE C	295.000 M				
0470	605.13 450 MM UNDERDRAIN TYPE C	255.000 M				
0480	605.15 600 MM UNDERDRAIN TYPE C	118.000 M				
0490	605.17 750 MM UNDERDRAIN TYPE C	118.000 M				
0500	606.151 GUARDRAIL TYPE 3AA - SINGLE RAIL	1644.000 M				
0510	606.231 GUARDRAIL TYPE 3C - 4.5 M RADIUS AND LESS	18.000 M				
0520	606.25 TERMINAL CONNECTOR	4.000 EA				
0530	606.259 ANCHORAGE ASSEMBLY	54.000 EA				

CONTRACT ID: 008473.00 PROJECT(S): STP-8473(00)X

CONTRACTOR :_____

LINE NO	ITEM DESCRIPTION	APPROX. QUANTITY AND UNITS	UNIT PRICE DOLLARS	UNIT PRICE CTS	BID AMOUNT DOLLARS	BID AMOUNT CTS
0540	606.265 TERMINAL END - SINGLE RAIL - GALVANIZED STEEL	4.000 EA				
0550	606.35 GUARDRAIL DELINEATOR POST	28.000 EA				
0560	606.363 GUARDRAIL REMOVE AND DISPOSE	585.000 M				
0570	606.47 SINGLE WOOD POST	25.000 EA				
0580	606.79 GUARDRAIL 350 FLARED TERMINAL	8.000 EA				
0590	607.24 REMOVE AND RESET FENCE	44.000 M				
0600	608.08 REINFORCED CONCRETE SIDEWALK	1840.000 M2				
0610	608.253 MASONRY PAVER WITH TRUNCATED DOME	21.000 M2				
0620	608.45 CONSTRUCTING SIDEWALK	16.000 M2				
0630	609.11 VERTICAL CURB TYPE 1	1460.000 M				
0640	609.12 VERTICAL CURB TYPE 1 - CIRCULAR	210.000 M				

CONTRACT ID: 008473.00 PROJECT(S): STP-8473(00)X

CONTRACTOR :_____

LINE NO	ITEM DESCRIPTION	APPROX. QUANTITY AND UNITS	UNIT PRICE DOLLARS	UNIT PRICE CTS	BID AMOUNT DOLLARS	BID AMOUNT CTS
0650	609.234 TERMINAL CURB TYPE 1 - 1.2 METER	79.000 EA				
0660	609.237 TERMINAL CURB TYPE 1 - 2.1 METER	69.000 EA				
0670	609.31 CURB TYPE 3	1020.000 M				
0680	609.34 CURB TYPE 5	21.000 M				
0690	610.08 PLAIN RIPRAP	450.000 M3				
0700	610.16 HEAVY RIPRAP	120.000 M3				
0710	610.18 STONE DITCH PROTECTION	325.000 M3				
0720	613.319 EROSION CONTROL BLANKET	1500.000 M2				
0730	615.07 LOAM	1750.000 M3				
0740	618.1301 SEEDING METHOD NUMBER 1 - PLAN QUANTITY	76.000 UN				
0750	618.1401 SEEDING METHOD NUMBER 2 - PLAN QUANTITY	44.000 UN				

CONTRACT ID: 008473.00 PROJECT(S): STP-8473(00)X

CONTRACTOR :_____

LINE NO	ITEM DESCRIPTION	APPROX. QUANTITY AND UNITS	UNIT PRICE DOLLARS	UNIT PRICE CTS	BID AMOUNT DOLLARS	BID AMOUNT CTS
0760	618.143 SPECIAL SEED MIX: HARRISON WOODY SEED	148.000 UN				
0770	619.1201 MULCH - PLAN QUANTITY	254.000 UN				
0780	619.1401 EROSION CONTROL MIX	650.000 M3				
0790	620.58 EROSION CONTROL GEOTEXTILE	1200.000 M2				
0800	621.019 EVERGREEN TREES (600 MM - 900 MM) GROUP A	18.000 EA				
0810	621.025 EVERGREEN TREES (900 MM - 1200 MM) GROUP A	12.000 EA				
0820	621.026 EVERGREEN TREES (900 MM - 1200 MM) GROUP B	13.000 EA				
0830	621.031 EVERGREEN TREES (1200 MM - 1500 MM) GROUP A	3.000 EA				
0840	621.032 EVERGREEN TREES (1200 MM - 1500 MM) GROUP B	18.000 EA				
0850	621.038 EVERGREEN TREES (1500 MM - 1800 MM) GROUP B	3.000 EA				
0860	621.045 EVERGREEN TREES (1800 MM - 2400 MM) GROUP C	1.000 EA				

CONTRACT ID: 008473.00 PROJECT(S): STP-8473(00)X

CONTRACTOR :_____

LINE NO	ITEM DESCRIPTION	APPROX. QUANTITY AND UNITS	UNIT PRICE DOLLARS	UNIT PRICE CTS	BID AMOUNT DOLLARS	BID AMOUNT CTS
0870	621.101 PLUG/ STARTER PLANT	1152.000 EA				
0880	621.196 MEDIUM DECIDUOUS TREE (45 MM - 50 MM CALIPER) GROUP B	24.000 EA				
0890	621.273 LARGE DECIDUOUS TREE (50 MM - 65 MM CALIPER) GROUP A	20.000 EA				
0900	621.388 DWARF EVERGREENS (300 MM - 375 MM)	12.000 EA				
0910	621.531 DECIDUOUS SHRUBS (300 MM - 450 MM CALIBER) GROUP A	126.000 EA				
0920	621.54 DECIDUOUS SHRUBS (450 MM - 600 MM) GROUP A	78.000 EA				
0930	621.546 DECIDUOUS SHRUBS (600 MM - 900 MM) GROUP A	30.000 EA				
0940	621.547 DECIDUOUS SHRUBS (600 MM - 900 MM) GROUP B	12.000 EA				
0950	621.558 DECIDUOUS SHRUBS (1200 MM - 1500 MM) GROUP A	12.000 EA				
0960	621.71 HERBACEOUS PERENNIALS GROUP A	180.000 EA				
0970	621.711 HERBACEOUS PERENNIALS GROUP B	120.000 EA				

CONTRACT ID: 008473.00 PROJECT(S): STP-8473(00)X

CONTRACTOR :_____

LINE NO	ITEM DESCRIPTION	APPROX. QUANTITY AND UNITS	UNIT PRICE DOLLARS	UNIT PRICE CTS	BID AMOUNT DOLLARS	BID AMOUNT CTS
0980	621.80 ESTABLISHMENT PERIOD	LUMP	LUMP			
0990	627.711 WHITE OR YELLOW PAINTED PAVEMENT MARKING LINE (PLAN QUANTITY)	13900.000 M				
1000	627.75 WHITE OR YELLOW PAVEMENT AND CURB MARKING	150.000 M2				
1010	627.76 TEMPORARY PAVEMENT MARKING LINE, WHITE OR YELLOW	LUMP	LUMP			
1020	627.811 TEMPORARY BI-DIRECTIONAL YELLOW DELINEATORS	400.000 EA				
1030	629.05 HAND LABOR, STRAIGHT TIME	105.000 HR				
1040	631.10 AIR COMPRESSOR (INCLUDING OPERATOR)	20.000 HR				
1050	631.11 AIR TOOL (INCLUDING OPERATOR)	20.000 HR				
1060	631.12 ALL PURPOSE EXCAVATOR (INCLUDING OPERATOR)	55.000 HR				
1070	631.13 BULLDOZER (INCLUDING OPERATOR)	50.000 HR				
1080	631.14 GRADER (INCLUDING OPERATOR)	40.000 HR				

CONTRACT ID: 008473.00 PROJECT(S): STP-8473(00)X

CONTRACTOR :_____

LINE NO	ITEM DESCRIPTION	APPROX. QUANTITY AND UNITS	UNIT PRICE DOLLARS	UNIT PRICE CTS	BID AMOUNT DOLLARS	BID AMOUNT CTS
1090	631.172 TRUCK - LARGE (INCLUDING OPERATOR)	58.000 HR				
1100	631.18 CHAIN SAW RENTAL (INCLUDING OPERATOR)	20.000 HR				
1110	631.20 STUMP CHIPPER (INCLUDING OPERATOR)	20.000 HR				
1120	631.22 FRONT END LOADER (INCLUDING OPERATOR)	40.000 HR				
1130	637.071 DUST CONTROL	LUMP	LUMP			
1140	639.18 FIELD OFFICE TYPE A	1.000 EA				
1150	652.30 FLASHING ARROW BOARD	2.000 EA				
1160	652.31 TYPE I BARRICADE	60.000 EA				
1170	652.311 TYPE II BARRICADE	20.000 EA				
1180	652.33 DRUM	100.000 EA				
1190	652.34 CONE	200.000 EA				

CONTRACT ID: 008473.00 PROJECT(S): STP-8473(00)X

CONTRACTOR :_____

LINE NO	ITEM DESCRIPTION	APPROX. QUANTITY AND UNITS	UNIT PRICE DOLLARS	UNIT PRICE CTS	BID AMOUNT DOLLARS	BID AMOUNT CTS
1200	652.35 CONSTRUCTION SIGNS	400.000 M2				
1210	652.361 MAINTENANCE OF TRAFFIC CONTROL DEVICES	LUMP	LUMP			
1220	652.37 WARNING LIGHTS	2.000 GP				
1230	652.38 FLAGGER	7500.000 HR				
1240	652.41 PORTABLE - CHANGEABLE MESSAGE SIGN	2.000 EA				
1250	656.75 TEMPORARY SOIL EROSION AND WATER POLLUTION CONTROL	LUMP	LUMP			
1260	659.10 MOBILIZATION	LUMP	LUMP			
1270	660.21 ON-THE-JOB TRAINING (BID)	3000.000 HR				
1280	823.011 GATE VALVE BOX, INSTALL ONLY	4.000 EA				
1290	823.332 GATE VALVE BOX, ADJUST TO GRADE	17.000 EA				
	SECTION 0001 TOTAL					
	TOTAL BID					

HARRISON-8473.00
ROUTE 117-CULVERTS
12 APRIL 2004

SPECIAL PROVISION
SECTION 203
EXCAVATION AND EMBANKMENT
(Dredge Materials)

Description: Dredge Material (See MDOT Standard Specifications § 101.2) is regulated as a Special Waste.

Fifty cubic yards or less of Dredge Material Beneficially Used in the area adjacent to and draining into the dredged water body is exempt from Beneficial Use Permits. The Dredge Material quantity from the Harrison Route 117 culvert sites is expected to be less than a total of 50 cubic yards (38 cubic meters).

CONSTRUCTION REQUIREMENTS

Management and Disposal: The contractor shall Beneficially Use all Dredge Material excavated at the Harrison Route 117 Project in the area adjacent to and draining into the dredged water body. No more than 38 cubic meters (50 cubic yards) of Dredge Material may be excavated.

Method of Measurement: Dredge Material will be measured by the cubic meter of material removed.

Basis of Payment: Payment for all Dredge Material Beneficially Used will be incidental to the culvert work.

Payment shall be full compensation for excavation, dewatering, managing, transporting, and placement.

SPECIAL PROVISION
SECTION 606
GUARDRAIL
(Anchorage Assembly)

Description This work shall consist of furnishing and installing anchorage assemblies in accordance with current Standard Specifications and as shown in the attached detail on both sides of each 1.2 m guardrail opening as indicated on the plans.

Materials Materials shall meet the requirements specified in the following subsections of Division 700 - Materials:

Timber Preservative	708.05
Metal Beam Rail	710.04
Timber Posts	710.07
Guardrail Hardware	710.08

CONSTRUCTION REQUIREMENTS

Posts Posts shall be laid out at the typical offset as if no gaps were being introduced into the guardrail. Gap shall be located as shown on project plans or as directed by the Resident. The first post on either side of the gap shall be offset 0.3 m (1 ft) and the second post shall be offset 0.15 m (0.5 ft). This approximates a 46 m (151 ft) radius. The Contractor shall stake the spacing of posts in the field for the approval of the Resident prior to excavating post holes. See the attached detail.

Rails The beam immediately adjacent to the gap shall be a full length 3.81 m (12.5 ft) beam. It may be necessary to use a half length of beam in order to get the gap where it needs to be. Cut areas around the ends and at additional bolt holes shall be thoroughly cleaned and painted with two coats of approved aluminum rust resistant paint, or as directed by the project Resident. Holes shall not be burned.

Method of Measurement Anchorage assemblies will be measured by the unit (each) complete in place and will include one 3.81 m (12.5 ft) beam and all components shown on the attached detail.

Basis of Payment The accepted quantity of anchorage assemblies will be paid for at the contract unit price per each, complete in place and will include one 3.81 m (12.5 ft) beam and all components shown on the attached detail. Payment shall be full compensation for furnishing and installing all components as shown on the attached detail and for incidentals necessary to complete the work.

Payment will be made under:

Pay Item		Pay Unit
606.259	Anchorage Assembly	Each

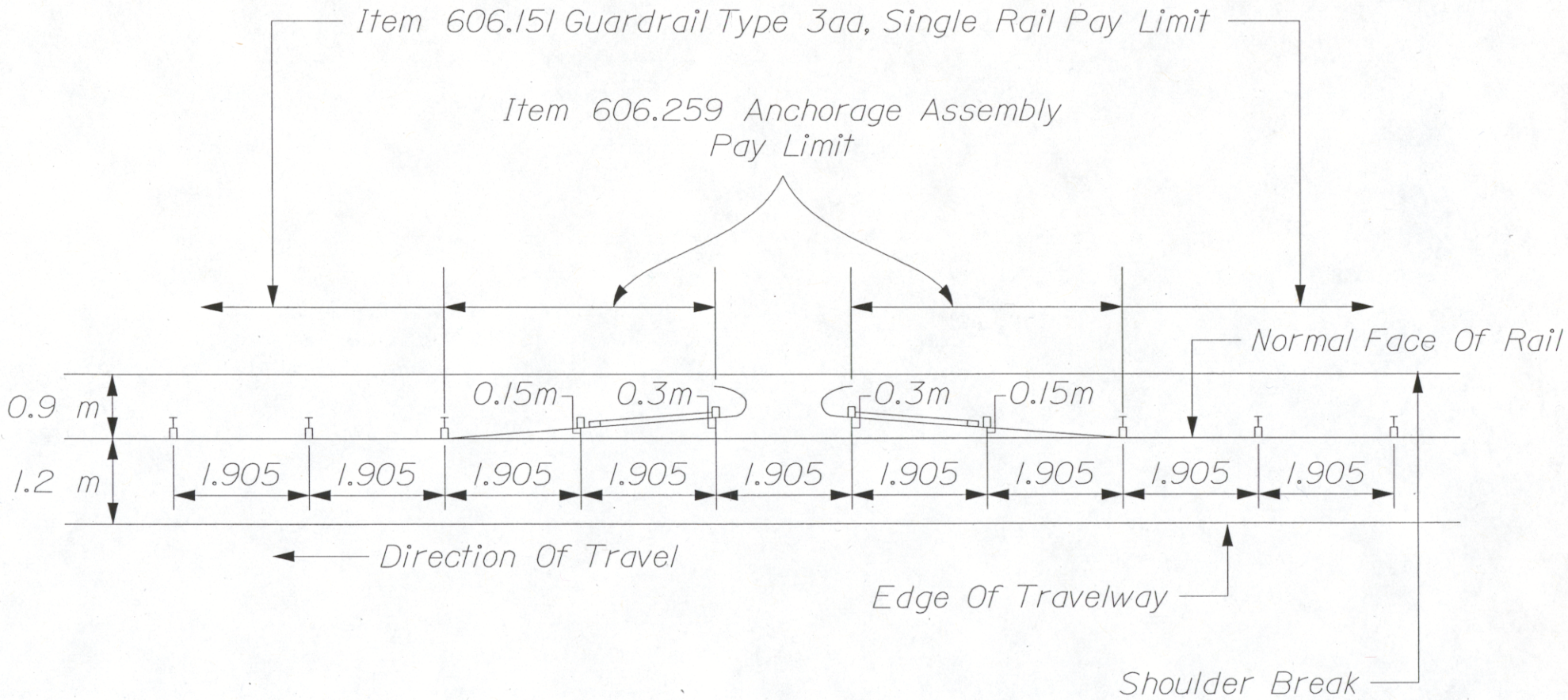

Harrison Pedestrian Access Gaps
Pin. # 8473.00

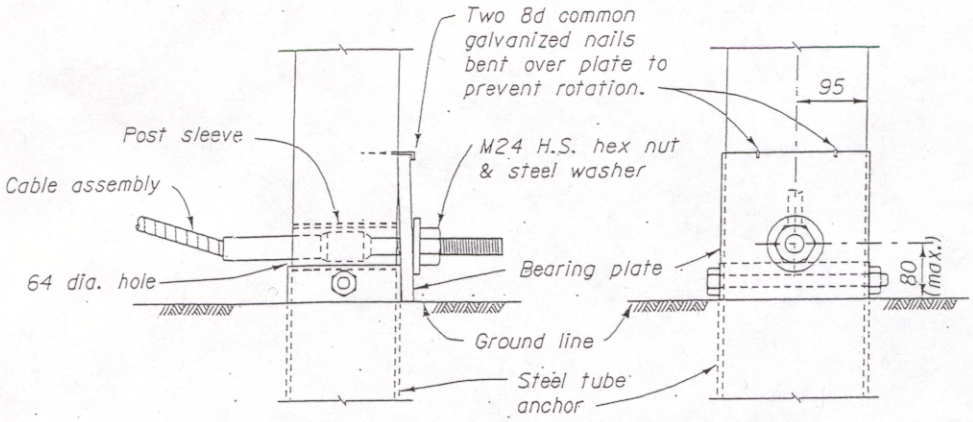

DETAIL A

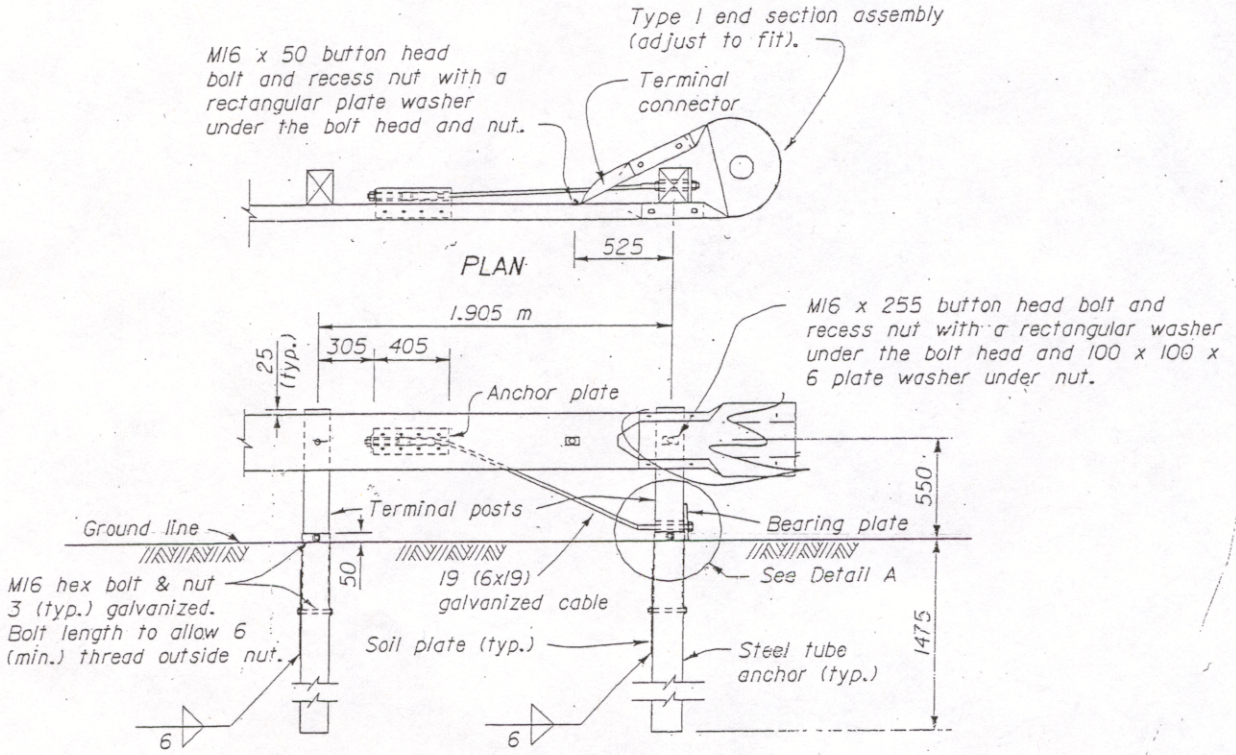

PLAN

ELEVATION

ANCHORAGE ASSEMBLY

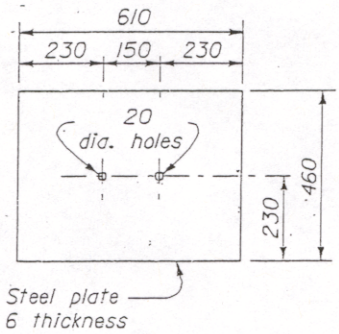

SOIL PLATE

(2 reqd.)

NOTES:

1. Unless otherwise shown, dimension are in millimeters.
2. Dimensional tolerances not shown or implied are intended to be those consistent with the proper functioning of the part, including its appearance, and accepted manufacturing practices.
3. Furnish hardware in metric sizes shown. Equivalent imperial sizes may be used when metric sizes are not available.

Anchorage Assembly

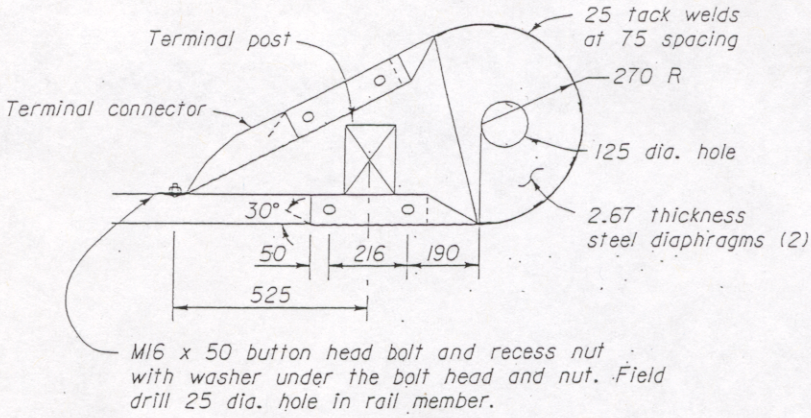

PLAN

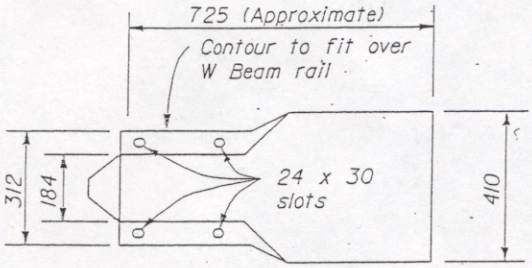

ELEVATION

TYPE I END SECTION ASSEMBLY

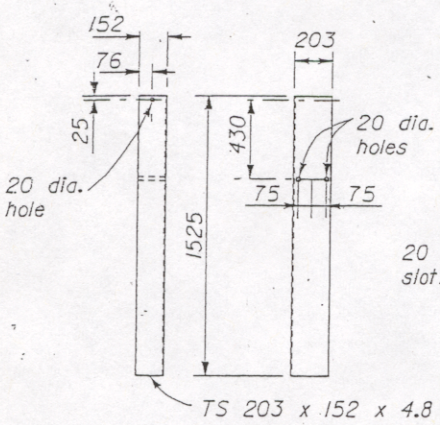

STEEL TUBE ANCHOR

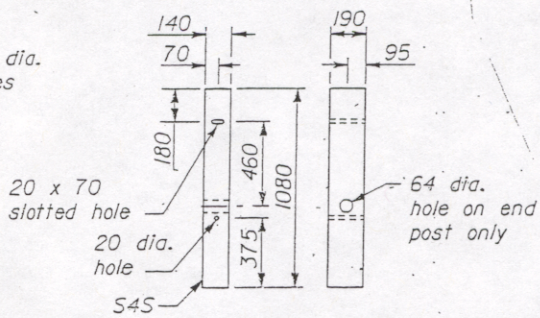

TERMINAL POST

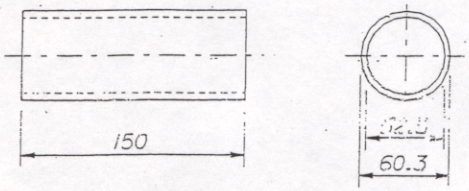

GALVANIZED STANDARD PIPE POST SLEEVE

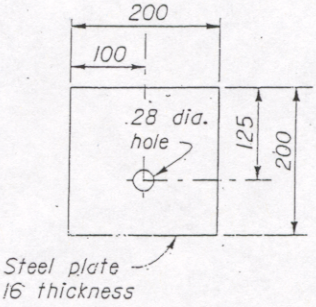

BEARING PLATE

Anchorage Assembly

Harrison PIN 8473.00 **Dufresne-Henry, Inc.**

US Route 117

Calculated by: DKB Date: 10/1/02

Checked by: Date:

Summary of Cuts, Fills & Subbase From Sections

STATION	Excavation				Fill		Project Net Cut/Fill	Subbase Area	Subbase Volume
	Common Area	Common (+) Volume	Rock Area	Rock (+) Volume	Area	Fill (-) Volume			
10+120.00	0.00		0.0		0.00				
		94.0		0.0		0.3			
10+140.00	9.40		0.0		0.03				
		178.2		0.0		2.0			
10+160.00	8.42		0.0		0.17				
		163.7		0.0		1.9			
10+180.00	7.95		0.0		0.02				
		156.2		0.0		0.2			
10+200.00	7.67		0.0		0.00				
		158.3		0.0		1.8			
10+220.00	8.16		0.0		0.18				
		198.1		0.0		2.9			
10+240.00	11.65		0.0		0.11				
		211.1		0.0		2.1			
10+260.00	9.46		0.0		0.10				
		211.5		0.0		1.0			
10+280.00	11.69		0.0		0.00				
		214.7		0.0		1.4			
10+300.00	9.78		0.0		0.14				
		197.3		0.0		2.8			
10+320.00	9.95		0.0		0.14				
		210.4		0.0		3.9			
10+340.00	11.09		0.0		0.25				
		215.9		0.0		2.5			
10+360.00	10.50		0.0		0.00				
		184.8		0.0		11.0			
10+380.00	7.98		0.0		1.10				
		149.8		0.0		21.0			
10+400.00	7.00		0.0		1.00				
		154.7		0.0		17.0			
10+420.00	8.47		0.0		0.70				
		190.4		0.0		9.6			
10+440.00	10.57		0.0		0.26				
		196.4		0.0		4.2			
10+460.00	9.07		0.0		0.16				
		210.5		0.0		3.3			
10+480.00	11.98		0.0		0.17				
		250.3		0.0		1.7			
10+500.00	13.05		0.0		0.00				
		226.6		0.0		9.7			
10+520.00	9.61		0.0		0.97				
		168.1		0.0		16.8			
10+540.00	7.20		0.0		0.71				
		179.8		0.0		11.4			
10+560.00	10.78		0.0		0.43				
		226.5		0.0		4.4			
10+580.00	11.87		0.0		0.01				
		258.8		0.0		0.1			
10+600.00	14.01		0.0		0.00				
		265.5		0.0		0.0			
10+620.00	12.54		0.0		0.00				
		213.3		0.0		1.5			
10+640.00	8.79		0.0		0.15				
		161.9		0.0		21.2			

Harrison PIN 8473.00 **Dufresne-Henry, Inc.**

US Route 117

Calculated by: DKB Date: 10/1/02

Checked by: Date:

Summary of Cuts, Fills & Subbase From Sections

STATION	Excavation				Fill		Project Net Cut/Fill	Subbase Area	Subbase Volume
	Common Area	Common (+) Volume	Rock Area	Rock (+) Volume	Area	Fill (-) Volume			
10+660.00	7.40		0.0		1.97				
		154.4		0.0		24.9			
10+680.00	8.04		0.0		0.52				
		154.7		0.0		7.2			
10+700.00	7.43		0.0		0.20				
		175.6		0.0		2.0			
10+720.00	10.13		0.0		0.00				
		220.8		0.0		21.7			
10+740.00	11.95		0.0		2.17				
		269.0		0.0		30.9			
10+760.00	14.95		0.0		0.92				
		322.9		0.0		9.2			
10+780.00	17.34		0.0		0.00				
		356.5		0.0		4.9			
10+800.00	18.31		0.0		0.49				
		236.6		0.0		23.7			
10+820.00	5.35		0.0		1.88				
		157.9		0.0		27.6			
10+840.00	10.44		0.0		0.88				
		237.7		0.0		9.1			
10+860.00	13.33		0.0		0.03				
		236.7		0.0		1.3			
10+880.00	10.34		0.0		0.10				
		198.8		0.0		2.7			
10+900.00	9.54		0.0		0.17				
		170.5		0.0		10.2			
10+920.00	7.51		0.0		0.85				
		123.5		0.0		37.6			
10+940.00	4.84		0.0		2.91				
		151.2		0.0		30.5			
10+960.00	10.28		0.0		0.14				
		284.8		0.0		1.4			
10+980.00	18.20		0.0		0.00				
		265.5		0.0		5.9			
11+000.00	8.35		0.0		0.59				
		175.1		0.0		88.0			
11+020.00	9.16		0.0		8.21				
		169.4		0.0		86.6			
11+040.00	7.78		0.0		0.45				
		146.6		0.0		17.4			
11+060.00	6.88		0.0		1.29				
		128.0		0.0		30.9			
11+080.00	5.92		0.0		1.80				
		119.9		0.0		34.0			
11+100.00	6.07		0.0		1.60				
		120.5		0.0		34.8			
11+120.00	5.98		0.0		1.88				
		180.1		0.0		18.8			
11+140.00	12.03		0.0		0.00				
		243.1		0.0		0.0			
11+160.00	12.28		0.0		0.00				
		252.6		0.0		0.0			
11+180.00	12.98		0.0		0.00				
		298.4		0.0		0.0			

Harrison PIN 8473.00 **Dufresne-Henry, Inc.**

US Route 117

Calculated by: DKB Date: 10/1/02

Checked by: Date:

Summary of Cuts, Fills & Subbase From Sections

STATION	Excavation				Fill		Project Net Cut/Fill	Subbase Area	Subbase Volume
	Common Area	Common (+) Volume	Rock Area	Rock (+) Volume	Area	Fill (-) Volume			
11+200.00	16.86		0.0		0.00				
		319.5		0.0		6.1			
11+220.00	15.09		0.0		0.61				
		453.4		0.0		12.2			
11+260.00	7.58		0.0		0.00				
		138.1		0.0		0.0			
11+280.00	6.23		0.0		0.00				
		114.5		0.0		4.0			
11+300.00	5.22		0.0		0.40				
		176.2		0.0		5.2			
11+320.00	12.40		0.0		0.12				
		295.2		0.0		1.2			
11+340.00	17.12		0.0		0.00				
		305.4		0.0		0.3			
11+360.00	13.42		0.0		0.03				
		279.0		0.0		1.3			
11+380.00	14.48		0.0		0.10				
		307.8		0.0		1.1			
11+400.00	16.30		0.0		0.01				
		363.5		0.0		0.4			
11+420.00	20.05		0.0		0.03				
		363.9		0.0		0.3			
11+440.00	16.34		0.0		0.00				
		377.2		0.0		0.1			
11+460.00	21.38		0.0		0.01				
		446.2		0.0		1.0			
11+480.00	23.24		0.0		0.09				
		420.2		0.0		2.8			
11+500.00	18.78		0.0		0.19				
		244.6		0.0		3.9			
11+520.00	5.68		0.0		0.20				
		129.7		0.0		8.9			
11+540.00	7.29		0.0		0.69				
		94.2		0.0		20.9			
11+560.00	2.13		0.0		1.40				
		84.0		0.0		20.5			
11+580.00	6.27		0.0		0.65				
		274.7		0.0		7.6			
11+600.00	21.20		0.0		0.11				
		271.5		0.0		2.3			
11+620.00	5.95		0.0		0.12				
		118.0		0.0		1.9			
11+640.00	5.85		0.0		0.07				
		123.2		0.0		0.7			
11+660.00	6.47		0.0		0.00				
		88.3		0.0		56.2			
11+680.00	2.36		0.0		5.62				
		104.2		0.0		164.2			
11+700.00	8.06		0.0		10.80				
		108.3		0.0		171.3			
11+720.00	2.77		0.0		6.33				
		72.1		0.0		65.8			
11+740.00	4.44		0.0		0.25				
		98.7		0.0		7.8			

Harrison PIN 8473.00 **Dufresne-Henry, Inc.**

US Route 117

Calculated by: DKB Date: 10/1/02

Checked by: Date:

Summary of Cuts, Fills & Subbase From Sections

STATION	Excavation				Fill		Project Net Cut/Fill	Subbase Area	Subbase Volume
	Common Area	Common (+) Volume	Rock Area	Rock (+) Volume	Area	Fill (-) Volume			
11+760.00	5.43		0.0		0.53				
		121.1		0.0		49.4			
11+780.00	6.68		0.0		4.41				
		202.1		0.0		44.5			
11+800.00	13.53		0.0		0.04				
		238.2		0.0		5.6			
11+820.00	10.29		0.0		0.52				
		207.6		0.0		5.7			
11+840.00	10.47		0.0		0.05				
		203.6		0.0		1.0			
11+860.00	9.89		0.0		0.05				
		193.2		0.0		0.8			
11+880.00	9.43		0.0		0.03				
		174.9		0.0		0.3			
11+900.00	8.06		0.0		0.00				
		138.0		0.0		2.4			
11+920.00	5.74		0.0		0.24				
		146.1		0.0		2.6			
11+940.00	8.87		0.0		0.02				
		179.8		0.0		0.8			
11+960.00	9.11		0.0		0.06				
		181.0		0.0		1.4			
11+980.00	8.99		0.0		0.08				
		219.2		0.0		0.8			
12+000.00	12.93		0.0		0.00				
		246.7		0.0		0.0			
12+020.00	11.74		0.0		0.00				
		250.5		0.0		0.0			
12+040.00	13.31		0.0		0.00				
		261.6		0.0		2.5			
12+060.00	12.85		0.0		0.25				
		211.9		0.0		4.1			
12+080.00	8.34		0.0		0.16				
		145.6		0.0		14.2			
12+100.00	6.22		0.0		1.26				
		133.0		0.0		17.5			
12+120.00	7.08		0.0		0.49				
		168.5		0.0		6.0			
12+140.00	9.77		0.0		0.11				
		201.4		0.0		3.0			
12+160.00	10.37		0.0		0.19				
		168.3		0.0		4.0			
12+180.00	6.46		0.0		0.21				
		113.1		0.0		4.2			
12+200.00	4.85		0.0		0.21				
		109.5		0.0		12.3			
12+220.00	6.10		0.0		1.02				
		115.9		0.0		15.0			
12+240.00	5.49		0.0		0.48				
		150.6		0.0		4.8			
12+260.00	9.57		0.0		0.00				
		190.5		0.0		0.0			
12+280.00	9.48		0.0		0.00				
		178.4		0.0		0.1			

Harrison PIN 8473.00 **Dufresne-Henry, Inc.**

US Route 117

Calculated by: DKB Date: 10/1/02

Checked by: Date:

Summary of Cuts, Fills & Subbase From Sections

STATION	Excavation				Fill		Project Net Cut/Fill	Subbase Area	Subbase Volume
	Common Area	Common (+) Volume	Rock Area	Rock (+) Volume	Area	Fill (-) Volume			
12+300.00	8.36		0.0		0.01				
		199.3		0.0		0.1			
12+320.00	11.57		0.0		0.00				
		184.8		0.0		1.4			
12+340.00	6.91		0.0		0.14				
		125.2		0.0		3.7			
12+360.00	5.61		0.0		0.23				
		97.5		0.0		5.2			
12+380.00	4.14		0.0		0.29				
		128.6		0.0		2.9			
12+400.00	8.72		0.0		0.00				
		127.9		0.0		1.4			
12+420.00	4.07		0.0		0.14				
		73.1		0.0		5.8			
12+440.00	3.24		0.0		0.44				
		76.7		0.0		6.7			
12+460.00	4.43		0.0		0.23				
		105.7		0.0		4.4			
12+480.00	6.14		0.0		0.21				
		133.4		0.0		2.2			
12+500.00	7.20		0.0		0.01				
		141.4		0.0		0.1			
12+520.00	6.94		0.0		0.00				
		143.1		0.0		1.9			
12+540.00	7.37		0.0		0.19				
		139.2		0.0		2.5			
12+560.00	6.55		0.0		0.06				
		159.4		0.0		8.5			
12+580.00	9.39		0.0		0.79				
		150.0		0.0		8.6			
12+600.00	5.61		0.0		0.07				
		147.1		0.0		4.5			
12+620.00	9.10		0.0		0.38				
		210.5		0.0		8.0			
12+640.00	11.95		0.0		0.42				
		214.2		0.0		4.2			
12+660.00	9.47		0.0		0.00				
		159.1		0.0		4.0			
12+680.00	6.44		0.0		0.40				
		132.7		0.0		7.8			
12+700.00	6.83		0.0		0.38				
		113.9		0.0		8.6			
12+720.00	4.56		0.0		0.48				
		90.4		0.0		9.1			
12+740.00	4.48		0.0		0.43				
		154.4		0.0		5.7			
12+760.00	10.96		0.0		0.14				
		221.7		0.0		2.4			
12+780.00	11.21		0.0		0.10				
		215.4		0.0		1.6			
12+800.00	10.33		0.0		0.06				
		200.1		0.0		1.2			
12+820.00	9.68		0.0		0.06				
		214.3		0.0		0.6			

Harrison PIN 8473.00 **Dufresne-Henry, Inc.**

US Route 117

Calculated by: DKB Date: 10/1/02

Checked by: Date:

Summary of Cuts, Fills & Subbase From Sections

STATION	Excavation				Fill		Project Net Cut/Fill	Subbase Area	Subbase Volume
	Common Area	Common (+) Volume	Rock Area	Rock (+) Volume	Area	Fill (-) Volume			
12+840.00	11.75		0.0		0.00				
		177.5		0.0		0.0			
12+860.00	6.00		0.0		0.00				
		199.0		0.0		0.0			
12+880.00	13.90		0.0		0.00				
		285.5		0.0		0.0			
12+900.00	14.65		0.0		0.00				
		260.9		0.0		0.0			
12+920.00	11.44		0.0		0.00				
		220.0		0.0		0.0			
12+940.00	10.56		0.0		0.00				
		203.5		0.0		2.5			
12+960.00	9.79		0.0		0.25				
		132.6		0.0		13.6			
12+980.00	3.47		0.0		1.11				
		93.2		0.0		11.1			
13+000.00	5.85		0.0		0.00				
		166.9		0.0		0.5			
13+020.00	10.84		0.0		0.05				
		216.9		0.0		3.3			
13+040.00	10.85		0.0		0.28				
		207.8		0.0		6.4			
13+060.00	9.93		0.0		0.36				
		234.8		0.0		3.6			
13+080.00	13.55		0.0		0.00				
		196.0		0.0		4.2			
13+100.00	6.05		0.0		0.42				
		120.7		0.0		24.3			
13+120.00	6.02		0.0		2.01				
		162.5		0.0		21.2			
13+140.00	10.23		0.0		0.11				
		262.1		0.0		1.1			
13+160.00	15.98		0.0		0.00				
		304.0		0.0		0.0			
13+180.00	14.42		0.0		0.00				
		238.6		0.0		0.0			
13+200.00	9.44		0.0		0.00				
		288.1		0.0		13.7			
13+220.00	19.37		0.0		1.37				
		347.2		0.0		16.1			
13+240.00	15.35		0.0		0.24				
		261.2		0.0		3.2			
13+260.00	10.77		0.0		0.08				
		184.4		0.0		1.2			
13+280.00	7.67		0.0		0.04				
		57.5		0.0		0.3			
13+295.00	0.00		0.0		0.00				
		30,699.5		**0.0**		**1,727.4**			**0.0**