STATE OF MAINE

Department of Transportation

Standard Details

Revision of December 2002

FOREWARD

This edition of the State of Maine, Department of Transportation, Standard Details will be used on Projects designed and Bid in either metric or US Customary units. The Bidder shall be responsible for determining if metric or US Customary is used in the Schedule of Items and for determining the proper Bid for the units shown. All Projects will be built in the units shown on the Schedule of Items. Individuals using these Standard Details must familiarize themselves with the proper units. All units in this Standard Detail book are in metric, and in millimeters unless otherwise noted. The details in this book correspond to the appropriate section in the Standard Specification Book. For example, Curb is Section 609 in the Standard Specifications and is 609(X) in the Standard Detail Book. An electronic version of these specification is available for reference purposes at www.state.me.us/mdot/project/design/homepage.htm Updates are available at the same address and it is the responsibility of the Bidder to obtain these updates.

COMMON METRIC UNITS AND CONVERSION TO US CUSTOMARY

Unit	Divide	By	To Get
Length	km m mm	1.609344 0.3048 25.4	mi ft in
Area	km^2 ha m^2 m^2	2.5900 0.404856 0.836127 0.092903	mi^2 acre yd^2 ft^2
Volume	m^3 m^3 L	0.764555 0.028317 3.78541	yd^3 ft^3 gal
Mass	kg Mg	0.453592 0.907184	lb ton
Mass/Unit Area	kg/m^2	4.88243	psf
Mass Density	kg/m^3	16.0185	pcf
Force	N kN	4.44822 4.44822	lb kip
Force/Unit Length	kN/m	14.5939	klf
Pressure Stress Modulus of Elasticity	Pa kPa kPa Mpa	47.8803 47.8803 6.89476 6.89476	psf ksf psi ksi
Bending Moment / Torque	Nm	1.35582	ft-lb
Moment of Force	kNm	1.35582	ft-kip
Moment of Inertia	mm^4	416231	in^4
Section Modulus	mm^3	16387.064	in^3
Temperature	°C	5/9(°F-32)	°F

TABLE OF CONTENTS

DIVISION 200 – EARTHWORK

Section page .....

202 Pavement Butt Joint..... 202(01)
203 Muck Excavation and Waste Disposal..... 203(01)
Slope Blankets..... 203(02)

DIVISION 500 – STRUCTURES

501 Pipe Piles.....501(01-02)
H-Piles .....501(03)
502 Concrete Joints 502(01)
Composite Concrete Superstructure Slab ..... 502(02)
Concrete Curb with Wearing Surface ..... 502(03)
Concrete Approach Slab..... 502(04)
Bridge Drain .....502(05-06)
Precast Concrete Deck Panels ..... 502(07-12)
Concrete Sidewalk on Bridges ..... 502(13)
504 Sliding Bearing Pedestals ..... 504(01-06)
Rocker Bearing Pedestals.....504(07-14)
Diaphragms..... 504(15-16)
Crossframes..... 504(17-20)
Tension Flange Connection for Diaphragms & Crossframes .....504(21)
Diaphragms & Crossframes Notes .....504(22)
Hand Hold Details..... 504(23-24)
Concrete Pipe Ties..... 504(25-27)
505 Shear Connectors ..... 505(01)
507 Steel Bridge Railing.....507(01-12)
Steel Approach Railing 507(13-18)
Barrier Mounted Steel Bridge Railing.....507(19-30)
520 Expansion Device - Gland Seal.....520(01-07)
Expansion Device - Compression Seal..... 520(08-14)
521 Expansion Device - Finger Joint.....521(01-11)
526 Temporary Concrete Barrier ..... 526(01-04)
Permanent Concrete Barrier.....526(05-20)
Concrete Transition Barrier ..... 526(21-34)
Texas Classic Rail ..... 526(35-50)
527 Portable Energy Absorption Unit .....527(01)
535 Precast Superstructure .....535(01-03)
Precast Slab..... 535(04-05)
Precast Box Beam ..... 535(06-07)

DIVISION 600 – MISCELLANEOUS CONSTRUCTION

603 Concrete Box Culvert Extension Using Metal Pipe ..... 603(01)
Inlets ..... 603(02)
Concrete Inlet Endwall 603(03-06)
Culvert Wall Thickness ..... 603(07-08)
Culvert Pipe ..... 603(09)
604 Catch Basins ..... 604(01-03)
Catch Basin & Manhole Tops ..... 604(04-08)
Catch Basin Type "E" ..... 604(09)
Catch Basin Type "F" ..... 604(10-11)
Catch Basin Type A-1-P & B-1-P ..... 604(12-17)
605 Underdrain ..... 605(01-02)
606 Mailbox Posts ..... 606(01-02)
Guardrail ..... 606(03-06)
Reflectorized Beam Guardrail Delineators ..... 606(07)
M.E.L.T. ..... 606(08-15)
Widen Shoulder for Guardrail End Treatment ..... 606(16,18-19)
Low Volume Guardrail End ..... 606(17)
Guardrail Type 3 - Bridge Mounted ..... 606(20-23)
Guardrail over Buried Structures ..... 606(24)
Bridge Transition ..... 606(25-26)
Terminal Connector ..... 606(27)
Cable Releasing Terminal ..... 606(28-33)
607 Fencing ..... 607(01-08)
608 Concrete Sidewalk ..... 608(01)
609 Terminal Curb ..... 609(01)
Curb ..... 609(02-04)
Gutter Grade Transition at Catch Basins ..... 609(05)
Vertical Bridge Curb ..... 609(06)
Cape Cod Curb ..... 609(07)
610 Tree Wells ..... 610(01)
Stone Scour Protection ..... 610(02-04)
620 Geotextiles ..... 620(01-07)
621 Live Staking ..... 621(01-02)
Brush Layering ..... 621(03-04)
Live Wattles ..... 621(05-06)
Live Cribwalls ..... 621(07-08)
Plantings ..... 621(09-10)
Landscape Mound ..... 621(11)

	Erosion Control Mat Planting	621(12)
626	Foundations for Traffic Signals, Highway Signing, & Lighting	626(01-07)
	Electrical Junction Box for Traffic Signals & Lighting	626(08-09)
627	Pavement Markings	627(01-05)
634	Highway Lighting	634(01-03)
642	Concrete Step Quantities	642(01)
643	Traffic Signals	643(01-09)
645	Highway Signing - Type I Signs	645(01-03)
	Highway Signing	645(04-05)
	Highway Signing - H-Beam Posts	645(06)
	Highway Signing - Delineators	645(07)
	Highway Signing - State of Maine Signs	645(08)
	Highway Signing - Installation of Type II Signs	645(09)
	Highway Signing - Overpass Mounted Sign Support	645(10-23)
652	Channelizing Devices	652(01-04)
	Construction Signs	652(05-06)
	Construction Traffic Control	652(07-17)

DIVISION 800 – MISCELLANEOUS DETAILS

801	Drives & Entrances	801(01-09)
	Pavement Transition At Bridges	801(10)
	Pedestrian Ramps	801(11-17)
802	Erosion Control Blankets	802(01-02)
	Temporary Slope Drains	802(03-04)
	Culvert End Treatment	802(05)
	Dumped Stone Check Dam	802(06)
	Temporary Stream Diversion	802(07)
	Temporary Bridge	802(08)
	Temporary Culvert	802(09)
	Inlet Grate Protection	802(10-13)
	Sediment Trap	802(14-16)
	Ditch Turnout	802(17)
	Sediment Barrier	802(18-19)
	Construction Entrance	802(20)
	Level Spreader	802(21)
	Riprap	802(22)
803	Railroad Crossings	803(01-05)
	Railroad Crossings - Traffic Control Devices Applications	803(06)
	Railroad Crossings - Pavement Markings	803(07)
	Railroad Crossings - Signals	803(08-13)

DIVISION 200
EARTHWORK

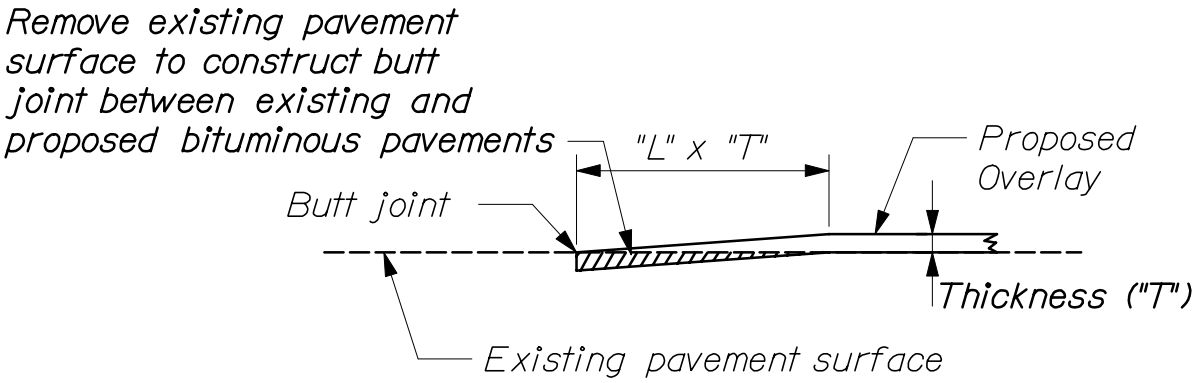

Design or posted speed (km/h):	105	90	80	70
"L" in meters/25 mm of thickness:	20	17	15	14

Design or posted speed (km/h):	65	55	50	40
"L" in meters/25 mm of thickness:	12	11	9	8

Notes:

1. The above lengths are intended for profile grades of 2% or less. When profile grades are greater than 2% "L" may be adjusted to suit field conditions when directed by the Resident.

2. When constructing Butt Joints at intersections or ramps "L" shall be 5.0 m/25 mm of thickness unless otherwise directed by the Resident.

3. Special attention shall be paid to curb sections to assure proper drainage and that there are no flat areas. "L" may be adjusted to suit field conditions when directed by the Resident.

PAVEMENT OVERLAY
BUTT JOINT DETAIL (ROADWAYS)

202(01)

Note:
When muck is excavated to a depth greater or less than what is shown on the plans, the lateral limits for payment shall be determined as shown or as specifically directed by the Resident.

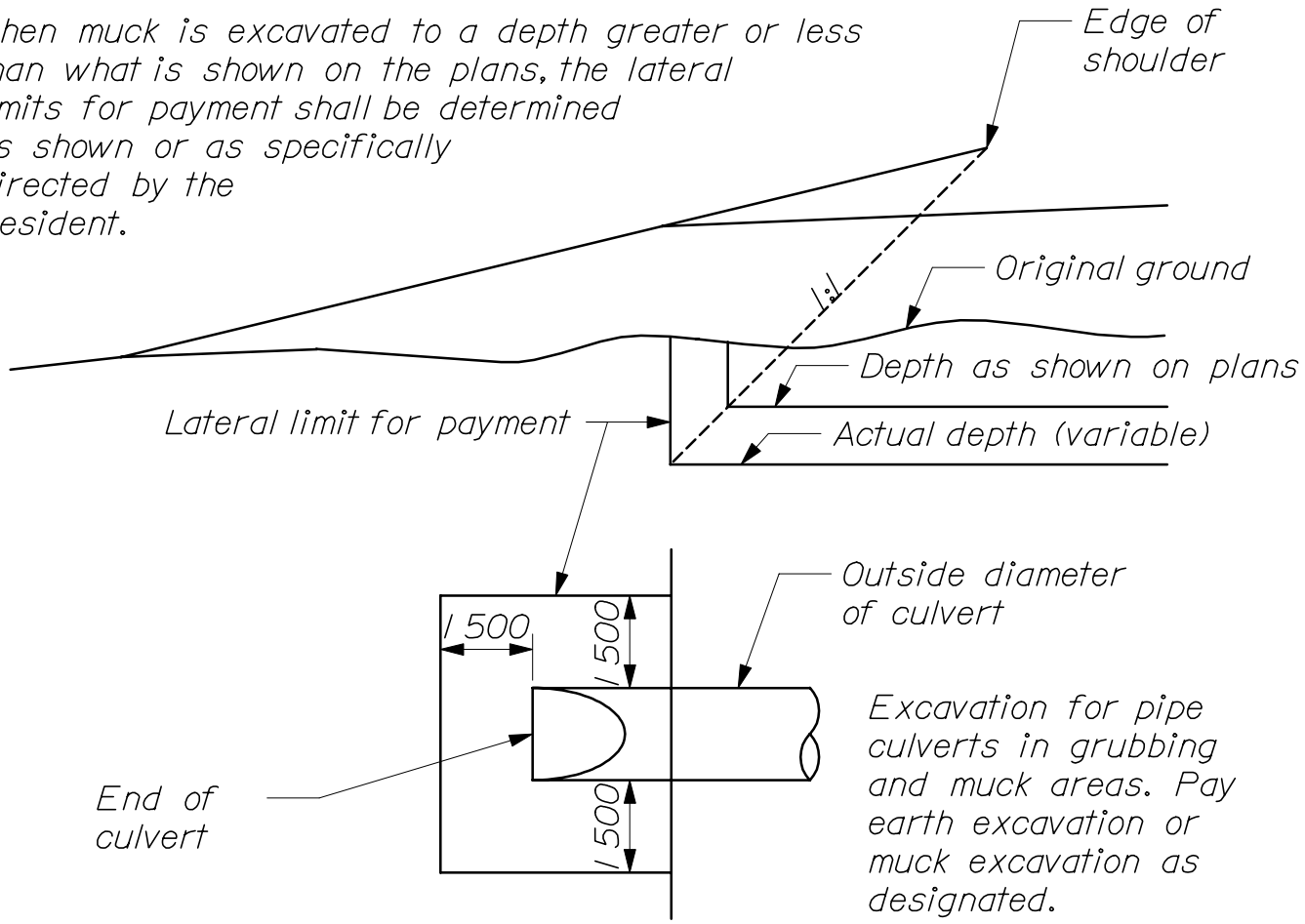

MUCK EXCAVATION PAY LIMITS

Note:
When directed by the Resident, waste material shall be used in this area except that waste shall not be placed in fills designed with slopes of 1:2 or steeper. No additional payment will be made for this work.

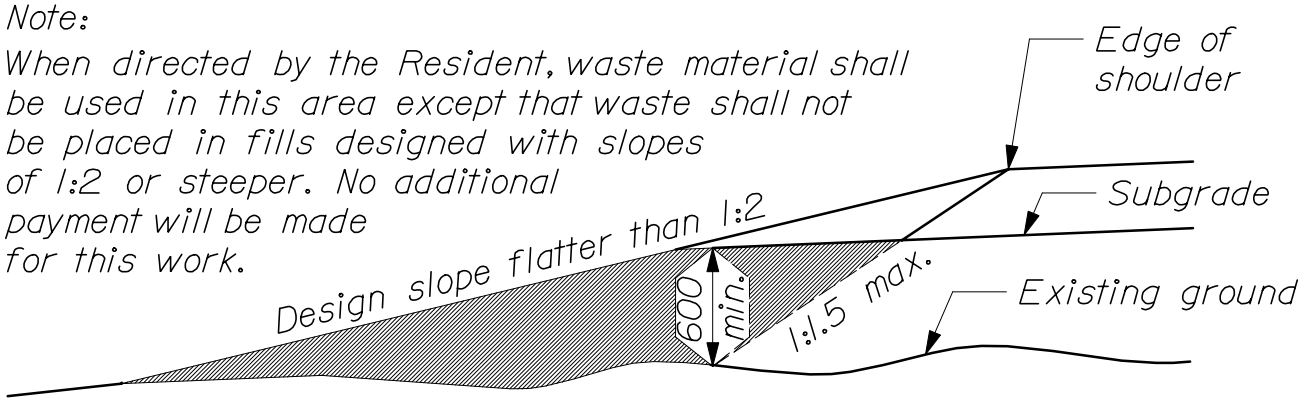

DISPOSAL OF WASTE MATERIALS
(Waste Storage Area)

MUCK EXCAVATION AND WASTE DISPOSAL

203(01)

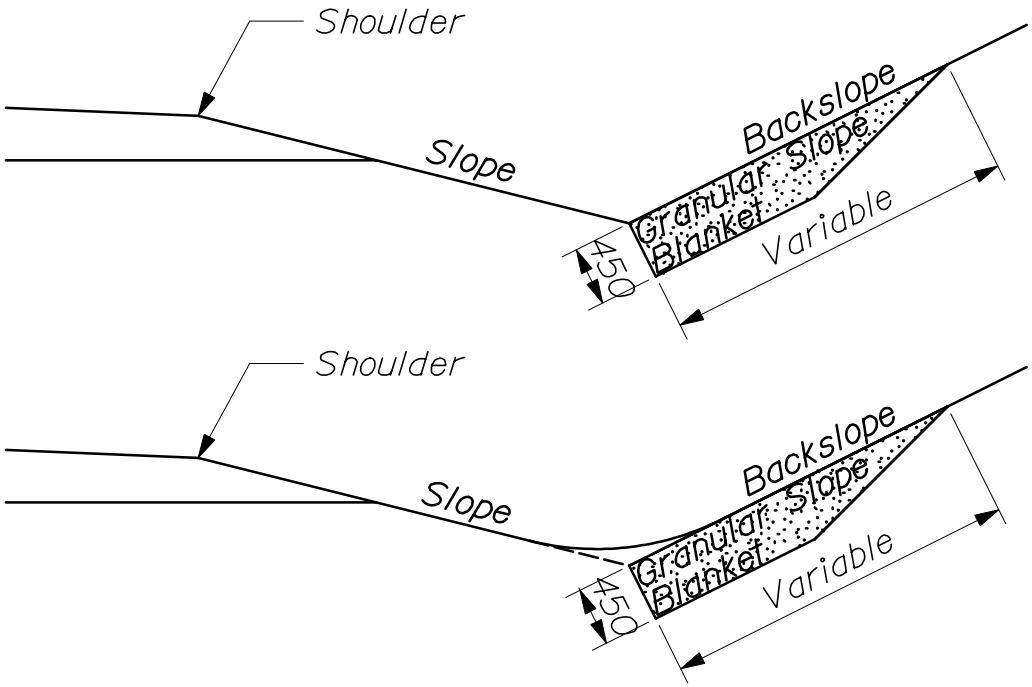

SLOPE BLANKET - BACKSLOPE

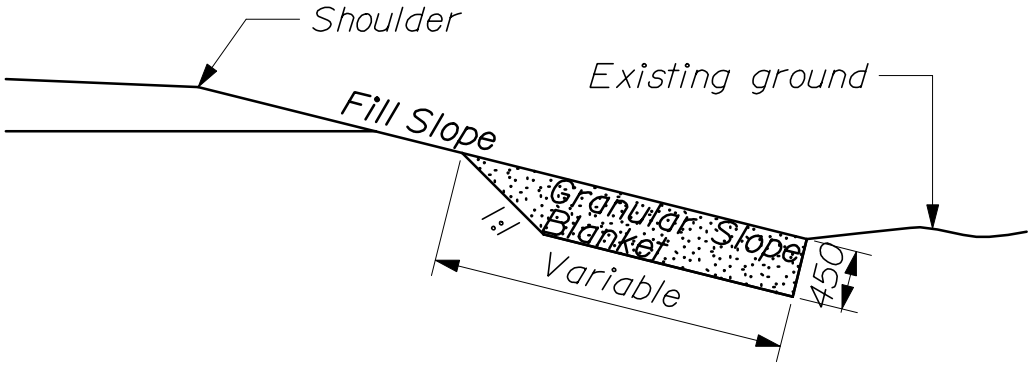

SLOPE BLANKET - FILL SLOPE

SLOPE BLANKETS

203(02)

DIVISION 500

STRUCTURES

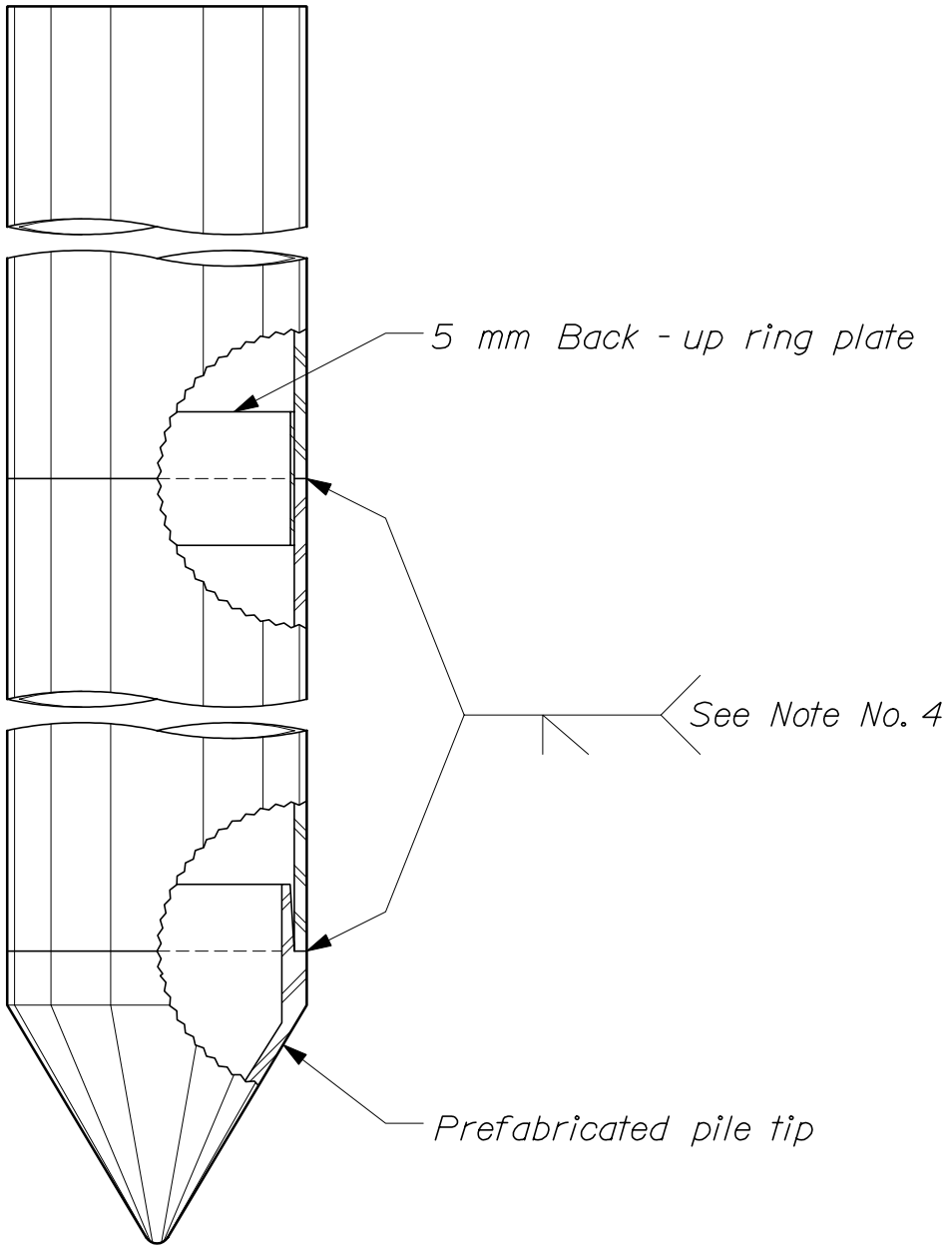

-- PIPE PILE DETAIL --

NOTES:

1. Pile diameter and wall thickness shall be as indicated on the Design Drawings.

2. Pile tips shall be prefabricated cast steel tips with 60° conical points and internal flanges. Pile tips shall be approved by the Engineer.

3. Prefabricated internal splicer sleeves may be used if approved by the Engineer.

4. Refer to "Pipe Pile Splice" details for welding procedures.

PIPE PILES

501(01)

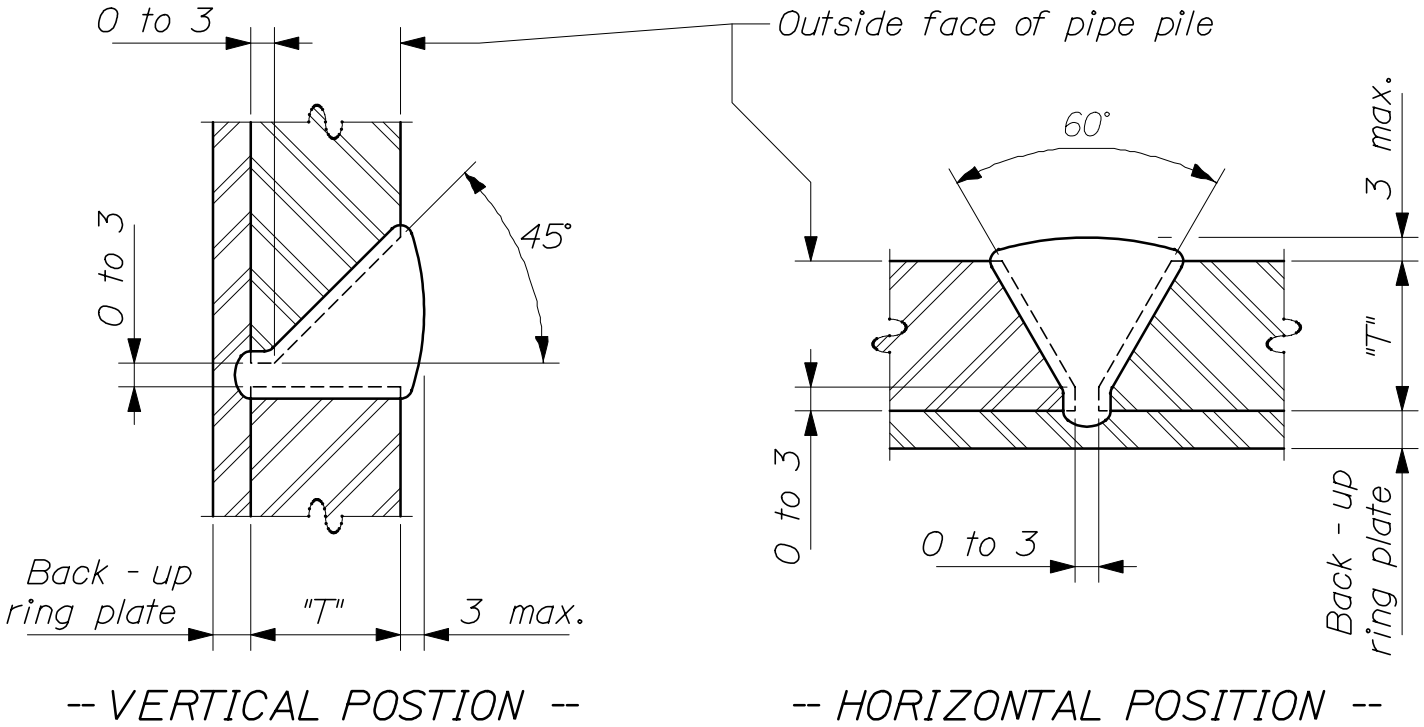

TABLE OF WELD SIZES	
Base Metal Thickness "T" (mm)	Minimum Number of Passes
10, 11	3
13, 14, 16	4
17, 19, 21	5

NOTES:

1. All cutting shall be done with the use of a mechanical guide.

2. Use Manual Shielded - Arc Process and 6010 or 6011 electrodes, unless a different process has been approved by the Engineer.

3. Electrodes shall be dry when used, in accordance with A.W.S. Specification D1.5, as amended by AASHTO.

PIPE PILE SPLICE

501(02)

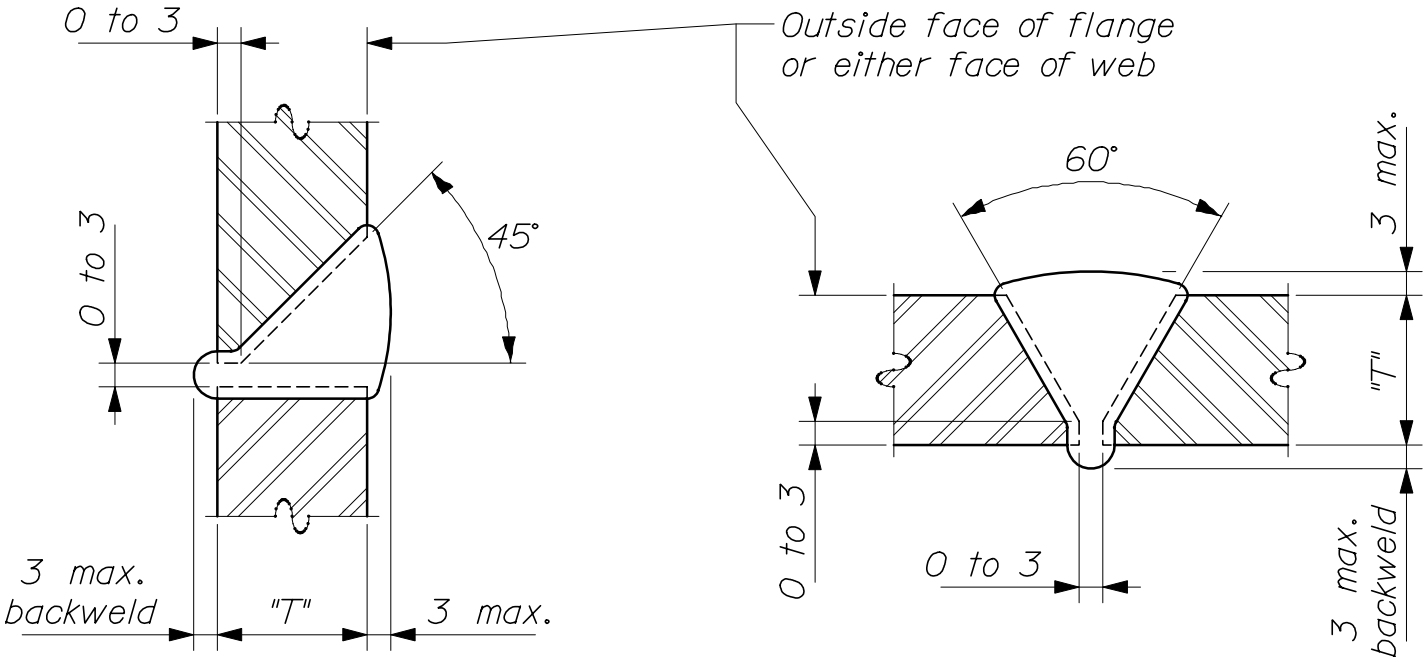

-- VERTICAL POSTION --

-- HORIZONTAL POSITION --

TABLE OF WELD SIZES	
Base Metal Thickness "T" (mm)	Minimum Number of Passes
10, 11	3
13, 14, 16	4
17, 19, 21	5

NOTES:

1. All cutting shall be done with the use of a mechanical guide.

2. Use Manual Shielded - Arc Process and 6010 or 6011 electrodes, unless a different process has been approved by the Engineer.

3. Electrodes shall be dry when used, in accordance with A.W.S. Specification D1.5, as amended by AASHTO.

4. Gouge root before welding the second side.

H - PILE SPLICE

501(03)

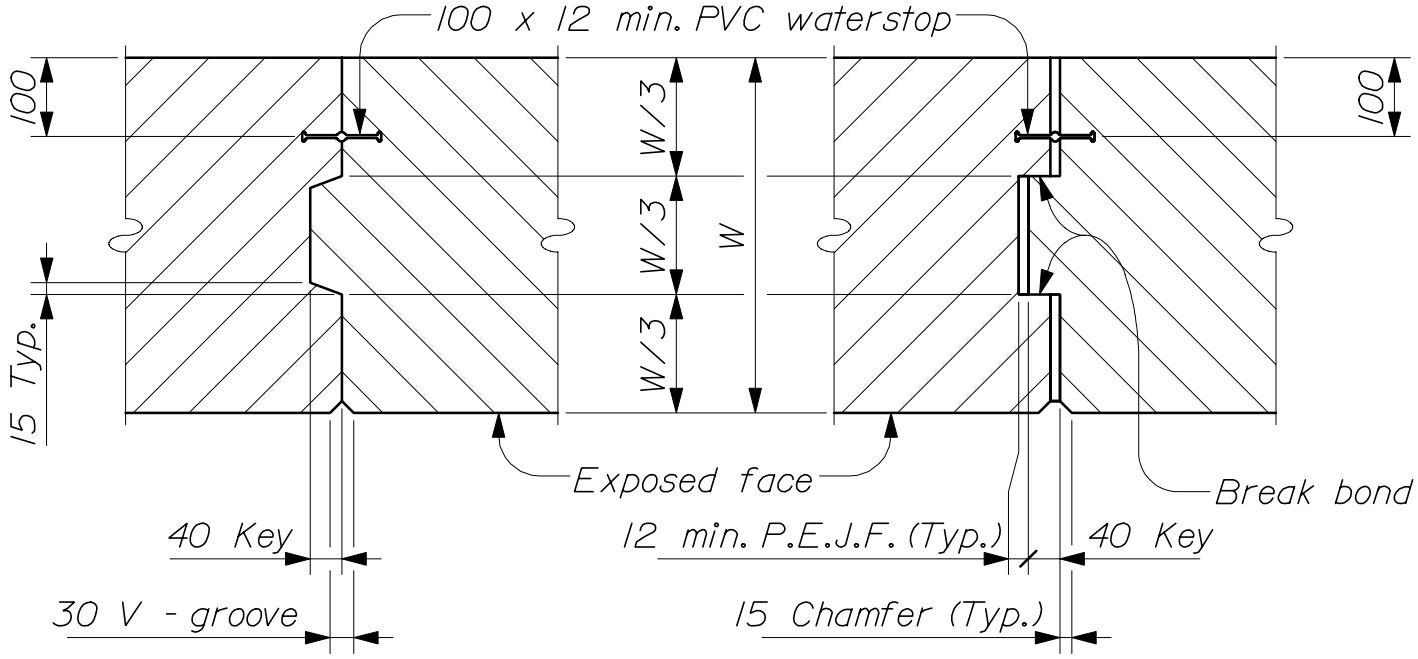

-- VERTICAL CONSTRUCTION OR CONTRACTION JOINT --

-- VERTICAL EXPANSION JOINT --

P.E.J.F = Preformed Expansion Joint Filler

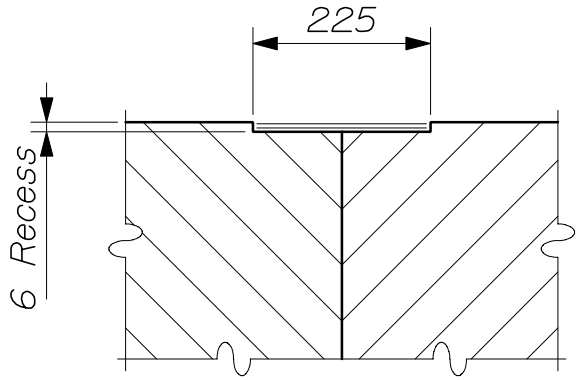

-- JOINT COVER --

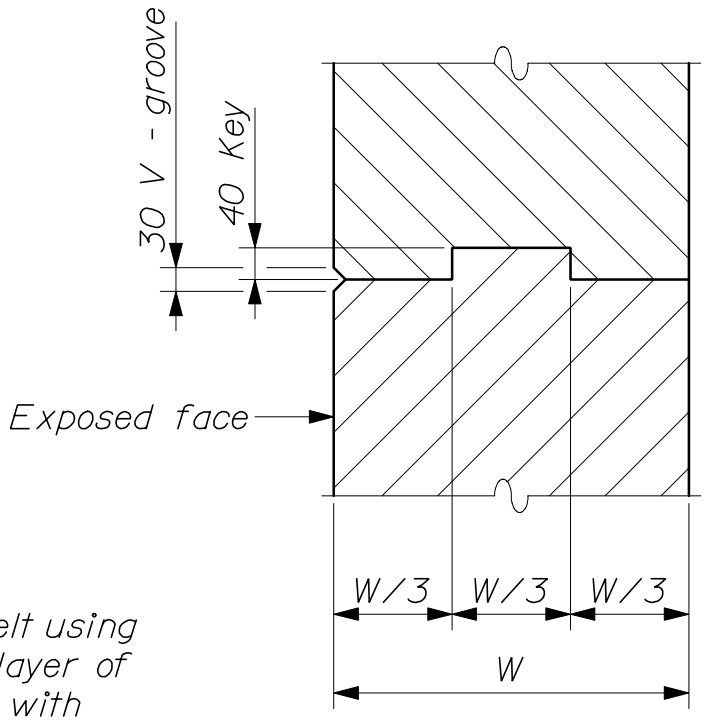

-- HORIZONTAL CONSTRUCTION JOINT --

Apply two (2) layers of heavy roofing felt using plastic roofing cement, or apply one (1) layer of membrane waterproofing in accordance with Section 508 of the Standard Specifications. Recess the covered area unless otherwise indicated. To be used on vertical joints where PVC waterstops cannot be used and on Horiz. joints where there is potential leakage thru wall.

CONCRETE JOINTS

502(01)

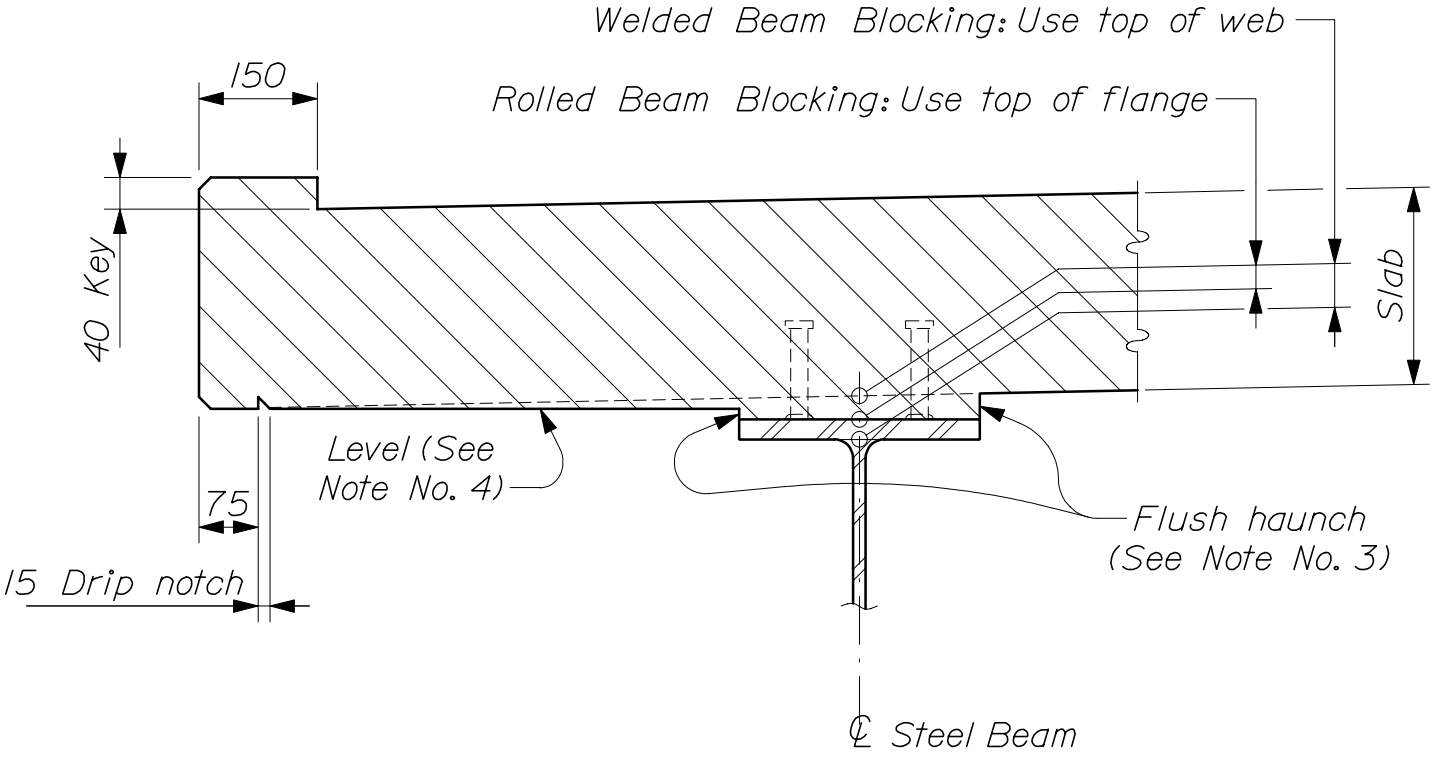

-- SLAB DETAILS --

NOTES:

1. Shear key and drip notch details are typical for all superstructure designs.

2. Blocking dimensions for construction shall be determined using the "Bottom of Slab Elevations" table shown on the Design Drawings. Theoretical Blocking will be given for reference purposes only. Do not use Theoretical Blocking for setting formwork.

3. Blocking on all beams shall be formed using the flush haunch detail shown.

4. On curved superelevated structures, where the distance between the exterior beam and the fascia varies over the length of the deck, the bottom of the slab overhang shall follow the superelevation cross - slope.

COMPOSITE CONCRETE SUPERSTRUCTURE SLAB

502(02)

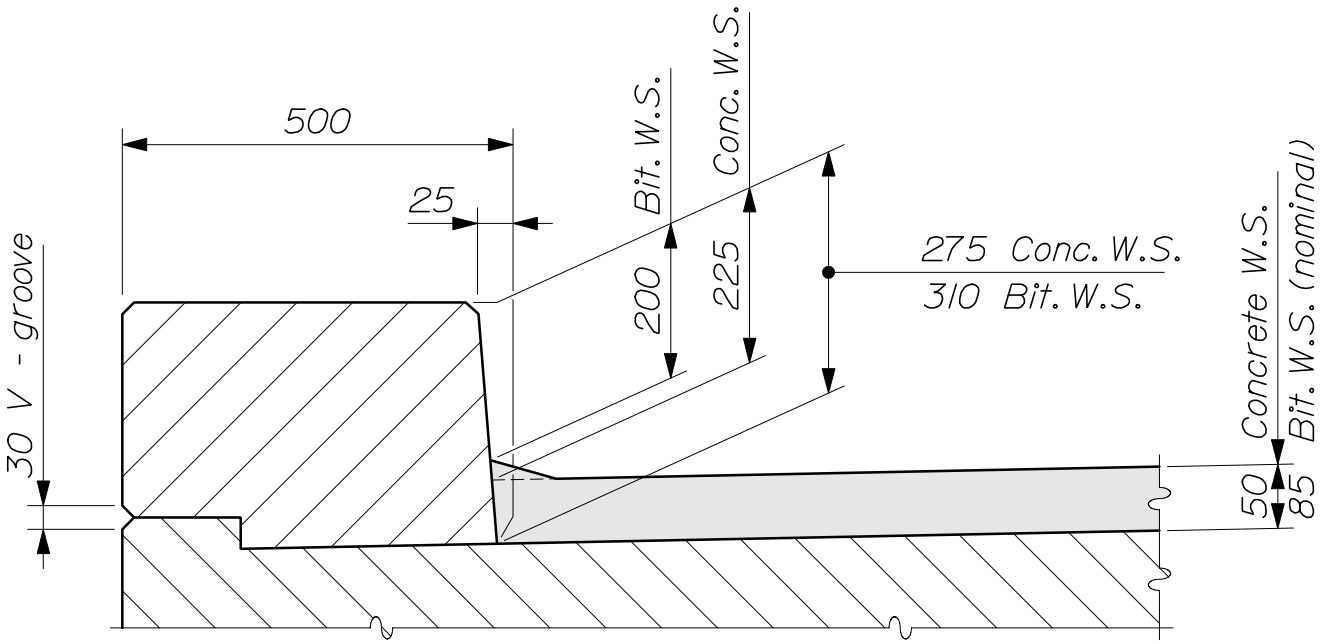

-- CONCRETE CURB WITH WEARING SURFACE --

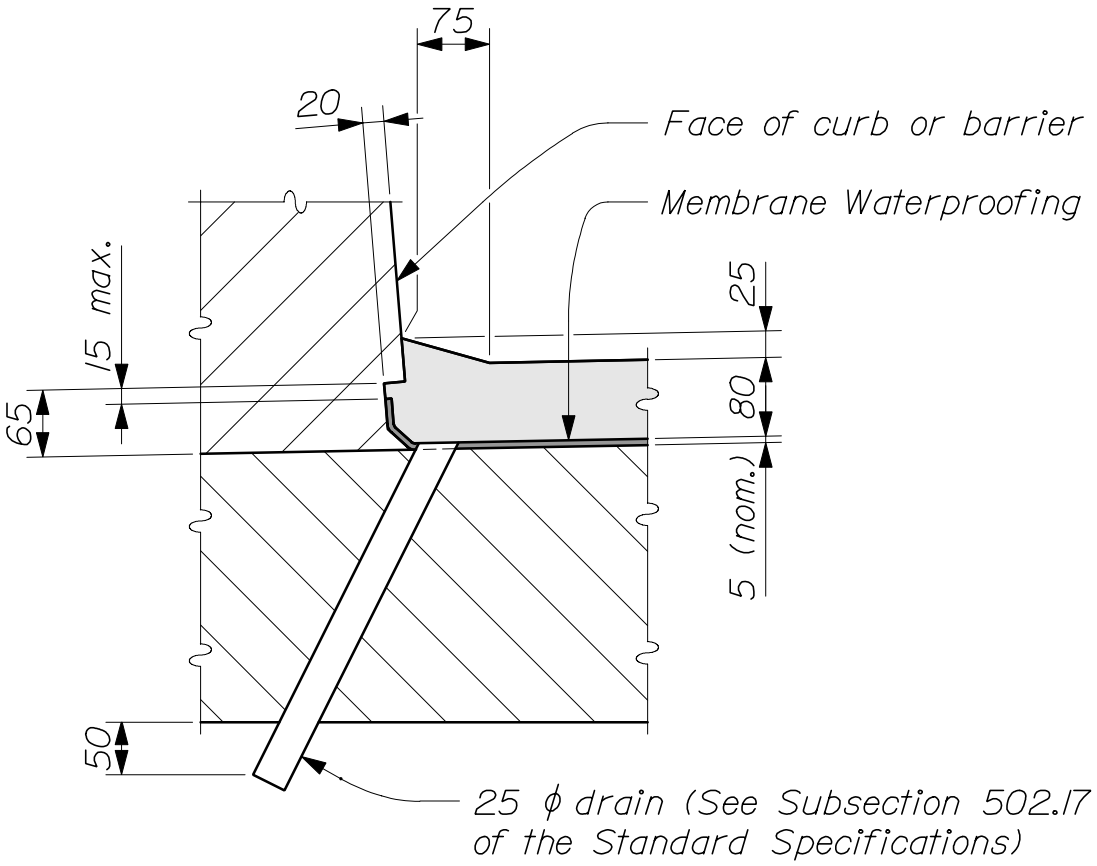

-- BITUMINOUS WEARING SURFACE DETAILS --

CONCRETE CURB WITH WEARING SURFACES

502(03)

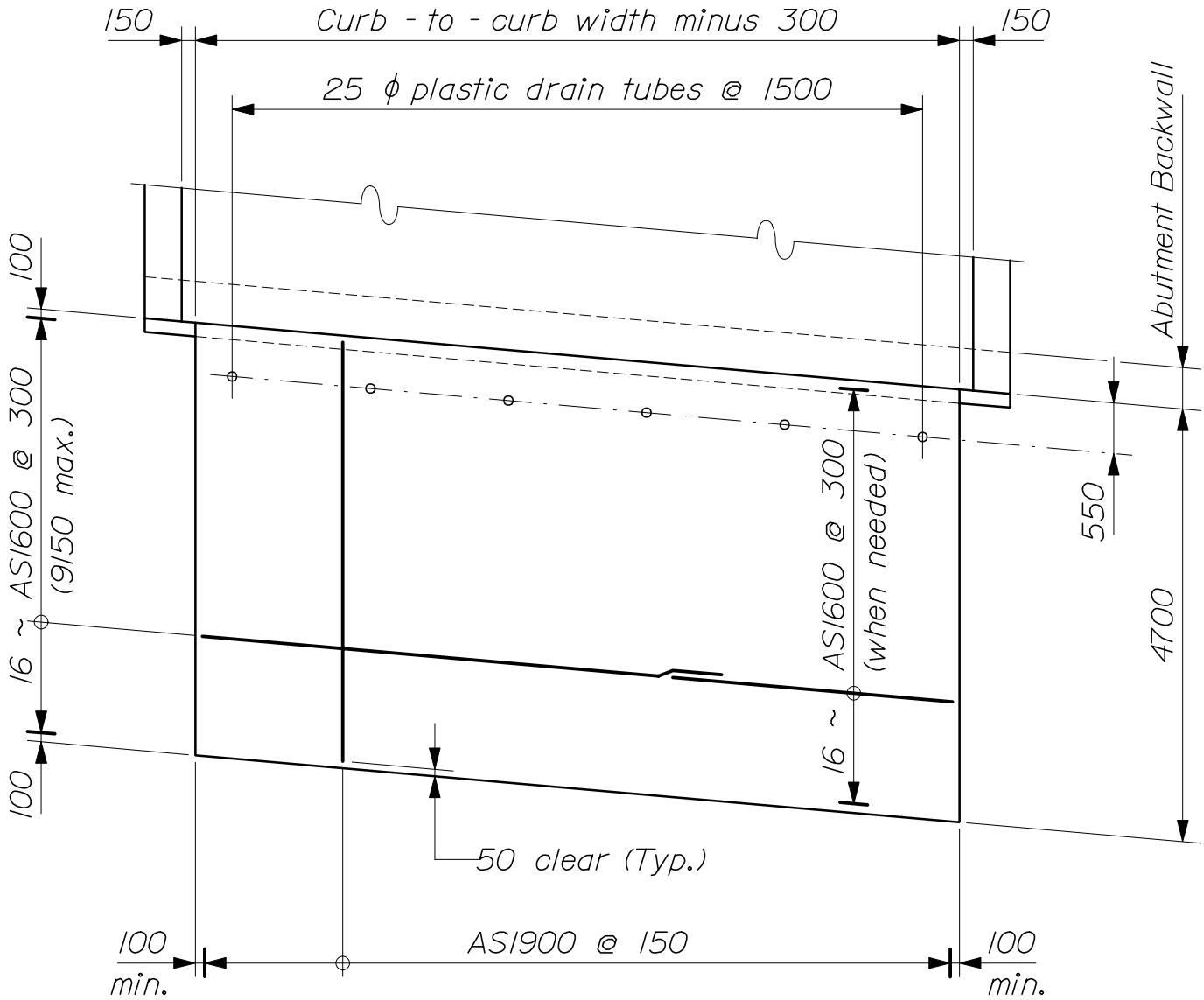

-- PLAN --

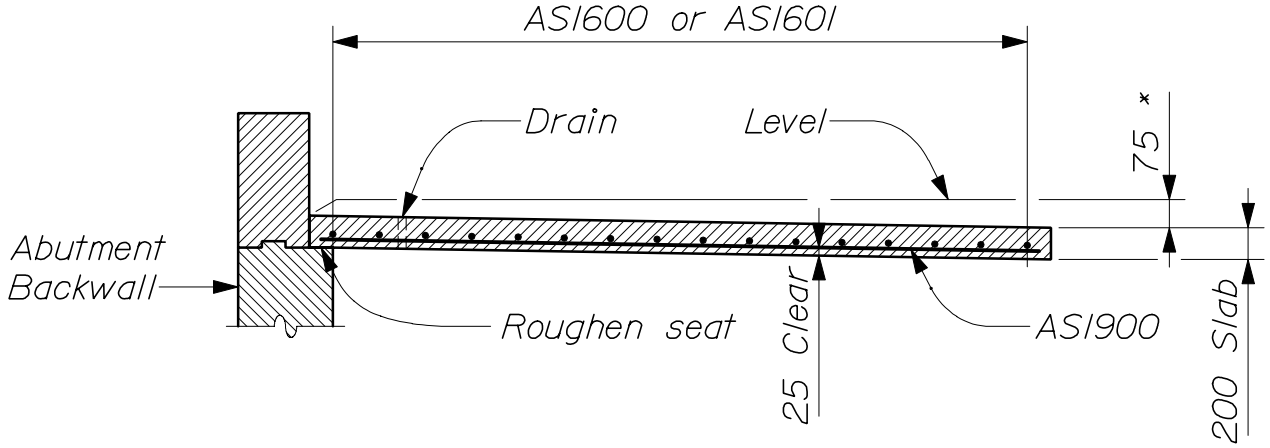

* or match roadway grade, whichever is greater

-- SECTION --

CONCRETE APPROACH SLAB

502(04)

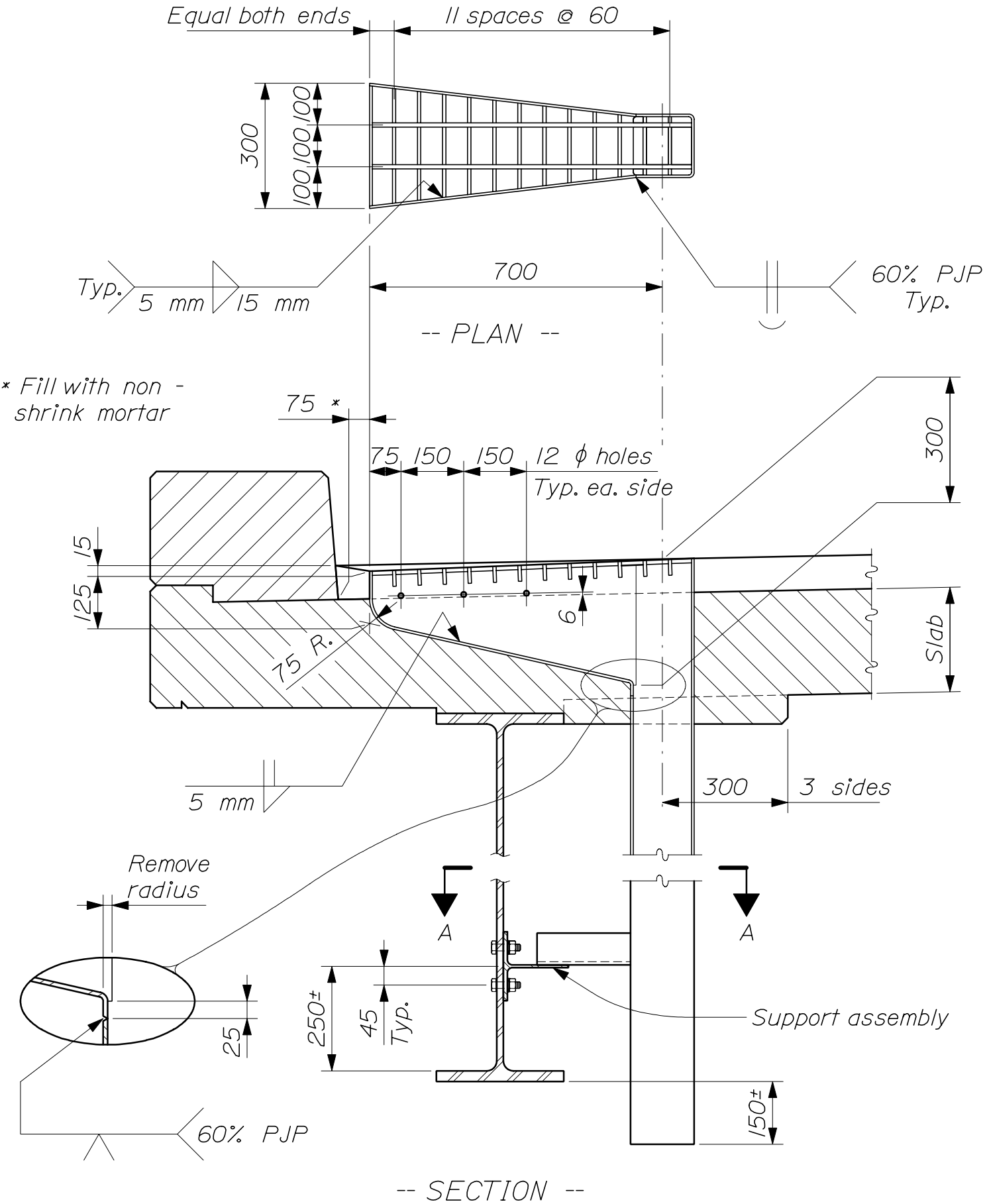

STANDARD BRIDGE DRAIN

502(05)

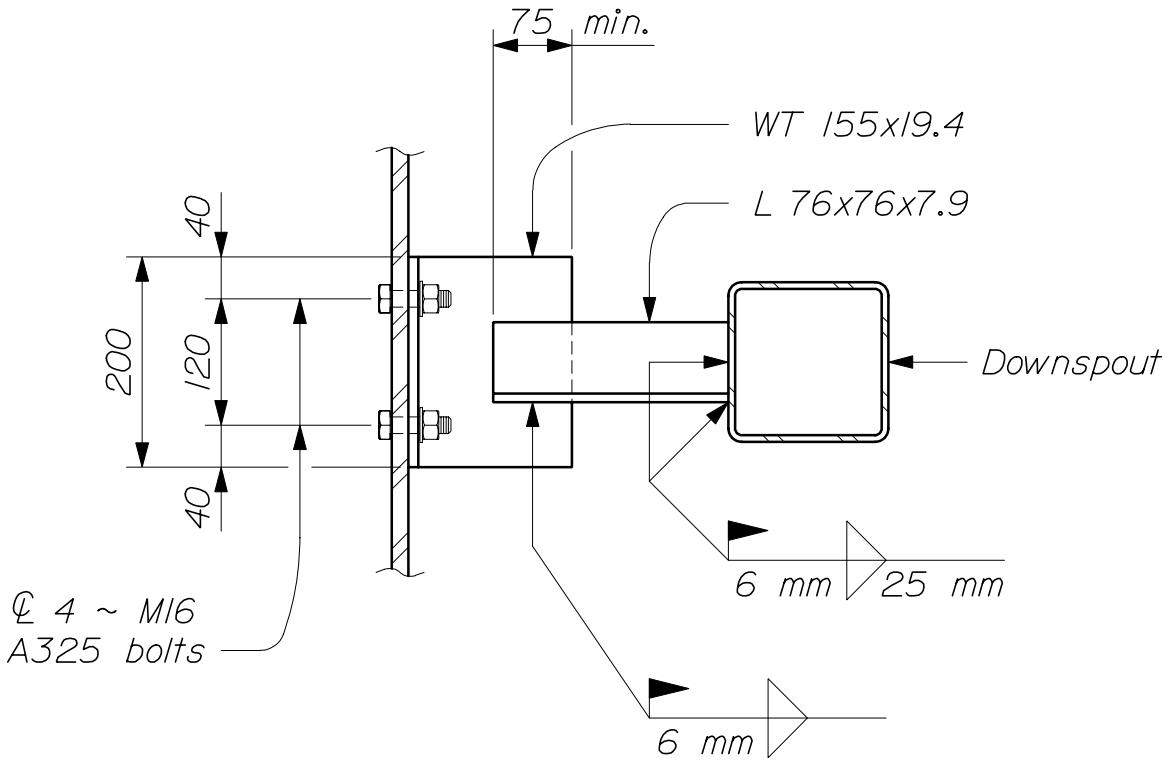

-- SECTION A - A --

NOTES:

1. All plates shall be 6 mm thick and shall conform to AASHTO M183M/M183 (ASTM A 36/ A36M).

2. The downspout shall be a TS 152x152x6.4 conforming to ASTM A500.

3. At the option of the Contractor, a 150 mm ϕ Schedule 40 steel pipe may be substituted for the TS 152x152x6.4 downspout.

4. Grating shall be a commercial heavy - duty grating with 38 x 8 mm bearing bars and 10 mm ϕ cross bars.

5. The 12 mm ϕ holes are not required when a concrete wearing surface is specified.

6. If the minimum thickness of concrete below the drain is 50 mm or less, the concrete haunch shall be extended as shown.

7. Payment for bridge drains will be as specified under Subsection 502.19 of the Standard Specifications.

STANDARD BRIDGE DRAIN

502(06)

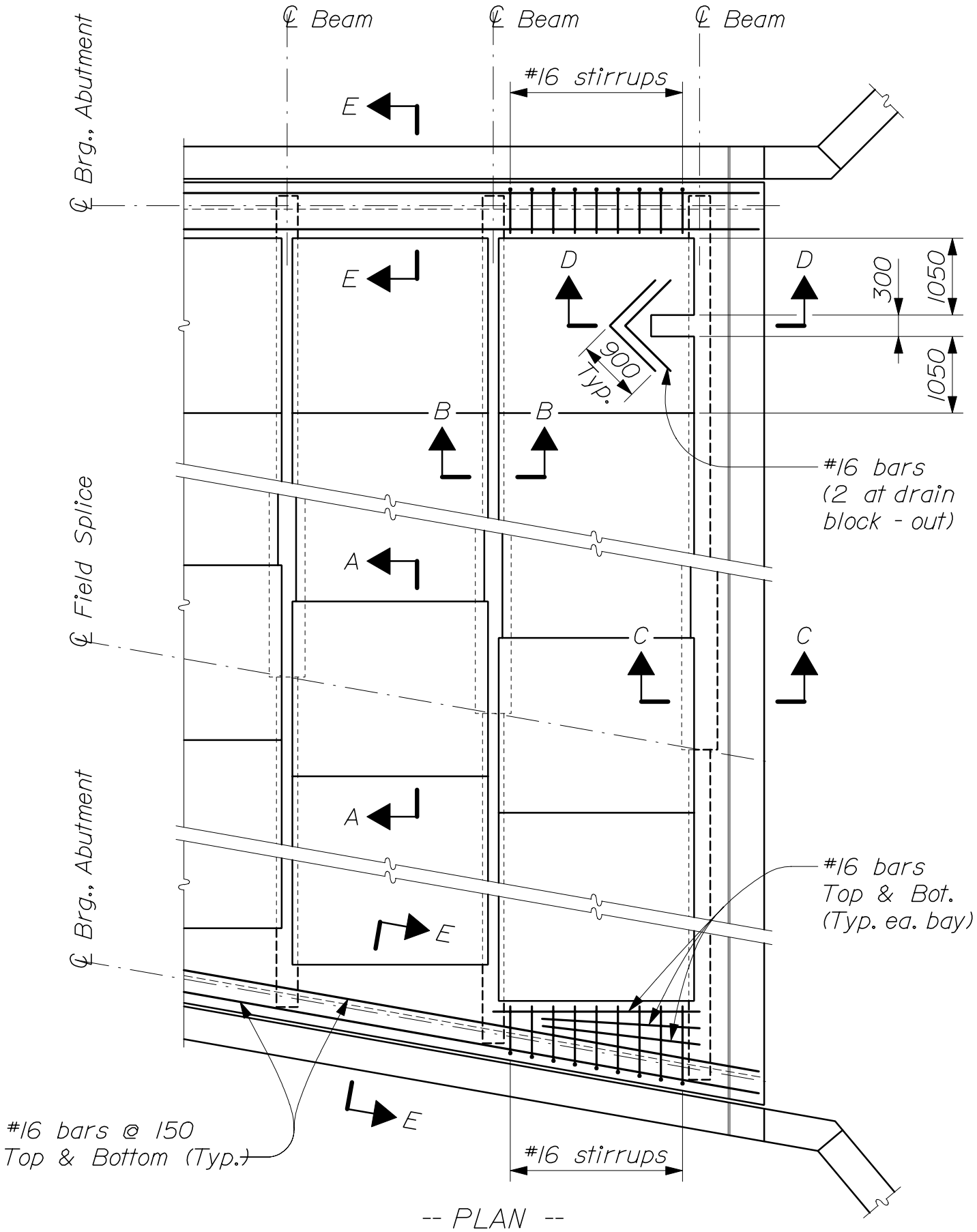

-- PLAN --

PRECAST CONCRETE DECK PANELS

502(07)

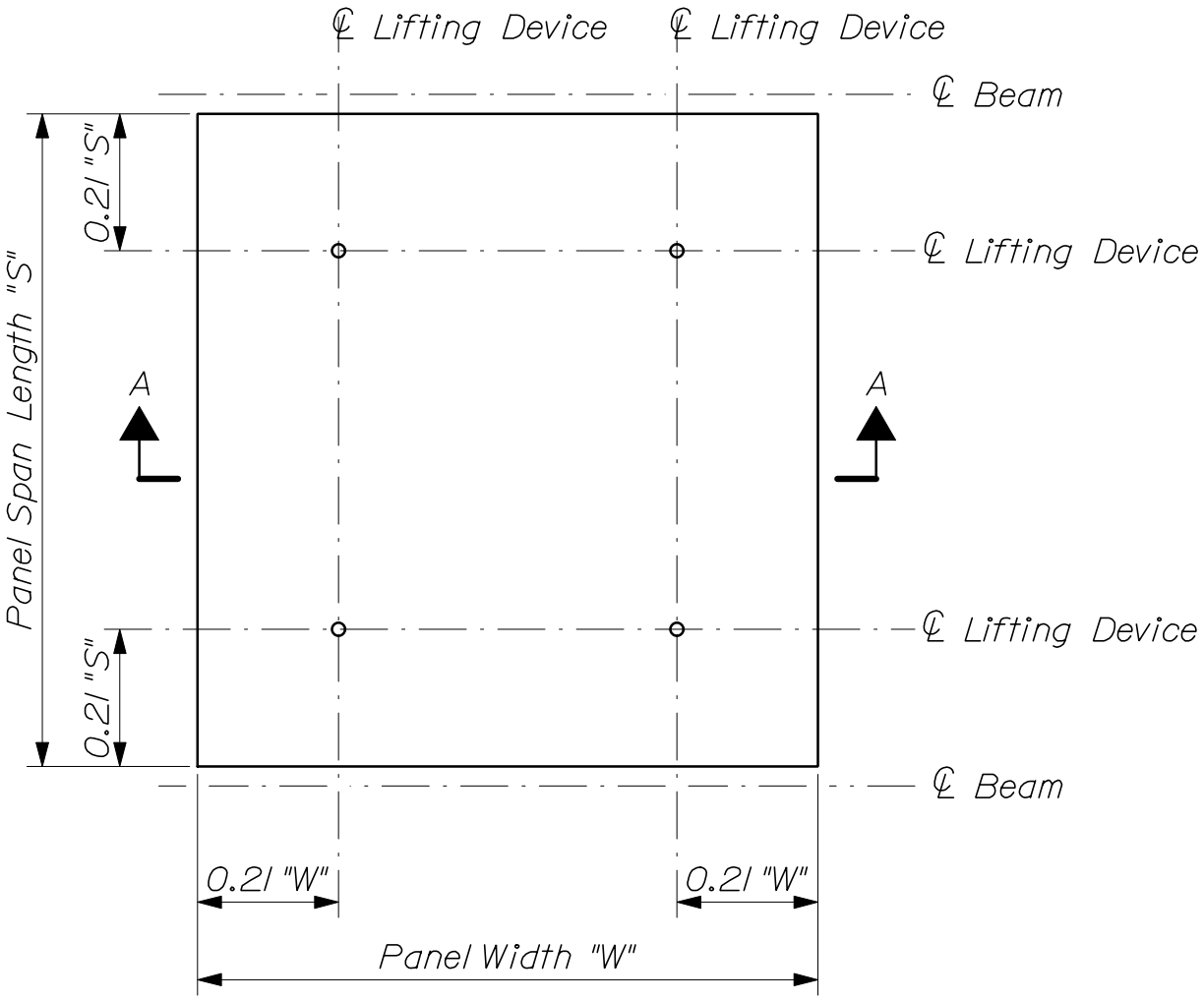

-- PANEL PLAN --

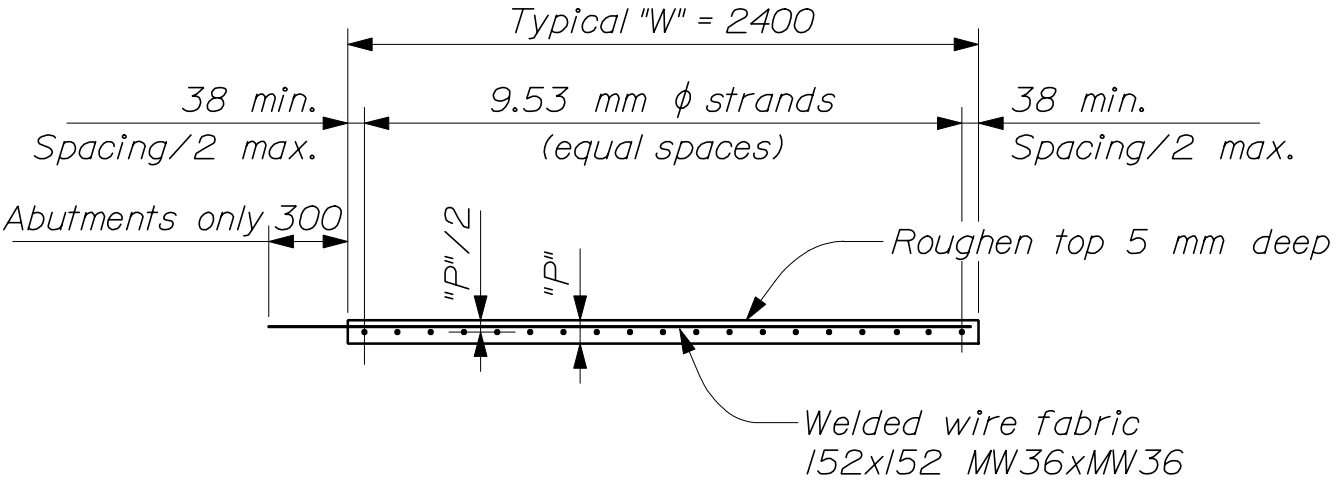

-- SECTION A-A --

PRECAST CONCRETE DECK PANELS

502(08)

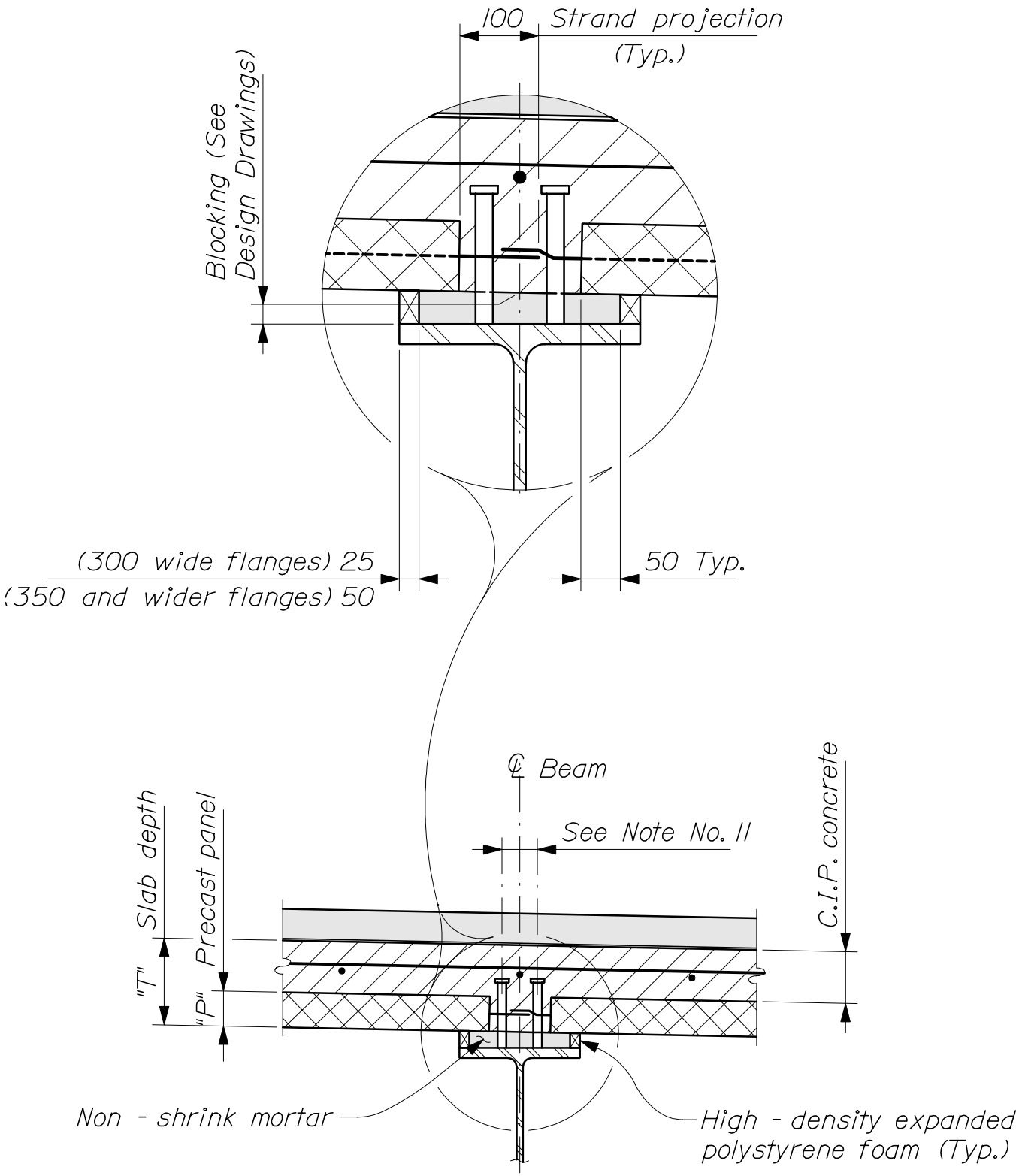

-- SECTION B-B --

PRECAST CONCRETE DECK PANELS

502(09)

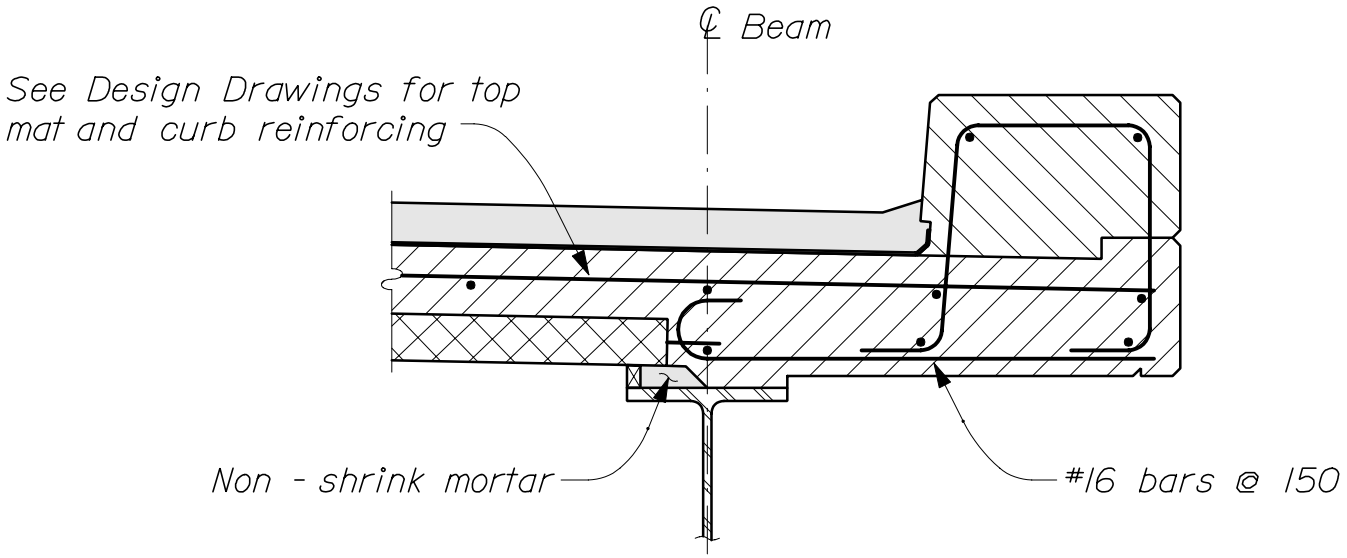

-- SECTION C-C --

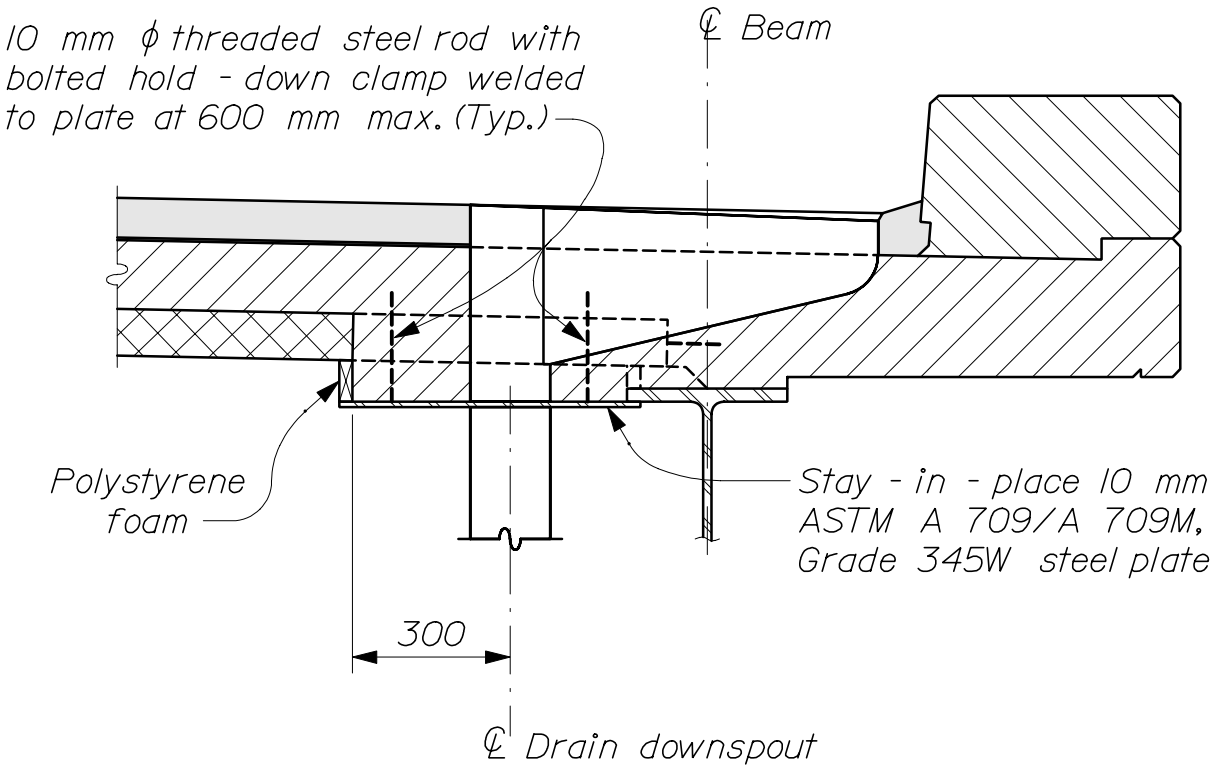

-- SECTION D-D --

PRECAST CONCRETE DECK PANELS

502(10)

DESIGN DIMENSIONS				
Panel Type	Max. "S"	Slab "T"	Panel "P"	Strands Required
MA1	1800	200	90	12
MA2	2000	200	90	14
MA	2175	200	90	16
MB	2350	210	90	17
MC	2525	220	90	19
MD	2700	230	90	20
ME	2875	240	90	22

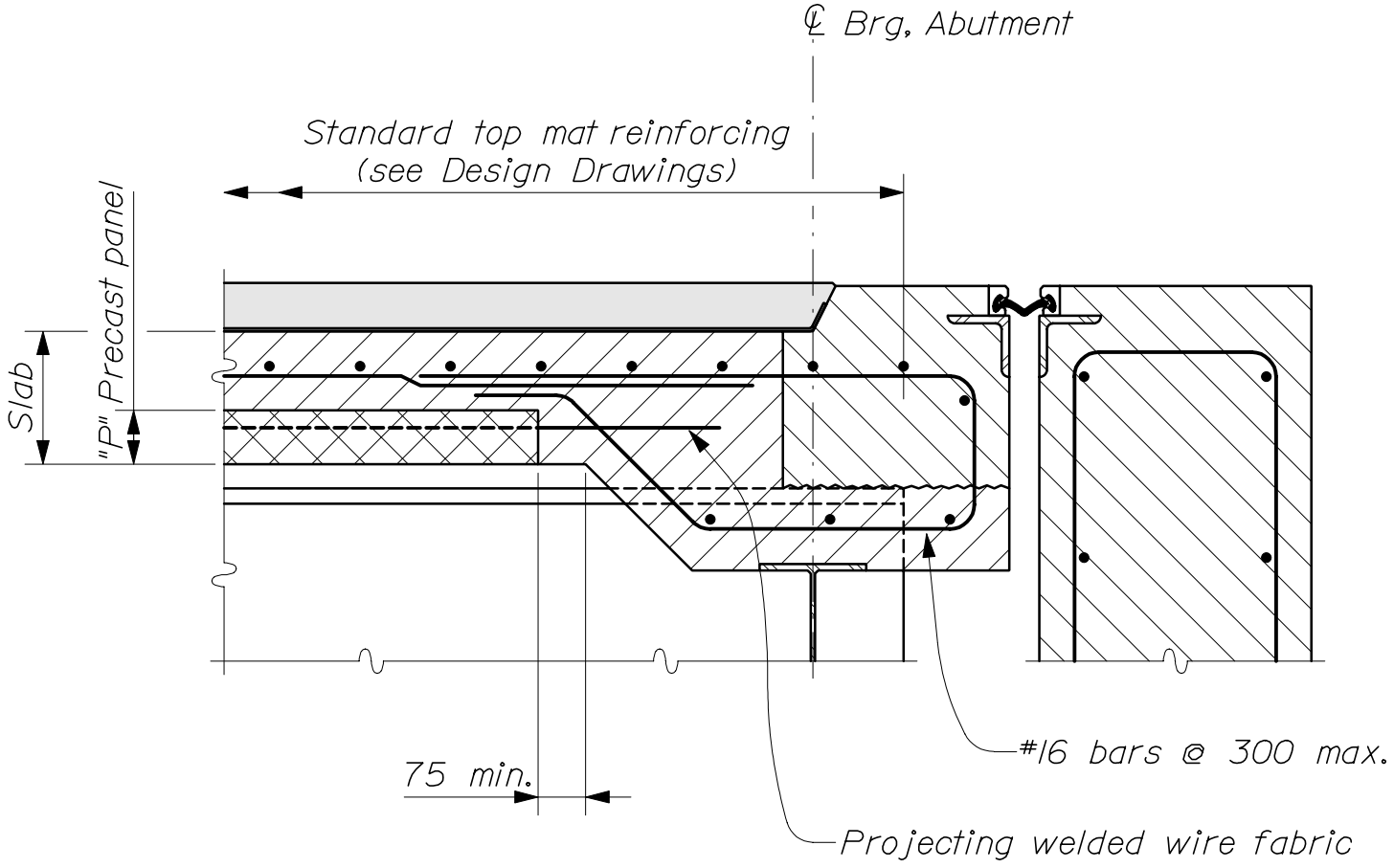

-- SECTION E-E --

PRECAST CONCRETE DECK PANELS

502(11)

NOTES:

1. Concrete for panels shall have a minimum 28 day compressive strength of 34.5 MPa and a minimum release strength of 27.6 MPa.

2. Prestressing strands shall be 9.53 mm diameter Grade 270 seven - wire low relaxation strands conforming to the requirements of ASTM A 416. Initial tension shall be 76.5 kN per strand.

3. Welded wire fabric shall conform to the requirements of ASTM A 497. A mat of #10 reinforcing bars spaced at 150 mm O.C. in each direction may be substituted for welded wire fabric.

4. Mortar to be used for support under the deck panels shall have an approved high range water reducing additive.

5. High - density expanded polystyrene foam shall be cut in the field to the required thickness.

6. When flange thicknesses differ or flange cover plates are used, the temporay blocking thickness shall vary. Precast panels shall align vertically to within 6 mm.

7. Panel widths of less than 2400 mm may be used. Provide strands in the ratio of the smaller panel width to 2400, multiplied by the number of strands given in the table, rounding up to the next even number of strands. The minimum panel with is 925 mm.

8. Refer to the Design Drawings for structures with curved beams or angled splices.

9. The contractor shall submit working drawings showing the exact layout of panel types and sizes.

10. Joints at expansion piers shall be treated similarly to the abutment joint details.

11. Where 300 mm wide girder flanges are specified on the Design Drawings, the transverse shear connector spacing shall be 90 mm rather than the standard 150 mm spacing.

12. Precast deck panels require the use of 175 mm long shear connectors rather than the standard 125 mm length. Payment for any additional costs will be considered incidental to the precast deck panel pay item.

13. The specific reinforcing steel layout for the cast - in - place portions of the slab shall be as shown on the Design Drawings.

14. If there is a conflict between these Standard Details and the Design Drawings, the requirements of the Design Drawings shall be followed.

PRECAST CONCRETE DECK PANELS

502(12)

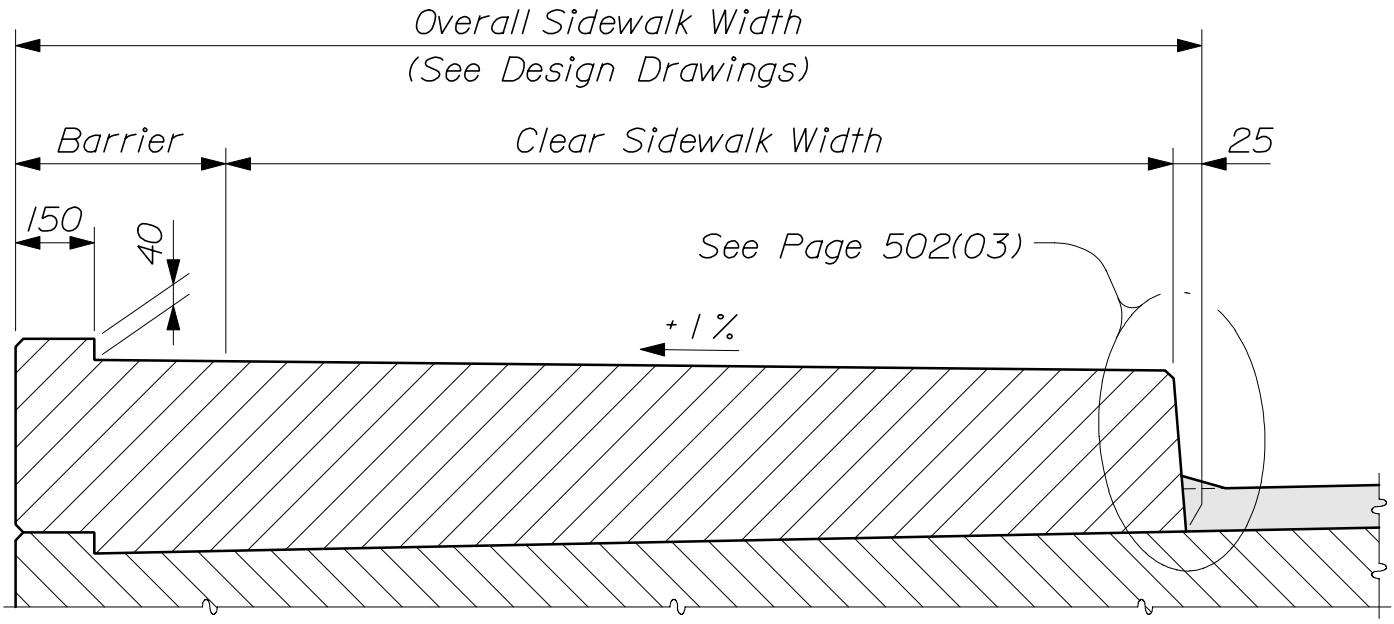

-- WITH PERMANENT CONCRETE BARRIER --

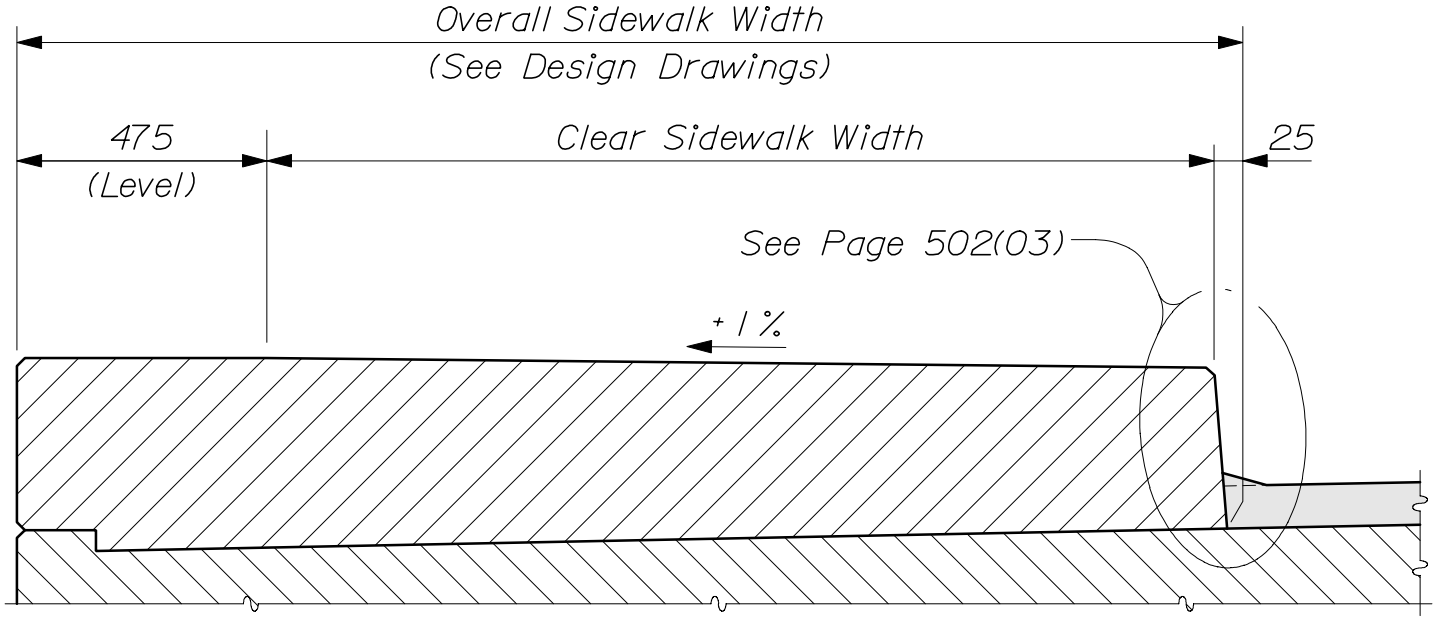

-- WITH STEEL BRIDGE RAILING --

CONCRETE SIDEWALK ON BRIDGES

502(13)

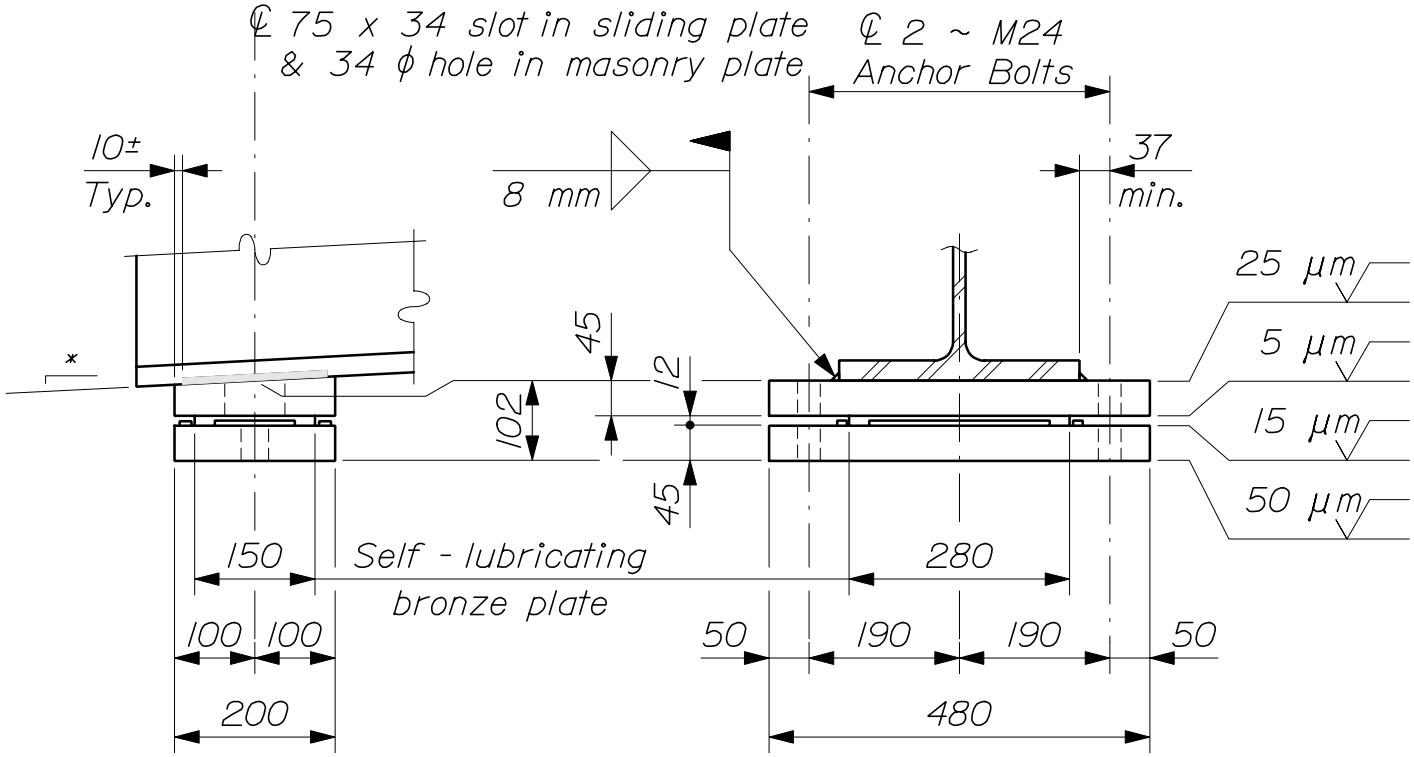

-- EXPANSION PEDESTAL ~ M-EPA --

* Match Profile grade
(See Design Drawings)

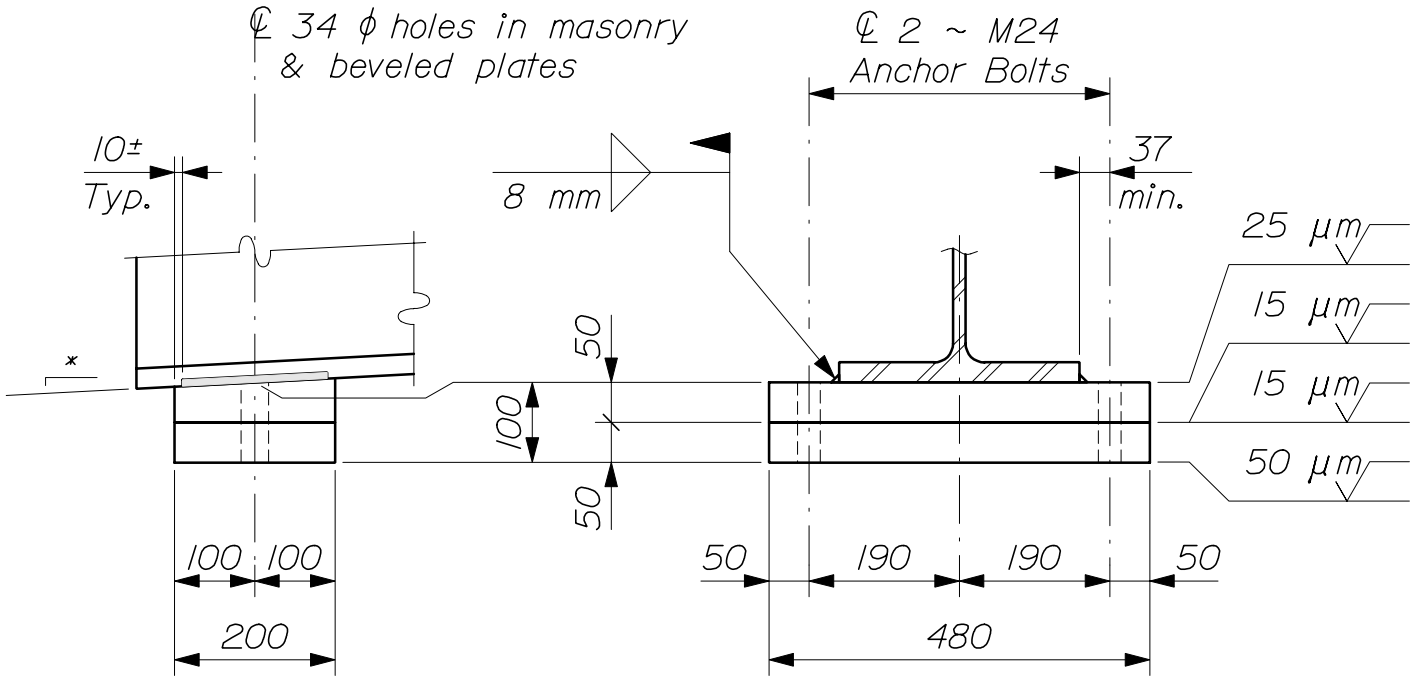

-- FIXED PEDESTAL ~ M-FPA --

SLIDING BEARING PEDESTALS

504(01)

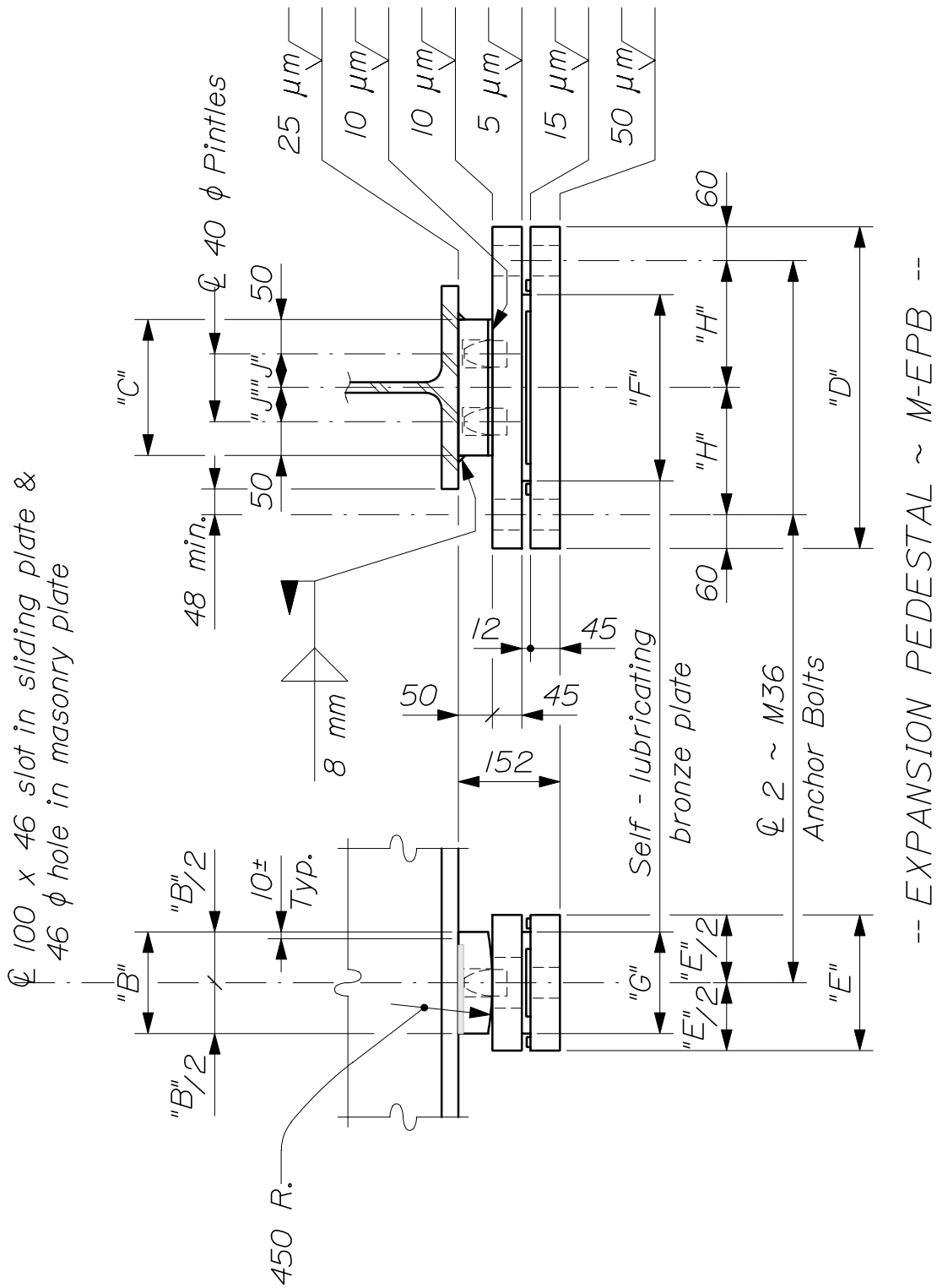

SLIDING BEARING PEDESTALS

504(02)

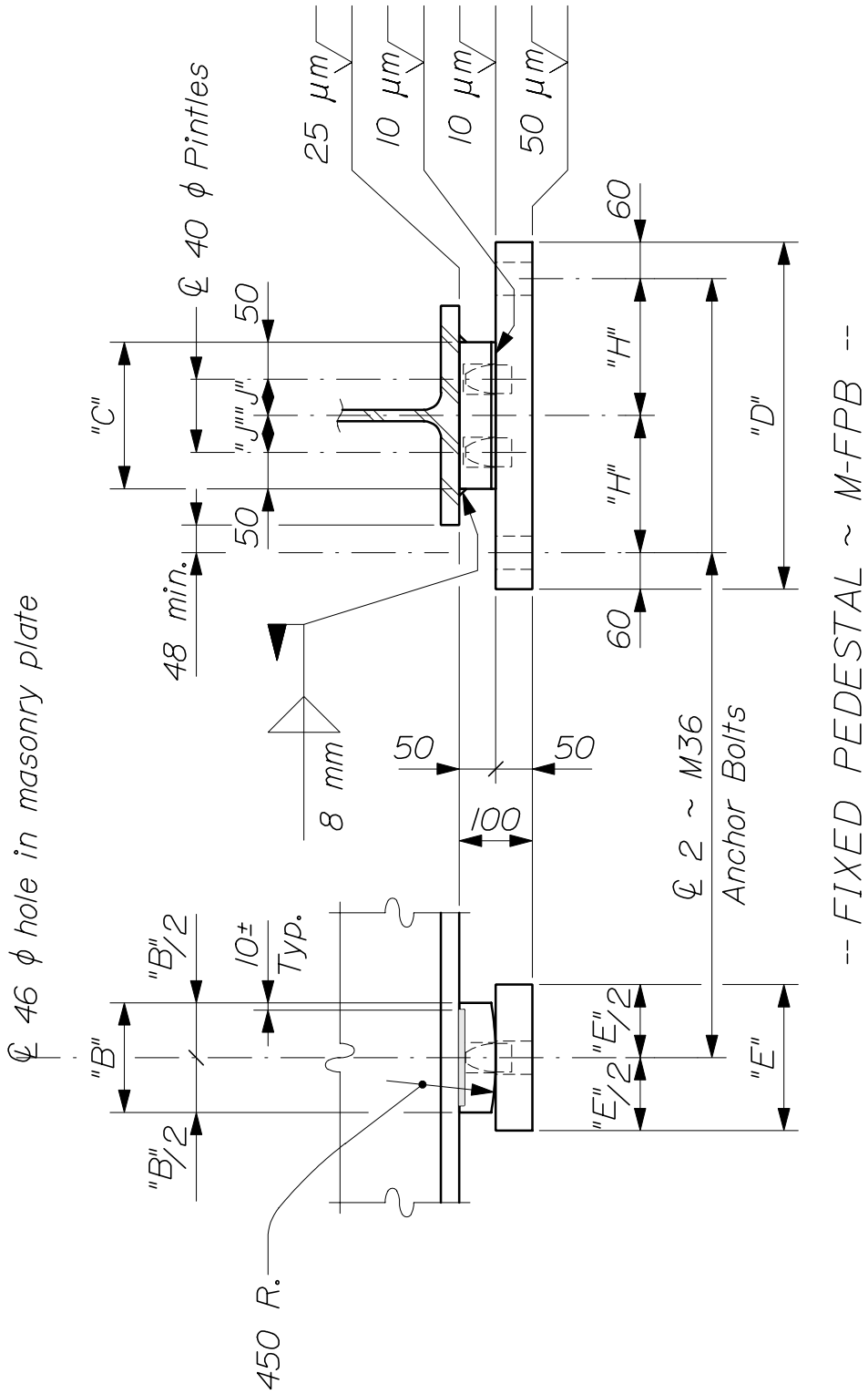

SLIDING BEARING PEDESTALS

504(03)

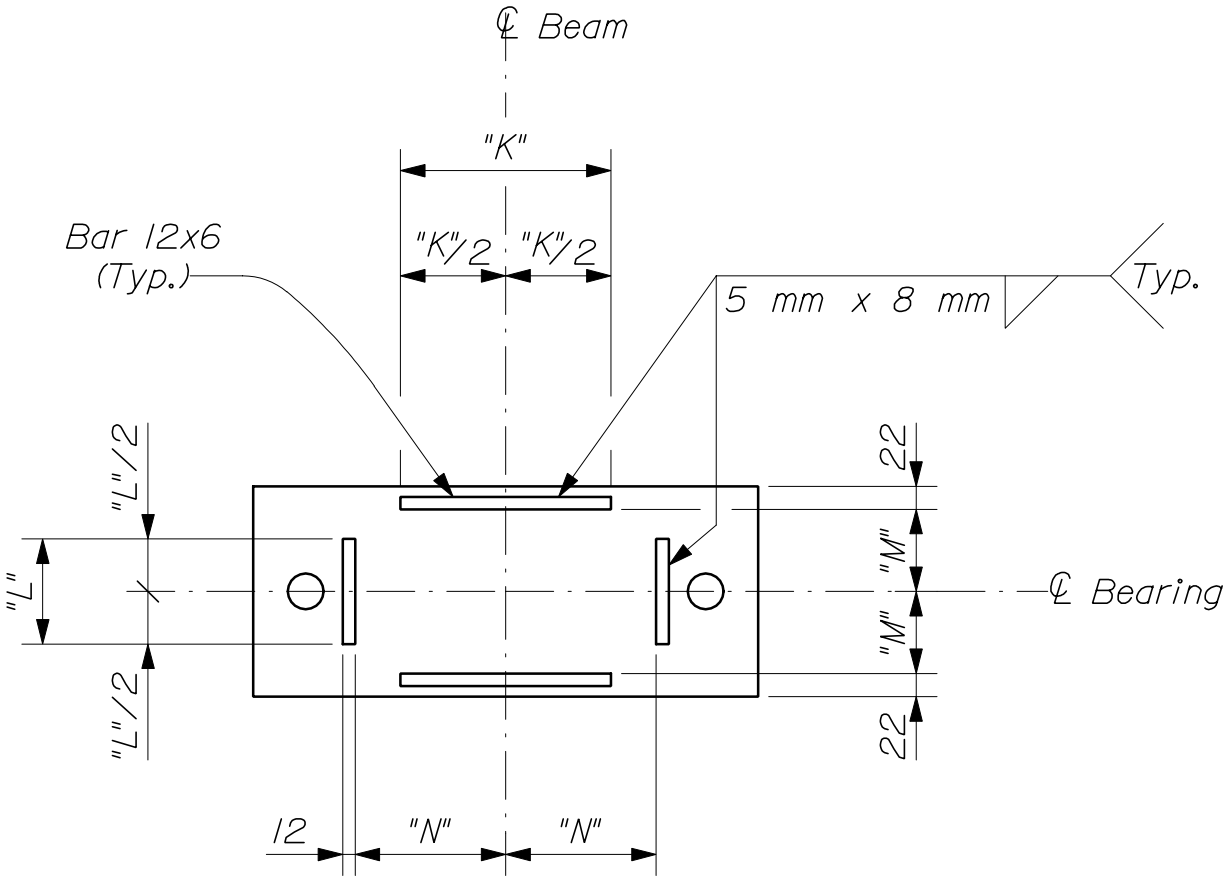

-- MASONRY PLATE --
(for M-EPA & M-EPB)

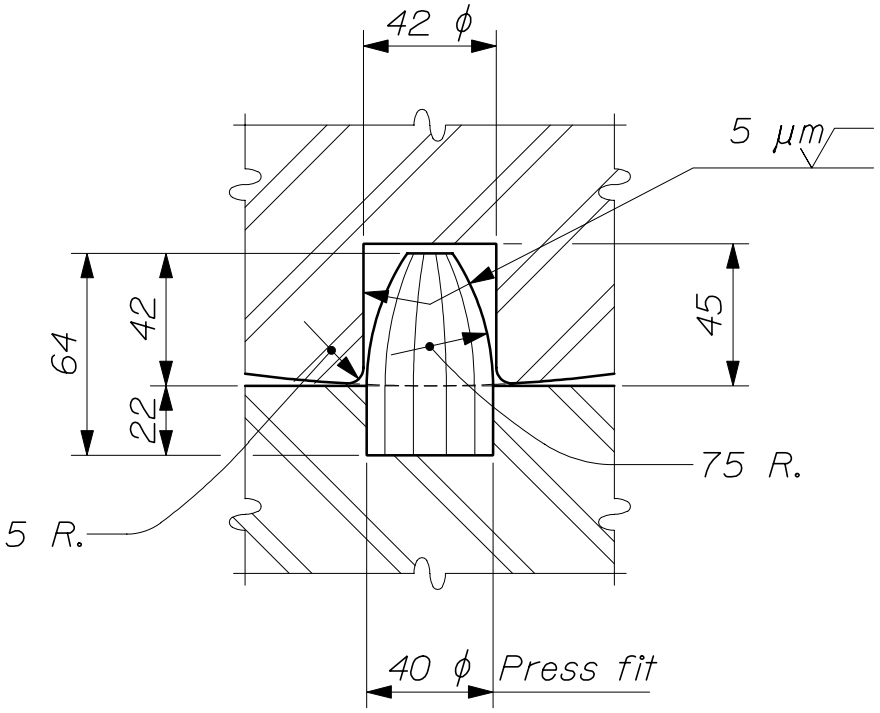

-- 40 ϕ PINTLE --

SLIDING BEARING PEDESTALS

504(04)

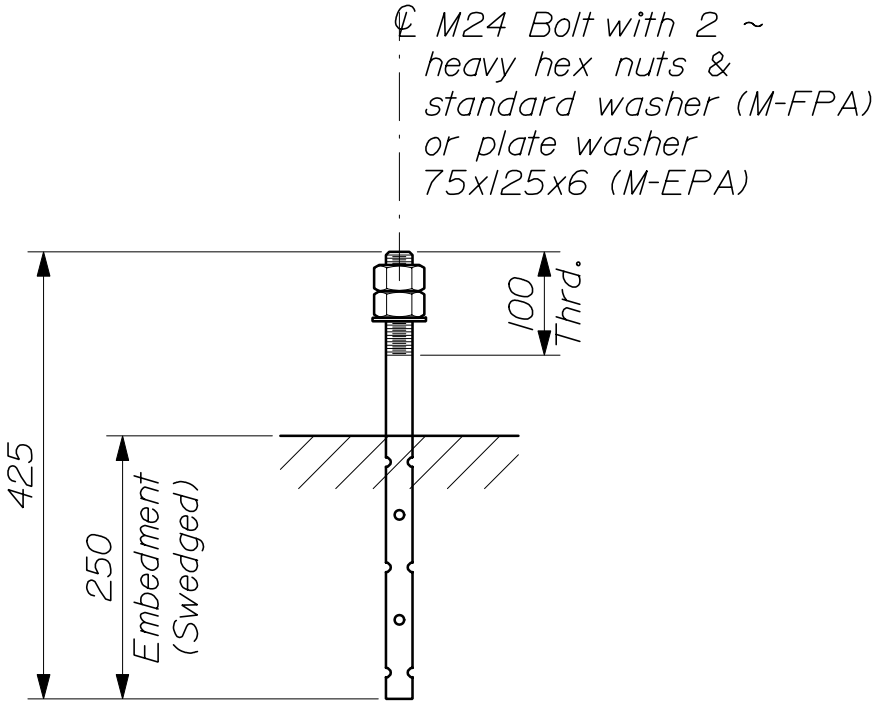

-- M-EPA & M-FPA ANCHOR BOLT --

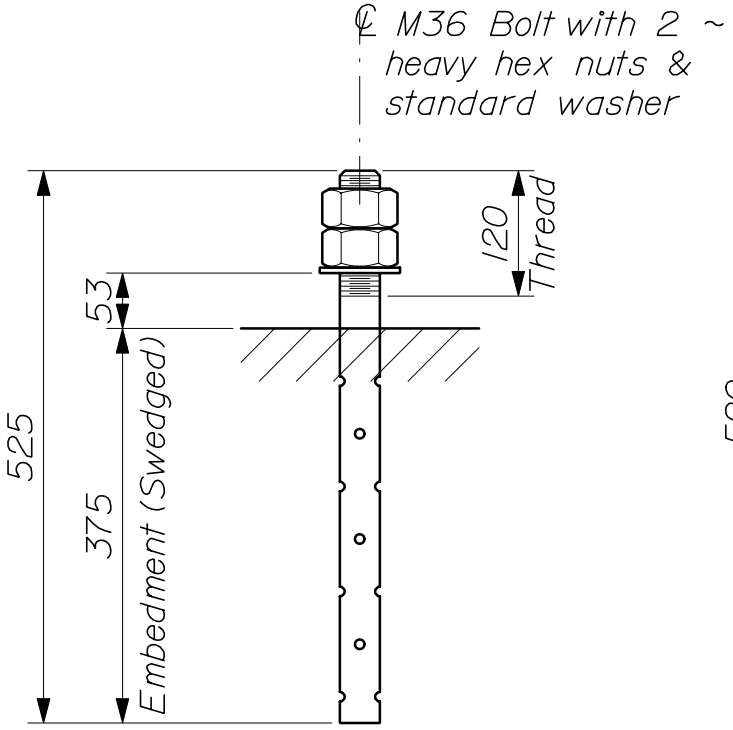

-- M-FPB ANCHOR BOLT --

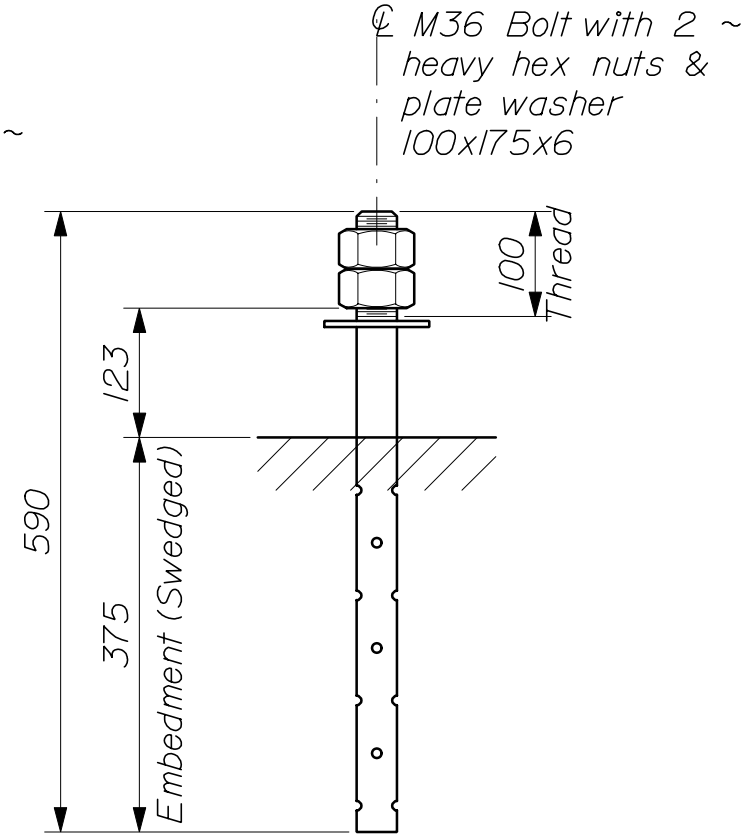

-- M-EPB ANCHOR BOLT --

SLIDING BEARING PEDESTALS

504(05)

TABLE OF DIMENSIONS												
Mark	"B"	"C"	"D"	"E"	"F"	"G"	"H"	"J"	"K"	"L"	"M"	"N"
M-EPA	--	--	--	--	--	--	--	--	200	100	78	143
M-FPA	--	--	--	--	--	--	--	--	--	--	--	--
M-EPB-1	150	200	500	200	250	150	190	50	200	100	78	128
M-EPB-2	176	250	520	226	300	175	200	75	250	126	91	153
M-EPB-3	200	330	620	250	400	200	250	115	350	126	103	203
M-FPB-1	150	200	500	200	--	--	190	50	--	--	--	--
M-FPB-2	176	250	520	226	--	--	200	75	--	--	--	--
M-FPB-3	200	350	620	250	--	--	250	125	--	--	--	--

ALLOWABLE LOADS					
Mark	Load	Mark	Load	Mark	Load
M-EPA	585 kN	M-EPB-1	535 kN	M-FPB-1	535 kN
M-FPA	665 kN	M-EPB-2	735 kN	M-FPB-2	735 kN
		M-EPB-3	1110 kN	M-FPB-3	1110 kN

NOTES:

1. Charpy V - notch tests are not required for steel used in bearing pedestals.

2. Bearing pedestals for use with painted structural steel shall be painted to conform to Subsection 504.36 of the Standard Specifications.

3. Upset the threads on the anchor bolts after assembly.

MATERIALS:

With unpainted structural steel -
All steel (including anchor bolts)..... ASTM A709/A709M, Grade 345W
Heavy hex nuts for anchor bolts..... ASTM A563M, Class 8S3 or 10S3

With painted structural steel -
All steel (including anchor bolts)..... ASTM A709/A709M, Grade 345 or
ASTM A709/A709M, Grade 345W
Heavy hex nuts for anchor bolts..... ASTM A563M, Class 5

SLIDING BEARING PEDESTALS

504(06)

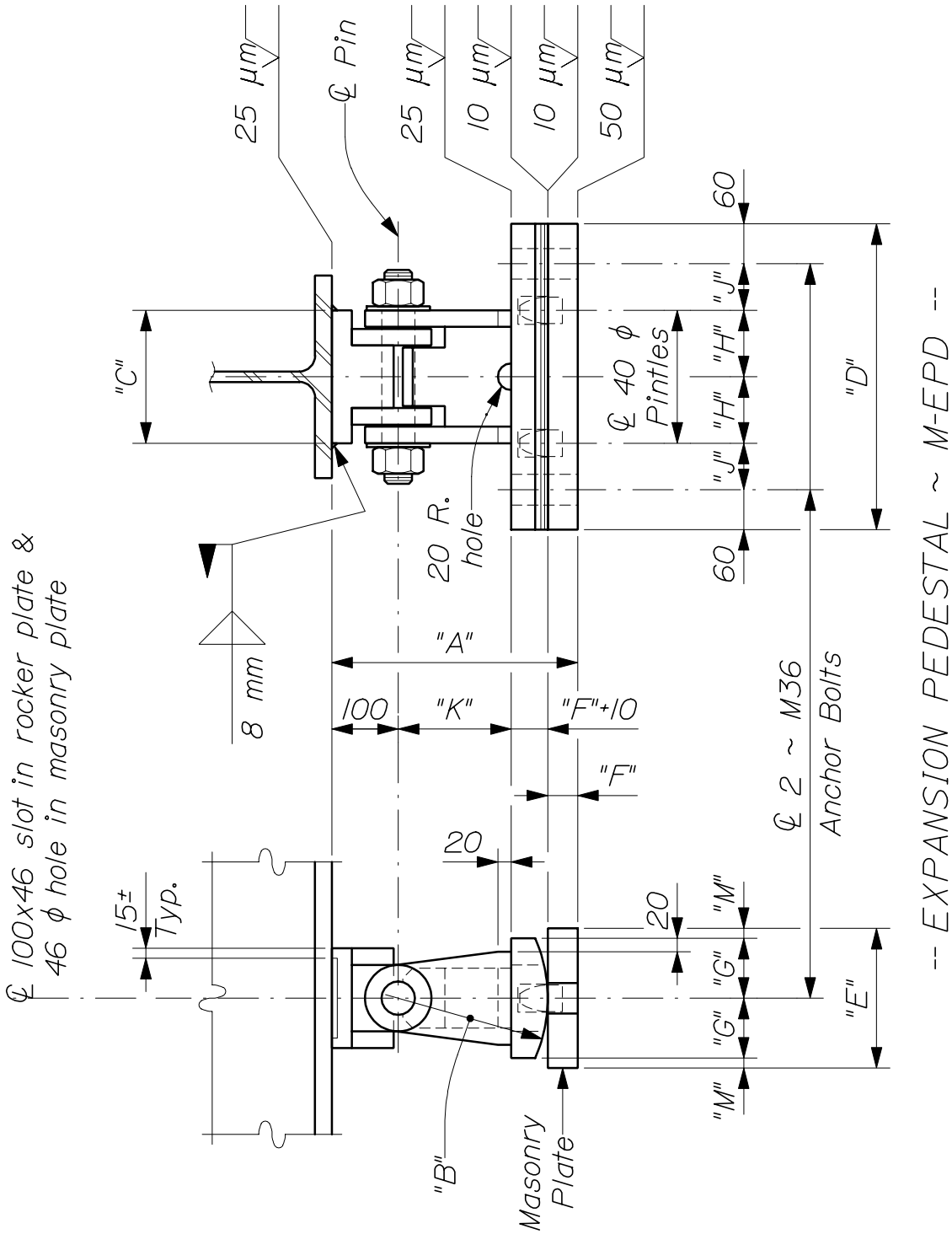

ROCKER BEARING PEDESTALS

504(07)

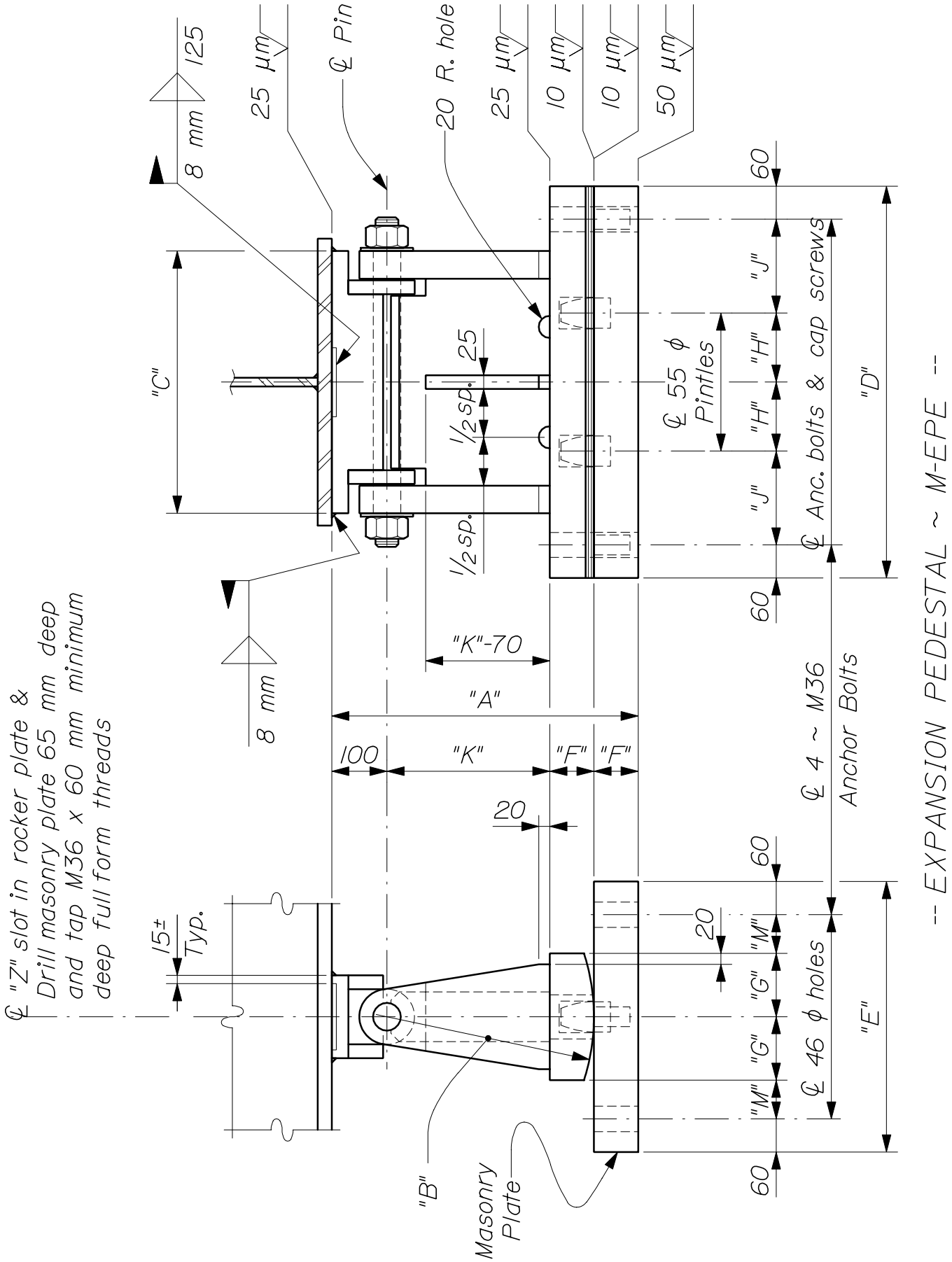

ROCKER BEARING PEDESTALS

504(08)

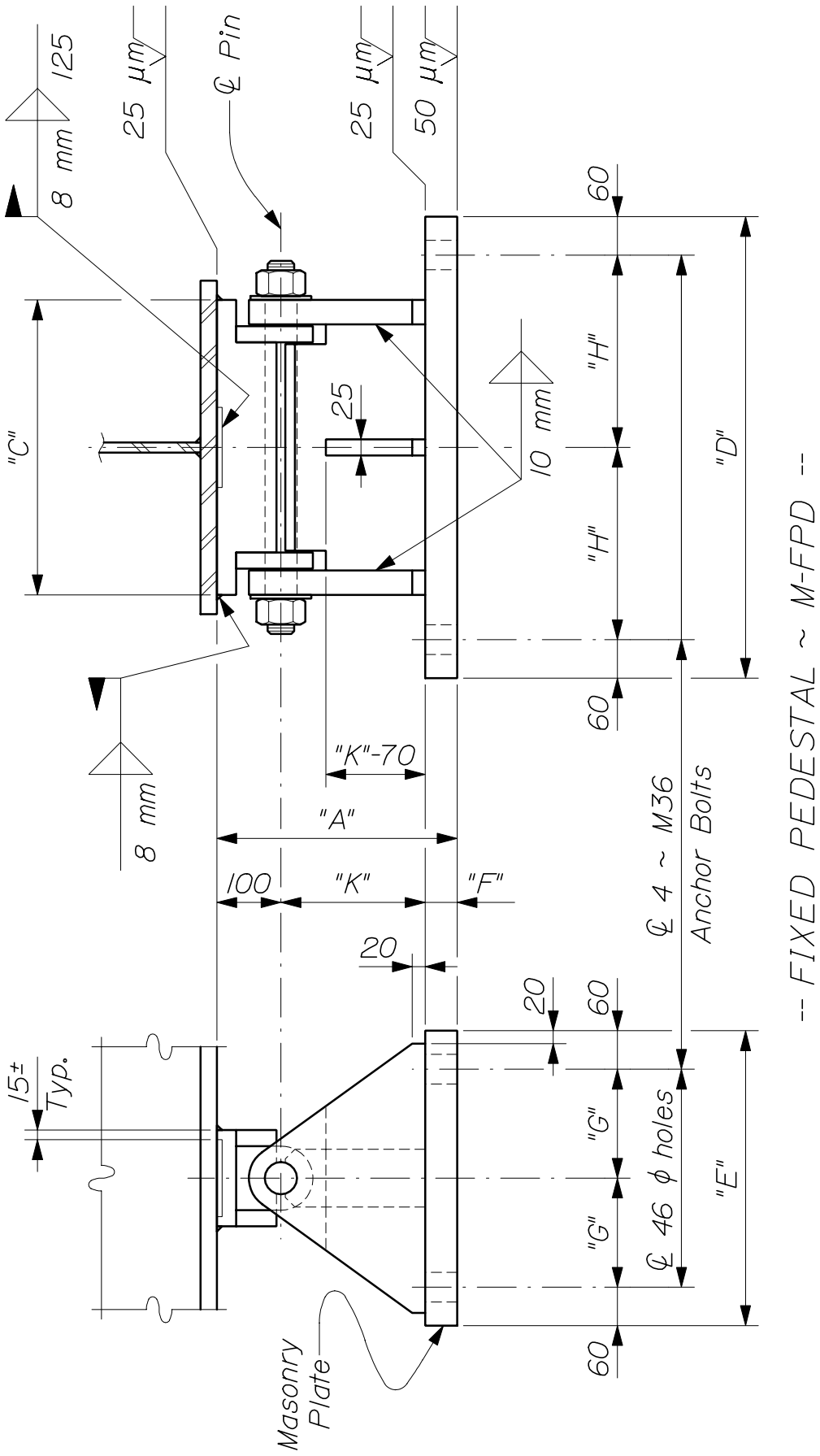

ROCKER BEARING PEDESTALS

504(09)

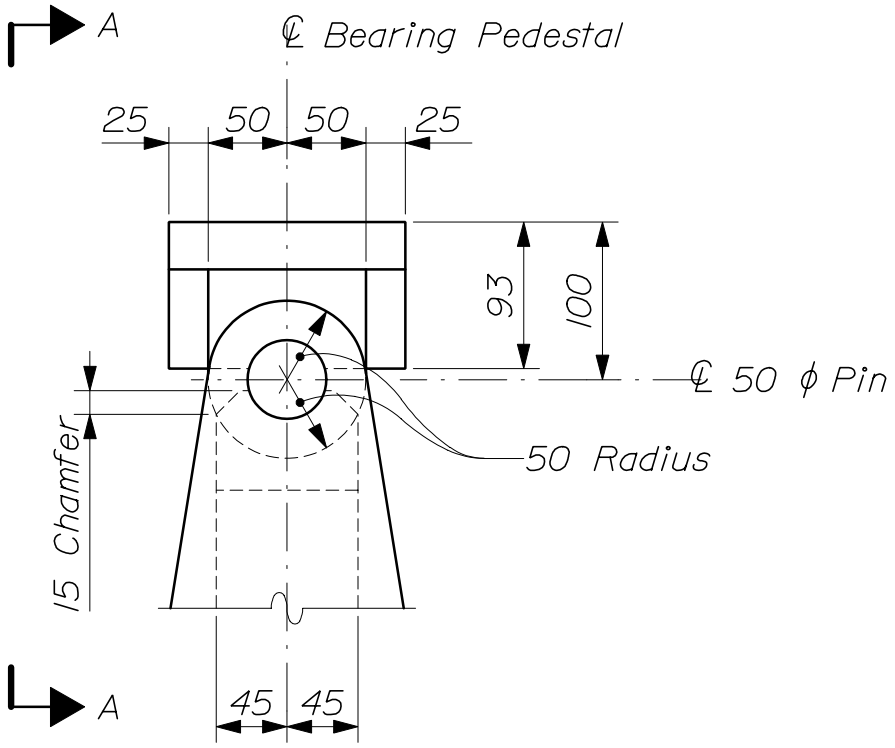

-- SOLE PLATE DETAIL --

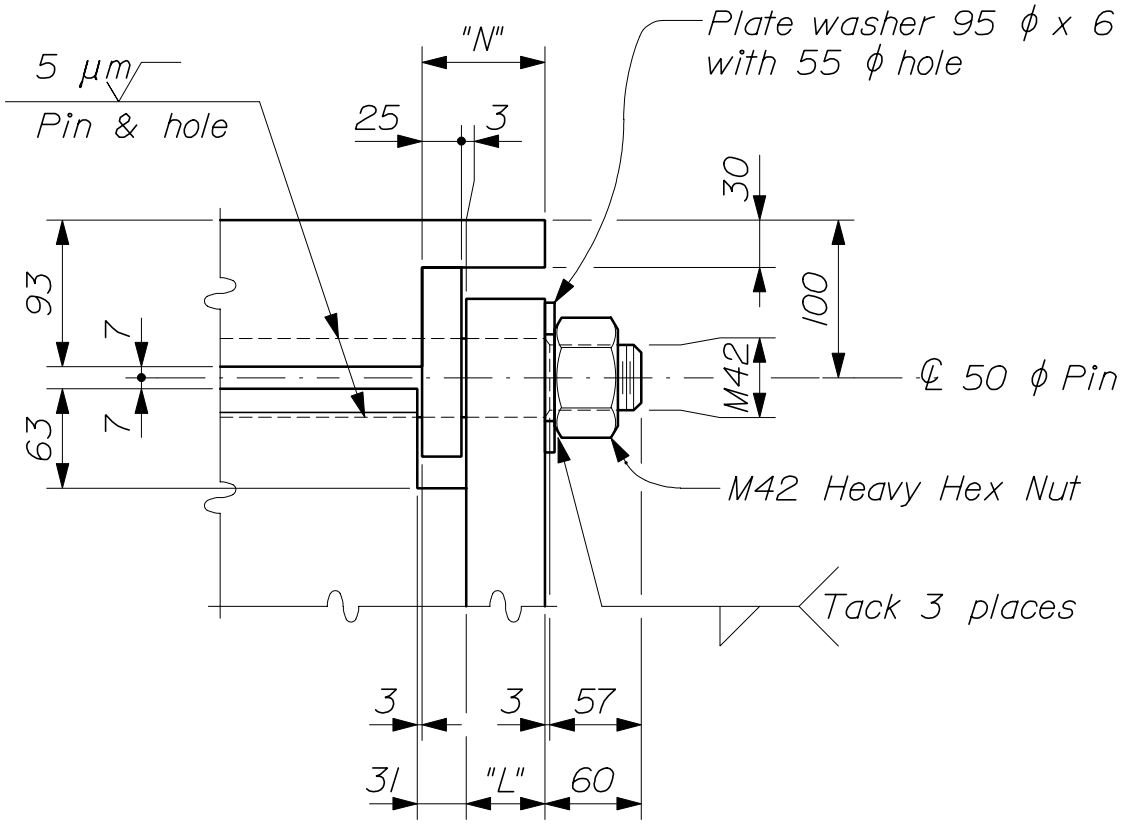

-- VIEW A - A --

ROCKER BEARING PEDESTALS

504(10)

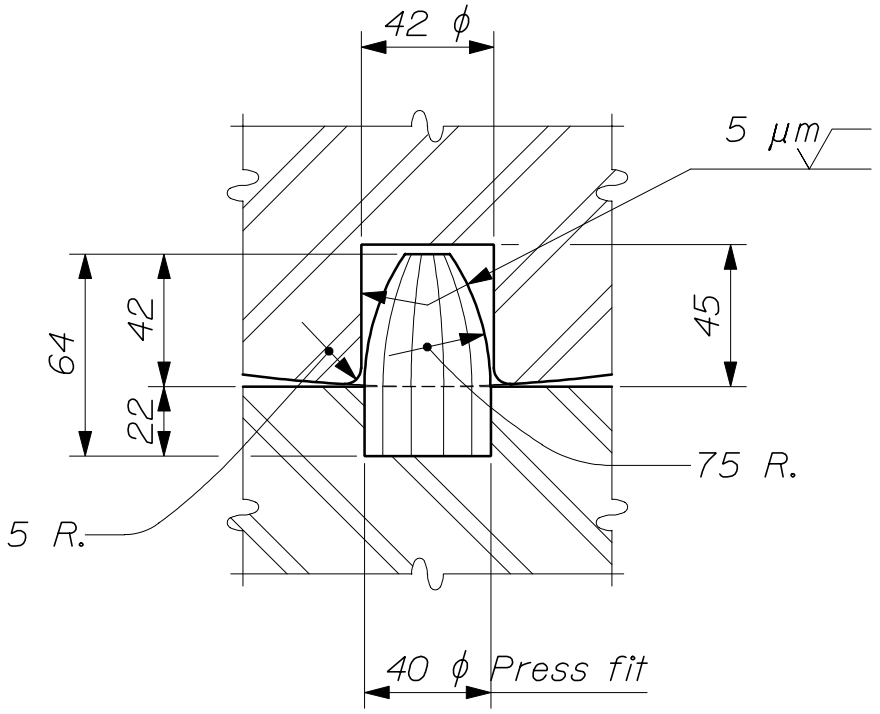

-- 40 ϕ PINTLE --

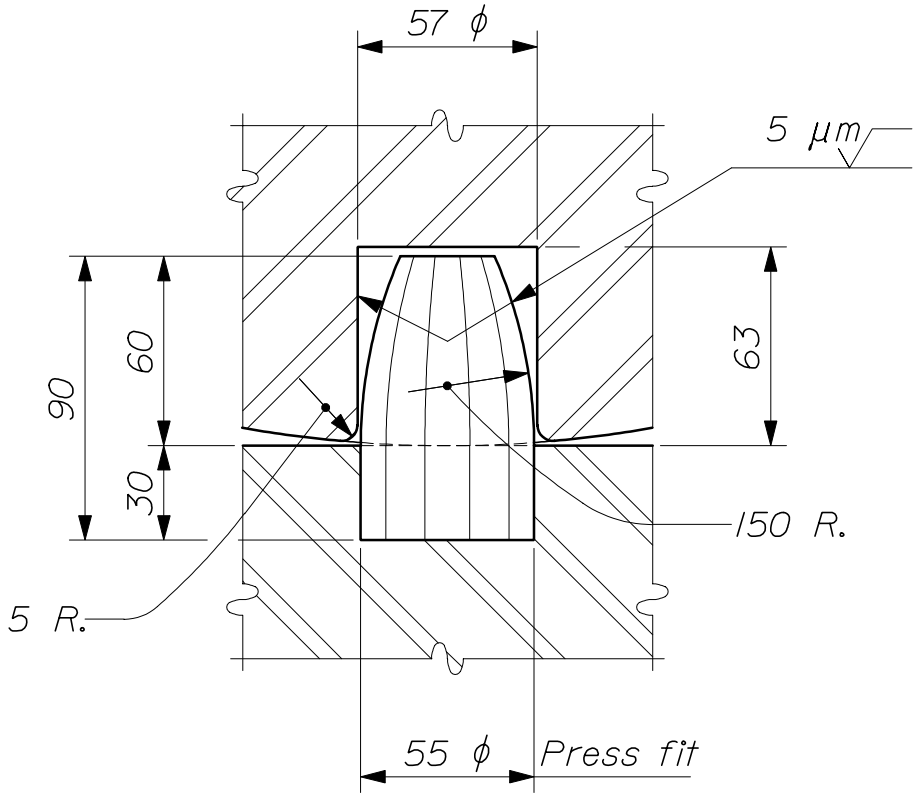

-- 55 ϕ PINTLE --

ROCKER BEARING PEDESTALS

504(11)

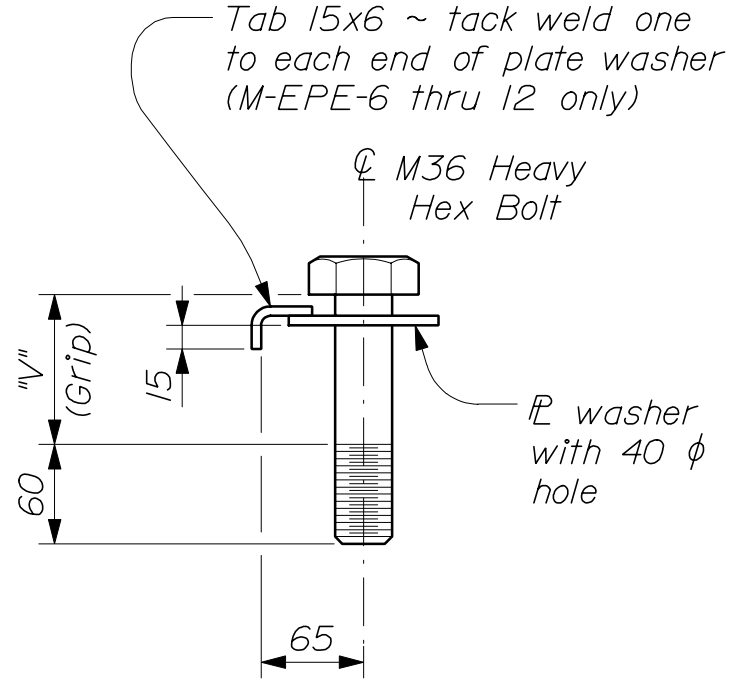

-- M-EPE CAP SCREW DETAIL --

CAP SCREW, "Z" SLOT & PLATE WASHER DIMENSIONS			
Mark	"V"	"Z" slot	℗ washer
M-EPE-1	95	80x40	95x105x6
M-EPE-2	100	80x40	95x120x6
M-EPE-3	125	105x40	95x155x6
M-EPE-4	135	120x40	95x170x6
M-EPE-5	160	145x40	95x220x6
M-EPE-6	100	80x40	95x105x6
M-EPE-7	135	120x40	95x170x6
M-EPE-8	170	155x40	95x245x6
M-EPE-9	125	105x40	105x145x6
M-EPE-10	170	155x40	105x245x6
M-EPE-11	130	115x40	105x165x6
M-EPE-12	170	155x40	105x245x6

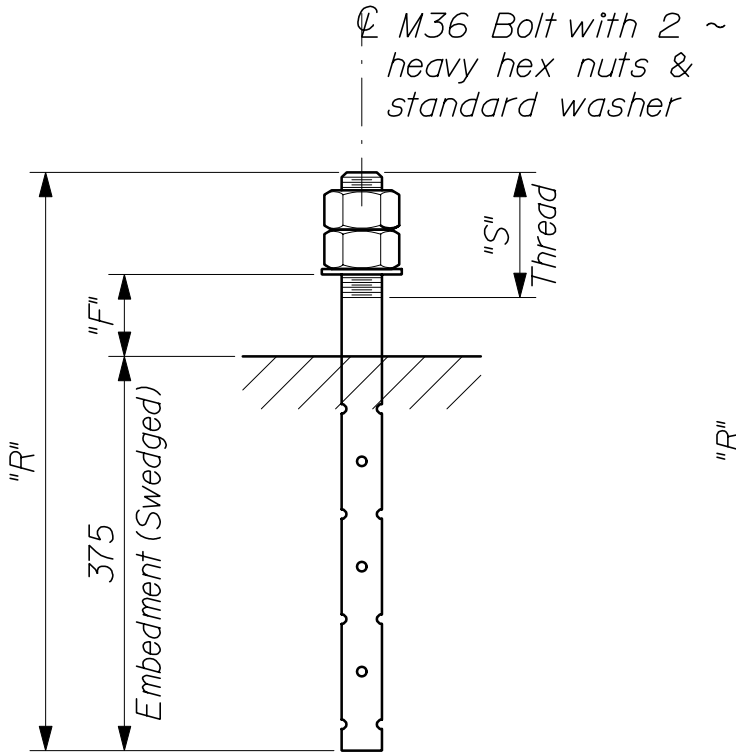

-- M-EPE & M-FPD ANCHOR BOLT --

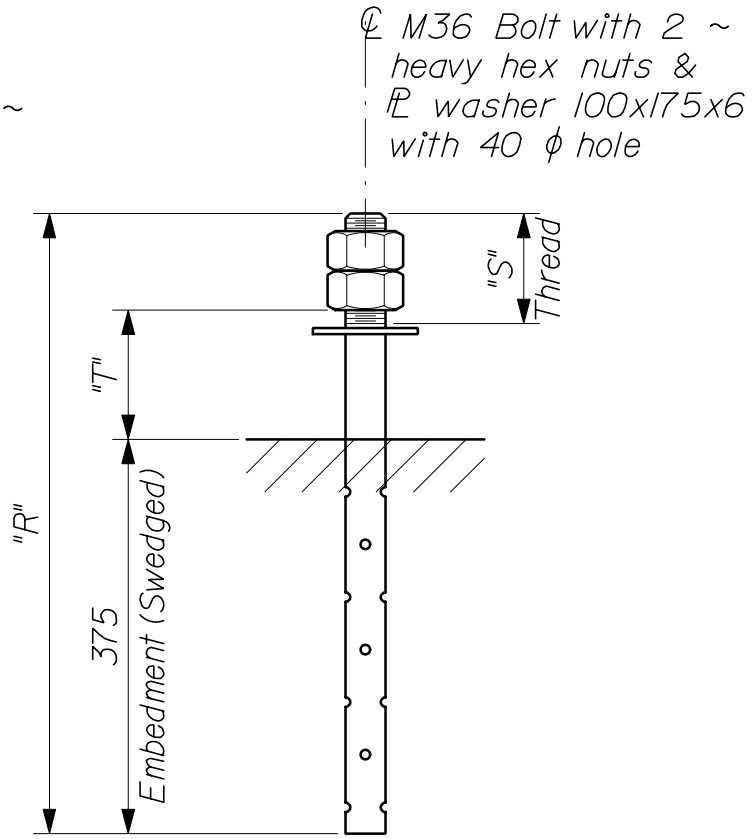

-- M-EPD ANCHOR BOLT --

ROCKER BEARING PEDESTALS

504(12)

ROCKER BEARING PEDESTALS

504(13)

TABLE OF DIMENSIONS														ANC. BOLTS		
Mark	"A"	"B"	"C"	"D"	"E"	"F"	"G"	"H"	"J"	"K"	"L"	"M"	"N"	"R"	"S"	"T"
M-EPD-1	370	225	200	460	210	45	90	100	70	170	25	15	53	590	110	125
M-EPD-2	370	225	200	460	240	45	105	100	70	170	25	15	53	590	110	125
M-EPD-3	370	225	200	460	260	45	115	100	70	170	25	15	53	590	110	125
M-EPD-4	445	300	200	460	290	45	130	100	70	245	25	15	53	590	110	125
M-EPD-5	535	375	275	540	290	60	130	115	95	305	32	15	60	620	120	150
M-EPD-6	535	375	275	540	310	60	140	115	95	305	32	15	60	630	120	160
M-EPD-7	535	375	275	540	340	60	155	115	95	305	32	15	60	630	120	160
M-EPD-8	535	375	275	540	360	60	165	115	95	305	32	15	60	630	110	165
M-EPD-9	535	375	275	540	390	60	180	115	95	305	32	15	60	640	110	175
M-EPE-1	555	375	350	590	470	80	105	125	110	295	45	70	73	550	120	--
M-EPE-2	555	375	350	590	520	80	130	125	110	295	45	70	73	550	120	--
M-EPE-3	565	375	350	590	570	90	155	125	110	285	45	70	73	560	120	--
M-EPE-4	565	375	350	590	620	90	180	125	110	285	45	70	73	560	120	--
M-EPE-5	575	375	350	590	700	100	205	125	110	275	45	85	73	570	120	--
M-EPE-6	555	375	475	710	490	80	115	125	170	295	50	70	78	550	120	--
M-EPE-7	575	375	475	710	590	100	165	125	170	275	45	70	73	570	120	--
M-EPE-8	575	375	475	710	730	100	220	125	170	275	45	85	73	570	120	--
M-EPE-9	650	450	575	920	570	100	155	175	225	350	55	70	83	570	120	--
M-EPE-10	660	450	575	920	750	110	230	175	225	340	50	85	78	580	120	--
M-EPE-11	650	450	750	1170	590	100	165	250	275	350	60	70	88	570	120	--
M-EPE-12	660	450	750	1170	750	110	230	250	275	340	55	85	83	580	120	--
M-FPD-1	300	--	200	460	230	50	55	170	--	150	25	--	53	525	120	--
M-FPD-2	300	--	250	510	360	50	120	195	--	150	25	--	53	525	120	--
M-FPD-3	300	--	360	620	410	50	145	250	--	150	32	--	60	525	120	--
M-FPD-4	375	--	460	720	460	50	170	300	--	225	38	--	66	525	120	--
M-FPD-5	375	--	585	920	560	75	220	400	--	200	38	--	66	550	120	--
M-FPD-6	375	--	760	1170	590	75	235	525	--	200	50	--	78	560	120	--

ALLOWABLE LOADS					
Mark	Load	Mark	Load	Mark	Load
M-EPD-1	780 kN	M-EPE-1		M-EPE-11	4450 kN
M-EPD-2	890 kN	thru	2000 kN	M-EPE-12	4450 kN
M-EPD-3	890 kN	M-EPE-5		M-FPD-1	890 kN
M-EPD-4	890 kN	M-EPE-6	2670 kN	M-FPD-2	1340 kN
M-EPD-5	1340 kN	M-EPE-7	2670 kN	M-FPD-3	2000 kN
M-EPD-6		M-EPE-8	2670 kN	M-FPD-4	2670 kN
thru	1450 kN	M-EPE-9	3560 kN	M-FPD-5	3560 kN
M-EPD-9		M-EPE-10	3560 kN	M-FPD-6	4450 kN

NOTES:

1. Charpy V - notch tests are not required for steel used in bearing pedestals.

2. Fabricate bearing pedestals with 8 mm fillet welds unless otherwise incicated.

3. The diameter of the pin - holes and grooves shall be 50 mm with a tolerance of +0.25 mm and -0.00 mm. The pin diameter shall be 50 mm with a tolerance of +0.00 mm and -0.25 mm.

4. Pedestals M-EPE without center stiffeners have only one drainage hole. Pedestals M-FPD have no drainage holes.

5. Bearing pedestals for use with painted structural steel shall be painted to conform to Section 506 of the Standard Specifications.

6. Upset the threads on the bearing pins and anchor bolts after assembly.

MATERIALS:

With unpainted structural steel -
All steel (including anchor bolts) ..... ASTM A709/A709M, Grade 345W
Heavy hex cap screws ..... ASTM F568, Class 8.8.3
Heavy hex nuts for bearing pins ..... ASTM A563M, Class 8S3 or 10S3
and anchor bolts

With painted structural steel -
All steel (including anchor bolts) ..... ASTM A709/A709M, Grade 345 or
ASTM A709/A709M, Grade 345W
Heavy hex cap screws ..... ASTM F568, Class 8.8
Heavy hex nuts for bearing pins and anchor bolts ..... ASTM A563M, Class 5

Stainless Steel alternate for bearing pins ..... ASTM A582, Type 416, Condition T

ROCKER BEARING PEDESTALS

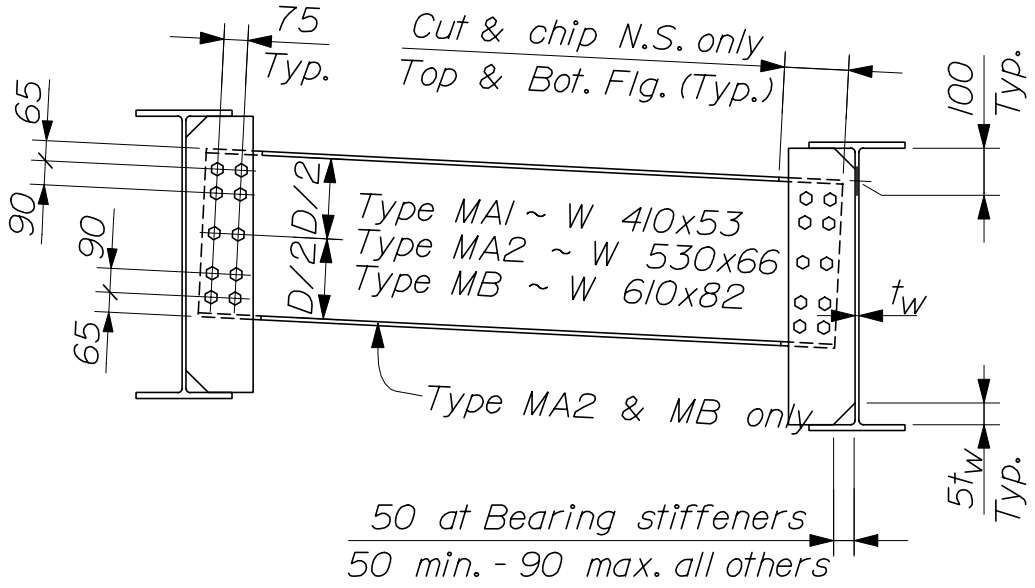

-- TYPE MA1, MA2, & MB --

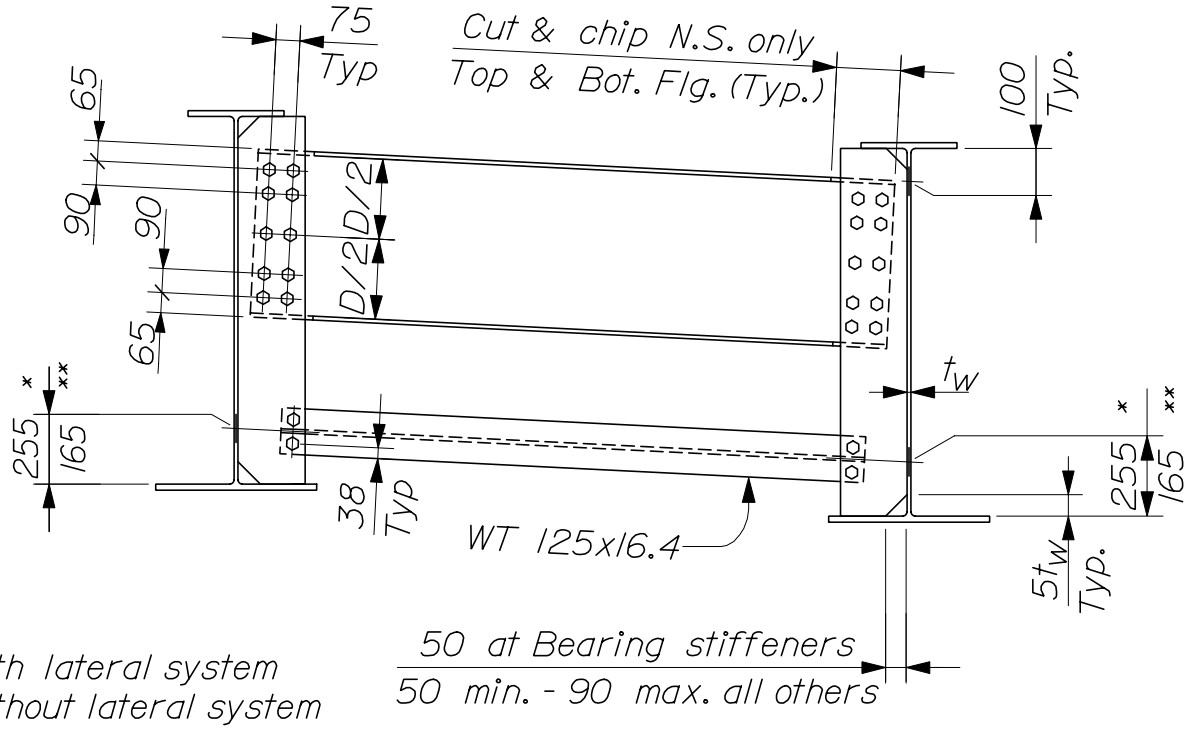

* with lateral system
** without lateral system

-- TYPE MC1 & MC2 --

DIAPHRAGMS

504(15)

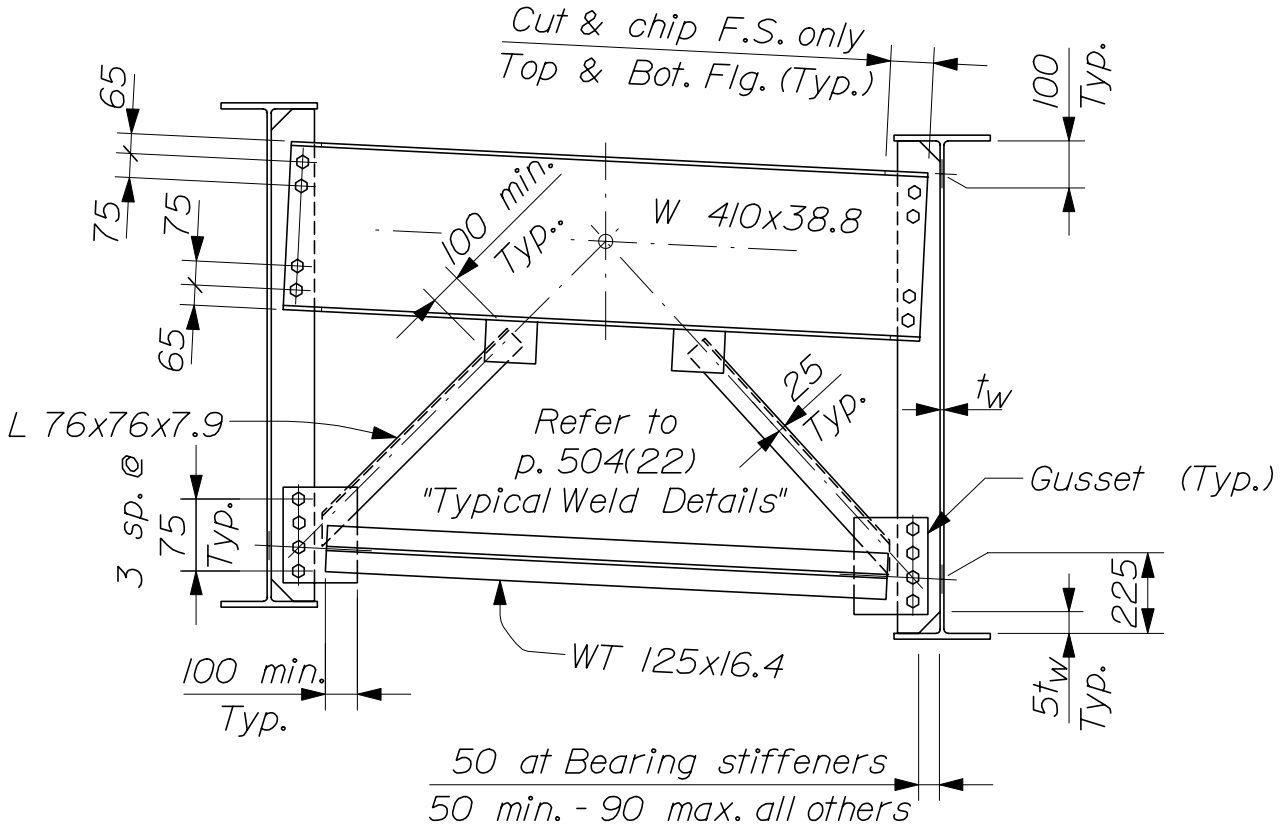

-- TYPE MD --

Dimension "A" shall be approximately equal to but not greater than dimension "B". Neither dimension shall be less than 90 mm.

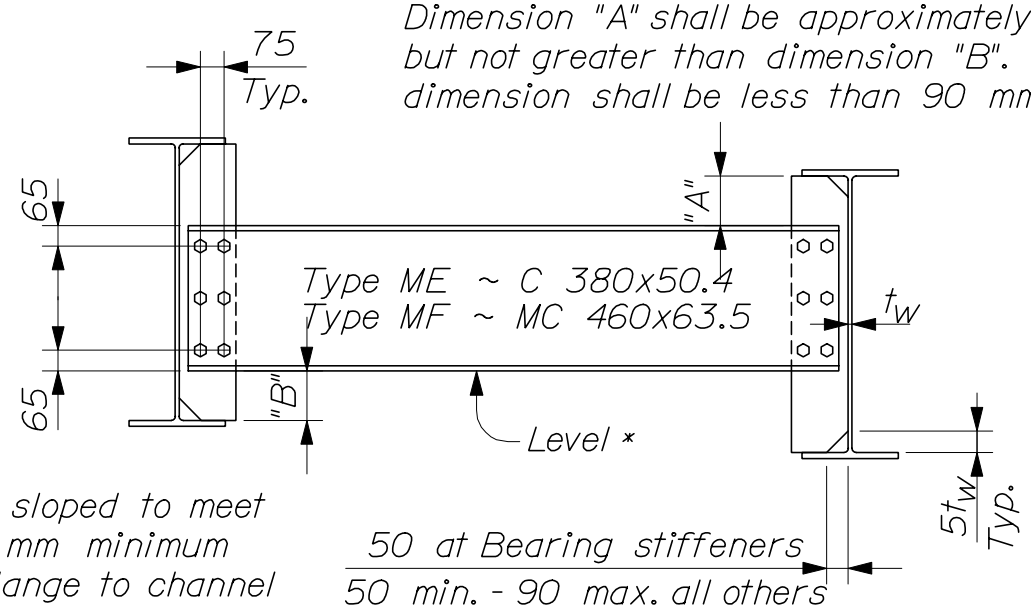

* May be sloped to meet the 90 mm minimum from flange to channel

-- TYPE ME & MF --

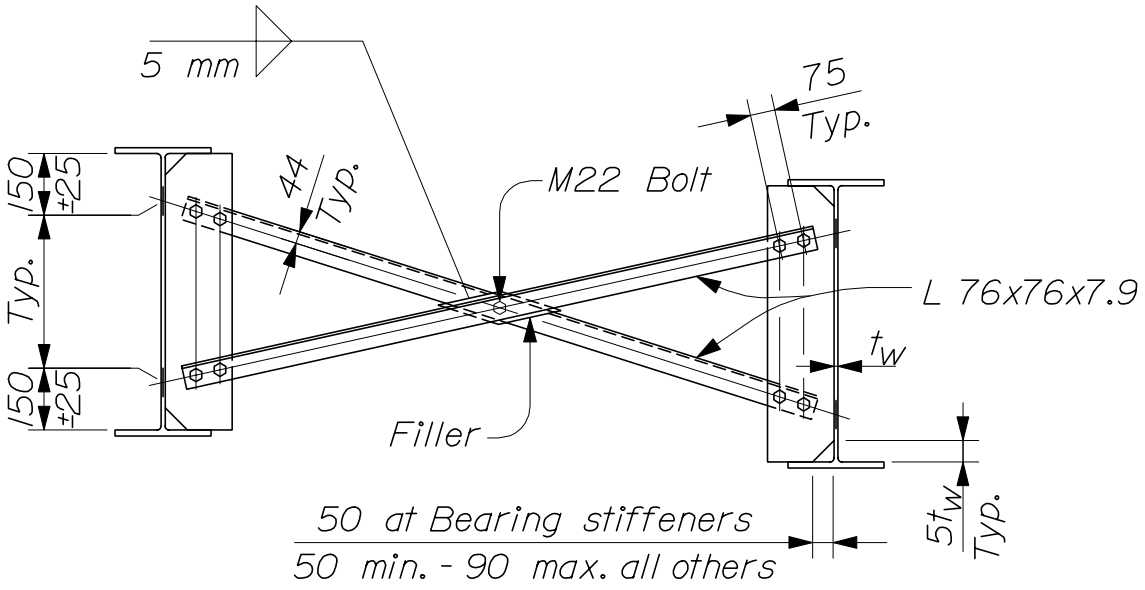

-- TYPE MG --

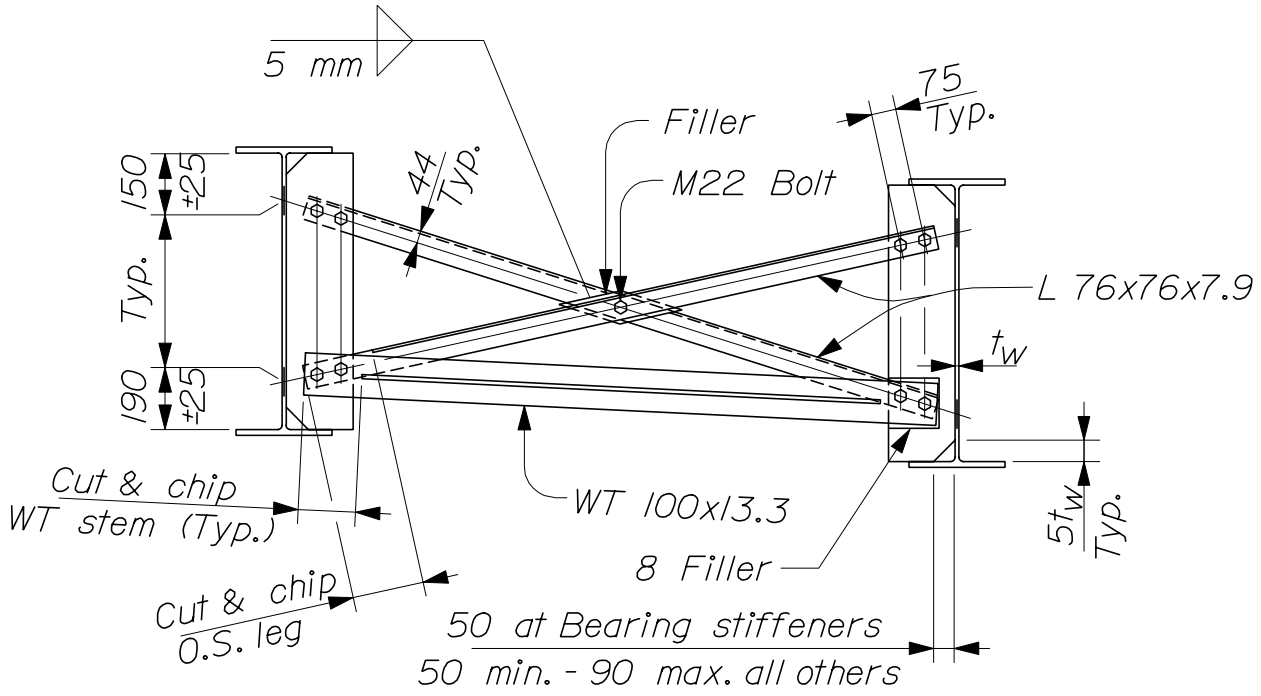

-- TYPE MH --

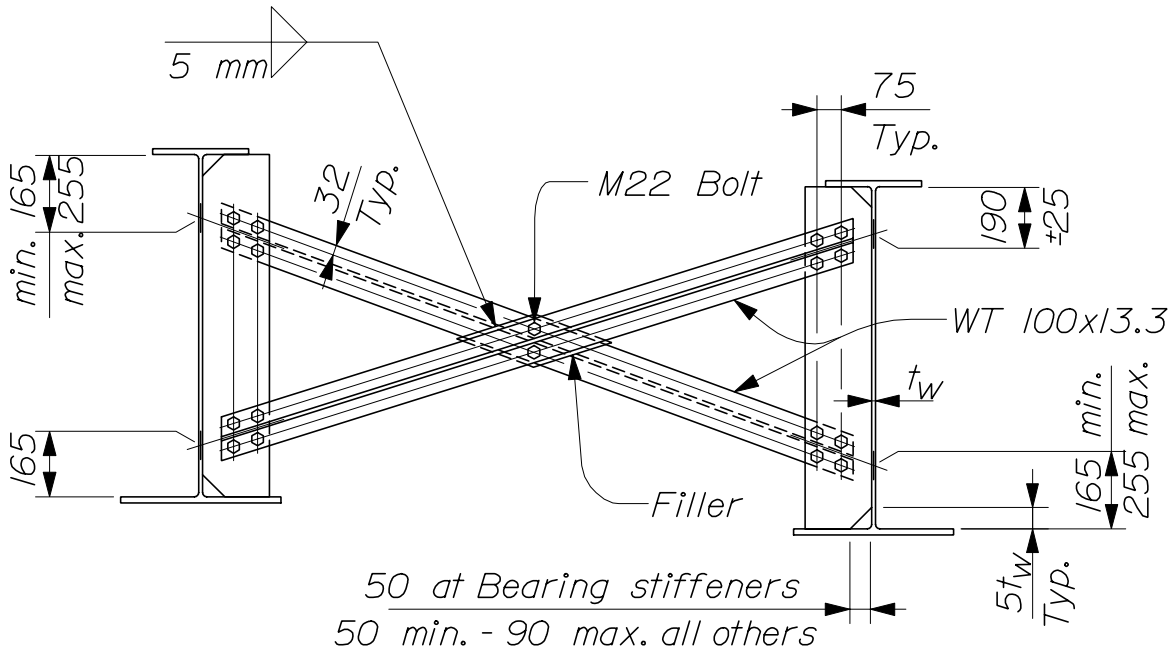

-- TYPE MJ --

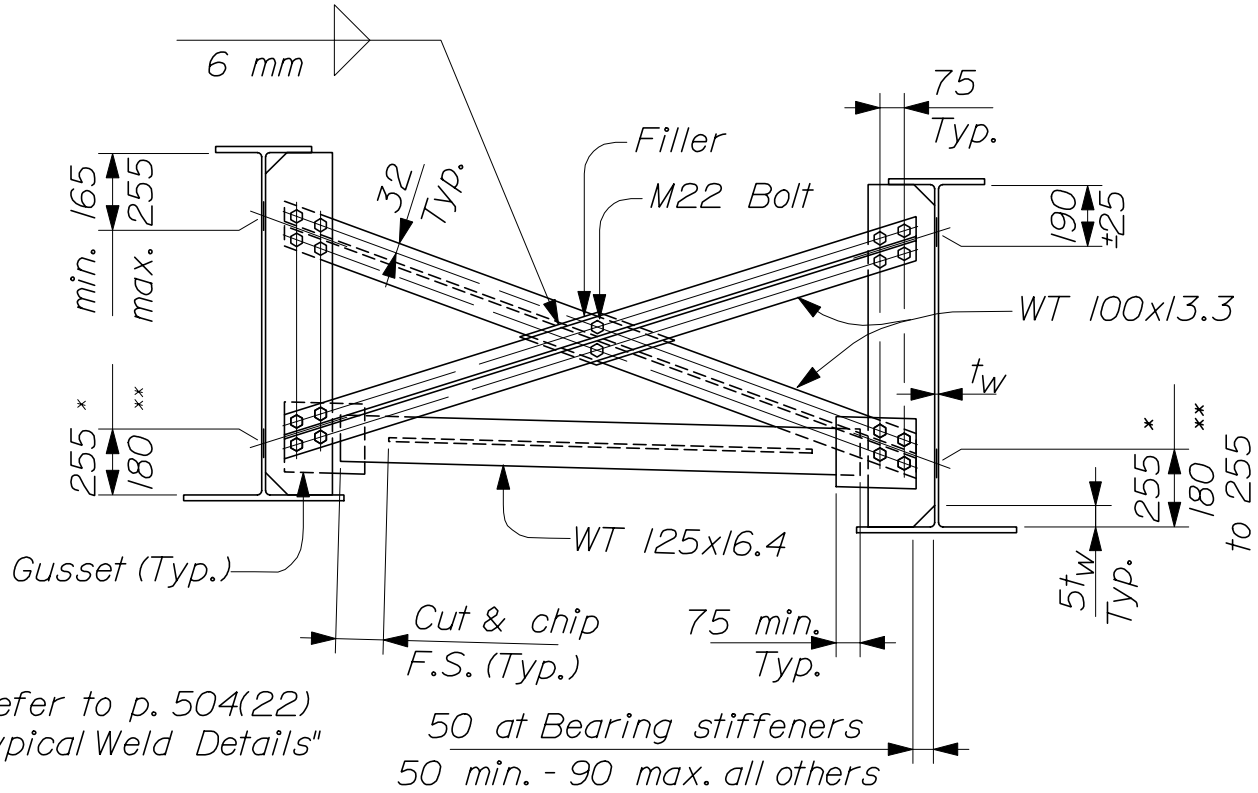

Refer to p. 504(22)
"Typical Weld Details"

* with lateral system
** without lateral system

-- TYPE MK --

CROSSFRAMES

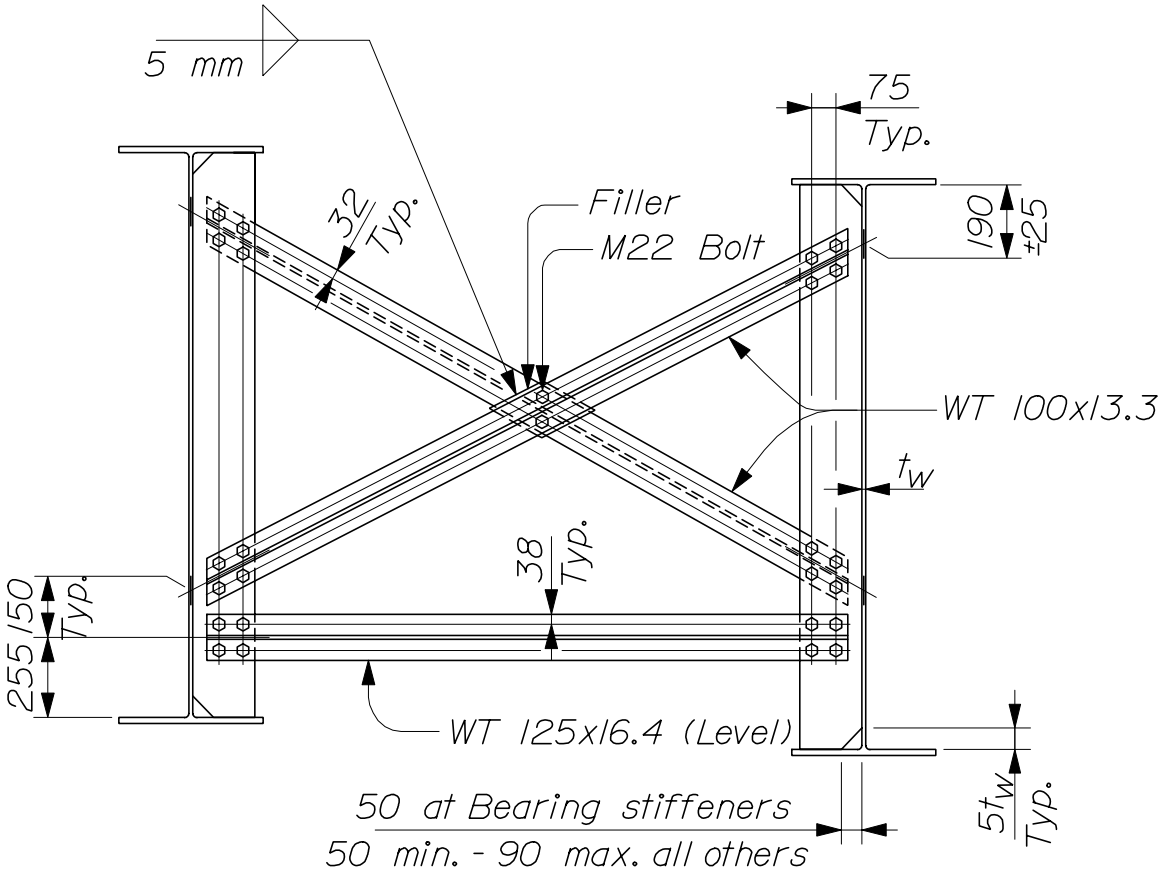
5 mm
75
Typ.
Filler
M22 Bolt
32
Typ.
190
±25
WT 100x13.3
t_w
38
Typ.
150
Typ.
255
WT 125x16.4 (Level)
50 at Bearing stiffeners
50 min. - 90 max. all others
$5t_w$
Typ.

-- TYPE ML --

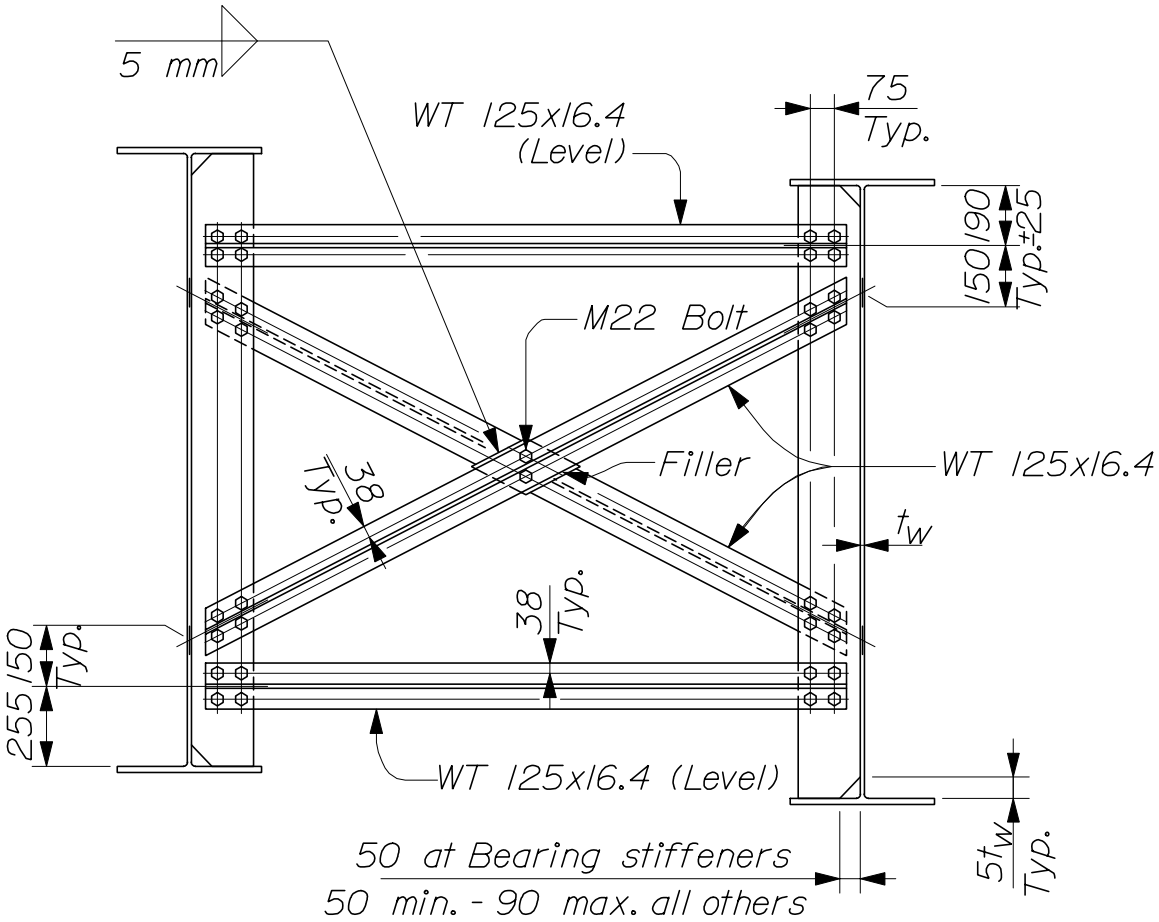
5 mm
WT 125x16.4
(Level)
75
Typ.
150 190
Typ. ±25
M22 Bolt
Filler
WT 125x16.4
38
Typ.
t_w
38
Typ.
255 150
Typ.
WT 125x16.4 (Level)
50 at Bearing stiffeners
50 min. - 90 max. all others
$5t_w$
Typ.

-- TYPE MM --

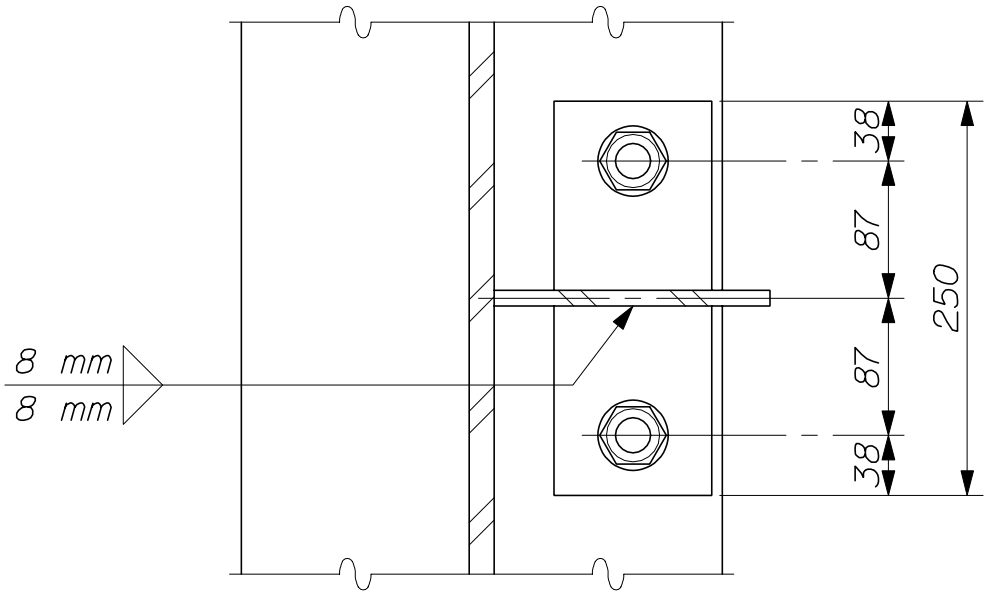

-- PLAN --

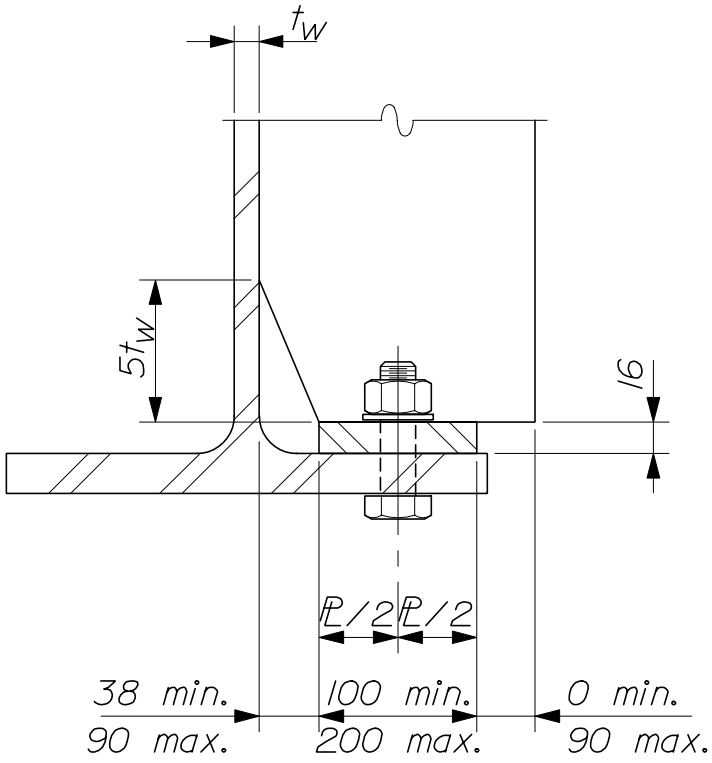

-- SECTION --

TENSION FLANGE CONNECTION FOR DIAPHRAGMS & CROSSFRAMES

504(21)

NOTES:

1. Steel for diaphragms, crossframes, connection plates, gussets and stiffeners shall be as designated on the Design Drawings.

2. Bolt holes shall be 24 mm ($^{15}/_{16}$ in.). The minimum edge distance shall be 38 mm ($1\,^{1}/_{2}$ in.) unless otherwise shown on the Design Drawings. Oversized holes may be used with the permission of the Resident.

3. Connection plates and gussets shall be 10 mm ($^{3}/_{8}$ in.) minimum thickness. Connection plates shall be 175 mm (7 in.) minimum width. The plate thickness for stiffeners and bent connection plates shall be as shown on the Design Drawings.

4. Connection plates shall be full web depth except that connection plates shall be connected to flanges in tension and stress reversal using the "Tension Flange Connection" detail.

5. Bearing stiffeners shall be mill - to - bear on the bottom flange and tight fit to the top flange. Bearing stiffeners used as connection plates shall be connected to flanges in tension and stress reversal using the "Tension Flange Connection" detail.

6. Intermediate stiffeners not intended to carry concentrated loads shall be tight fit to both flanges. Intermediate stiffeners used as connection plates shall be detailed as connection plates.

7. Stiffeners not used as connection plates shall be welded to the web only. Connection plates and stiffeners used as connection plates shall be welded to the web and flanges (or "Tension Flange Connection" detail) on both sides of the plates. The welds shall terminate 15 mm ± 3 mm ($^{5}/_{8}$ in. ± $^{1}/_{8}$ in.) from the ends of the plates.

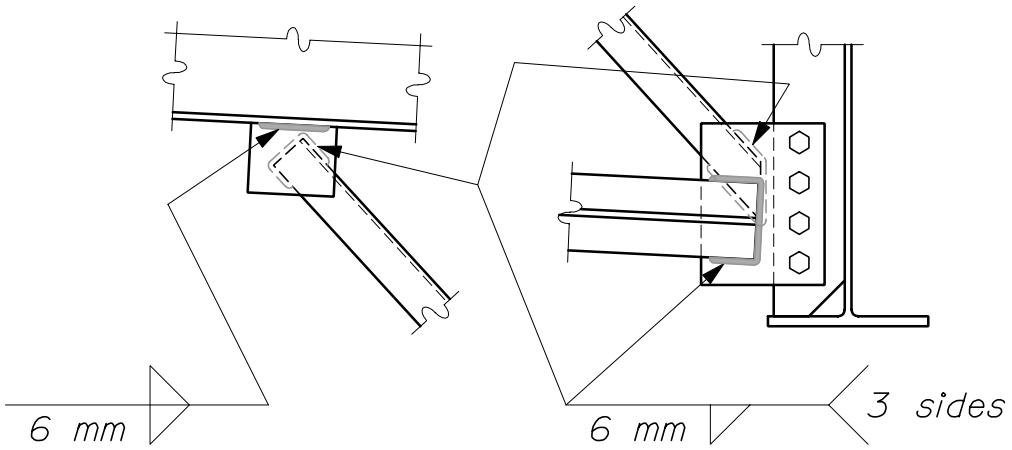

-- TYPICAL WELD DETAILS --

DIAPHRAGM & CROSSFRAME NOTES

504(22)

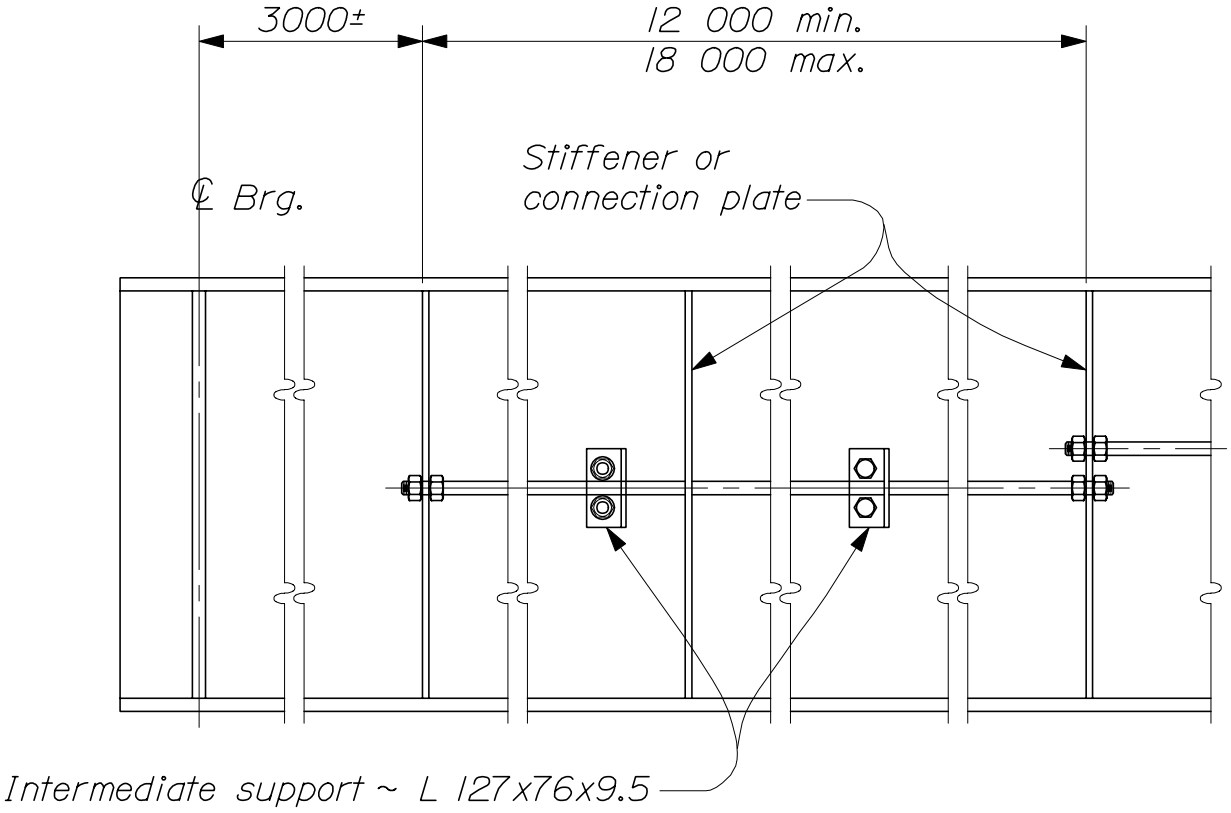

-- ELEVATION --

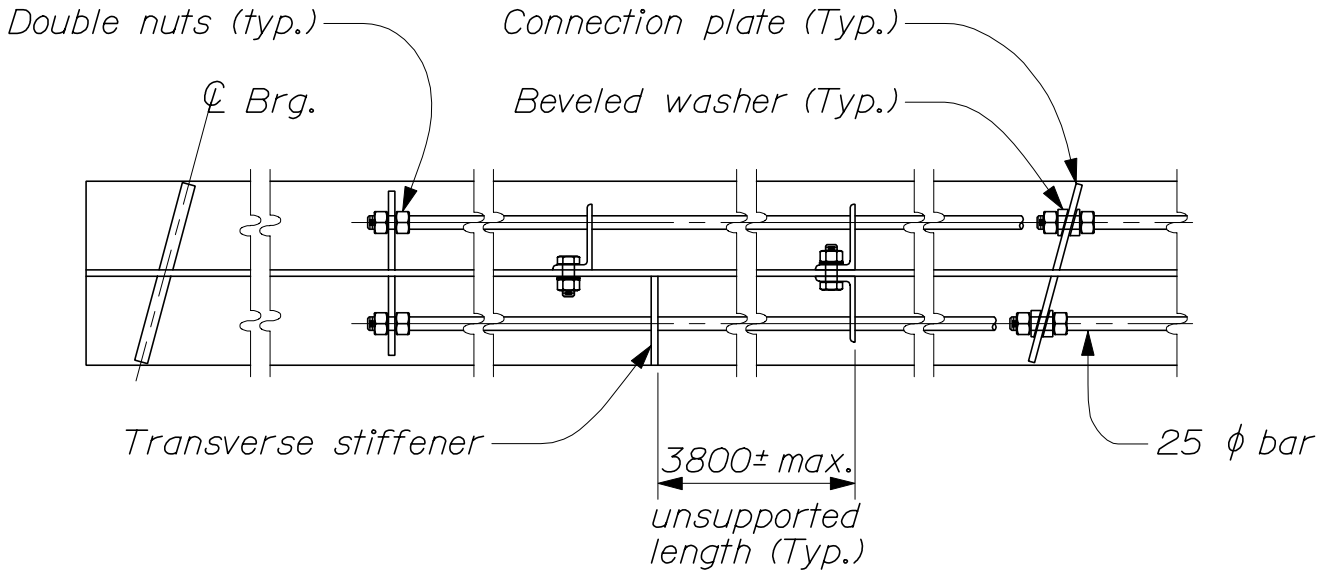

-- PLAN --

HAND - HOLD DETAILS

504(23)

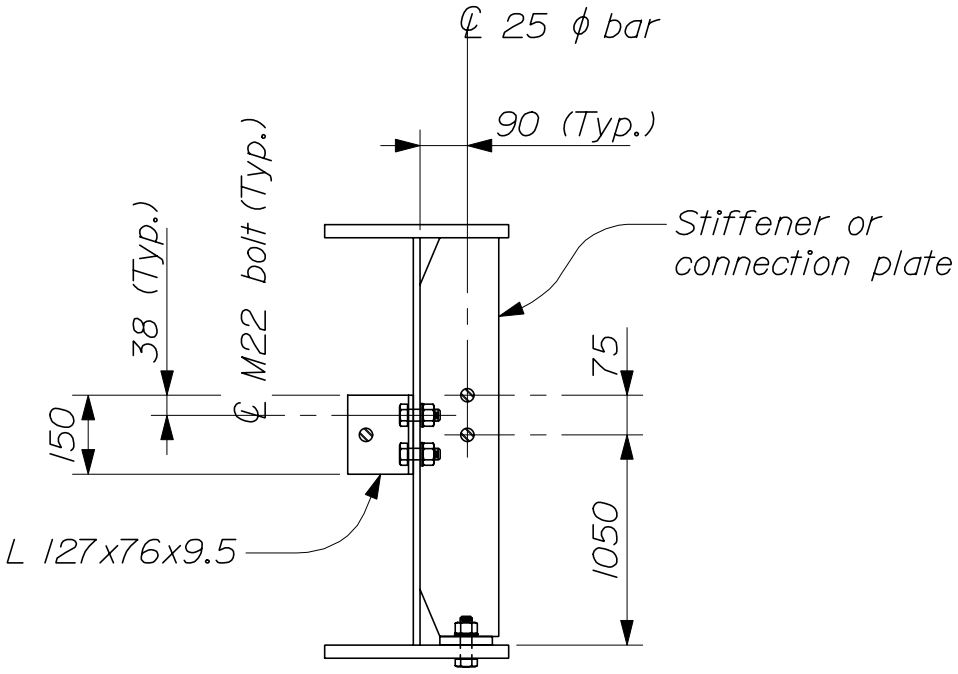

-- TYPICAL SECTION --

NOTES:

1. Hand - hold bars shall be installed on the inside of exterior beams and on both sides of interior beams when called for on the Design Drawings.

2. Termination and splicing of hand - hold bars shall occur at stiffeners or connection plates. Angle supports shall be used at intermediate locations only. All termination and splice plates shall be a minimum of 12 mm thick. Additional stiffeners shall be provided where necessary to meet the described requirements.

3. Hole sizes for bolts and hand - hold bars shall be 2 mm larger than the bolt / bar size. Edge distances for holes shall be 38 mm unless other wise shown.

4. For unpainted applications, the hand - hold bar and nuts shall be galvanized to con- form to ASTM A123.

MATERIALS:

With unpainted structural steel - All steel----------ASTM A709/A709M, Grade 345W
Heavy hex nuts for 25 ϕ bar----------ASTM A563M, Class 8S3 or 10S3

With painted structural steel - All steel----------ASTM A709/A709M, Grade 250
Heavy hex nuts for 25 ϕ bar----------ASTM A 563M, Class 5

HAND - HOLD DETAILS

504(24)

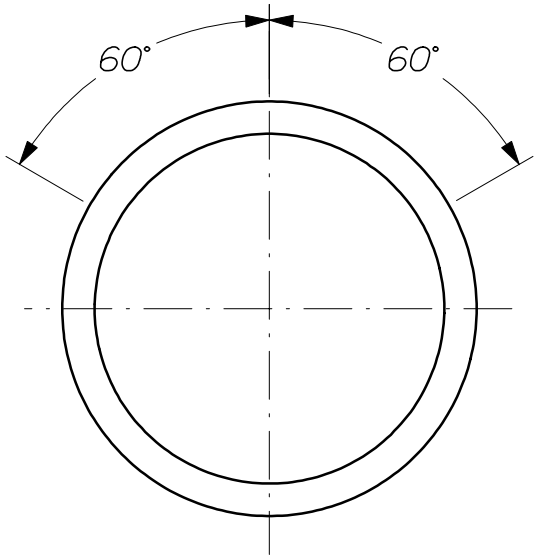

~ PLACEMENT OF ANCHORS ~

Anchors shall be installed 400 mm from centerline of joint.

Holes for anchors shall be drilled larger than the anchor bolt diameter specified in the table below to allow for anchoring materials.

PIPE SIZE (I.D.)	THREAD ϕ
300 - 685	16 mm (5/8")
760 - 1 675	19 mm (3/4")
1 828 - 3 352	24 mm (1")

GENERAL NOTES

1. For new concrete pipe or pipe designated to be removed and reset, ties shall be used at all pipe inlets and outlets as specified in the construction notes.

2. Ties shall be used only to hold pipe sections laterally together, not for pulling the pipe section together.

3. Tie rods and connections shall be placed on the outside of all pipe sections unless otherwise directed.

4. Tie rod shall be galvanized steel, including all hardware required. Any welded areas shall be treated with an approved galvanized paint. All welding shall meet current MDOT Specifications. Steel shall conform to ASTM - 8307 or equivalent.

CONCRETE PIPE TIES

504(25)

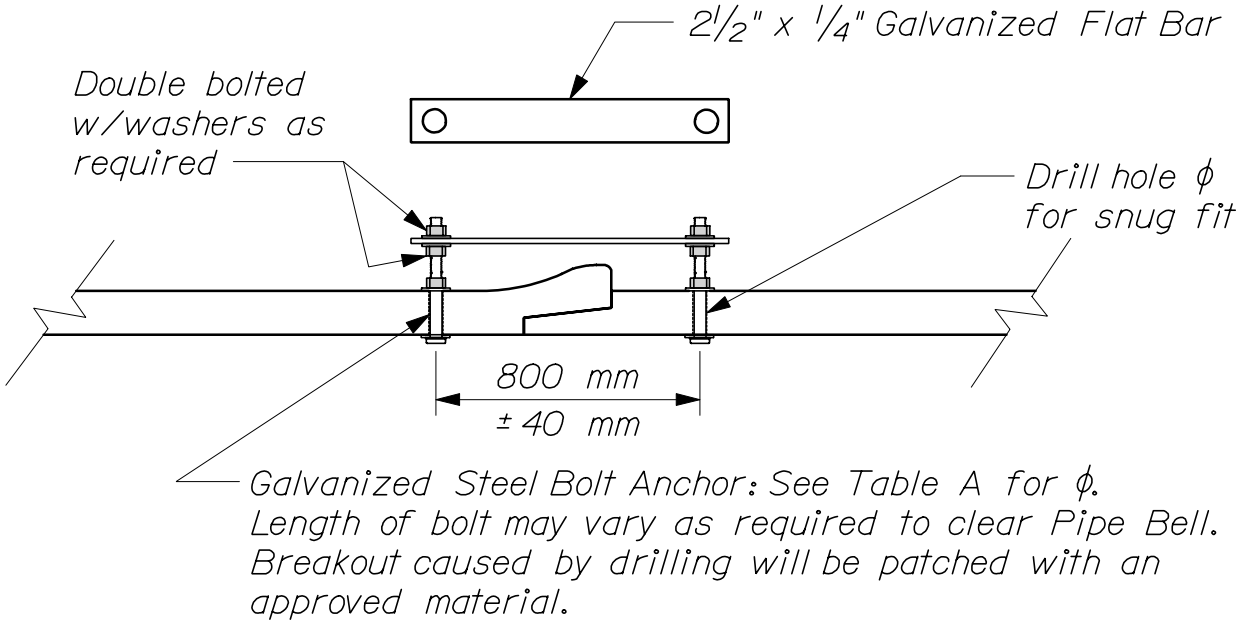

GALVANIZED BOLTED ANCHOR
~ W/GALVANIZED FLATBAR CONNECTION ~

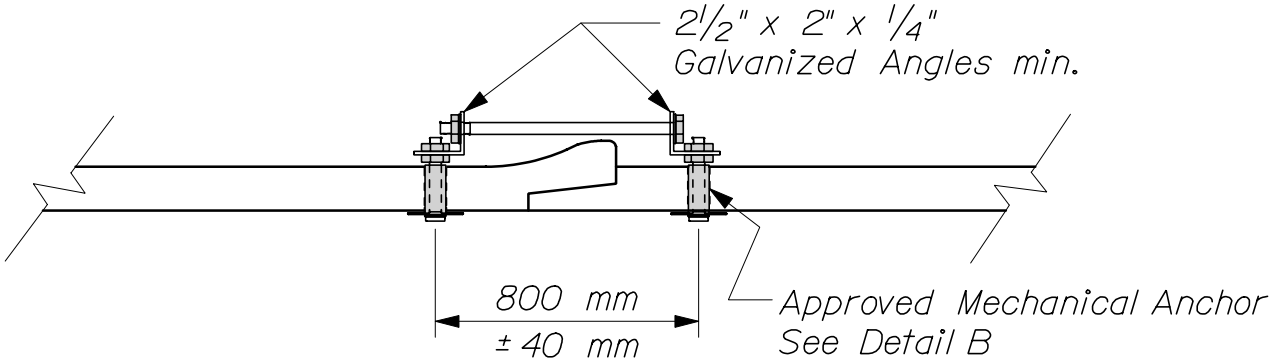

~ MECHANICAL ANCHOR W/ GALVANIZED PLATE ~
CORE DRILL HOLES

TABLE A	
THREAD ϕ	PIPE I.D.
16 mm	19 mm
19 mm	25 mm
25 mm	32 mm

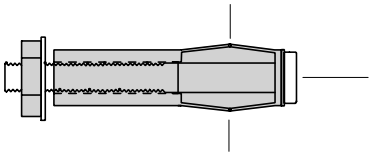

Compression/Expansion Type
Mechanical Anchor

~ DETAIL B ~

CONCRETE PIPE TIES

504(26)

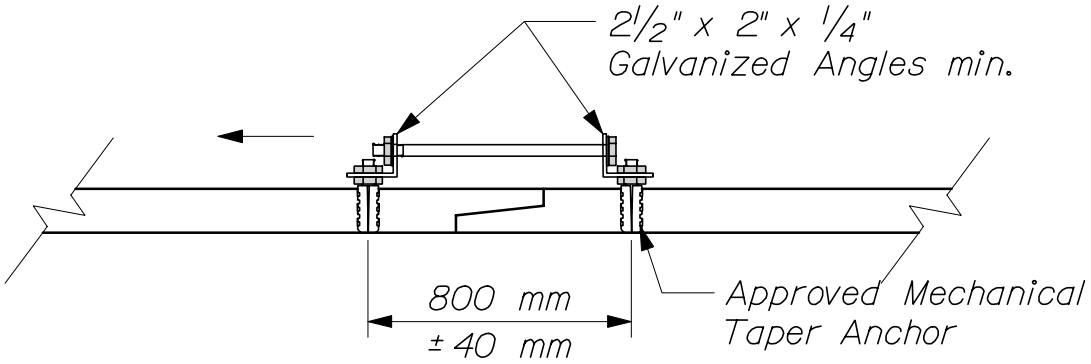

~ MECHANICAL ANCHOR W/GALVANIZED ANGLE PLATE ~

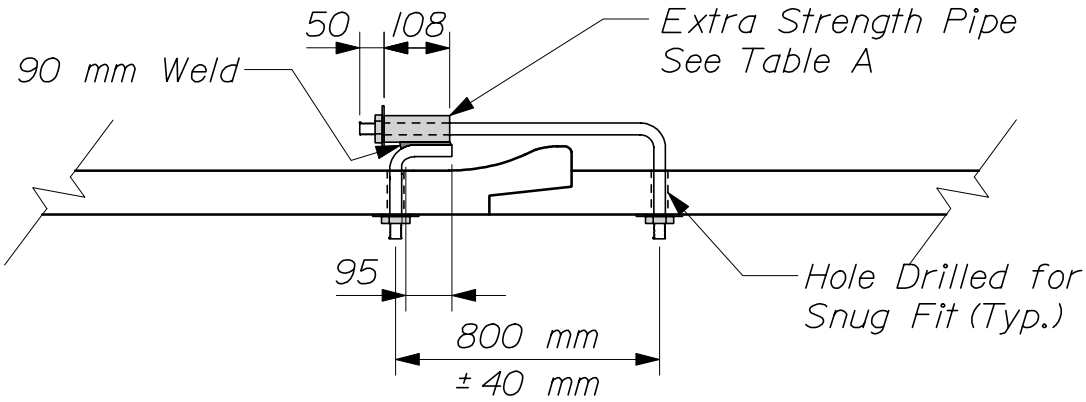

~ WELDED PIPE TIE ~

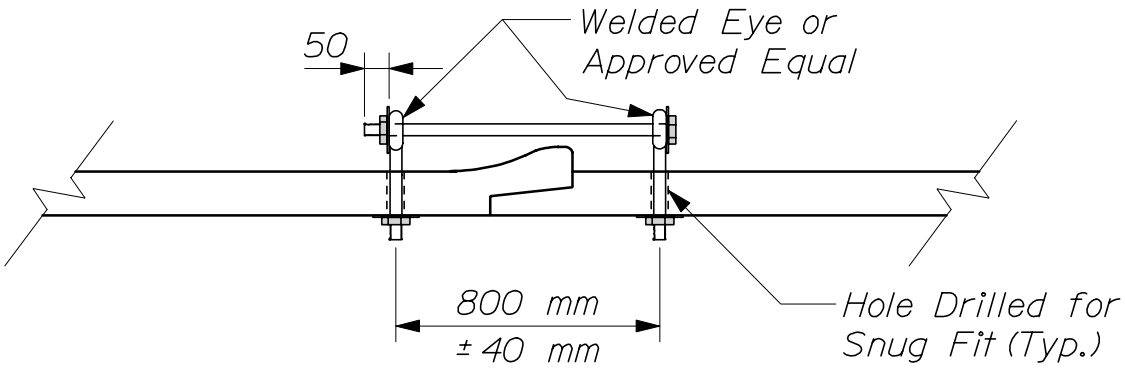

~ EYE BOLT TIE ~

TABLE A	
THREAD ϕ	PIPE I.D.
16 mm	19 mm
19 mm	25 mm
25 mm	32 mm

CONCRETE PIPE TIES

504(27)

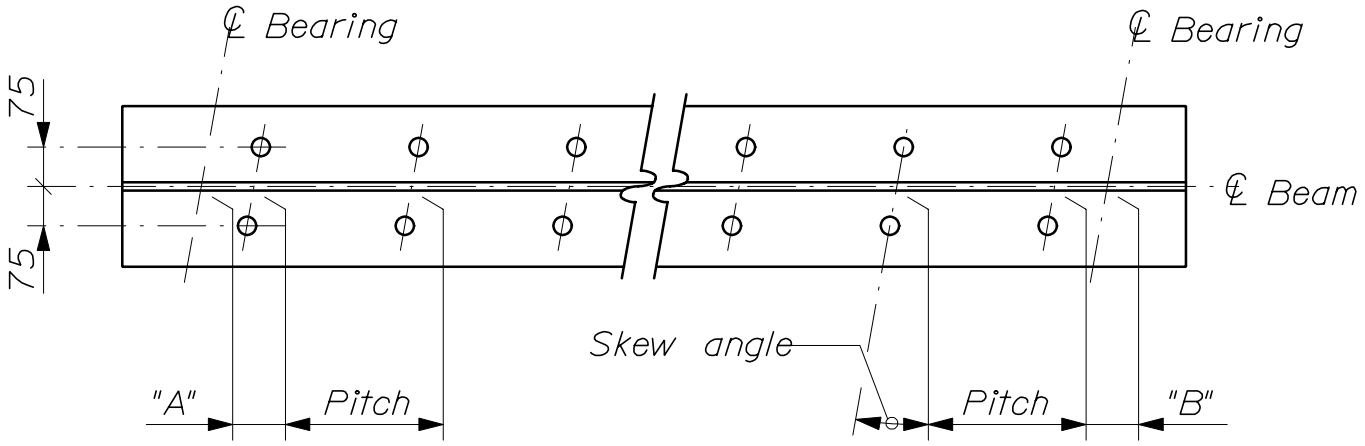

-- DOUBLE STUD LAYOUT --

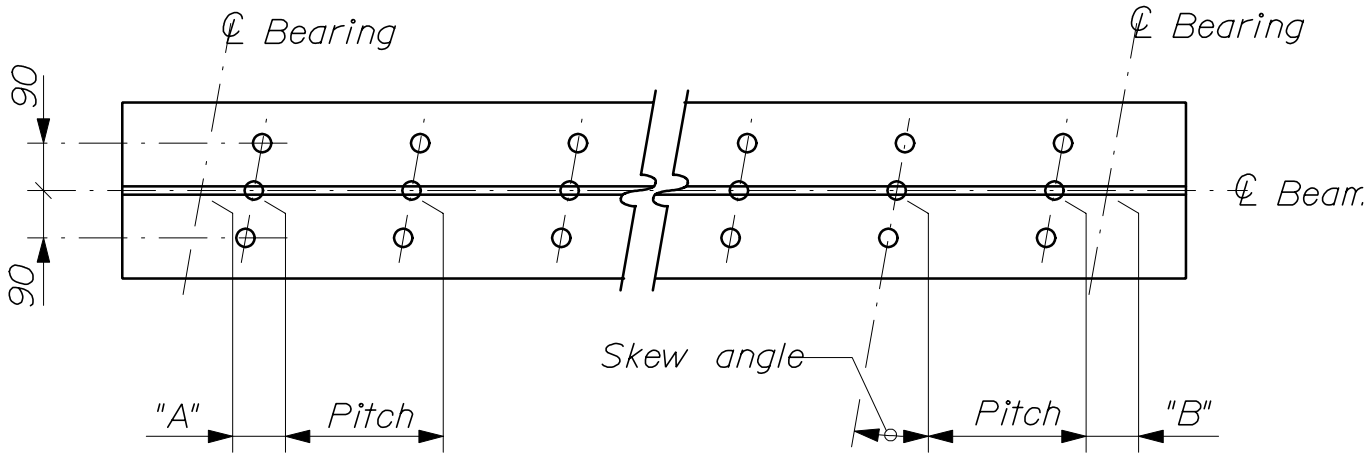

-- TRIPLE STUD LAYOUT -- 1:15

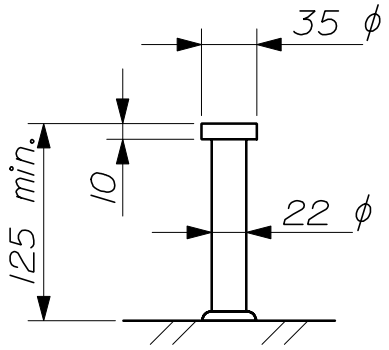

1:5

-- STUD DETAIL --

NOTES;

1. Refer to Design Drawings for dimensions "A" and "B", stud pitch and skew angle.

2. Studs shall project a minimum of 50 mm above the bottom of the slab.

SHEAR CONNECTORS

505(01)

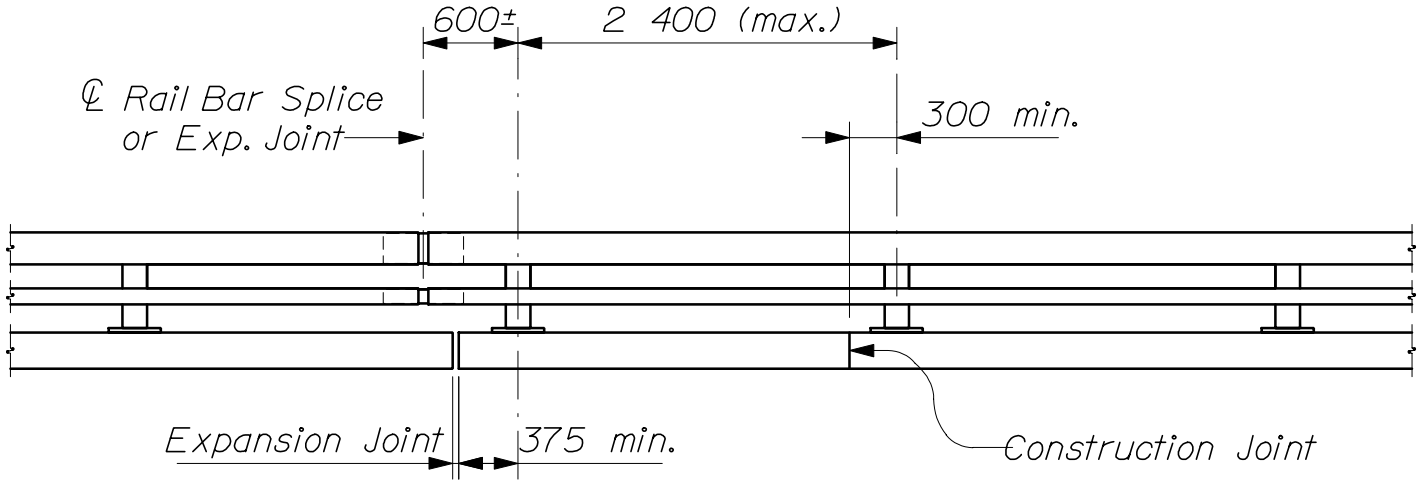

-- 2 - BAR TRAFFIC RAILING --

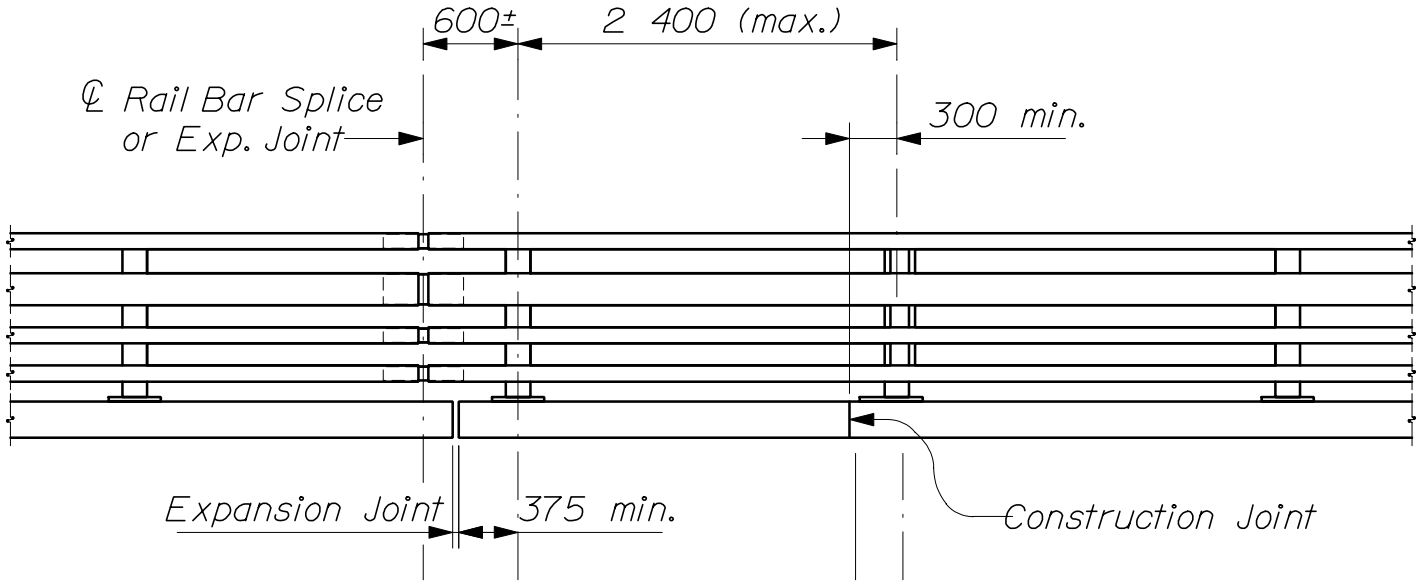

-- 4 - BAR TRAFFIC / PEDESTRIAN RAILING --

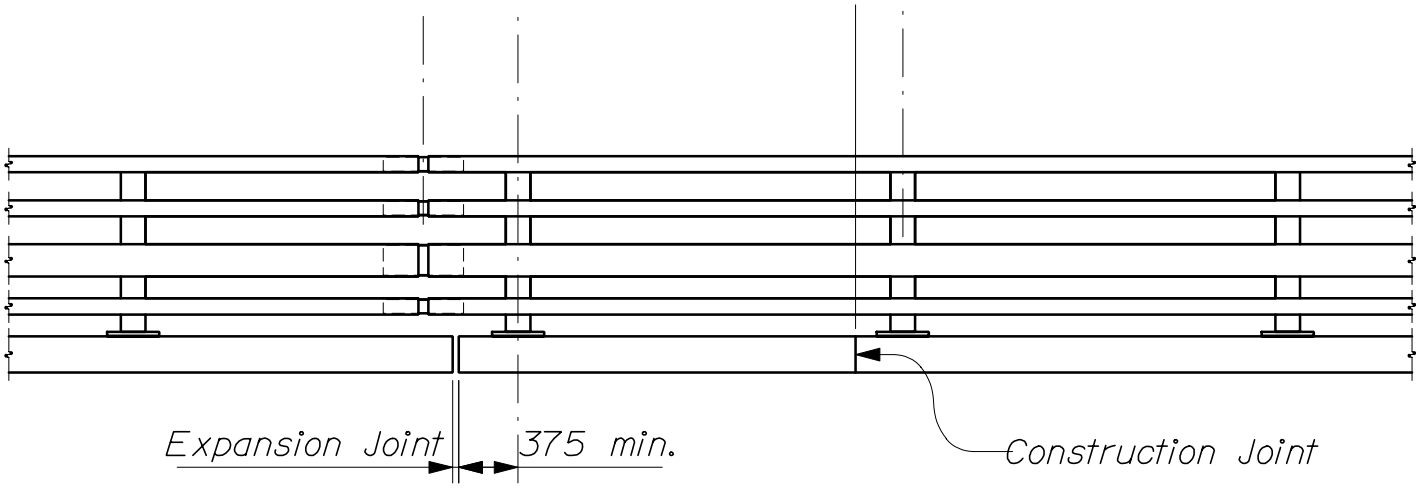

-- 4 - BAR TRAFFIC / BICYCLE RAILING --

STEEL BRIDGE RAILING

507(01)

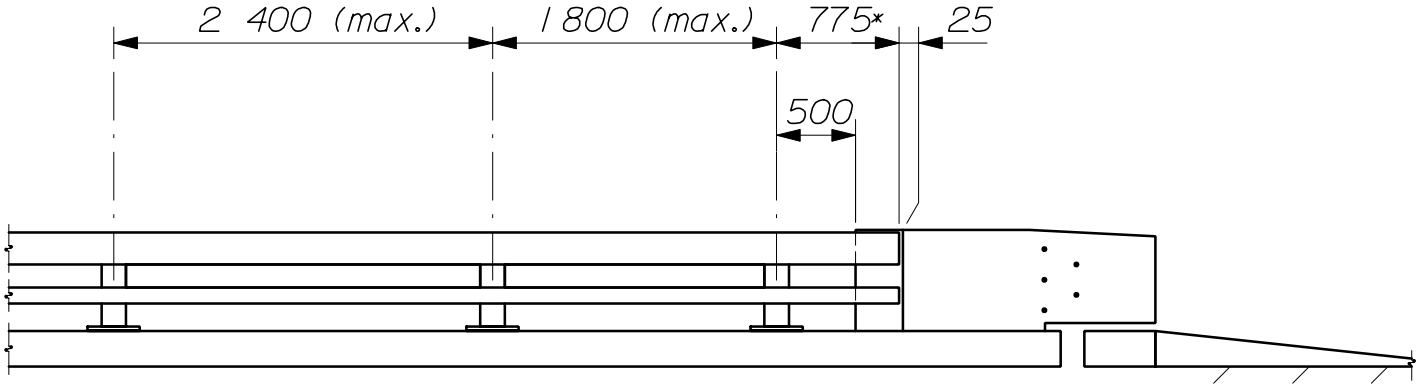

-- 2 - BAR TRAFFIC RAILING --

* Including rail bar cap

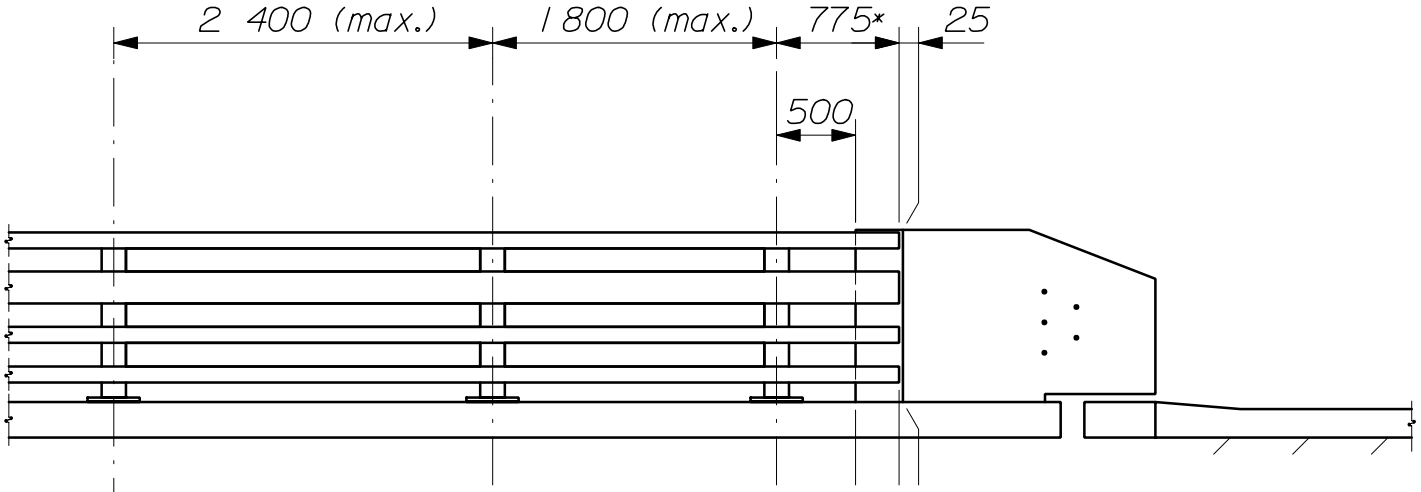

-- 4 - BAR TRAFFIC / PEDESTRIAN RAILING --

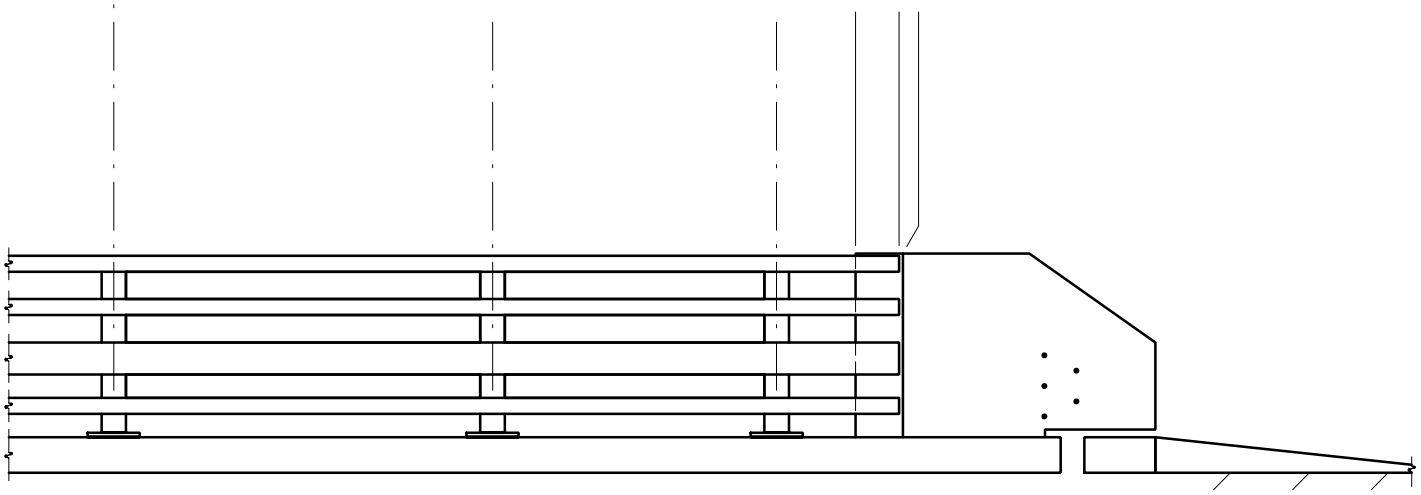

-- 4 - BAR TRAFFIC / BICYCLE RAILING --

STEEL BRIDGE RAILING

507(02)

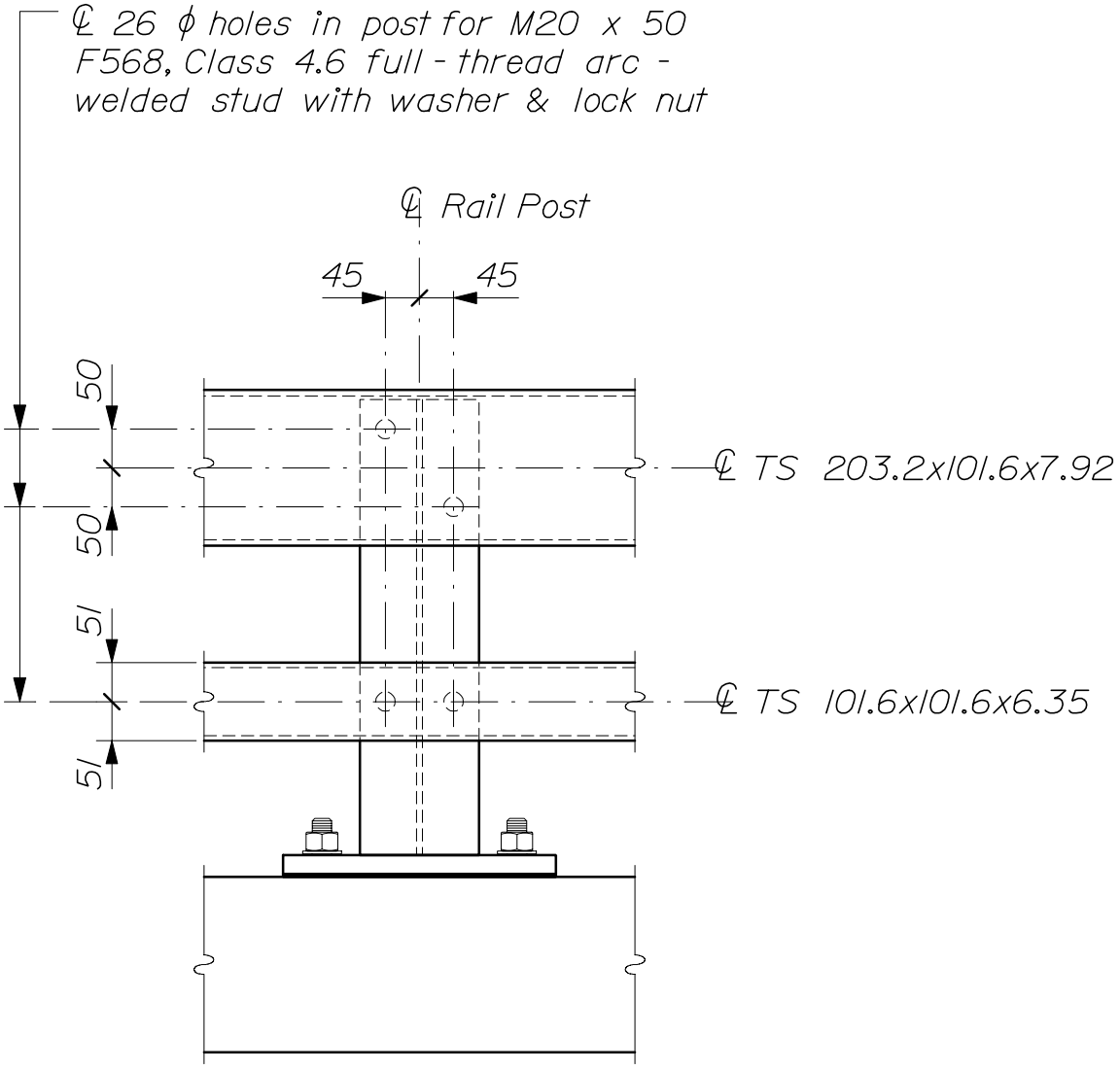

-- TYPICAL ELEVATION --
2 - Bar Traffic Railing is shown
Other railing configurations are similar

STEEL BRIDGE RAILING

507(03)

Rail Bars ~
TS 203.2x101.6x7.92 (1)
TS 101.6x101.6x6.35 (1)

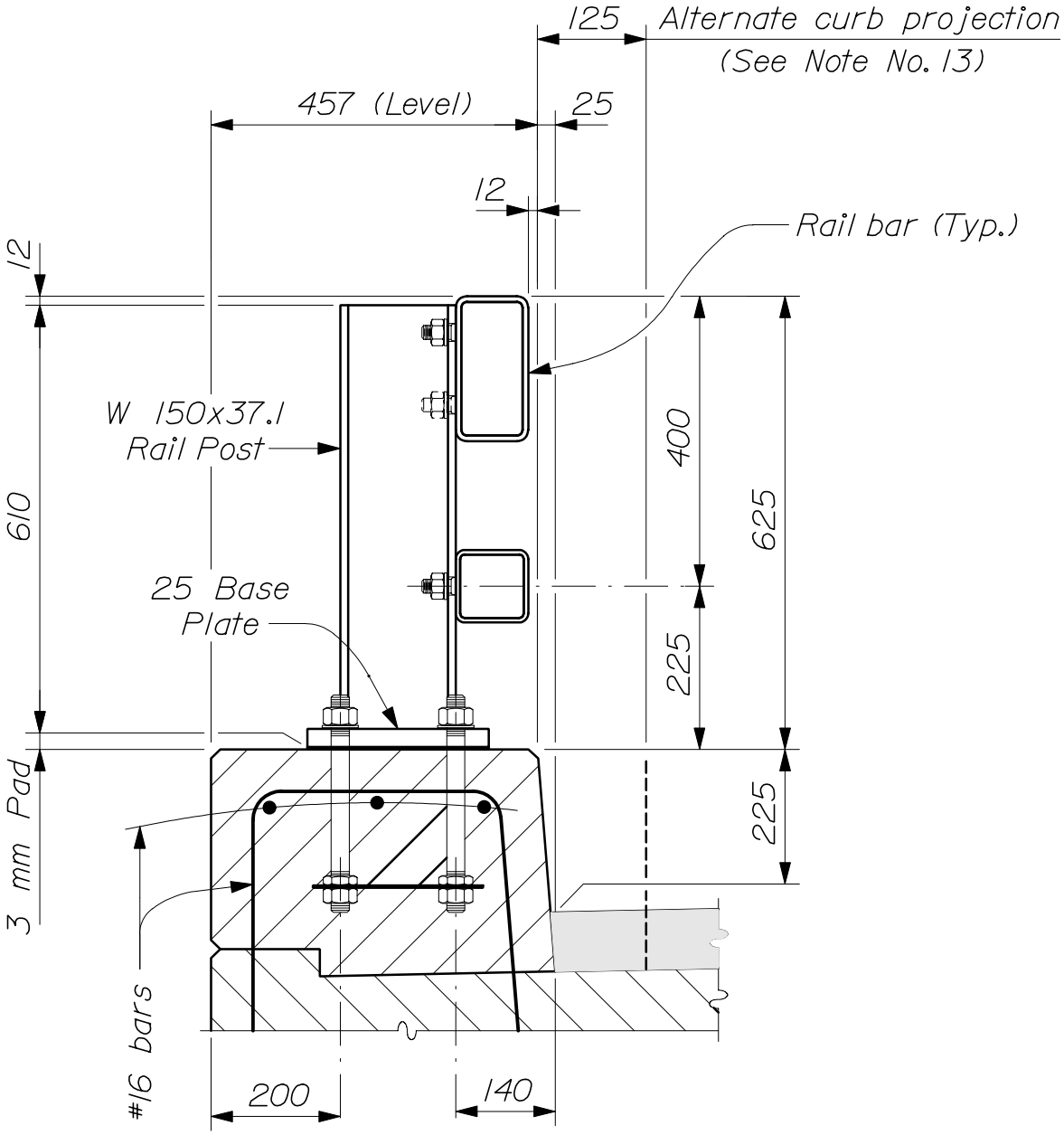

-- TYPICAL SECTION --
(2 - Bar Traffic Railing)

# STEEL BRIDGE RAILING
507(04)

Rail Bars ~
TS 203.2x101.6x7.92 (1)
TS 101.6x101.6x6.35 (3)

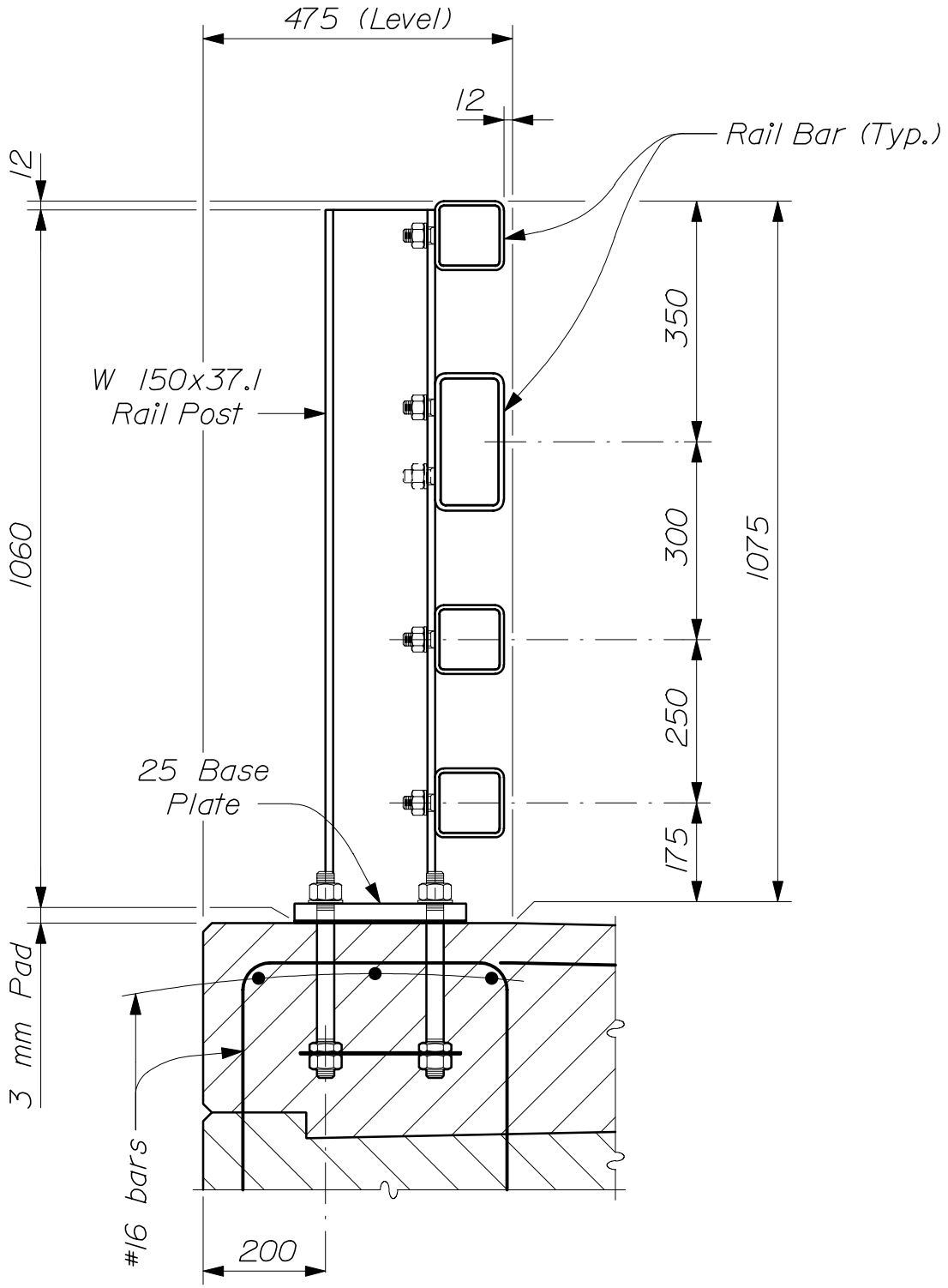

-- TYPICAL SECTION --
(4 - Bar Traffic / Pedestrian Railing)

# STEEL BRIDGE RAILING
507(05)

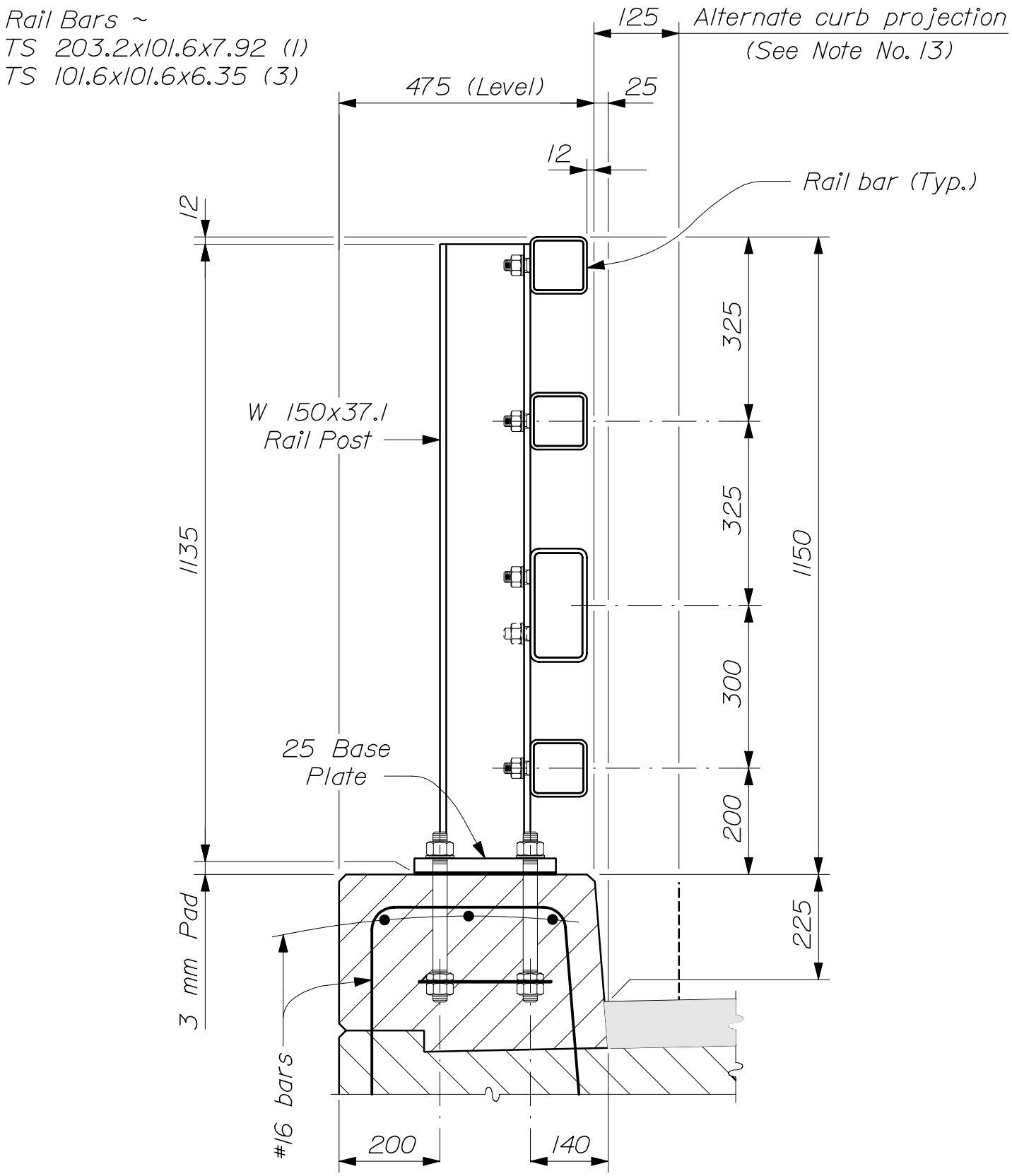

-- TYPICAL SECTION --
(4 - Bar Traffic / Bicycle Railing)

STEEL BRIDGE RAILING

507(06)

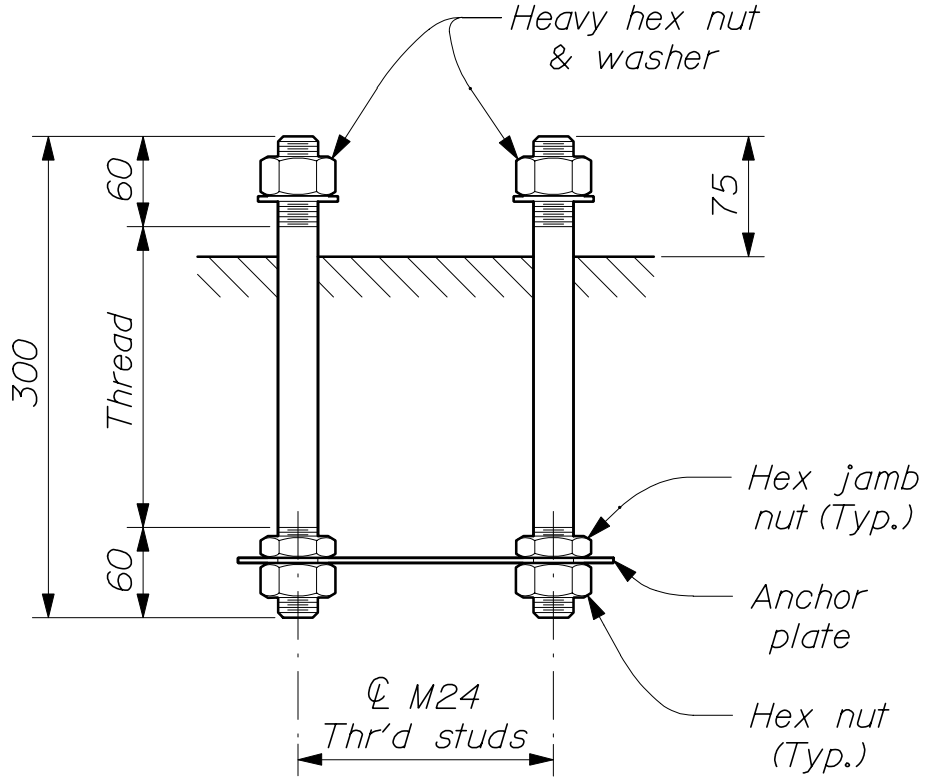

-- RAIL POST ANCHORAGE --

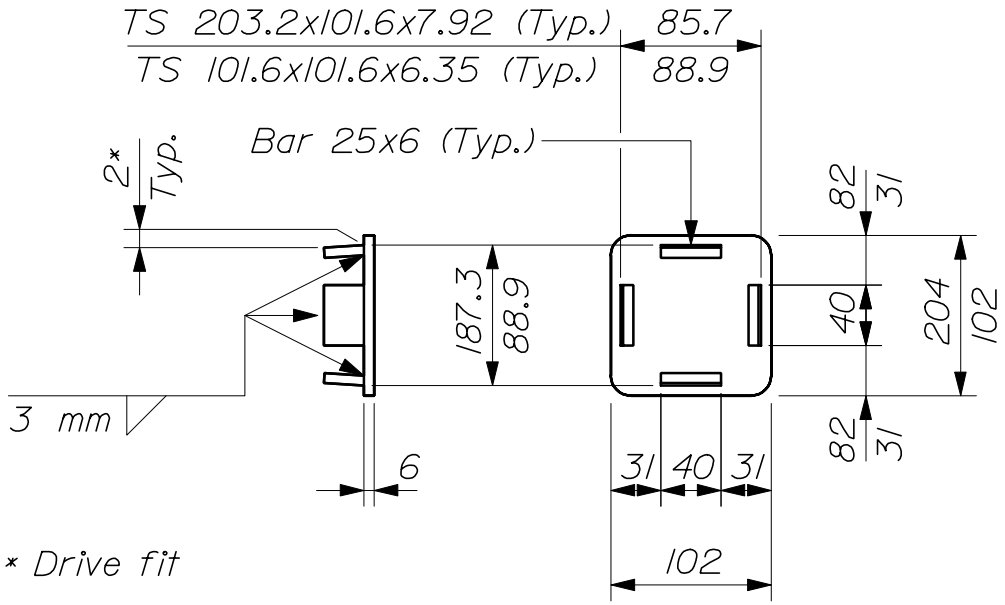

-- RAIL BAR CAP --

Note: Corner radius shall match rail bar

STEEL BRIDGE RAILING

507(07)

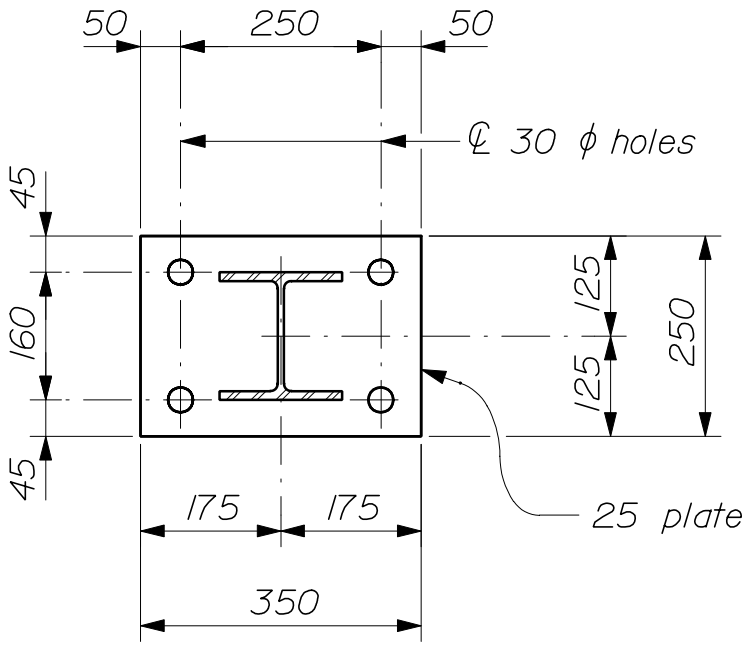

-- POST & BASE PLATE PLAN --

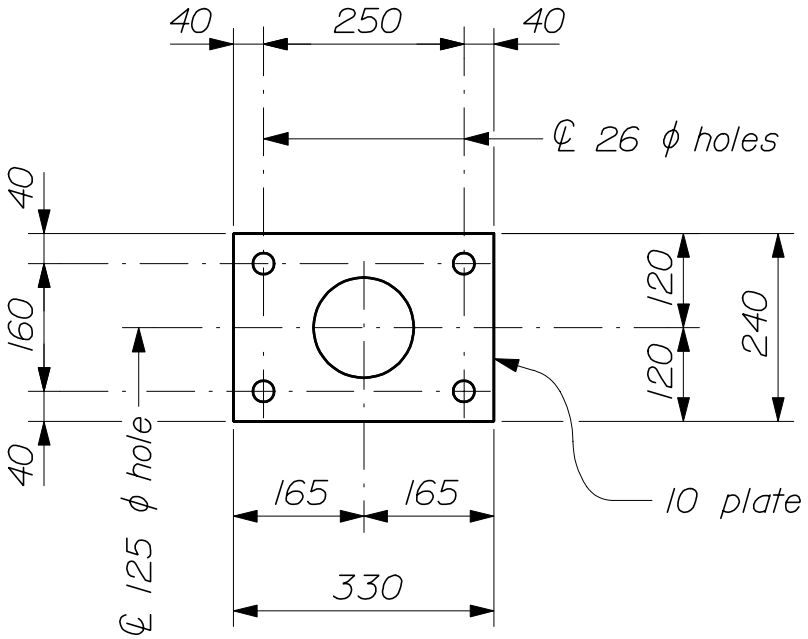

-- ANCHOR PLATE PLAN --

STEEL BRIDGE RAILING

507(08)

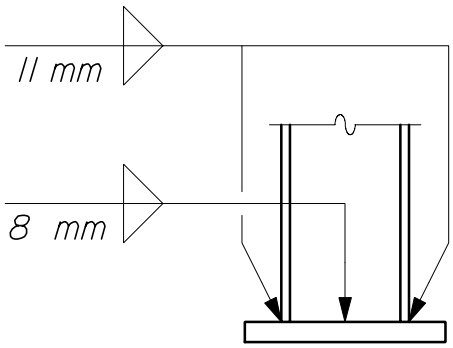

-- BASE WELD DETAIL --

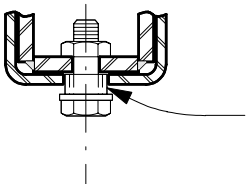

-- EXPANSION JOINT SECTION --
For details not shown, see
"Rail Bar Splice Section"

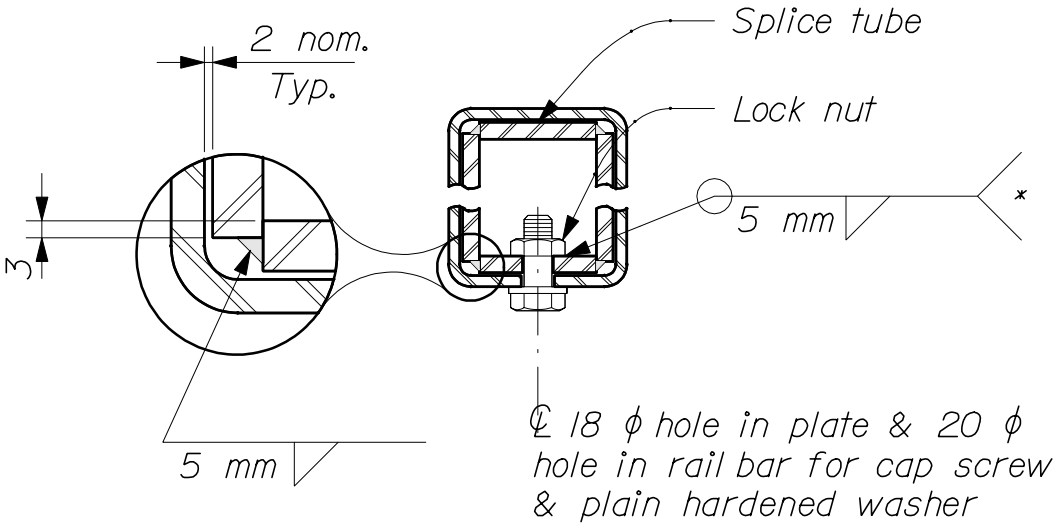

-- RAIL BAR SPLICE SECTION --
* Weld nuts to plate before assembling splice tube

# STEEL BRIDGE RAILING
507(09)

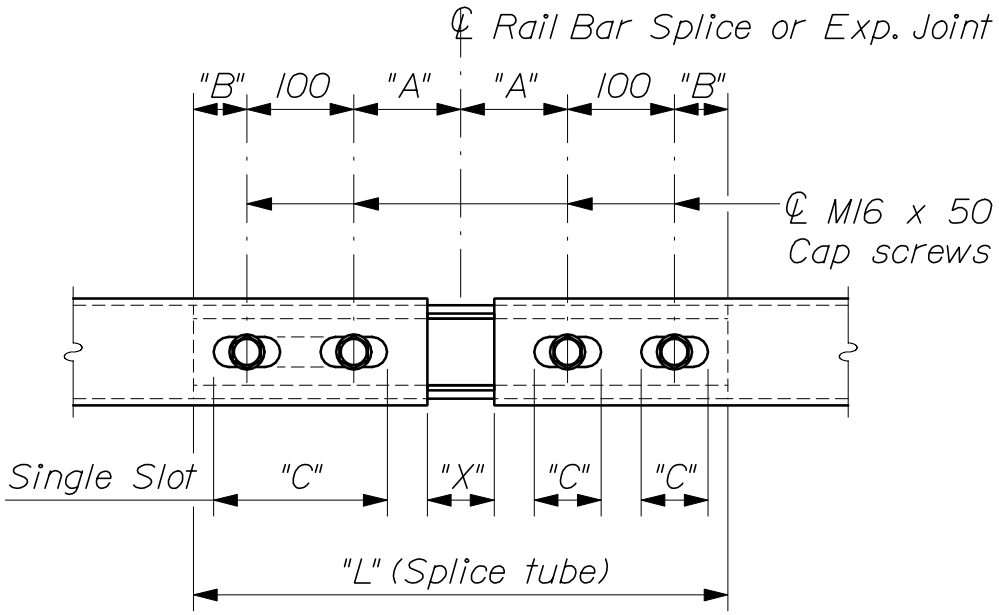

-- RAIL BAR SPLICE & EXPANSION JOINT DETAIL --
(Bottom View)

SPLICE TUBE DIMENSIONS		
	TS 203.2x101.6	TS 101.6x101.6
Top & Bot. Plates	62x10 x "L"	65x10 x "L"
Side Plates	170x10 X "L"	71x10 x "L"

SPLICE & EXPANSION JOINT TABLE					
"T"	"A"	"B"	"C"	"L"	"X"
Splice	100	50	--	500	20
≤100	100	50	65	500	65
>100≤165	140	60	90	600	100
>165≤225	165	85	225 *	700	125
>225≤330	215	110	275 *	850	175

T = Total Movement * = Single Slot

MATERIALS:

Rail bars----------ASTM A 500, Grade B
Rail posts----------AASHTO M 223M/M 223, Grade 345/50
(ASTM A 572/A 572M, Grade 50/345)
All other shapes & plates---------AASHTO M 183M/M 183 (ASTM A 36/A 36M)
Anchor studs, washers & nuts----------ASTM F 568, Class 8.8
All other bolts & nuts (unless noted)----------ASTM F 568, Class 4.6

STEEL BRIDGE RAILING

507(10)

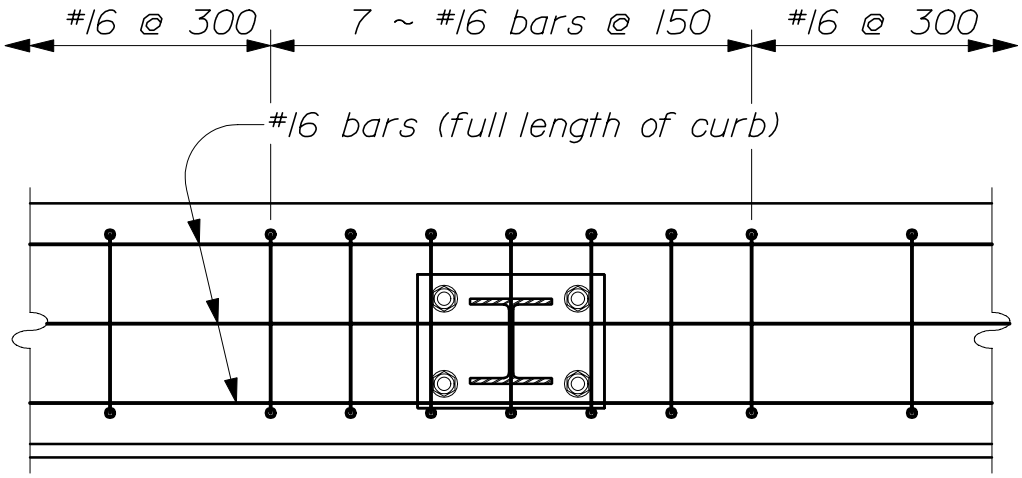

-- CURB REINFORCING PLAN --

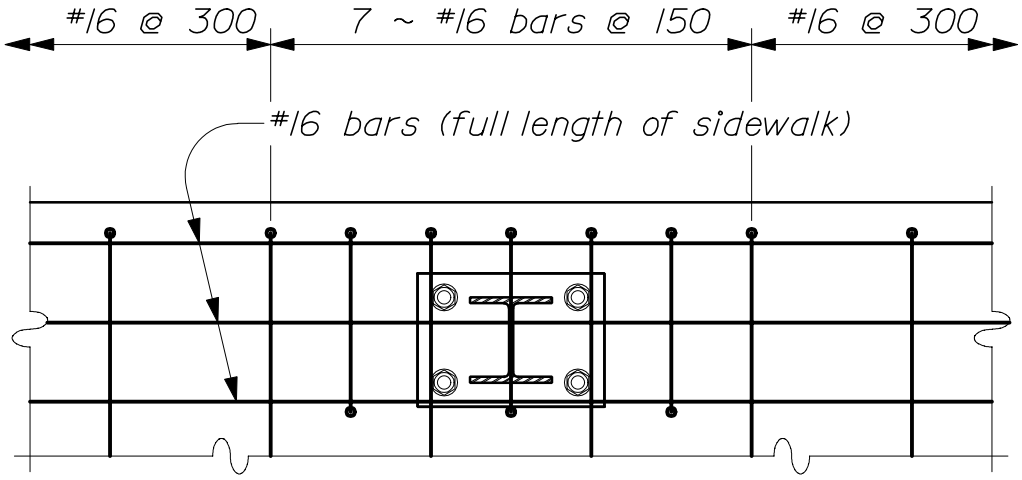

-- SIDEWALK REINFORCING PLAN --

NOTES:

1.) All work and materials shall conform to the provisions of Section 507 - Railings of the Standard Specifications.

2.) Tubing shall meet the longitudinal CVN minimum requirements of 20 Joules at -18° C or proportional values of sub - size specimens. Testing shall be done in accordance with ASTM A 673. The H frequency shall be used and the material shall be as - rolled.

3.) Twenty - five percent of the post - to - base welds in a production lot shall be tested by the Magnetic Particle Method. If rejectable discontinuities are found, another twenty - five percent of that production lot shall be tested. If rejectable discontinuities are found in the second twenty - five percent, all post - to - base welds in that lot shall be tested. Acceptance criteria shall be in accordance with the latest edition of the AWS D1.5 Bridge Welding Code.

STEEL BRIDGE RAILING

507(11)

NOTES (Continued):

4. All exposed cut or sheared edges shall be broken and free of burrs. The inside weld flash of tubing shall be removed at splices and expansion joints.

5. Rail posts shall be set normal to grade unless otherwise shown.

6. Lengths of rail bar shall be attached to a minimum of two (2) rail posts and to at least four (4) posts whenever possible.

7. Rail bar expansion joints shall be provided in any rail bay spanning a superstructure expansion joint. Expansion joint width shall be "X" at 7° C and will be adjusted in the field as directed by the Resident. Refer to detail and table on page 507(10) for dimension "X".

8. All parts shall be galvanized after fabrication in accordance with ASTM A 123, except that hardware shall meet the requirements of either ASTM A 153 or ASTM B 695, Class 50, Type I. Parts except hardware shall be blast - cleaned prior to galvanizing in accordance with SSPC - SP6.

9. Anchor bolts shall be set with a template. Nuts securing the post base plate shall be tightened to a snug fit and given an additional 1/8 turn.

10. Rail bars shall be attached to posts using M20 ~ ASTM F 568, Class 4.6 bolts (M16 ~ ASTM A 325M bolts may be substituted) inserted through the face of the rail bar. Bolts shall be round or dome head and may be rib neck, slotted, wrench head or tension control (TC or twist - off). Holes in posts shall be two (2) mm larger than the diameter of the bolt. Holes in rail bars shall be drilled to size as follows:

Slotted, wrench head or TC bolts---------Two (2) mm larger than bolt diameter
Rib neck bolts----------Size appropriate to accomodate an interference fit

All bolts for fastening the rail bars to the posts shall be 150 mm in length and shall include a flat washer under nut.

11. Holes in rail bars shall be field - drilled and shall be coated with an approved zinc - rich paint prior to erection.

12. Bolts in expansion joints shall be tightened only to a point that will allow rail movement.

13. The alternate curb projection shown for the curb - mounted railings is intended for use with granite bridge curb.

14. If there is a conflict between these Standard Details and the Design Drawings, the Contractor shall notify the Resident immediately.

STEEL BRIDGE RAILING

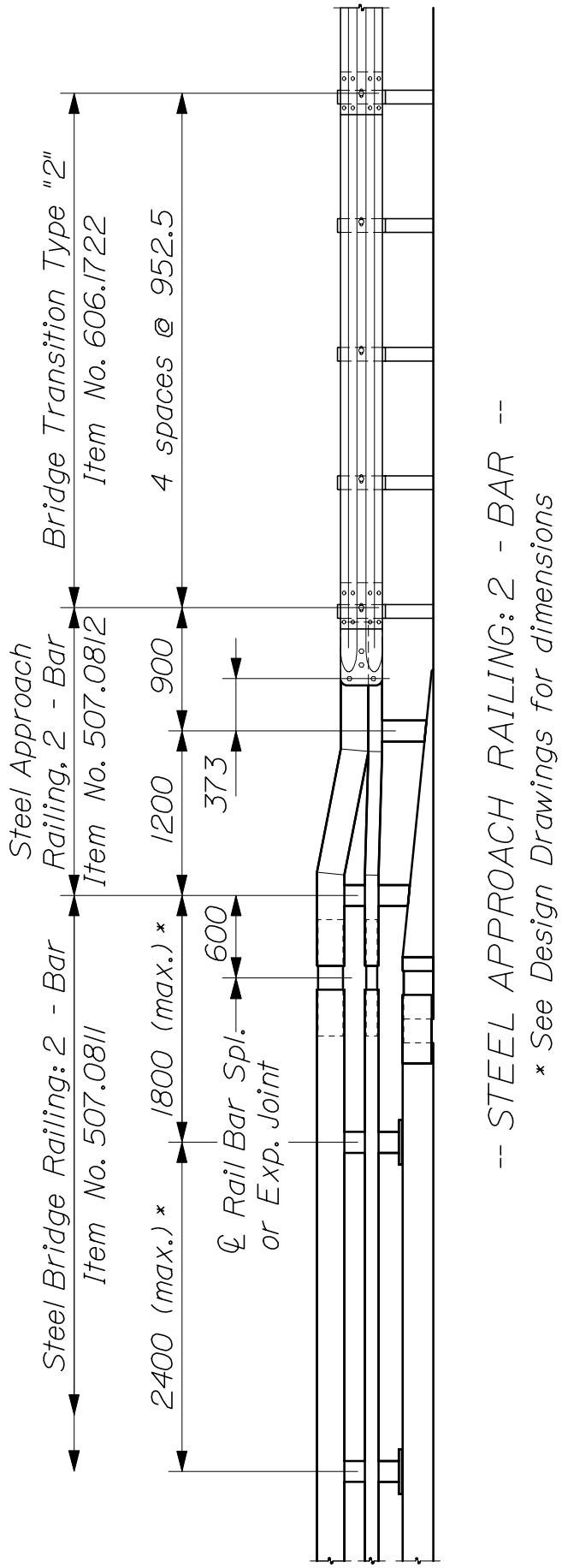

STEEL APPROACH RAILING

507(13)

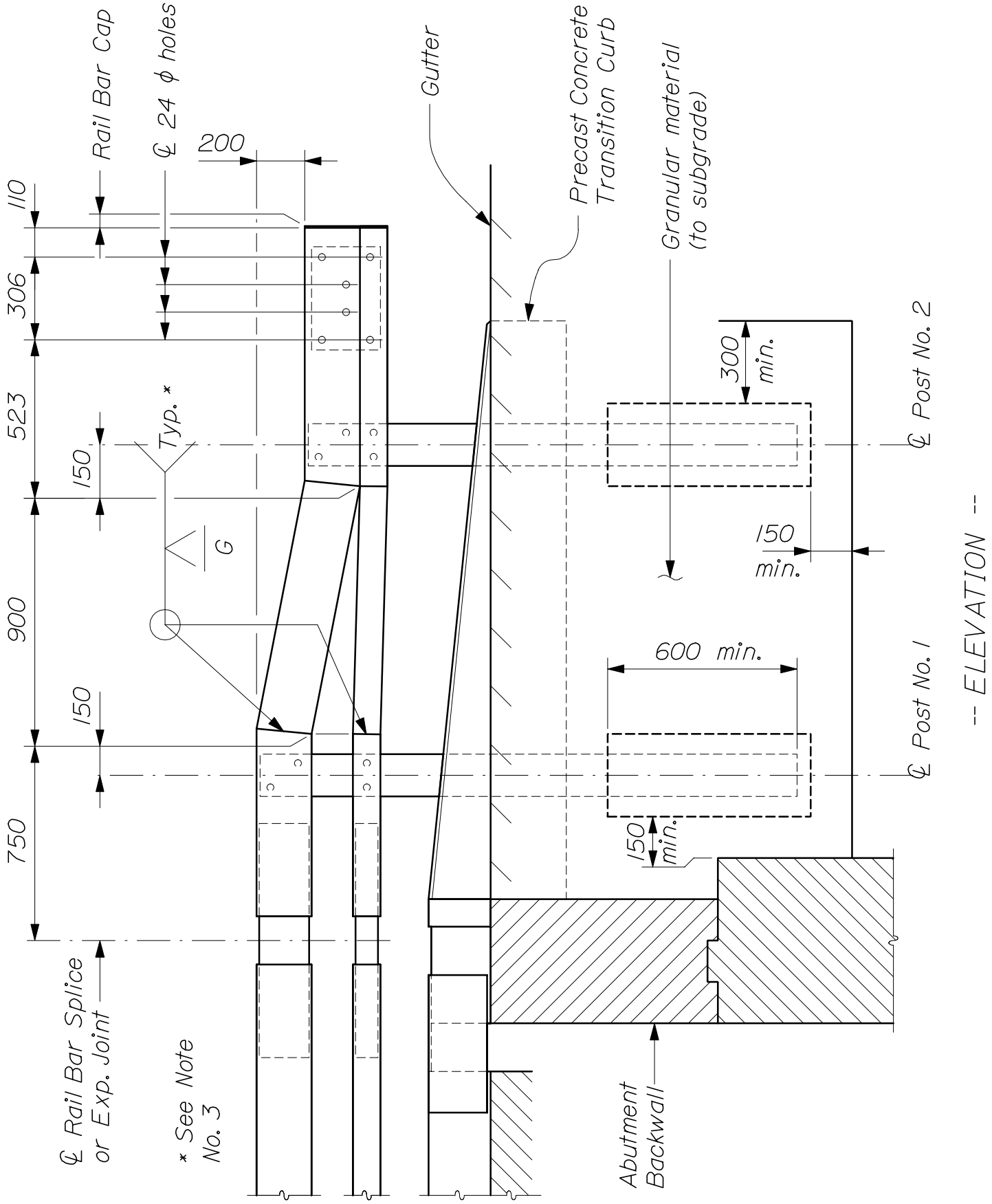

STEEL APPROACH RAILING

507(14)

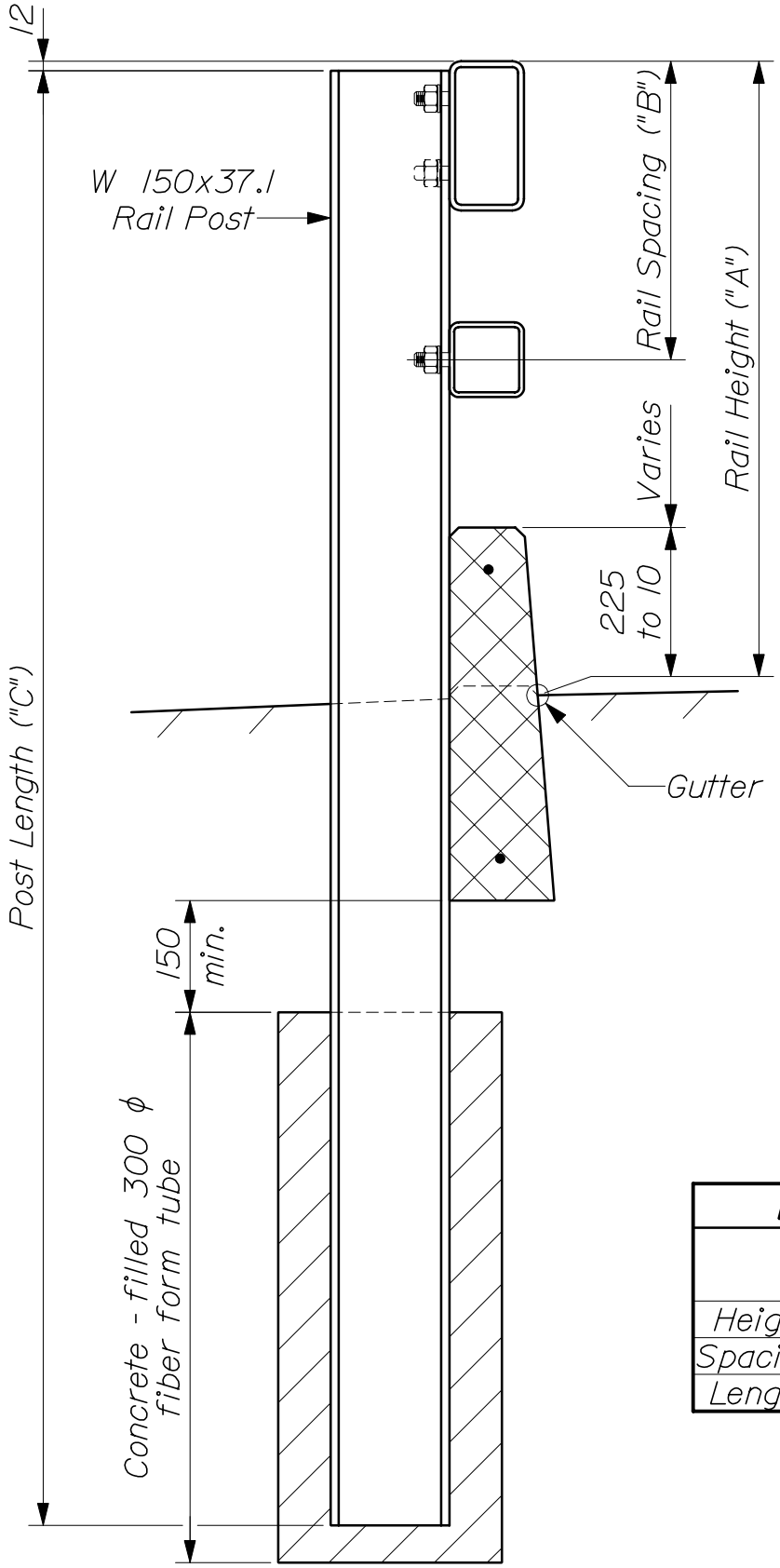

DIMENSIONS		
	Post No. 1	Post No. 2
Height "A"	850	650
Spacing "B"	400	255
Length "C"	2000	1800

-- TYPICAL SECTION --

STEEL APPROACH RAILING

507(15)

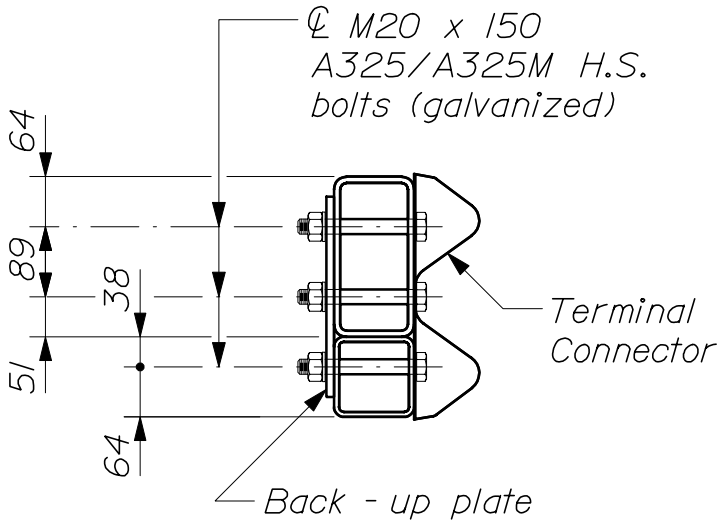

-- SECTION THROUGH
TERMINAL CONNECTOR --

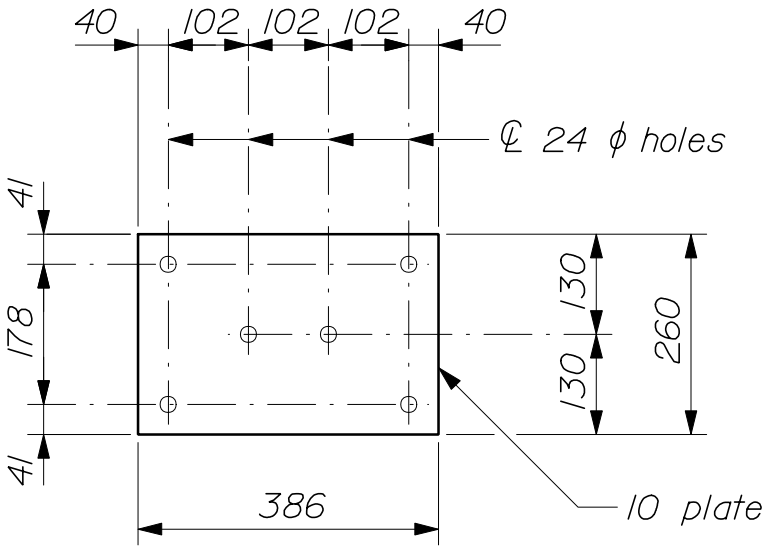

-- BACK - UP PLATE --

STEEL APPROACH RAILING

507(16)

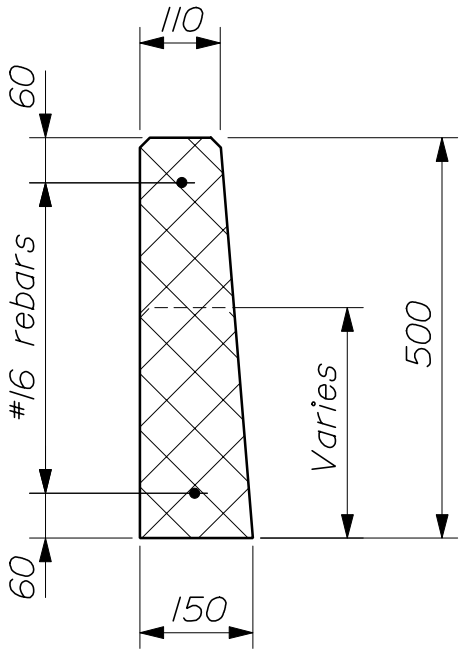

-- CURB SECTION --

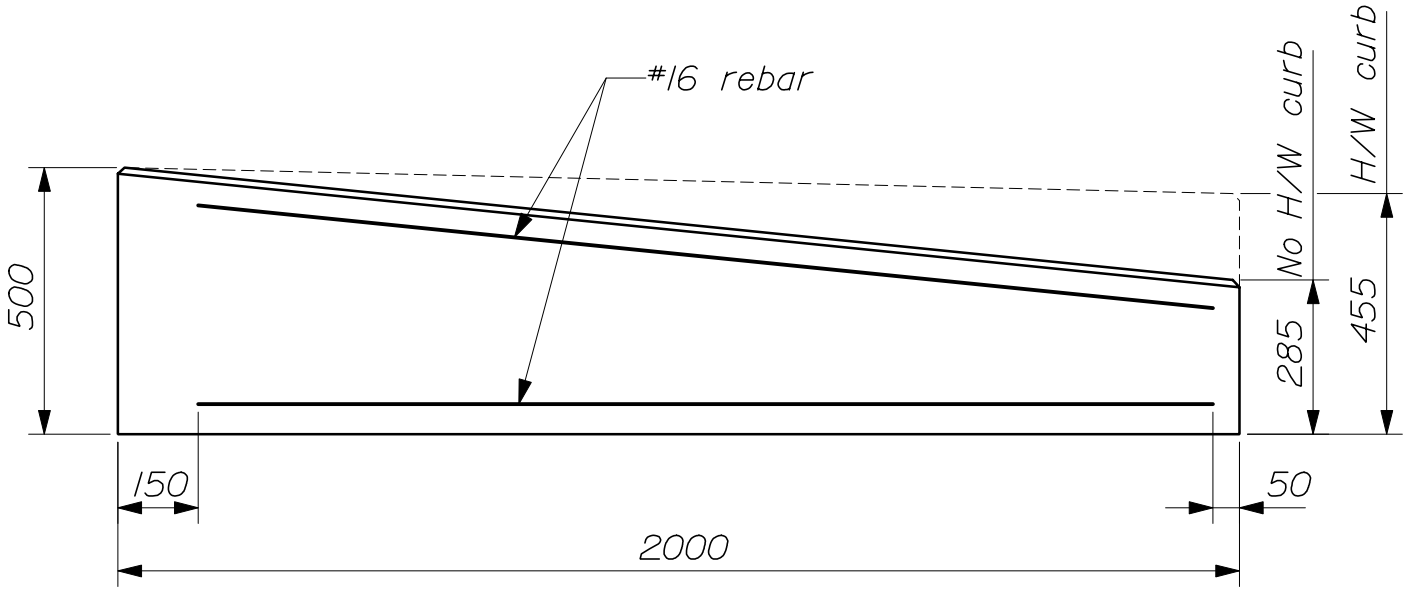

-- PRECAST CONCRETE TRANSITION CURB --

STEEL APPROACH RAILING

507(17)

NOTES:

1. Refer to Steel Bridge Railing pages for additional details, notes and materials specifications.

2. The bottom rail bar may be bent to shape from one continuous length of stock provided that the fabricator can achieve the required geometry without deforming the tube.

3. Rail bar welds shall have a minimum penetration of 80% as demonstrated by a test weld performed by the fabricator.

4. To facilitate field fit - up of the approach railing, posts shall be set loosely into fiber form tubes while parts are being assembled. Post holes shall be backfilled with Class "S" or other concrete mix approved by the Resident. Payment will be considered incidental to the Steel Approach Railing pay item.

5. Granular material shall meet or exceed the requirements of Subsection 703.19, Granular Borrow. Payment for granular material and for any excavation necessary to install the rail posts will be considered incidental to the Steel Approach Railing pay item.

6. The precast concrete transition curb shall meet the provisions of Section 609 - Curbing of the Standard Specifications. The bridge end of the curb shall be saw - cut in the field to fit flush against the backwall, as dictated by the bridge skew angle and the profile grade. Where curbing is specified on the adjacent highway, the transition shall be modified accordingly. Payment for transition curb will be considered incidental to the Steel Approach Railing pay item.

7. The Bridge Transition Type "2" as shown is a slight modification of the standard Type "2" detail shown in Section 606. The M20 bolts and back - up plate will be considered as part of the Steel Approach Railing pay item.

8. After installation of the guard rail is complete, upset the threads on the anchor bolts in three (3) places around each bolt, at the junction of the nut and the exposed thread, with a center punch or similar tool.

9. If there is a conflict between these Standard Details and the Design Drawings, the requirements of the Design Drawings shall be followed.

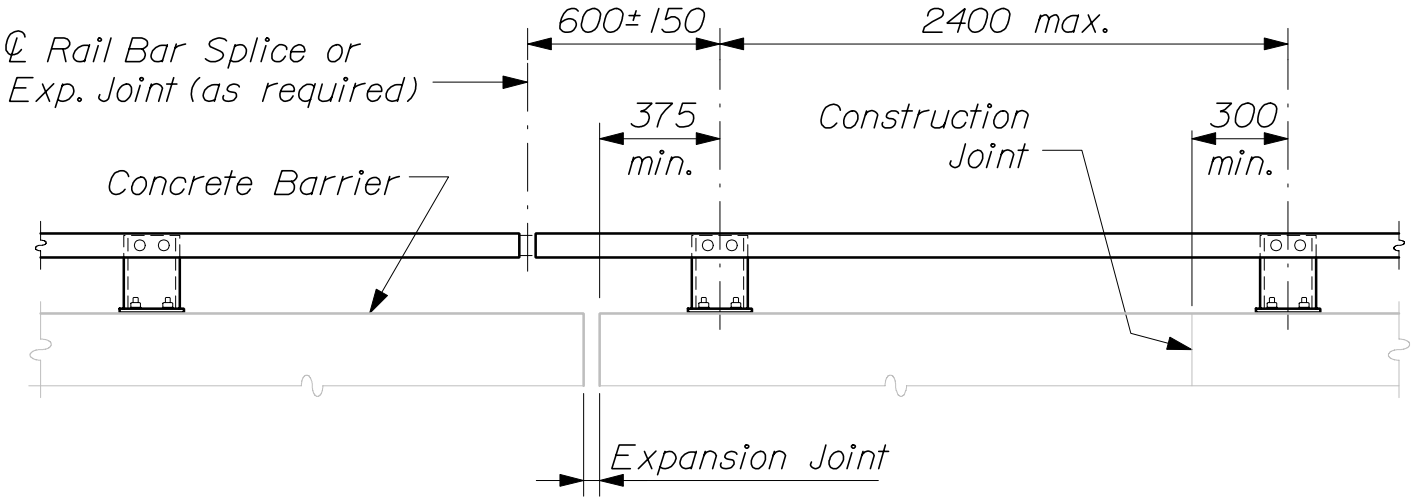

-- 1 - BAR PEDESTRIAN RAILING --

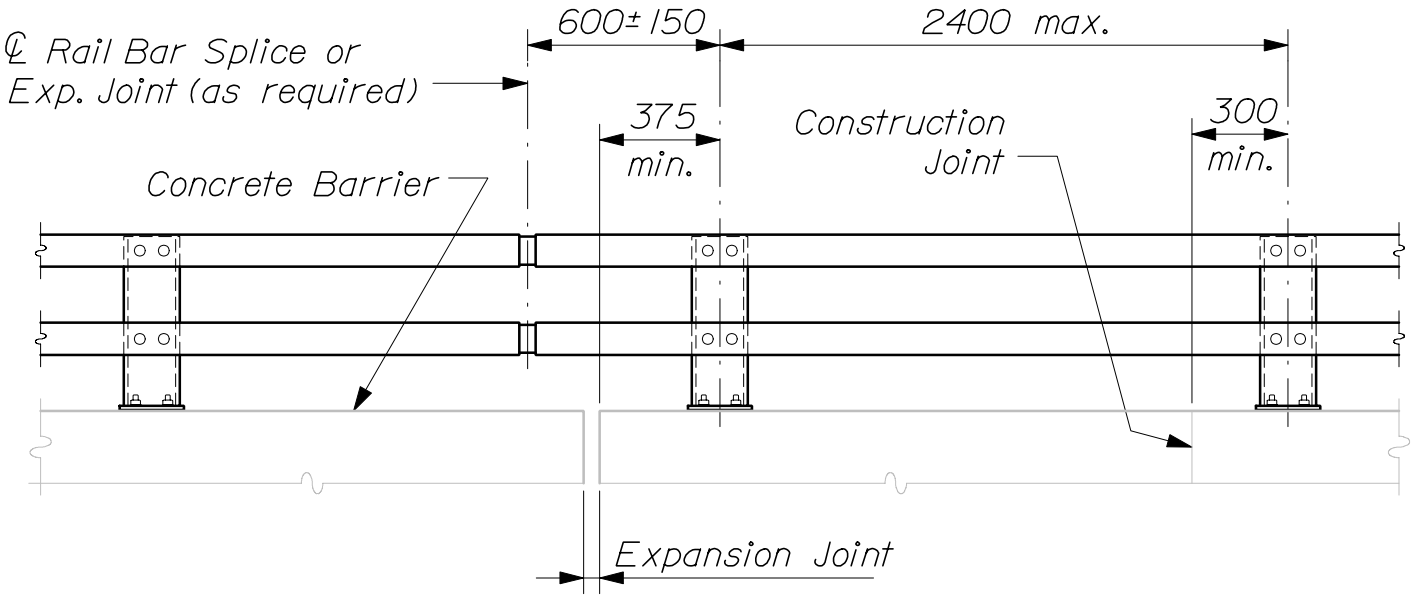

-- 2 - BAR BICYCLE RAILING --

BARRIER - MOUNTED STEEL BRIDGE RAILING

507(19)

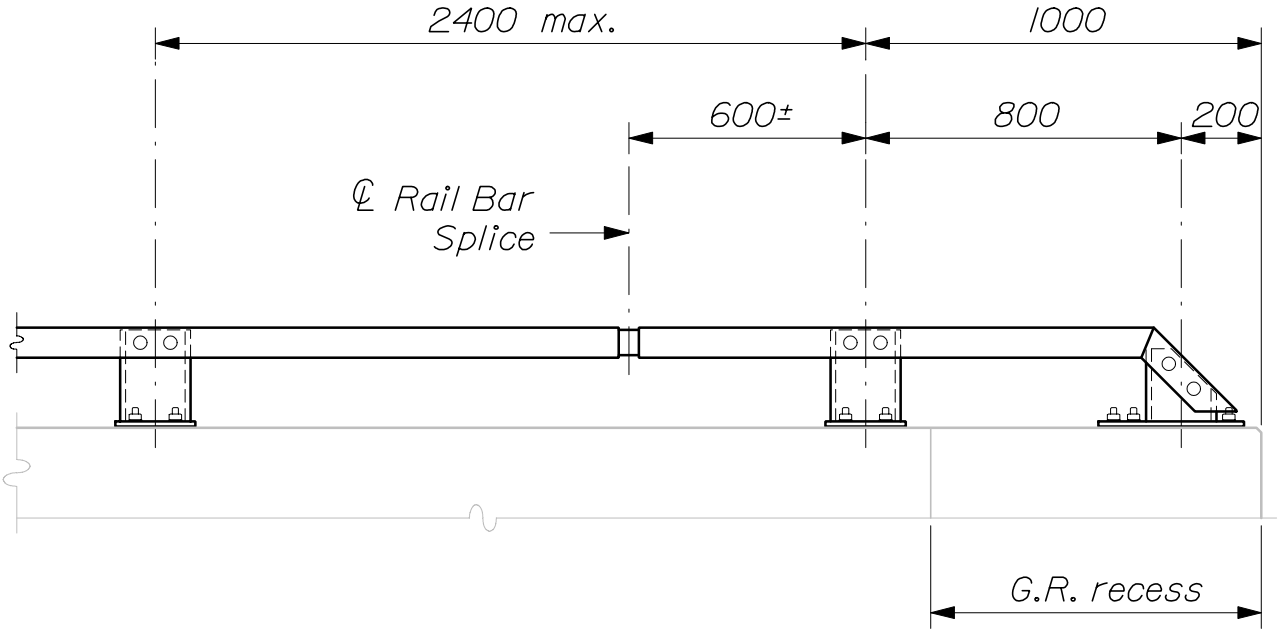

-- 1 - BAR PEDESTRIAN RAILING --
(Showing End Treatment)

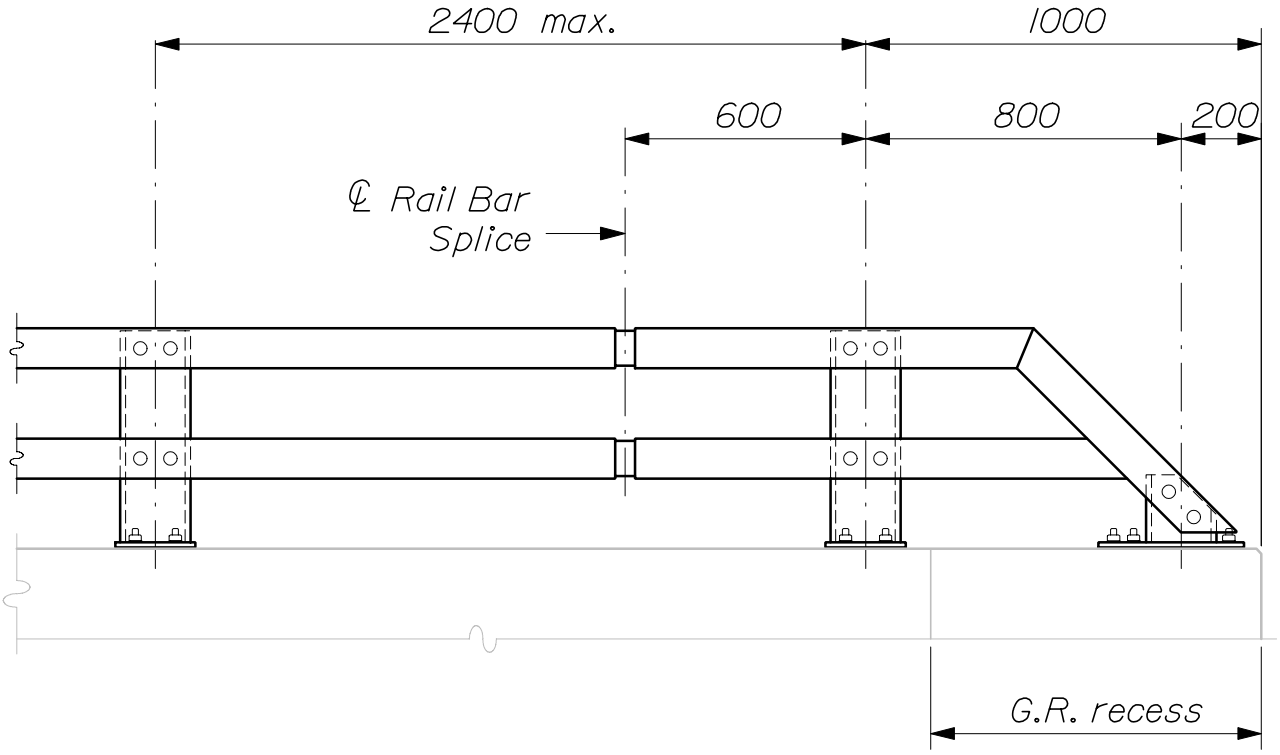

-- 2 - BAR BICYCLE RAILING --
(Showing End Treatment)

BARRIER - MOUNTED STEEL BRIDGE RAILING

507(20)

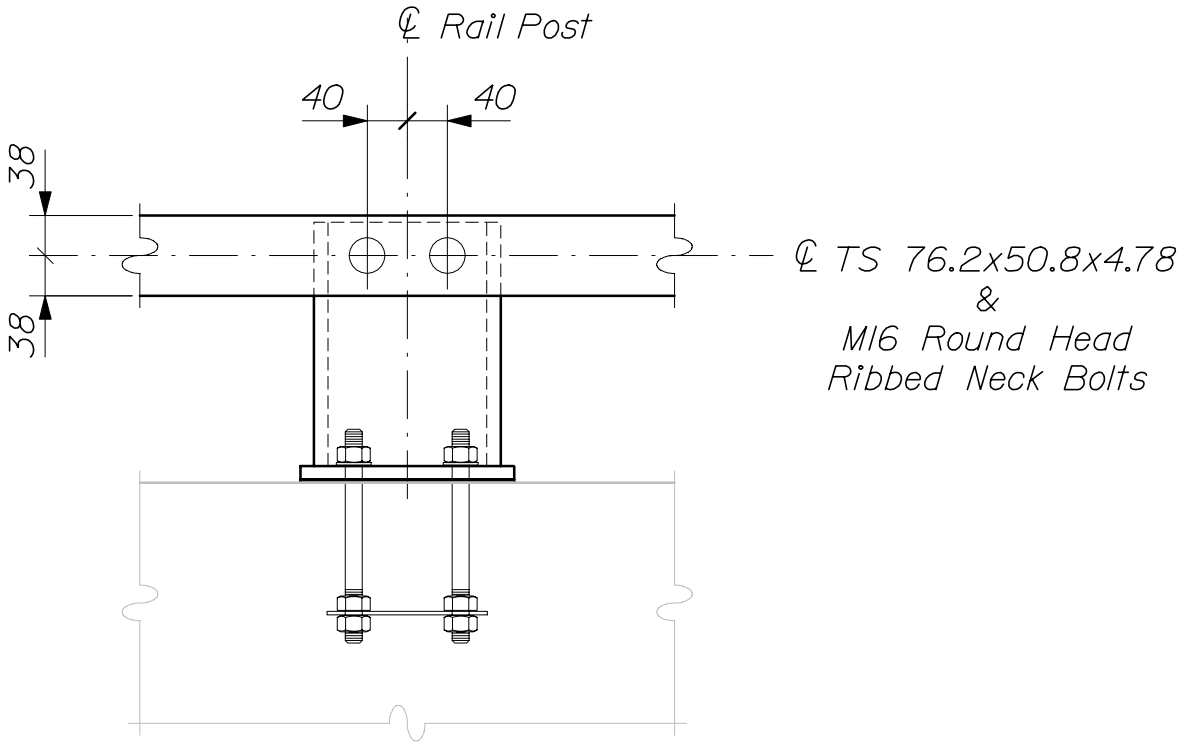

-- RAIL & POST ELEVATION --
(1 - Bar Pedestrian Railing)

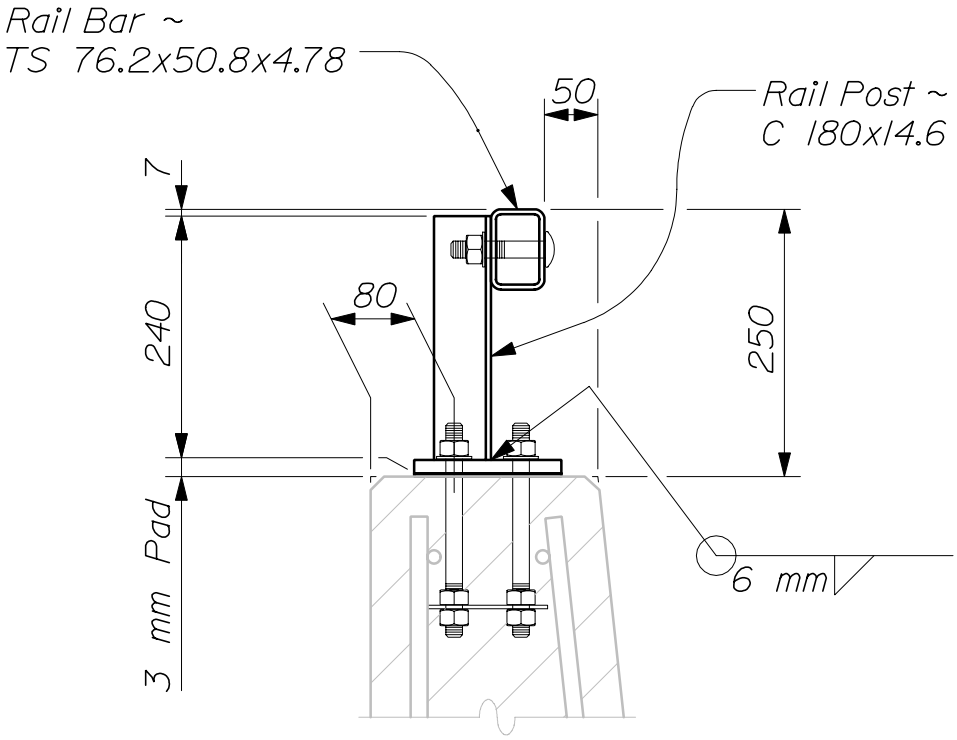

-- TYPICAL RAIL SECTION --
(1 - Bar Pedestrian Railing)

BARRIER - MOUNTED STEEL BRIDGE RAILING

507(21)

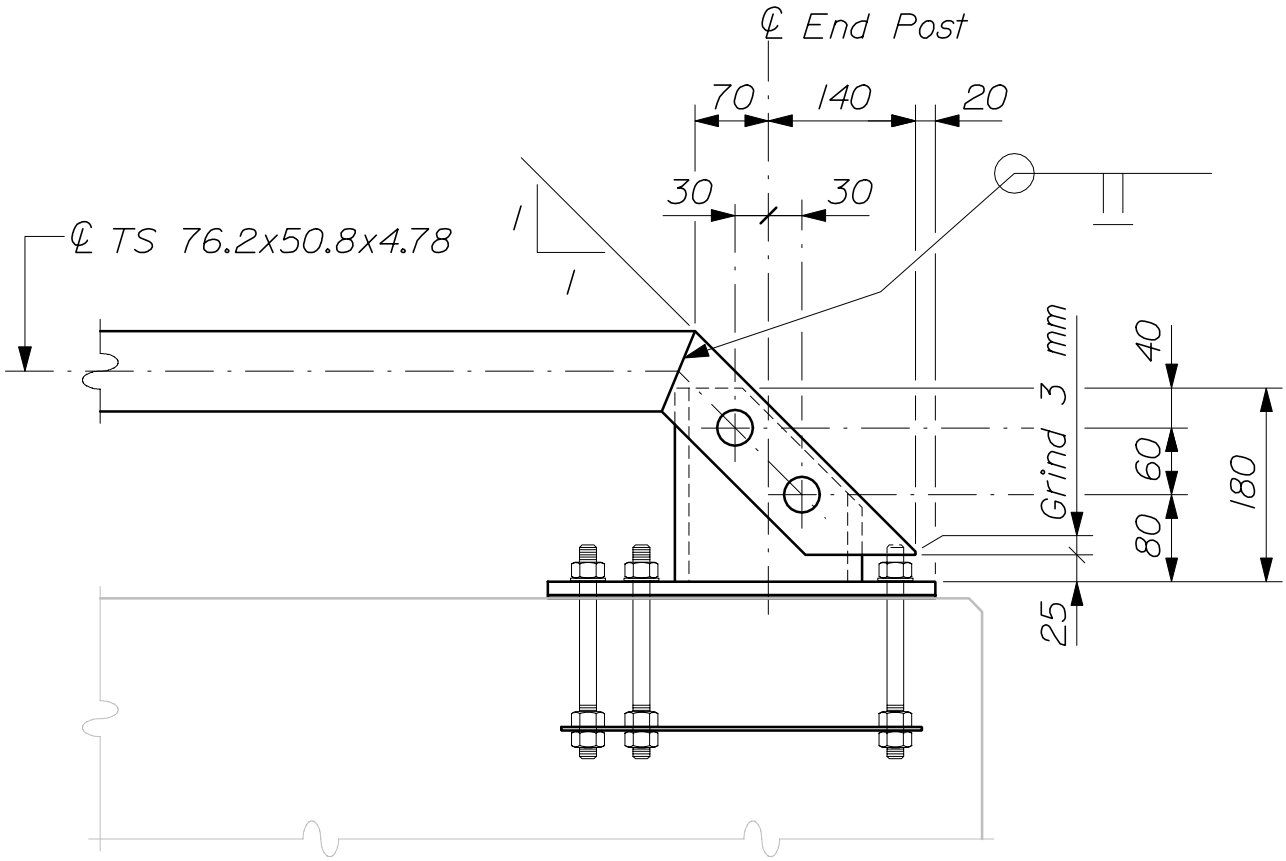

-- RAIL END TREATMENT --
(1 - Bar Pedestrian Railing)

BARRIER - MOUNTED STEEL BRIDGE RAILING

507(22)

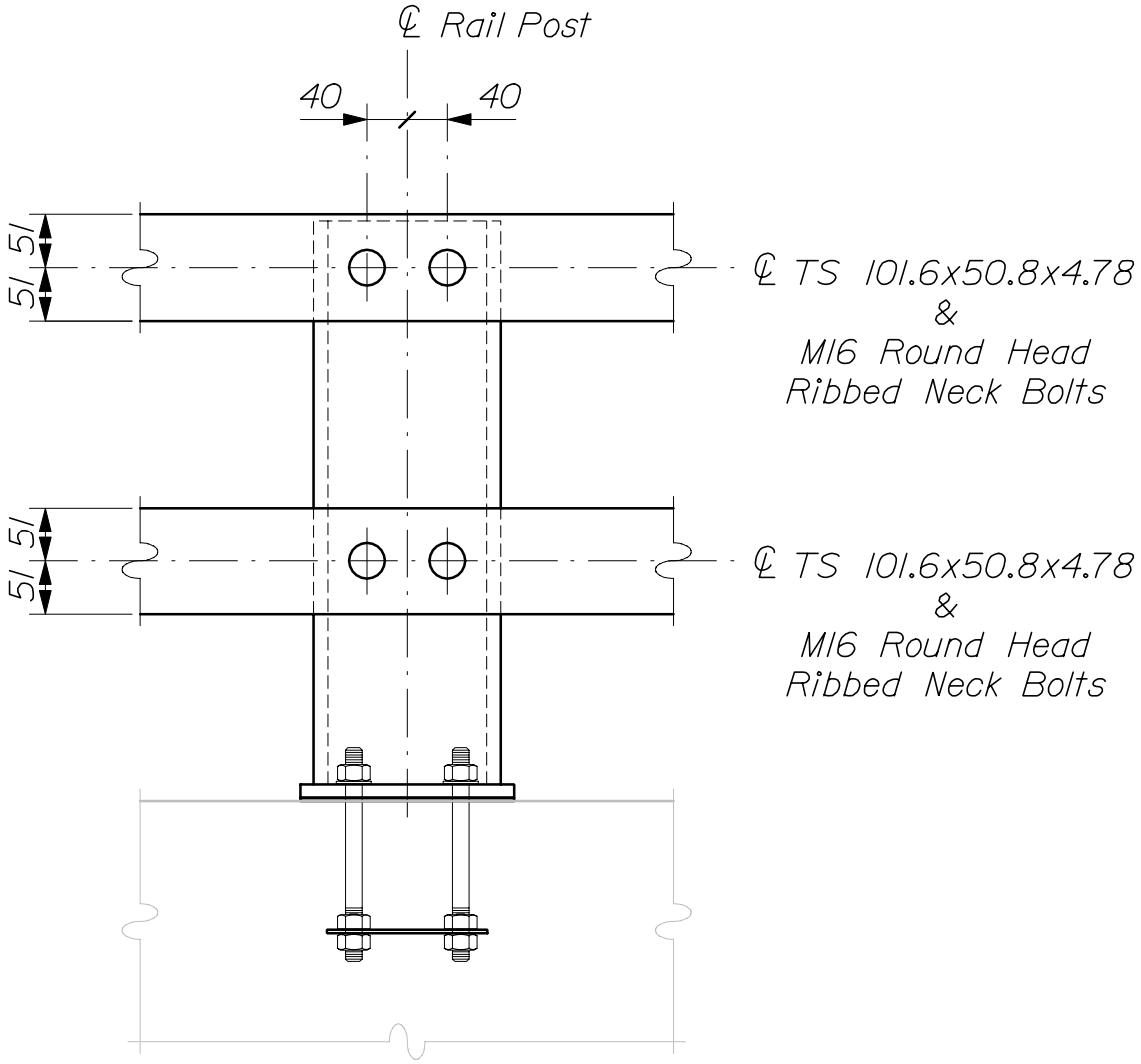

-- RAIL & POST ELEVATION --
(2 - Bar Bicycle Railing)

BARRIER - MOUNTED STEEL BRIDGE RAILING

507(23)

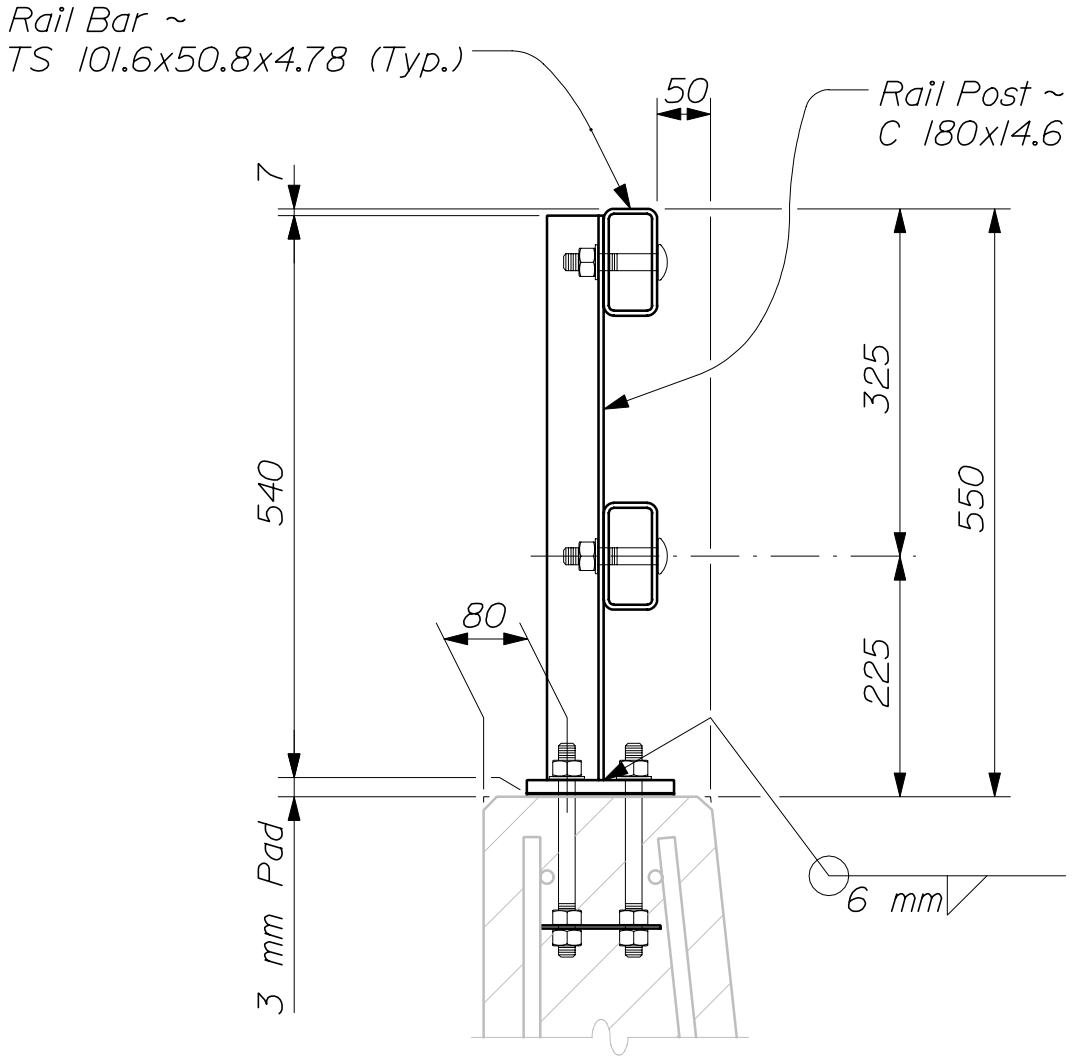

-- TYPICAL RAIL SECTION --
(2 - Bar Bicycle Railing)

BARRIER - MOUNTED STEEL BRIDGE RAILING

507(24)

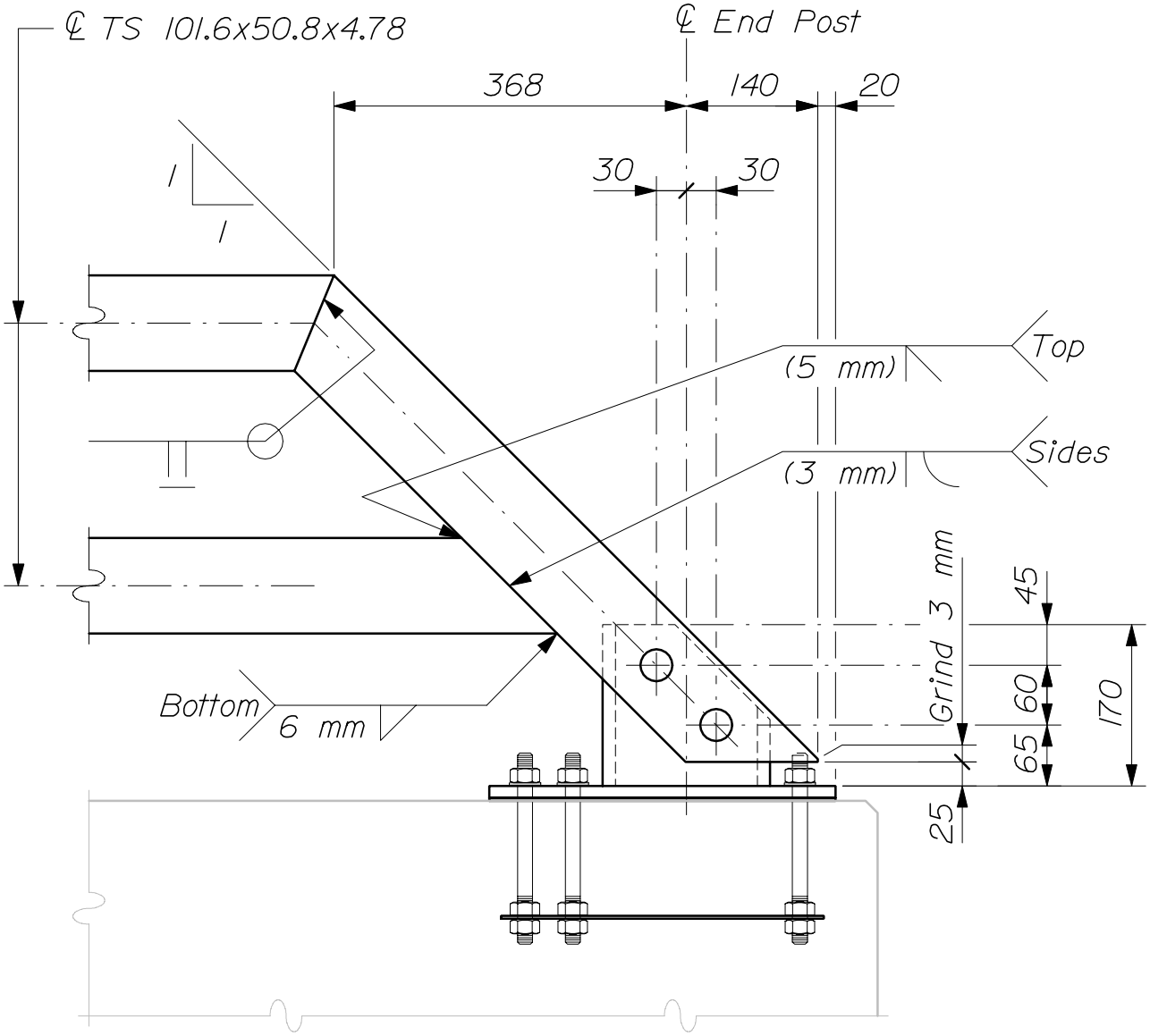

-- RAIL END TREATMENT --
(2 - Bar Bicycle Railing)

BARRIER - MOUNTED STEEL BRIDGE RAILING

507(25)

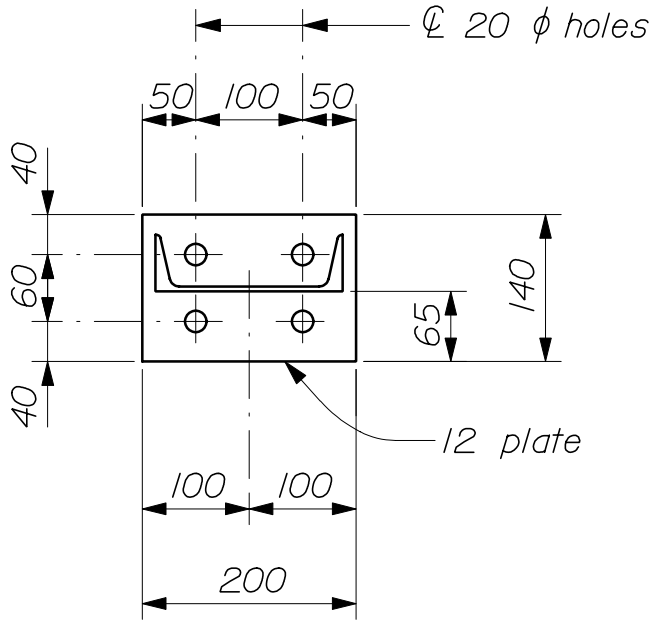

-- POST & BASE PLATE PLAN --

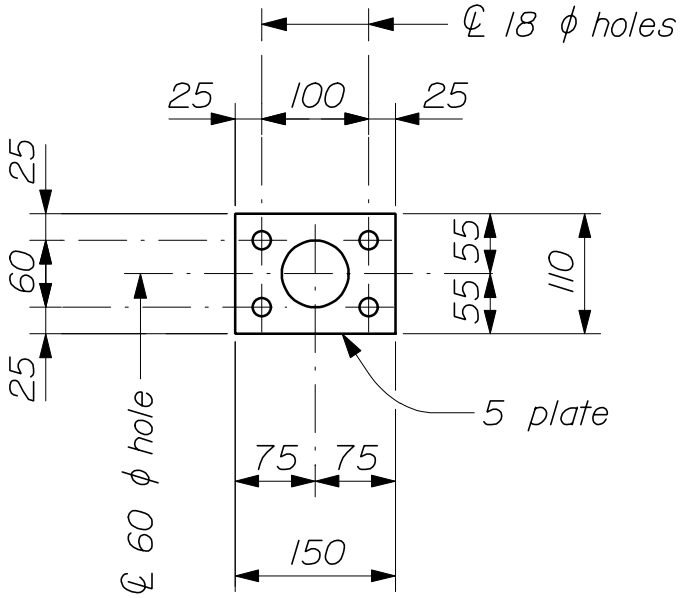

-- SPACER PLATE PLAN --

BARRIER - MOUNTED STEEL BRIDGE RAILING

507(26)

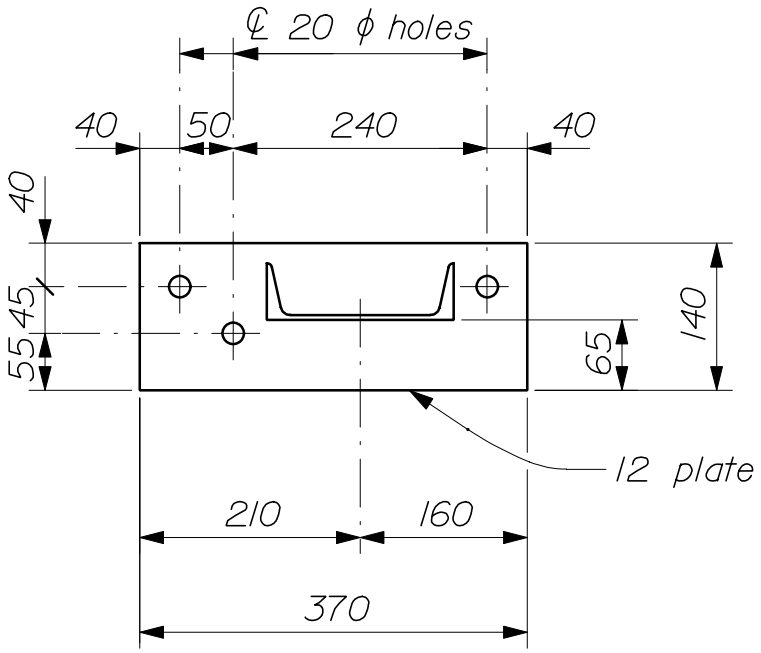

-- END POST & BASE PLATE PLAN --

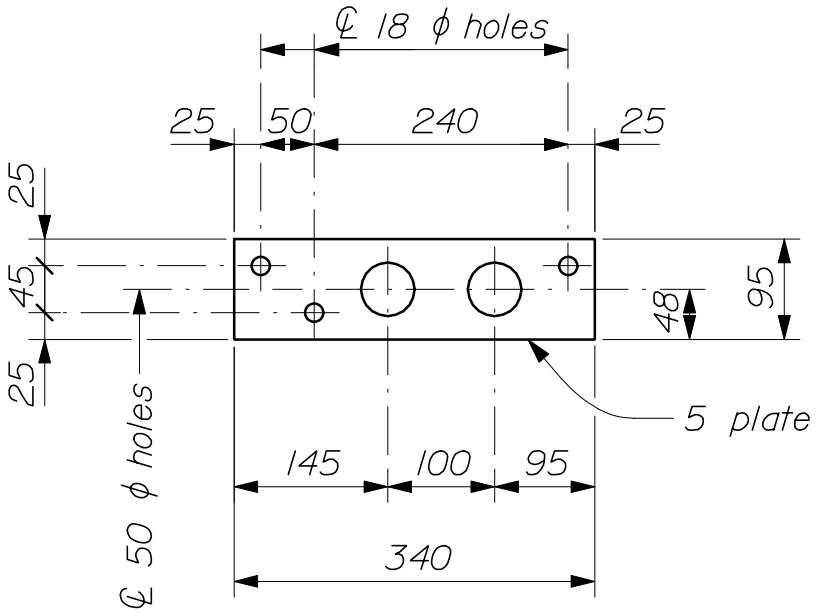

-- END SPACER PLATE PLAN --

BARRIER - MOUNTED STEEL BRIDGE RAILING

507(27)

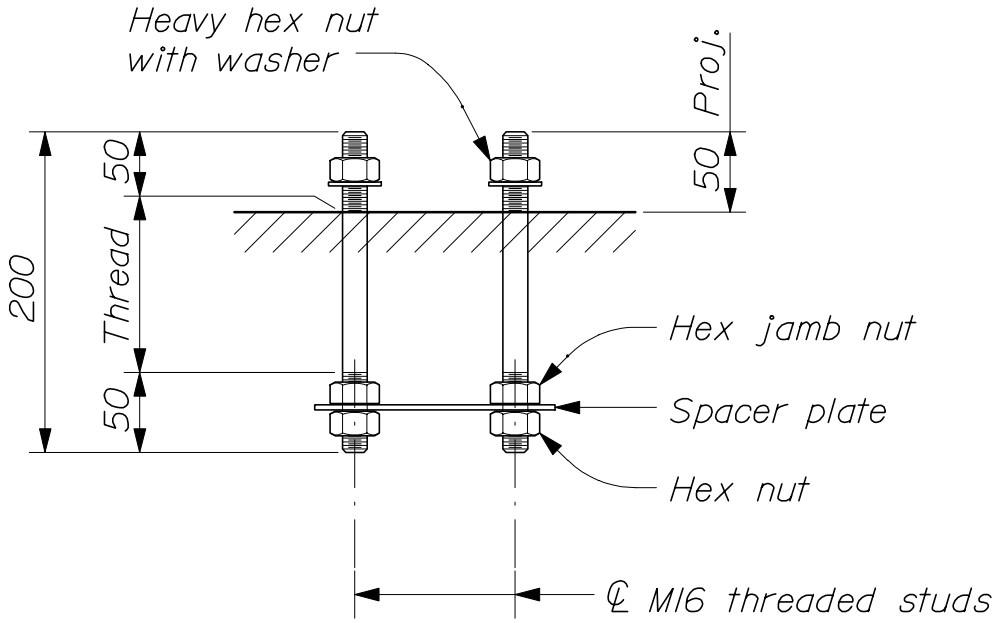

-- ANCHOR BOLT DETAIL --

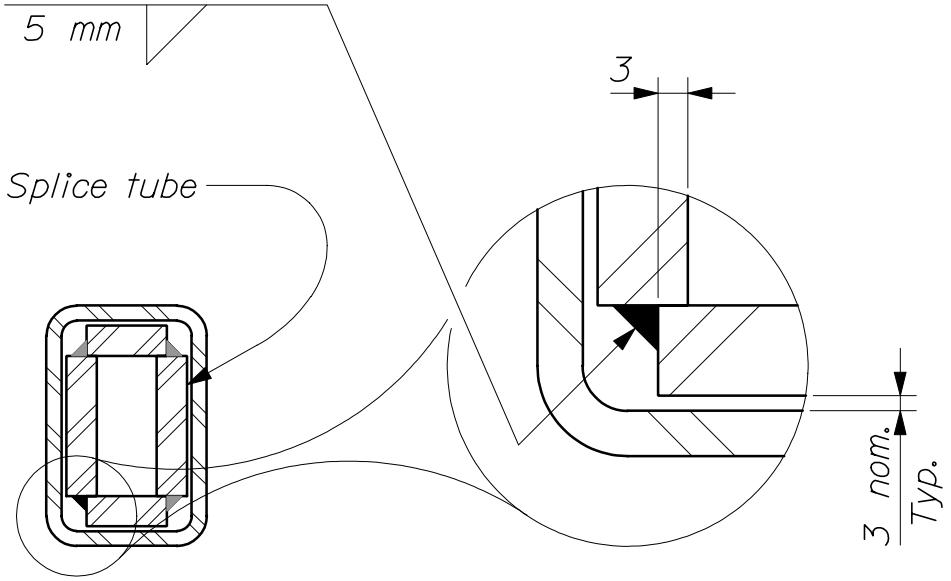

-- RAIL SPLICE SECTION --

BARRIER - MOUNTED STEEL BRIDGE RAILING

507(28)

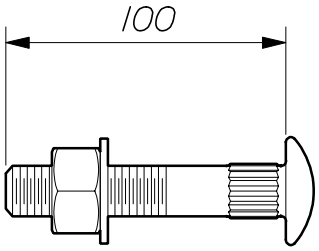

-- RIBBED NECK BOLT --
(with washer & lock nut)

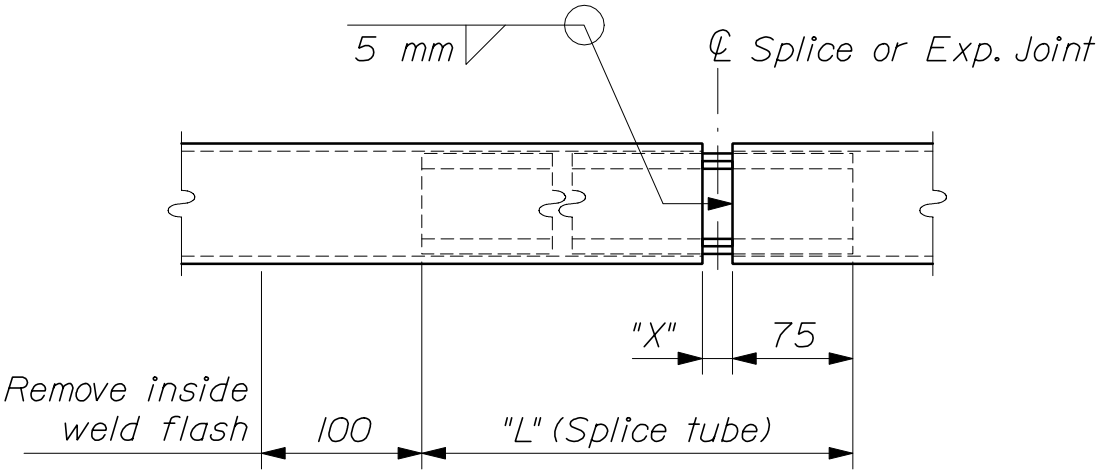

-- RAIL BAR SPLICE / EXPANSION JOINT --

RAIL BAR SPLICE & EXPANSION JOINT TABLE		
"T"	"L"	"X"
Splice	500	20
≤100	500	65
>100≤165	600	100
>165≤225	700	125
>225≤330	850	175

"T" = Total Movement

SPLICE TUBE (1 - Bar Railing)	
Top & Bot. Plates	Bar 21x10 x "L"
Side Plates	Bar 40x10 x "L"

SPLICE TUBE (2 - Bar Railing)	
Top & Bot. Plates	Bar 21x10 x "L"
Side Plates	Bar 66x10 x "L"

BARRIER - MOUNTED STEEL BRIDGE RAILING

507(29)

NOTES:

1. All work and materials shall conform to the provisions of Section 507 - Railings of the Standard Specifications.

2. All exposed cut or sheared edges shall be rounded and free of burrs.

3. All parts shall be galvanized after fabrication in accordance with ASTM A123, except that hardware shall meet the requirements of ASTM A153. Parts shall be blast - cleaned prior to galvanizing in accordance with SSPC - SP6.

4. Rail posts shall be set normal to grade unless otherwise indicated.

5. Lengths of rail bar shall be attached to a minimum of two (2) rail posts and to at least four (4) posts whenever possible.

6. Rail bar expansion joints shall be provided in any rail bay spanning a superstructure expansion joint. Expansion joint width shall be "X" at 7 °C and will be adjusted as directed by the Resident.

7. Holes for ribbed - neck bolts shall be field - drilled to an appropriate size to produce an interference fit with the bolts.

8. Rail post anchoring nuts shall be tightened to a snug fit and given an additional 1/8 turn.

9. Ten percent of the post - to - base welds in a production lot shall be tested by the Magnetic Particle Method. If rejectable discontuities are found, another ten percent of that lot shall be tested. If rejectable discontuties are found in the second ten percent, all post-to-base welds shall be be tested. Acceptable criteria shall be in accordance with the in edition of the AWS D1.5 Bridge Welding Code.

10. All butt joint welds shall have a minimum penetration of 60 percent.

11. If there is a conflict between these Standard Details and the Design Drawings, the requirements of the Design Drawings shall be followed.

MATERIALS:

Rail bars ---------- ASTM A500
All other shapes & plates ---------- AASHTO M183/M183 (ASTM A36/A36M)
Threaded studs, washers & exposed nuts ---------- ASTM F568, Class 8.8
All other bolts & nuts ---------- ASTM F568, Class 4.6

BARRIER - MOUNTED STEEL BRIDGE RAILING

507(30)

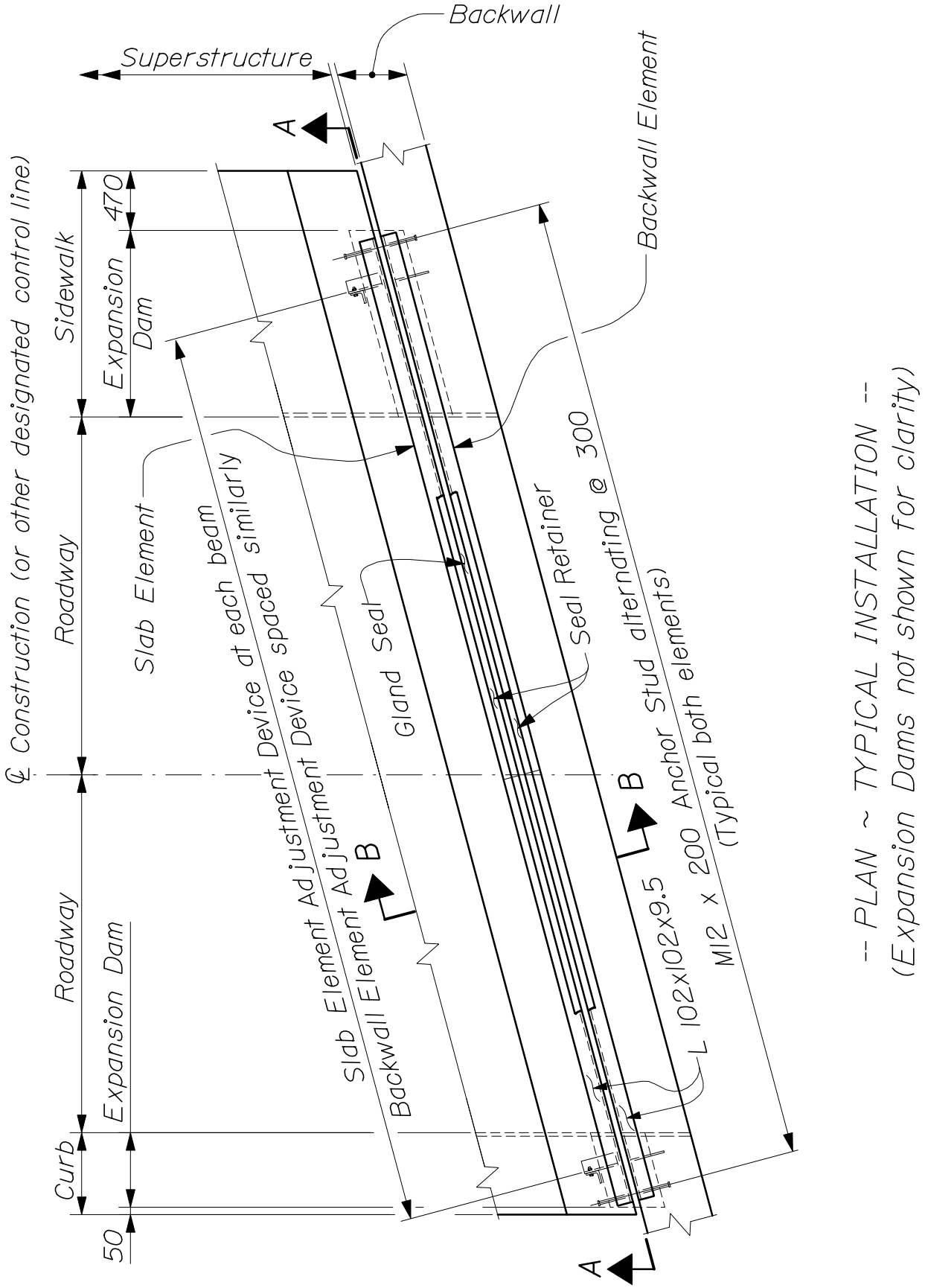

-- PLAN ~ TYPICAL INSTALLATION --
(Expansion Dams not shown for clarity)

EXPANSION DEVICE - GLAND SEAL

520(01)

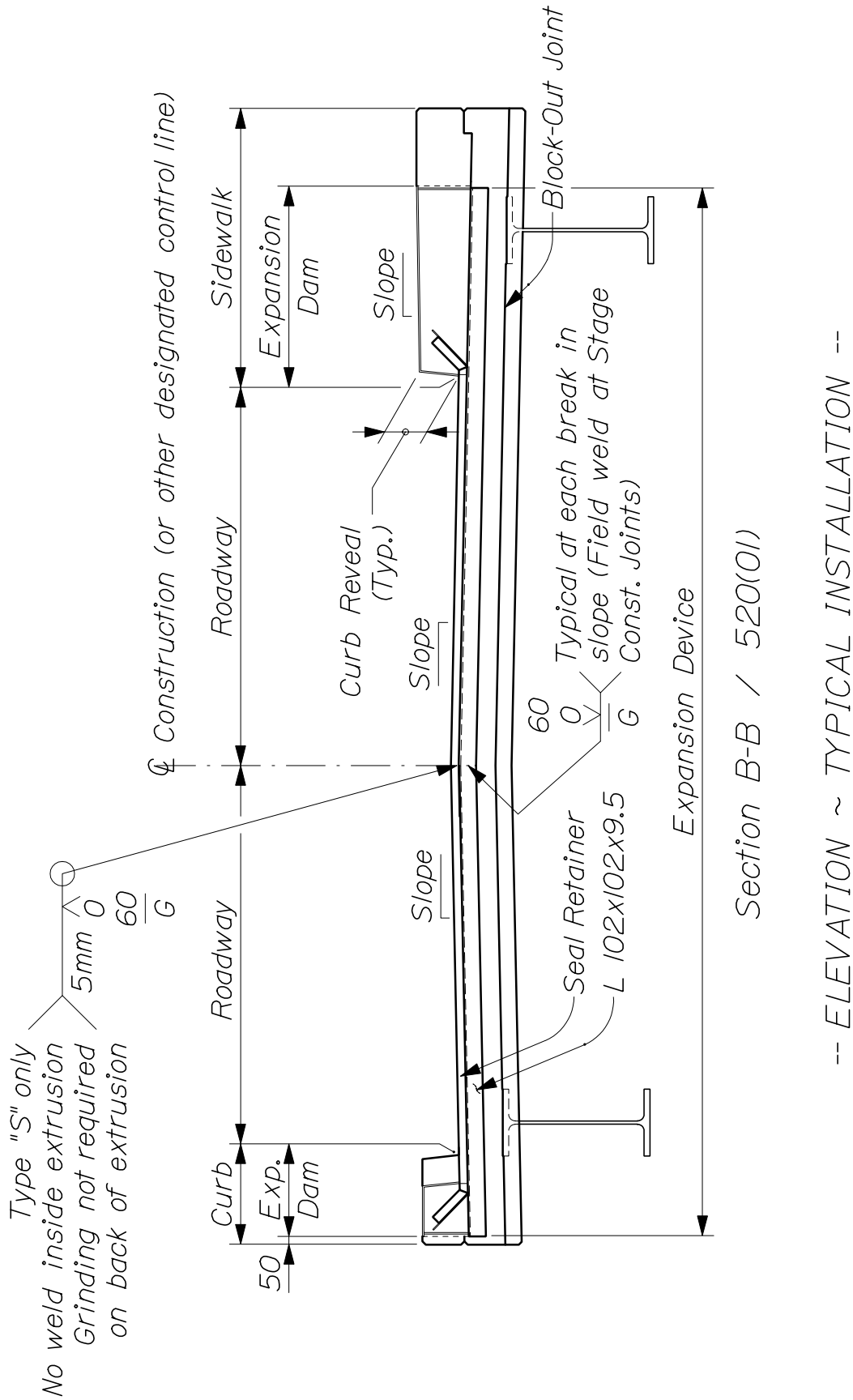

-- ELEVATION ~ TYPICAL INSTALLATION --

EXPANSION DEVICE - GLAND SEAL

520(02)

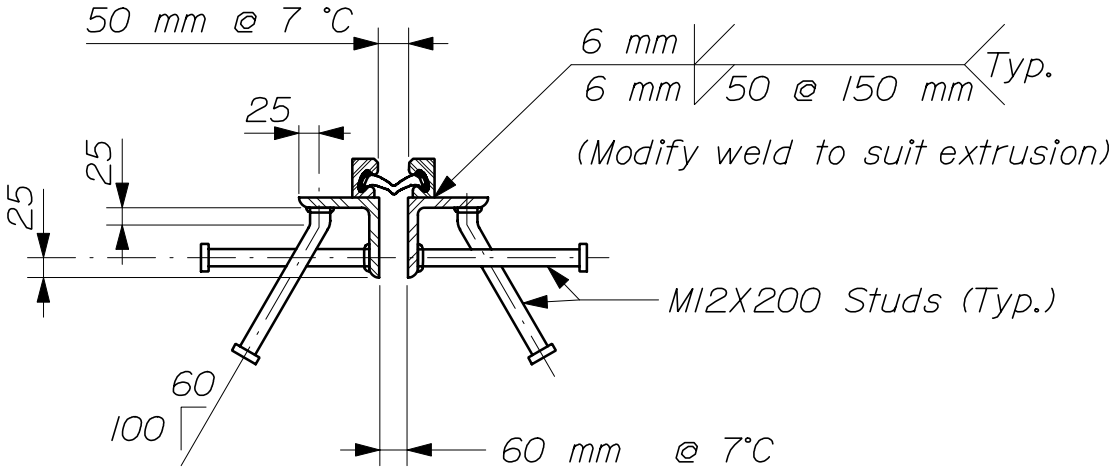

-- TYPICAL SECTION ~ TYPE "S" --
(Strip Seal & Extrusion Seal Retainer)

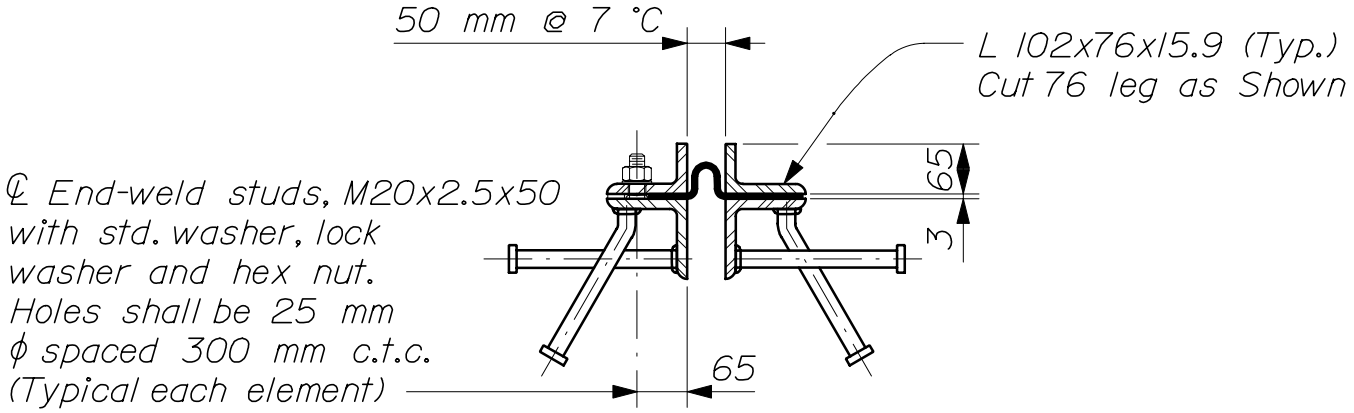

-- TYPICAL SECTION ~ TYPE "M" --
(Membrane Seal & Angle Seal Retainer)

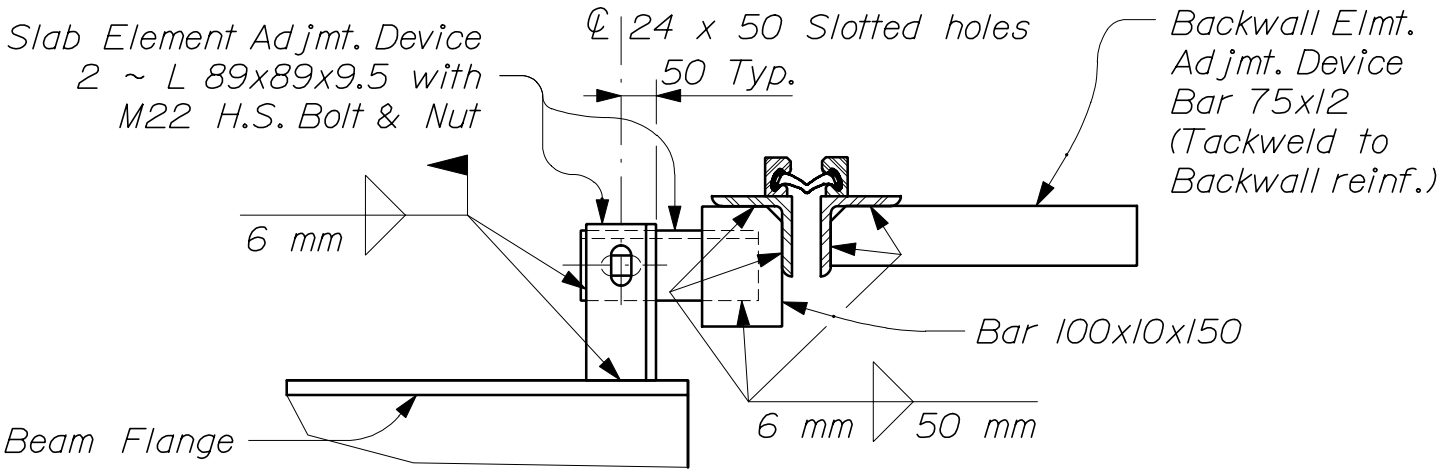

-- ADJUSTMENT DEVICE ~ DETAILS --

EXPANSION DEVICE - GLAND SEAL

520(03)

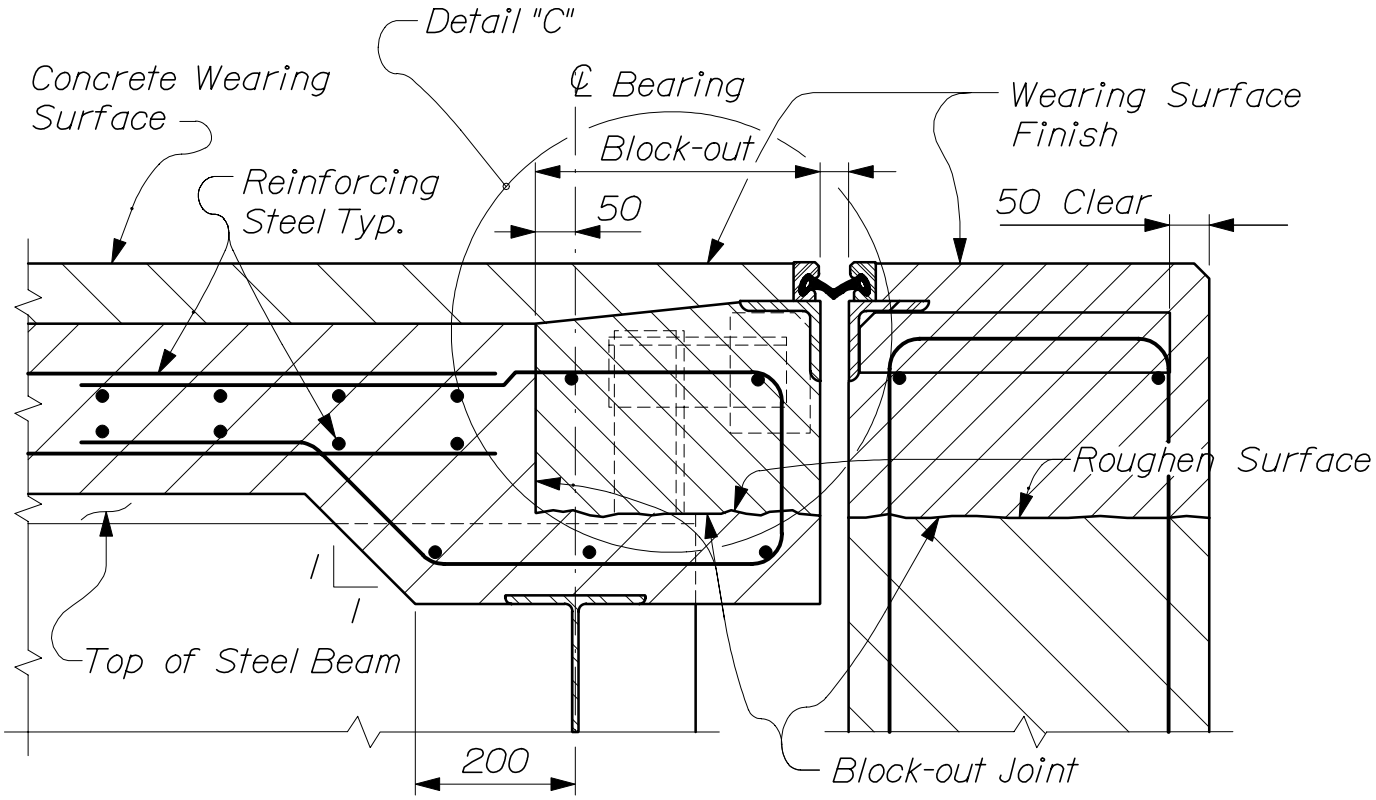

Section B-B / 520(01)
(Showing Concrete Wearing Surface)

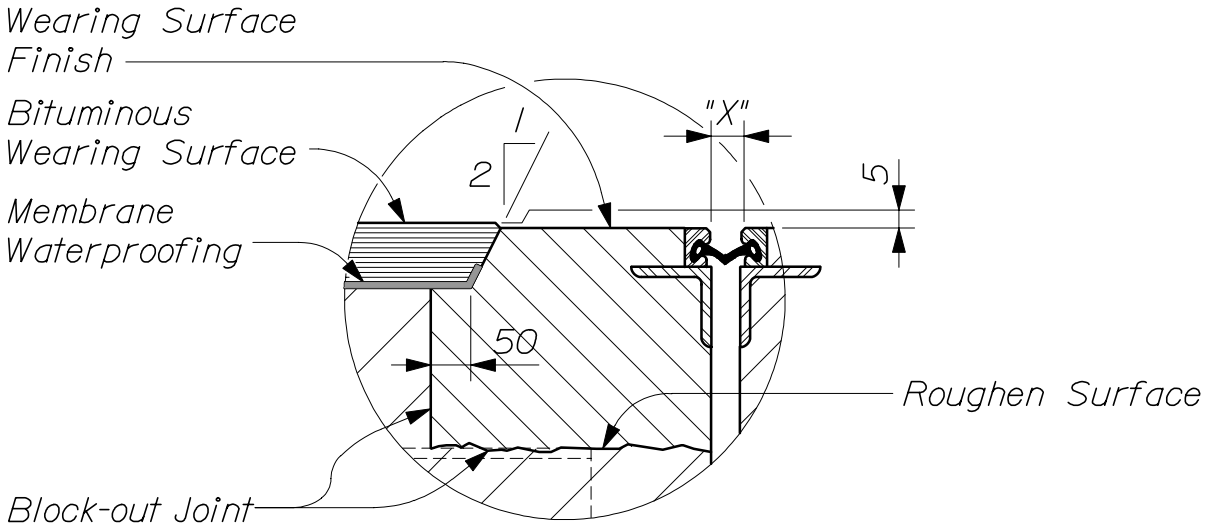

Detail "C"
(Showing Bituminous Wearing Surface)

-- CONCRETE BLOCK - OUT --

EXPANSION DEVICE - GLAND SEAL

520(04)

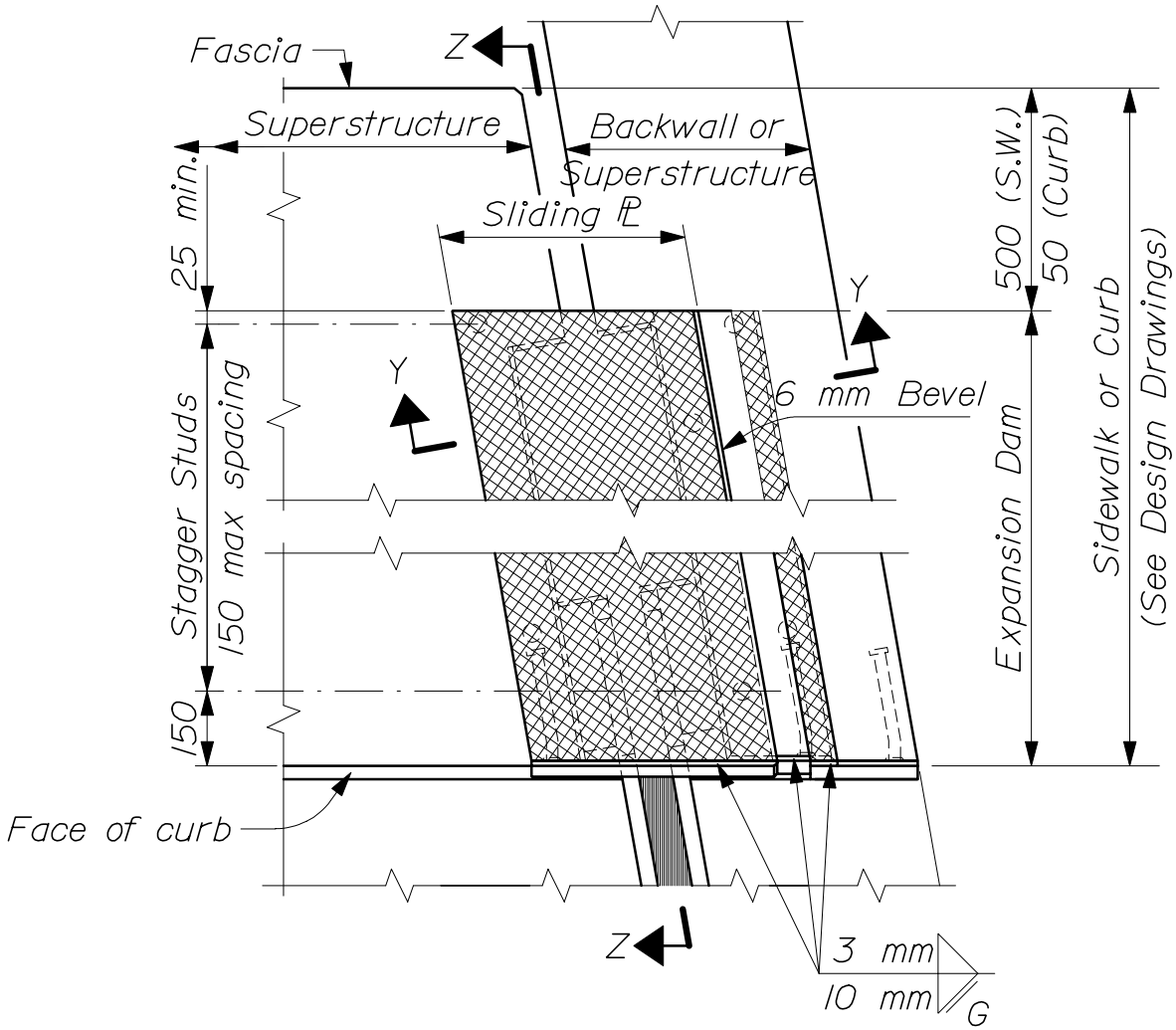

-- PLAN SIDEWALK / CURB EXPANSION DAM --

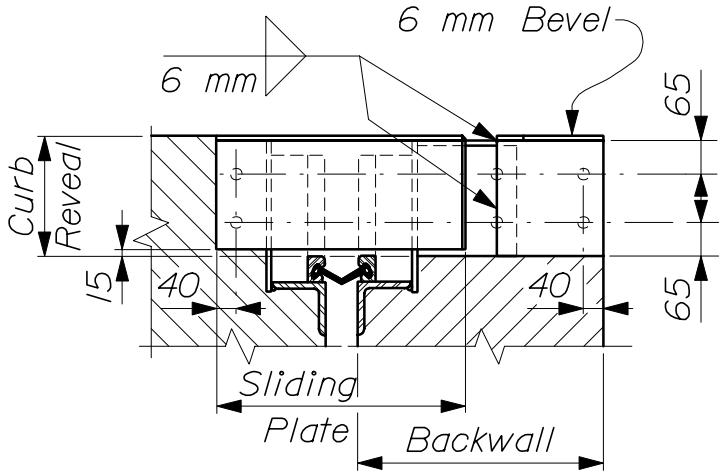

-- ELEVATION SIDEWALK / CURB EXPANSION DAM --

EXPANSION DEVICE - GLAND SEAL

520(05)

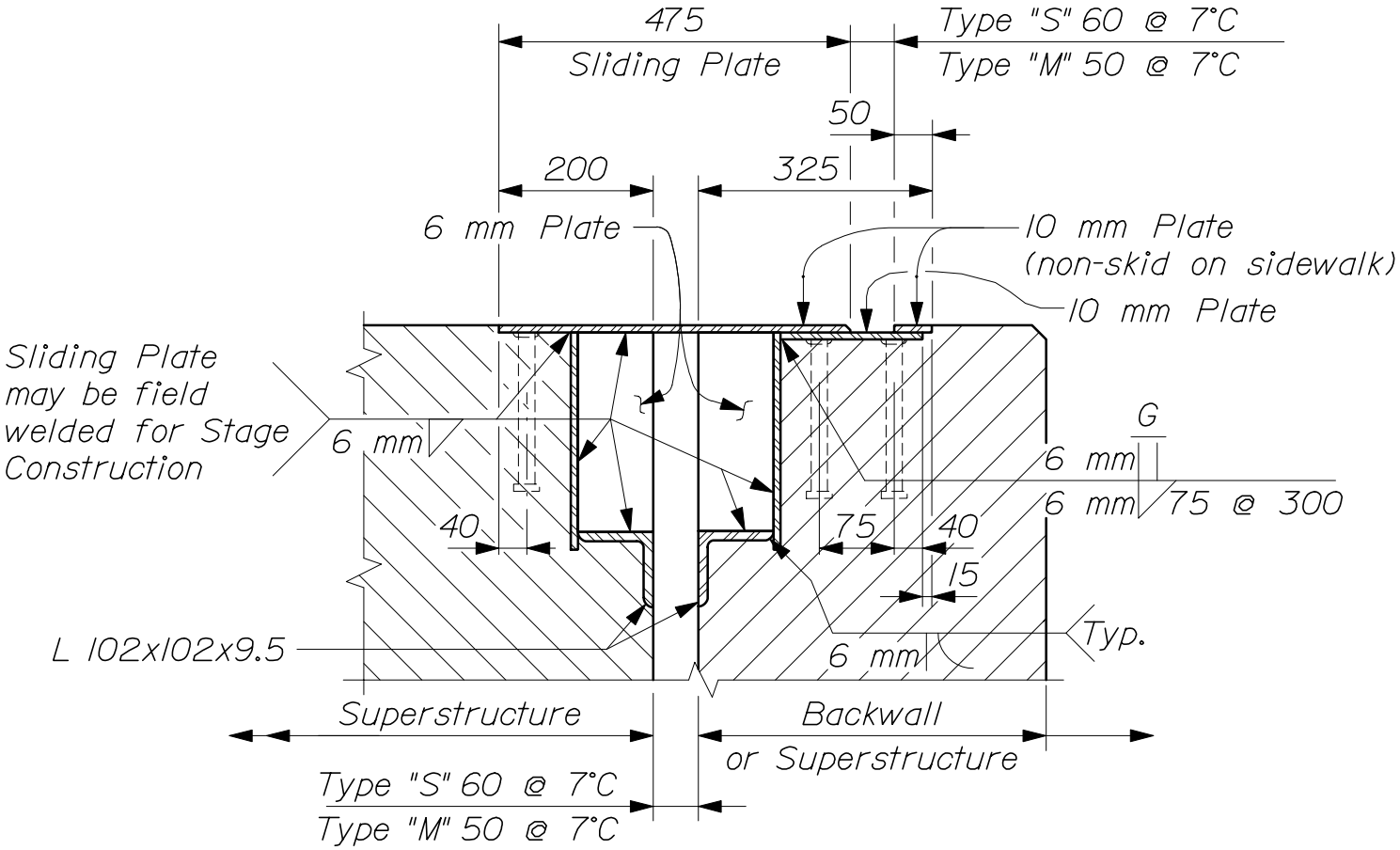

Section Y-Y / 520(05)

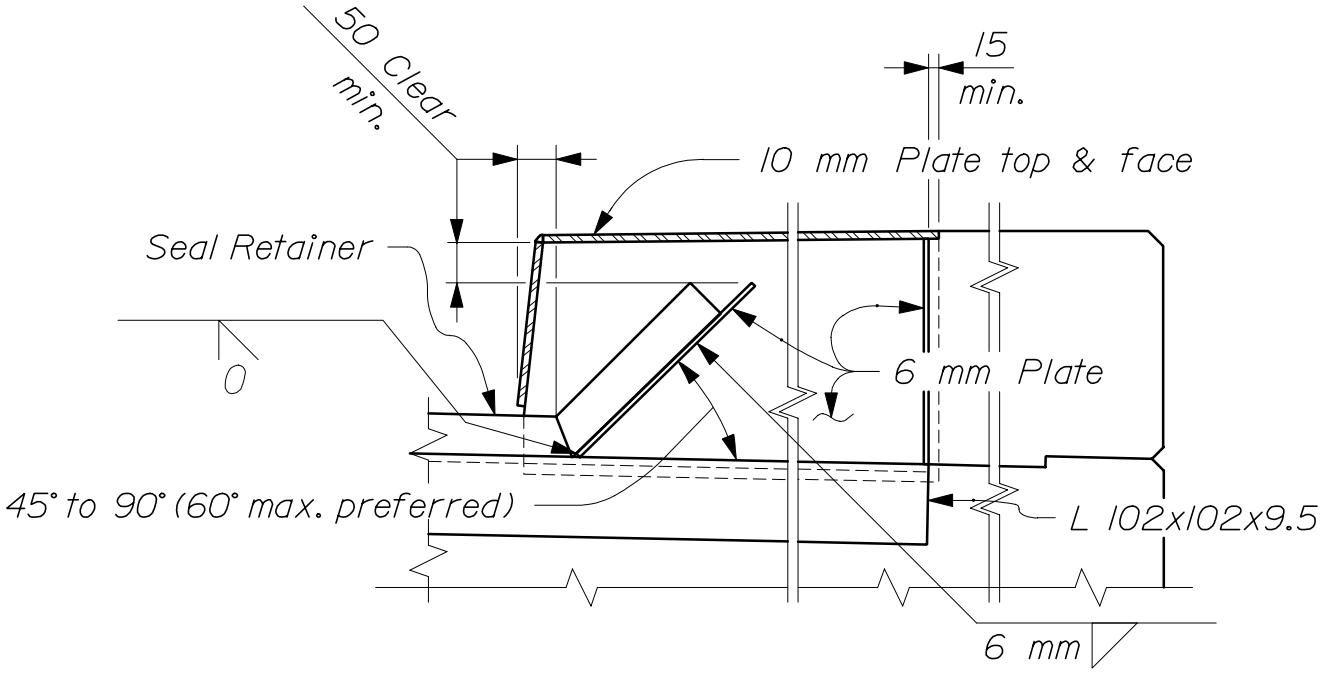

Section Z-Z / 520(05)

-- SIDEWALK / CURB EXPANSION DAM SECTIONS --

EXPANSION DEVICE - GLAND SEAL

520(06)

NOTES:

1. Each "Expansion Device - Gland Seal" consists of one backwall element and one superstructure element (or two superstructure elements over piers) with expansion dams as required.

2. Refer to Design Drawings for dimensions, slopes, skew and all other information necessary to fabricate and install each Expansion Device.

3. The Expansion Device shall be fabricated to be installed normal to grade.

4. The Expansion Device shall be set to an opening of 50 mm in the fabrication shop. The joint opening shall be adjusted for temperature in the field at the time of installation using the following formula:

0.012 x "L" x "T" = Adjustment (in mm)

"L" is the distance in meters between the backwall and the nearest fixed bearings (for joints at abutments) or between the fixed bearings at either side of the expansion joint (for joints at piers). "T" is the difference between the temperature of the structure and 7 °C.

A structure temperature above 7 °C will result in a smaller joint opening.

5. Welding to reinforcing steel will be allowed in the top of the abutment backwall above the block - out joint.

6. The slab and backwall concrete shall be in place before the Expansion Device is fixed in position. No allowance for movement due to dead load deflection is necessary.

7. The concrete in the block - out may be placed with the curb / sidewalk concrete. An approved epoxy bonding agent shall be applied to all vertical surfaces of the block - out before making the final concrete placement.

8. If there is a conflict between these Standard Details and the Design Drawings, the requirements of the Design Drawings shall be followed.

MATERIALS:

All shapes and plates----------AASHTO M 183M/M 183 (ASTM A 36/A 36M)

EXPANSION DEVICE - GLAND SEAL

520(07)

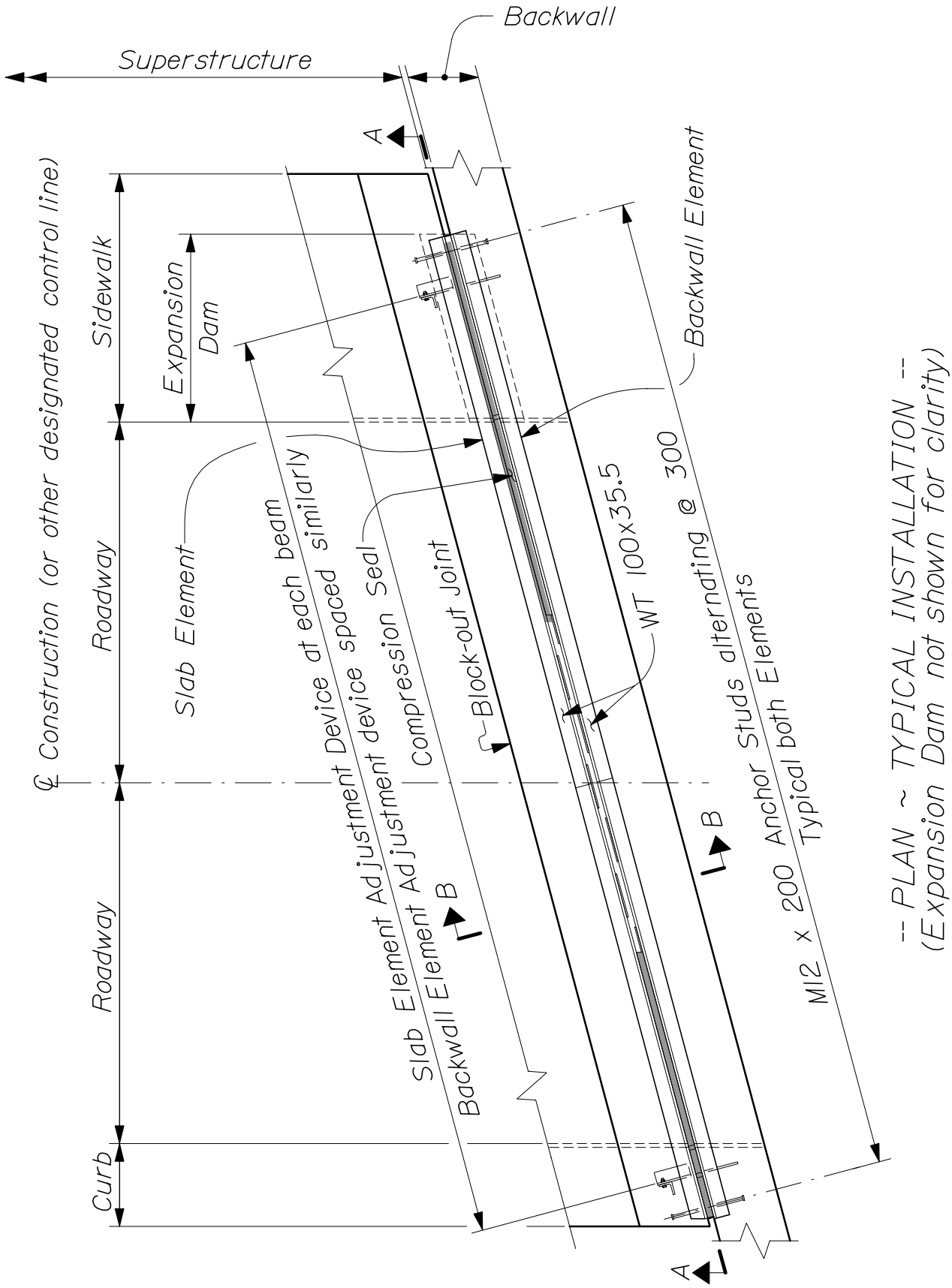

EXPANSION DEVICE - COMPRESSION SEAL

520(08)

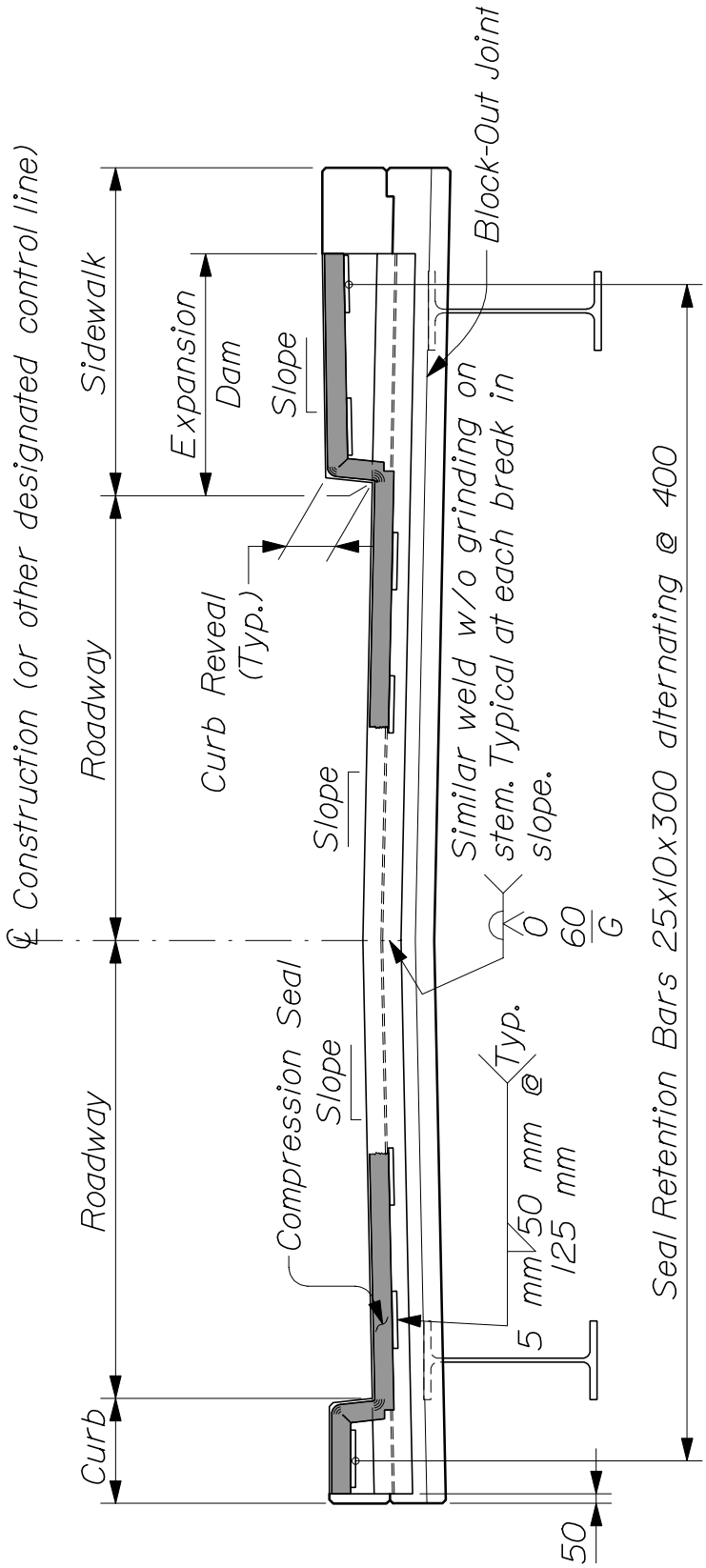

Section A-A / 520(08)

-- ELEVATION ~ TYPICAL INSTALLATION --

EXPANSION DEVICE - COMPRESSION SEAL

520(09)

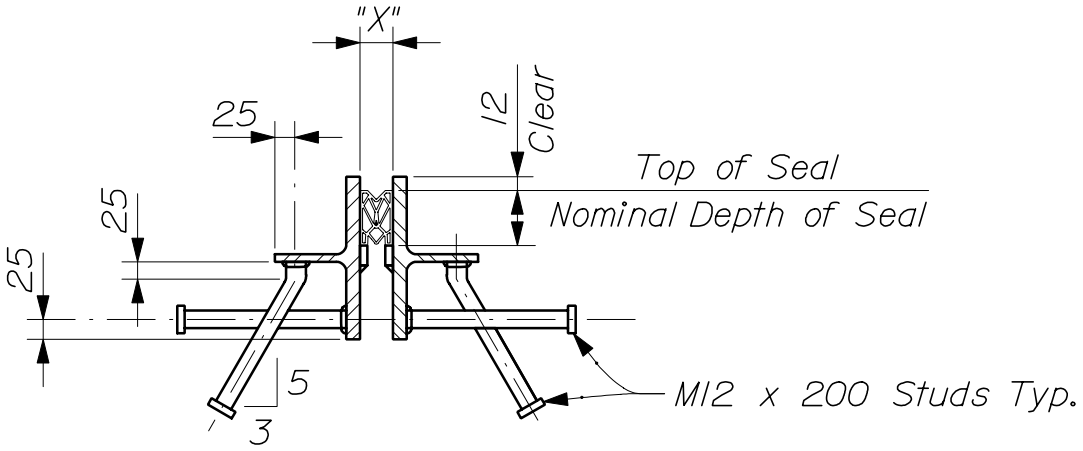

-- TYPICAL SECTION --

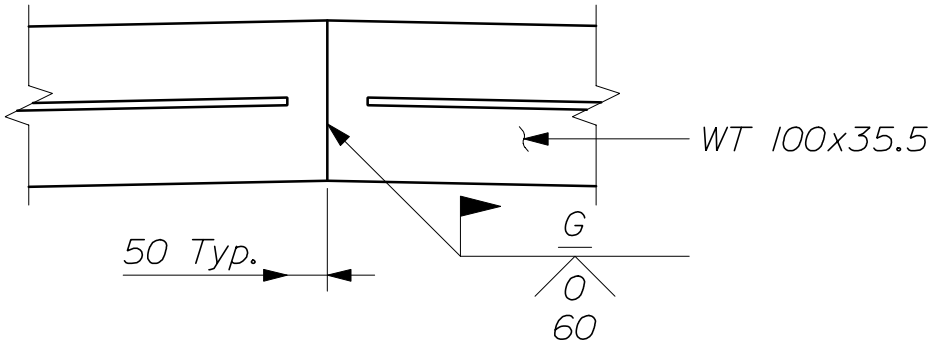

-- JOINT ARMOR FIELD SPLICE --
(for Stage Construction)

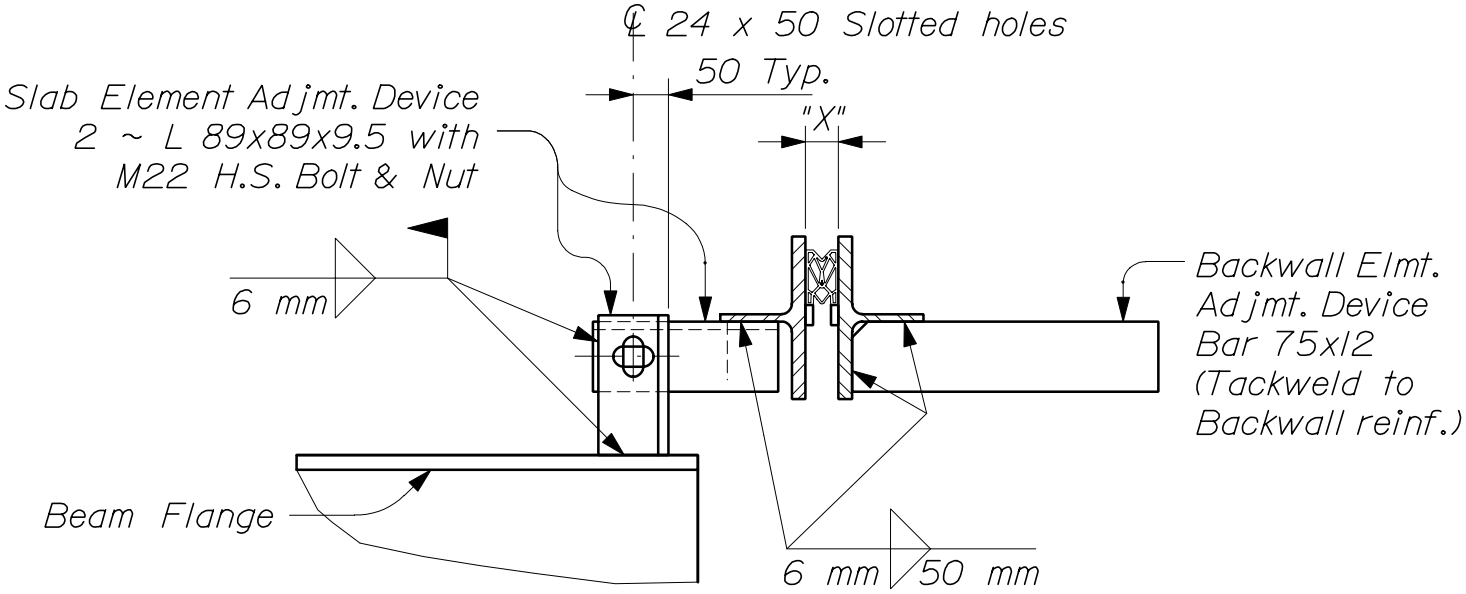

-- ADJUSTMENT DEVICE --

EXPANSION DEVICE - COMPRESSION SEAL

520(10)

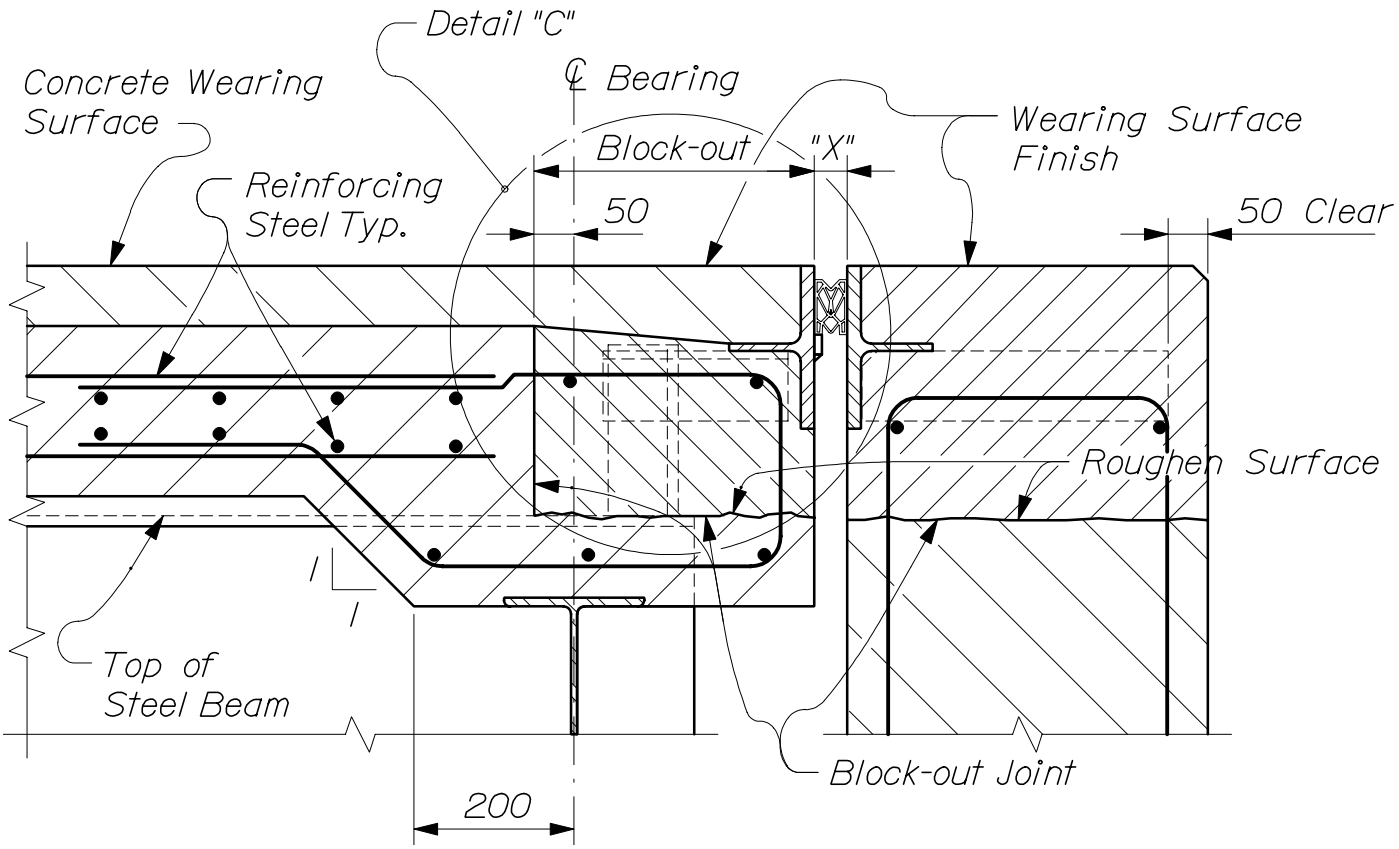

Section B-B / 520(08)
(Showing Concrete Wearing Surface)

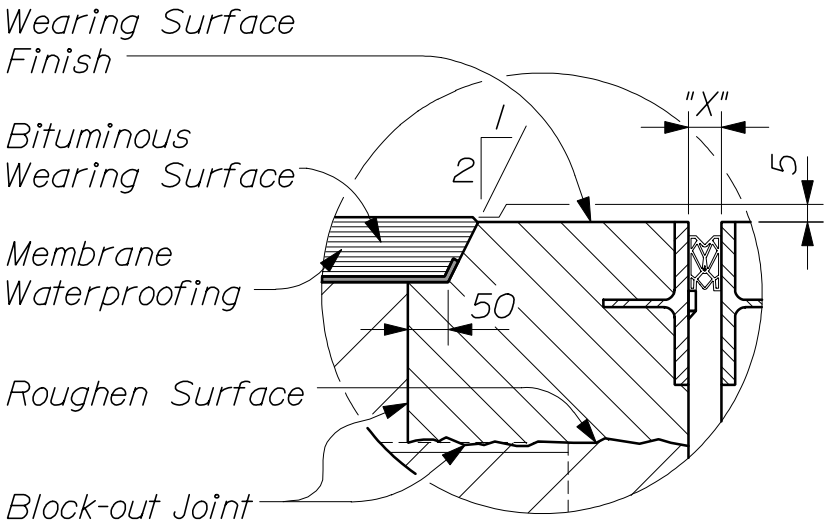

Detail "C"
(Showing Bituminous Wearing Surface)

-- CONCRETE BLOCK - OUT --

EXPANSION DEVICE - COMPRESSION SEAL

520(11)

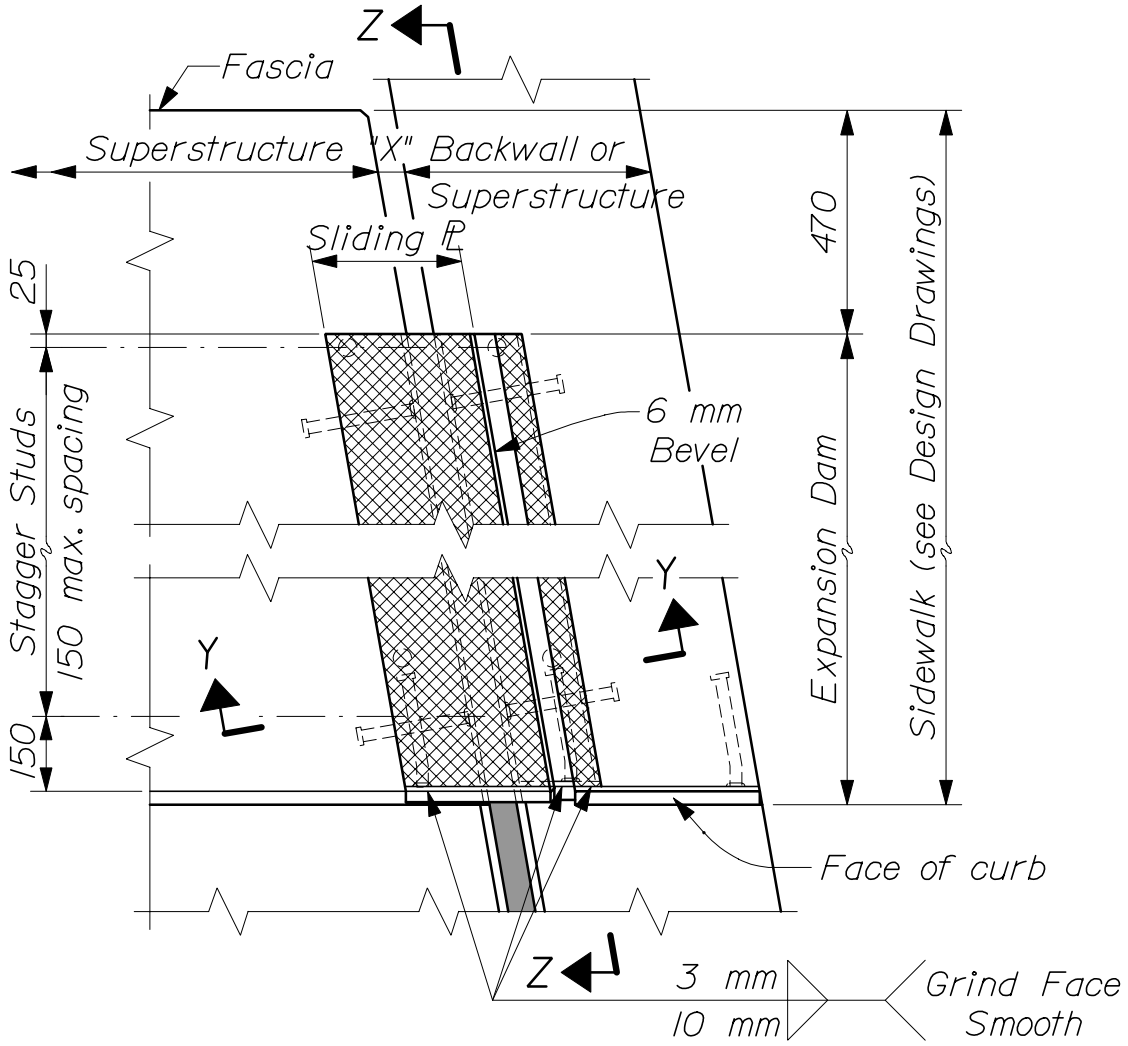

-- PLAN ~ SIDEWALK EXPANSION DAM --

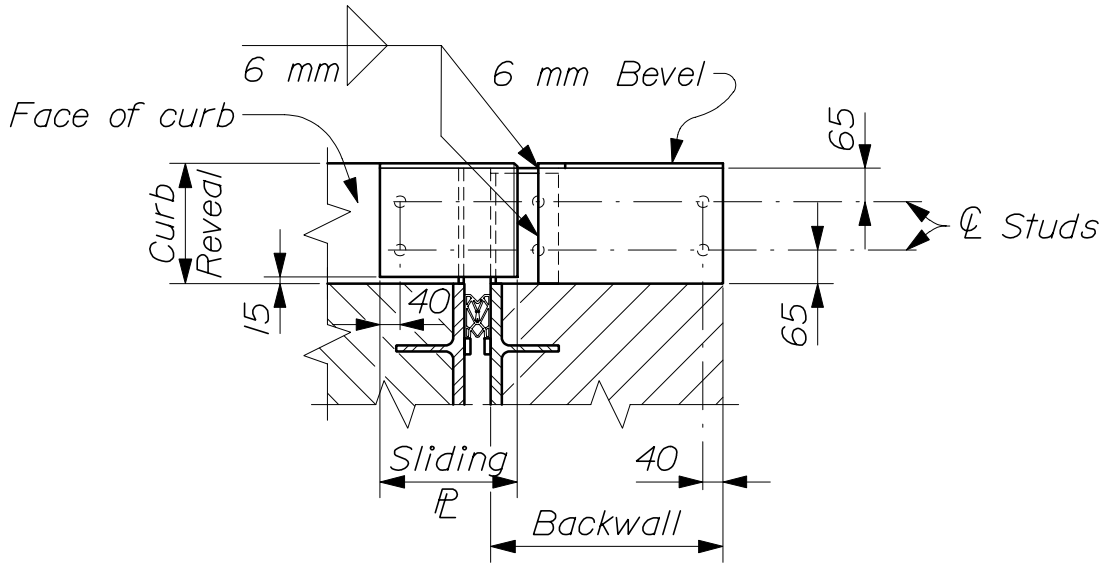

-- ELEVATION ~ SIDEWALK EXPANSION DAM --

EXPANSION DEVICE - COMPRESSION SEAL

520(12)

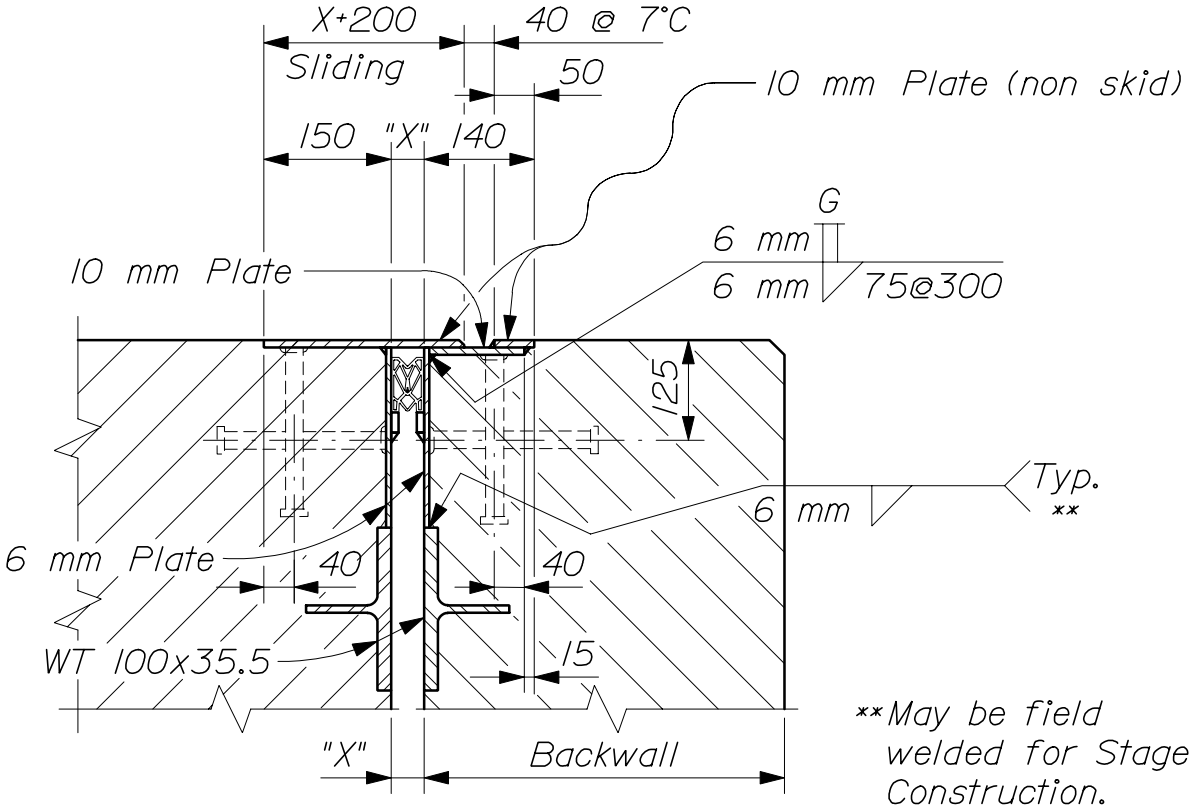

Section Y-Y / 520(12)

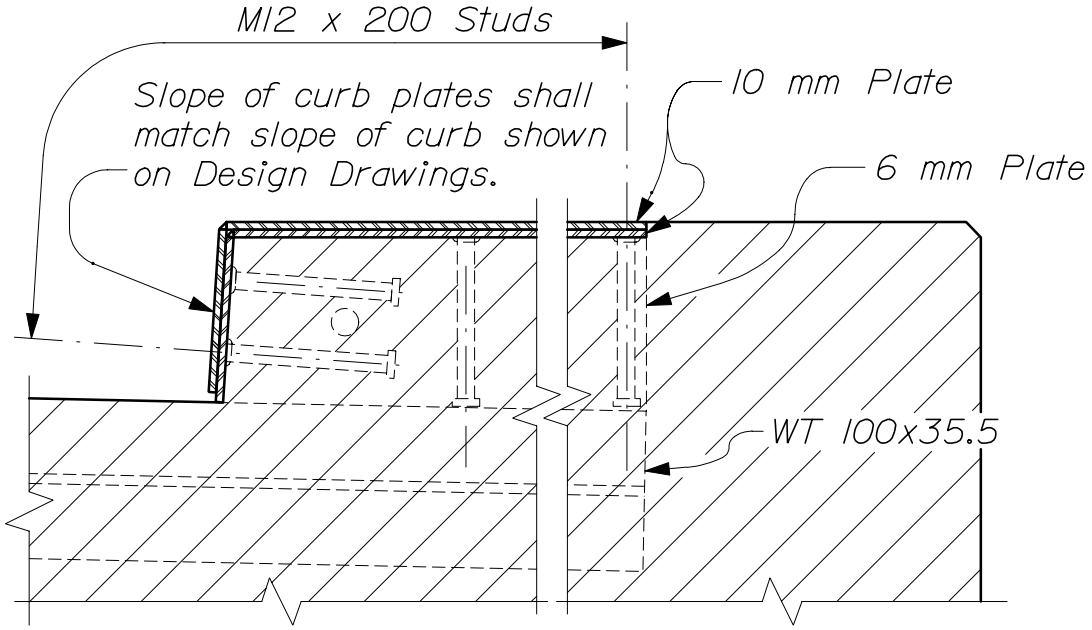

Section Z-Z / 520(12)

-- SIDEWALK EXPANSION DAM SECTIONS --

EXPANSION DEVICE - COMPRESSION SEAL

520(13)

NOTES:

1. Each "Expansion Device - Compression Seal" consists of one backwall element and one superstructure element (or two superstructure elements over piers) with expansion dams as required.

2. Refer to Design Drawings for dimensions, slopes, skew and all other information necessary to fabricate and install each Expansion Device.

3. The Expansion Device shall be fabricated to be installed normal to grade.

4. Dimension "X" at 7 °C shall be determined as follows:

(0.85 x nominal seal width) - 1/2 MR

The Movement Rating (MR) for each seal shall be as determined by MDOT for the make and type of seal to be provided. Dimension "X" at 7 °C and the make and type of seal shall be shown on the Shop Detail Drawings.

5. Final adjustment for temperature shall be made in the field according to the "Compression Seal Adjustment Chart" shown on the Design Drawings. The adjustment shall be measured parallel to the centerline of construction.

6. Welding to reinforcing steel will be allowed in the top of the abutment backwall above the block - out joint.

7. The slab and backwall concrete shall be in place before the Expansion Device is fixed in position. No allowance for movement due to dead load deflection is necessary.

8. The concrete in the block - out may be placed with the curb / sidewalk concrete. An approved epoxy bonding agent shall be applied to all vertical surfaces of the block - out before making the final concrete placement.

9. If there is a conflict between these Standard Details and the Design Drawings, the requirements of the Design Drawings shall be followed.

MATERIALS:

All shapes and plates----------AASHTO M 183M/M 183 (ASTM A 36/A 36M)

EXPANSION DEVICE - COMPRESSION SEAL

520(14)

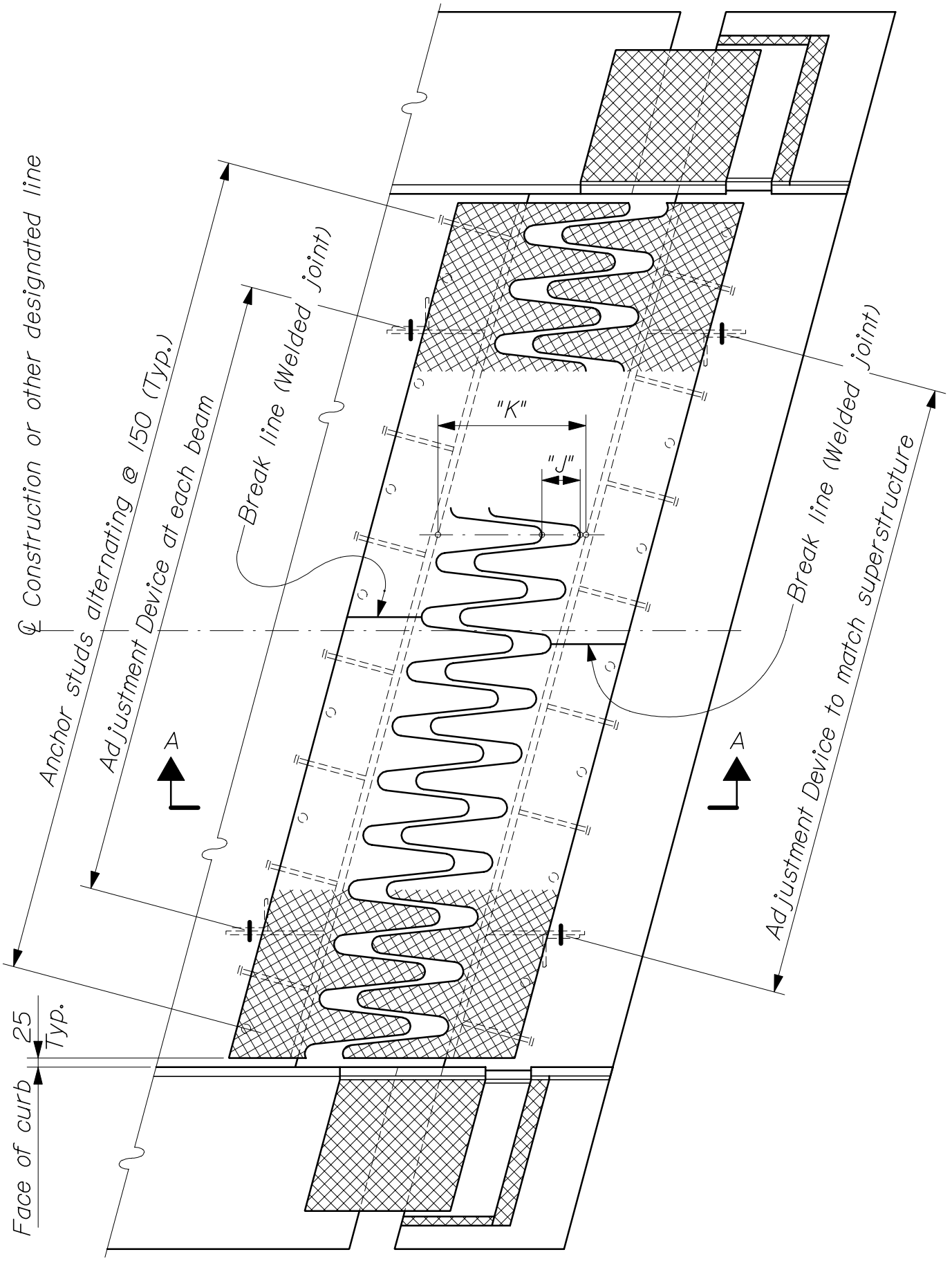

EXPANSION DEVICE - FINGER JOINT

521(01)

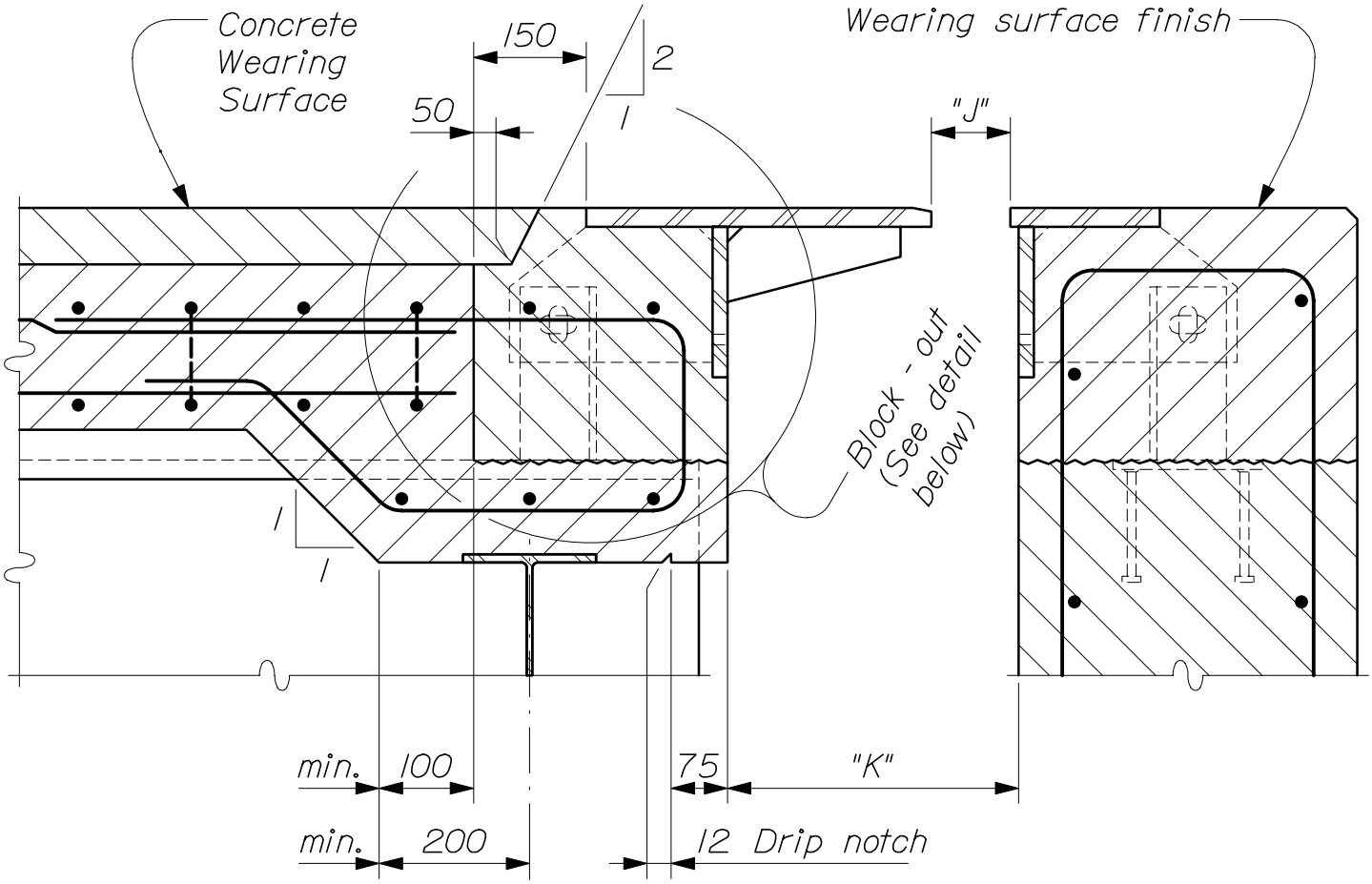

-- SECTION A-A --

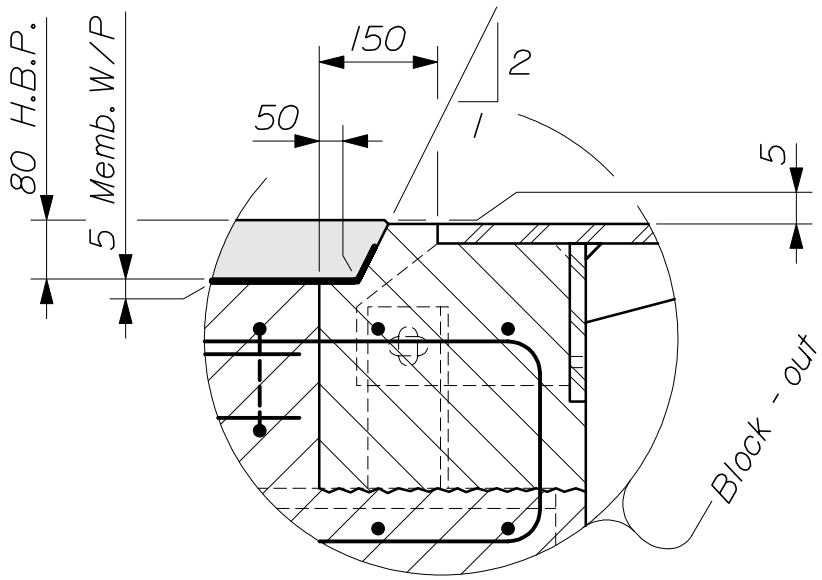

-- BITUMINOUS WEARING SURFACE DETAIL --

EXPANSION DEVICE - FINGER JOINT

521(02)

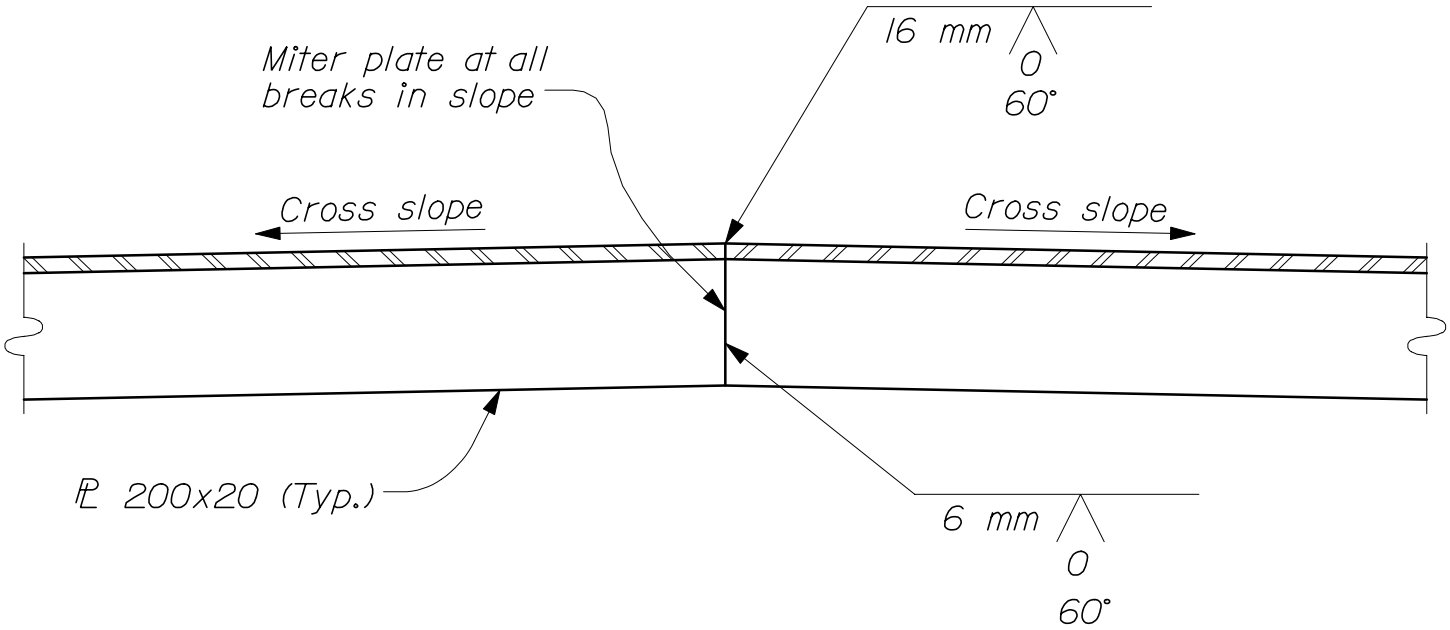

-- PART FINGER JOINT ELEVATION --

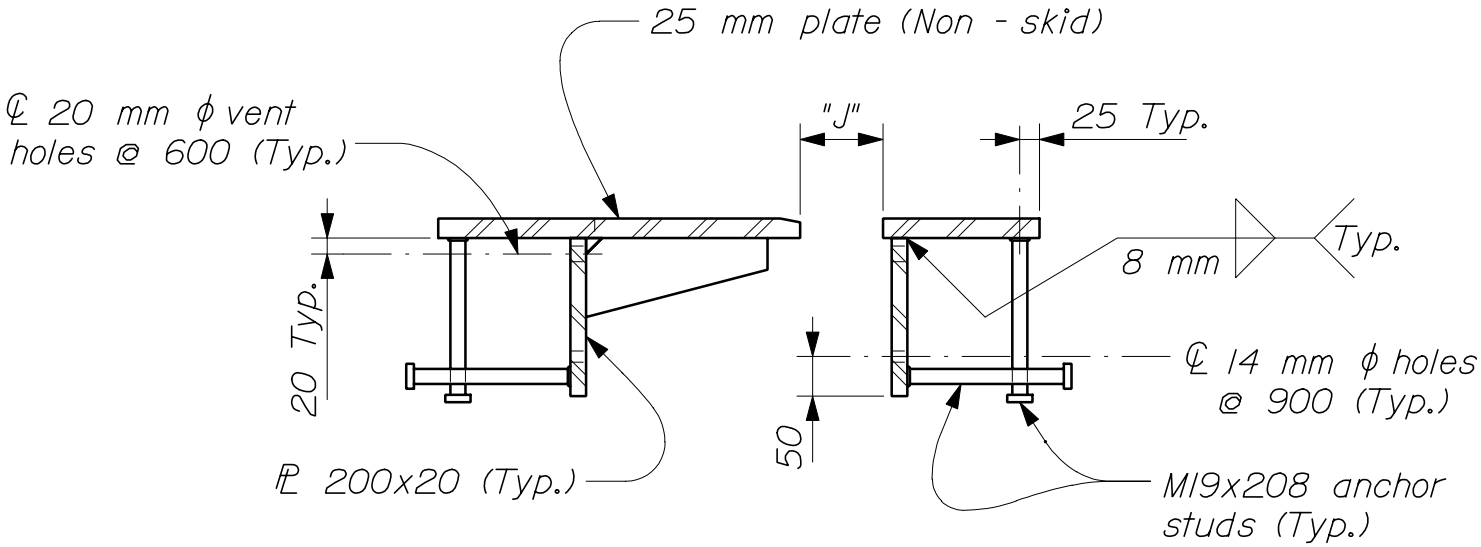

-- TYPICAL FINGER JOINT SECTION --

EXPANSION DEVICE - FINGER JOINT

521(03)

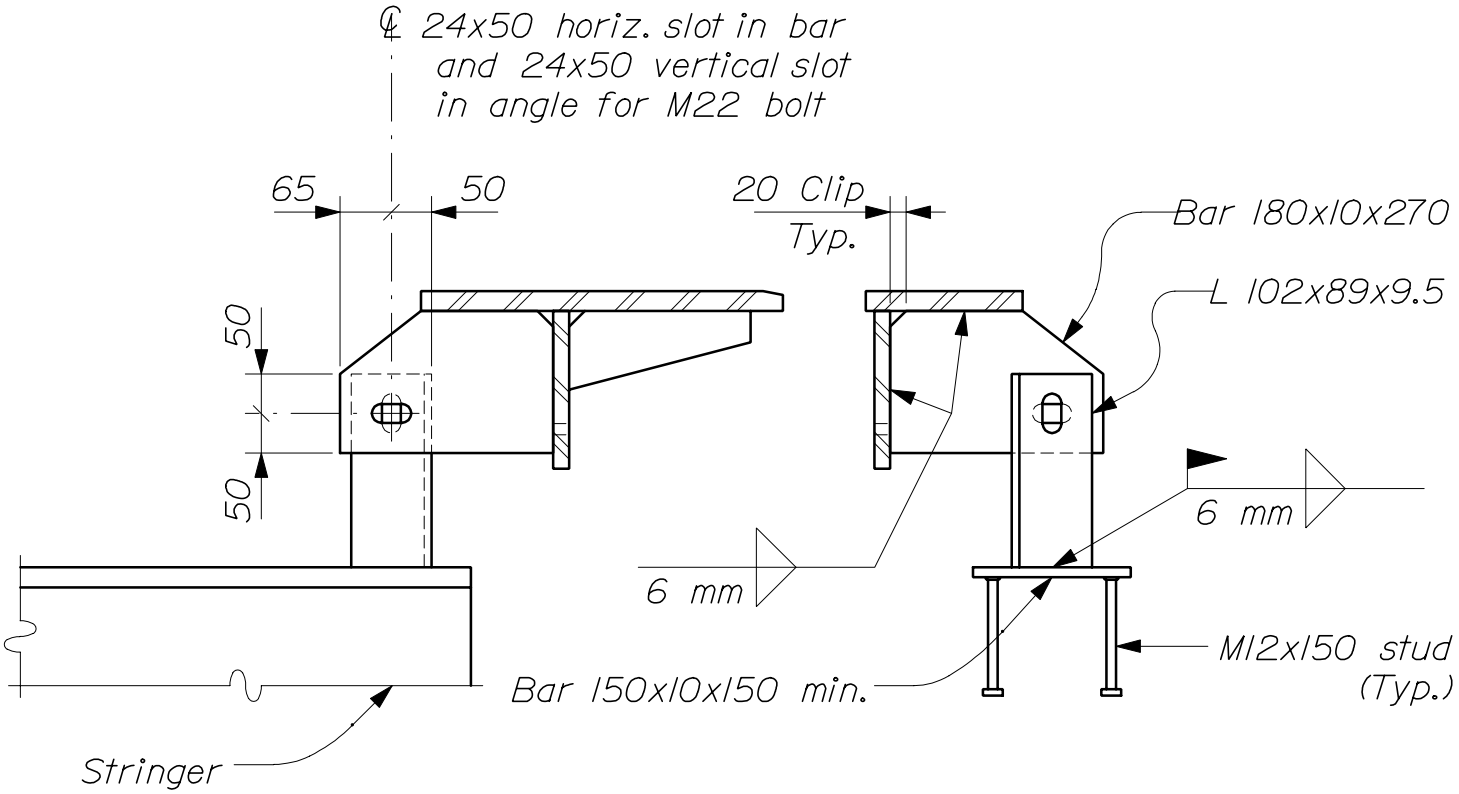

-- ADJUSTMENT DEVICES --
Symmetical both sides of joint except as shown

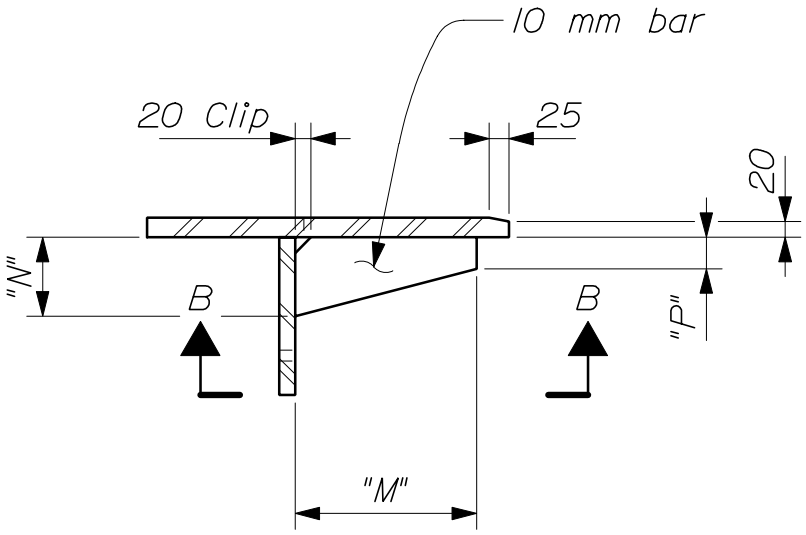

-- FINGER DETAIL --

EXPANSION DEVICE - FINGER JOINT

521(04)

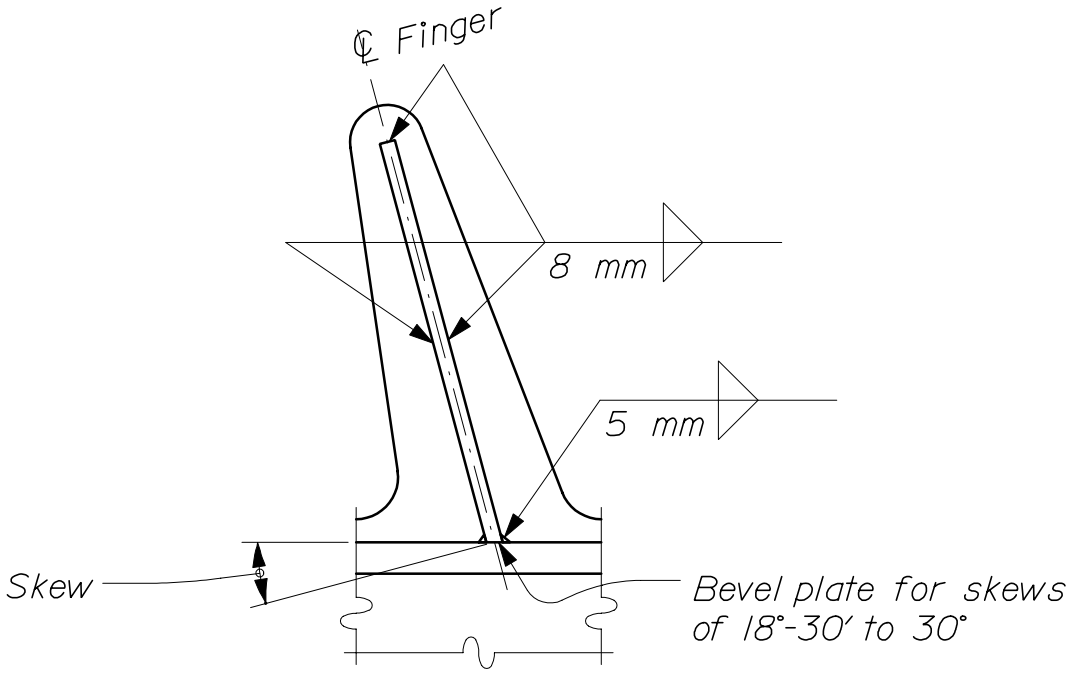

-- VIEW B-B --
Skew 0° to 30°

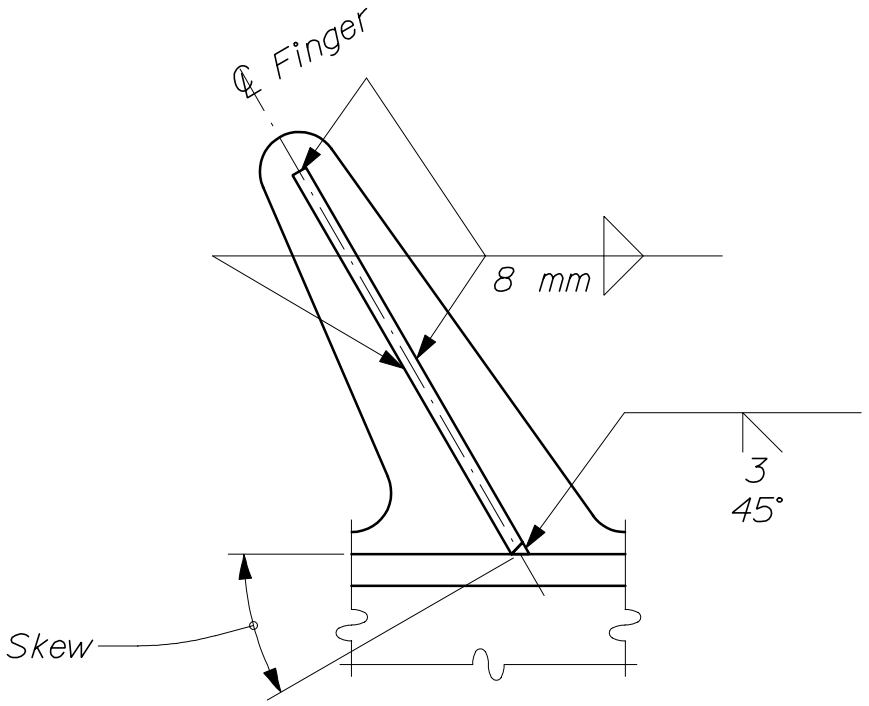

-- VIEW B-B --
Skew over 30°

EXPANSION DEVICE - FINGER JOINT

521(05)

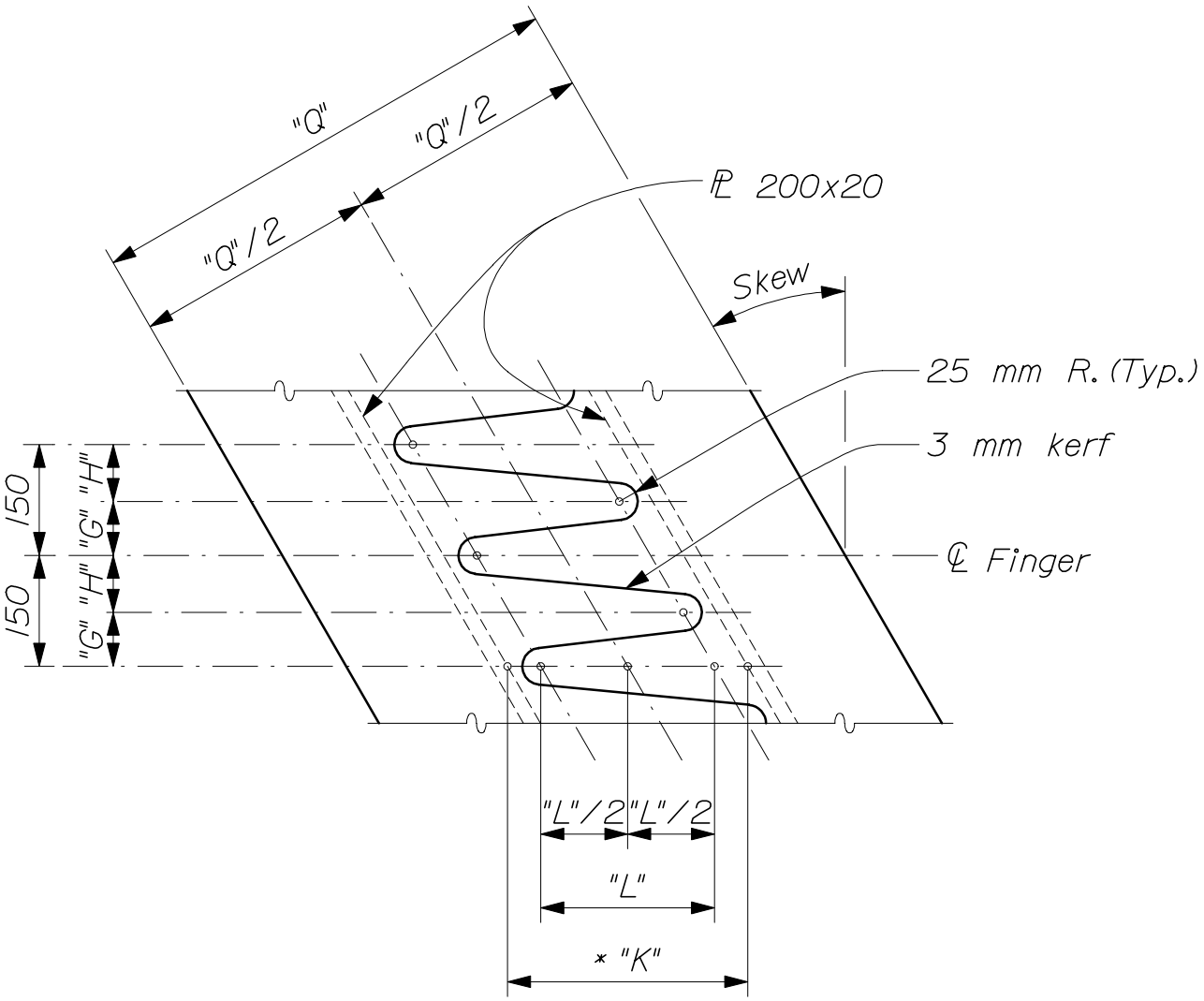

-- FINGER CUTTING DETAIL --
(Skew back on left)

Note; Cut from one plate and match mark
* "K" is "K" dimension prior to cutting plate

EXPANSION DEVICE - FINGER JOINT

521(06)

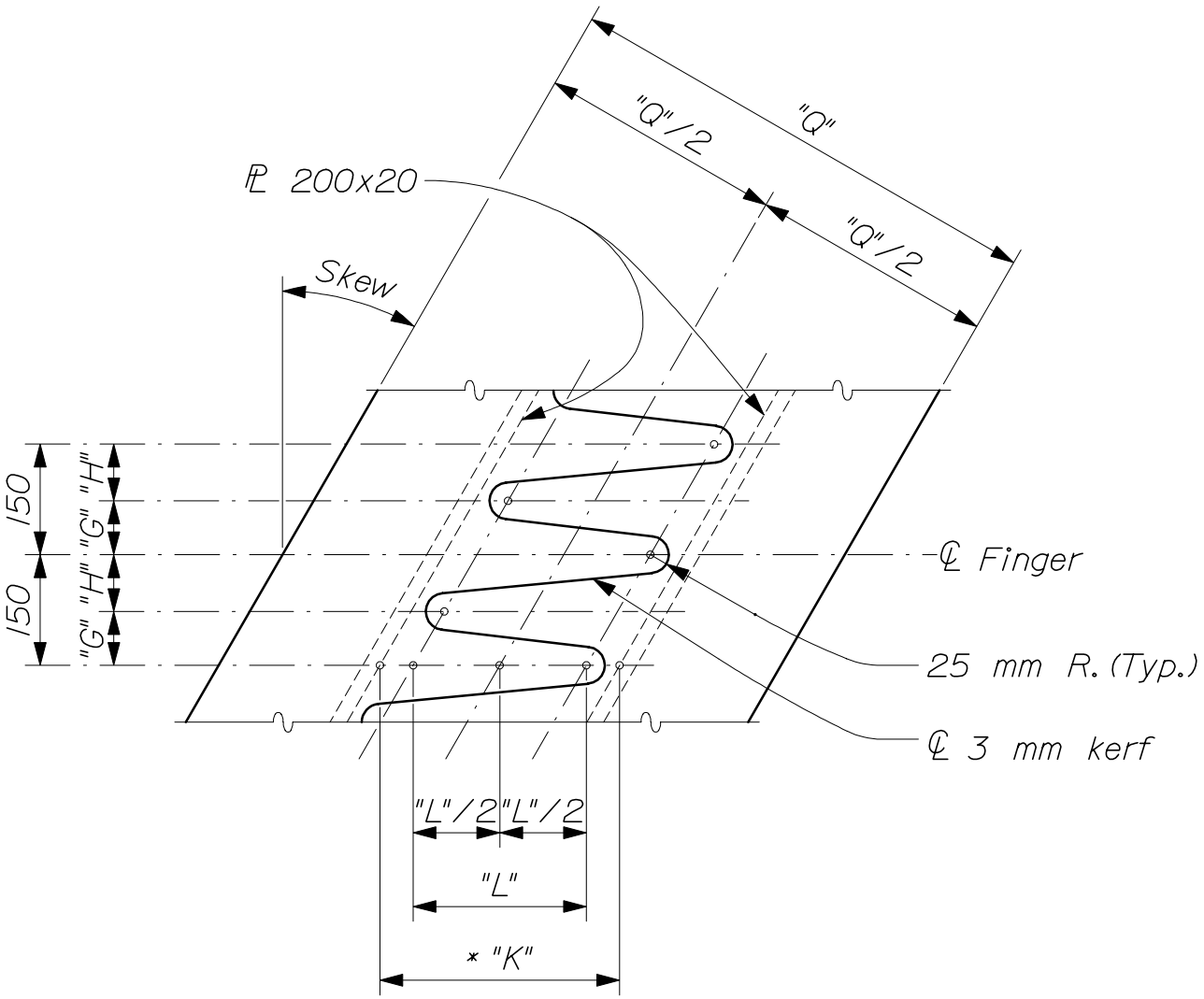

-- FINGER CUTTING DETAIL --
(Skew ahead on left)

Note; Cut from one plate and match mark
* "K" is "K" dimension prior to cutting plate

EXPANSION DEVICE - FINGER JOINT

521(07)

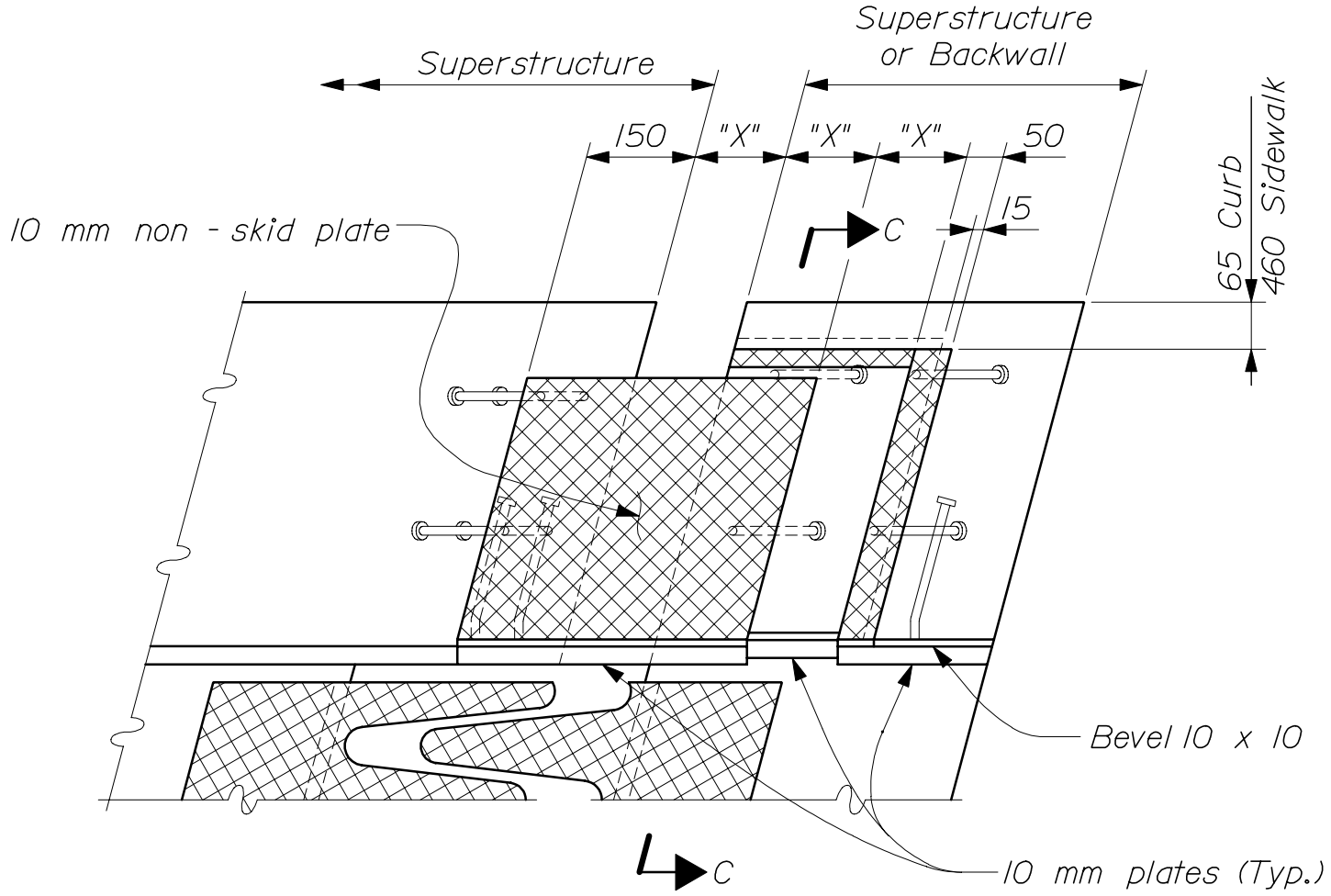

-- EXPANSION DAM PLAN --

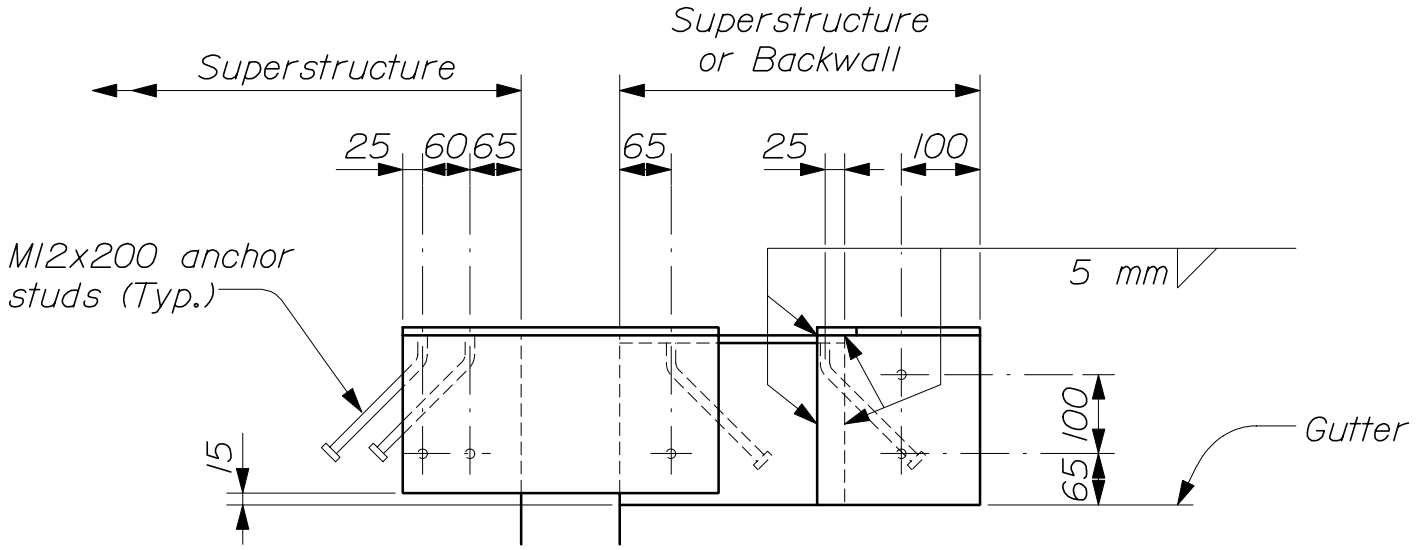

-- EXPANSION DAM ELEVATION --

EXPANSION DEVICE - FINGER JOINT

521(08)

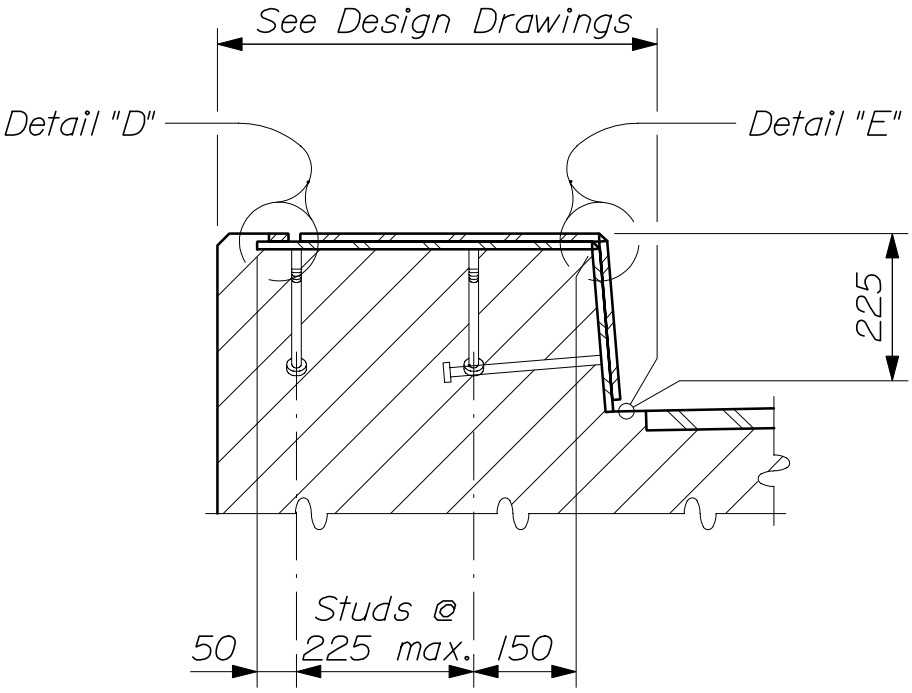

-- SECTION C-C --

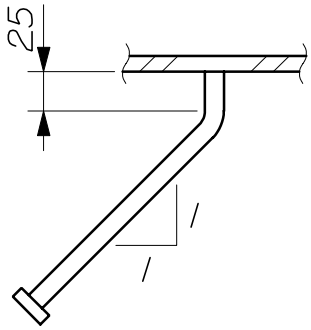

-- BENT STUD DETAIL --

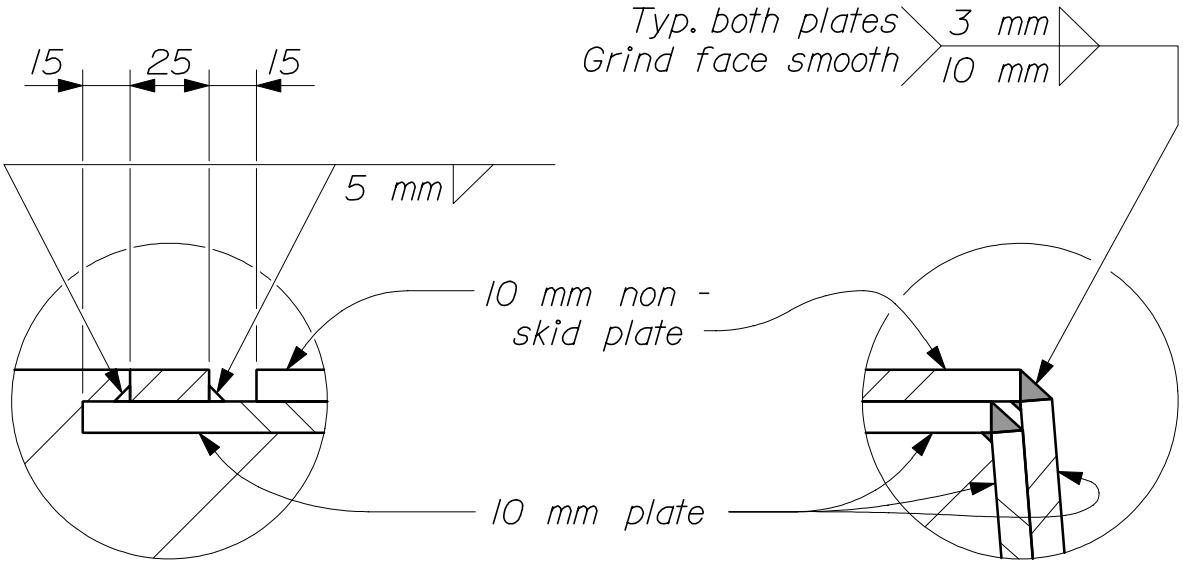

-- DETAIL "D" --

-- DETAIL "E" --

EXPANSION DEVICE - FINGER JOINT

521(09)

EXPANSION DEVICE - FINGER JOINT

52(10)

TABLE OF DIMENSIONS

Type	Exp. Length	Skew	* "K"	"L"	"G"	"H"	"K"@7°	"J"@7°	"M"	"N"	"P"	"Q"	"X"@7°
A	30 000 to 85 000	0° to 5°	180	100	75	75	232	55	--	--	--	530	75
		> 5° to 10°	185	110	73	77	237	55	--	--	--	560	75
		> 10° to 20°	205	120	71	79	257	55	--	--	--	560	75
		> 20° to 30°	225	135	69	81	277	55	--	--	--	580	75
		> 30° to 40°	250	150	67	83	302	55	--	--	--	580	75
		> 40° to 50°	285	165	65	85	337	55	--	--	--	580	75
B	85 000 to 130 000	0° to 5°	230	150	75	75	307	80	--	--	--	580	100
		> 5° to 10°	235	160	73	77	312	80	--	--	--	610	100
		> 10° to 20°	255	170	71	79	332	80	--	--	--	610	100
		> 20° to 30°	275	185	69	81	352	80	--	--	--	640	100
		> 30° to 40°	305	205	67	83	382	80	--	--	--	640	100
		> 40° to 50°	345	225	65	85	422	80	--	--	--	640	100
C	130 000 to 180 000	0° to 10°	285	210	75	75	387	105	230	100	40	660	125
		> 10° to 20°	305	220	74	76	407	105	250	100	40	660	125
		> 20° to 30°	325	235	73	77	427	105	280	100	40	660	125
		> 30° to 40°	355	255	72	78	457	105	280	100	40	660	125
		> 40° to 50°	395	275	70	80	497	105	300	100	40	660	125
D	180 000 to 230 000	0° to 10°	335	260	75	75	462	130	280	125	50	760	150
		> 10° to 20°	355	270	74	76	482	130	300	125	50	760	150
		> 20° to 30°	375	285	73	77	502	130	330	125	50	760	150
		> 30° to 40°	405	305	72	78	532	130	330	125	50	760	150
		> 40° to 50°	450	330	70	80	577	130	380	125	50	760	150
E	230 000 to 280 000	0° to 10°	385	310	75	75	537	155	330	150	65	910	175
		> 10° to 20°	405	320	74	76	557	155	360	150	65	910	175
		> 20° to 30°	425	335	73	77	577	155	380	150	65	910	175
		> 30° to 40°	455	355	72	78	607	155	380	150	65	910	175
		> 40° to 50°	500	380	70	80	652	155	430	150	65	910	175

NOTES:

1. Each "Expansion Device - Finger Joint" consists of one backwall element and one superstructure element (or two superstructure elements over piers) with expansion dams as required.

2. Refer to Design Drawings for dimensions, slopes, skew and all other information necessary to fabricate and install each Expansion Device.

3. The Expansion Device shall be fabricated to be installed normal to grade.

4. The Expansion Device shall be installed with a joint opening of "J" at 7 °C. The joint opening shall be adjusted for temperature in the field at the time of installation using the following formula:

0.012 x "L" x "T" = Adjustment (in mm)

"L" is the distance in meters between the backwall and the nearest fixed bearings (for joints at abutments) or between the fixed bearings at either side of the expansion joint (for joints at piers). "T" is the difference between the temperature of the structure and 7 °C.

A structure temperature above 7 °C will result in a smaller joint opening.

5. Welding to reinforcing steel will be allowed in the top of the abutment backwall above the block - out joint.

6. After the Expansion Device is in final position, weld the bar and angle of the adjustment devices together with a 6 mm fillet weld.

7. The slab and backwall concrete shall be in place before the Expansion Device is fixed in position. No allowance for movement due to dead load deflection is necessary.

8. The concrete in the block - out may be placed with the curb / sidewalk concrete. An approved epoxy bonding agent shall be applied to all vertical surfaces of the block - out before making the final concrete placement.

9. If there is a conflict between these Standard Details and the Design Drawings, the requirements of the Design Drawings shall be followed.

MATERIALS:

All shapes and plates----------AASHTO M 183M/M 183 (ASTM A 36/A 36M)

EXPANSION DEVICE - FINGER JOINT

521(11)

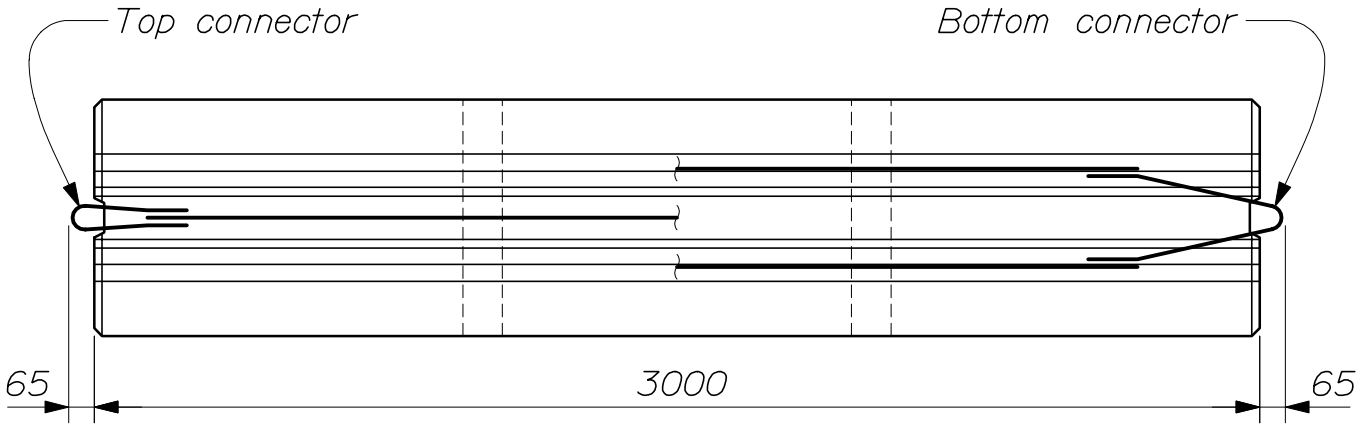

-- PLAN --

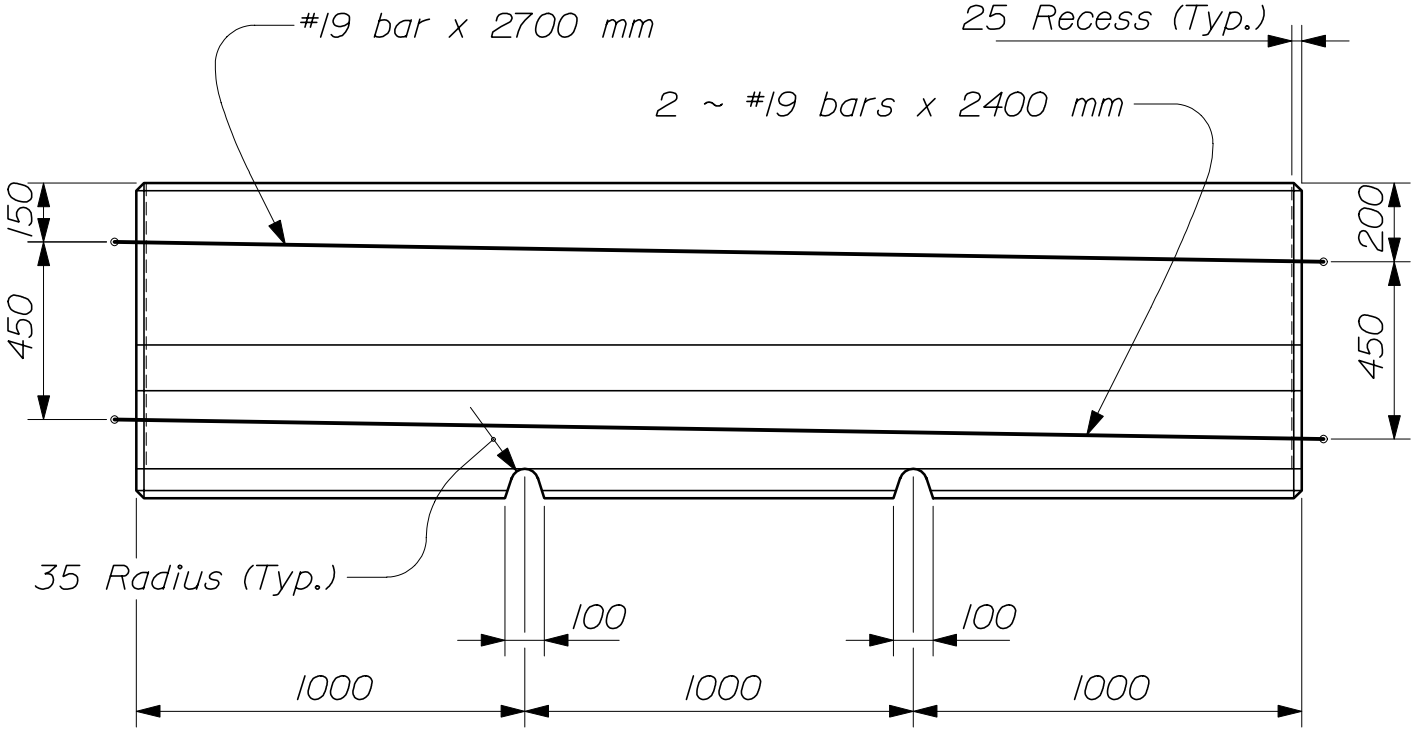

-- ELEVATION --

TEMPORARY CONCRETE BARRIER

526(01)

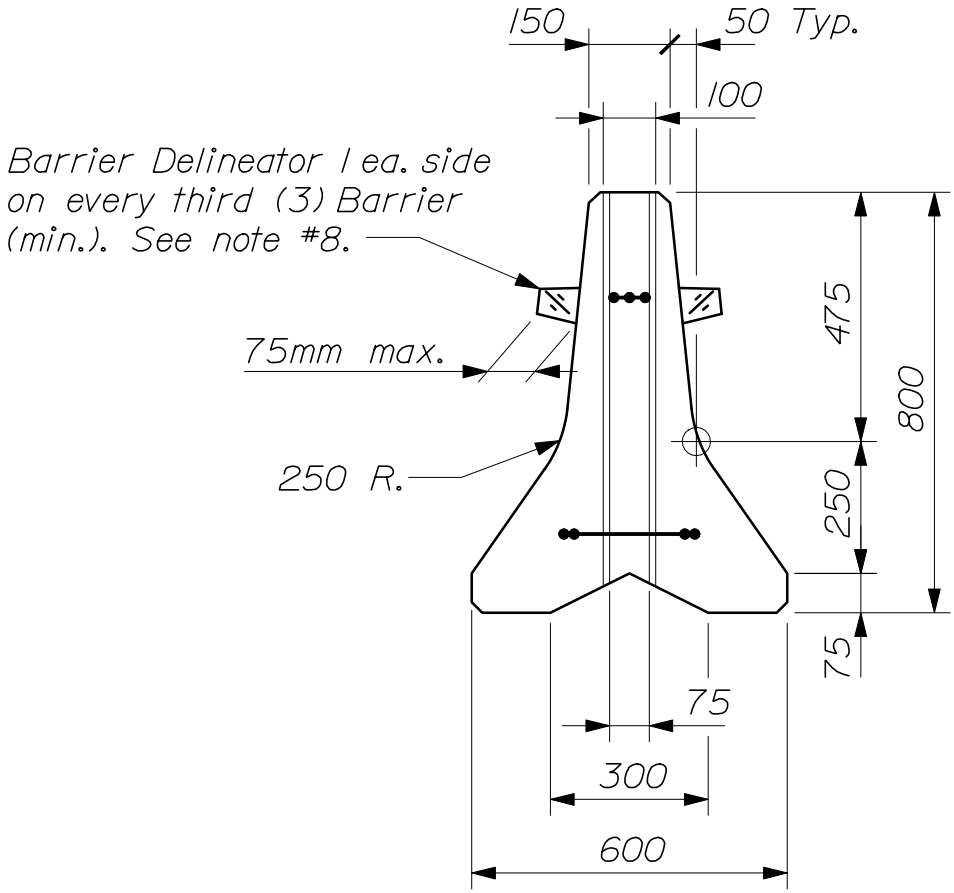

-- END VIEW --

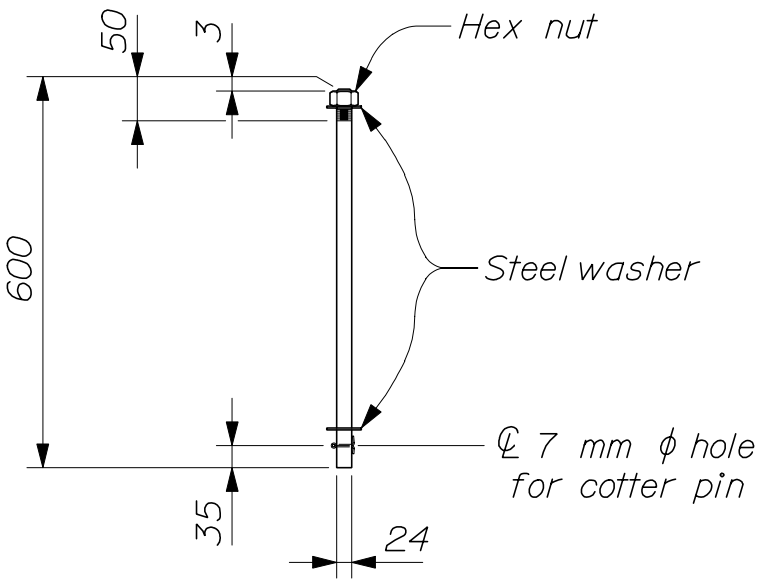

-- CONNECTING PIN --

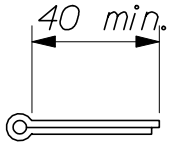

-- COTTER PIN DETAIL --
4.76 mm SAE Standard

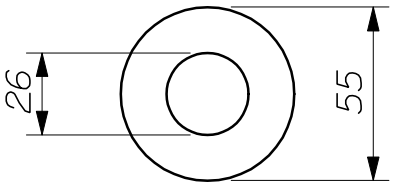

-- WASHER DETAIL --
4 mm thick galvanized steel

# TEMPORARY CONCRETE BARRIER
526(02)

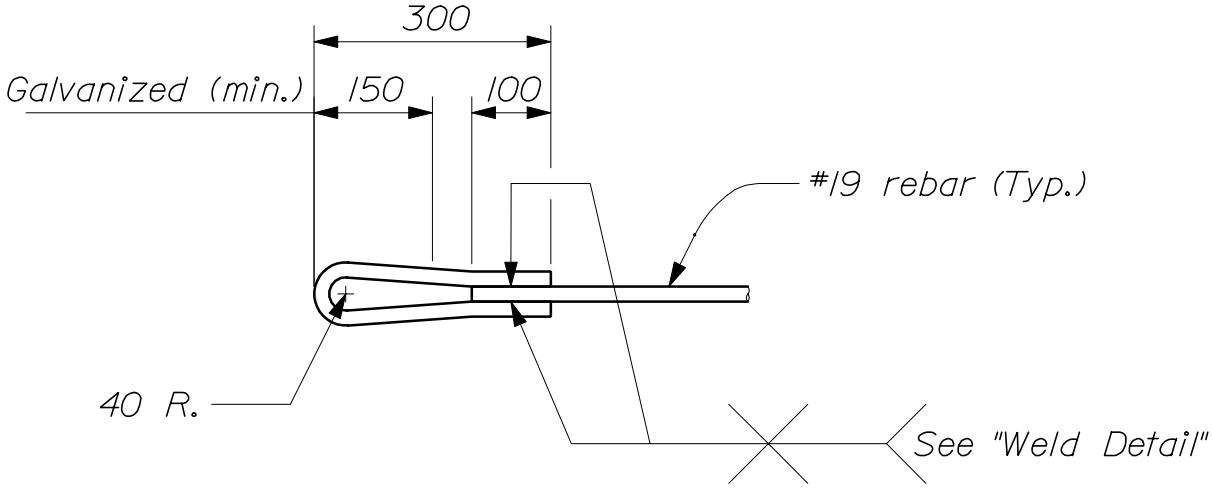

-- TOP CONNECTOR --

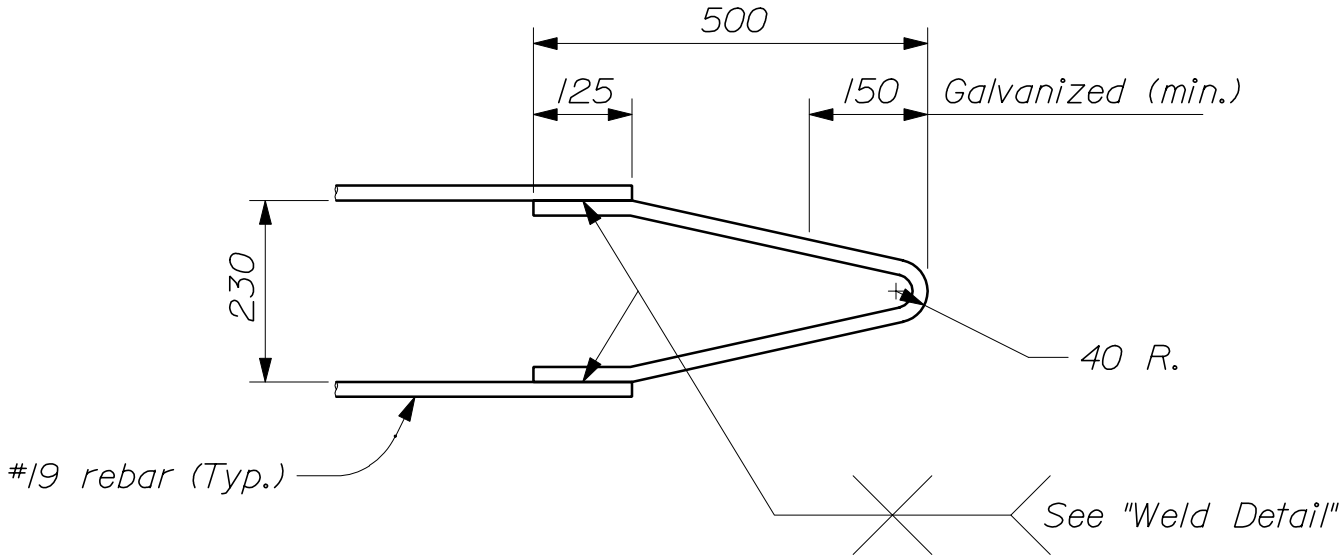

-- BOTTOM CONNECTOR --

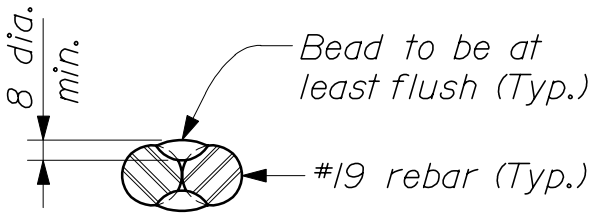

-- WELD DETAIL --

TEMPORARY CONCRETE BARRIER

526(03)

NOTES:

1. Alternate barrier designs may be submitted for approval by the Engineer.

2. Form a 20 mm chamfer or radius on all exposed edges.

3. Hardware shall be furnished in the metric sizes shown, except that equivalent imperial sizes may be substituted if metric sizes are not available.

4. Galvanize connectors after forming. Connectors may be completely galvanized.

5. Galvanize the connector pin assembly after fabrication. Burr the threads on the pin after installing the nut.

6. The reinforcement shown is primarily for the impact performance of the barrier. Additional reinforcement may be advisable for handling the barrier and for ensuring its integrity over its service life.

7. When serving the additional function of channelizing traffic, the barrier shall be supplemented by standard delineators, channelizing devices or pavement markings.

8. Barrier Deliniators shall be Bi-Directional with a minimum effective reflective area of 8.0 square inches as approved by the Resident. The reflector shall preferably be of Methyl Methacrylate, and the housing of Acrylonitaile Butadiene Styrene. As an alternative reflectors may be mounted on the top of the barrier.

TEMPORARY CONCRETE BARRIER

526(04)

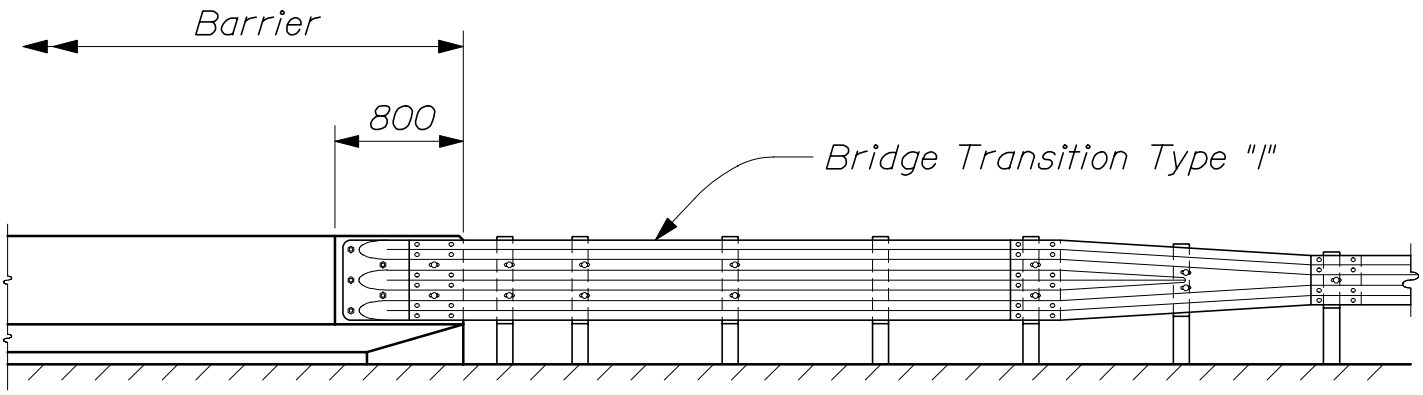

-- PERMANENT CONCRETE BARRIER TYPE IIIA --

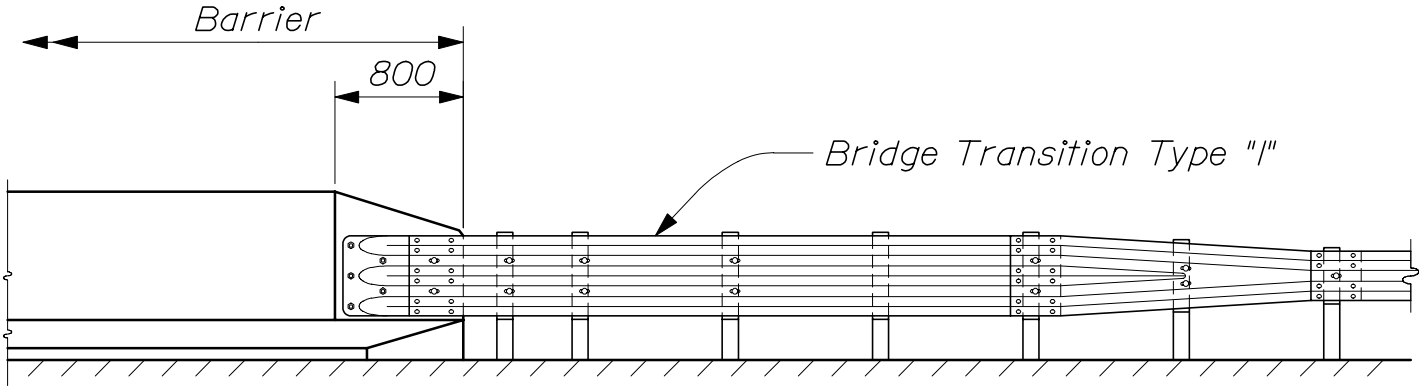

-- PERMANENT CONCRETE BARRIER TYPE IIIB --

PERMANENT CONCRETE BARRIER

526(05)

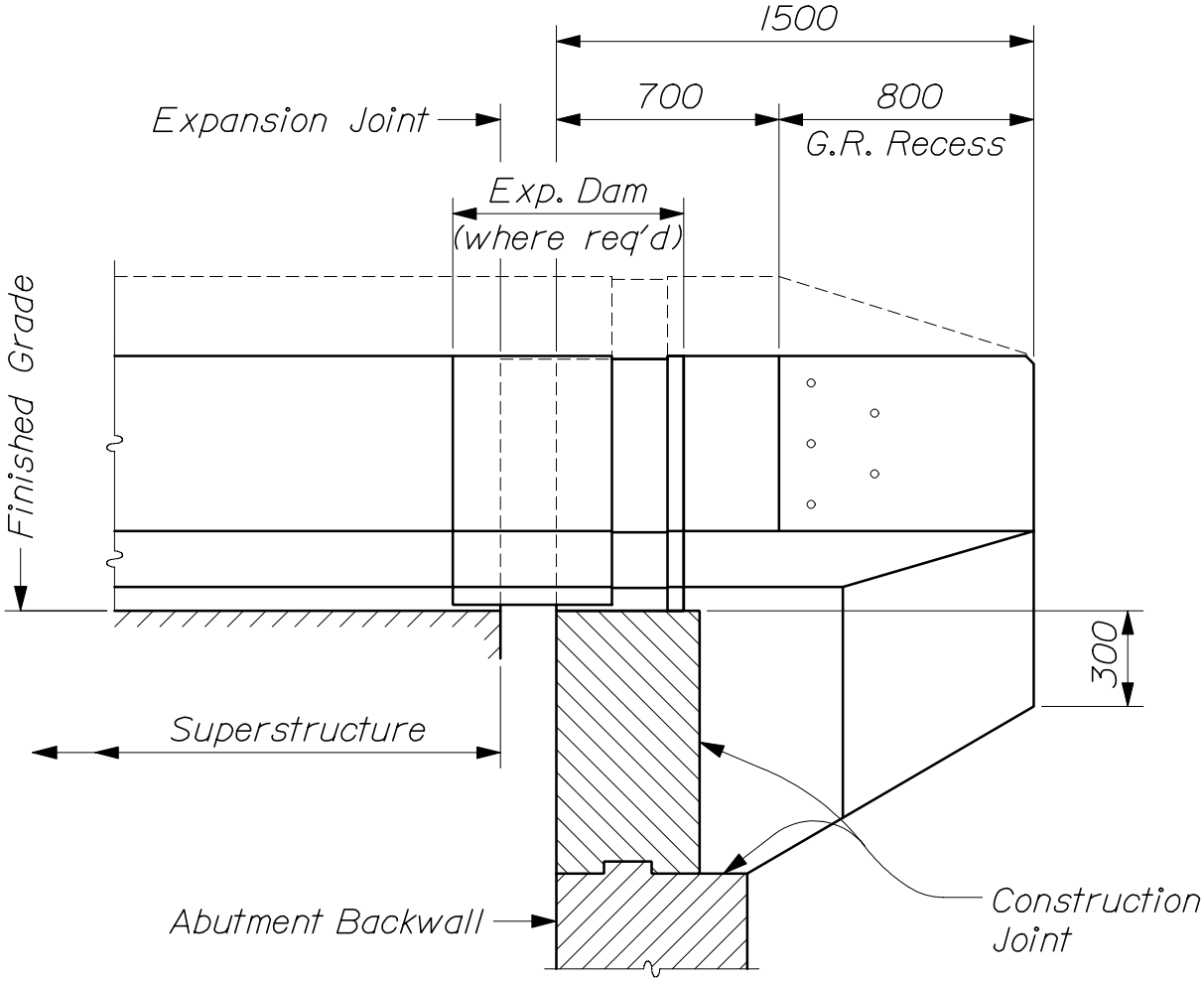

-- CANTILEVERED END AT EXPANSION JOINT --

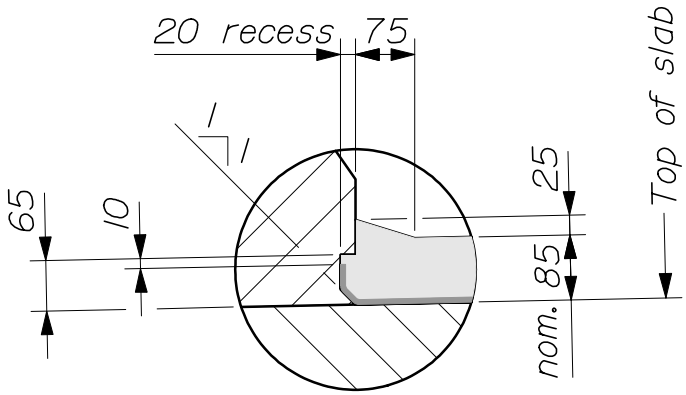

-- DETAIL AT GUTTER --
(showing membrane recess for bituminous wearing surface)

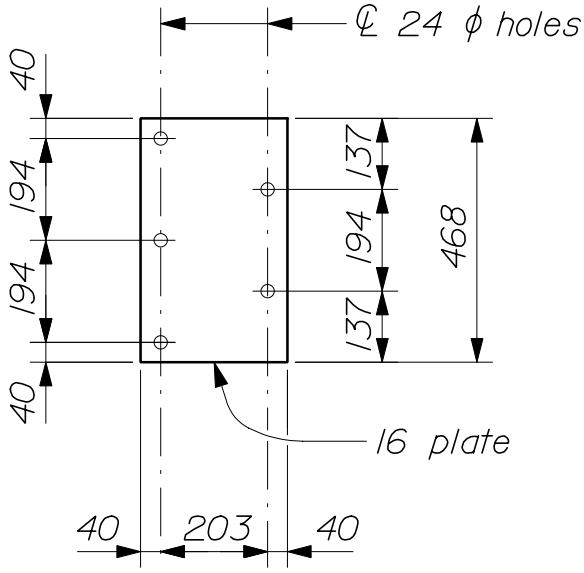

-- BEARING PLATE --

PERMANENT CONCRETE BARRIER

526(06)

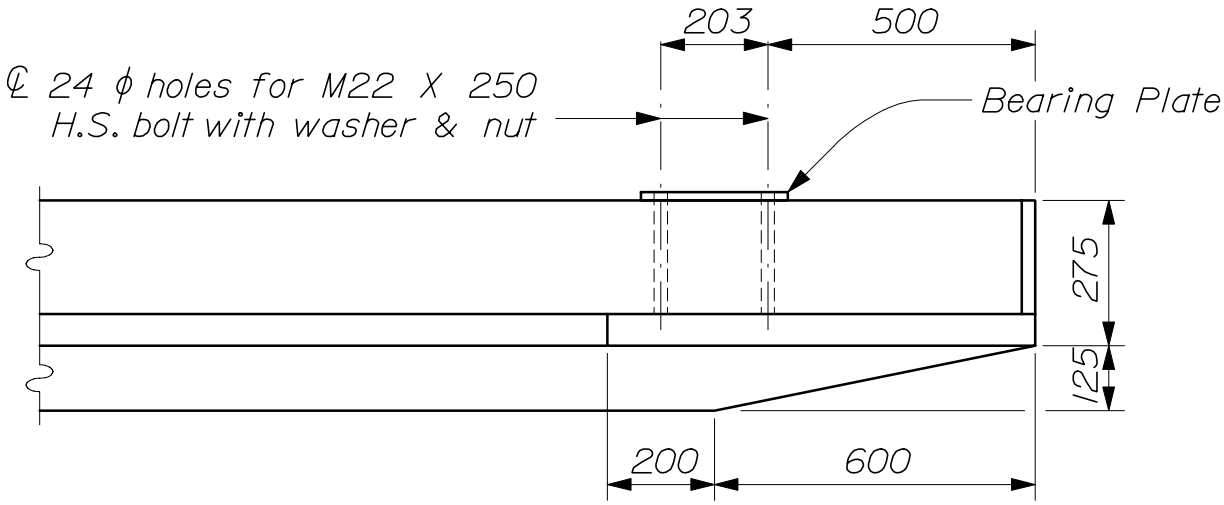

-- PLAN --
(Type IIIA)

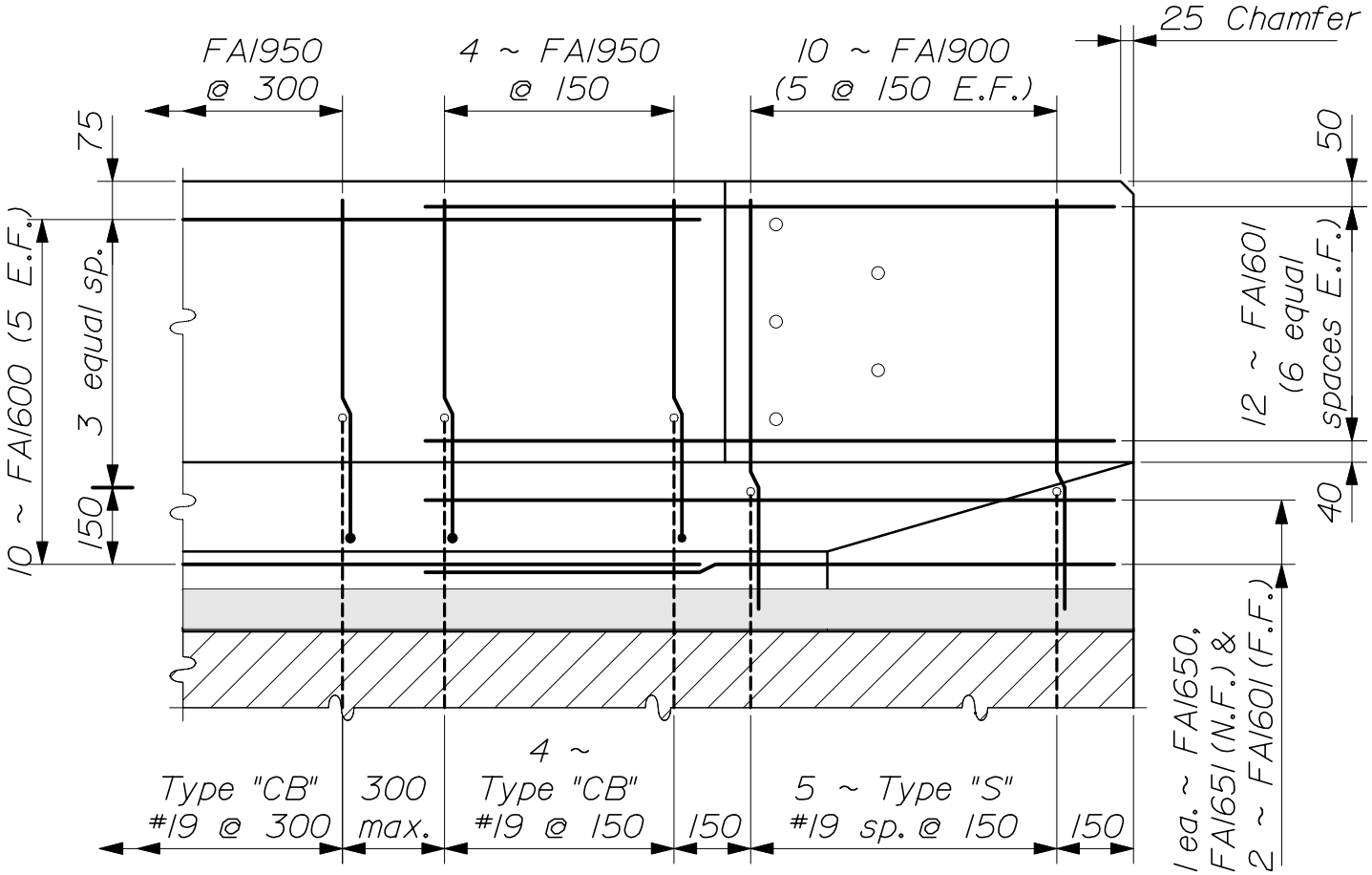

-- ELEVATION --
(Type IIIA)

PERMANENT CONCRETE BARRIER

526(07)

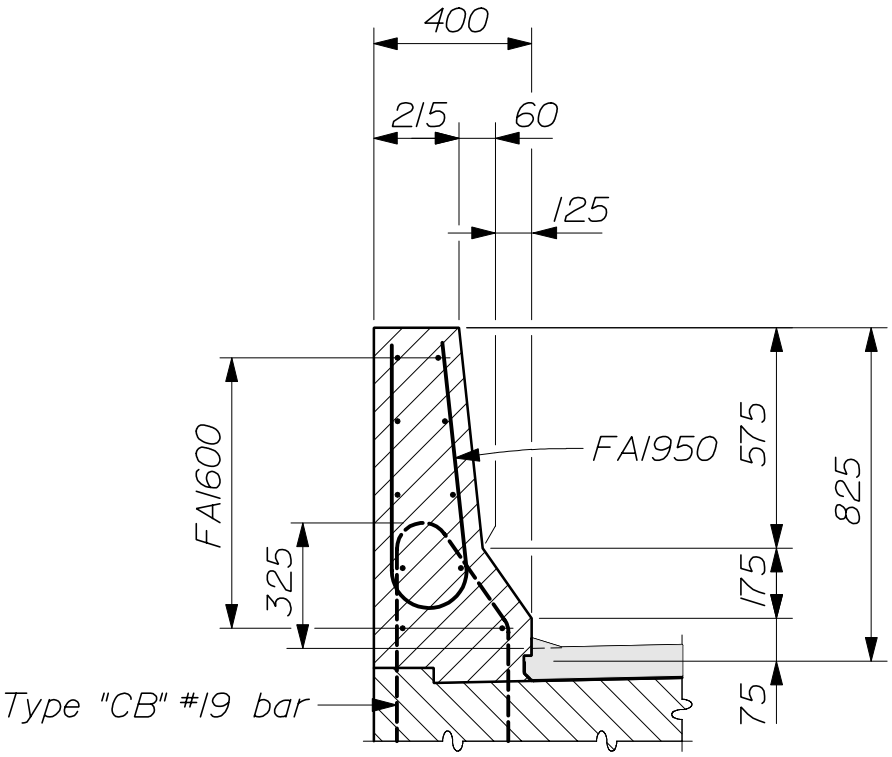

-- TYPICAL BARRIER SECTION --
(Type IIIA)

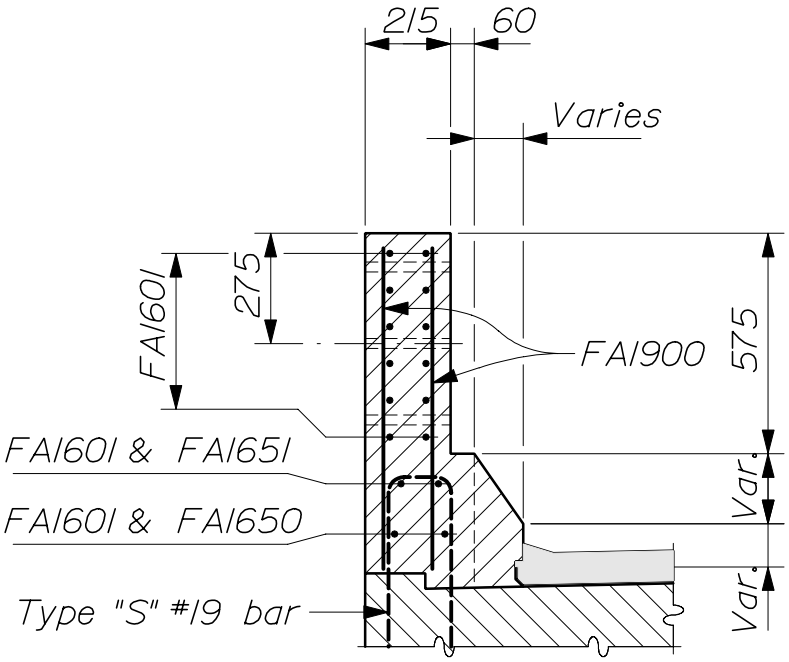

-- BARRIER RECESS SECTION --
(Type IIIA)

PERMANENT CONCRETE BARRIER

526(08)

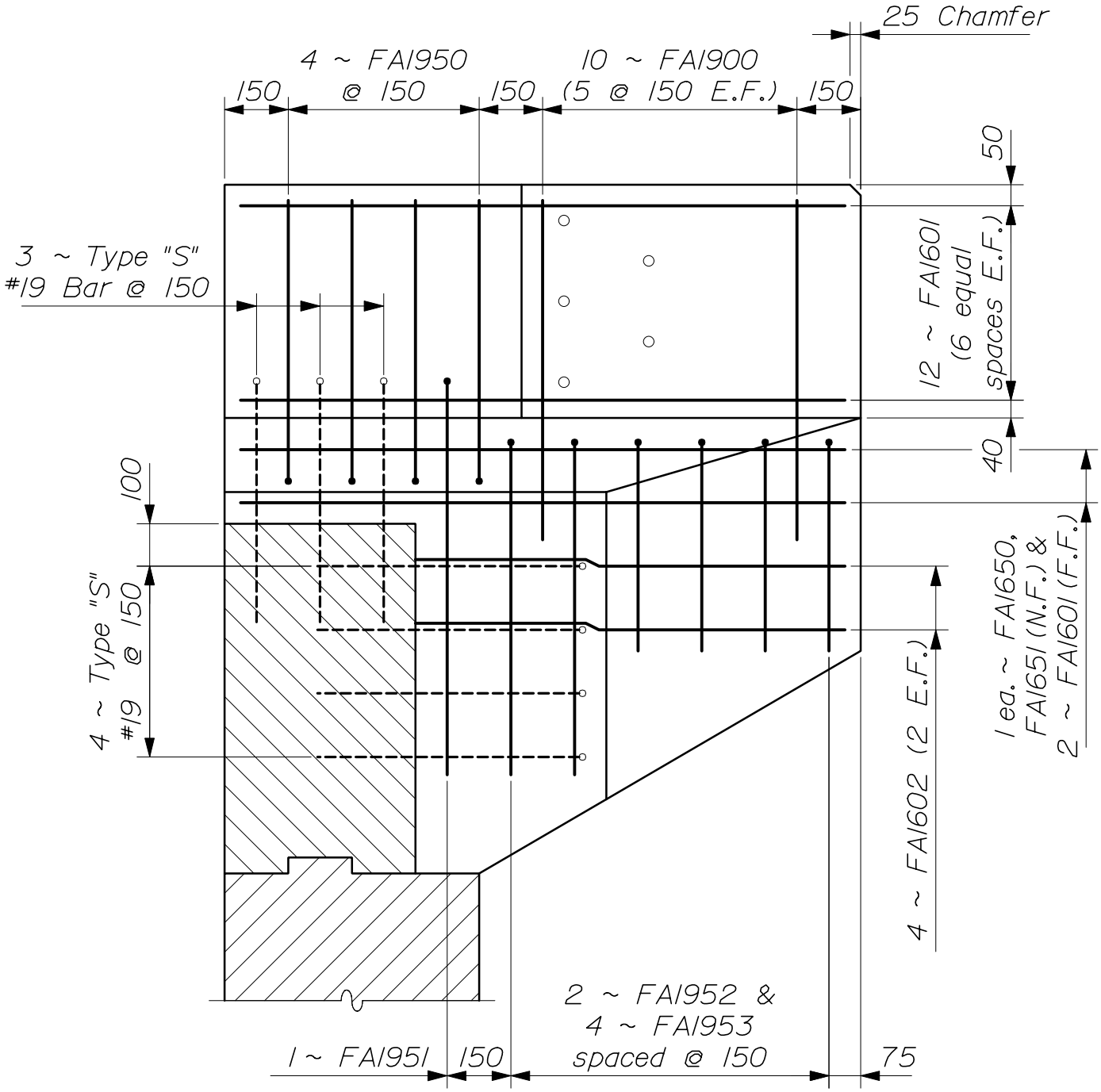

-- CANTILEVERED REINFORCING ELEVATION --
(Type IIIA)

# PERMANENT CONCRETE BARRIER
526(09)

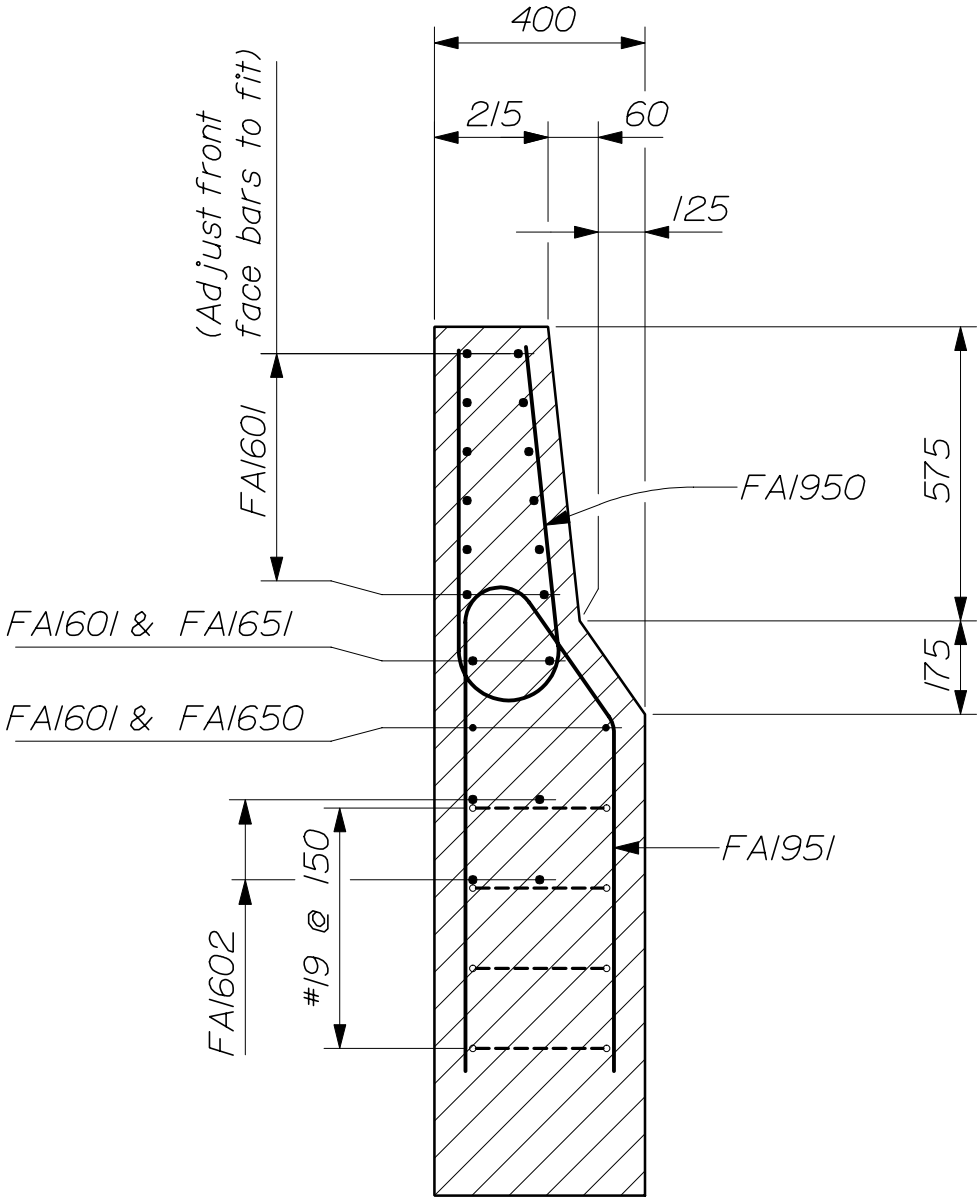

-- CANTILEVERED SECTION --
(Type IIIA)

PERMANENT CONCRETE BARRIER

526(10)

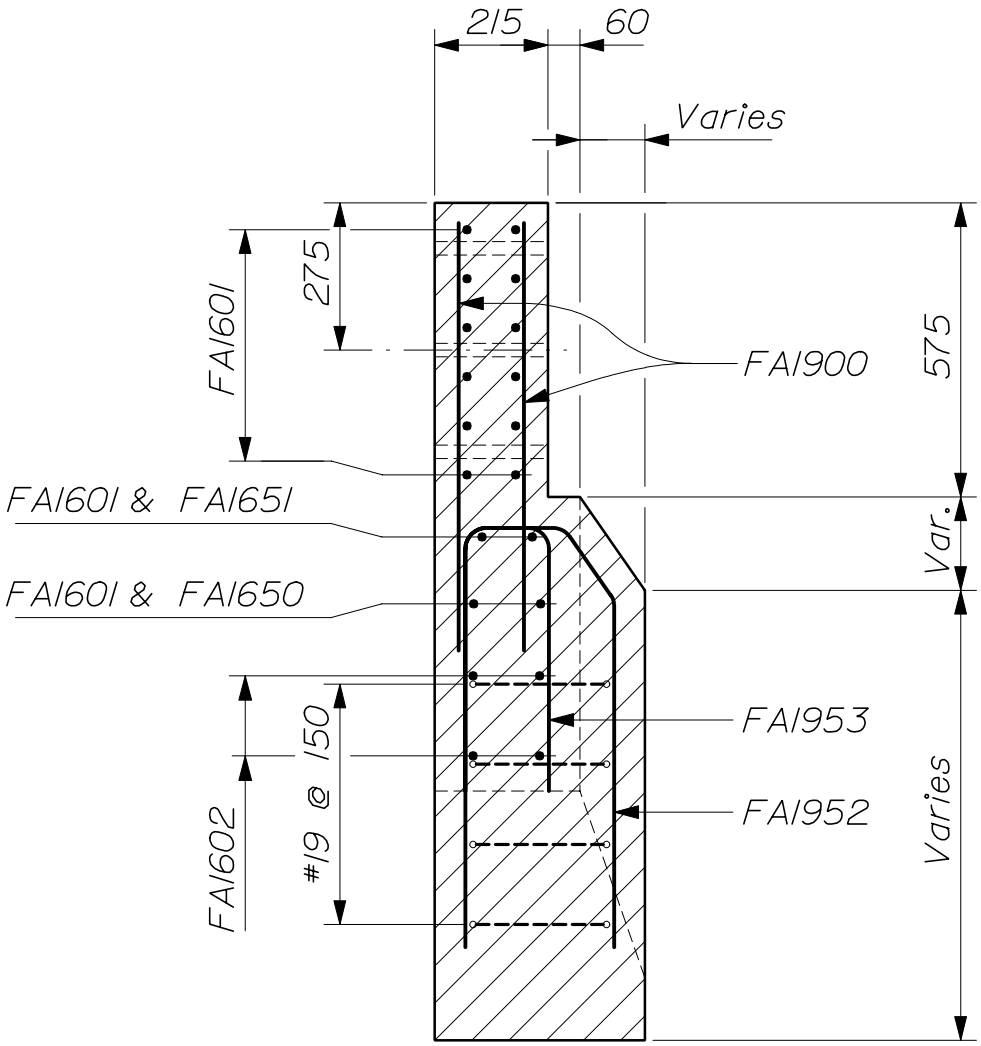

-- CANTILEVERED RECESS SECTION --
(Type IIIA)

PERMANENT CONCRETE BARRIER

526(11)

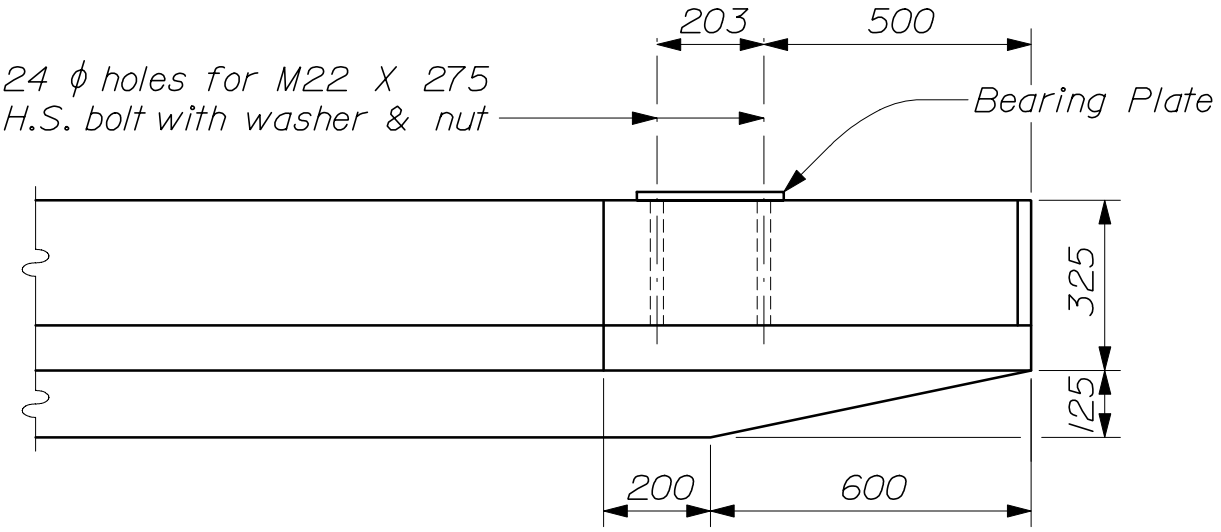

-- PLAN --
(Type IIIB)

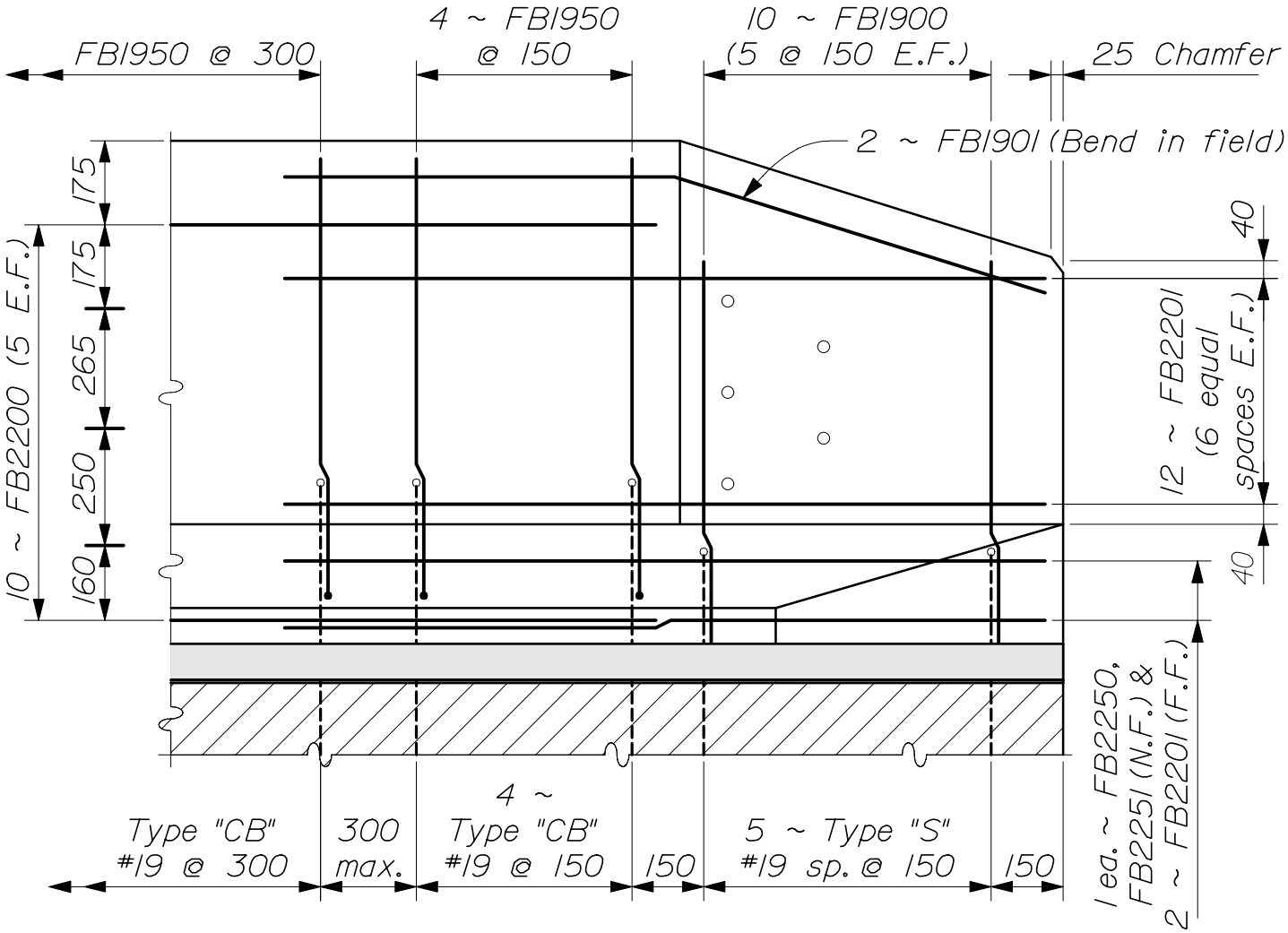

-- ELEVATION --
(Type IIIB)

PERMANENT CONCRETE BARRIER

526(12)

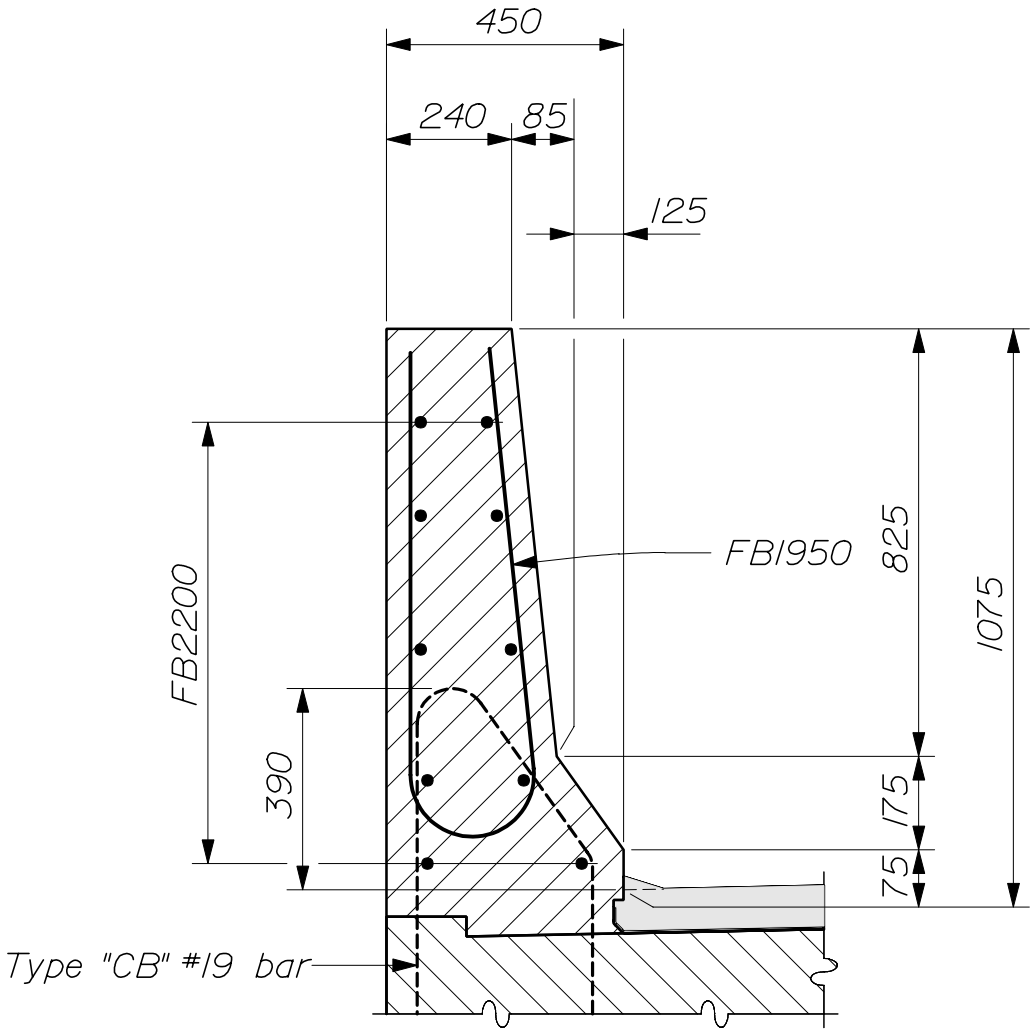

-- BARRIER SECTION --
(Type IIIB)

PERMANENT CONCRETE BARRIER

526(13)

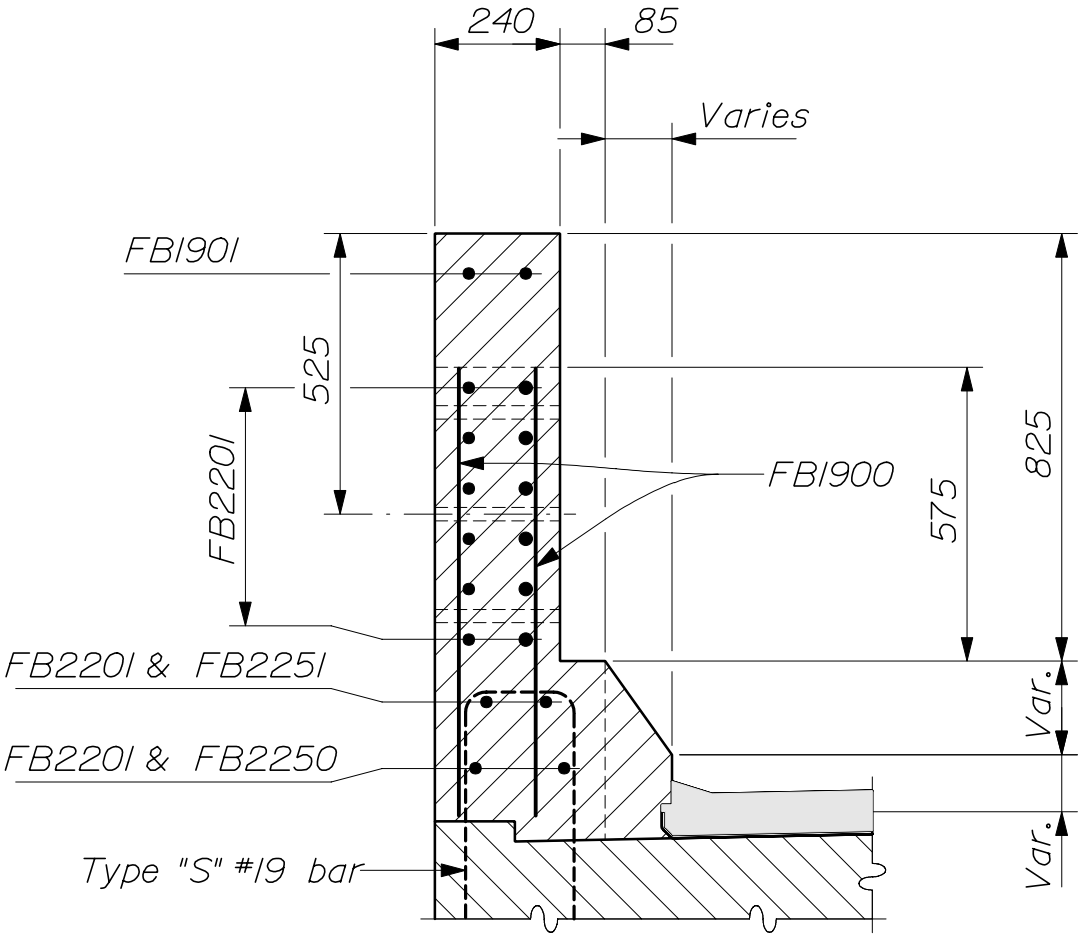

-- BARRIER END SECTION --
(Type IIIB)

PERMANENT CONCRETE BARRIER

526(14)

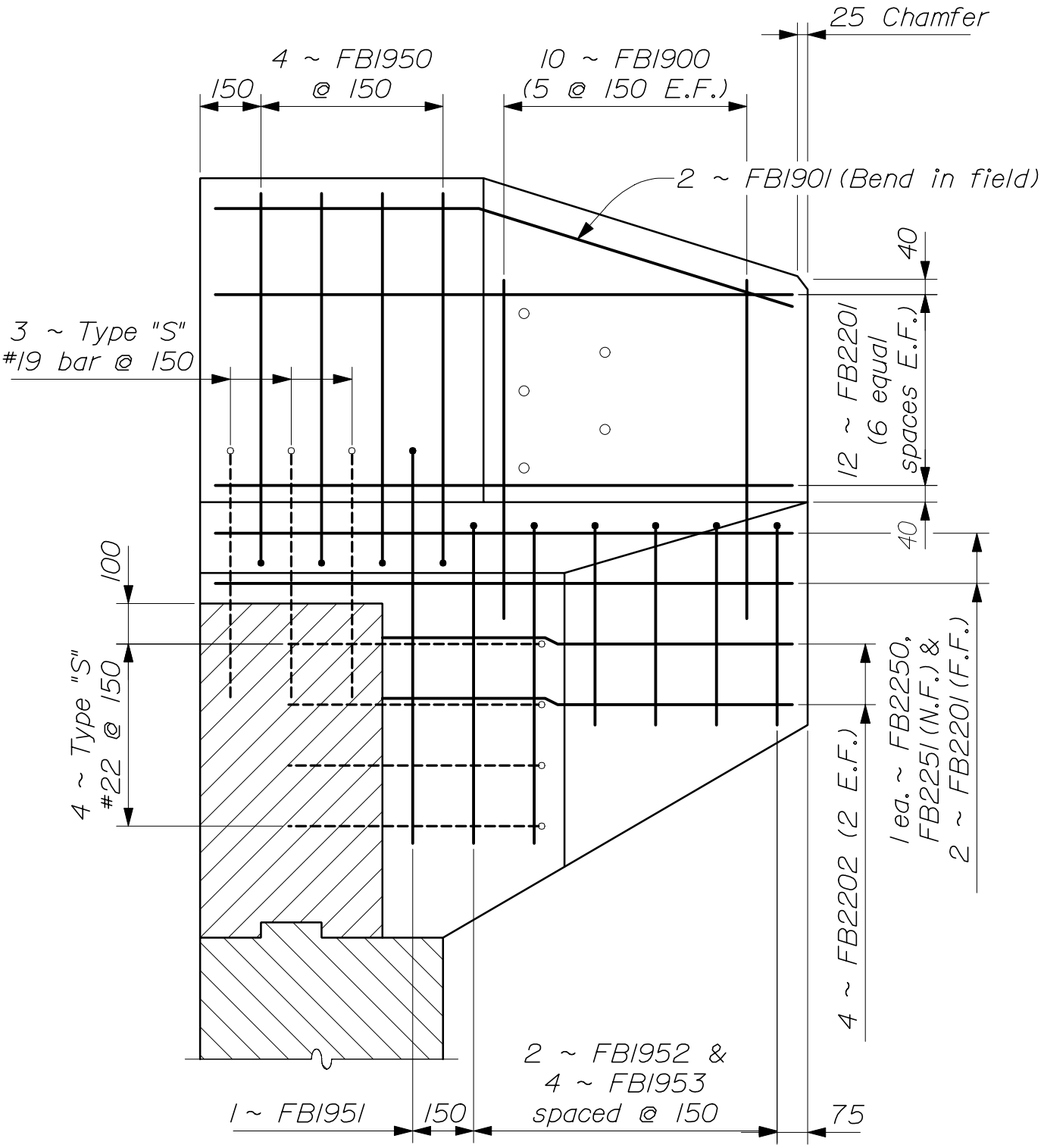

-- CANTILEVER REINFORCING ELEVATION --
(Type IIIB)

PERMANENT CONCRETE BARRIER

526(15)

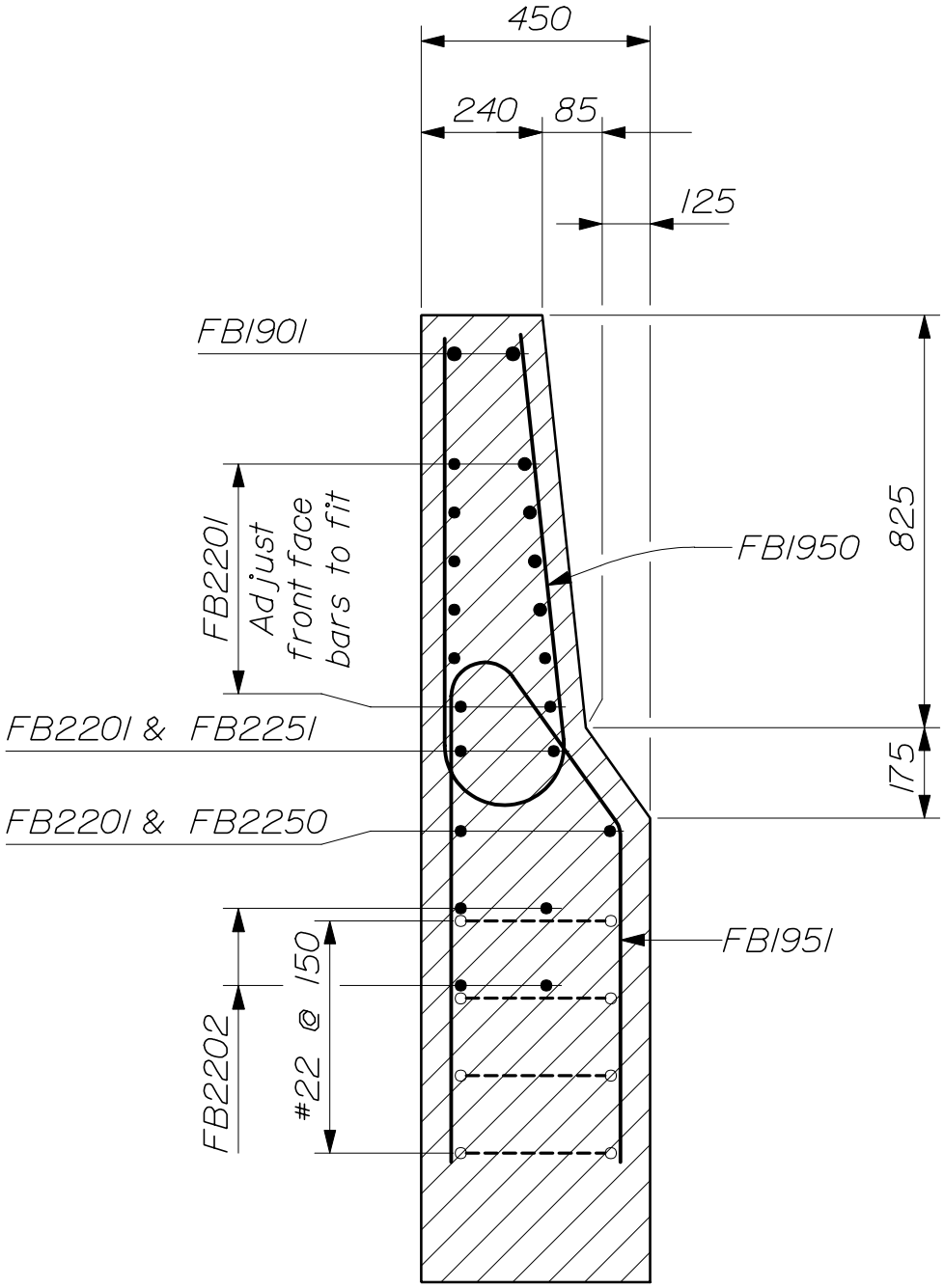

-- CANTILEVERED SECTION --
(Type IIIB)

PERMANENT CONCRETE BARRIER

526(16)

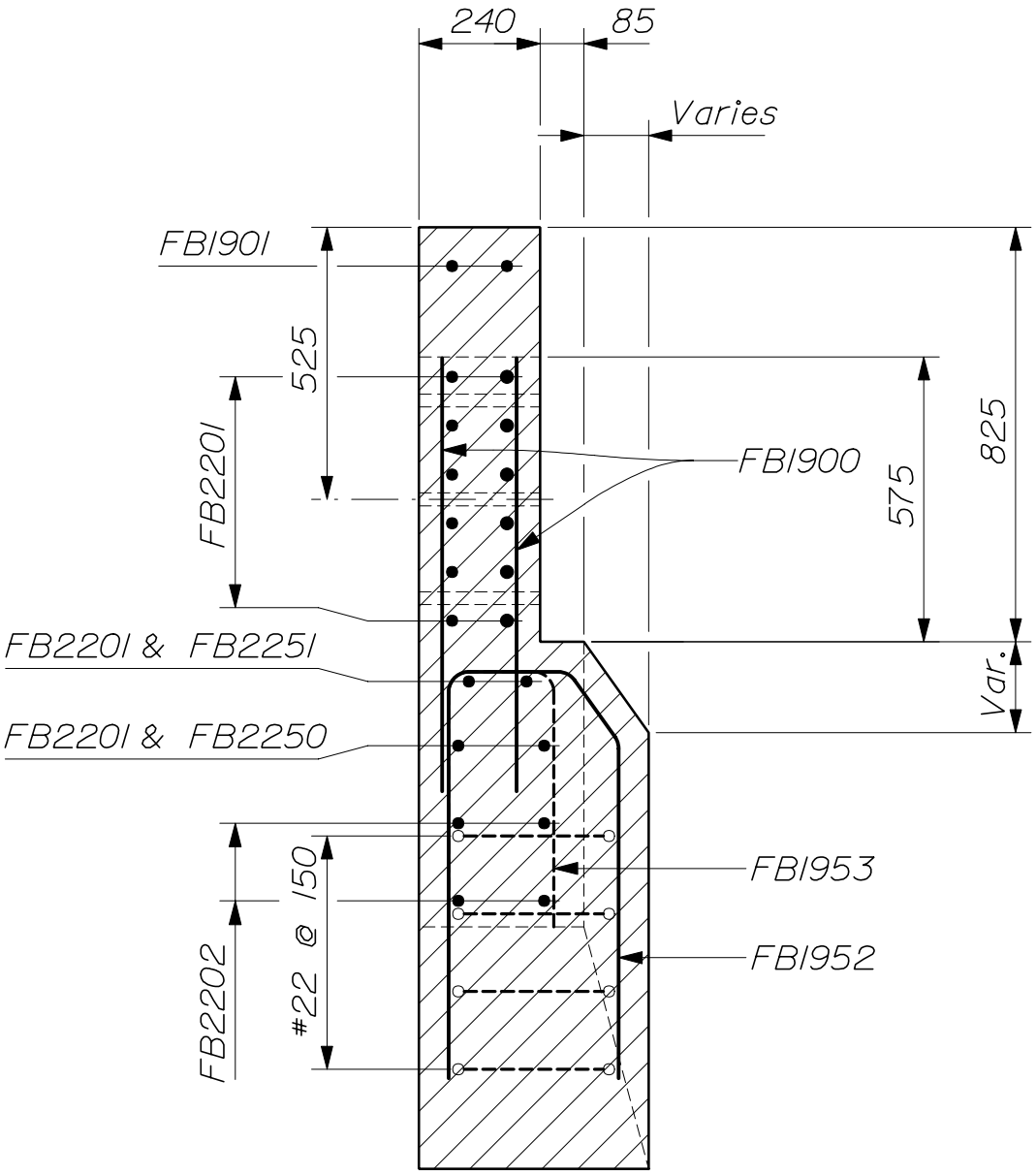

-- CANTILEVERED END SECTION --
(Type IIIB)

PERMANENT CONCRETE BARRIER

526(17)

BARRIER TYPE IIIA REINFORCING STEEL				
Mark	With Normal End		With Cantilevered End	
	Quantity	Length	Quantity	Length
FA1600	As req'd	9150 max.	As req'd	9150 max.
FA1601	14	1375	14	1420
FA1650	1	1400	1	1450
FA1651	1	1400	1	1450
FA1900	10	825	10	825
FA1950	As req'd	1500	As req'd	1500
FA1951	--	--	1	1985
FA1952	--	--	2	1840
FA1953	--	--	4	1175

(X) denotes cantilevered end dimension

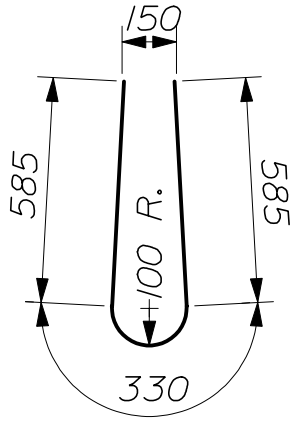

-- FA1950 --

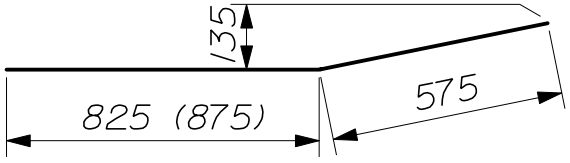

-- FA1650 --

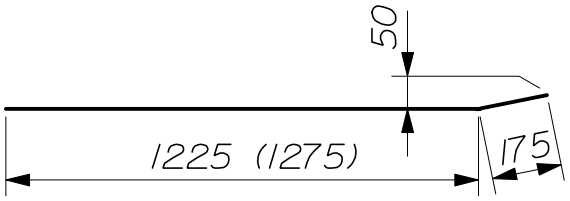

-- FA1651 --

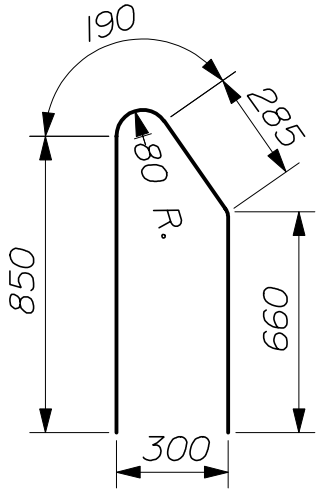

-- FA1951 --

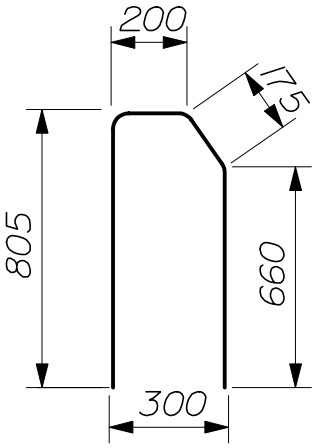

-- FA1952 --

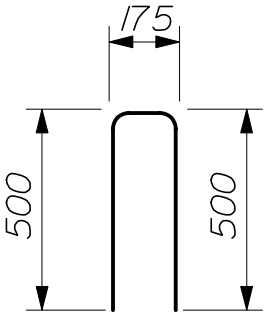

-- FA1953 --

PERMANENT CONCRETE BARRIER

526(18)

BARRIER TYPE IIIB REINFORCING STEEL				
Mark	With Normal End		With Cantilevered End	
	Quantity	Length	Quantity	Length
FB1900	10	850	10	850
FB1901	2	1650	2	1450
FB1950	As req'd	2000	As req'd	2000
FB1951	--	--	1	2125
FB1952	--	--	2	1880
FB1953	--	--	4	1220
FB2200	As req'd	18 300 max.	As req'd	18 300 max.
FB2201	16	1625	16	1420
FB2202	--	--	4	1000
FB2250	1	1650	1	1450
FB2251	1	1650	1	1450

(X) denotes cantilevered end dimension

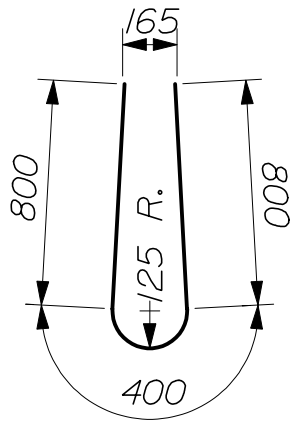

-- FB1950 --

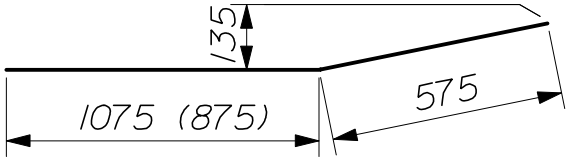

-- FB2250 --

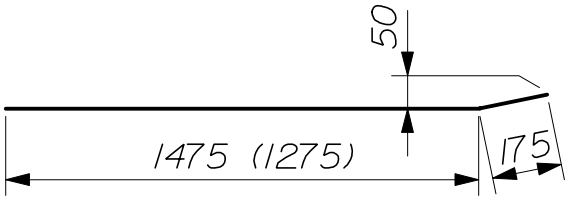

-- FB2251 --

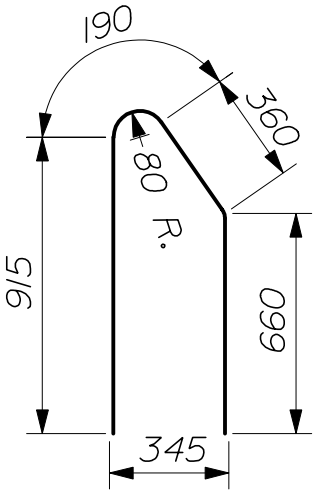

-- FB1951 --

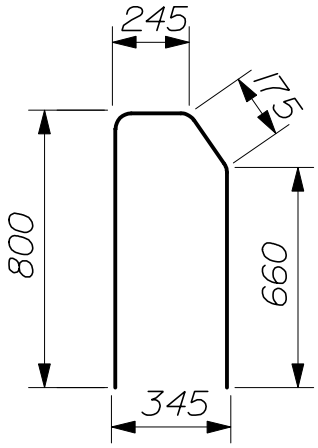

-- FB1952 --

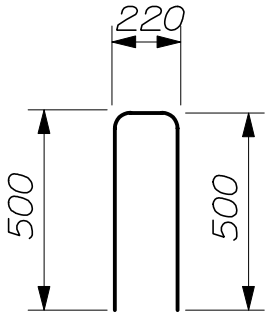

-- FB1953 --

PERMANENT CONCRETE BARRIER

526(19)

NOTES:

1. All work and materials shall conform to the provisions of Standard Specifications Section 526 - Concrete Barrier (Permanent Concrete Barrier).

2. Reinforcing bar designations Type "S" and "CB" refer to type - bending diagrams as shown on the main Reinforcing Steel Schedule. These bars are detailed on the Design Drawings and are included for payment in the Reinforcing Steel pay items.

3. Reinforcing steel shall have 40 mm minimum concrete cover, except that stirrups Type "S" and "CB" shall have 50 mm minimum concrete cover.

4. The first two digits following the letters of the mark indicate the size of the reinforcing bar. (FA1600 = bar size #16.) All dimensions are out - to - out of bar.

5. The minimum lap splice length for FA1500 bars is 550 mm. The minimum lap splice length for FB2200 bars is 1050 mm.

6. The quantities of reinforcing bars shown are for one barrier end only.

7. Bolt holes in concrete shall be formed by a method approved by the Engineer.

8. Payment for anchor bolts and bearing plates will be considered incidental to the concrete barrier pay item. Class 8.8.3 bolts shall be used when corrosion - resistant steel guardrail is specified on the approach roadway.

9. Permanent Concrete Barrier is designed for attachment of Bridge Transition Type "1" unless otherwise indicated on the Design Drawings. Refer to Section606 for details.

10. After installation of the guardrail is complete, upset the threads on the anchor bolts in three (3) places around each bolt, at the junction of the nut and the exposed thread, with a center punch or similar tool.

11. If there is a conflict between these Standard Details and the Design Drawings, the requirements of the Design Drawings shall be followed.

MATERIALS:

Concrete----------Class "LP"
Reinforcing Steel----------ASTM A615/A615M, Grade 420
Bearing Plate--------AASHTO M 183M/M 183 (ASTM A 36/A 36M) (Galvanized)
Bolts----------ASTM F 568, Class 8.8 (Galvanized)

PERMANENT CONCRETE BARRIER

526(20)

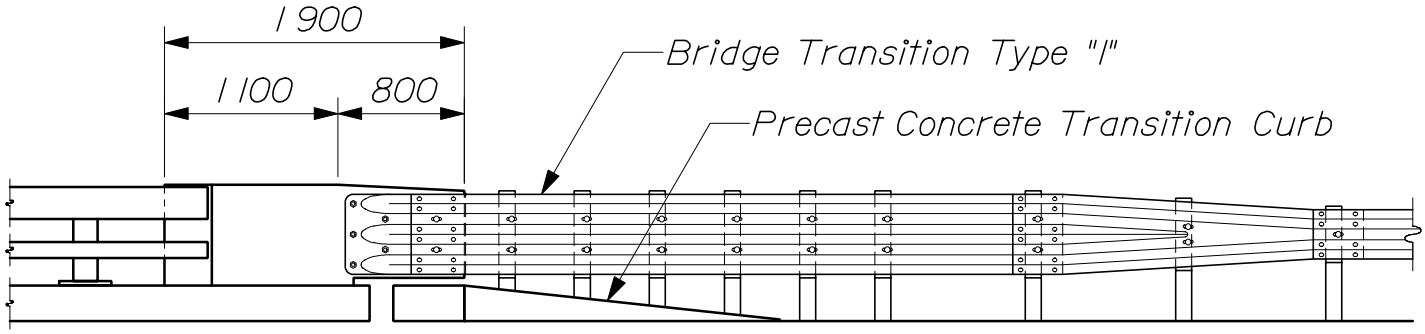

-- CONCRETE TRANSITION BARRIER --
(TRAFFIC RAILING)

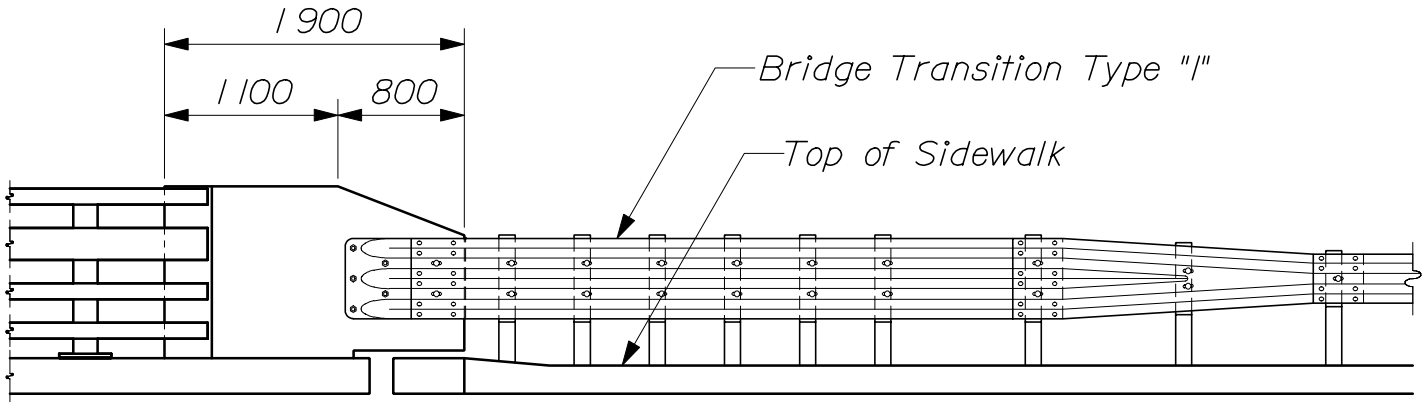

-- CONCRETE TRANSITION BARRIER --
(TRAFFIC/PEDESTRIAN RAILING)

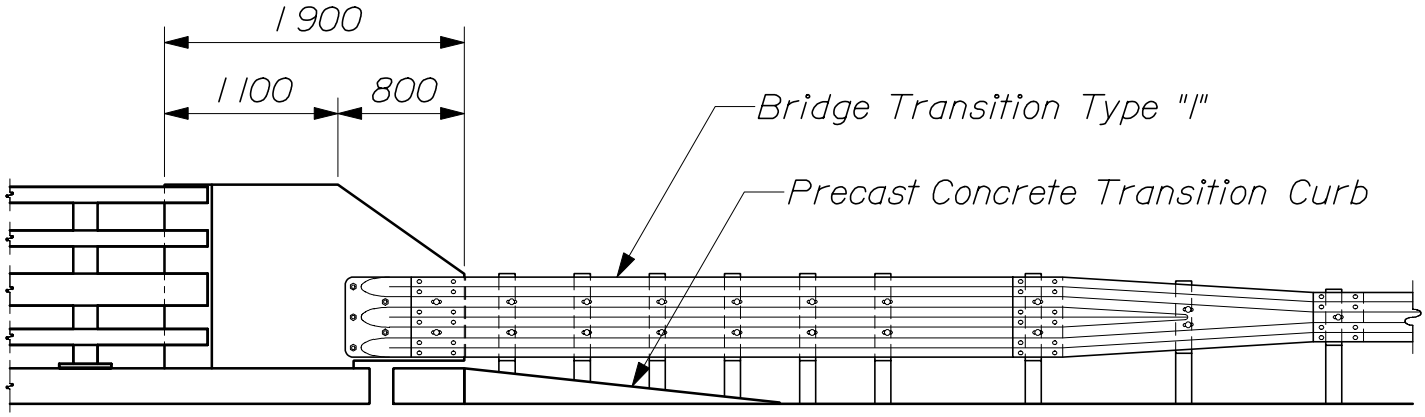

-- CONCRETE TRANSITION BARRIER --
(TRAFFIC/BICYCLE RAILING)

CONCRETE TRANSITION BARRIER

526(21)

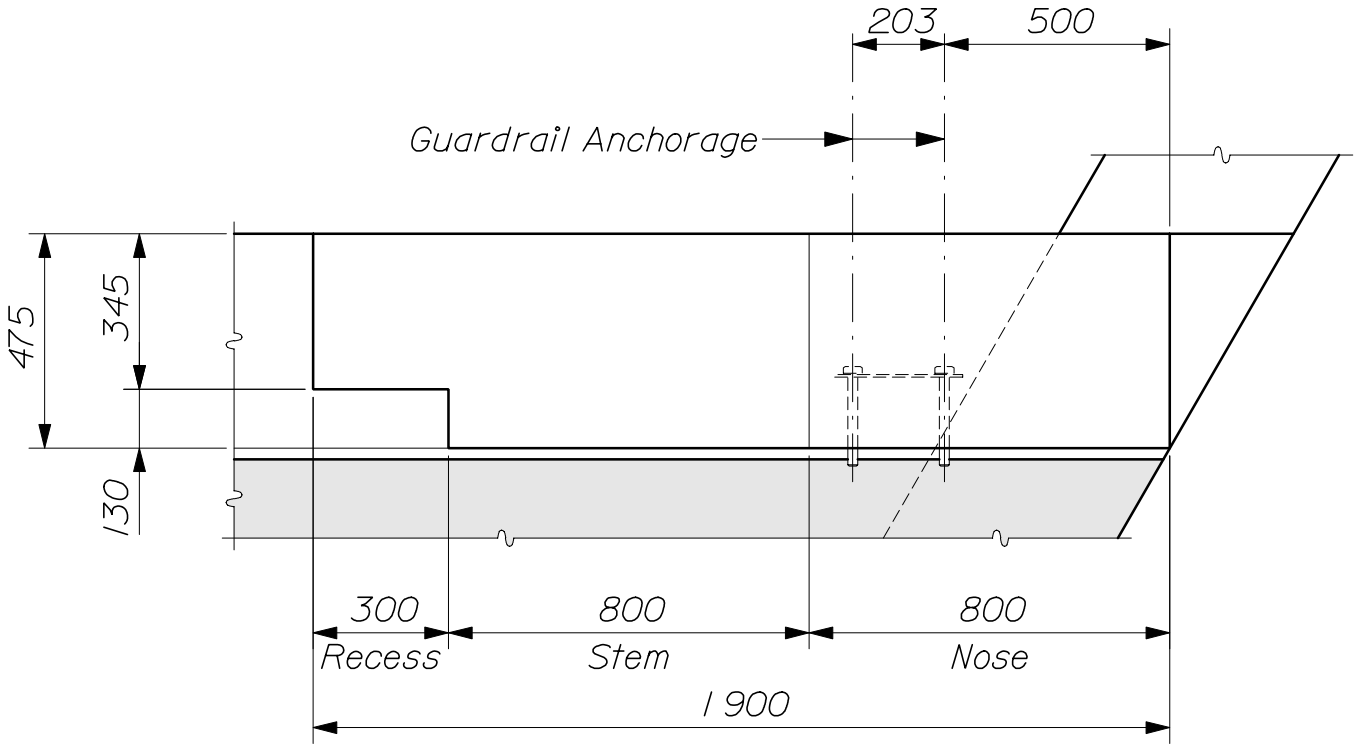

-- TRANSITION BARRIER PLAN --
(Typical all transition barrier types)

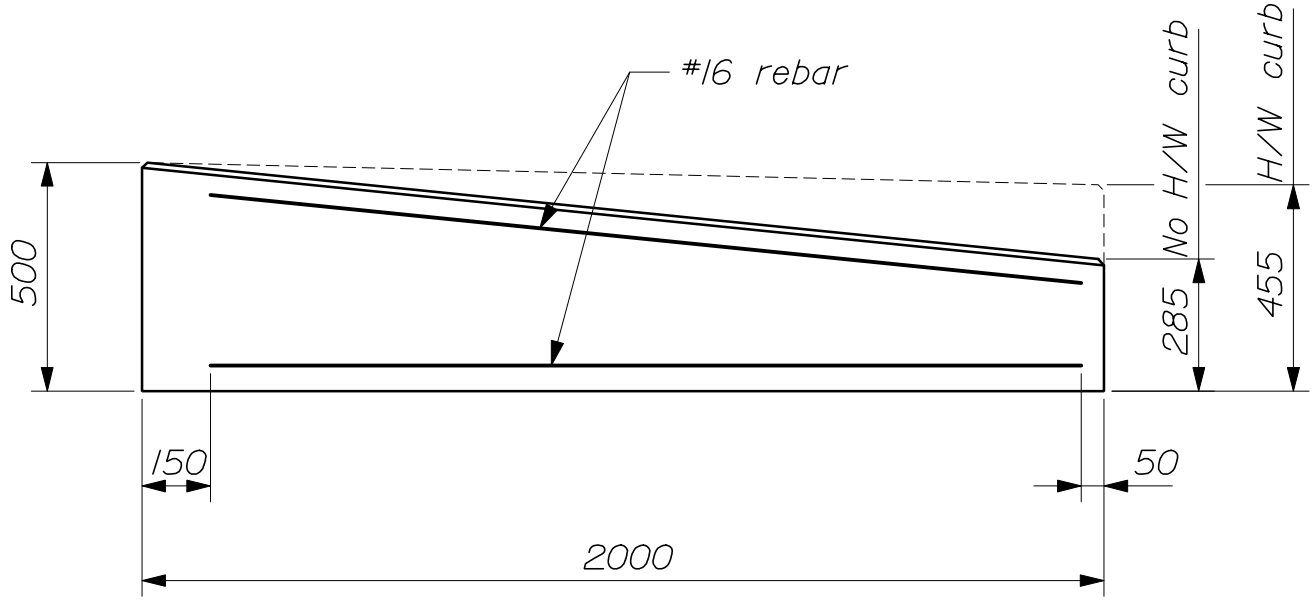

-- PRECAST CONCRETE TRANSITION CURB --

CONCRETE TRANSITION BARRIER

526(22)

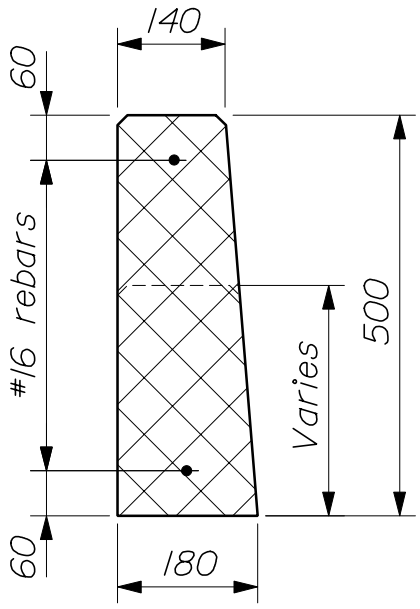

-- CURB SECTION --

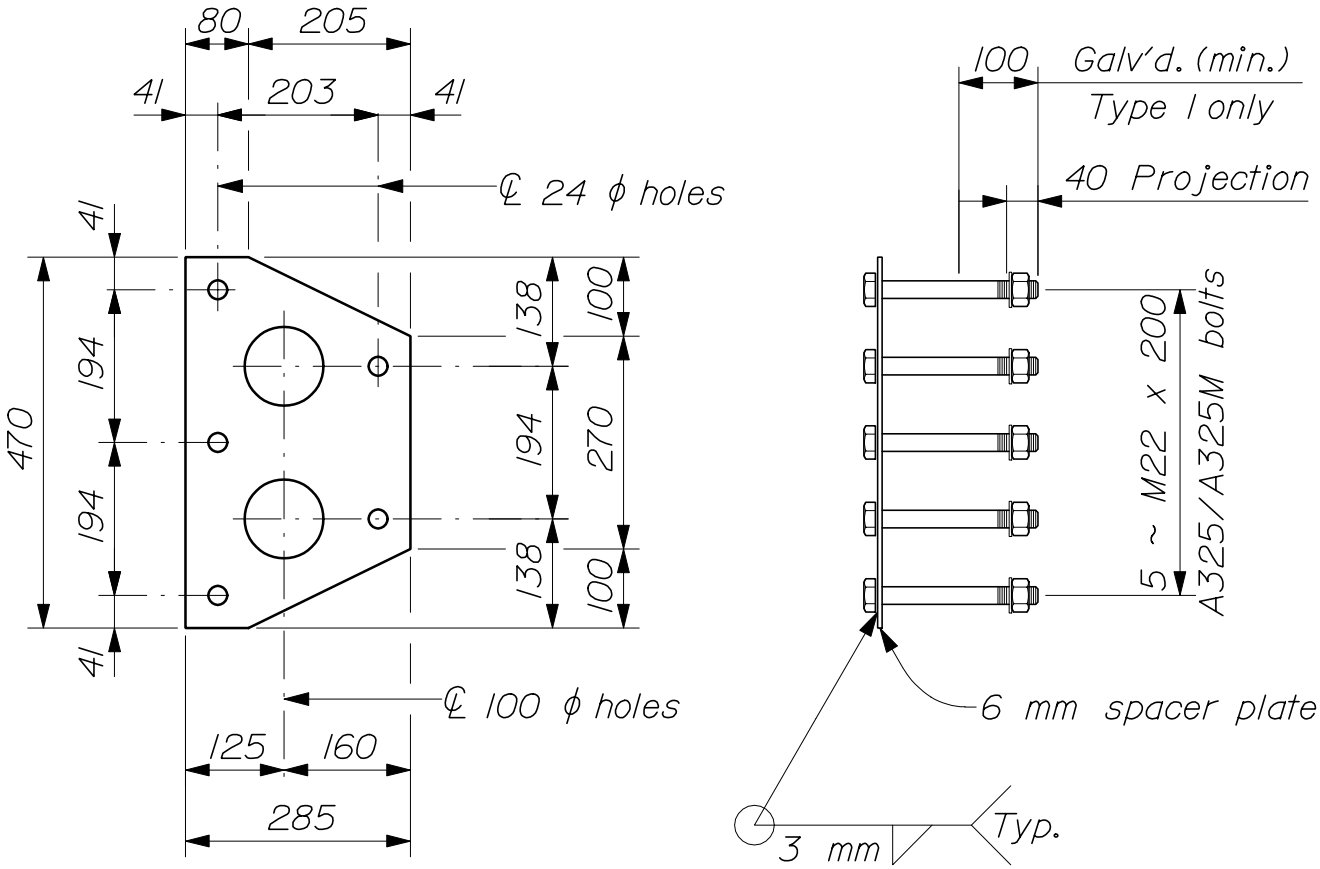

-- GUARD RAIL ANCHORAGE --

CONCRETE TRANSITION BARRIER

526(23)

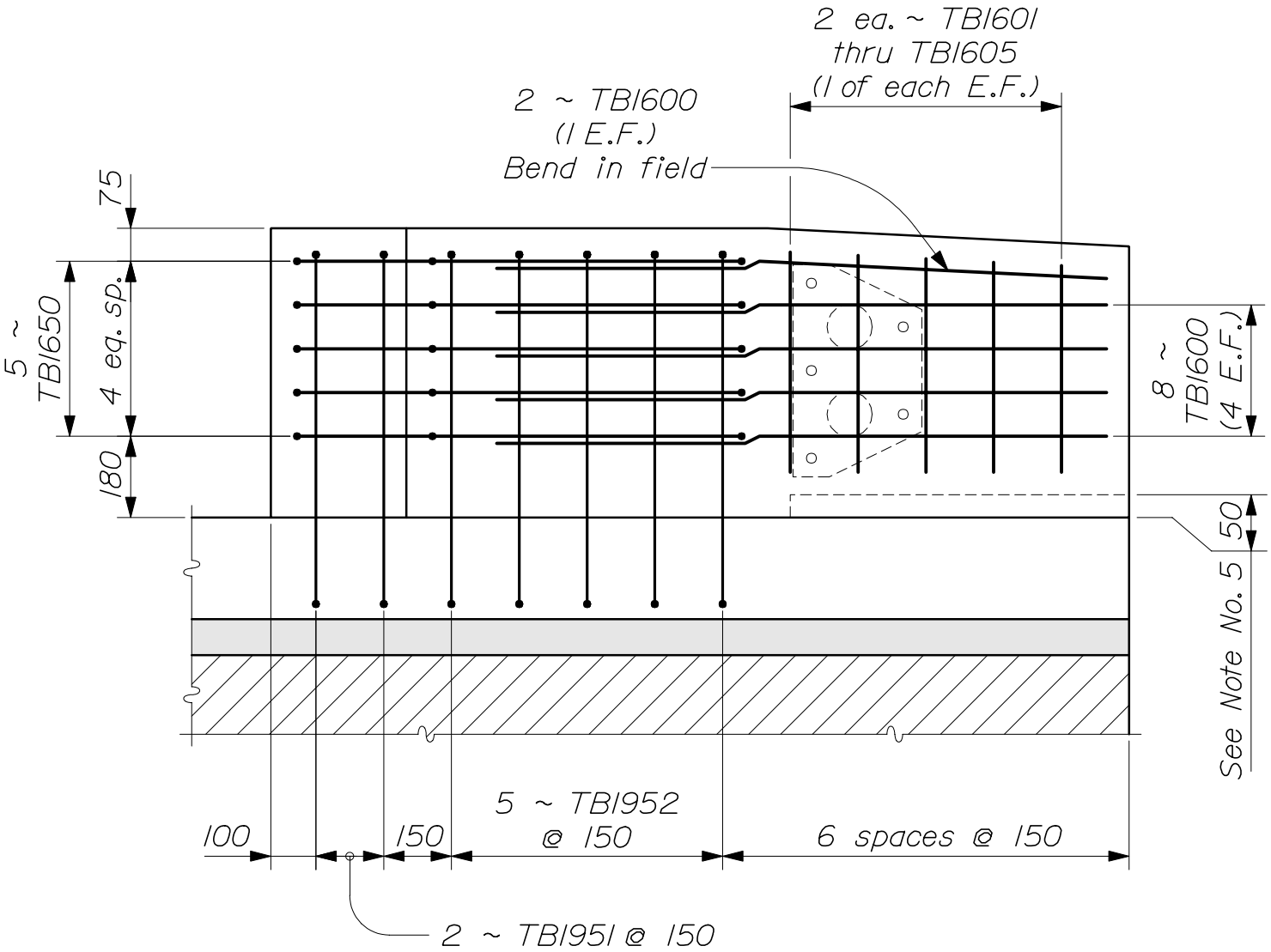

-- TRANSITION BARRIER ELEVATION --
(Traffic Railing)

Note: Curb reinforcing steel not shown

CONCRETE TRANSITION BARRIER

526(24)

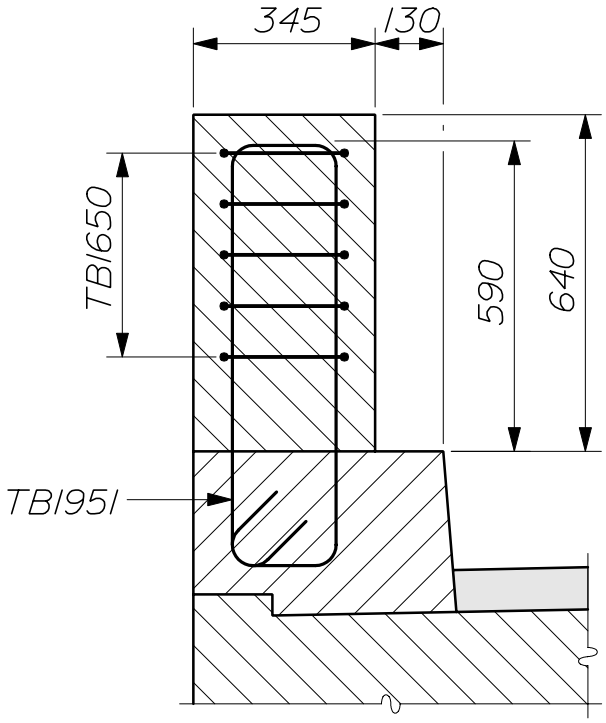

-- SECTION THRU RECESS --
(Traffic Railing)

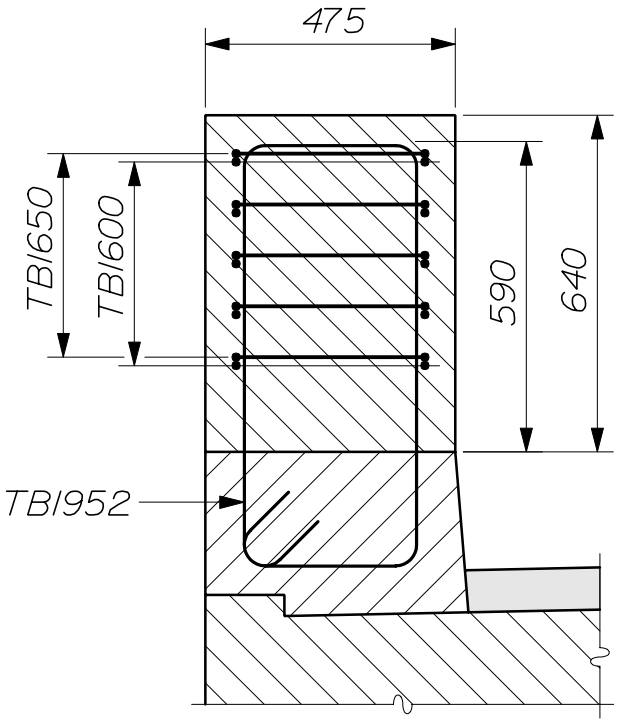

-- SECTION THRU STEM --
(Traffic Railing)

CONCRETE TRANSITION BARRIER

526(25)

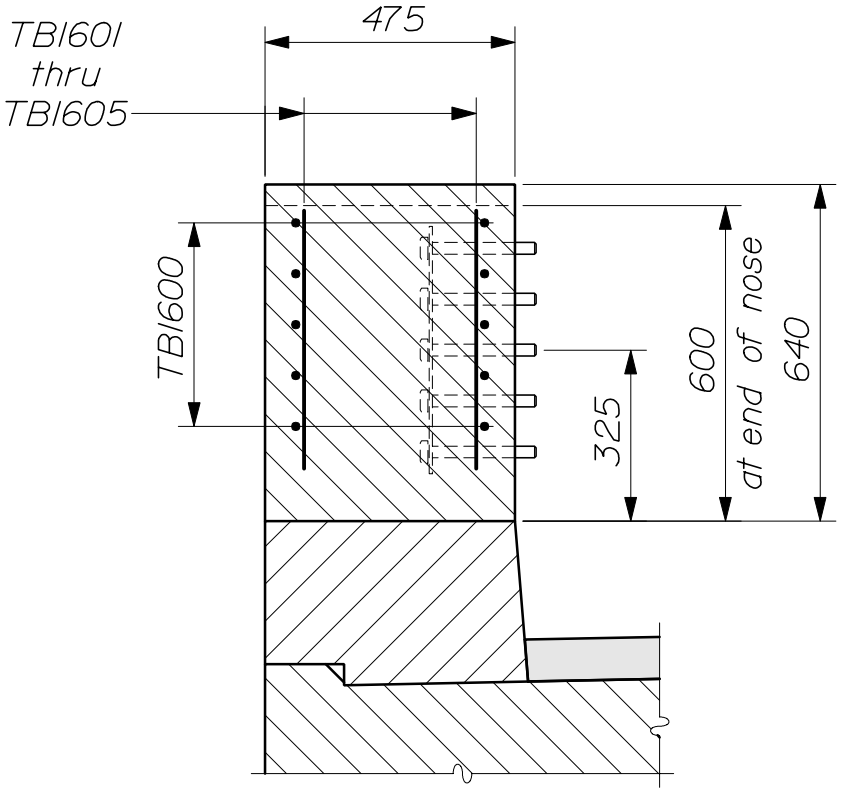

-- SECTION THRU NOSE --
(Traffic Railing)

CONCRETE TRANSITION BARRIER

526(26)

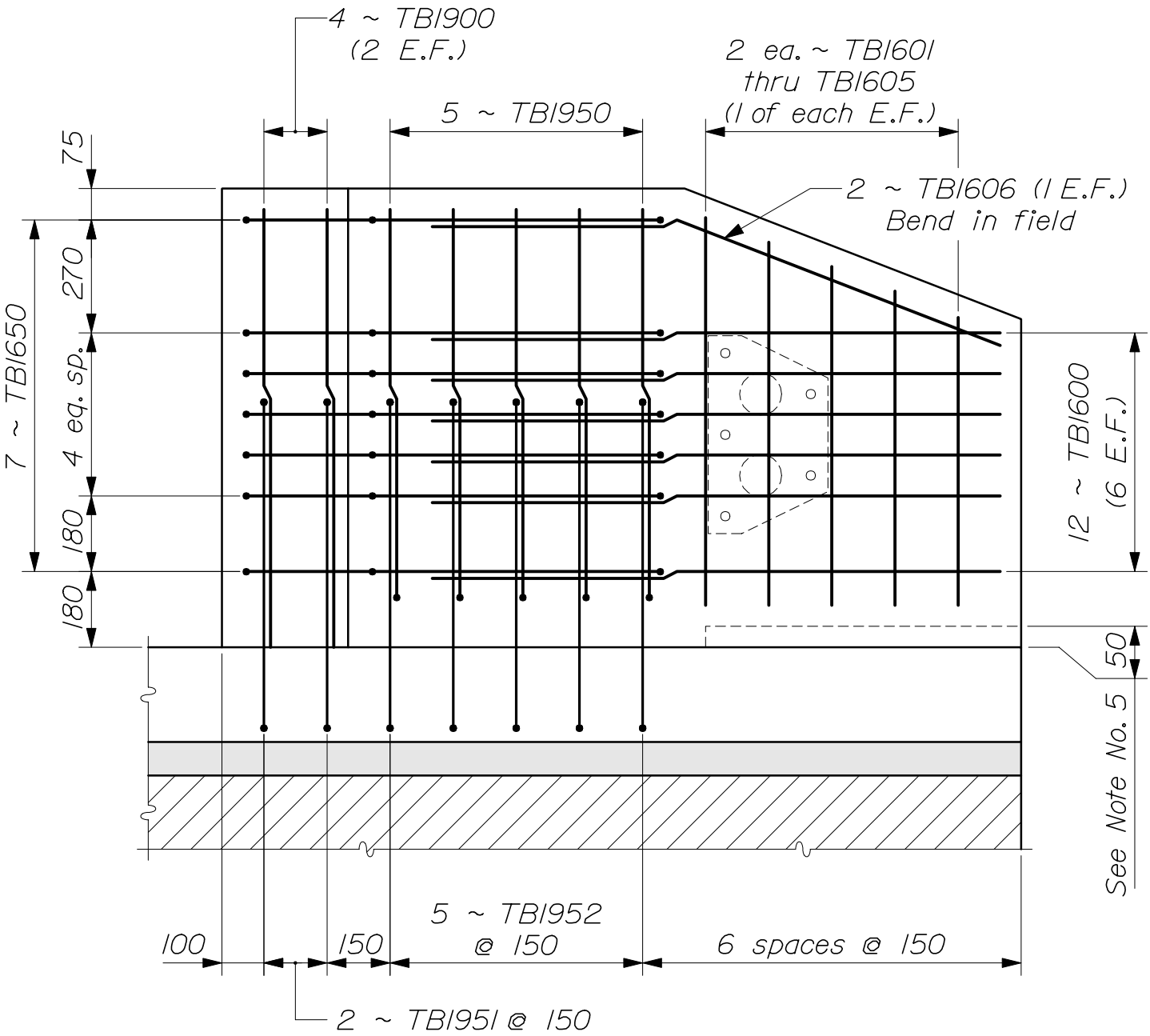

-- TRANSITION BARRIER ELEVATION --
(Traffic / Pedestrian Railing)

Note: Curb reinforcing steel not shown

CONCRETE TRANSITION BARRIER

526(27)

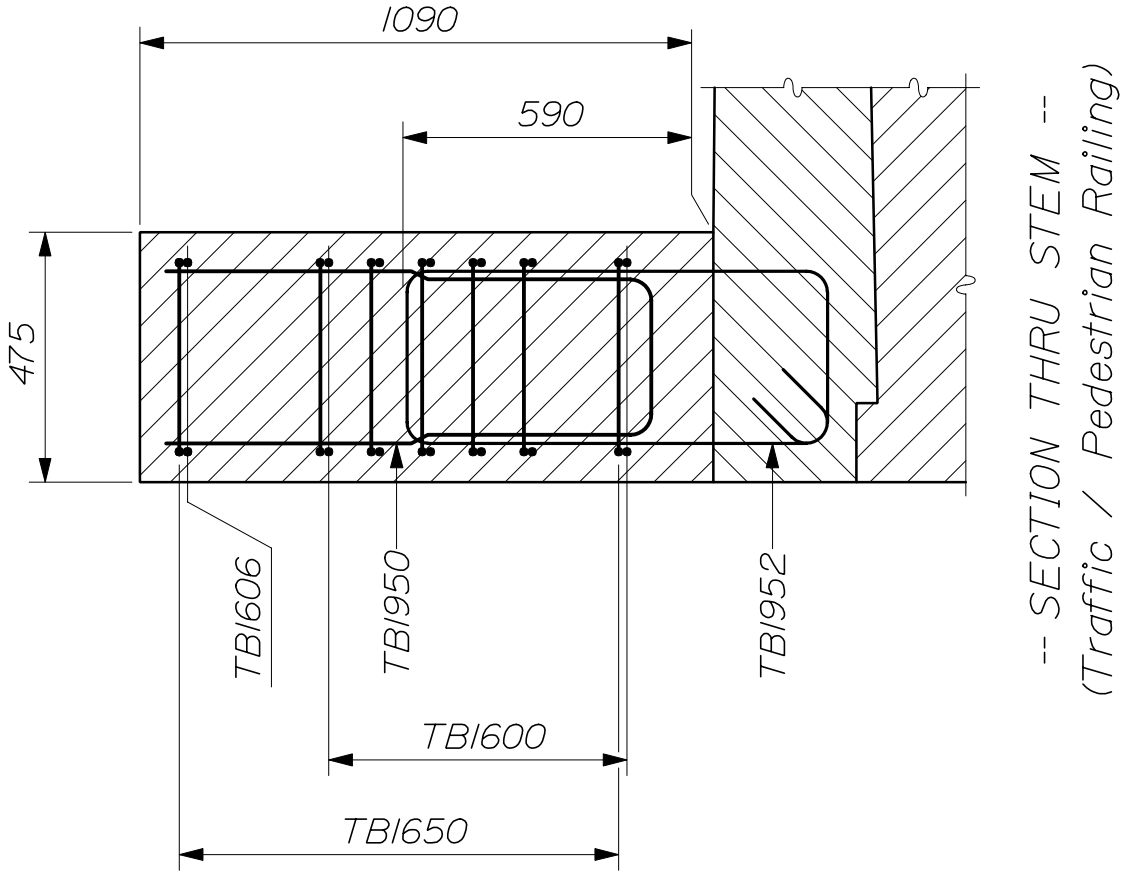

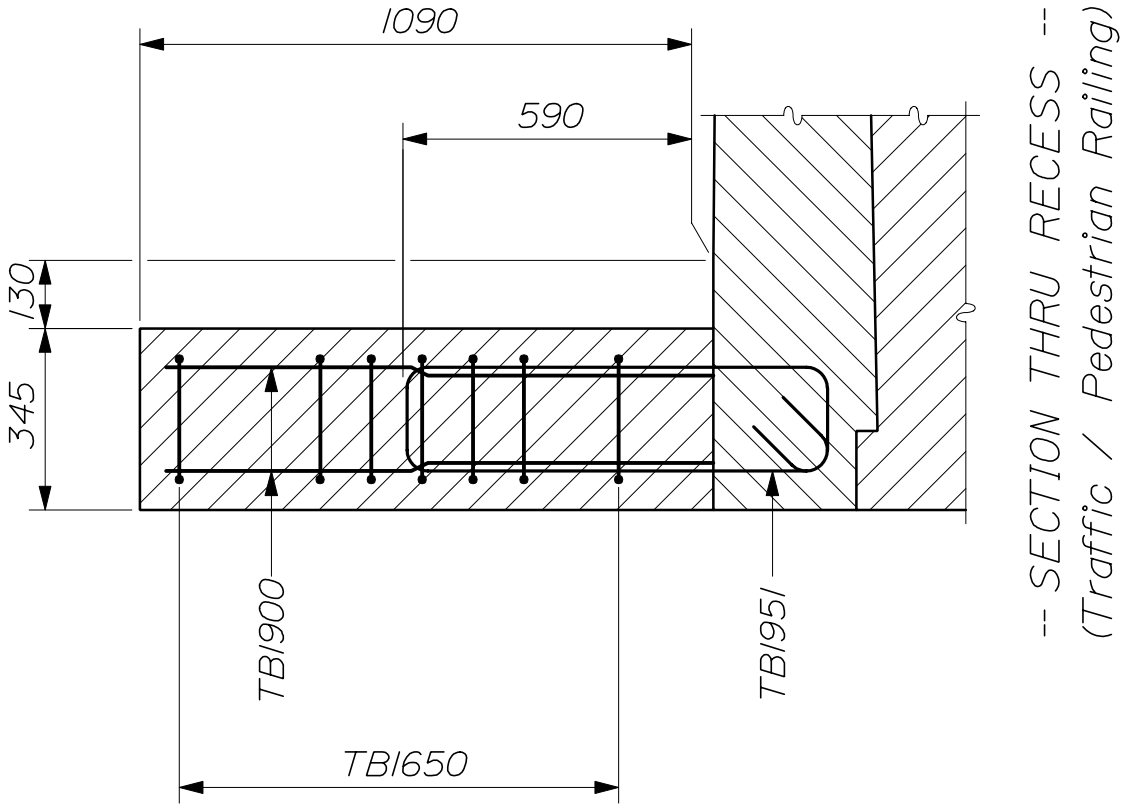

CONCRETE TRANSITION BARRIER

526(28)

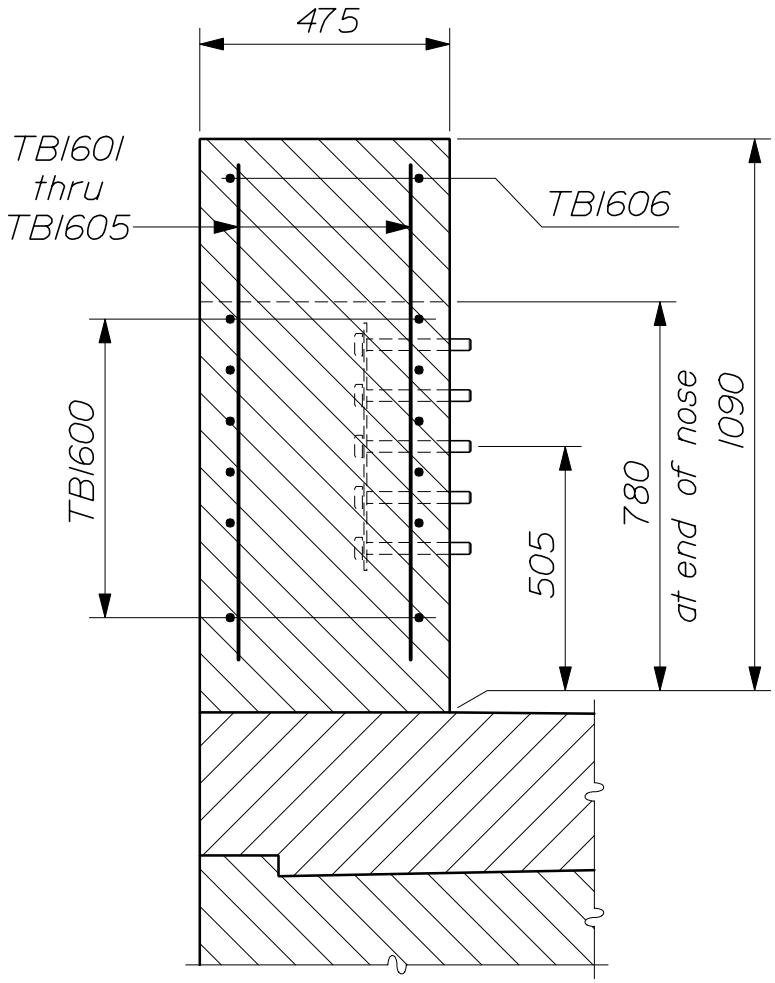

-- SECTION THRU NOSE --
(Traffic / Pedestrian Railing)

CONCRETE TRANSITION BARRIER

526(29)

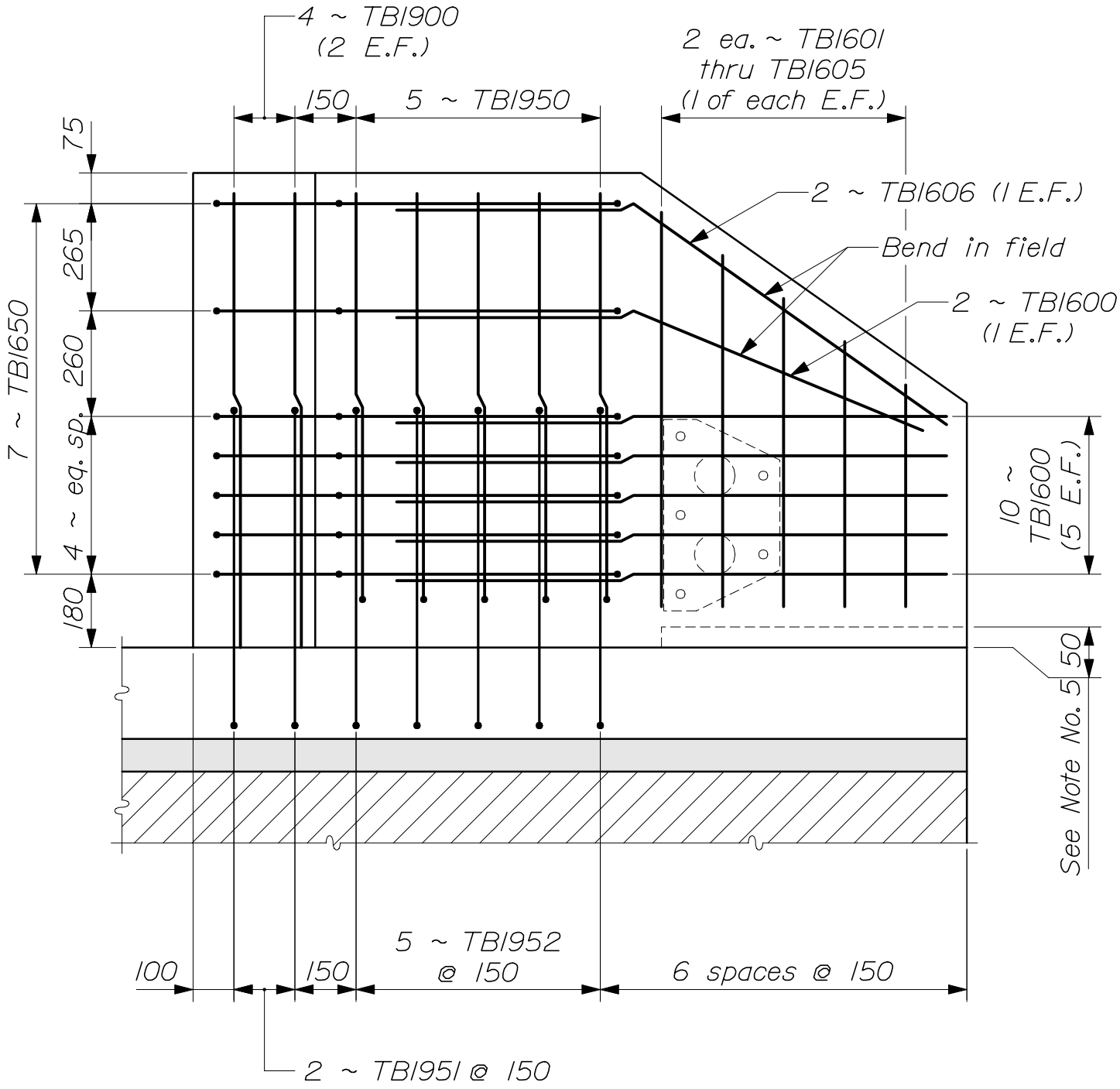

-- TRANSITION BARRIER ELEVATION --
(Traffic / Bicycle Railing)

Note: Curb reinforcing steel not shown

CONCRETE TRANSITION BARRIER

526(30)

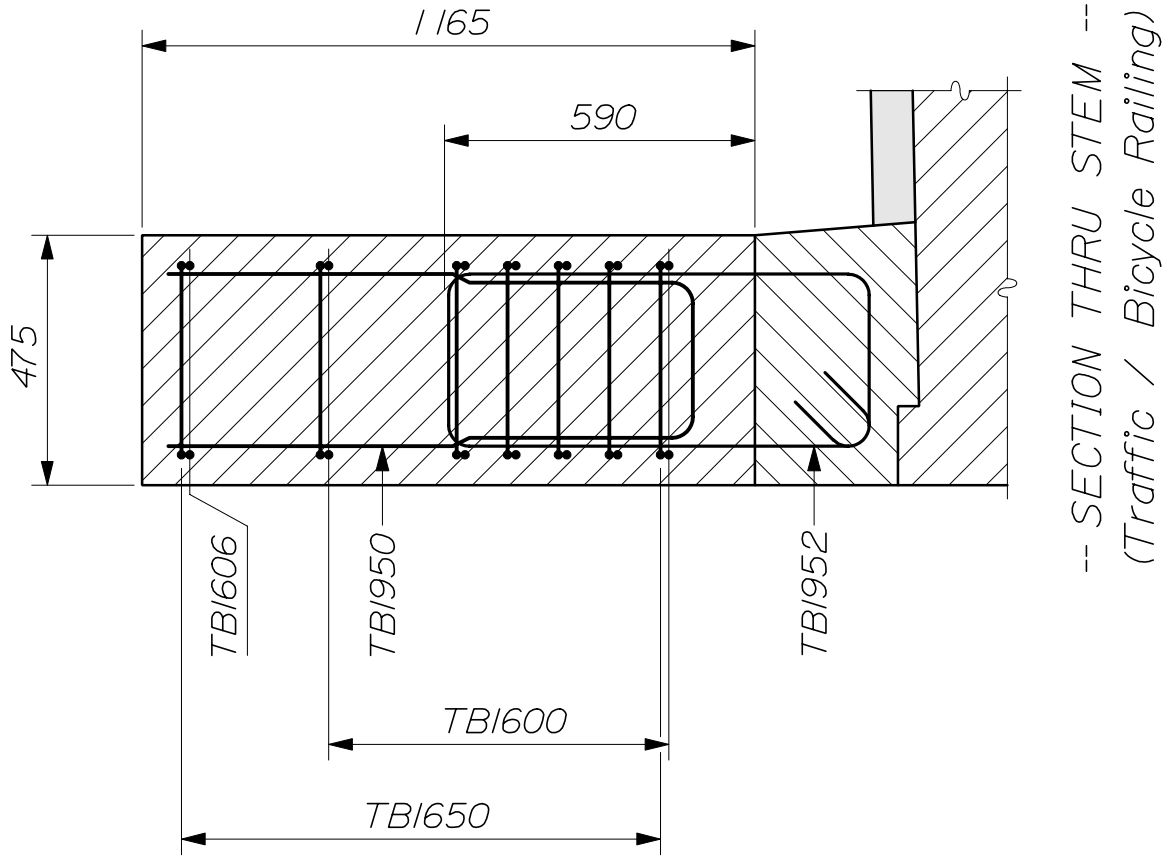

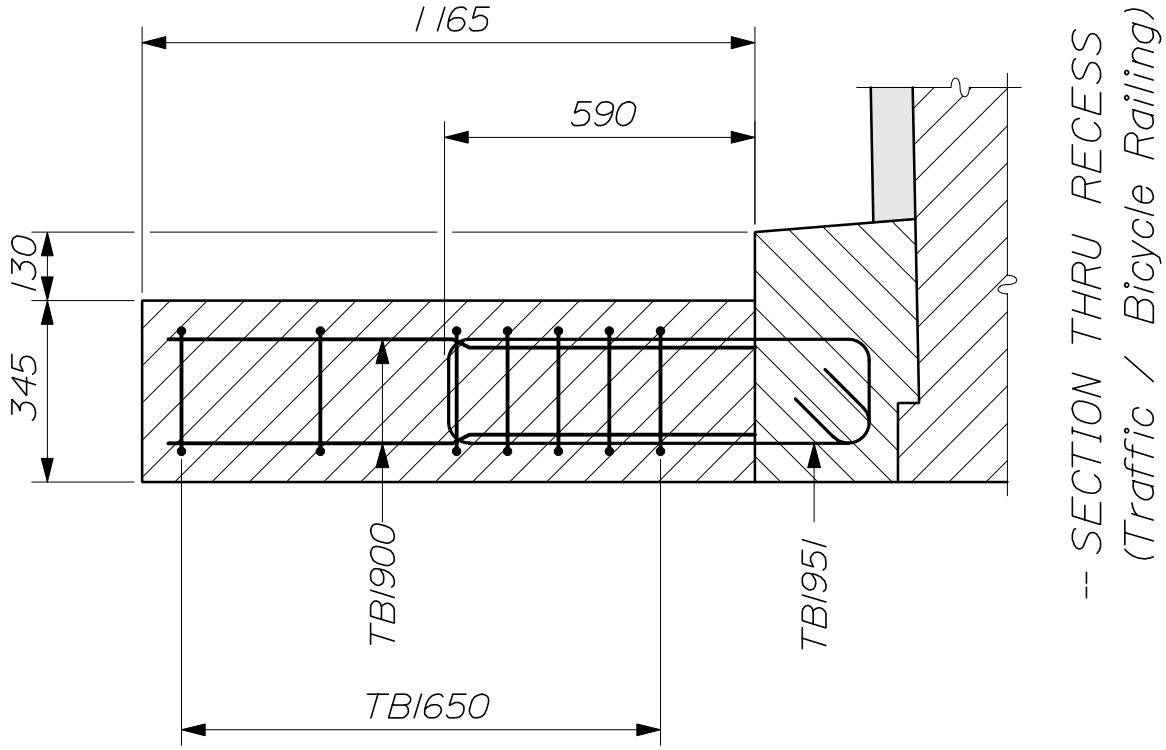

CONCRETE TRANSITION BARRIER

526(31)

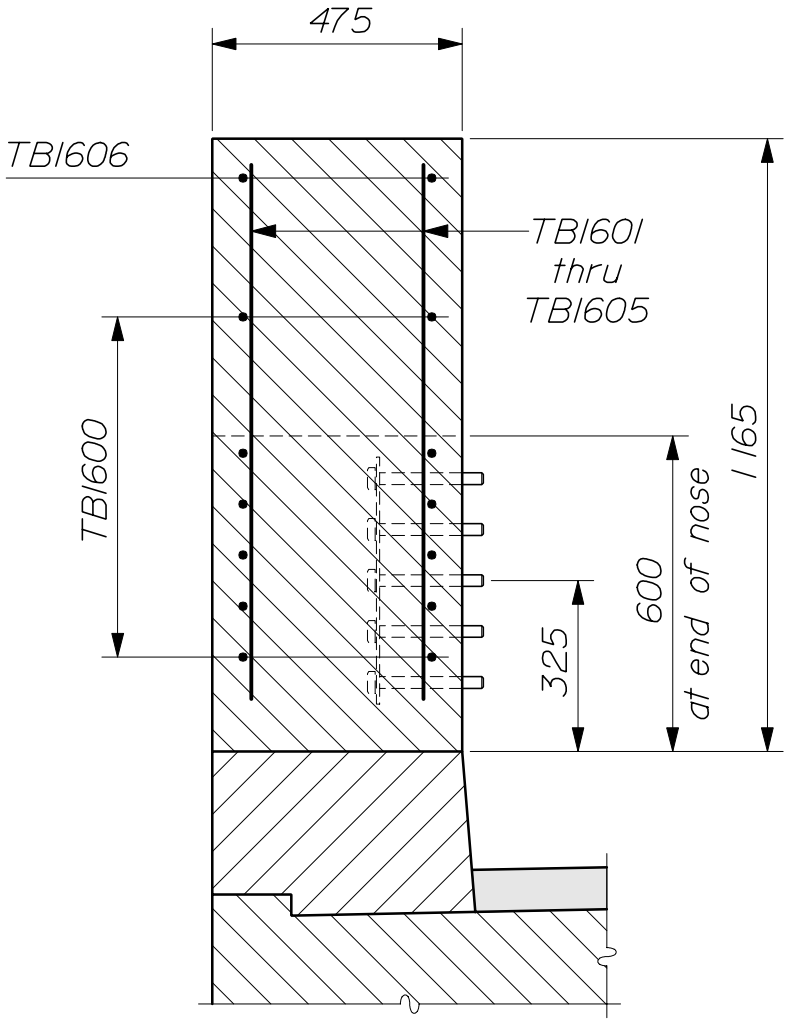

-- SECTION THRU NOSE --
(Traffic / Bicycle Railing)

CONCRETE TRANSITION BARRIER

526(32)

REINFORCING STEEL SCHEDULE						
Bar Mark	Traffic		Traffic / Pedestrian		Traffic / Bicycle	
	Qty.	Length	Qty.	Length	Qty.	Length
TB1600	10	1350	12	1350	12	1350
TB1601	2	490	2	920	2	965
TB1602	2	480	2	860	2	860
TB1603	2	470	2	800	2	755
TB1604	2	460	2	740	2	650
TB1605	2	450	2	680	2	545
TB1606	--	--	2	1400	2	1525
TB1650	5	3030	7	3030	7	3030
TB1900	--	--	4	1040	4	1145
TB1950	--	--	5	2175	5	2325
TB1951	2	2300	5	2300	5	2300
TB1952	2	2570	5	2570	5	2570

Note: The first two digits following the letters of the mark indicate the size of the reinforcing bar. (TB1600 = bar size #16.) All dimensions are out - to - out of bar.

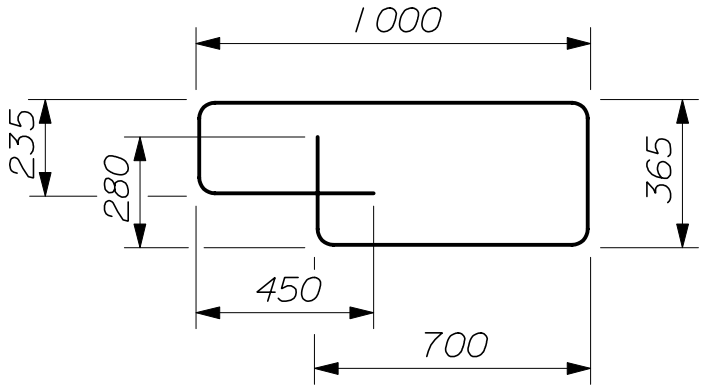

-- TB1650 --

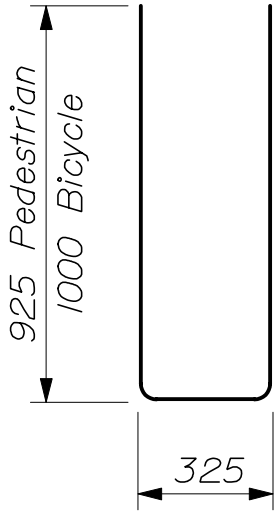

-- TB1950 --

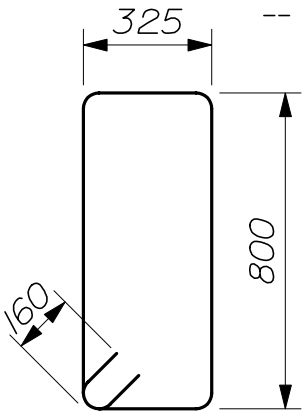

-- TB1952 --

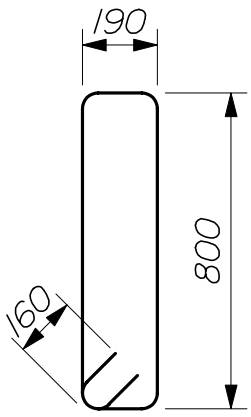

-- TB1951 --

CONCRETE TRANSITION BARRIER

526(33)

NOTES:

1. All work and materials shall conform to the provisions of Standard Specifications Section 526 - Concrete Barrier (Permanent Concrete Transition Barrier).

2. Reinforcing bars designated TB1951 and TB1952 are to be placed when the curb or sidewalk is placed. It is the Contractors responsibility to place these items at the proper time. Compensation for these bars will not be made separately and is considered to be paid for under item 526.34, Permanent Concrete Transition Barrier.

3. Reinforcing steel shall have 50 mm minimum concrete cover.

4. The quantities of reinforcing bars shown are for one transition barrier only.

5. When the Concrete Transition Barrier is cantilevered over an expansion joint, the nose shall be blocked out as shown.

6. Payment for guardrail anchorage will be considered incidental to the transition barrier pay item. Class 8.8.3 bolts shall be used when corrosion - resistant steel guardrail is specified on the approach roadway

7. The precast concrete transition curb shall meet the provisions of Section 609 - Curb, of the Standard Specifications. The bridge end of the curb shall be saw - cut in the field to fit flush against the backwall, as dictated by the bridge skew angle and the profile grade. Where curbing is specified on the adjacent highway, the transition shall be modified accordingly. Payment for transition curb will be considered incidental to the Concrete Transition Barrier pay item.

8. Concrete Transition Barrier is designed for attachment of Bridge Transition Type "1" unless otherwise indicated on the Design Drawings. Refer to Section 606 for details.

9. After installation of the guardrail is complete, upset the threads on the anchor bolts in three (3) places around each bolt, at the junction of the nut and the exposed thread, with a center punch or similar tool.

10. If there is a conflict between these Standard Details and the Design Drawings, the requirements of the Design Drawings shall be followed.

MATERIALS:

Concrete	Class "LP"
Reinforcing Steel	ASTM A615/A615M, Grade 420
Spacer plate	AASHTO M 183M/M 183 (ASTM A 36/A 36M) (Galvanized)
Bolts	ASTM F 568, Class 8.8 (Galvanized)

CONCRETE TRANSITION BARRIER

526(34)

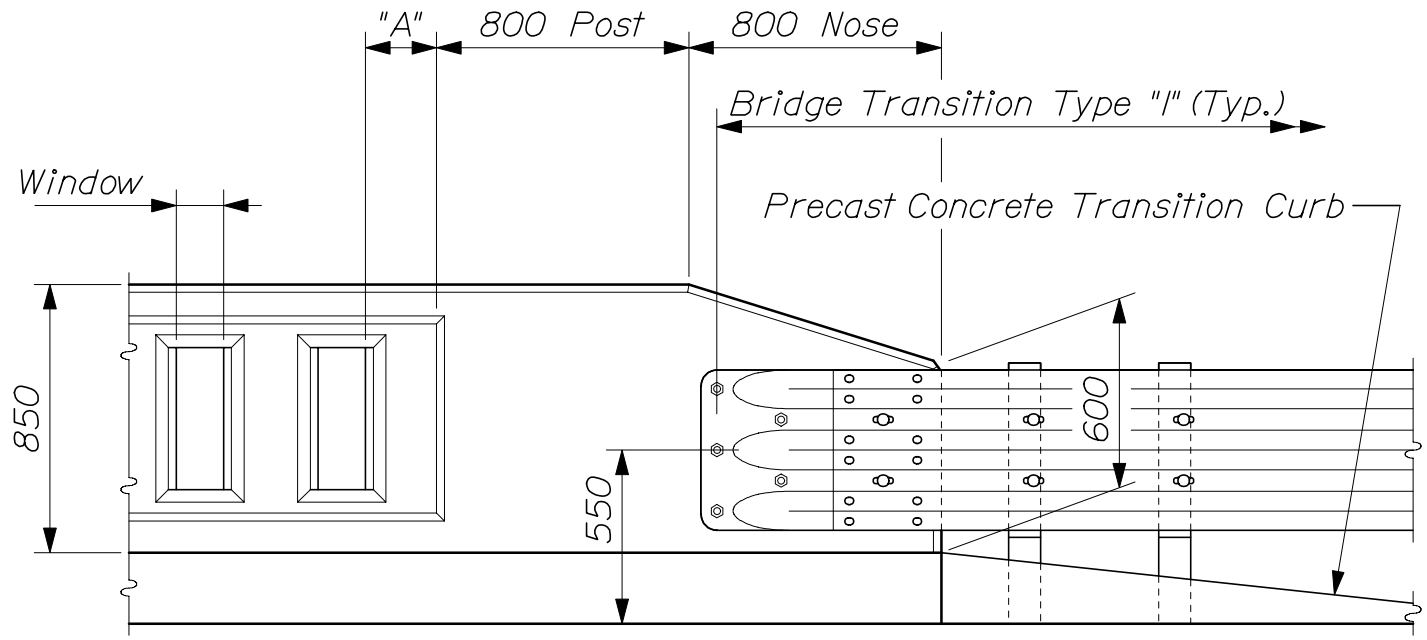

Dim. "A" = 150 min., 375 max.

-- TRAFFIC RAIL END ELEVATION --
(Typical)

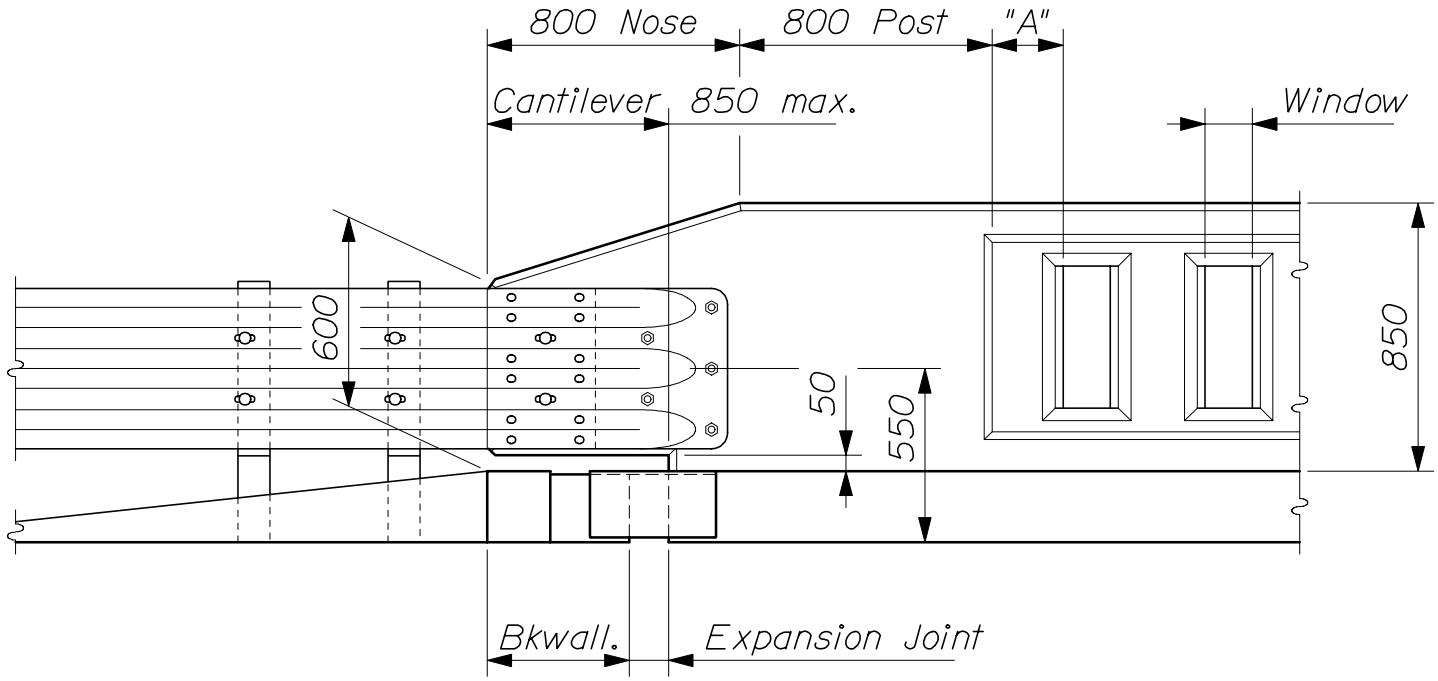

-- TRAFFIC RAIL END ELEVATION --
(Cantilevered)

# TEXAS CLASSIC RAIL
526(35)

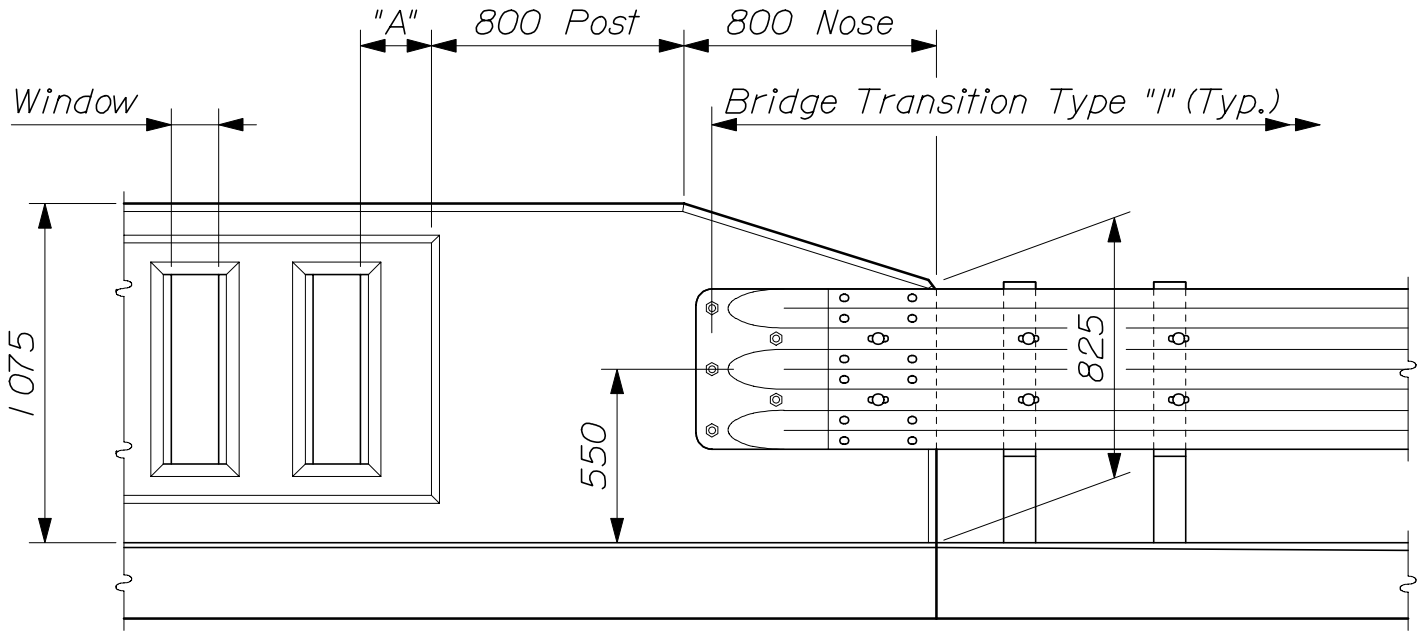

Dim. "A" = 150 min., 375 max.

-- SIDEWALK RAIL END ELEVATION --
(Typical)

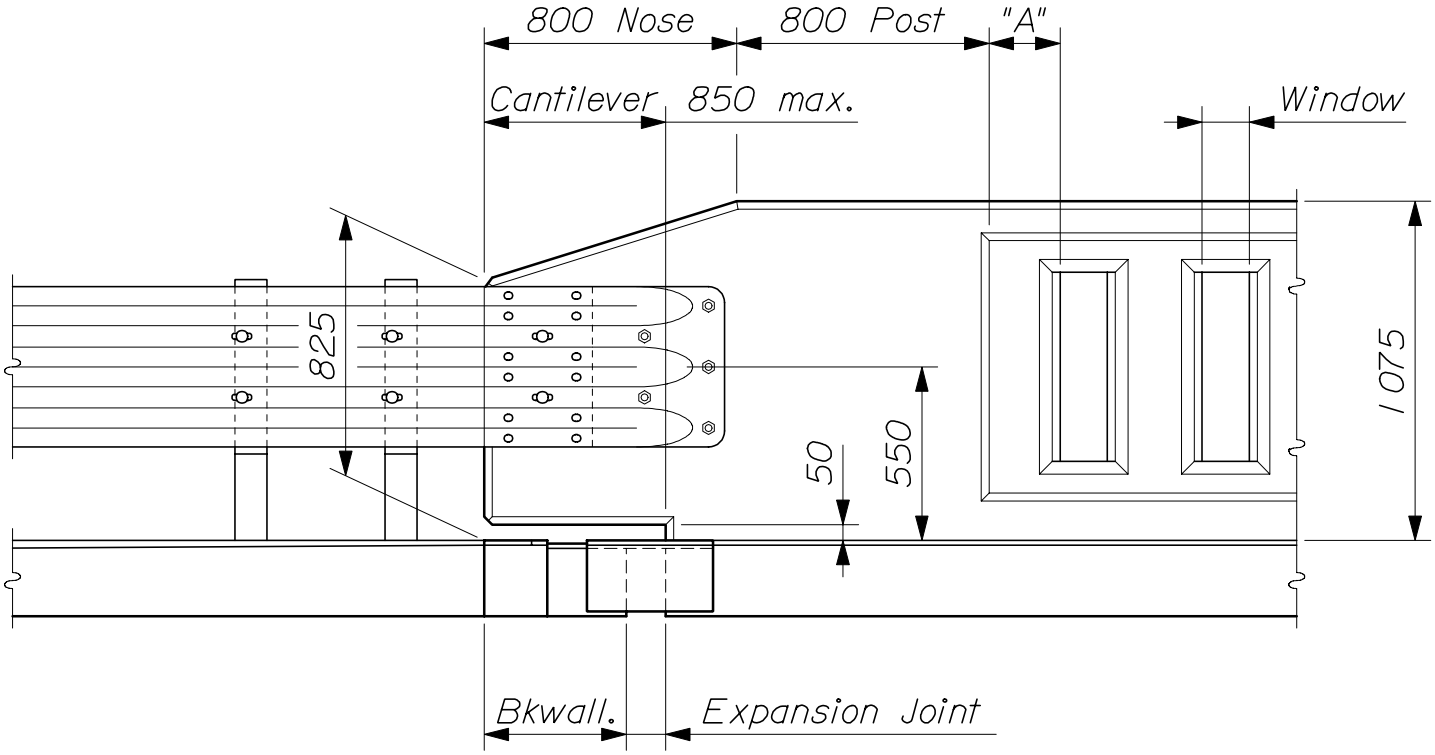

-- SIDEWALK RAIL END ELEVATION --
(Cantilevered)

TEXAS CLASSIC RAIL

526(36)

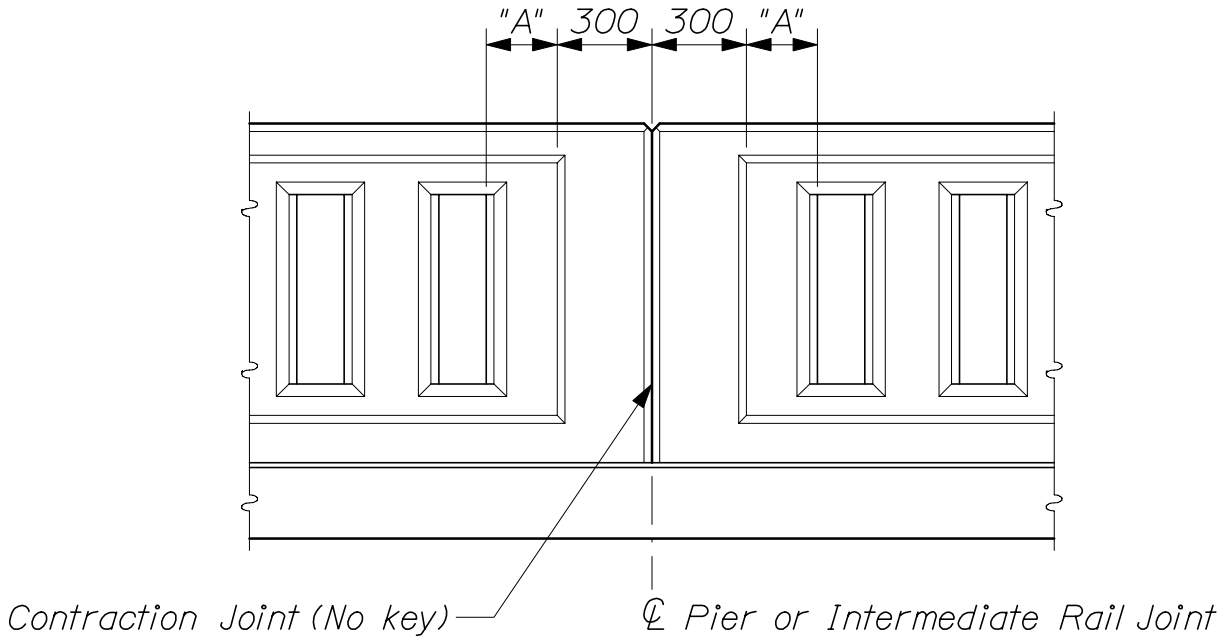

-- CONTRACTION JOINT ELEVATION --
(Sidewalk Rail shown)

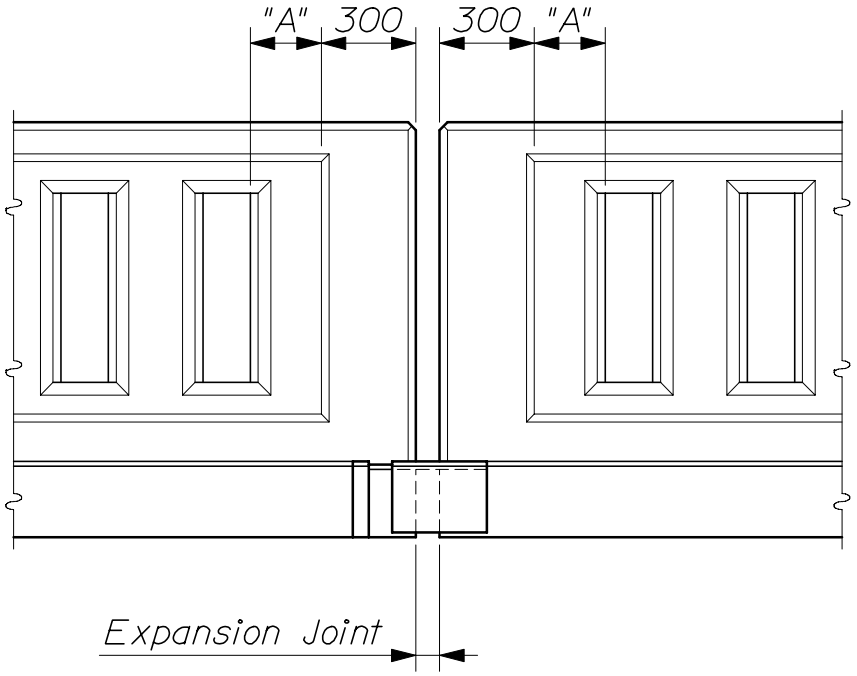

-- EXPANSION JOINT ELEVATION --
(Sidewalk Rail shown)

TEXAS CLASSIC RAIL

526(37)

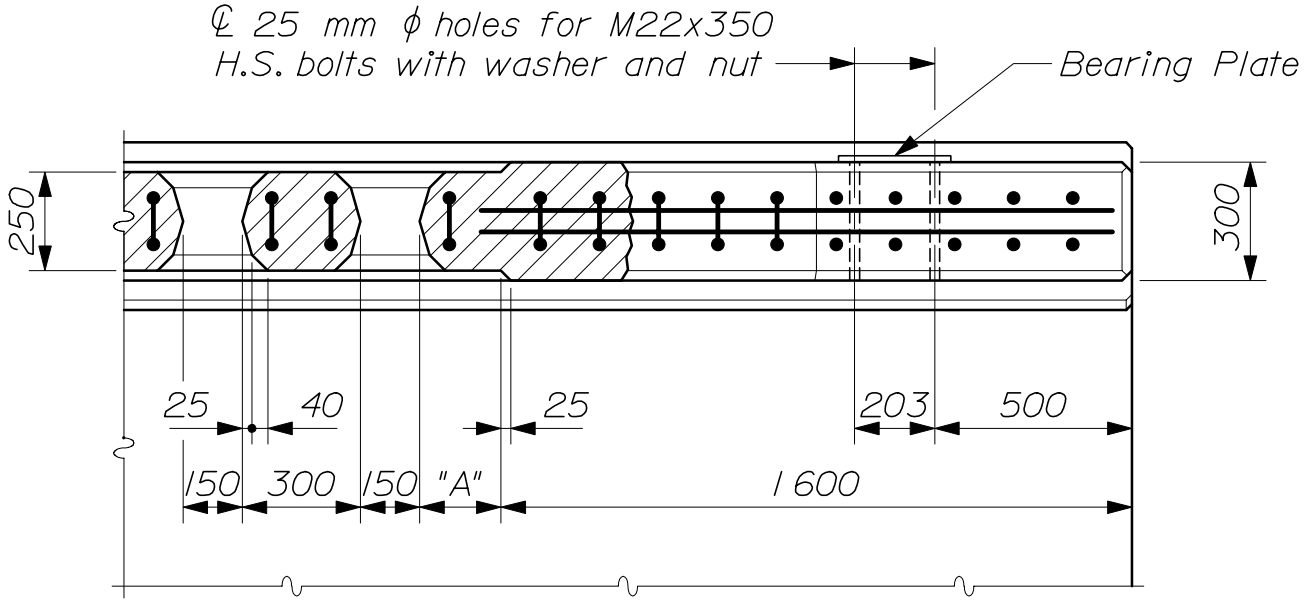

-- TRAFFIC RAIL PLAN --

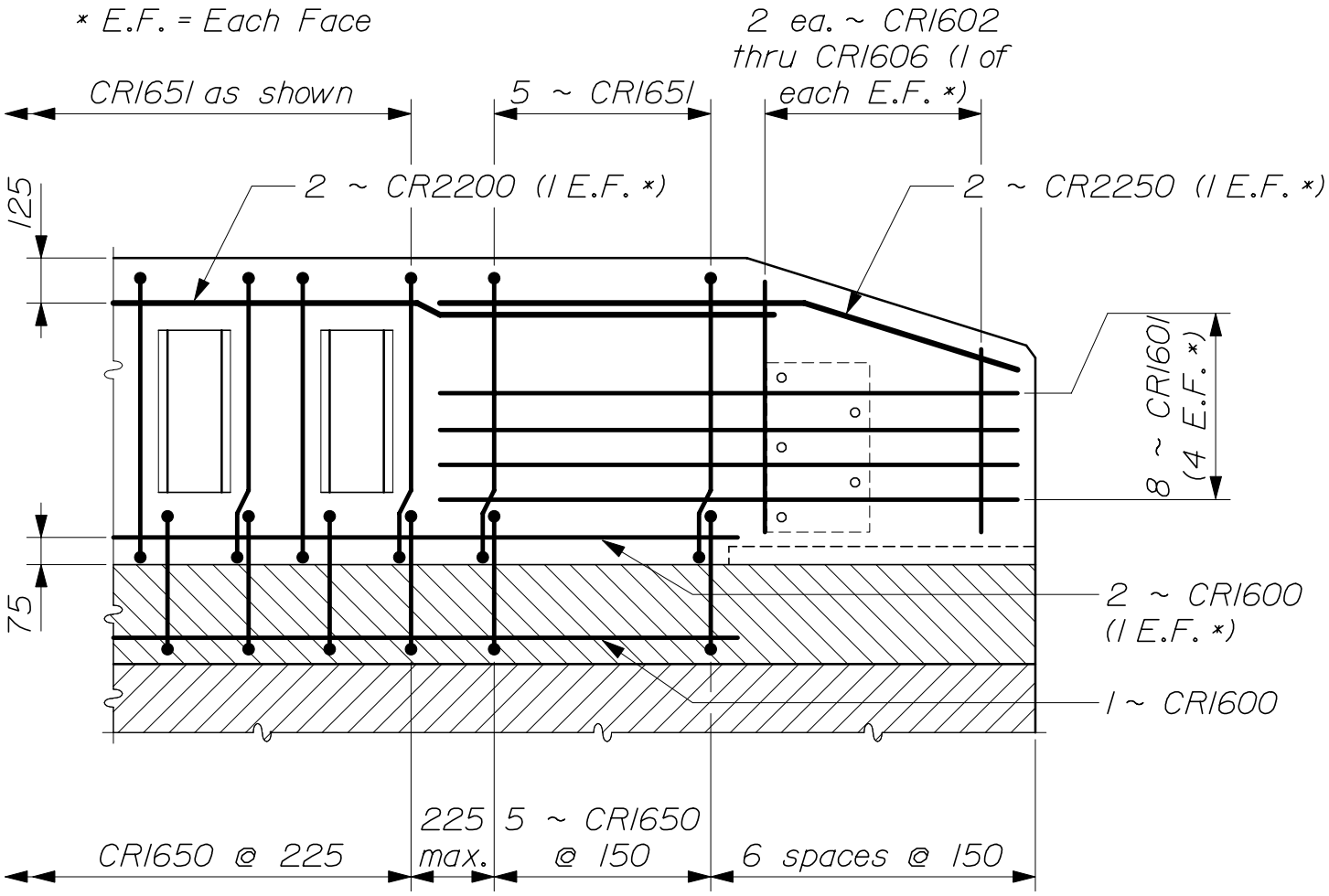

-- TRAFFIC RAIL ELEVATION --

TEXAS CLASSIC RAIL

526(38)

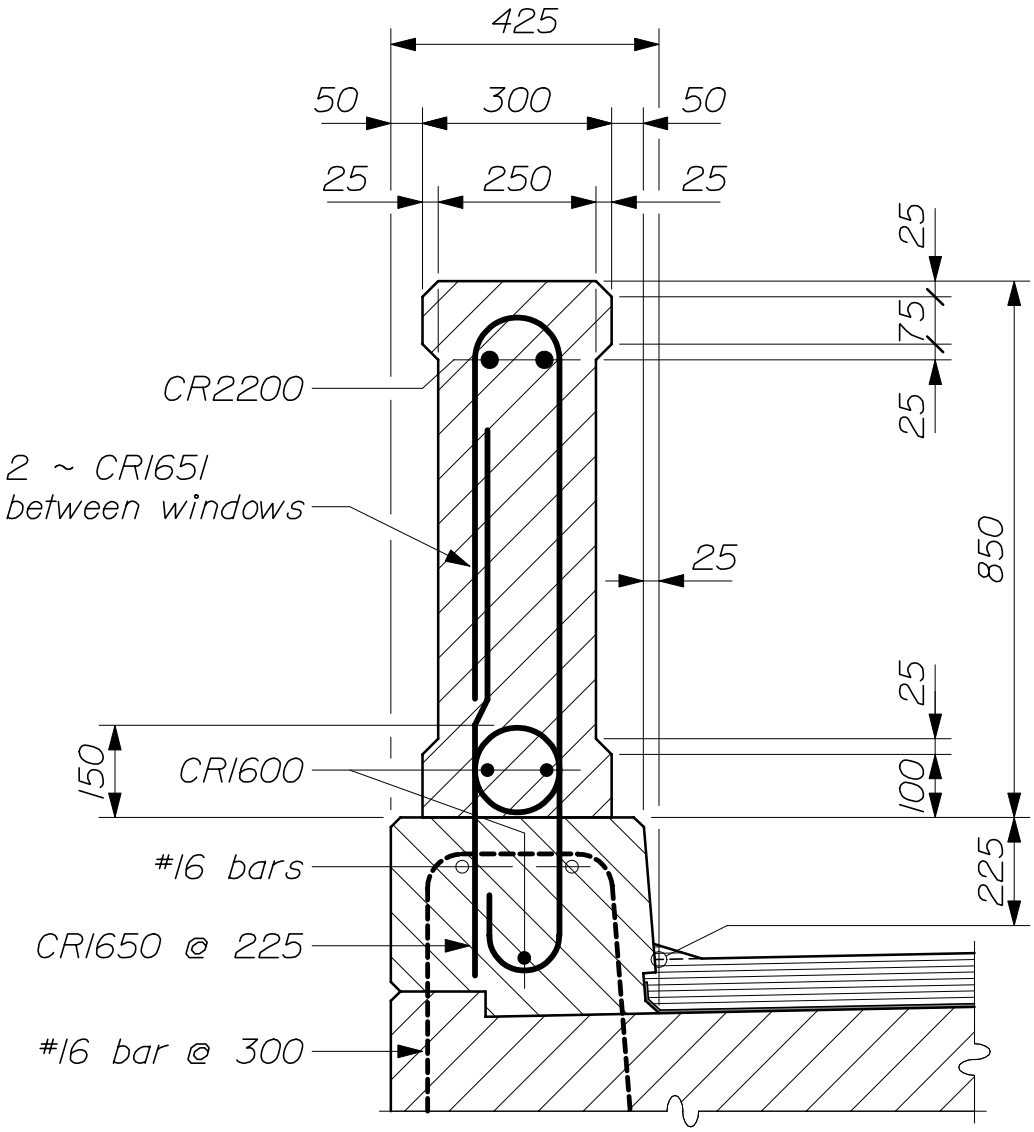

-- SECTION BETWEEN WINDOWS --
(Traffic Rail)

TEXAS CLASSIC RAIL

526(39)

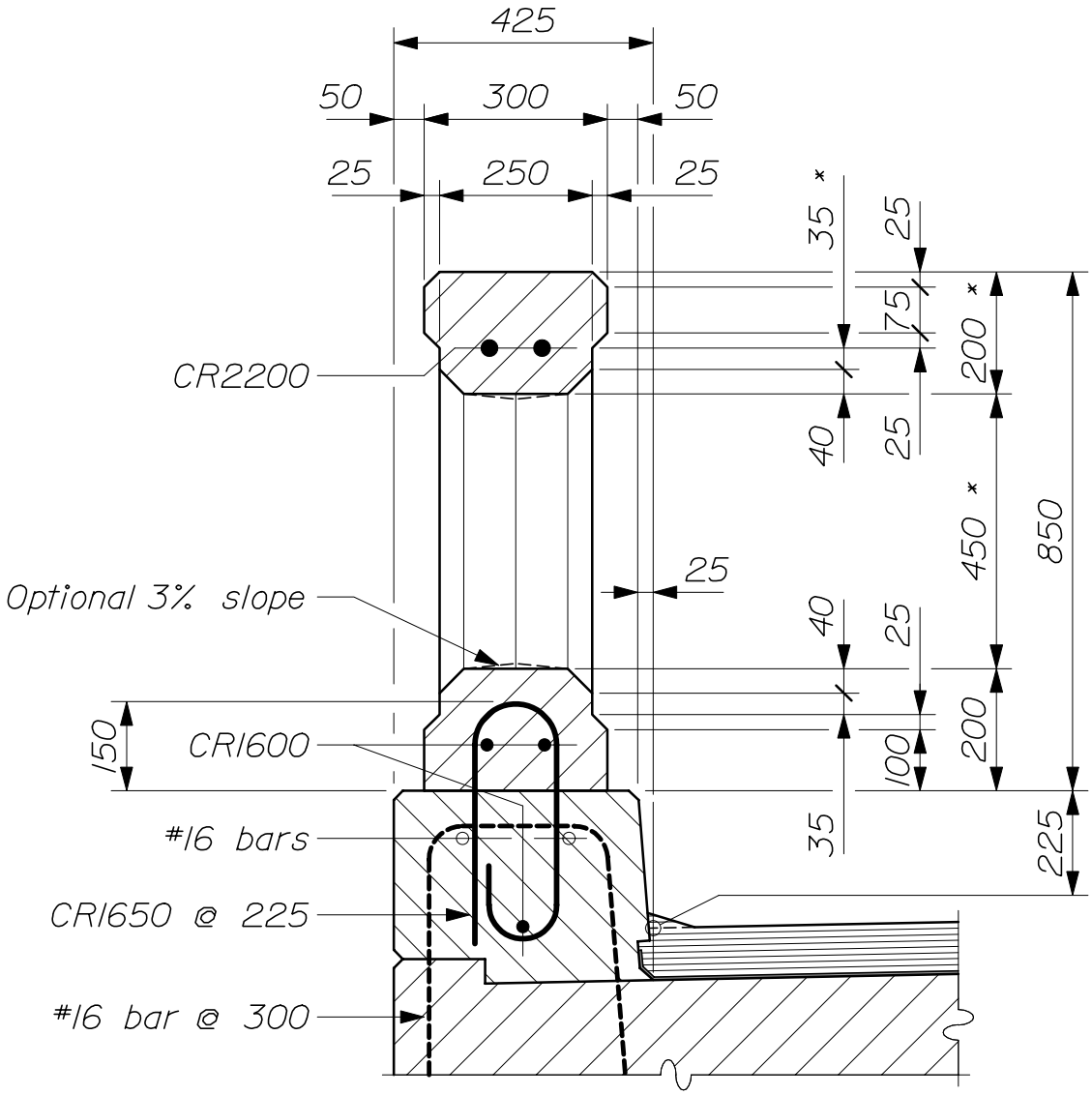

-- SECTION THROUGH WINDOW --
(Traffic Rail)

* Alter these dimensions if necessary to accommodate prefabricated window forms using Imperial units.

TEXAS CLASSIC RAIL

526(40)

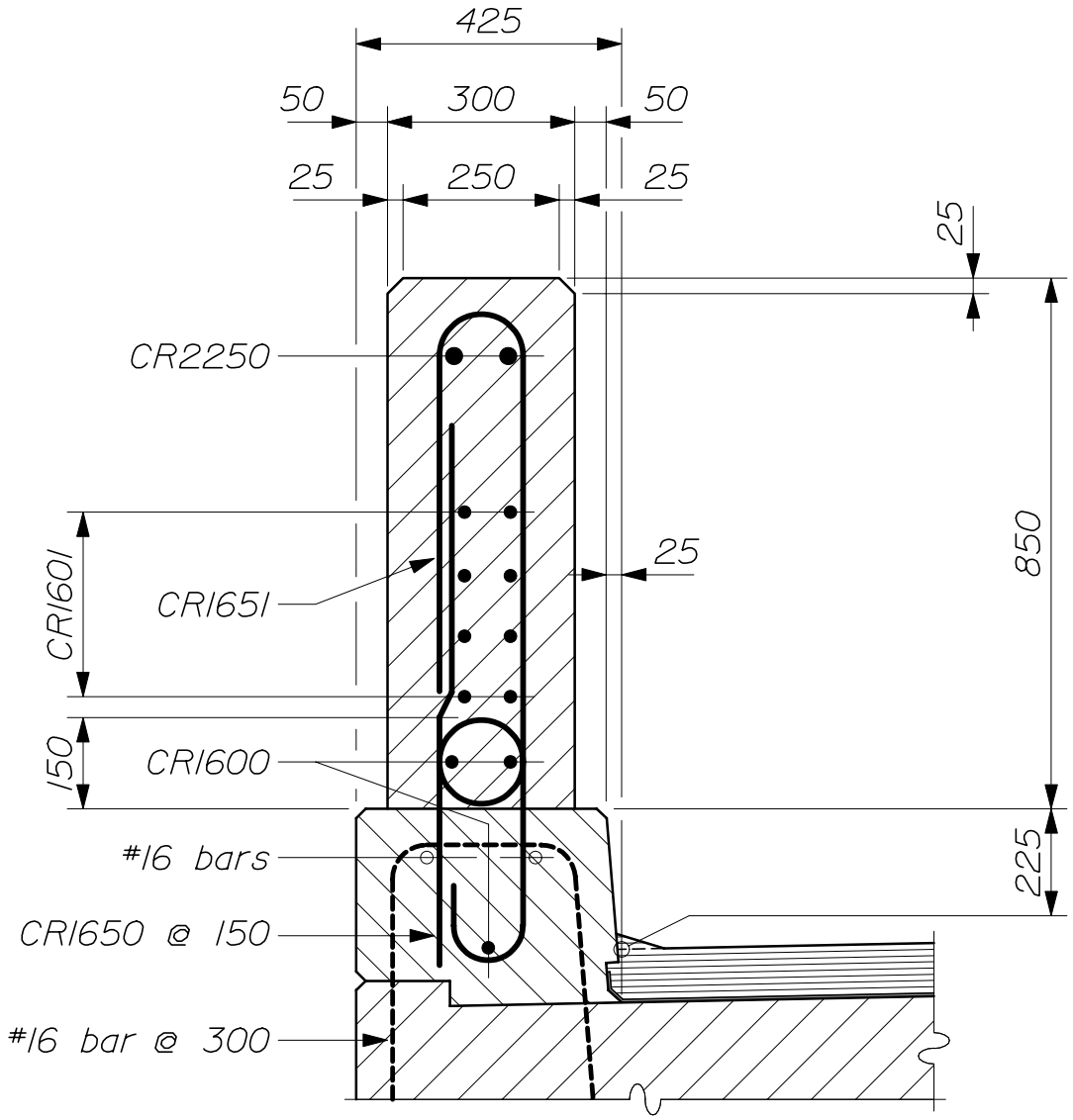

-- SECTION THROUGH POST --
(Traffic Rail)

TEXAS CLASSIC RAIL

526(41)

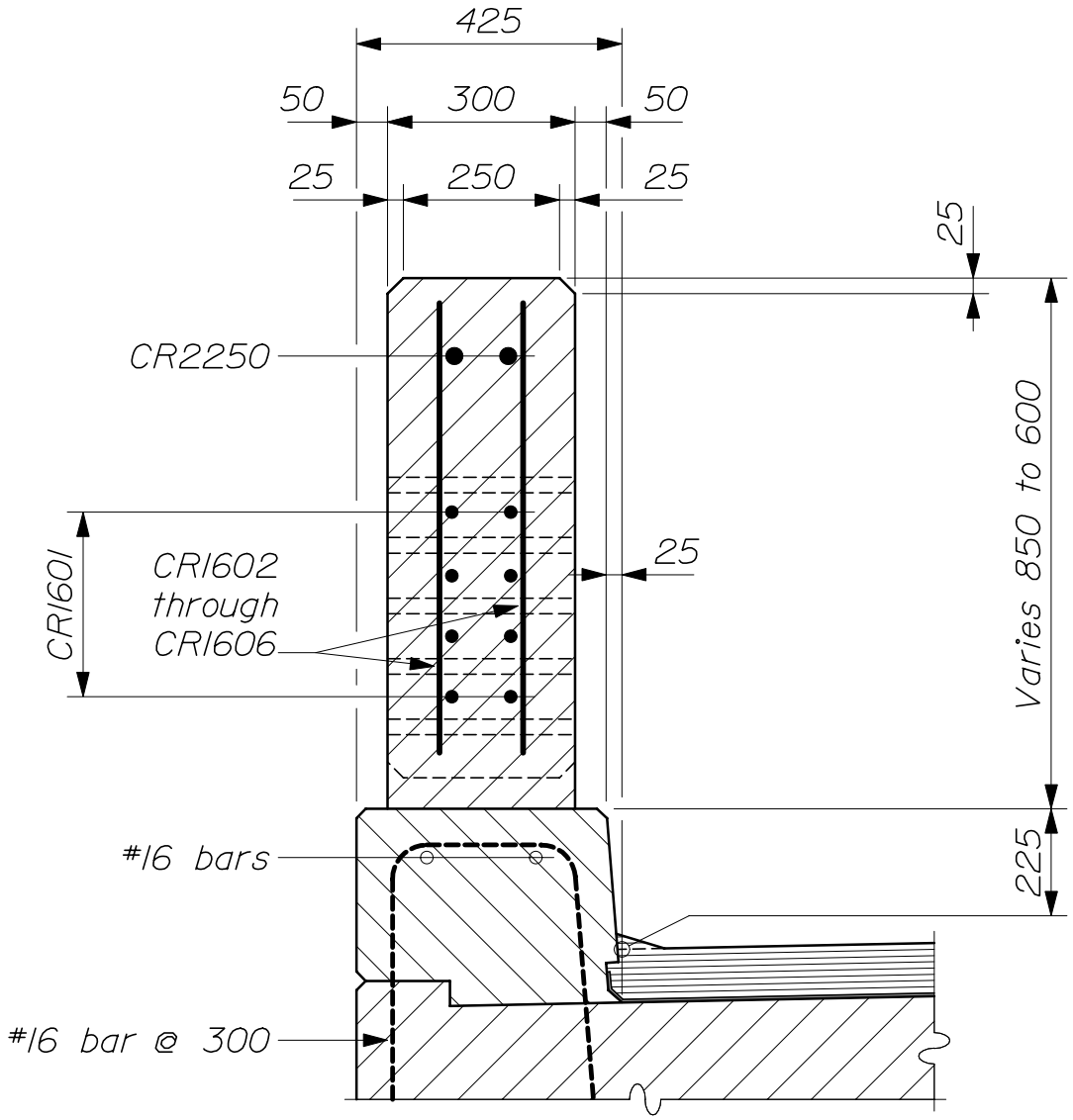

-- SECTION THROUGH NOSE --
(Traffic Rail)

TEXAS CLASSIC RAIL

526(42)

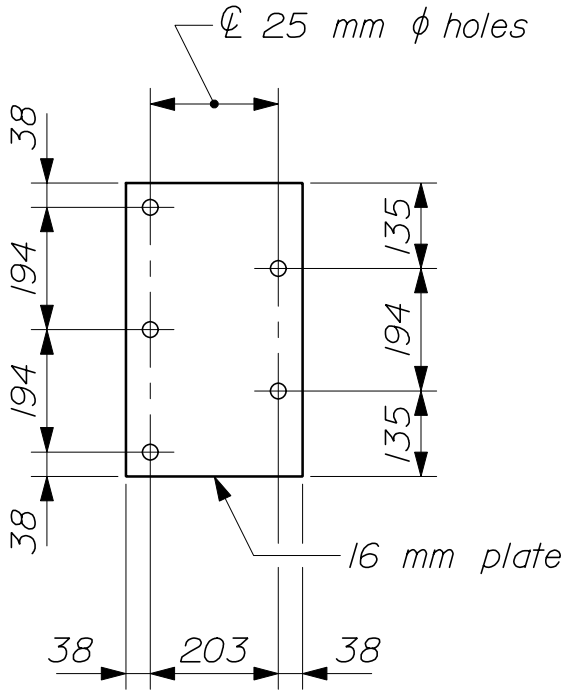

-- BEARING PLATE --

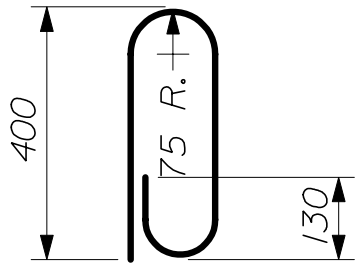

-- CR1650 --

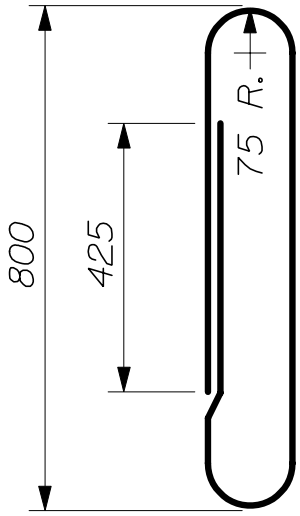

-- CR1651 --

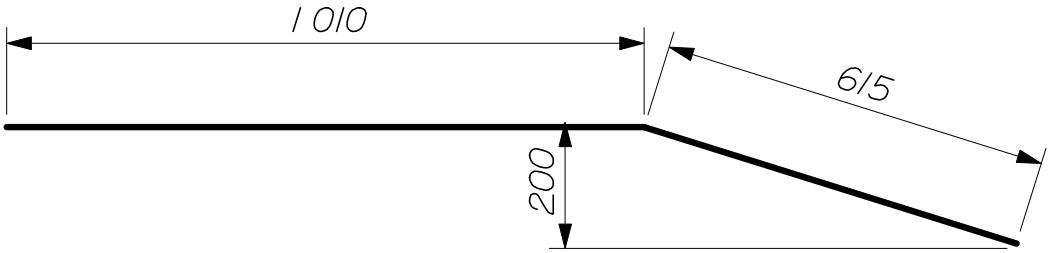

-- CR2250 --

TRAFFIC RAIL REINFORCING STEEL SCHEDULE		
Mark	Length	Location
CR1600	9 150 max.	Rail Bottom & Curb (Horizontal)
CR1601	1 600	Nose/Post (Horizontal)
CR1602	700	Nose (Vertical)
CR1603	650	Nose (Vertical)
CR1604	600	Nose (Vertical)
CR1605	550	Nose (Vertical)
CR1606	500	Nose (Vertical)
CR1650	1 100	Rail & Post (Vertical)
CR1651	2 200	Rail & Post (Vertical)
CR2200	9 150 max.	Rail Top (Horizontal)
CR2250	1 625	Nose (Horizontal)

TEXAS CLASSIC RAIL

526(43)

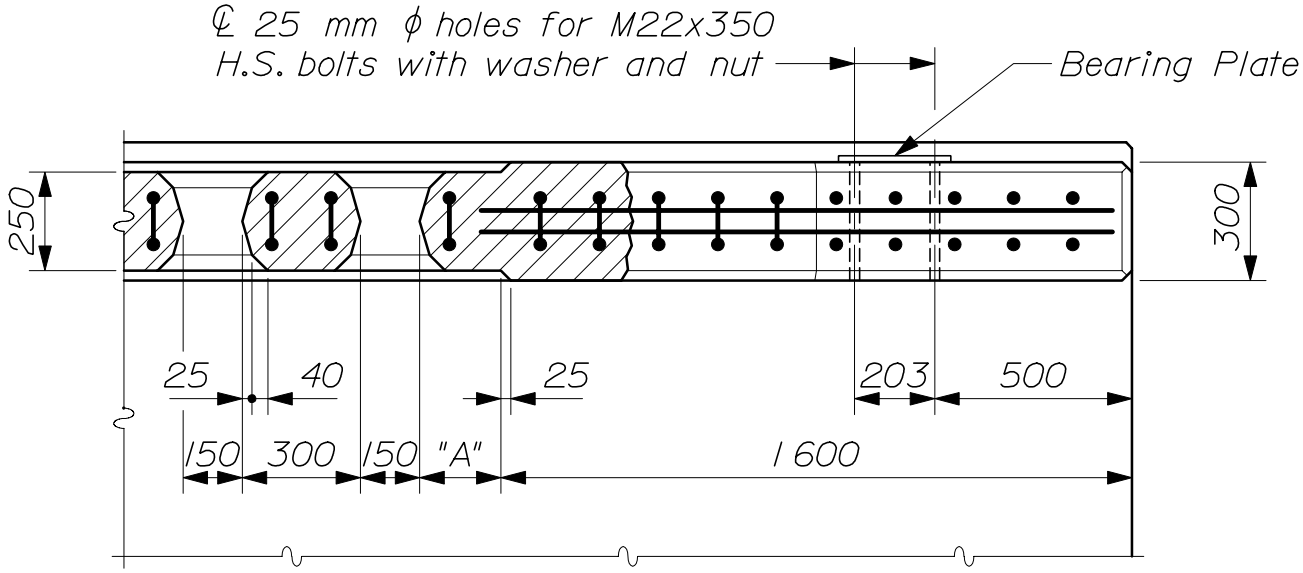

-- SIDEWALK RAIL PLAN --

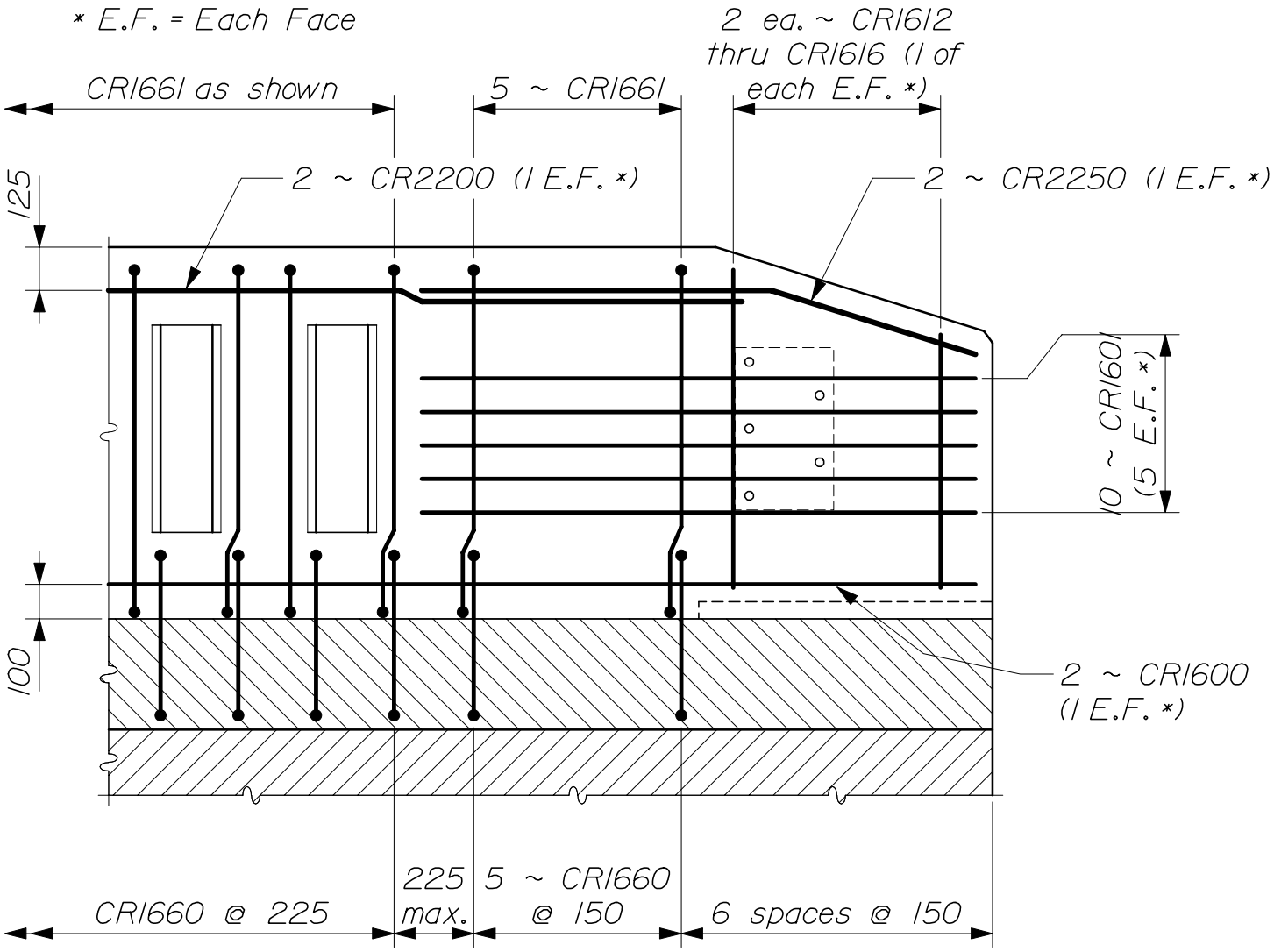

-- SIDEWALK RAIL ELEVATION --

TEXAS CLASSIC RAIL

526(44)

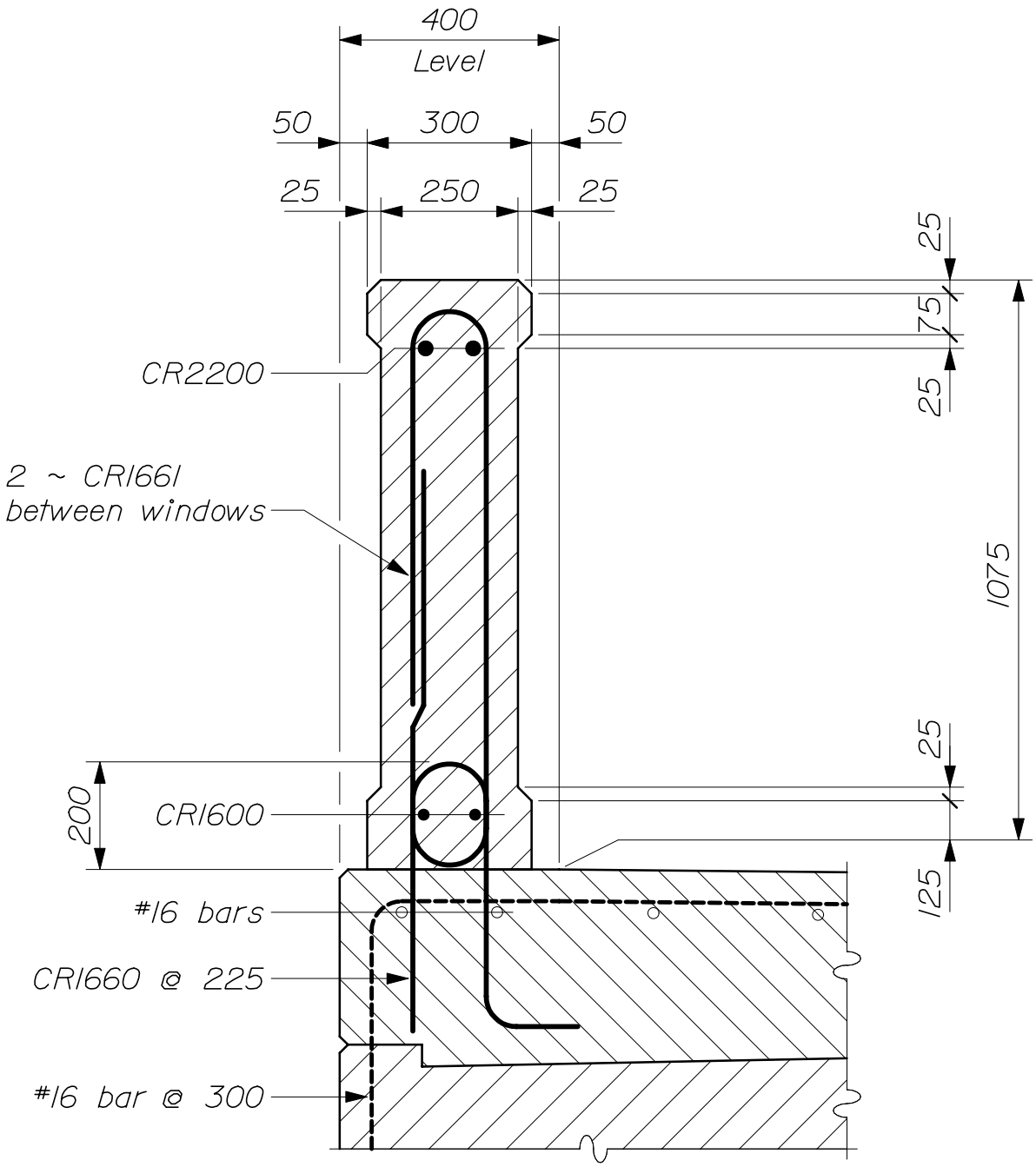

-- SECTION BETWEEN WINDOWS --
(Sidewalk Rail)

TEXAS CLASSIC RAIL

526(45)

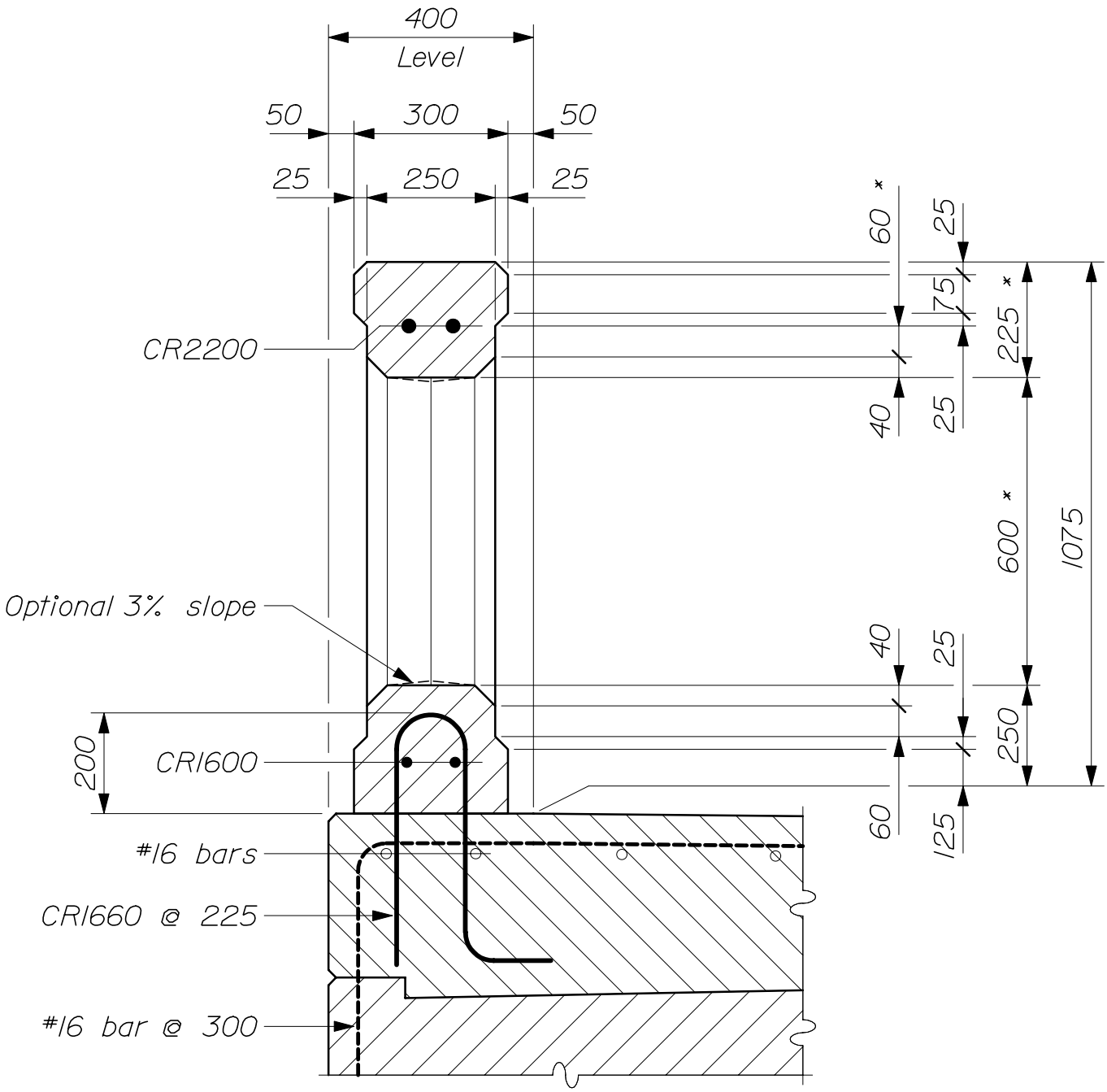

-- SECTION THROUGH WINDOW --
(Sidewalk Rail)

* Alter these dimensions if necessary to accommodate prefabricated window forms using Imperial units.

TEXAS CLASSIC RAIL

526(46)

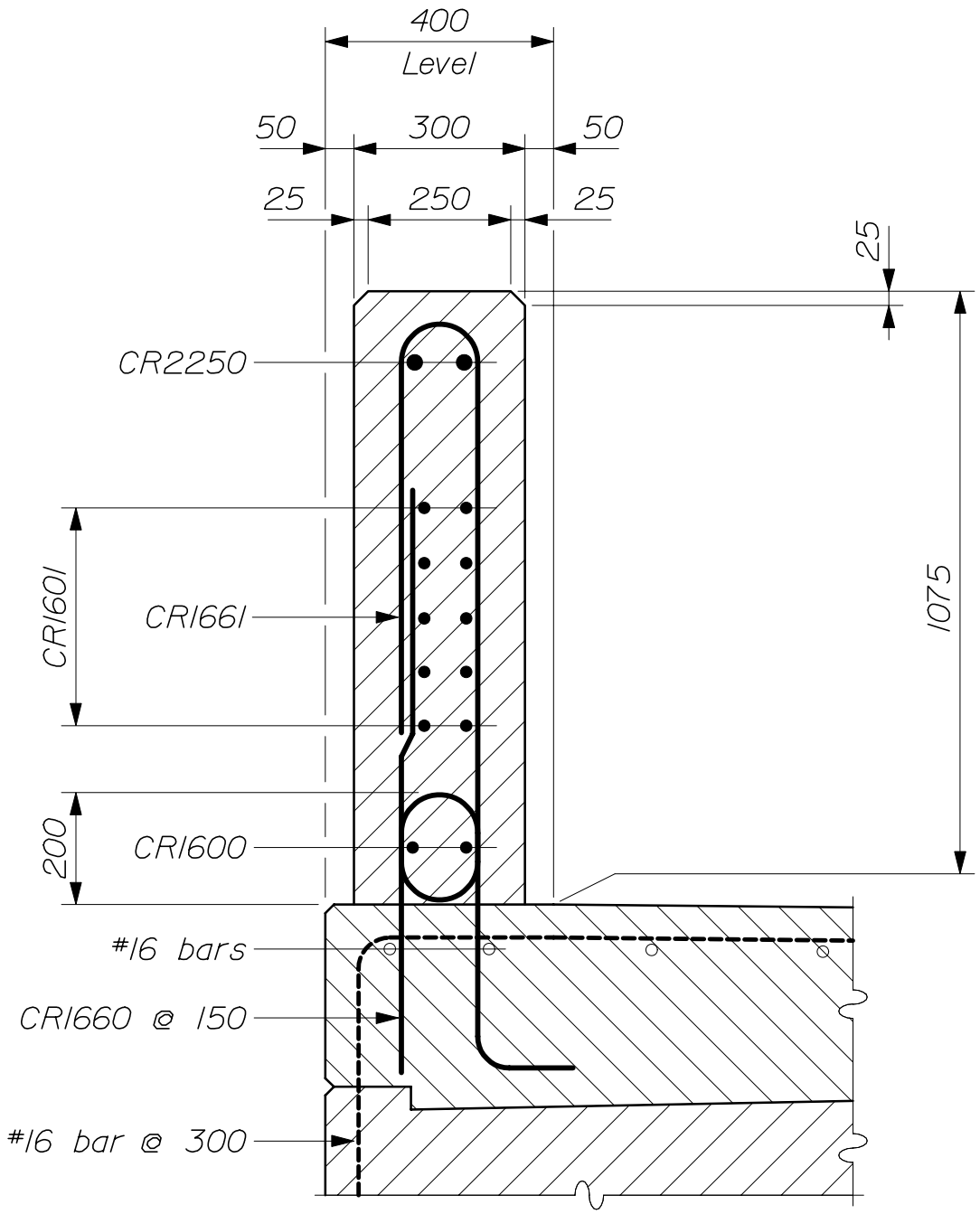

-- SECTION THROUGH POST --
(Sidewalk Rail)

TEXAS CLASSIC RAIL

526(47)

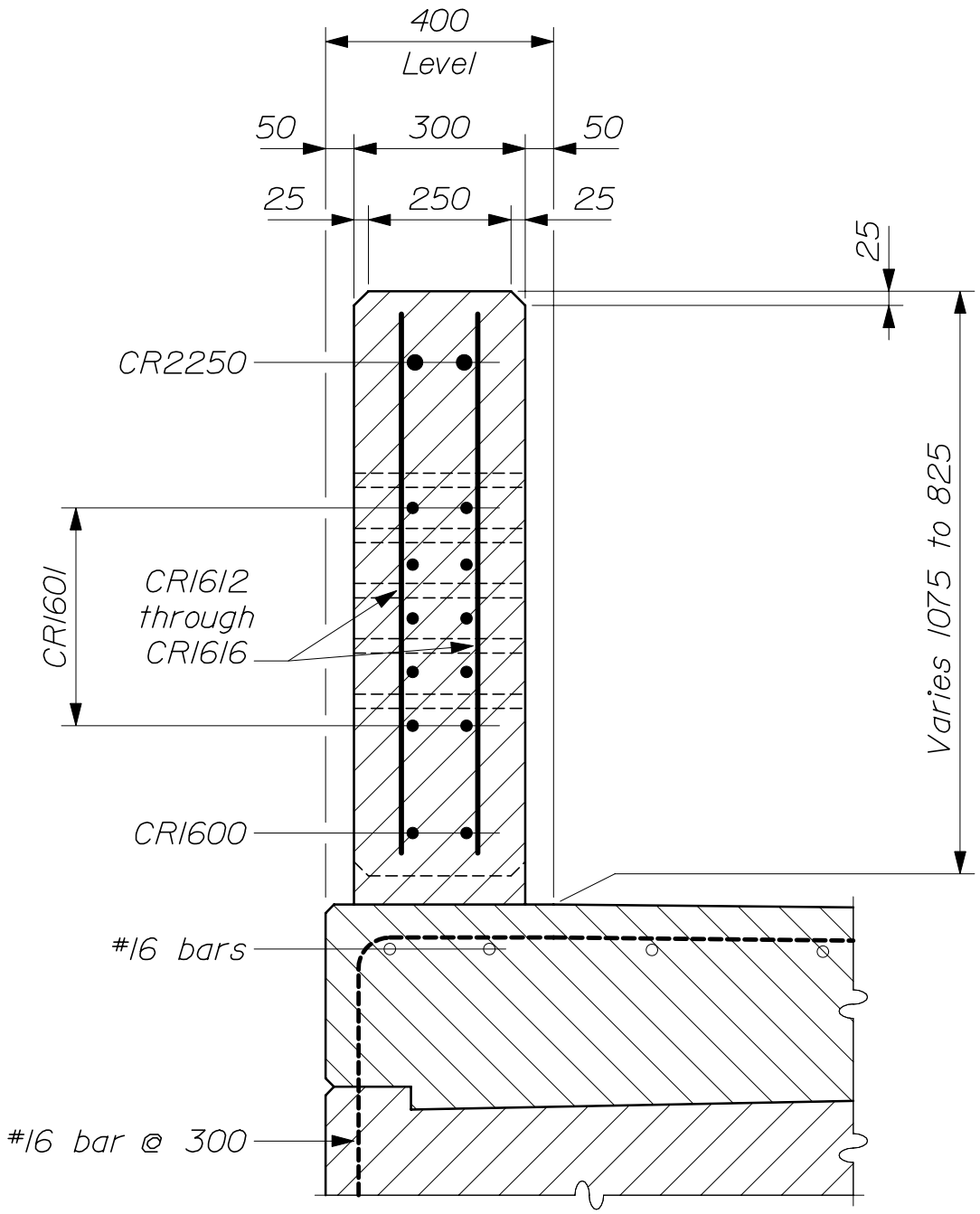

-- SECTION THROUGH NOSE --
(Sidewalk Rail)

TEXAS CLASSIC RAIL

526(48)

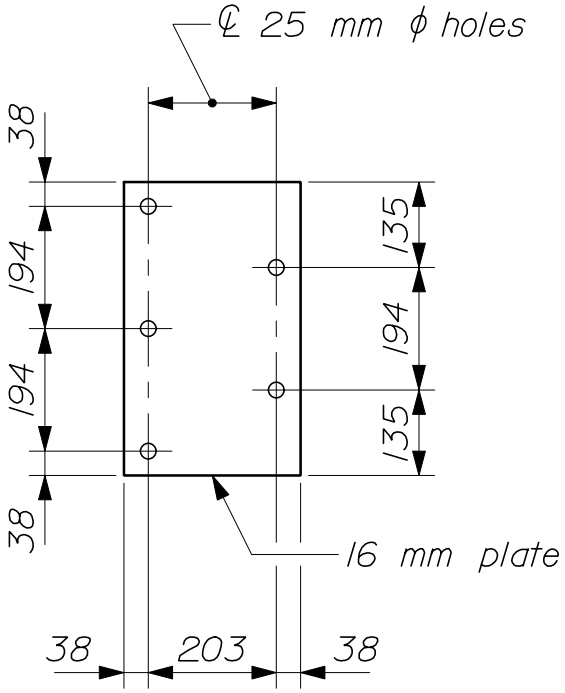

-- BEARING PLATE --

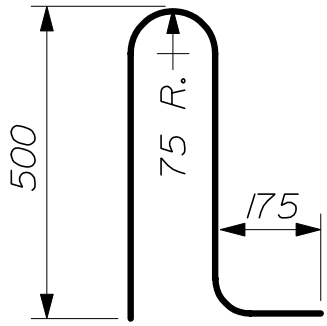

-- CR1660 --

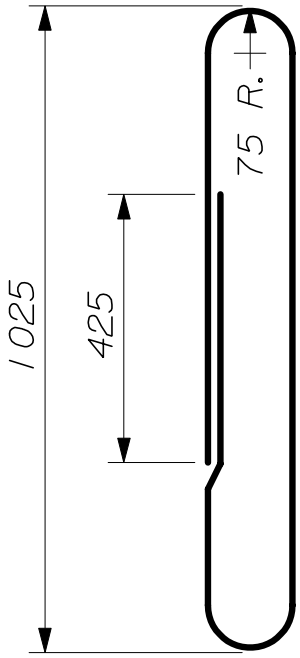

-- CR1661 --

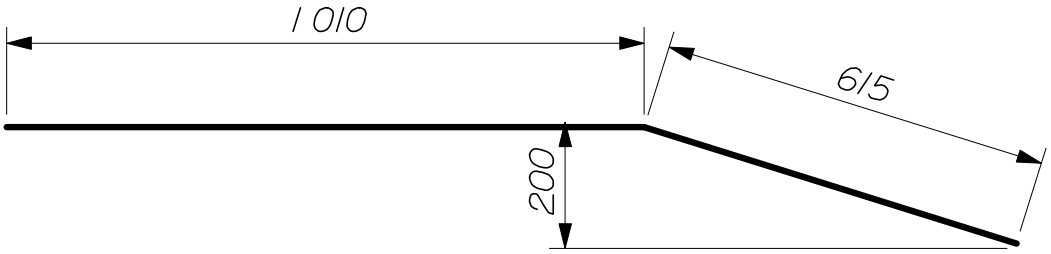

-- CR2250 --

SIDEWALK RAIL REINFORCING STEEL SCHEDULE		
Mark	Length	Location
CR1600	9 150 max.	Rail Bottom (Horizontal)
CR1601	1 600	Nose/Post (Horizontal)
CR1612	925	Nose (Vertical)
CR1613	875	Nose (Vertical)
CR1614	825	Nose (Vertical)
CR1615	775	Nose (Vertical)
CR1616	725	Nose (Vertical)
CR1660	1 200	Rail & Post (Vertical)
CR1661	2 650	Rail & Post (Vertical)
CR2200	9 150 max.	Rail Top (Horizontal)
CR2250	1 625	Nose (Horizontal)

TEXAS CLASSIC RAIL

526(49)

NOTES:

1. All work and materials shall conform to the requirements of Standard Specifications Section 526 - Concrete Barrier.

2. Vertical surfaces and recesses shall be plumb. Tops and bottoms of window openings may be level or parallel to the grade of the rail.

3. Dimension "A" shall be approximately equal at all locations in any length of railing.

4. Contraction joints shall be located over piers on continuous structures and at 10± m intervals along the length of all bridges. Do not extend reinforcing steel through the contraction joints.

5. Reinforcing steel shall have 50 mm minimum concrete cover.

6. The first digits following the letters of the bar mark indicate the size of the reinforcing bar. (CR1600 = bar size #16.) All dimensions are out - to - out of bar.

7. The minimum lap splice for CR1600 bars is 550 mm and for CR2200 bars is 925 mm.

8. When the end post is cantilevered over an expansion joint, provide a block - out as shown.

9. For details of curb / sidewalk expansion dams where necessary, refer to the Standard Detail for the appropriate Expansion Device.

10. Bolt holes in concrete shall be formed by a method approved by the Engineer.

11. Payment for anchor bolts and bearing plates will be considered incidental to theTexas Classic Rail pay item.

12. For details of the Concrete Transition Curb, refer to Standard Details Section 526, Concrete Transition Barrier. Payment for the transition curb will be considered incidental to the Texas Classic Rail pay item.

13. If there is a conflict between these Standard Details and the Design Drawings, the requirements of the Design Drawings shall be followed.

MATERIALS:

Concrete ---------- Class "LP"
Reinforcing Steel ---------- ASTM A 615/A 615M, Grade 420
Bearing Plate ------- AASHTO M 183M/M 183 (ASTM A 36/A 36M) (Galvanized)
Anchor Bolts ---------- ASTM F 568, Class 8.8 (Galvanized)

TEXAS CLASSIC RAIL

526(50)

KEY

950 — Plastic Crash Barrel

950 — Weight of sand in kilograms

20 & 25 MPH 650 650 950 650 950	50 MPH 100 100 200 325 325 650 650 950 325 650 650 950
30 & 35 MPH 325 650 650 950 650 650 950	55 MPH 100 100 100 200 325 325 650 650 950 325 650 650 950
40 MPH 200 325 650 650 950 650 650 950	60 & 65 MPH 100 100 100 100 200 325 200 325 650 650 950 200 325 650 650 950
45 MPH 100 200 325 325 650 650 950 325 650 650 950	

Maximum Deceleration = 6 - 7 G's

TEMPORARY IMPACT ATTENUATORS ARRAYS FOR SPEEDS OF 20 TO 65 MPH

Note -
Other arrangements are acceptable; arrangements other than those shown shall be approved by the Resident.

PORTABLE ENERGY ABSORPTION UNIT

527(01)

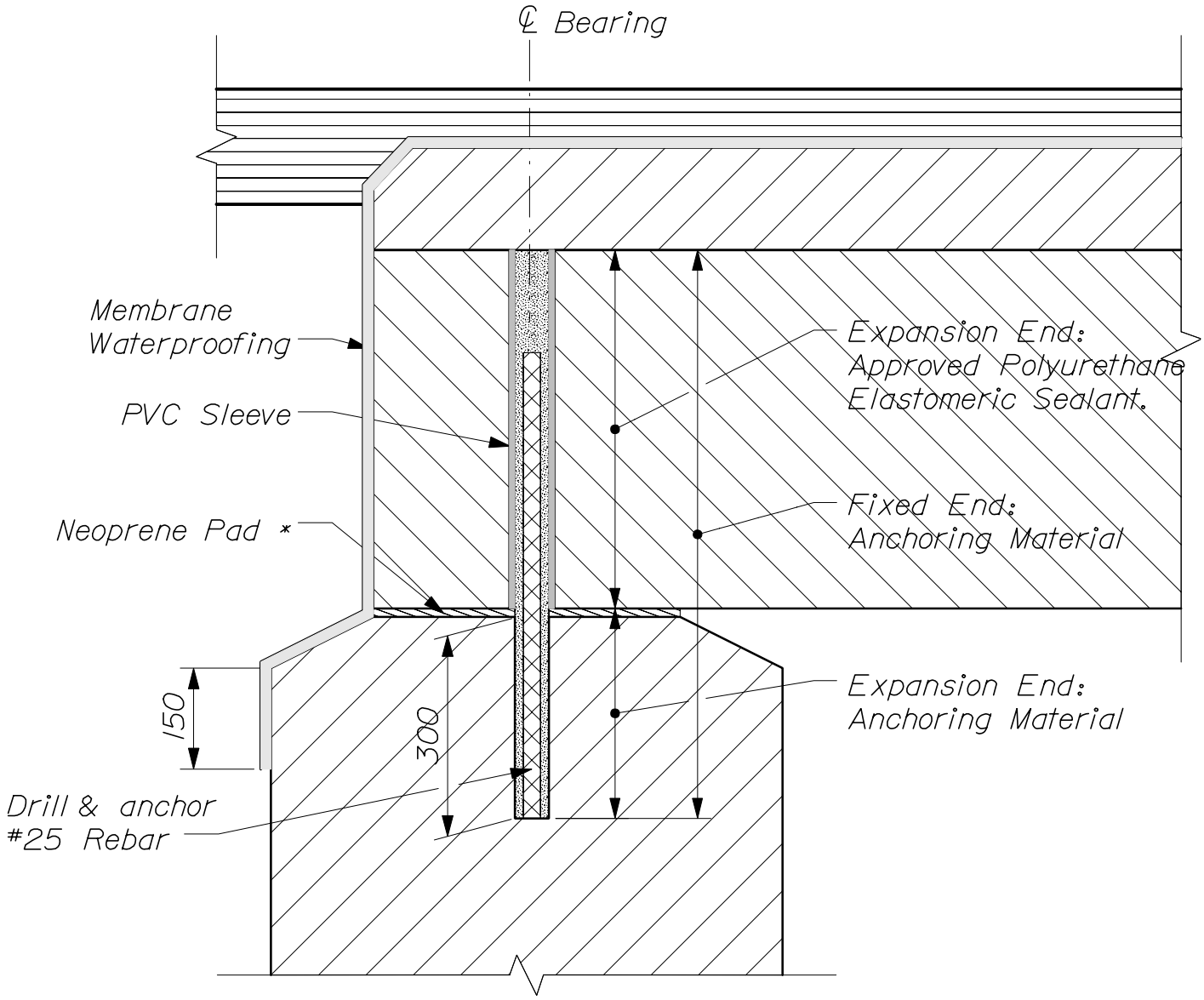

-- TYPICAL LONGITUDINAL SECTION --

* NOTE:
The Neoprene Pad thickness shall be 13 mm for solid or voided slabs and 25 mm for box beams. The pad shall be one piece 450 mm wide centered about the ℄ Bearing unless otherwise shown on the plans. Ends of individual pads shall be within 75 mm and parallel to the edge of the precast unit. As an option, the pad may cover the entire length of the bridge seat.

PRECAST SUPERSTRUCTURE

535(01)

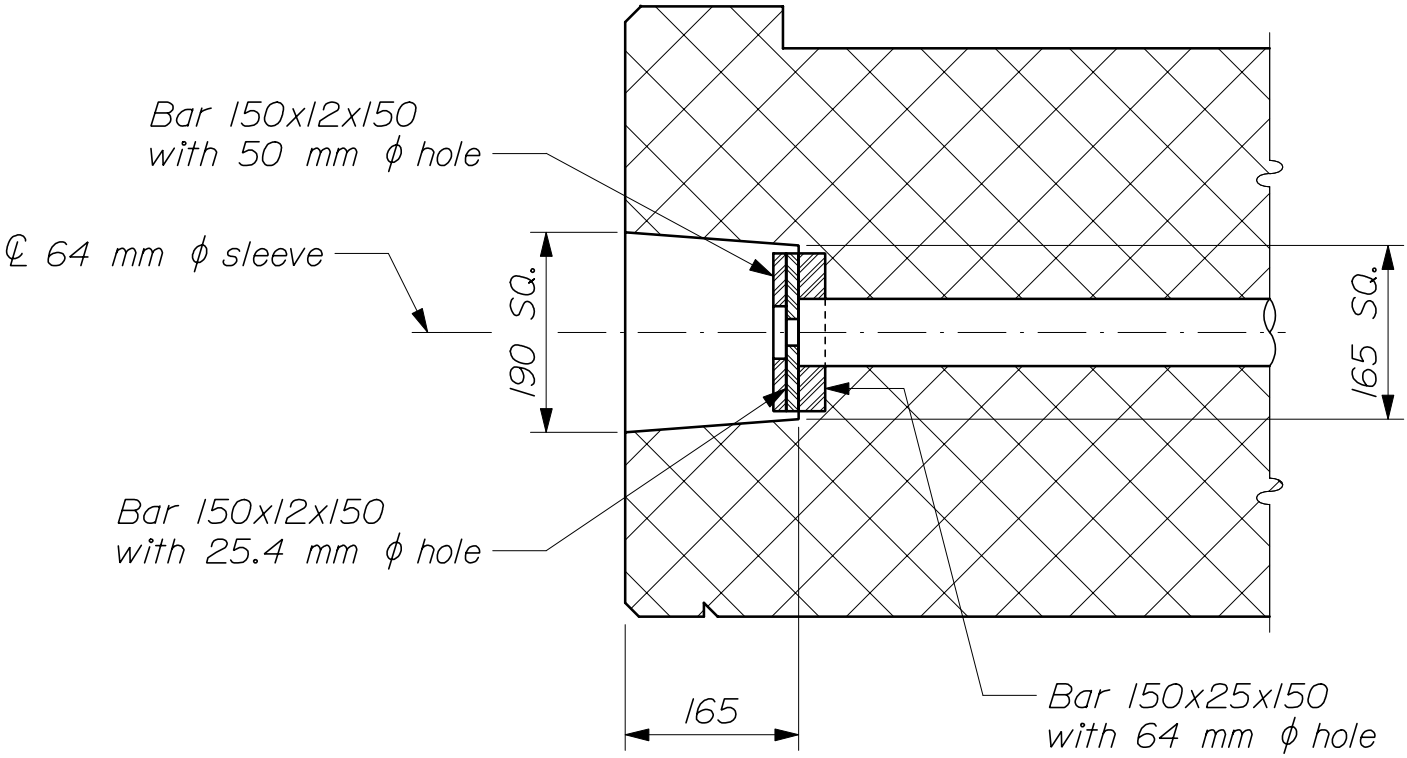

-- BLOCK - OUT & PLATE DETAIL --

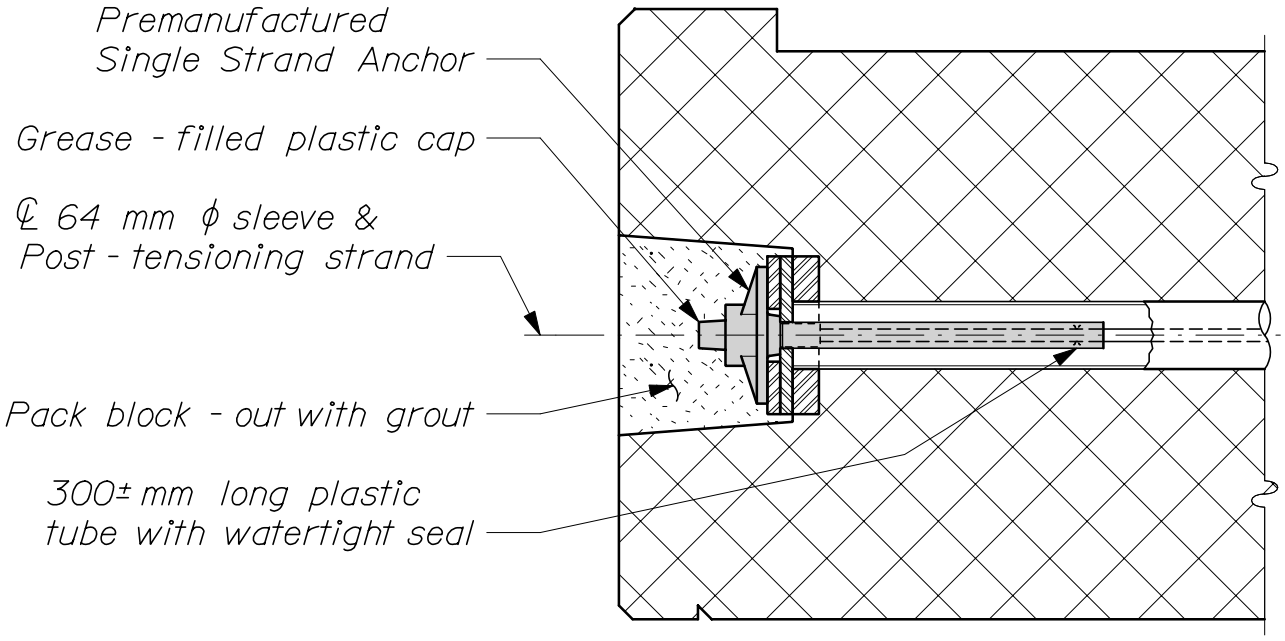

-- POST - TENSIONING ANCHORAGE DETAIL --

PRECAST SUPERSTRUCTURE

535(02)

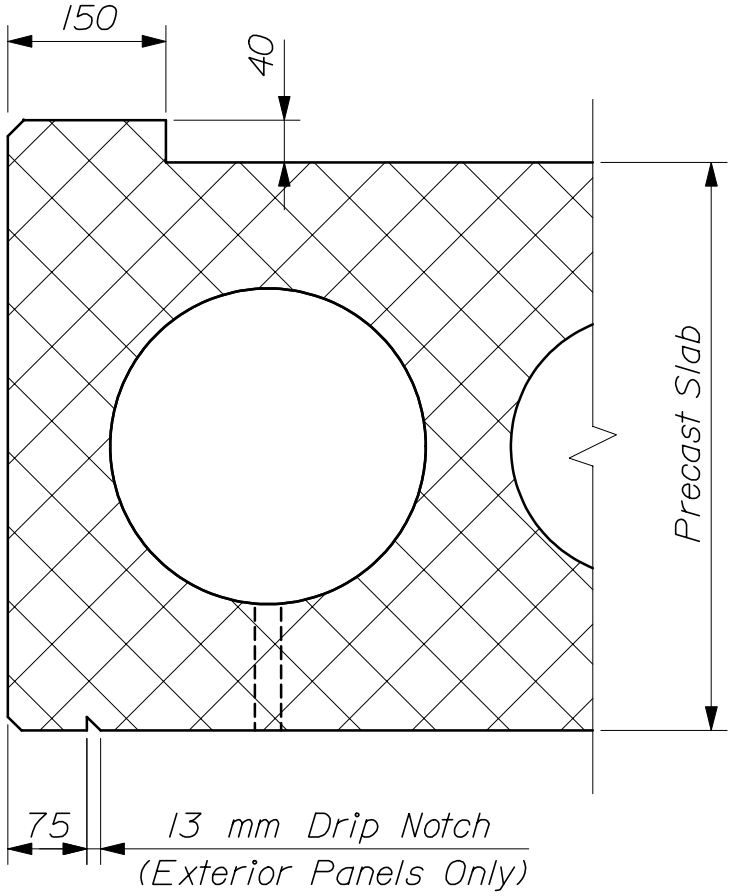

-- KEY & DRIP NOTCH DETAIL --

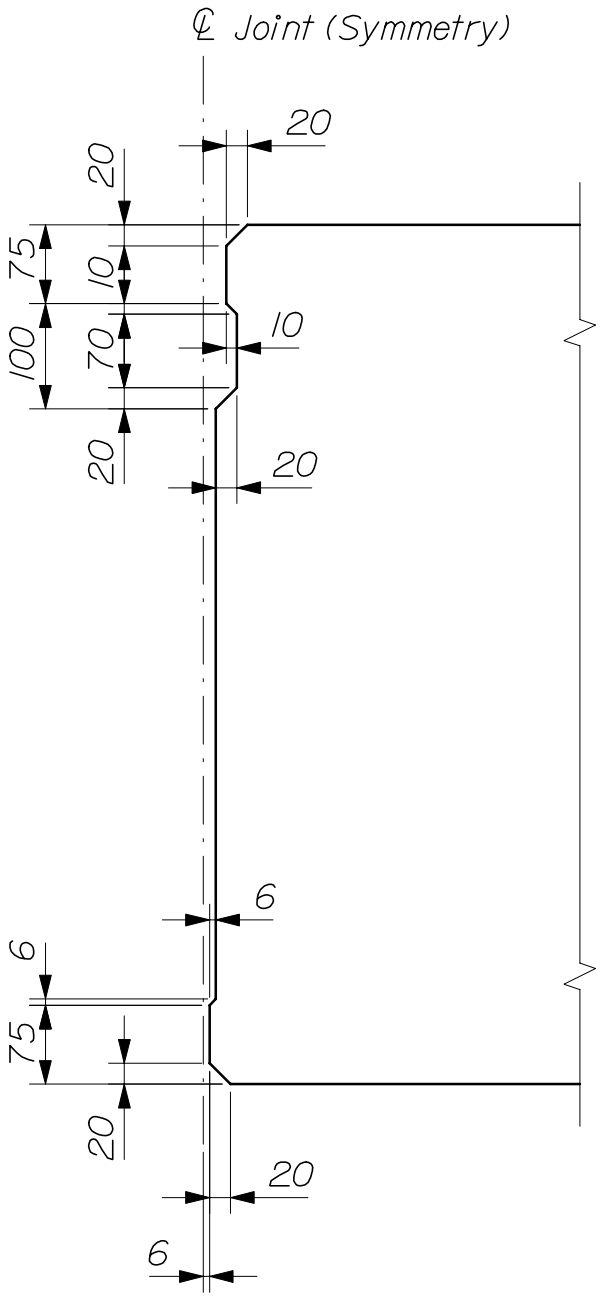

-- PRECAST SLAB SHEAR KEY DIMENSIONS --

PRECAST SLAB
535(04)

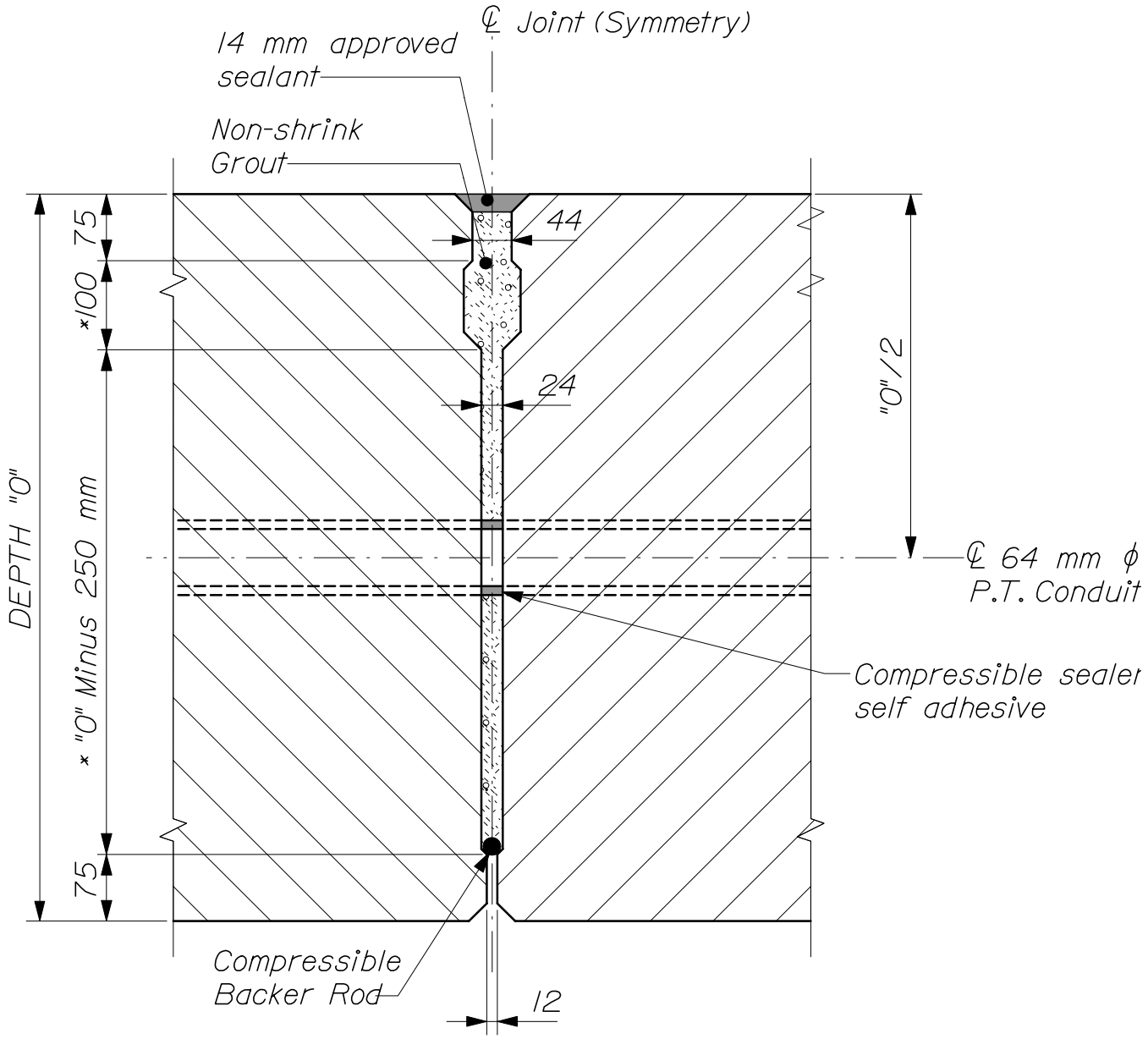

-- PRECAST SLAB SHEAR KEY DETAIL --

To provide parallel surfaces for the installation of the compressible sealer on precast slabs with a depth less than 450 mm the key dimensions (*) shall be adjusted by the fabricator. The surfaces shall extend a minimum 50 mm radius from the ℄ of the Post Tensioning (P.T.) Conduit.

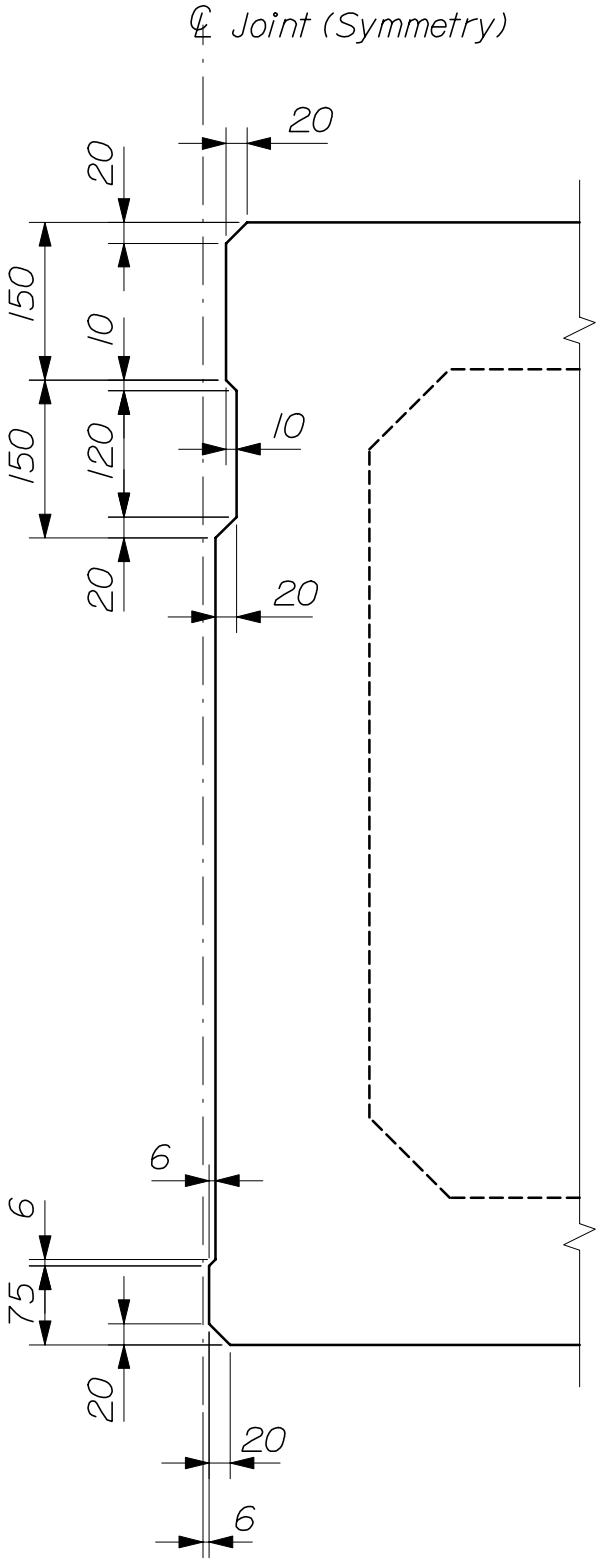

-- SHEAR KEY DIMENSIONS --

PRECAST BOX BEAM

535(06)

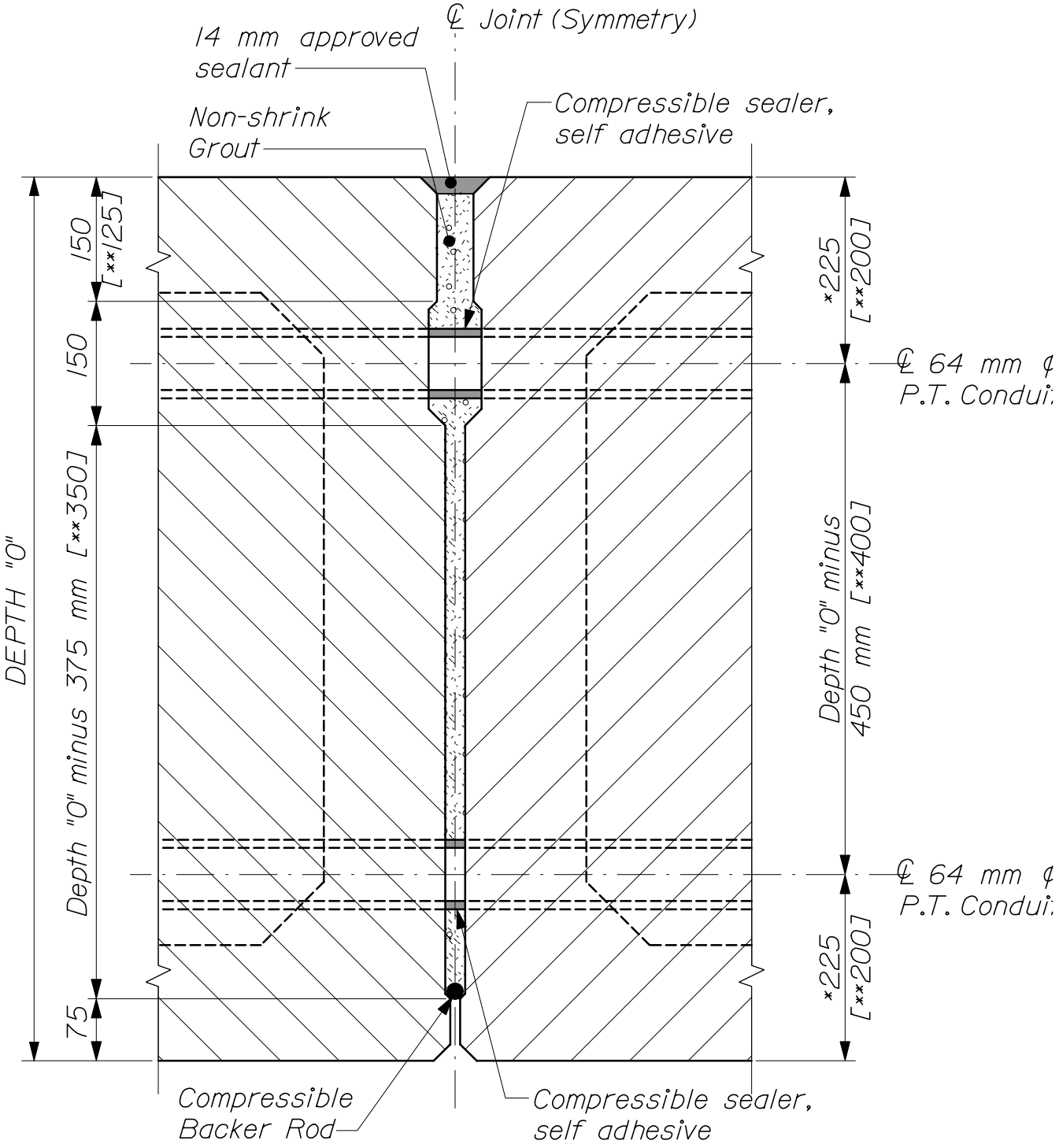

[*] Adjust to clear prestressing strands.
[**] Dimension for 600 mm depth box only.
P. T. = Post tensioning

-- SHEAR KEY DETAIL --

PRECAST BOX BEAM

535(07)

DIVISION 600

MISCELLANEOUS CONSTRUCTION

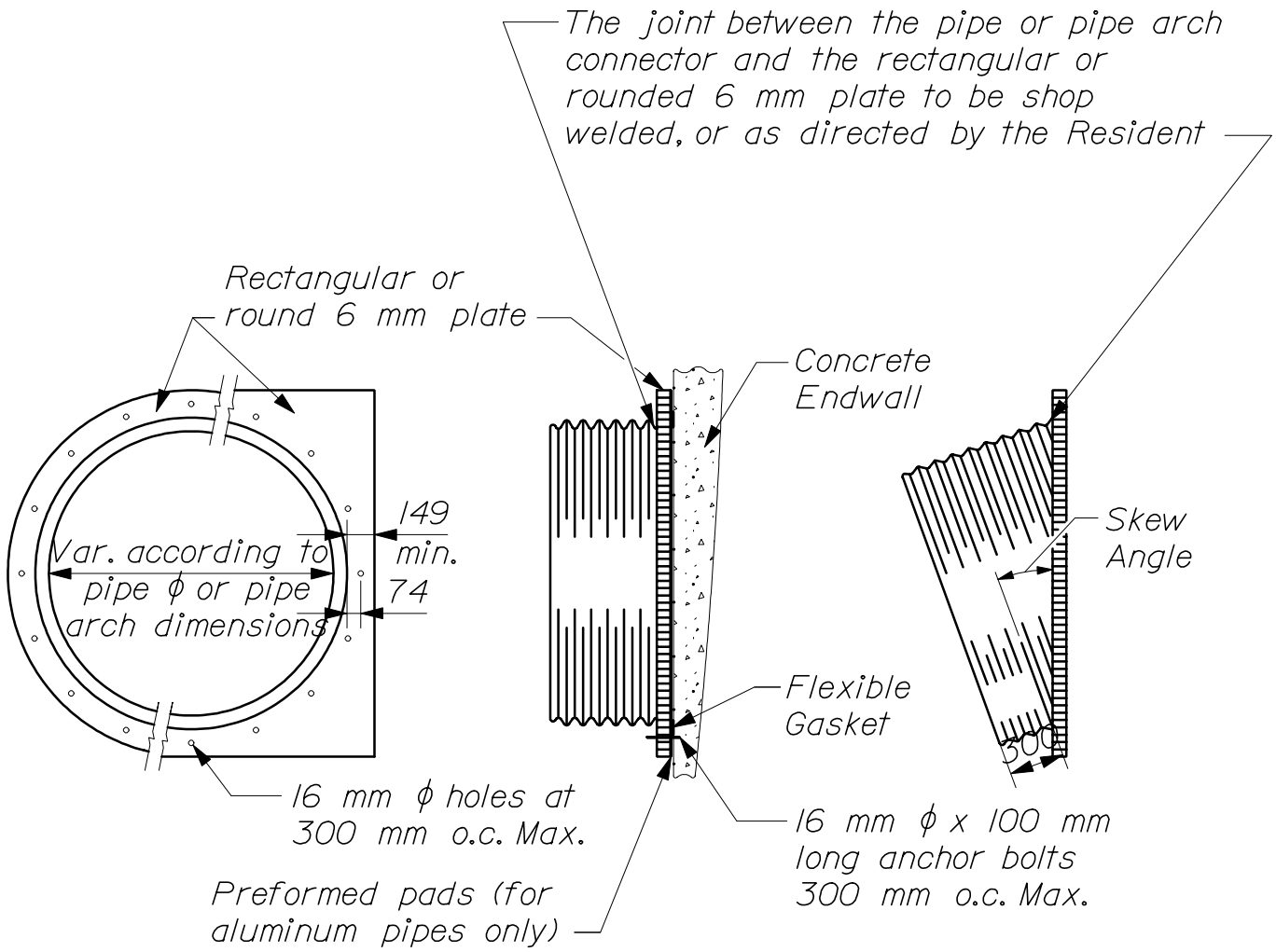

METAL CULVERT CONNECTOR

CONNECTOR FOR SKEWED PIPE

CONCRETE BOX CULVERT EXTENSION USING CORRUGATED METAL PIPE & PIPE ARCHES

603(01)

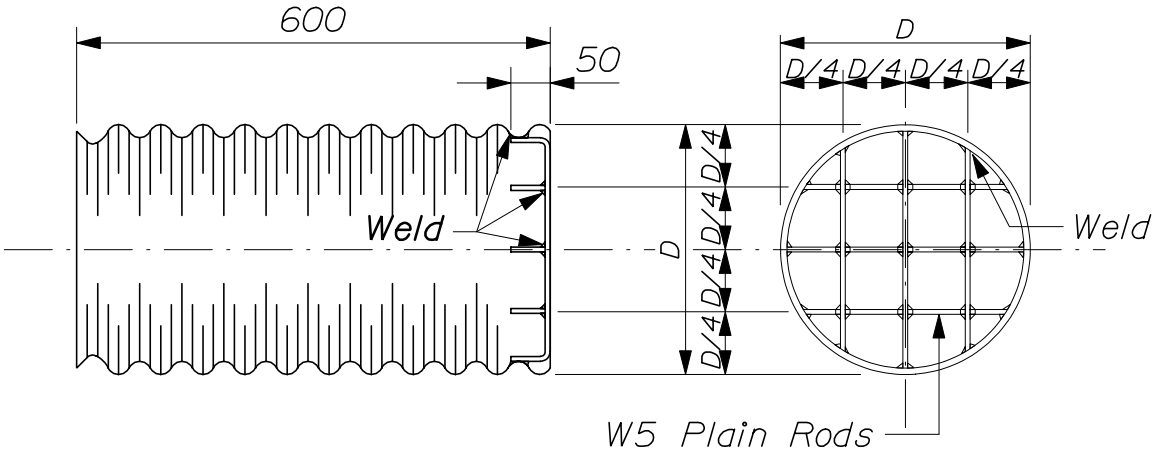

INLET GRATE UNIT

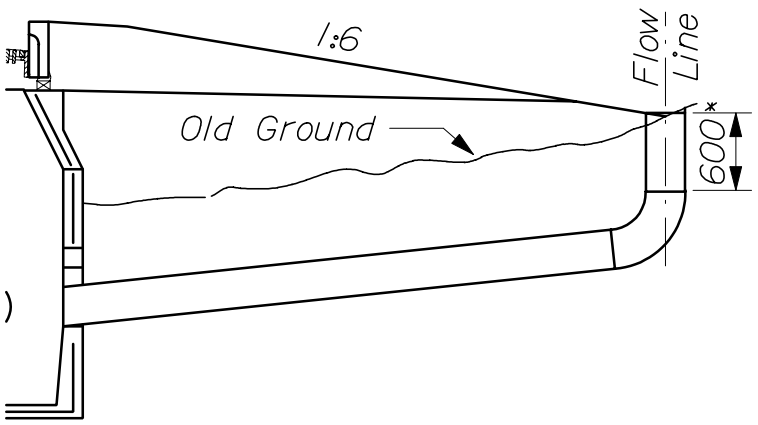

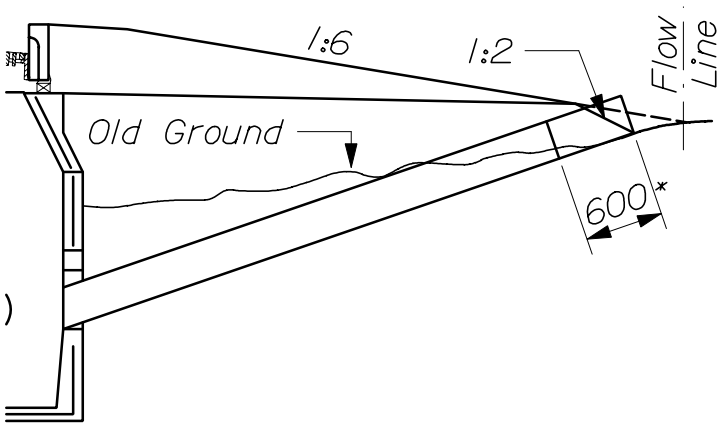

Notes:

1. All units to be complete shop assembly.
2. All units to have one shop coat of approved aluminum paint.
3. An elbow shall be installed if directed by the Resident to provide a horizontal grate, and shall be paid for as 1 additional meter of the type and size of pipe involved.
4. Rods shall conform to the requirements of Section 709.01 of the Standard Specifications.
5. Pipe for inlet grate unit shall be the same type that is used to connect into the catch basin.

* 600 mm Inlet Grate Unit.

INLET UNITS IN FILL AREAS

INLETS

603(02)

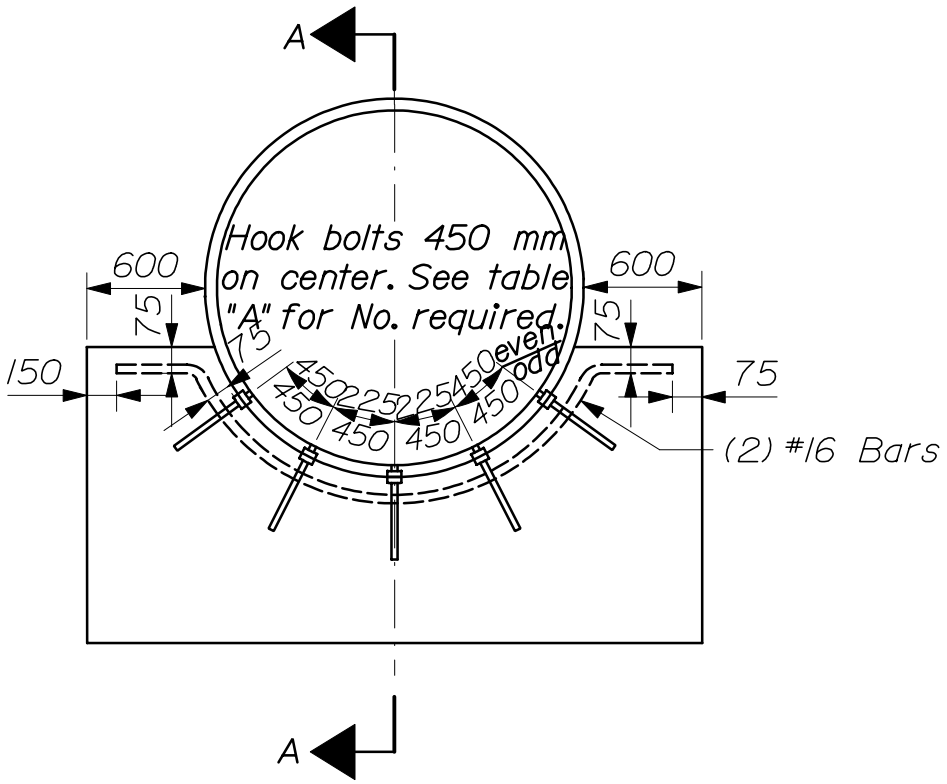

Projection after installation

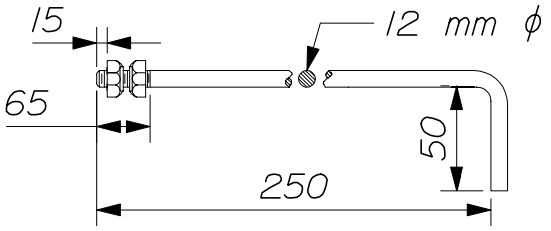

HOOK BOLT FOR RIVETED PLATE PIPES

Projection after installation

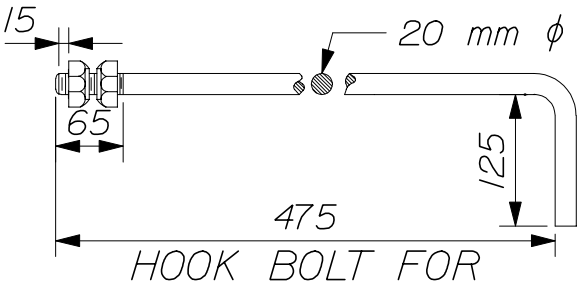

HOOK BOLT FOR STRUCTURAL PLATE PIPES

For alternate bolt see notes.

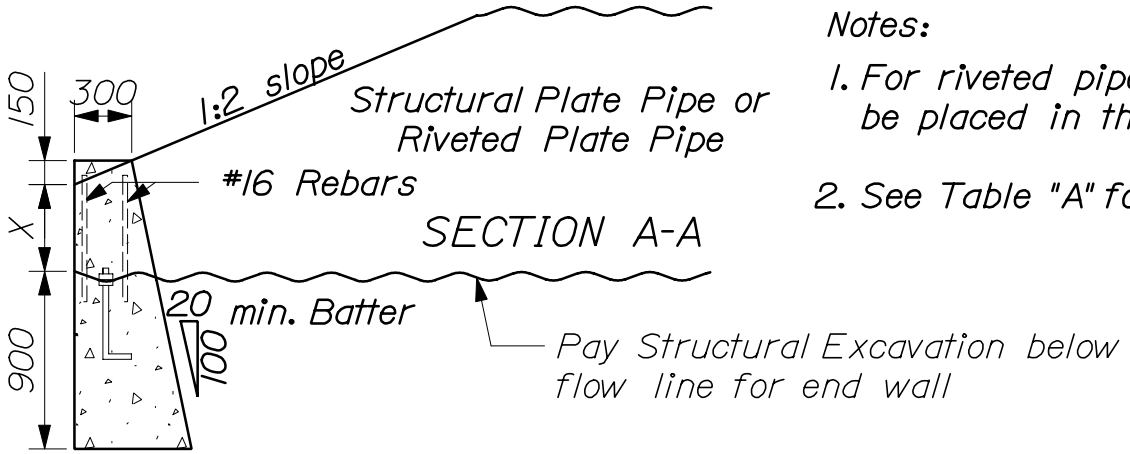

Notes:

1. For riveted pipe, hook bolt shall be placed in the second valley.
2. See Table "A" for "X" dimension.

CONCRETE INLET ENDWALL

603(03)

RIVETED PIPES		
SIZE	NO. OF BOLTS REQUIRED	"X" DIMENSION
1500	4	450
1650	4	450
1800	4	450
1950	5	450
2100	5	450
STRUCTURAL PLATE PIPE		
SIZE	NO. OF BOLTS REQUIRED	"X" DIMENSION
1800	4	450
1950	5	500
2100	5	525
2250	5	575
2400	6	600
2550	6	650
2700	6	675
2850	7	725
3000	7	750
3150	7	800
3300	8	850
3450	8	875
3600	9	925
3750	9	950
3900	9	1000
4050	10	1025
4200	10	1050
4350	10	1100
4500	11	1150

Notes:

1. Culverts installed under 1:2 slopes shall have Riprap laid on 1:2 slope with no ditch transitions.

2. Excavation required to grade culvert inlets and outlets as shown will not be paid separately, but will be incidental to the culvert.

3. Hook bolts will be incidental to the concrete items.

4. Concrete endwall shall be structural concrete class "A" and shall be paid for as Item 502.32 or Item 502.329, Structural Concrete Culvert Endwall. Reinforcing steel will not be paid for separately but will be considered incidental to Item 502.32 or Item 502.329.

5. Standard galvanized carriage or machine bolts 12 mm x 200 mm long or 20 mm x 150 mm long with minimum 50 mm thread may be furnished in place of hook bolts. Washers shall be furnished at the head of each bolt.

6. Bolt material shall conform to ASTM F568 Class 4.6. Nuts shall conform to ASTM A563M. Bolts, nuts, and washers shall be hot dip galvanized after fabrication to meet ASTM A153.

TABLE A

CONCRETE INLET ENDWALL

603(04)

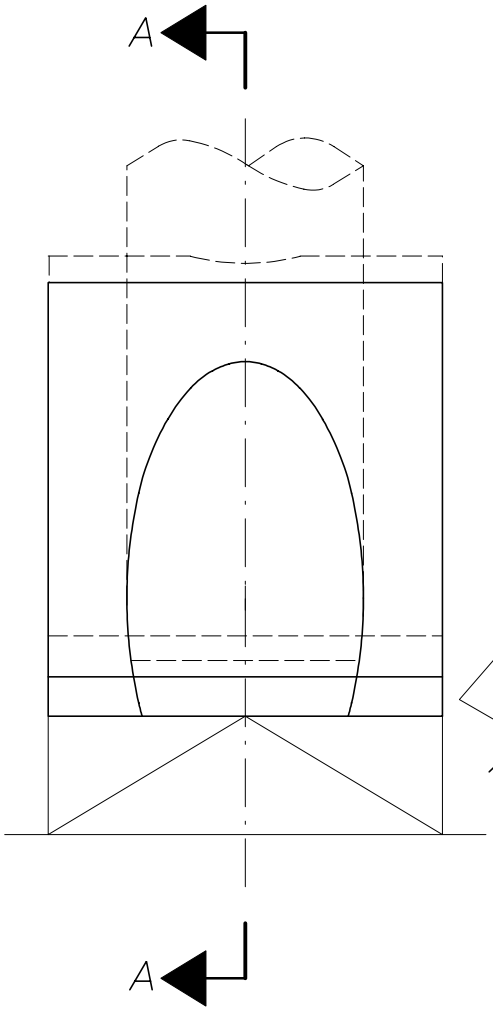

PLAN VIEW

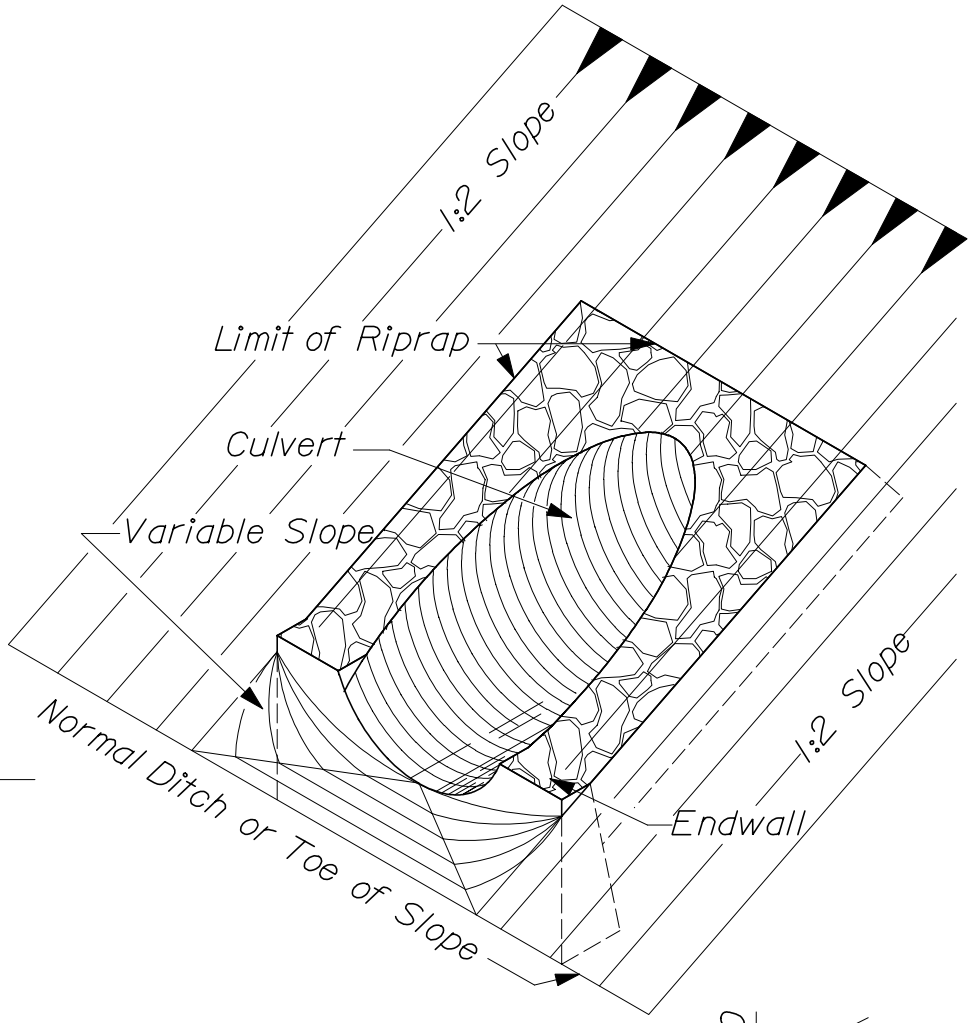

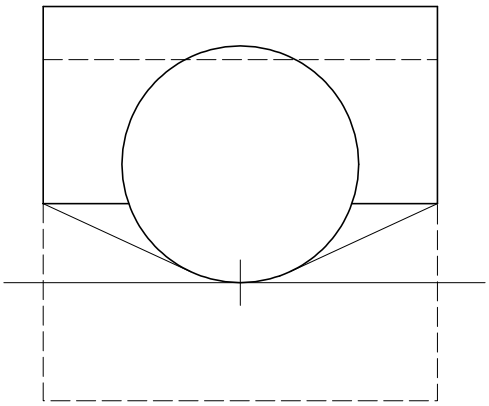

END VIEW

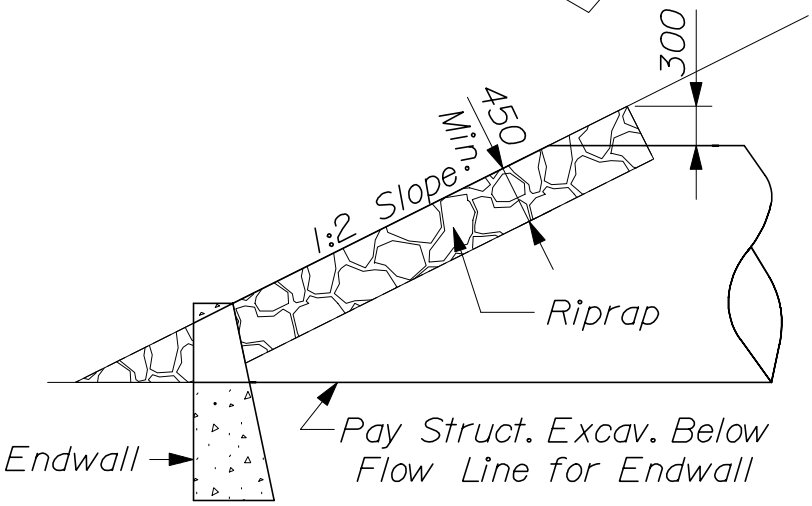

SECTION A-A

CONCRETE INLET ENDWALLS FOR RIVETED AND STRUCTURAL PLATE PIPES 1 500 mm TO 4 500 mm IN 1:2 SLOPES

603(05)

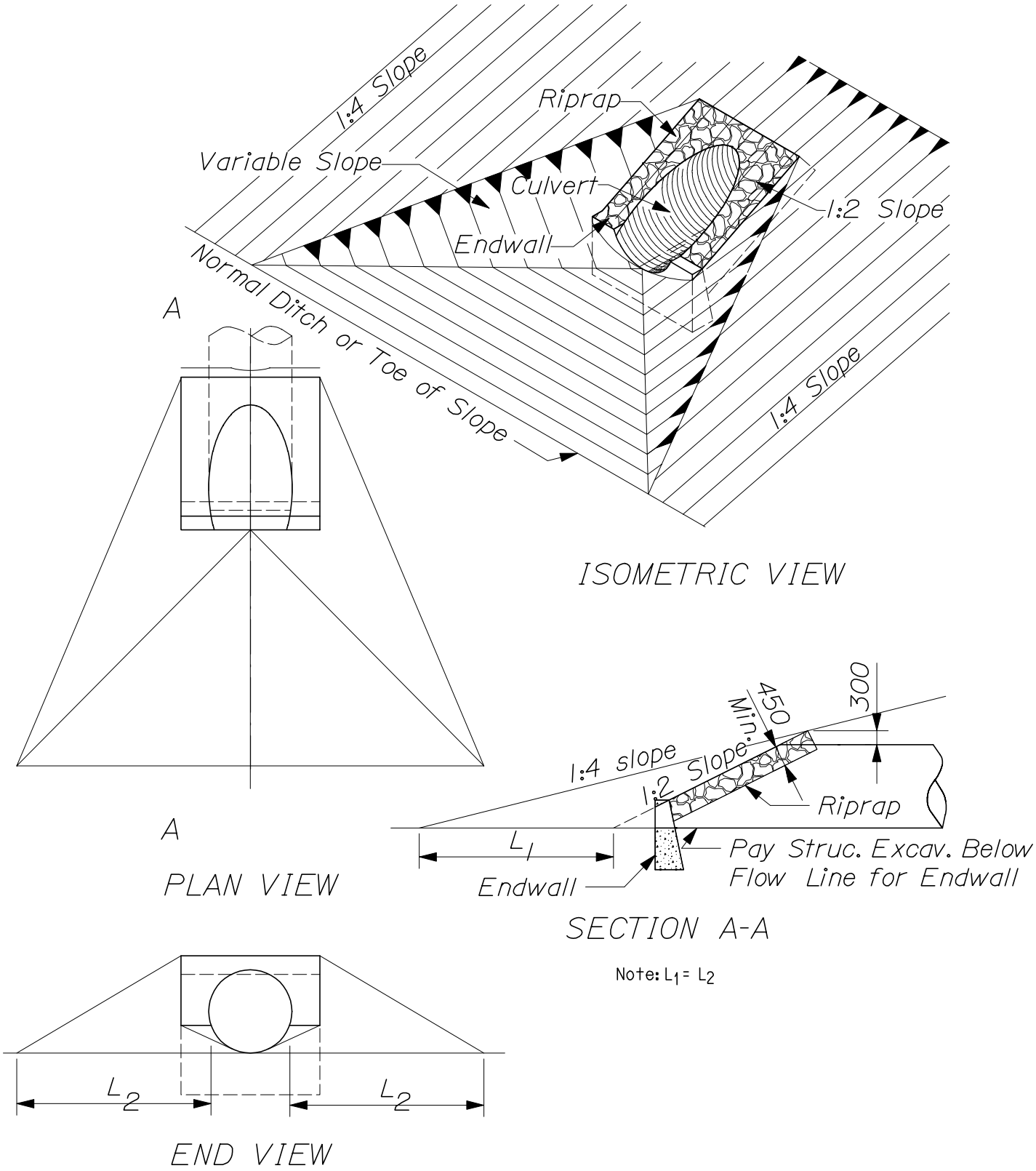

CONCRETE INLET ENDWALLS FOR RIVETED AND STRUCTURAL PLATE PIPES 1 500 mm TO 4 500 mm IN 1:4 SLOPES

603(06)

PIPE ARCH CULVERT (NOMINAL WALL THICKNESS IN MILLIMETERS)		
	CORRUGATED METAL PIPE ARCH OPTION III	
NOMINAL SIZE IN MILLIMETERS SPAN x RISE	M 246 & FIBER BONDED	M 197
525 x 375	2.0	1.9
600 x 450	2.0	1.9
700 x 500	2.0	2.7
875 x 600	2.8	2.7
1 000 x 775(1) 1 050 x 725(2)	2.0 2.8	1.9
1 150 x 900(1) 1 225 x 825(2)	2.0 3.5	2.7
1 325 x 1 025(1) 1 425 x 950(2)	2.0 3.5	2.7
1 500 x 1 150(1) 1 600 x 1 075(2)	2.8 4.3	3.4
1 650 x 1 275(1)	2.8	3.4
1 825 x 1 375(1)	2.8	4.2
2 025 x 1 475(1)	2.8	4.2

Metal Pipe Values are for 68 mm x 13 mm corrugations unless size is followed by a (1) which denotes 76 mm x 25 mm corrugations.

M 246 = Polymer Pre-coated Galvanized Corrugated Steel Pipe

M 197 = Corrugated Aluminum Alloy Pipe

Fiber Bonded = M.D.O.T. Spec. 707.04

Minimum cover is 900 mm

(2) Either size is acceptable

CULVERT WALL THICKNESS

603(07)

COUPLING BAND WIDTH REQUIREMENTS					
NOMINAL CORRUGATIONS	NOMINAL PIPE INSIDE DIAMETER	COUPLING BAND WIDTH			
		ANNULAR CORRUGATED BANDS		HELICALLY CORRUGATED BANDS	
		M 196	M 36	M 196	M 36
38x6	150	265	265	180	180
68x13	300 - 600	265	265		
76x25	750 - 2 100	300	300		
125x25	900 - 2 100		500		

Helically Corrugated Metal Pipe 300 mm in diameter and larger shall have the ends rerolled to provide at least two annular corrugations. Pipe with spiral corrugations shall have continuous helical lock seams.
M 196 = Corrugated Aluminum Alloy Pipe
M 36 = Corrugated Steel Pipe

CULVERT WALL THICKNESS

603(08)

CULVERT PIPE

603(09)

CIRCULAR CULVERT PIPE (NOMINAL WALL THICKNESS IN MILLIMETERS)

DIAMETER	CORRUGATED METAL PIPE				SPIRAL RIB (TYPE IR)(B)		PLASTIC PIPE		REINFORCED CONCRETE PIPE		
	OPTION I		OPTION I/III		OPTION I	OPTION I/III	OPTION I / III	OPTION III	OPTION I/III		
	M218	M274 (A)	M246 & FIBER BONDED	M197	M274 (A)	M197	M294 DAUL-WALL PIPE STIFFNESS @5% DEFL.	M278	M170 CLASS III WALL A	M170 CLASS III WALL B	M170 CLASS III WALL C
300	2.0	1.6	1.6	1.9			344	9.09	44	51	
375	2.0	1.6	1.6	1.9			289	11.13	48	57	
450	2.8	1.6	2.0	1.9	2.0	2.7	276		51	64	
525	2.8	1.6	2.0	1.9	2.0	2.7			57	70	
600	2.8	1.6	2.0	1.9	2.0	2.7	234		64	76	95
675	2.8	1.6	2.0	2.7					67	83	102
750	2.8	2.0	2.0	2.7	2.8	3.4	193		70	89	108
825	2.8	2.0	2.0	2.7					73	95	114
900	2.8	2.8	2.0		2.8	3.4	151		76	102	121
900 (1)		1.6	2.0	1.9							
1 050	3.5	4.3	2.8				140		89	114	133
1 050 (1)		2.0	2.0	2.7	2.8						
1 200	3.5	4.3	2.8				125		102	127	146
1 200 (1)		2.0	2.0	2.7	2.8						
1 350	4.3	4.3	3.5						114	140	159
1 350 (1)		2.0	2.0	2.7	2.8						
1 500	4.3	4.3	3.5						127	152	171
1 500 (1)		2.0	2.0	2.7	2.8						
1 650 (1)		2.8	2.0	3.4					140	165	184
1 800 (1)		2.8	2.8	3.4					152	178	197
1 950 (1)		3.5	2.8	4.2						190	210
2 100 (1)		3.5	2.8	4.2						203	222

Metal Pipe values are for 68 mm x 13 mm Corrugations unless diameter is followed by (1) which requires 76 mm x 25 mm Corrugations for Aluminum Pipes and 76 mm x 25 mm or 125 mm x 25 mm Corrugations for Steel Pipes.
Option I Pipes shall only be used for entrances.
Fill heights over 4.5 m may require larger metal gages.

M218 = zinc coated (galvanized) corrugated steel pipe
M274 = aluminum coated (tpye 2) corrugated steel pipe
M246 = polymer pre-coated galvenized corrugated steel pipe
Fiber Bonded = M.D.O.T. Spec. 707.04

M197 = Corrugated Aluminum Alloy Pipe
M278 = Polyvinyl Chloride Pipe
M170 = Reinforced Concrete Pipe
M294 = High Density Polyethylene Pipe

(A) Option I, M274 can be used for closed drainage Option III Pipe
(B) Spiral Rib Type IR can be used for Smoothlined Pipe

GENERAL NOTES

1. Catch basins in excess of 2 400 mm in depth shall, if directed, be provided with steps similar to those detailed for manholes.

2. Drain holes in precast sumps shall be not over 75 mm in diameter and shall be plugged with mortar when constructed.

3. All precast sections of less than 204 mm wall thickness shall have tongue and groove joints.

4. Cone and ring sections shall have a wall thickness of 100 mm minimum to 204 mm maximum.

5. Minimum wall thickness at the sump shall be 100 mm as specified in A.S.T.M. C478M.

6. The wall around inlet and outlet pipes shall be a precast ring with an opening 50 mm larger than the outside diameter of the pipe.

7. Lift holes shall be provided.

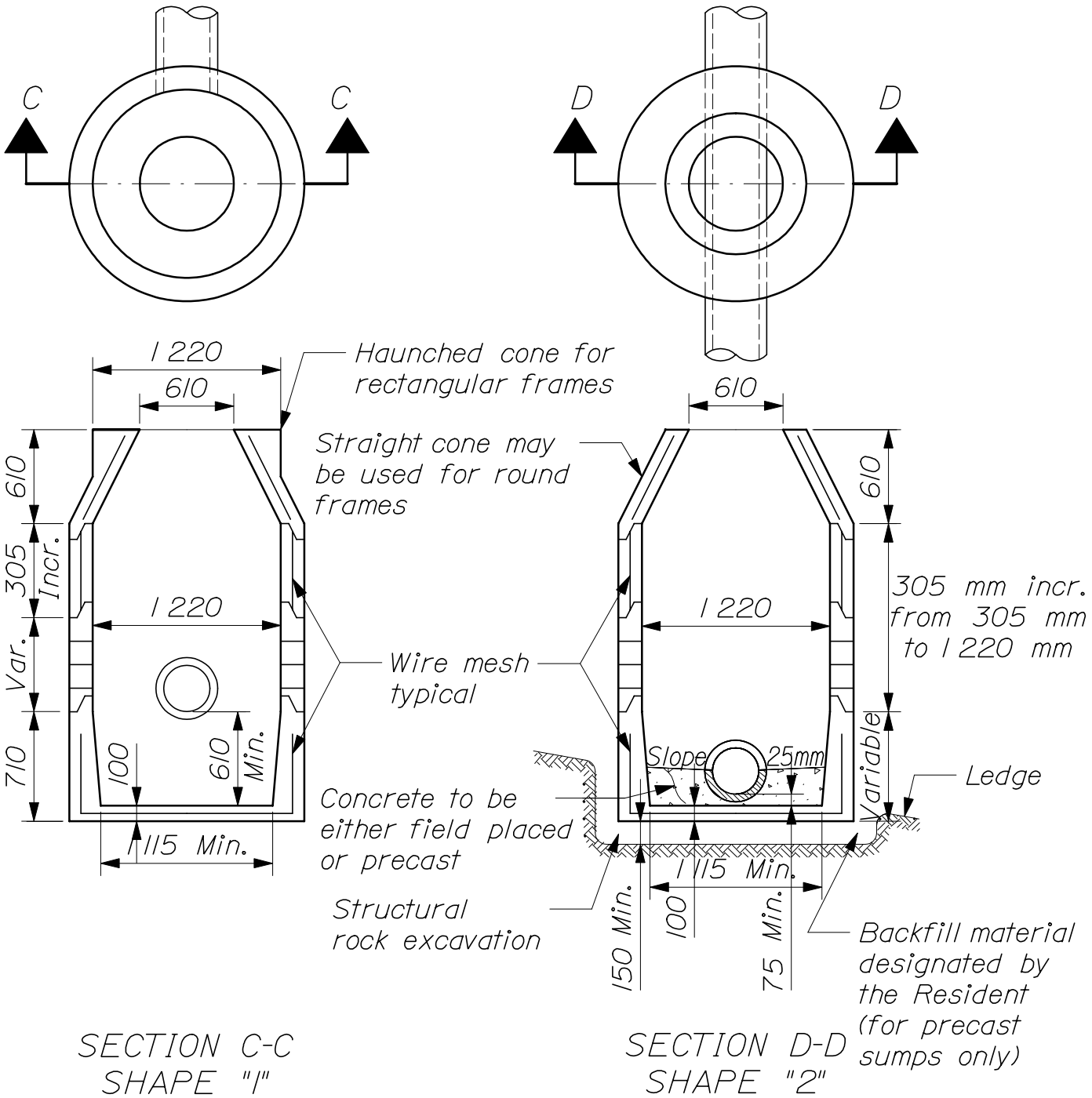

Dimensions are intended to be nominal

CATCH BASIN (PRECAST UNITS)

604(02)

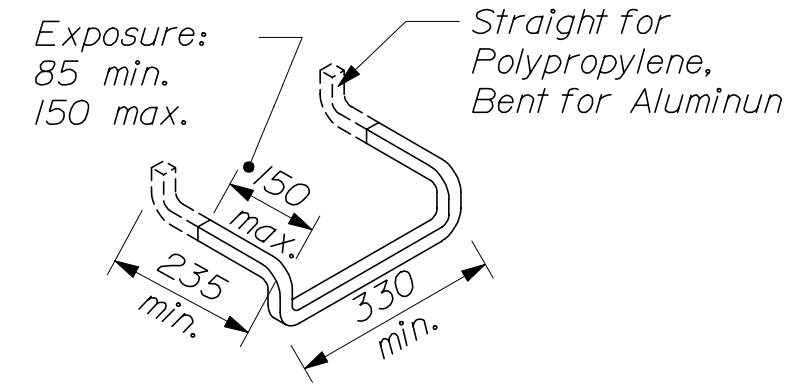

STEP

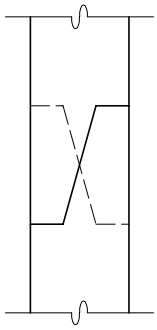

DETAIL "A"
Alternate Joint

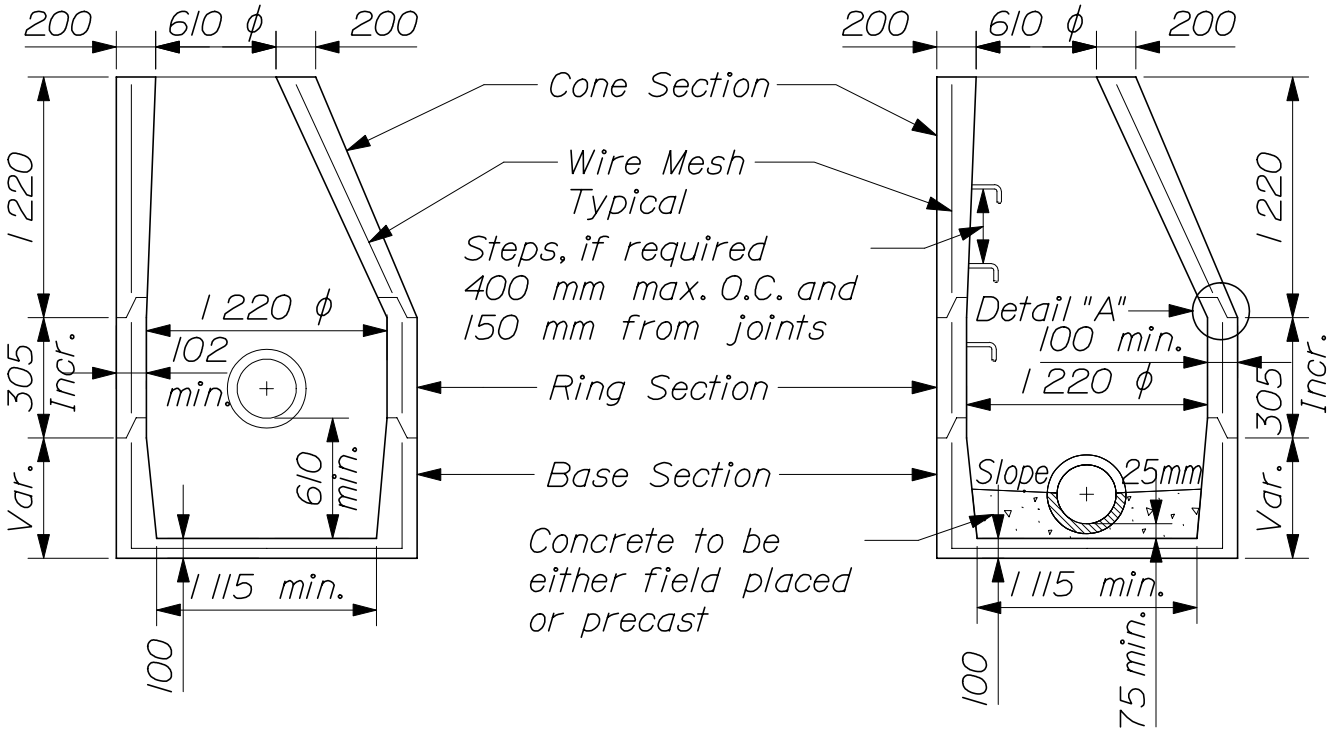

SHAPE "5"

SHAPE "6"

Dimensions are intended to be nominal.

CATCH BASIN OR MANHOLE

604(03)

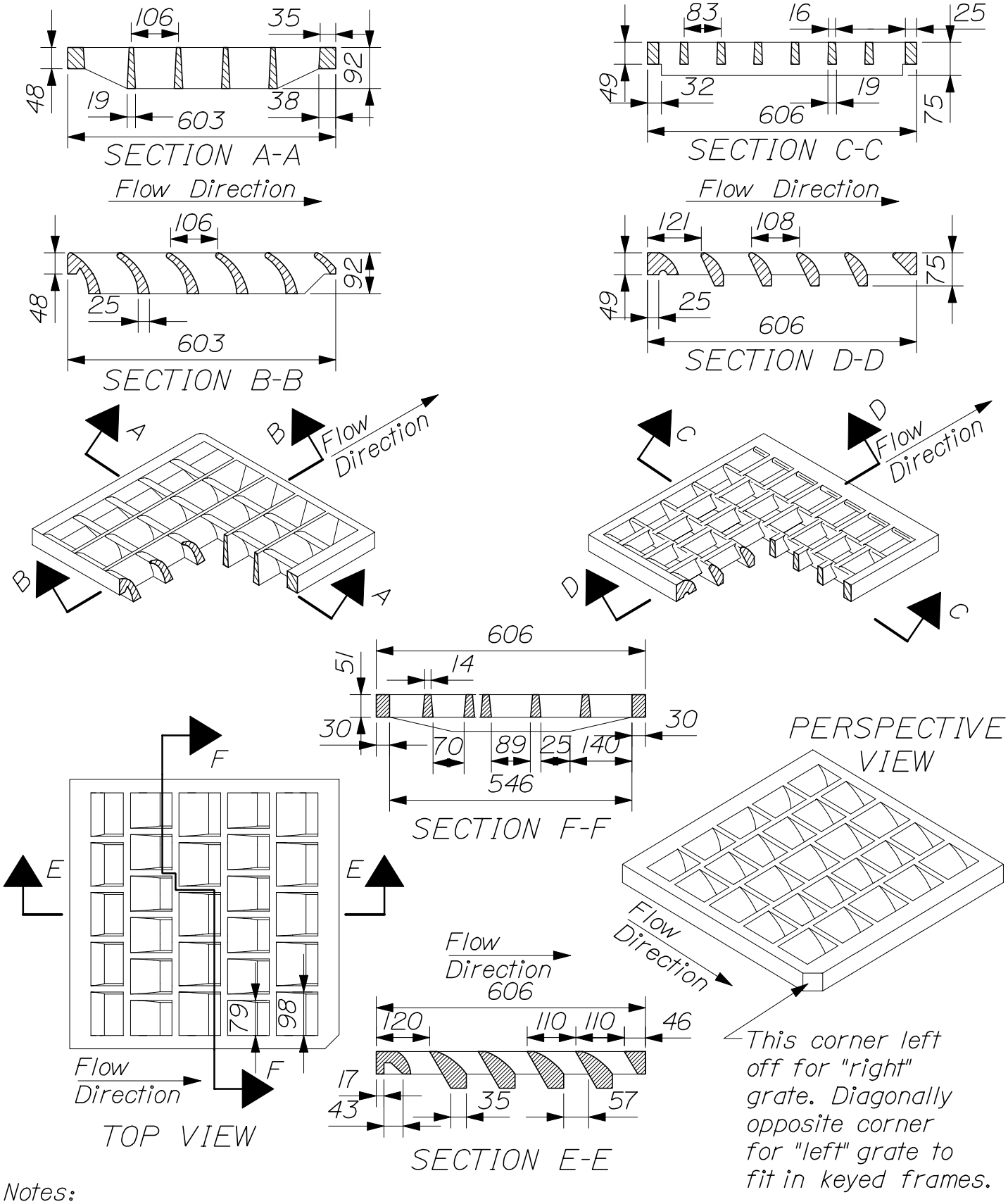

Notes:

1. To be used where parallel bar grates would present a hazard to bicycle traffic.
2. For use on catch basin types: A1-C, A2-C, A5-C, B1-C, B2-C, B5-C, F3-C, F4-C, F5-C, F6-C.

"CASCADE - TYPE" GRATES

604(04)

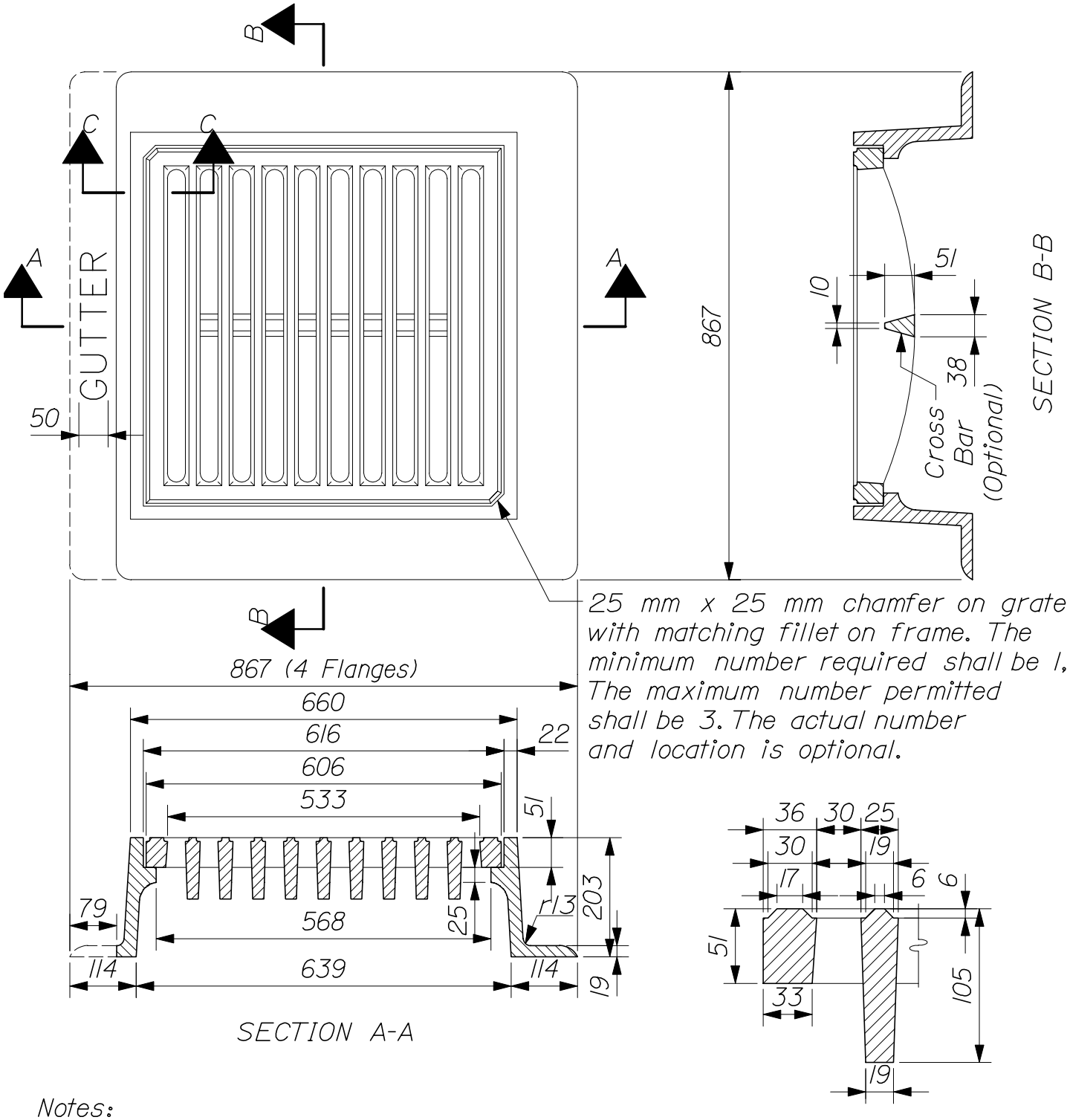

Notes:

1. Type "A" frames are to have 3 flanges.
2. Type "B" frames are to have 4 flanges.
3. The word "gutter" is to be molded into the back flange - type "B" only.
4. Frames and grates are to be of gray cast iron conforming to AASHTO M105, Class 30.
5. Dimensions are nominal.

TYPE "A" & "B" CATCH BASIN TOPS

604(05)

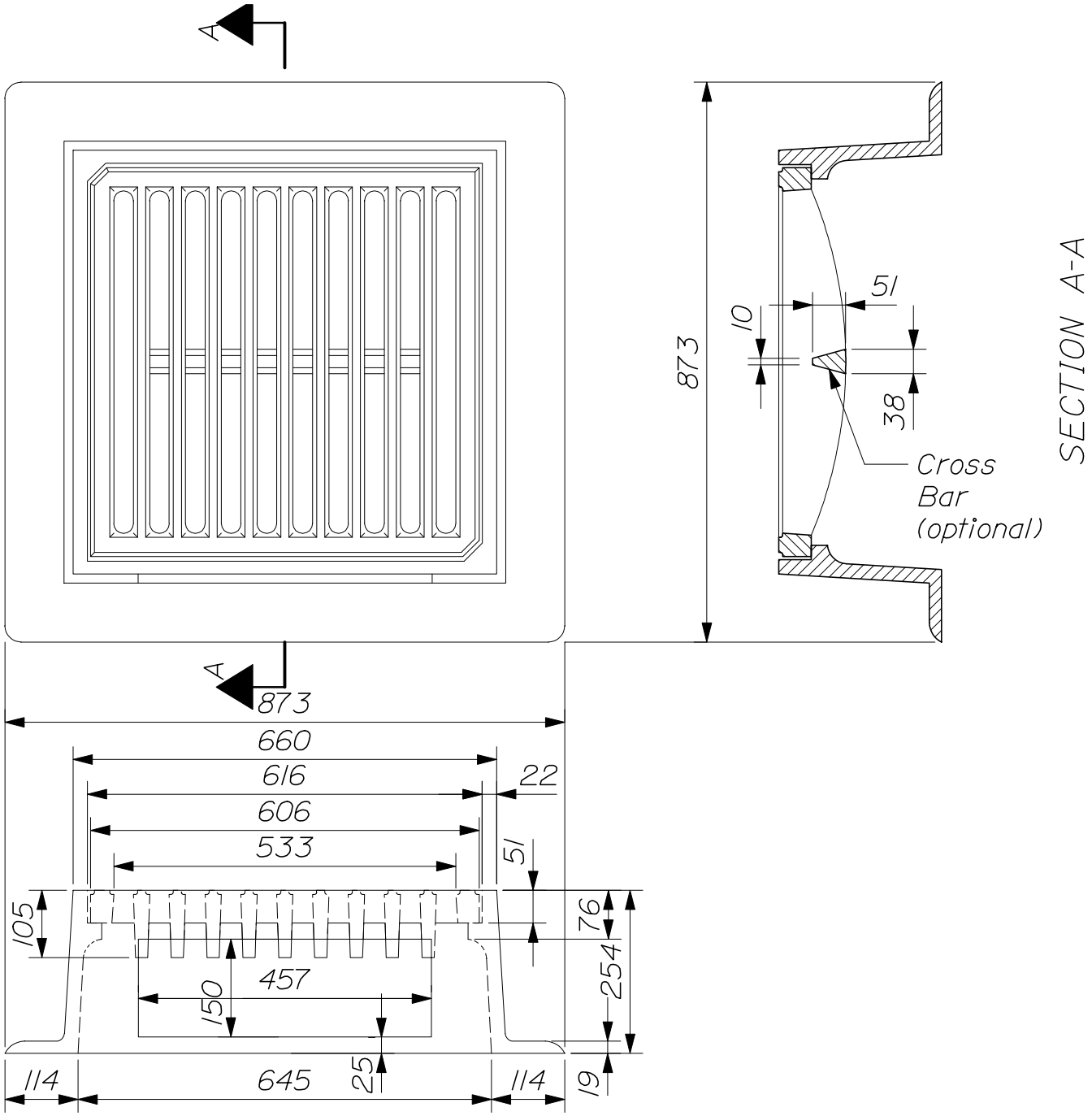

Notes:

1. Open throat shall be constructed on the side away from the direction of traffic. All other sides shall be graded flush with the top of the catch basin grate.

2. The frame shall be gray cast iron.

3. The grate shall be the same as Types "A" & "B".

4. Dimensions are intended to be nominal.

TYPE "C" CATCH BASIN TOPS

604(06)

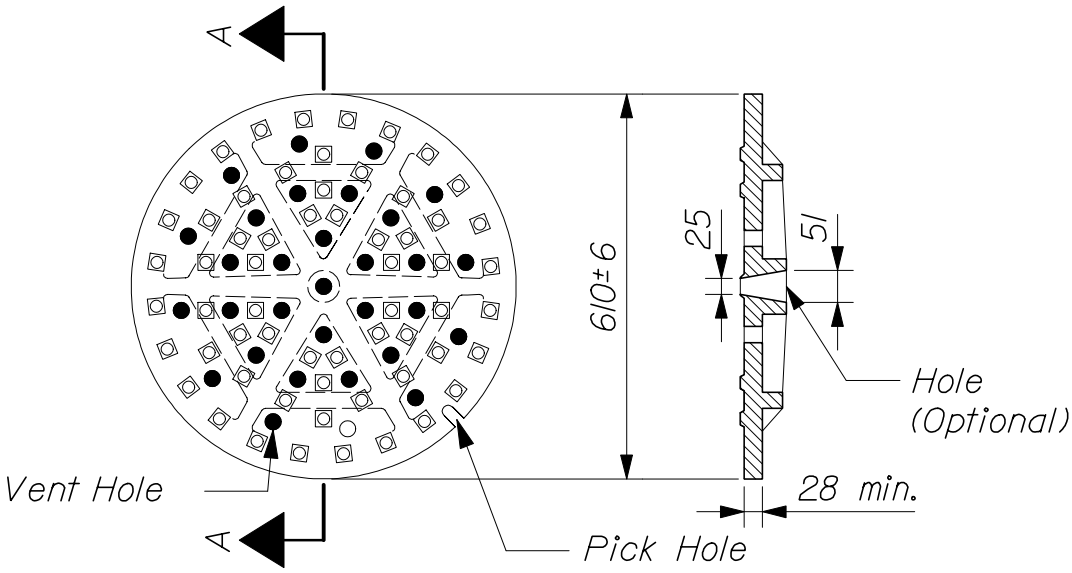

COVER SECTION A-A

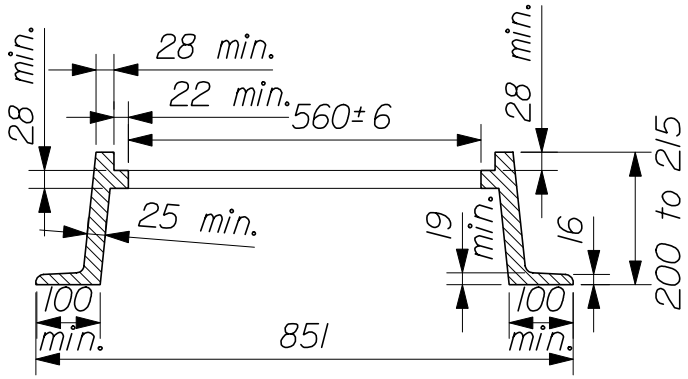

FRAME

Notes:

1. Manhole frames and covers are to be machined to a smooth fit and shall be of gray cast iron.

2. Diamond top surface is optional.

MANHOLE TOP "D"

604(07)

Structure	Top				Shape			
Catch Basin	A	B	C	D	1	2	5	6
Type A1	■				■		■	
Type A2	■					■		■
Type B1		■			■		■	
Type B2		■				■		■
Type C1			■		■		■	
Type C2			■			■		■
Manhole				■		■		■

TABLE OF CATCH BASIN TYPES
(combinations of tops and types)
For Type "E" & "F" Catch Basins see HD-2

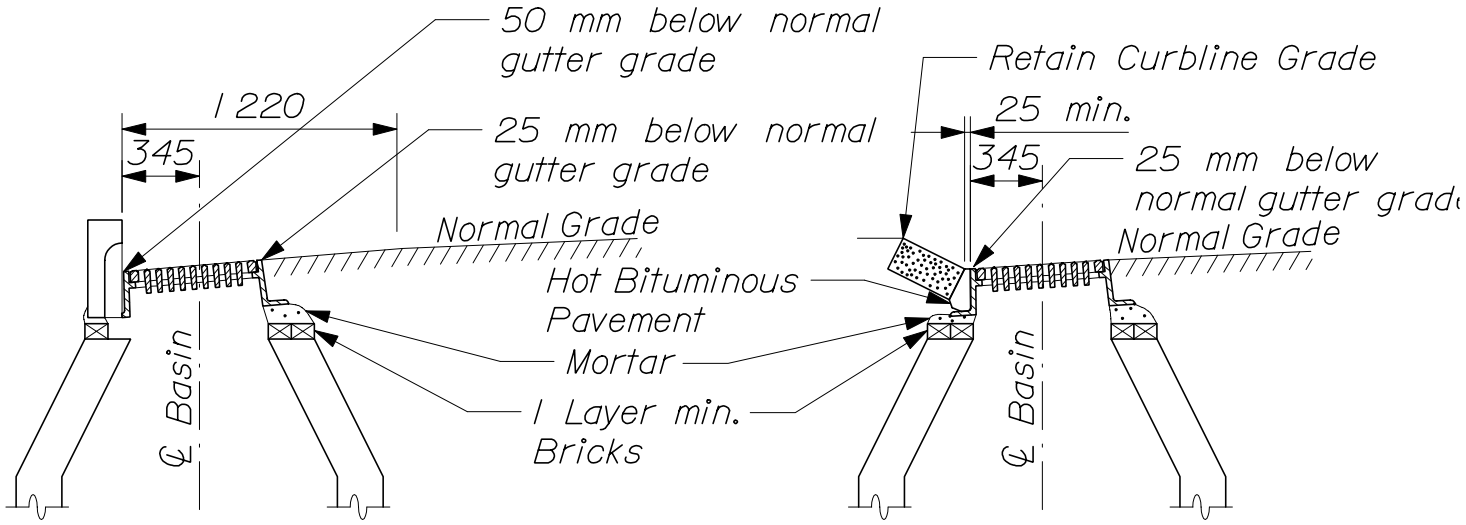

TYPE "A"
For use with
Curb Type 1 or 2

TYPE "B"
For use with
Curb Type 3 or 5

Dimensions are intended to be nominal.

CATCH BASIN TOP INSTALLATION

604(08)

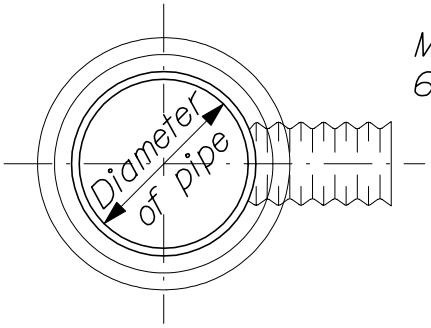

PLAN (WITHOUT COVER)

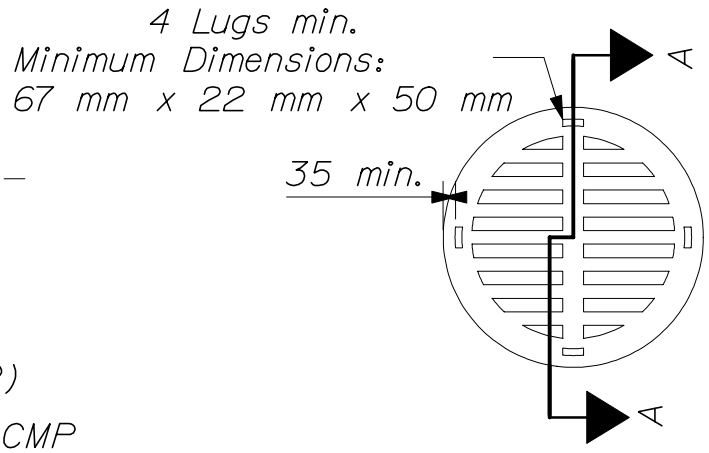

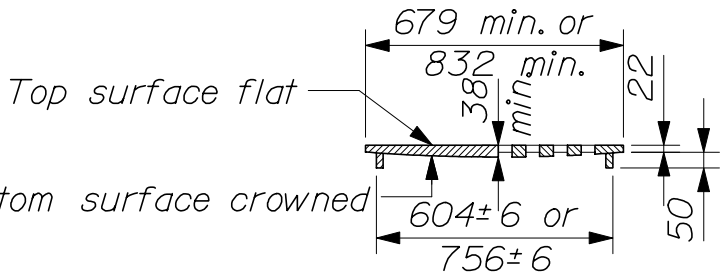

SECTION A-A

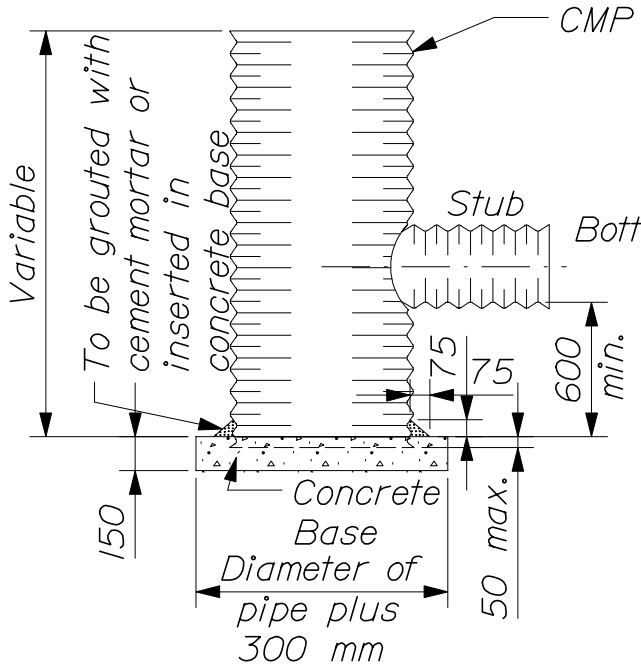

ELEVATION

Notes:

1. Excess pipe to be cut and folded against the inside wall of catch basin. Joints to be caulked with with Oakum and Asphalt Cement. Joints may be shop welded.

2. Stubs to be made from 600 mm length of pipe. Cost shall be incidental to the Catch Basin item.

3. Grate to be Gray Cast Iron.

4. Bars of grate to be placed parallel with flow.

5. Grate for 762 mm Catch Basins Type "E" shall have a total cumulative width of openings of 350 mm min. Grate for 610 mm Catch Basins Type "E" shall have a total cumulative width of openings of 200 mm min.

6. Corrugated Metal Pipe shall conform to Section 712.08 of the Standard Specifications.

CATCH BASIN TYPE "E"

604(09)

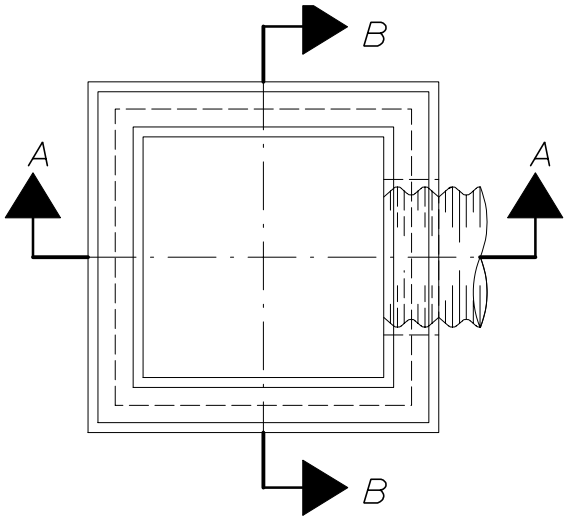

Note:
Entire Catch Basin with exception of leveling brick frame and grate to be precast as a single Portland Cement concrete unit.

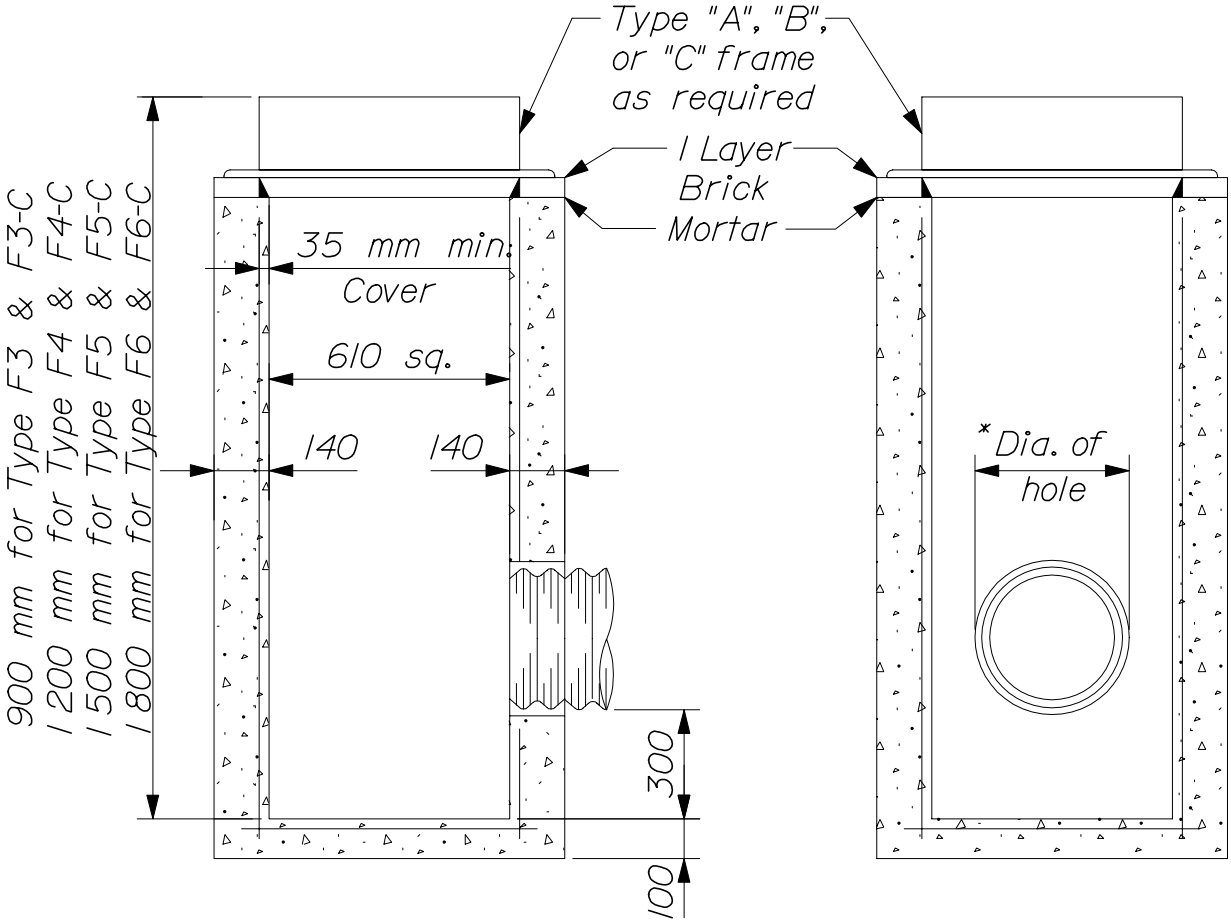

SECTION A-A

SECTION B-B

*Diameter of hole to be 75 mm larger than the inside diameter of flexible pipe or the outside diameter of rigid pipe.

CATCH BASIN TYPE "F"

604(10)

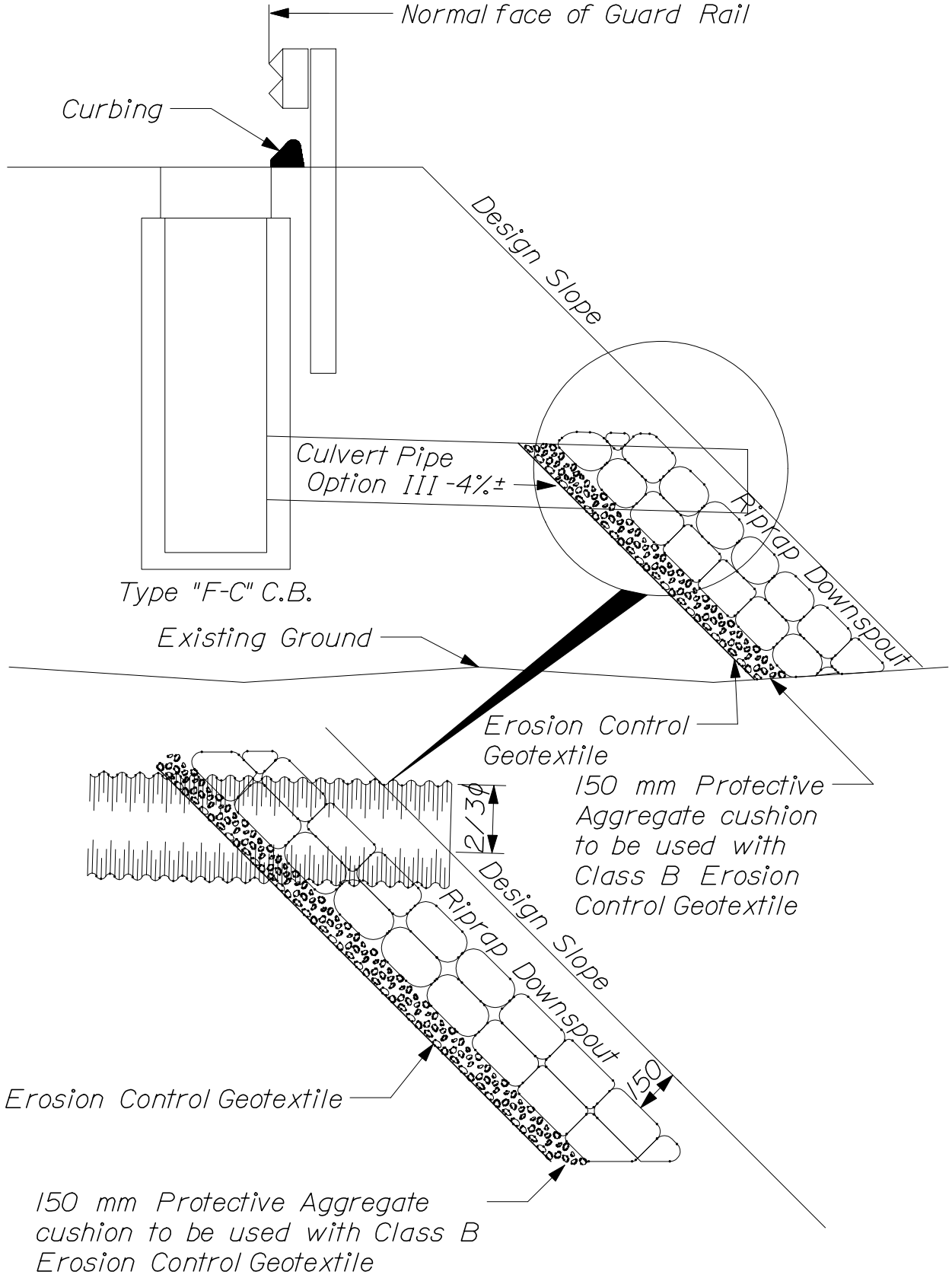

TYPE "F" CATCH BASIN WITH OUTLET PIPE AND RIPRAP

604(11)

General Notes

1. If reinforced concrete barrel - manufacturer - per ASTM Standard Specification #C-478-70.

2. Sewer bricks to conform to ASTM Standard Specification Design #C 32-69, Grade S.M. or S.S.

3. Casting shall be of uniform quality, free from blowholes, porosity, hard spots, shrinkage, distortion, or other defects. They shall be smooth and well cleaned, trimmed and inspected, and approved asphalt paint. Material to be designated in ASTM Standard Specifications.48-Class 35.

4. Catch basins constructed of brick masonry, plaster with mortar 10 mm thick, full depth as shown on plans, and apply two (2) coats of waterproofing.

5. All concrete shall be class "A" having a minimum ultimate compressive strength of 20 700 kpa at the end of 28 days unless otherwise noted.

6. Forged aluminum safety-type manhole steps, if designated, shall be alloy 6061, Temper +6.

7. Manholes constructed of poured concrete masonry, apply (see general note #8) bituminous waterproofing to exterior surface. If constructed of brick masonry plaster with mortar 10 mm thick and apply (see genreal note #8) waterproofing.

8. Waterproofing - the outside surface of catch basins and manhole cones shall be given two coats of bituminous waterproofing material after the plaster or mortar in the joints has become suitably hardened. The material shall be Minwax Fibrous Brush Coat made by The Minwax Company, New York, NY; Tremco 121 foundation coating made by the Tremco manufacturing company, Cleveland, OH; Interoi No.7 made by Interoi Company, Newark, NJ: or approved equal. The waterproofing material shall be applied by brush or spray and in accordance with the instructions of the manufacturer. Time shall be allowed between coats to permit sufficient drying so that the application of the second coat has no effect on the first coat.

9. Catch basins not in a system that connects into existing City of Portland drainage system may be constructed without flexible plastic gaskets and will have a minimum 610 mm sump.

REINFORCED CONCRETE CATCH BASIN TYPE A-1-P & TYPE B-1-P

604(12)

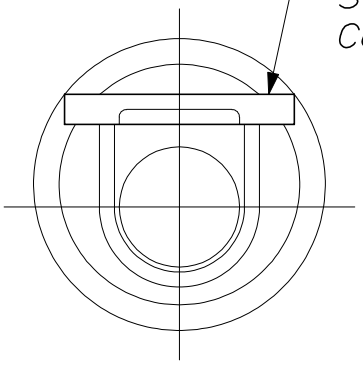

PLAN
COVER-FRAME-STONE

Type A-I-P

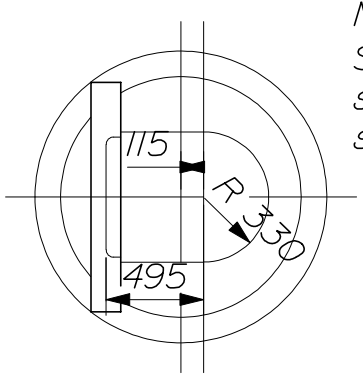

Note:
See top slab detail sheet???

PLAN
TOP SLAB

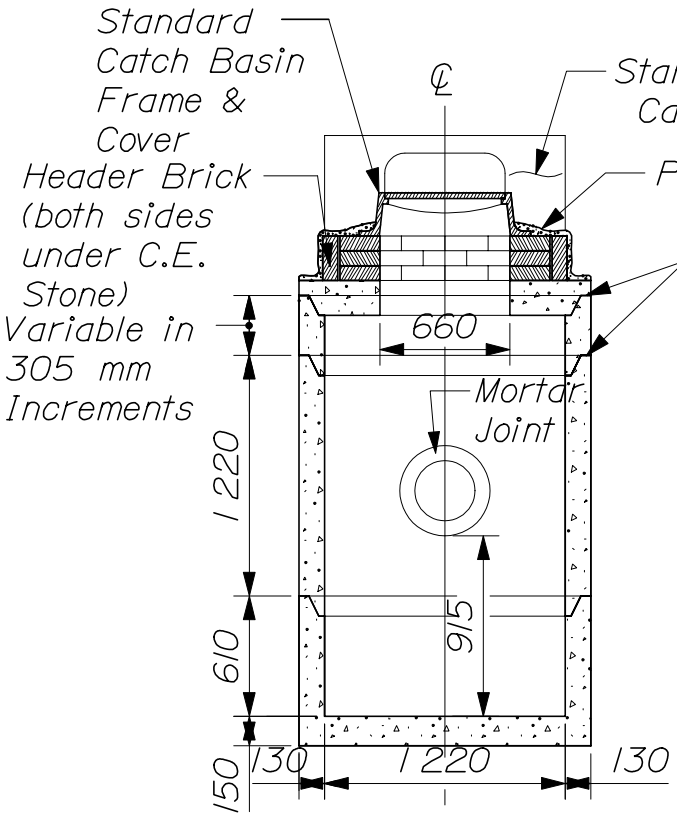

Construction Alternate "A"

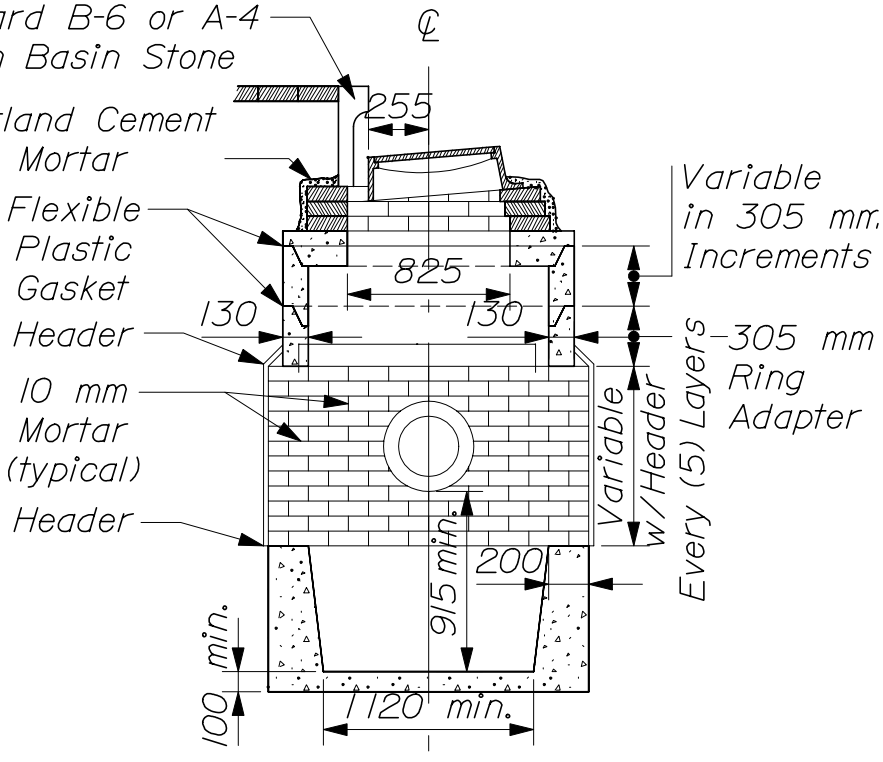

Construction Alternate "B"

REINFORCED CONCRETE CATCH BASIN

REINFORCED CONCRETE CATCH BASIN
TYPE A-I-P & TYPE B-I-P

604(13)

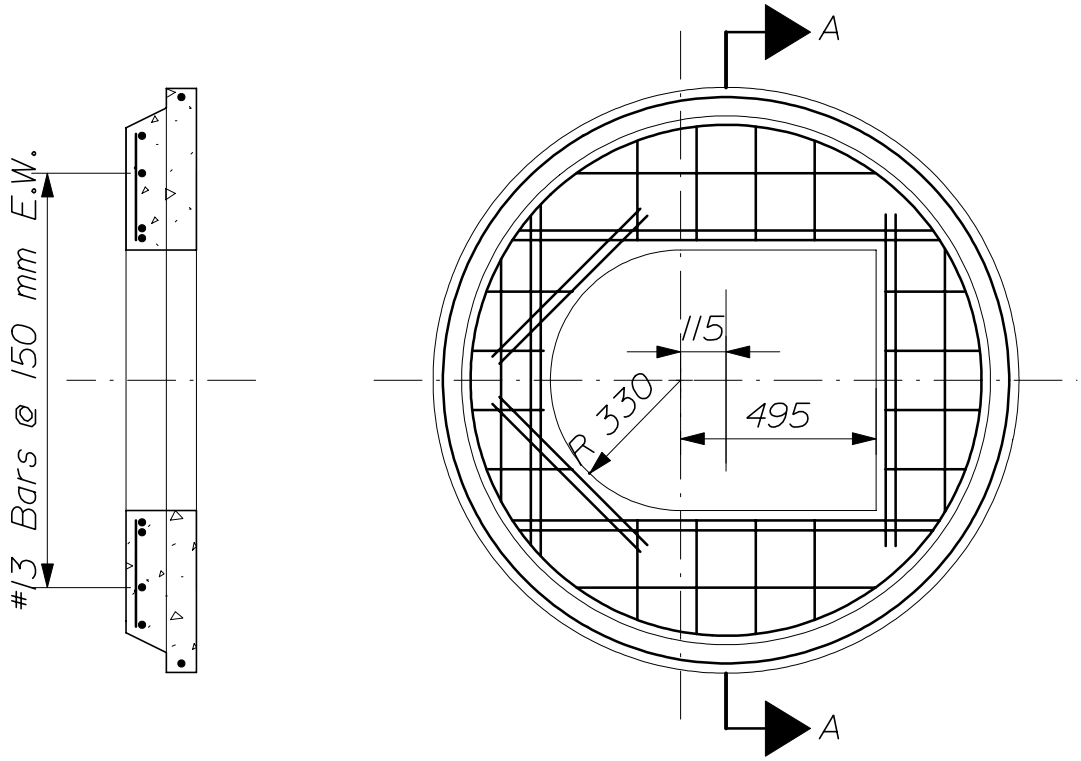

SECTION A-A

PLAN

TOP SLAB DETAIL FOR TYPE A-I-P

(not to scale)

REINFORCED CONCRETE CATCH BASIN TYPE A-I-P TOP SLAB DETAIL

604(14)

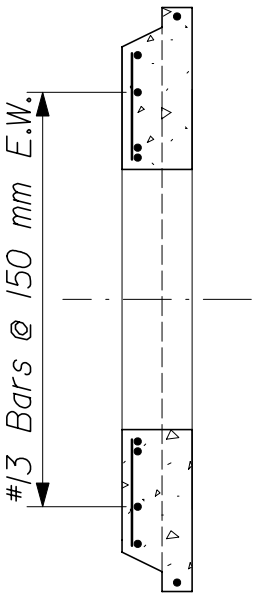

SECTION A-A

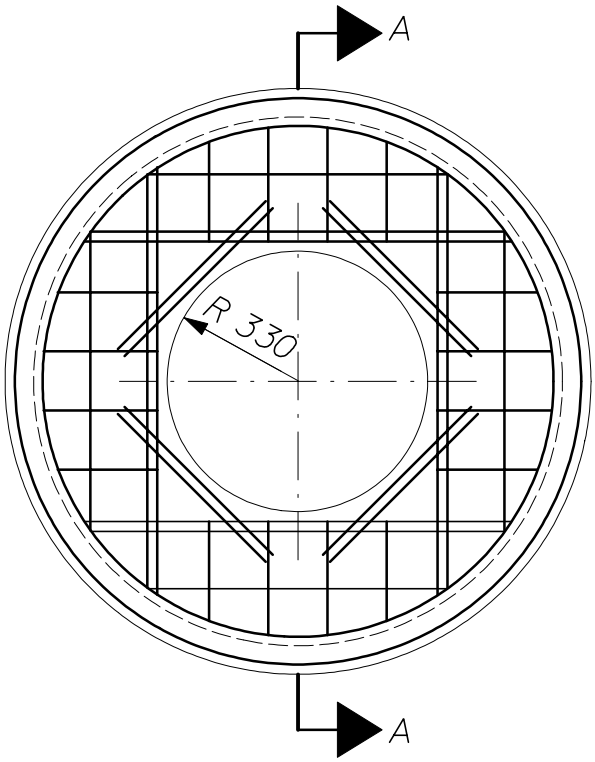

PLAN

TOP SLAB DETAIL FOR TYPE B-I-P

(NOT TO SCALE)

REINFORCED CONCRETE CATCH BASIN TYPE B-I-P TOP SLAB DETAIL

604(15)

Size	150	200	250	300	375
A	140	191	241	292	Similar to Designs at Left
B	340	381	406	432	
C	349	391	413	559	
D	137	140	152	203	
E	149	137	114	83	
F	295	349	359	394	
G	165	222	292	318	
H	184	238	314	340	

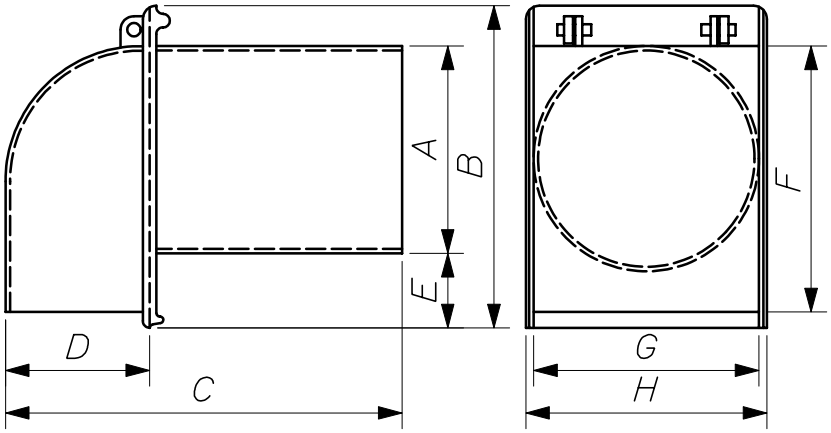

TRAP DETAIL

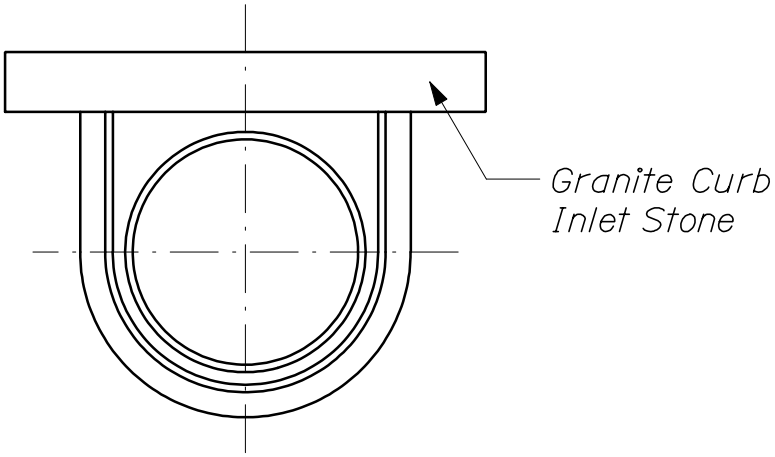

TYPE 'A' INLET

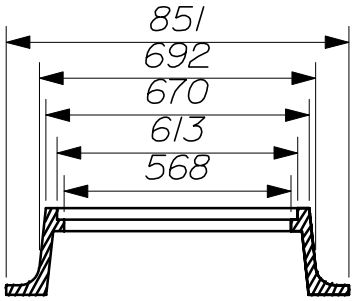

REINFORCED CONCRETE CATCH BASIN
TYPE A-1-P

604(16)

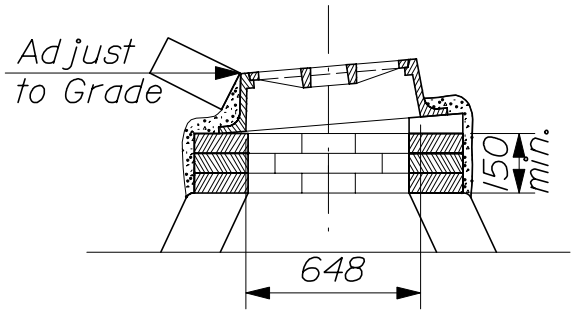

TYPE B-I-P TOP

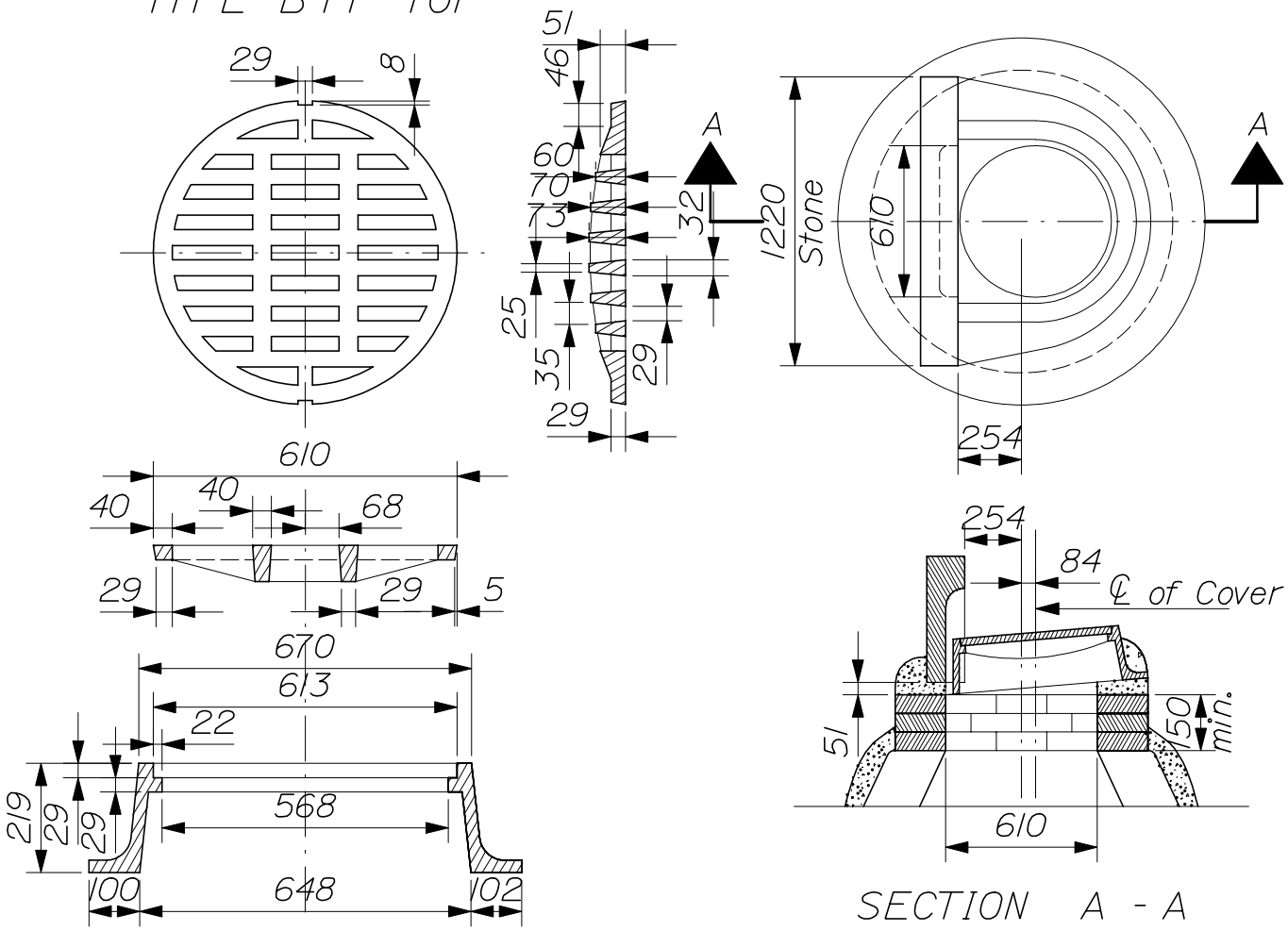

BARRED COVER & FRAME

SECTION A - A

REINFORCED CONCRETE CATCH BASIN
TYPE B-I-P DETAILS

604(17)

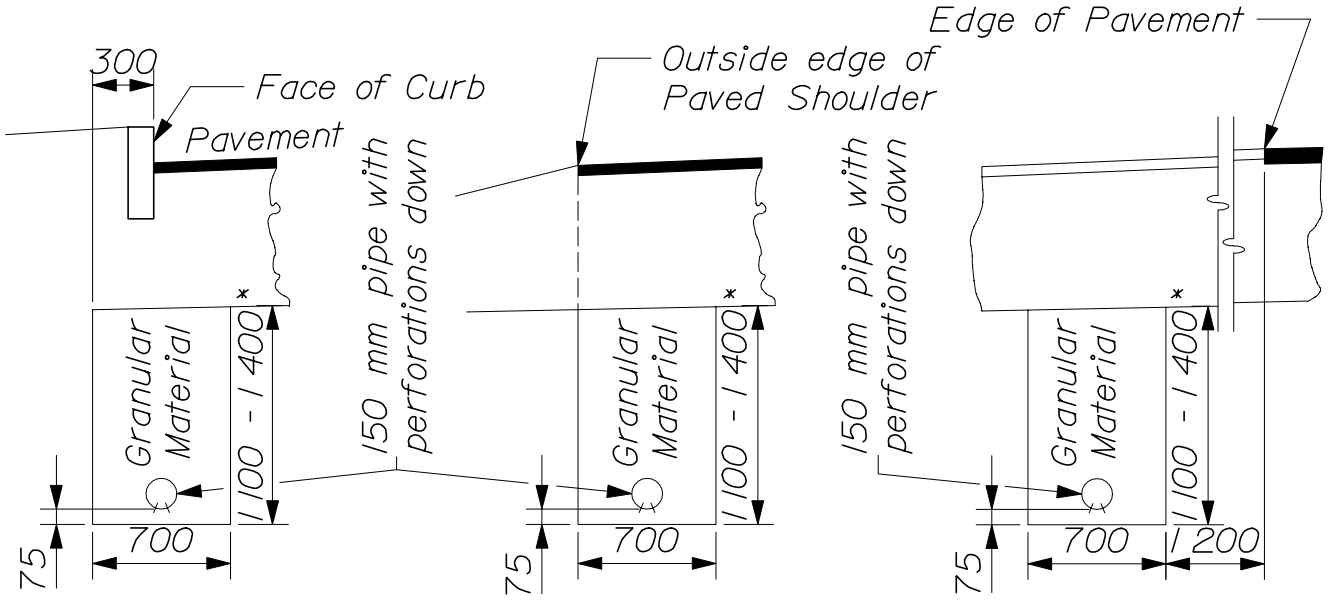

TYPE "B"
CURBED SHOULDER

TYPE "B"
PAVED SHOULDER

TYPE "B"
GRAVEL SHOULDER

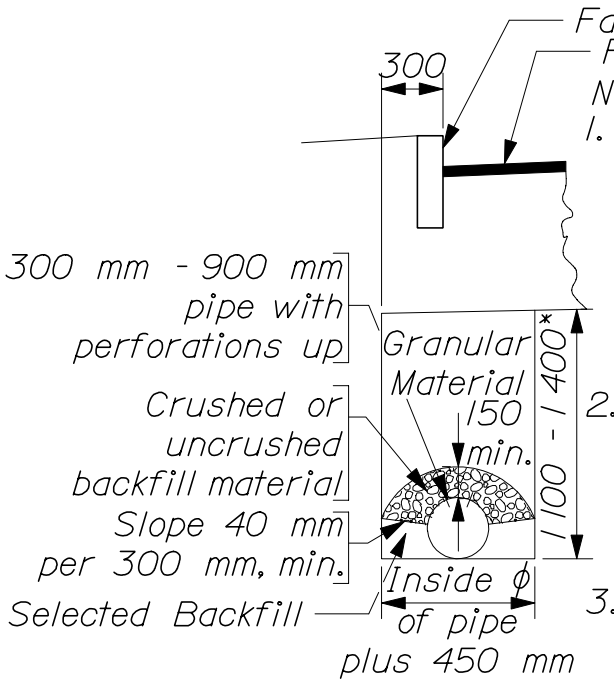

TYPE "C"

Notes:

1. The maximum vertical measurement of depth for payment of Structural Rock Excavation will be to a horizontal plane located 300 mm below the bottom of the invert of the pipe for Underdrain Type "B" and Underdrain Type "C".

2. The material for Elbows, Tees, & Wyes for Underdrain Types "B" and "C" shall be atleast as thick as the largest size pipe being connected.

3. The invert elevation of Underdrain Type "B" outlets shall be a minimum of 150 mm above the flow line of a ditch or the original ground.

4. Width of the trench for underdrain outlet will be the same as the underdrain trench.

5. No allowance for payment will be made for excavating or material excavated beyond the horizontal dimensions shown for Types "B" or "C" Underdrain.

6. In "Box Sections" the edge of the trench shall be in line with the edge of box section.

* Unless otherwise shown on the plans

UNDERDRAIN

605(01)

Type "B" and Type "C" Underdrain Pipe									
Metal Pipe (Nominal Wall Thickness)				Metal Pipe		Plastic Pipe Stiffness @ 5% Deflection			
Corrugated				Type IR 19 x 19 x 190		PVC Pipe		Polyethylene Pipe	
Diameter	M 218	M 274 & M 246	M 197	M 274	M 197	M 278	ASTM F 949	M 294 SP Dual-wall Unanchored	M 252 SP Dual-wall Unanchored
Type "B" Underdrain Pipe									
150	1.6	1.3	1.2			320	344		344
Type "C" Underdrain Pipe									
300	2.0	1.6	1.9			320		344	
375	2.0	1.6	1.9			320		289	
450	2.0	1.6	1.9	2.0	2.7			276	
525	2.0	1.6	1.9	2.0	2.7				
600	2.0	1.6	1.9	2.0	2.7			234	
750	2.8	1.6	2.7	2.0	2.7			193	
900	2.8	1.6	2.7	2.0	2.7			151	

M 218 = Zinc Coated (Galvanized) Corrugated Steel Pipe
M 274 = Aluminum Coated (Type 2) Corrugated Steel Pipe
M 246 = Polymer Pre-coated Galvanized Corrugated Steel Pipe
M 197 = Corrugated Aluminum Alloy Pipe
M 278 = Smoothwall PVC pipe
ASTM F 949 = PVC Corrugated Sewer Pipe with smooth interior
M 294 SP = Corrugated Polyethylene Pipe with smooth inner liner
M 252 SP = Corrugated Polyethylene Drainage Tubing with smooth inner liner

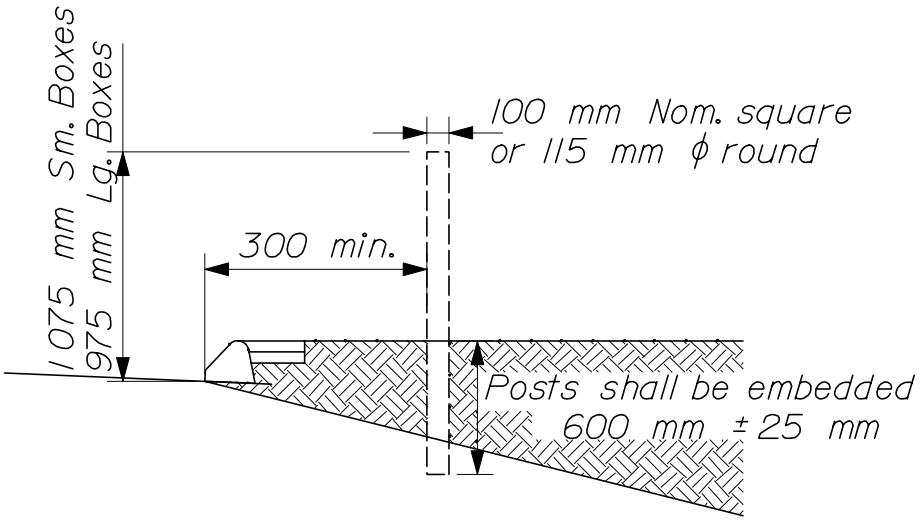

SINGLE WOOD POST

Notes:

1. A post shall be provided for each mailbox.

2. Posts shall not be spaced closer than 750 mm.

3. Posts should not be placed closer than 60 m from an intersecting road.

4. When single wood posts exceed 115 mm diameter or square dimension, two 19 mm holes shall be drilled through the post at 90 degrees to each other, 100 mm above the finish grade.

MAILBOX POSTS

606(01)

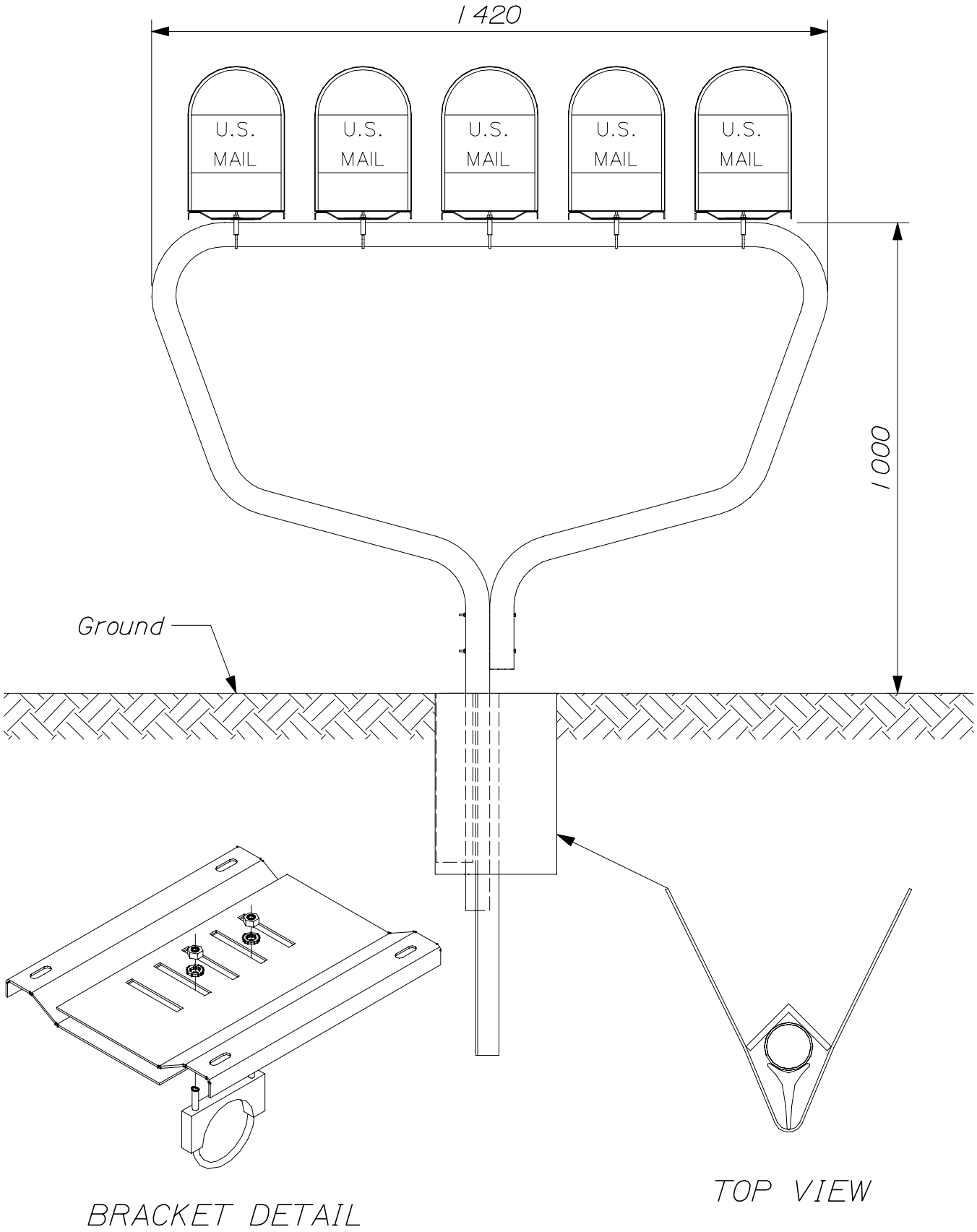

MULTIPLE MAILBOX SUPPORT

606(02)

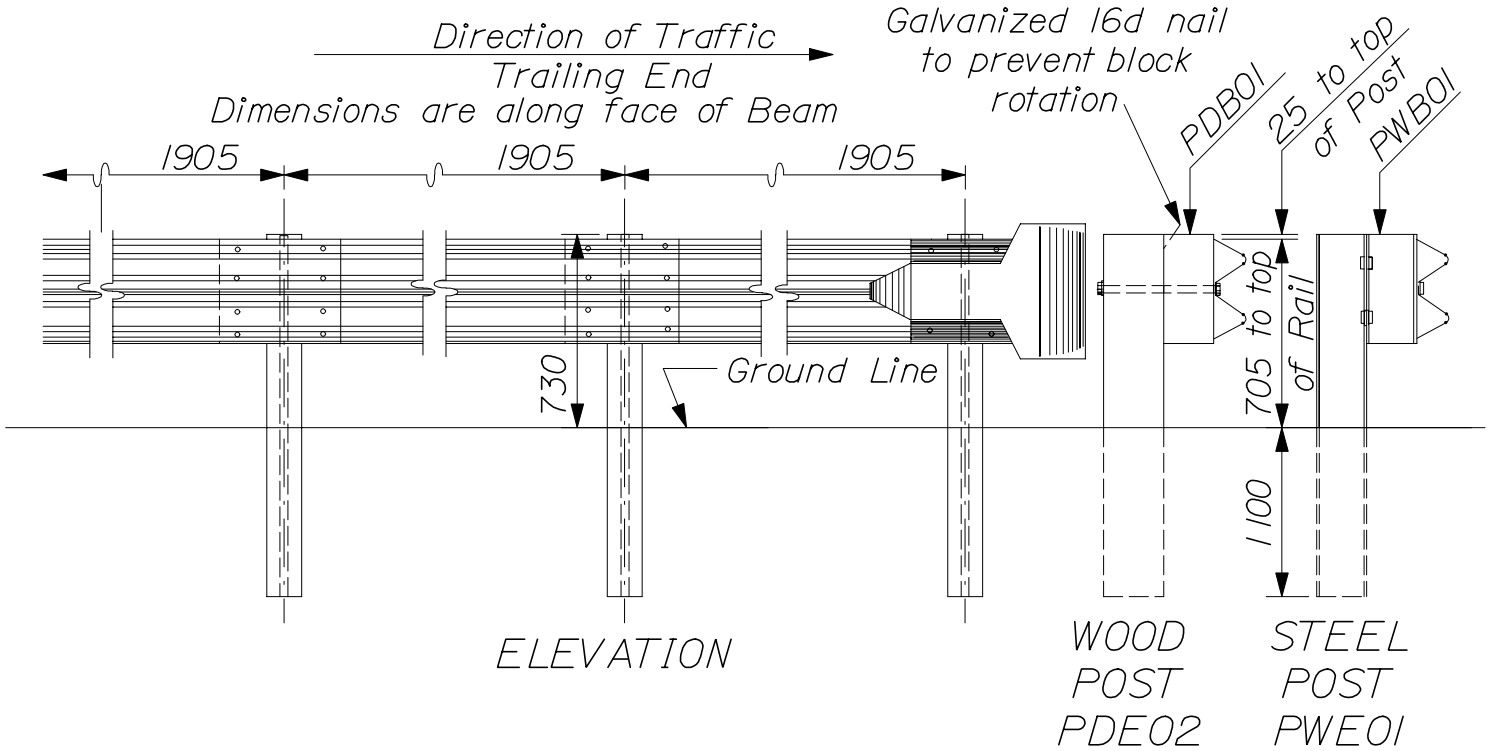

Notes:

1. Intermediate post spacing shall be 1905 mm unless otherwise shown.
2. Wood posts for Guardrail shall be 150 mm nom. (140 mm min.) x 200 mm nom. (190 mm min.) and offset blocks shall be 150 x 200 nom. (140 x 190 min.).
3. Steel posts and wood offset brackets for Guardrail shall be W150 x 13.5.
4. Steel posts punched with holes in addition to those specified to accommodate other types of Guardrail, will be accepted subject to the approval of the Resident.
5. "W" beam backup plates shall be placed behind rail elements at intermediate steel posts (non-splice posts), for Type 3b only.
6. Beam type Guardrail set on a radius of 45 m or less shall be circular Guardrail.
7. Offset bracket shall be installed on all posts.
8. Guardrail Terminal End (RWE03A) to be used only on trailing end of Guardrail on divided highway. Washers (FWR03) shall be installed on the last 9 posts.
9. Identification letters and numbers on drawings refer to the standard detail drawings shown in "A guide to Standardized Highway Barrier Hardware" by AASHTO-AGC-ARTBA Joint Committee.

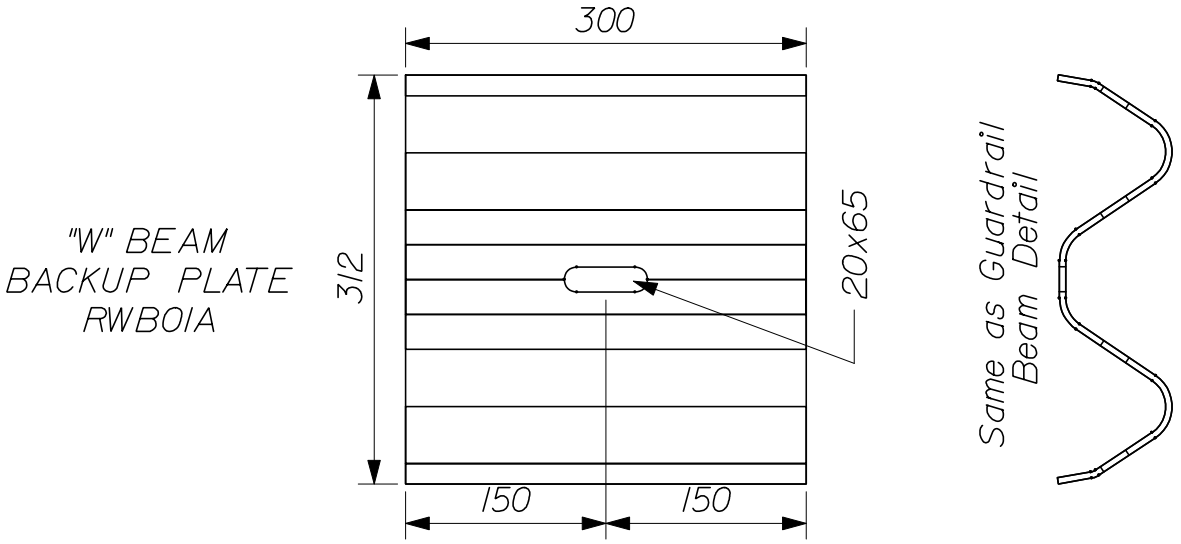

GUARDRAIL

606(03)

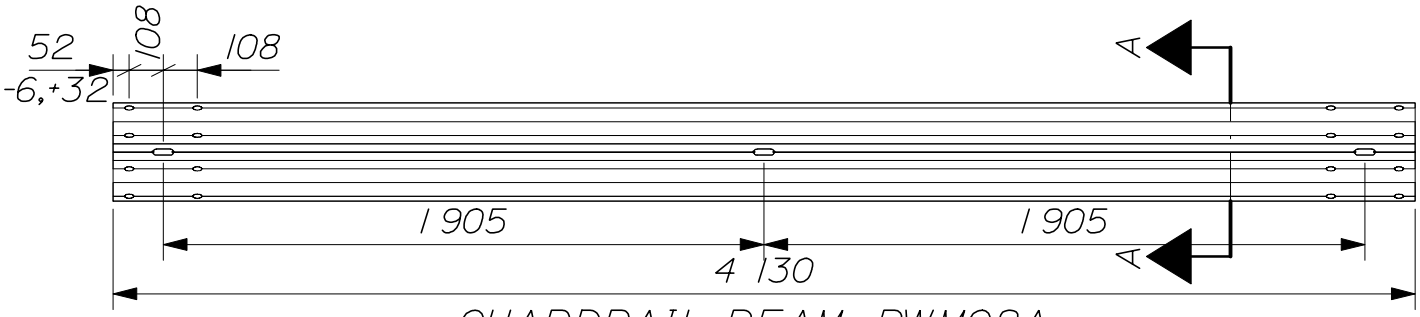

GUARDRAIL BEAM RWM02A
Minimum thickness 2.67 mm

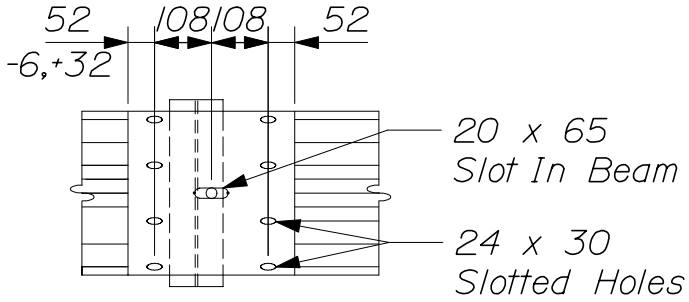

GUARDRAIL SPLICE
AT POST

Note:
All dimensions subject to manufacturing tolerances

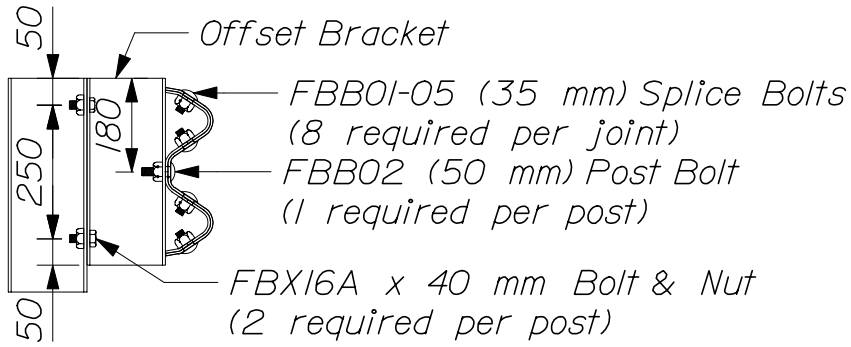

CROSS SECTION THROUGH
GUARDRAIL SPLICE

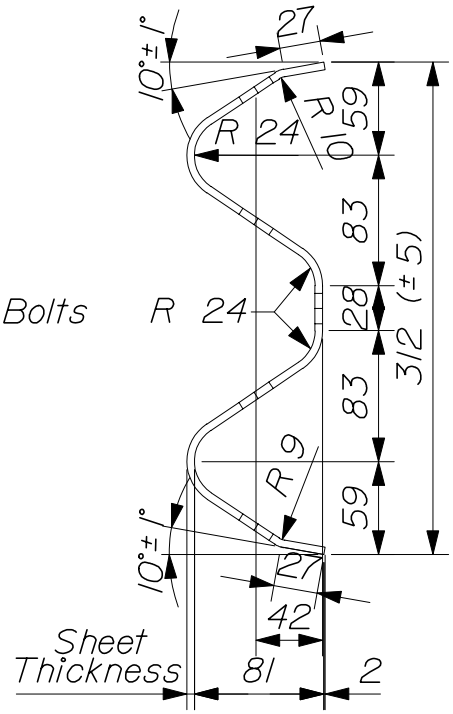

SECTION A - A
GUARDRAIL BEAM
DETAIL RWM02A

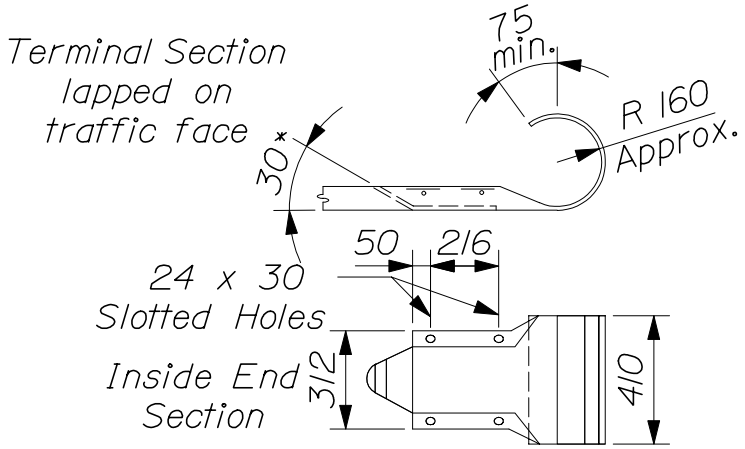

GUARDRAIL TERMINAL END - RWE03A
(See 606(03) Note #8)

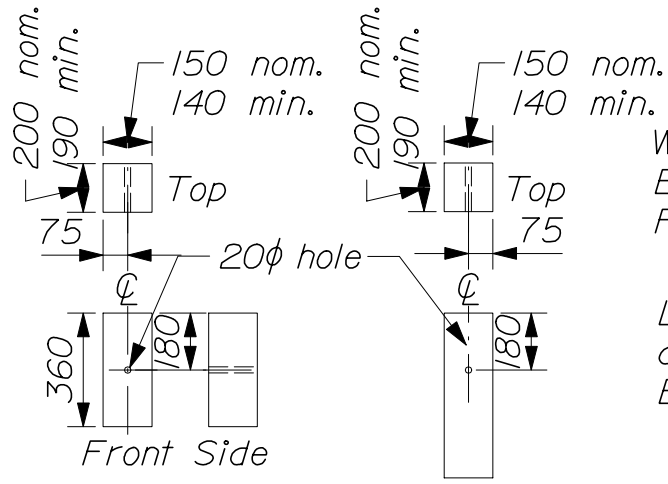

Wood Post, Offset Bracket, and G.R. Beam shall be bolted with one Bolt FBB04 and Washer FWC16A under nut.

Location of hole for attaching Wood Offset Bracket to Wood Post

WOOD OFFSET BRACKET PDB01

WOOD POST PDE02

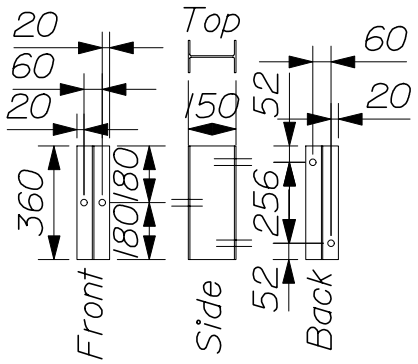

STEEL OFFSET BRACKET PWB01

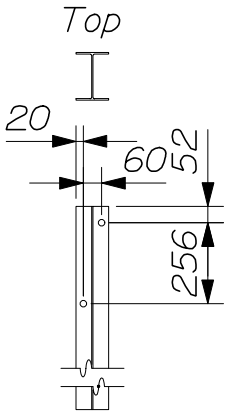

Steel Offset Bracket and Post shall be bolted with (2) FBX16A Bolts and Nuts. Holes to be 20 ϕ.

Location of holes for attaching bracket to Steel Post

STEEL POST PWE01

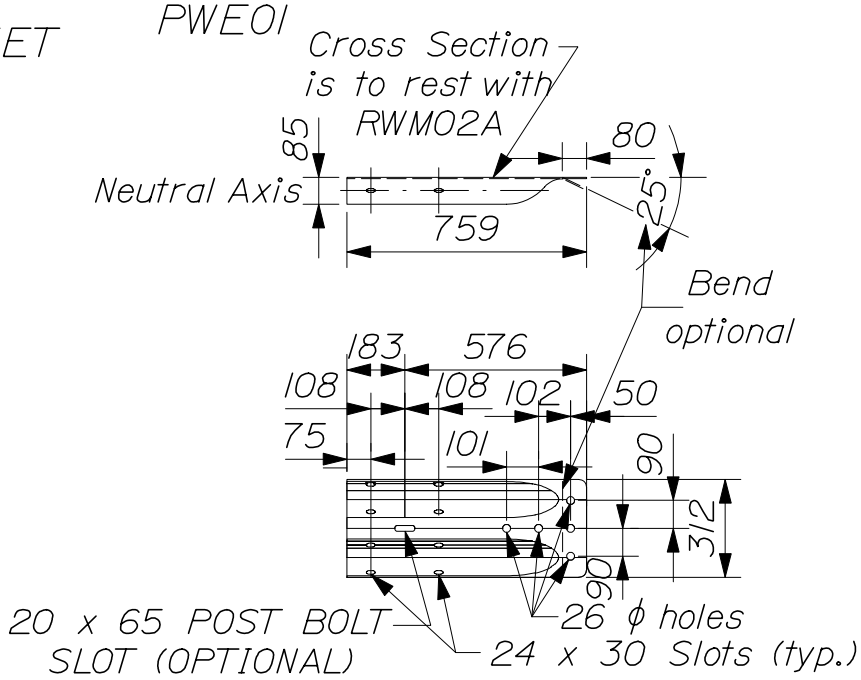

W-BEAM TERMINAL CONNECTOR RWE02A

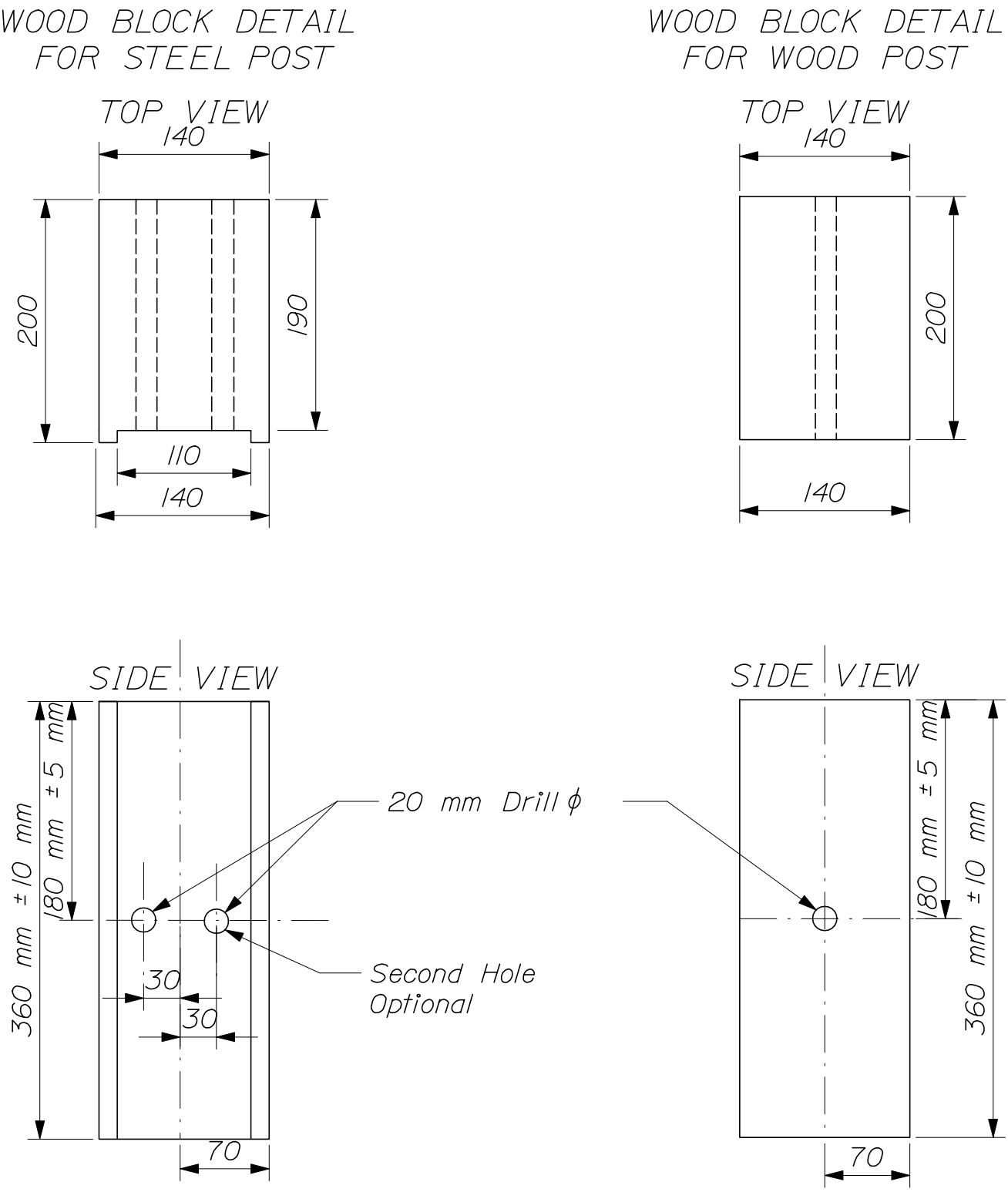

WOOD BLOCK DETAIL FOR STEEL OR WOOD POST

606(06)

Reflectorized Beam Guardrail Delineators shall be mounted on all guardrails. The delineators shall be mounted on the guardrail beam at guardrail posts. Delineators shall be placed at approximately 20 m intervals or every tenth post on tangents and at approximately 10 m intervals or every fifth post on curves. On divided highways, the left hand delineators should be yellow and the right hand delineators should be silver-white. On two directional highways, both sides shall be silver. Reflectorized Beam Guardrail Delineators shall meet the requirements of Standard Specification Section 719.01. Delineators shall be fabricated with steel conforming to ASTM A 635/A 635 M, galvanized in accordance with AASTHO M111 (ASTM A 123) with a minimum thickness of 2.8 mm (12 guage). Beam Guardrail Delineators will not be paid for directly, but will be considered incidental to the guardrail items. Exact locations of the delineators shall be as directed by the Resident.

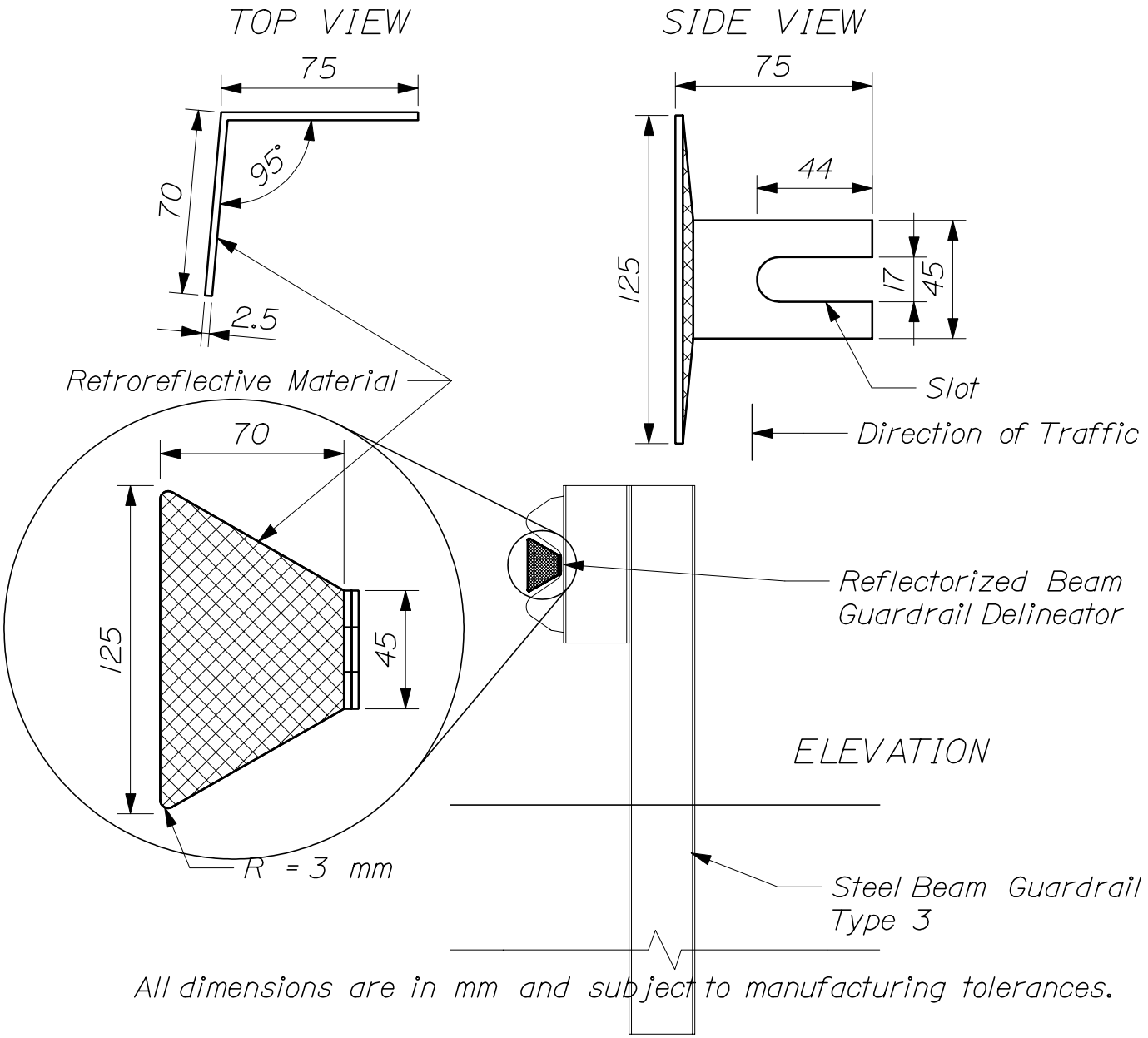

All dimensions are in mm and subject to manufacturing tolerances.

REFLECTORIZED BEAM GUARDRAIL DELINEATOR DETAILS

606(07)

M.E.L.T. NOTES

1. For description and specification of part identified "ARTBA..." see report prepared and approved by the AASHTO-AGC-ARTBA Joint Cooperative Committee, "A Guide to Standardized Highway Barrier Hardware".

2. All angles, channels, and plates shall conform to the requirements of A.S.T.M. A36 and structural tubing to A.S.T.M. A500 or A.S.T.M. A513, Grade 1008. Diaphragm Plate shall conform to A.S.T.M. A36 or AASHTO M-180. Welding shall meet the current requirements of the American Welding Society Structural Welding Code ANSI/AASHTO/ AWS D1.5. All structural steel shall be galvanized in accordance with A.S.T.M. A123. No punching, drilling, cutting, or welding will be permitted after galvanizing.

3. Short wooden breakaway post shall be made of S4S Timber with a stress grade of 8 MPa and shall be grade marked or certified by a recognized association or agency which is certified by the Board of Review, American Lumber Standards Committee, to grade the species. It shall receive a preservative treatment in accordance with AASHTO designation M-133.

4. Optional holes are for insertion of Nose Expansion Block when required.

5. The post offset dimensions are given to the center of the traffic face of the blockouts, except at the first post where the dimension is to the center of the traffic face of the post. Offset points are to be located by chord measurements at the back of rail equal to the nominal post spacing shown. Posts are to be set approximately radial to the railing at each post location.

6. 300 mm x 900 mm Type III Retroreflective Adhesive Sheeting shall be applied to the approach Buffer End Section after curving, but prior to the installation of Button Head bolts as follows: W = White Sheeting, Y = Yellow Sheeting, X = No Sheeting.

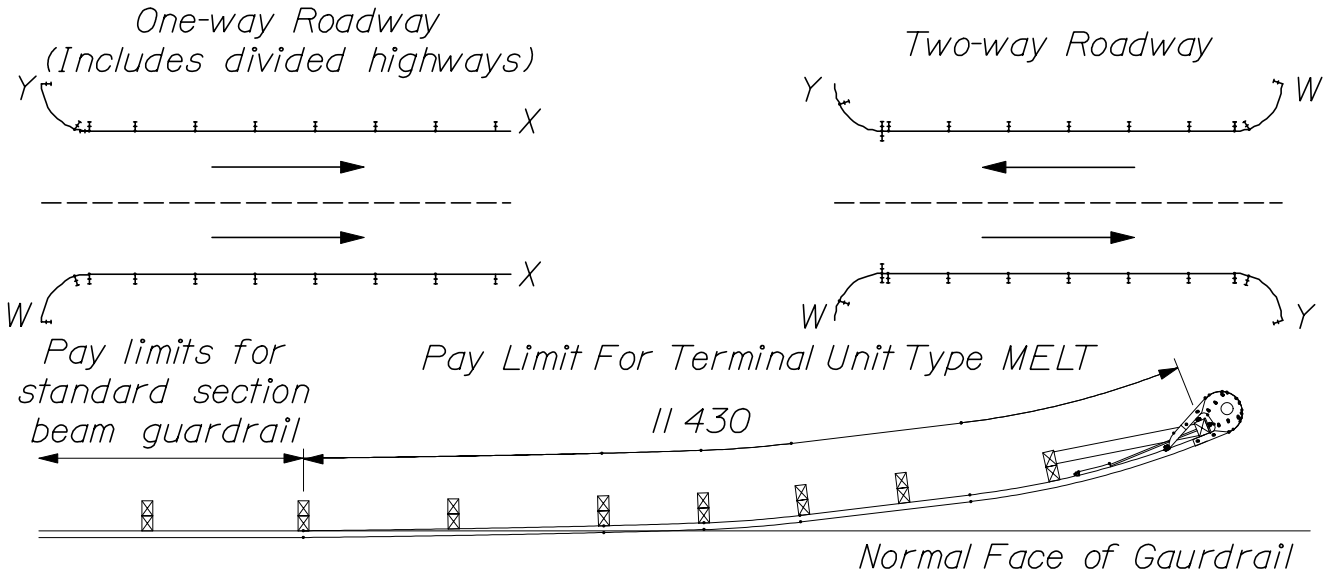

MODIFIED ECCENTRIC LOADER TERMINAL

606(08)

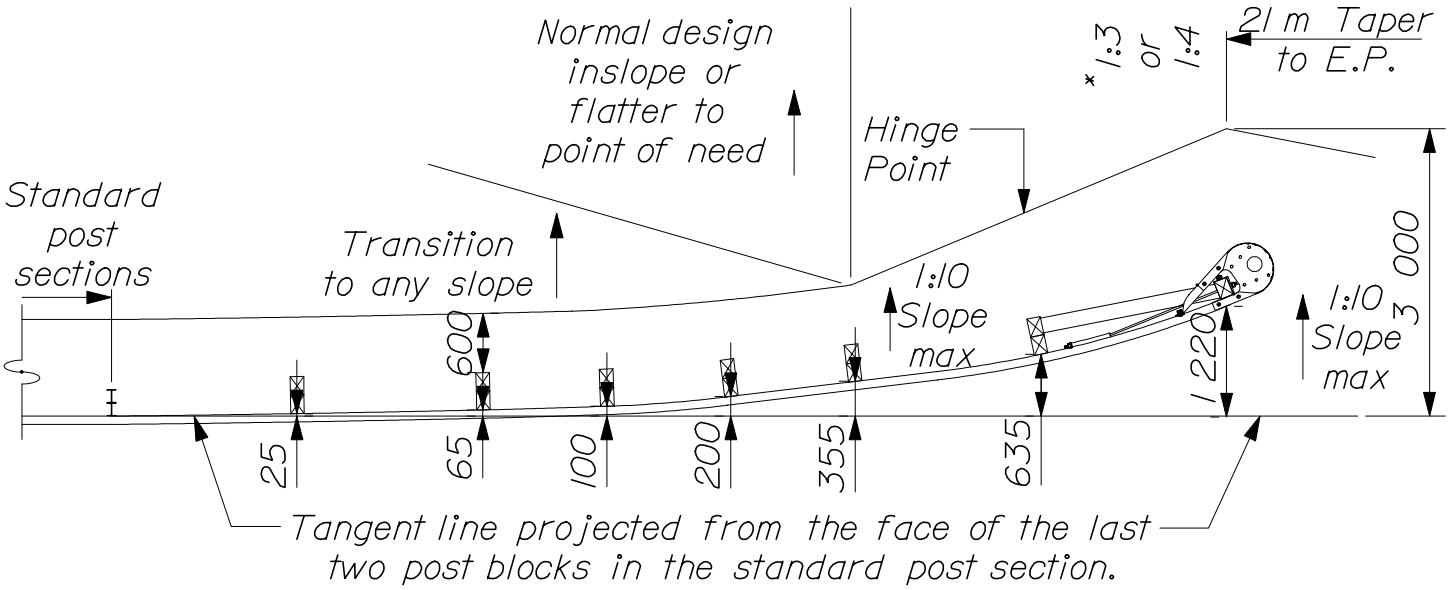

* Match normal design inslope

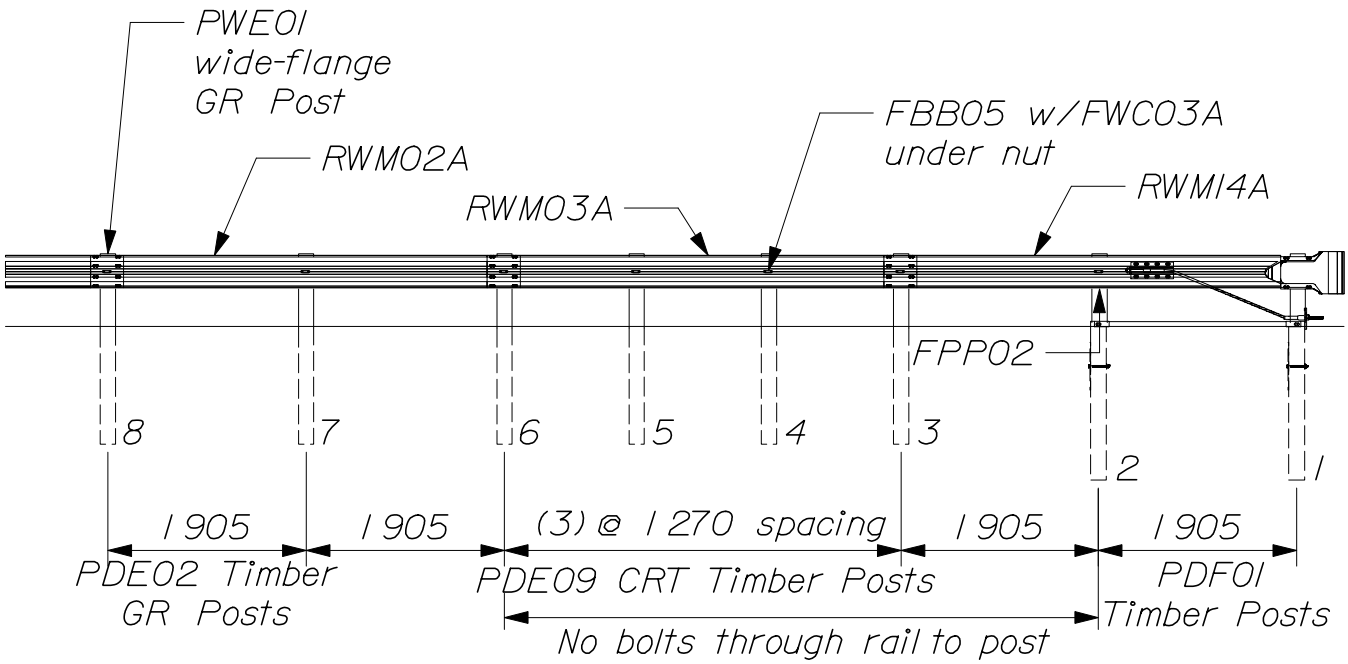

M.E.L.T. POST LAYOUT

606(09)

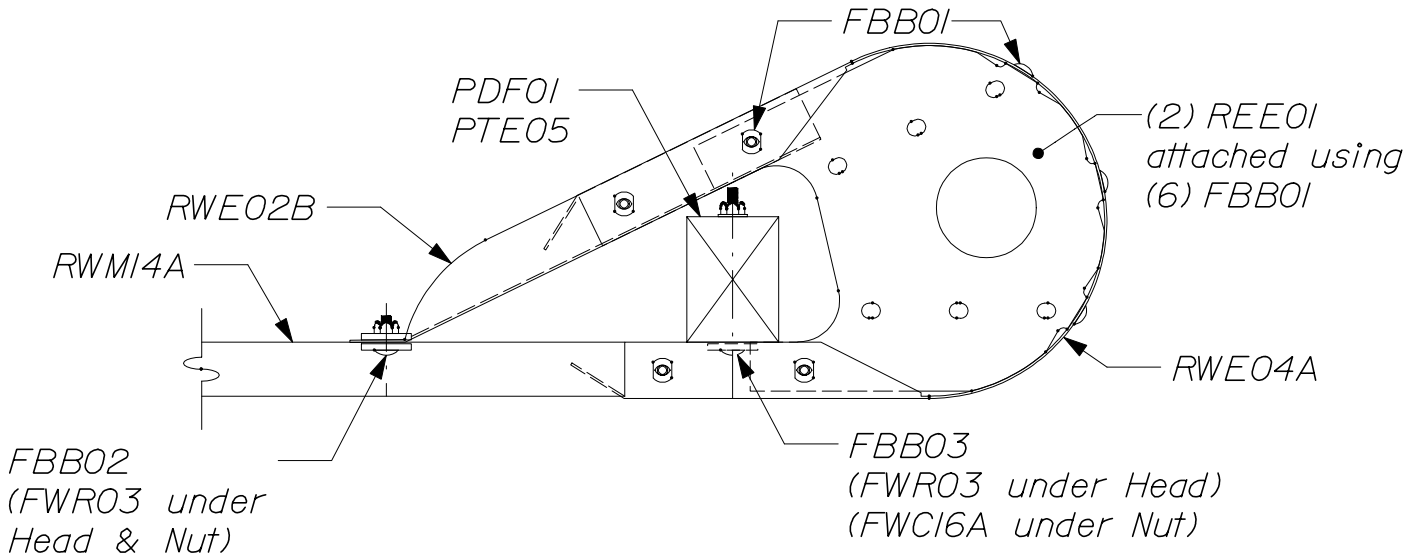

BUFFERED END ASSEMBLY

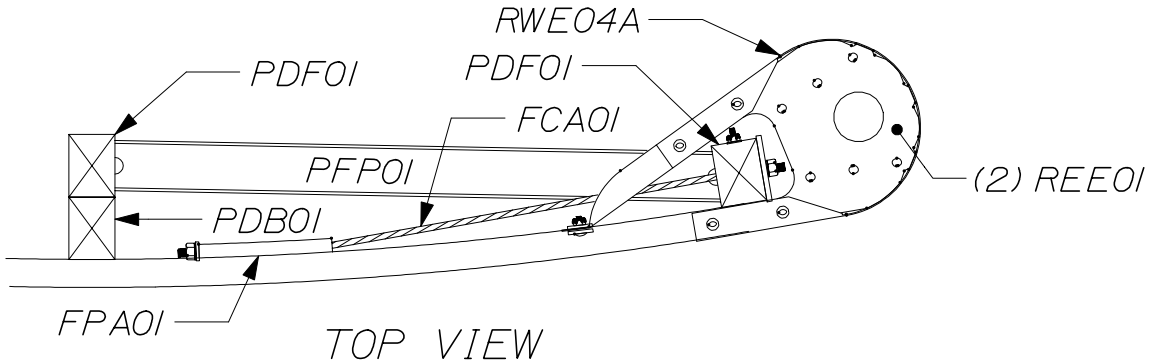

TOP VIEW

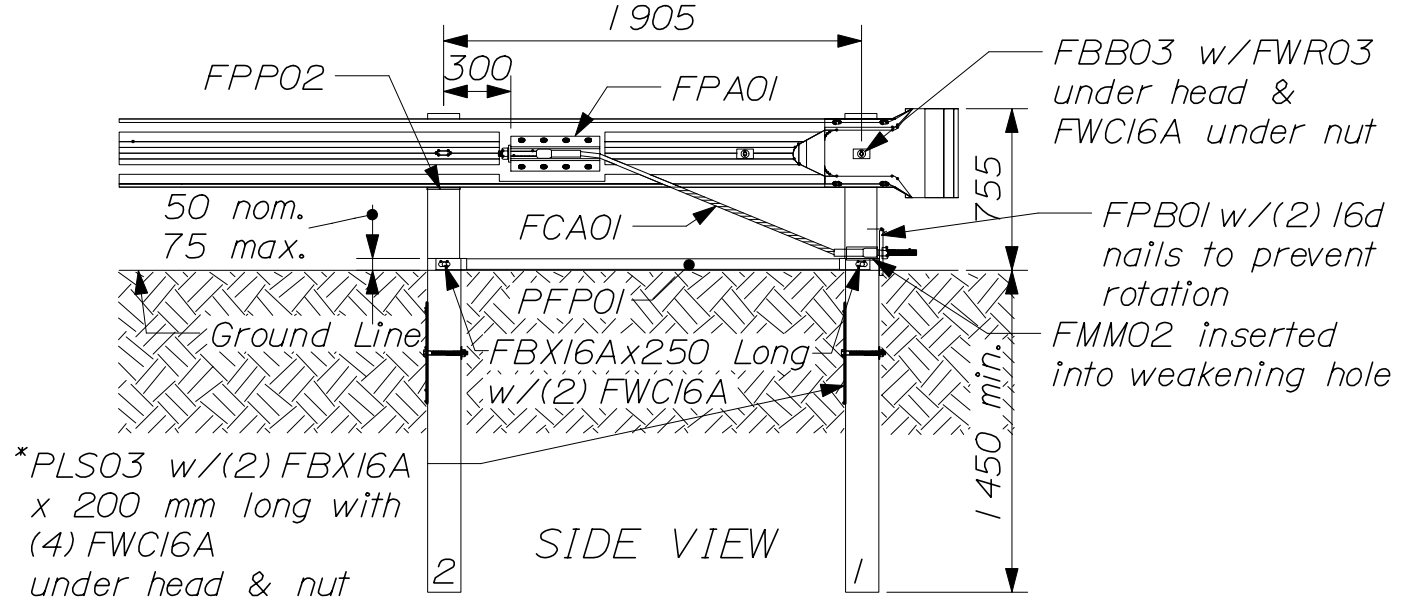

SIDE VIEW

PDF01 Timber Post inserted into PTE05 Foundation Tube Posts No. 1 & 2. Post edges may require beveling below the 22 mm hole to allow the post to fit into the steel foundation tube.

*The PLS03 Soil Plates at Posts 1 & 2 may be eliminated if 1 830 mm (6') foundation tubes are used at Post 1 & 2.

M.E.L.T. TERMINAL

606(10)

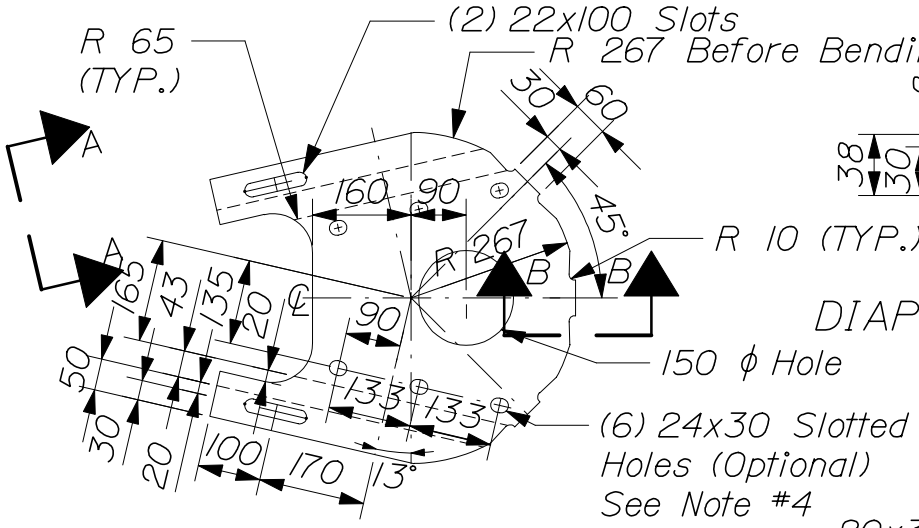

REE01 DIAPHRAGM PLATE
(2 REQUIRED EACH TERMINAL)

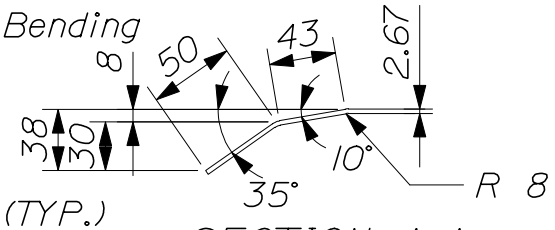

SECTION A-A
DIAPHRAGM PLATE DETAIL

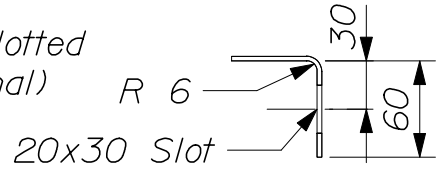

SECTION B-B
DIAPHRAGM PLATE DETAIL
ELEVATION

PLAN

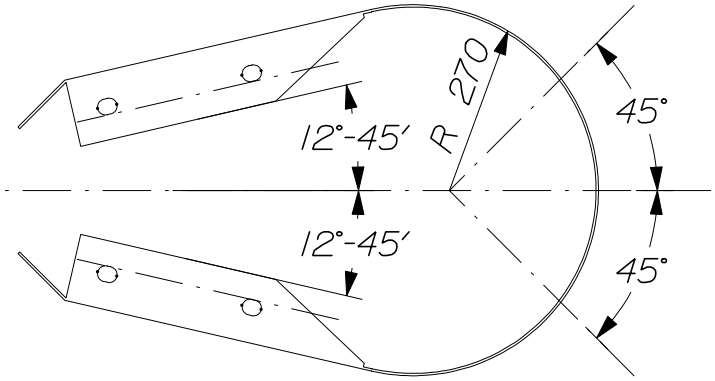

RWE04A
W-BEAM END SECTION

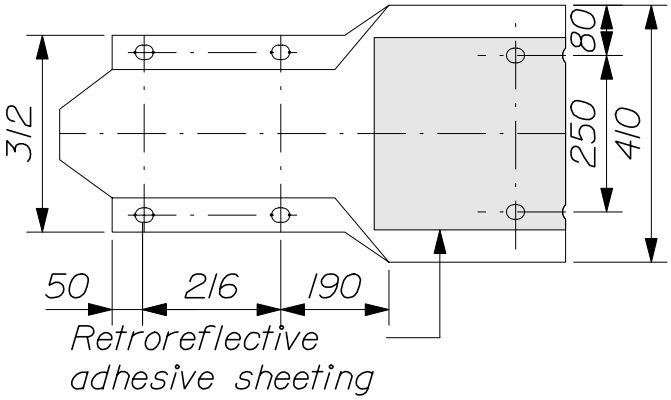

RWE04A
W-BEAM END SECTION

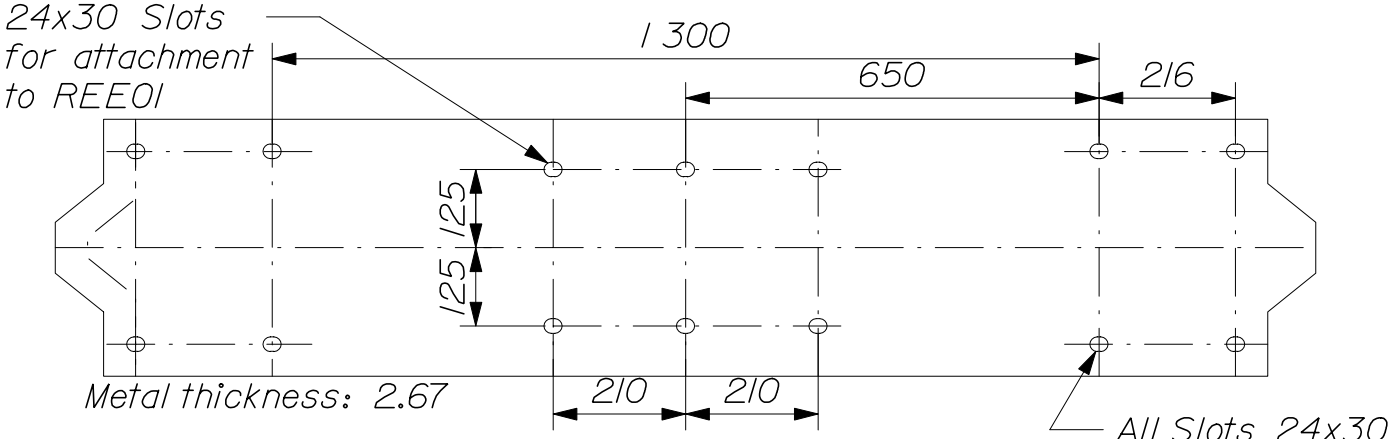

RWE04A W-BEAM END SECTION
FLAT PLATE LAYOUT

BUFFERED END ASSEMBLY

606(11)

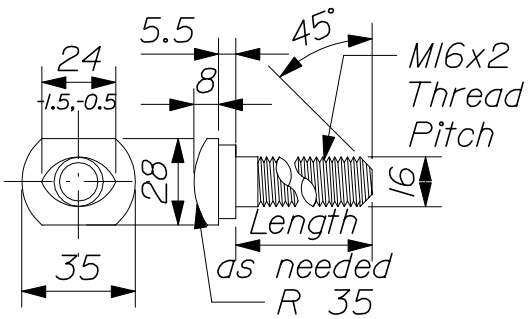

FBB01-05 BOLT

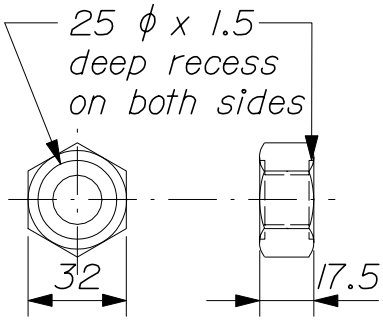

NUT FOR FBB01-05

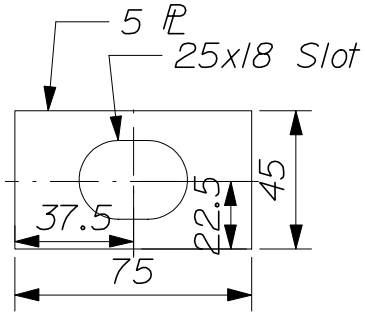

FWR03 WASHER

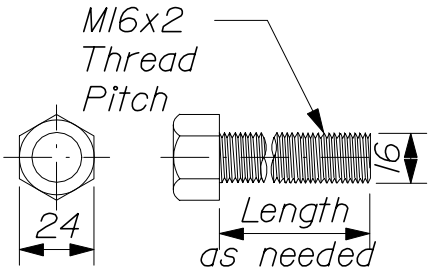

FBX16A BOLT

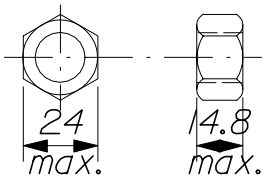

NUT FOR FBX16A

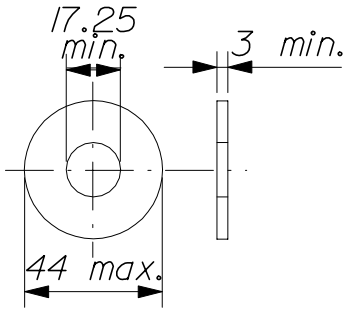

FWC16A WASHER

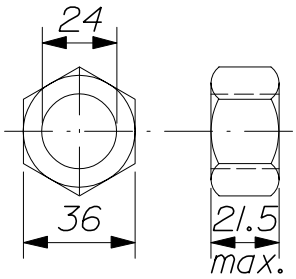

FNX24A NUT

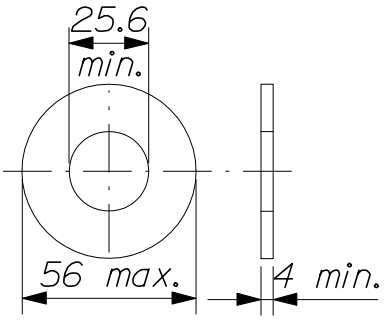

FWC24A WASHER

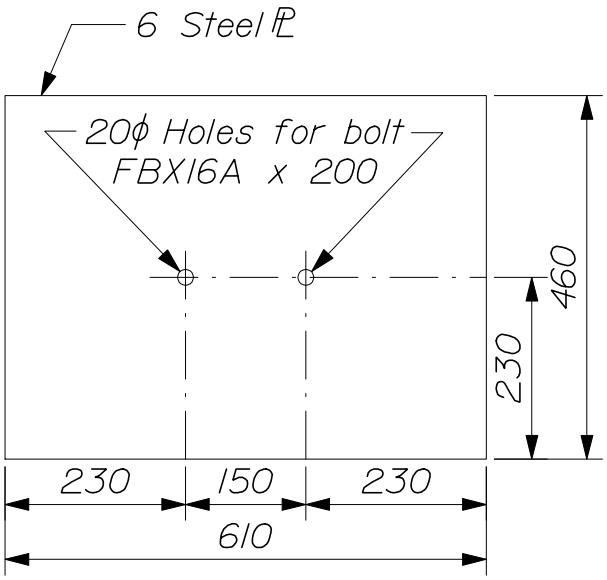

PLS03 SOIL PLATE
POSTS 1 & 2 (2 REQ.)

FPB01
BEARING
PLATE

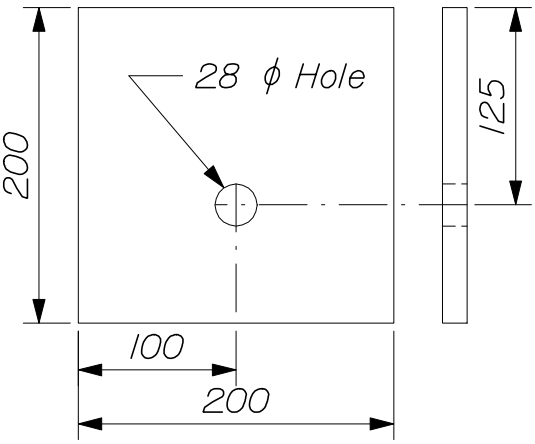

M.E.L.T. HARDWARE

606(12)

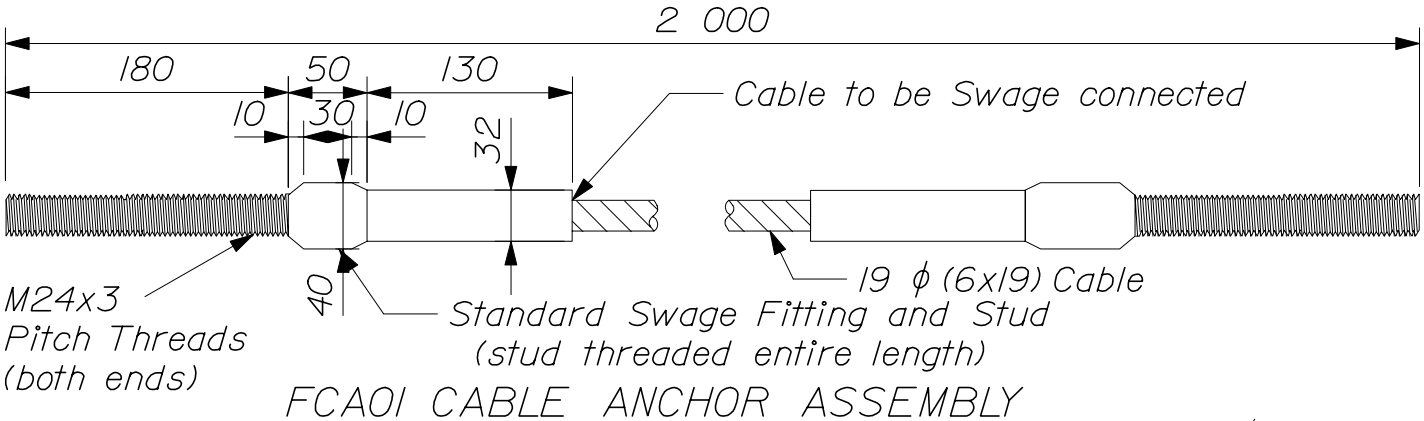

FCA01 CABLE ANCHOR ASSEMBLY

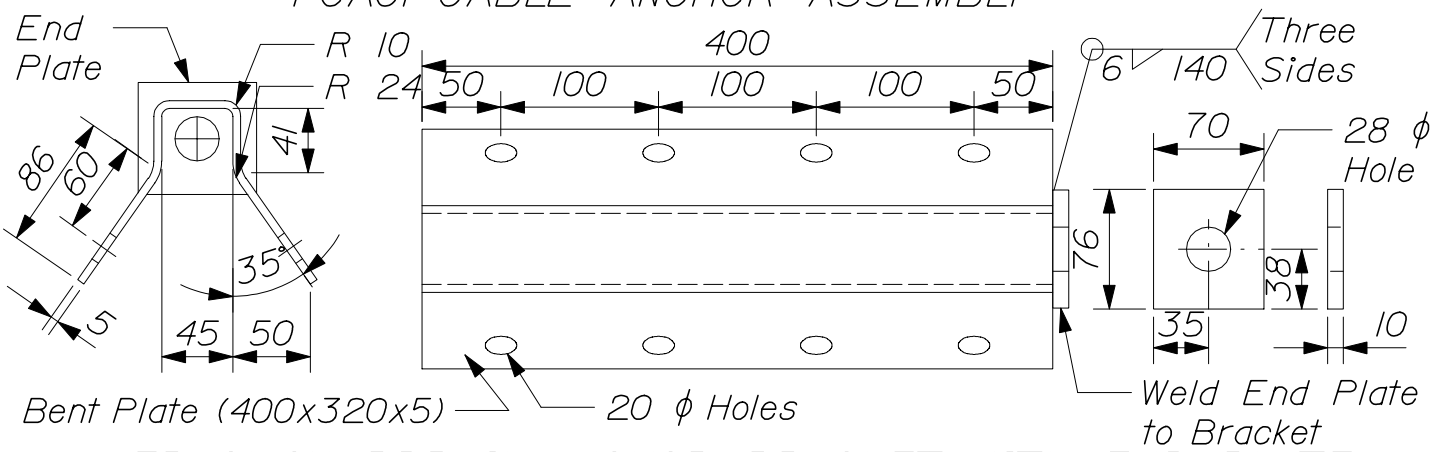

FPA01 GUARDRAIL ANCHOR BRACKET WITH END PLATE

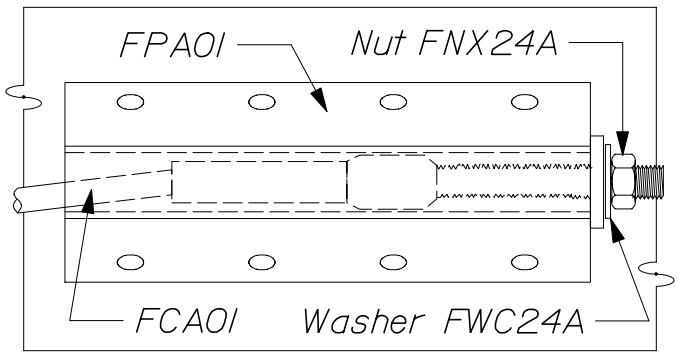

Side View

ANCHOR PLATE ASSEMBLY

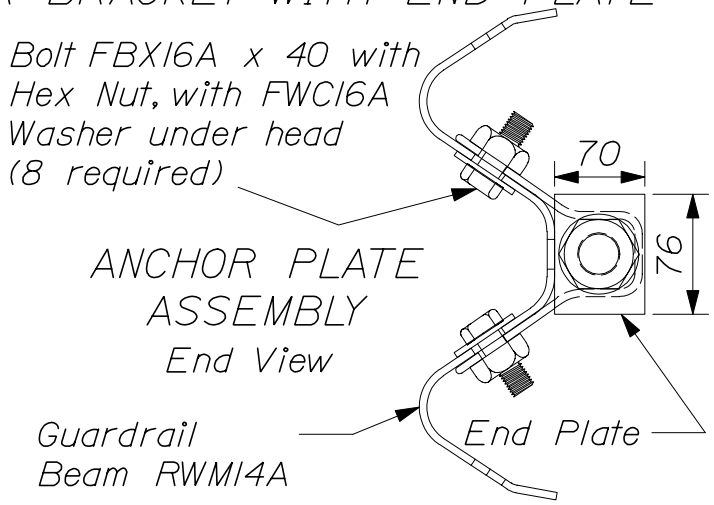

ANCHOR PLATE ASSEMBLY
End View

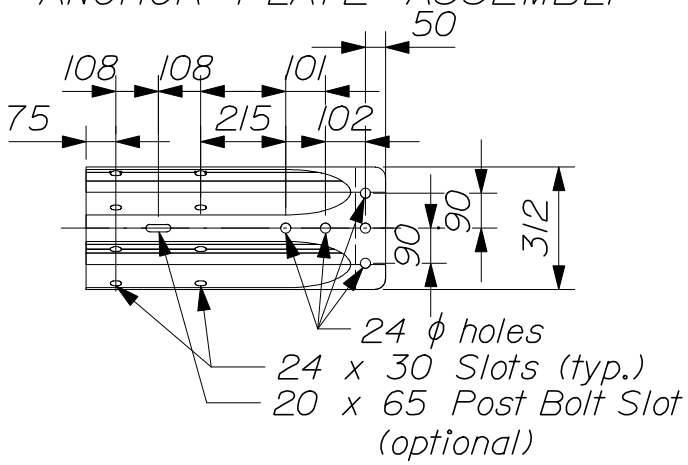

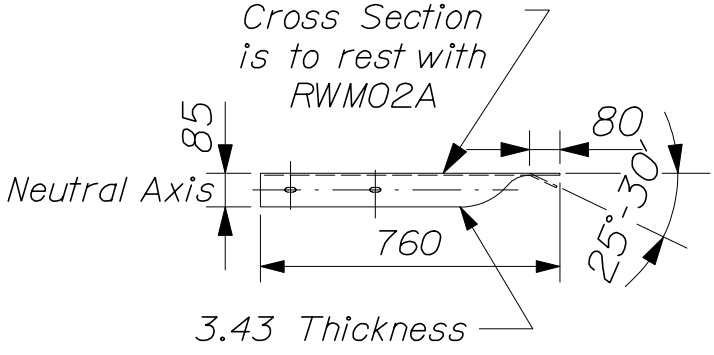

W-BEAM TERMINAL CONNECTOR RWE02B

M.E.L.T. HARDWARE

606(13)

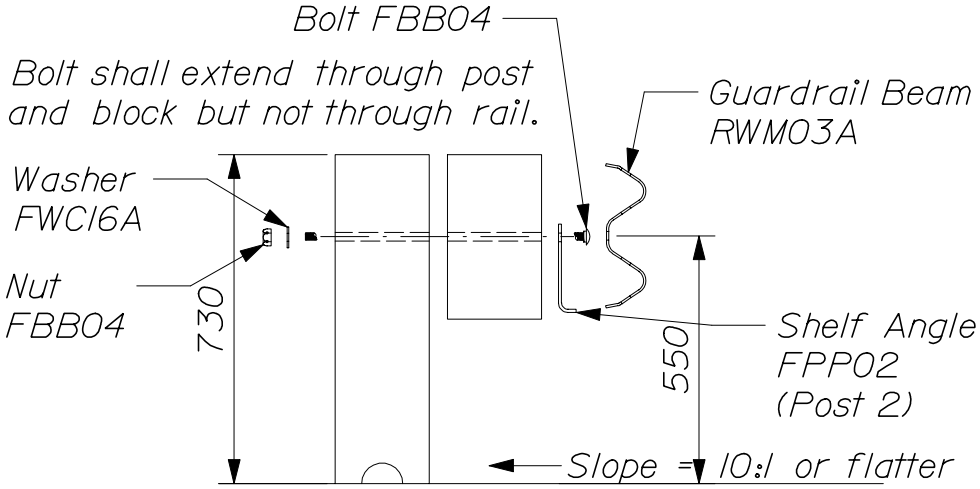

BREAKAWAY LINE POST AND BLOCK
PDE09 (4 required)

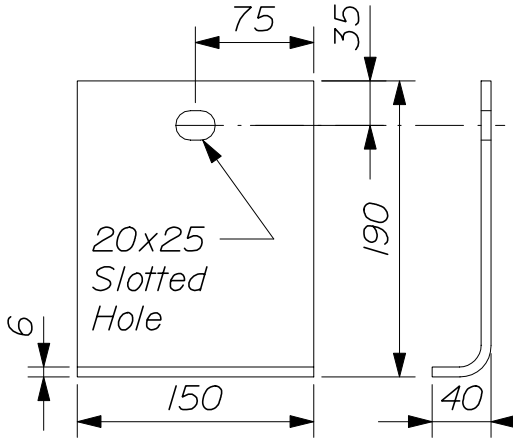

FPP02 SHELF ANGLE BRACKET AT POST #2
(1 required)

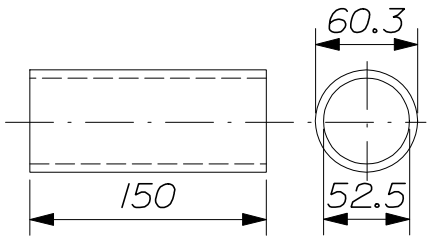

FMM02 POST SLEEVE
(post 1 only)

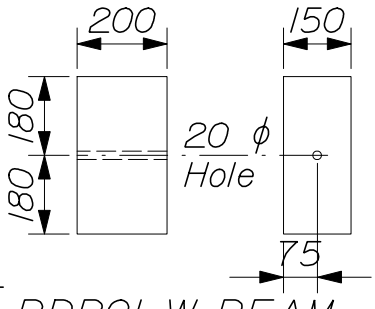

PDB01 W-BEAM TIMBER BLOCKOUT
(7 required)

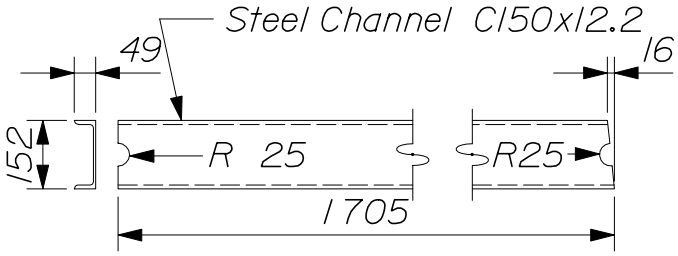

STRUT DETAILS

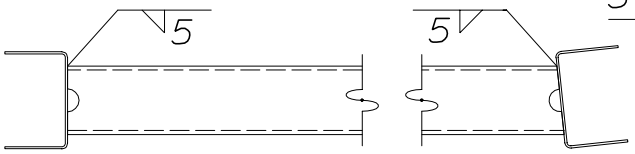

PFP01 STRUT & YOKE ASSEMBLY
Shown legs up. For opposite hand, install legs down.

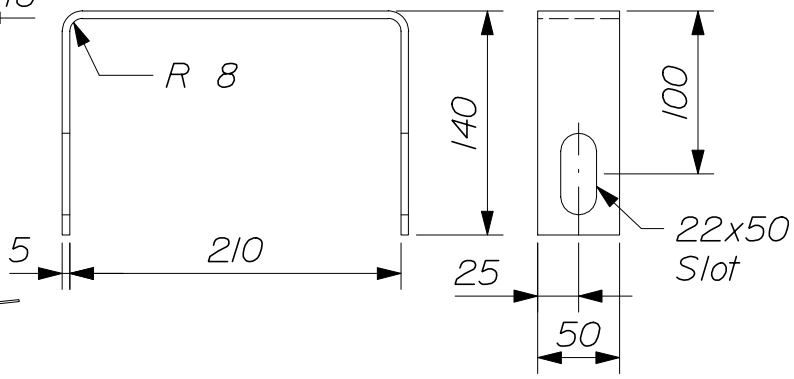

YOKE DETAILS
(2 required)

POST, YOKE & STRUT ASSEMBLY

606(14)

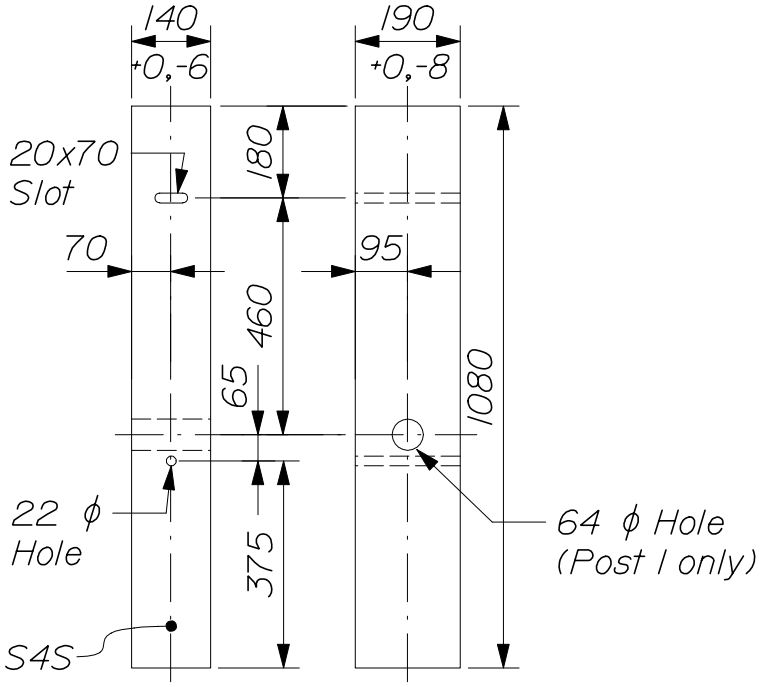

PDF01 TIMBER POST
Posts 1 & 2 (2 req.)

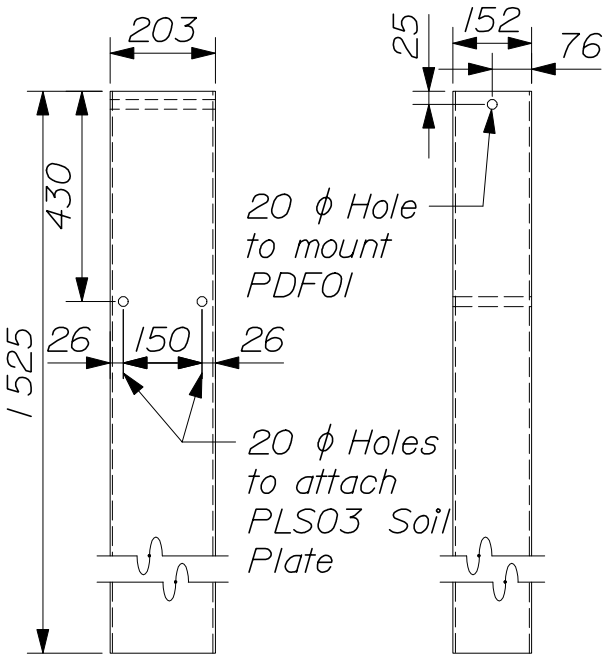

PTE05 FOUNDATION TUBE
For Posts No. 1 & No. 2
TS-203x152x4.8 (2 req.)

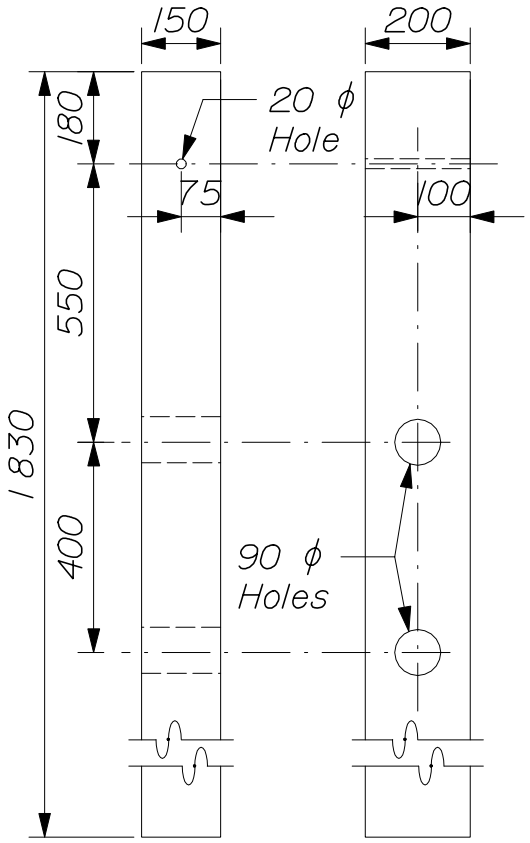

PDE09 CRT TIMBER POST
(4 required)

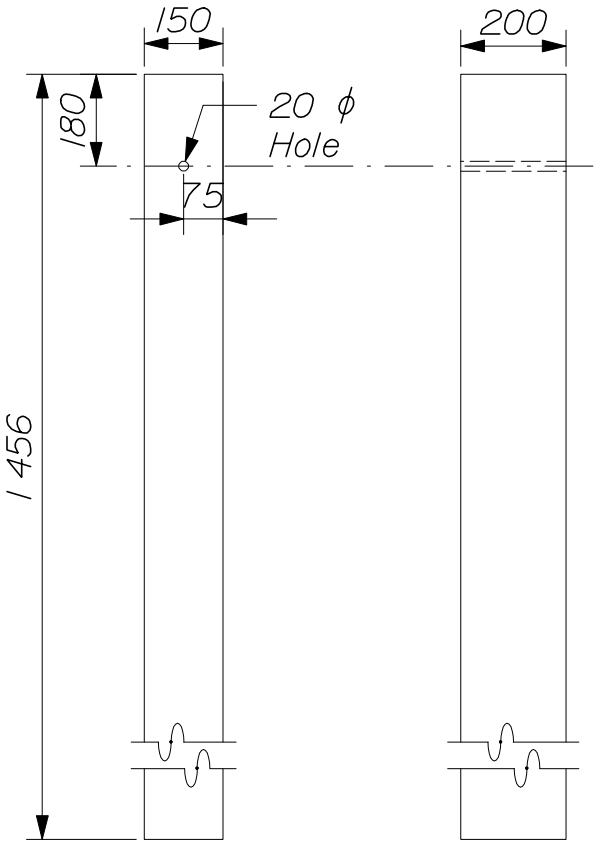

PDE02 TIMBER GR POST
(1 required)

M.E.L.T. POST DETAILS

606(15)

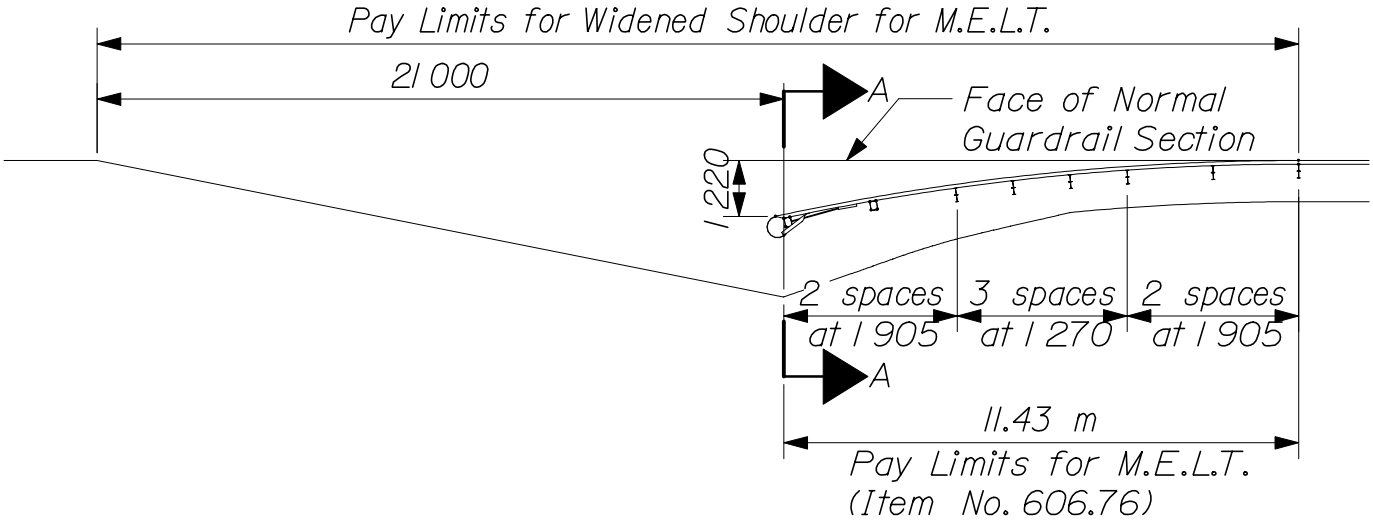

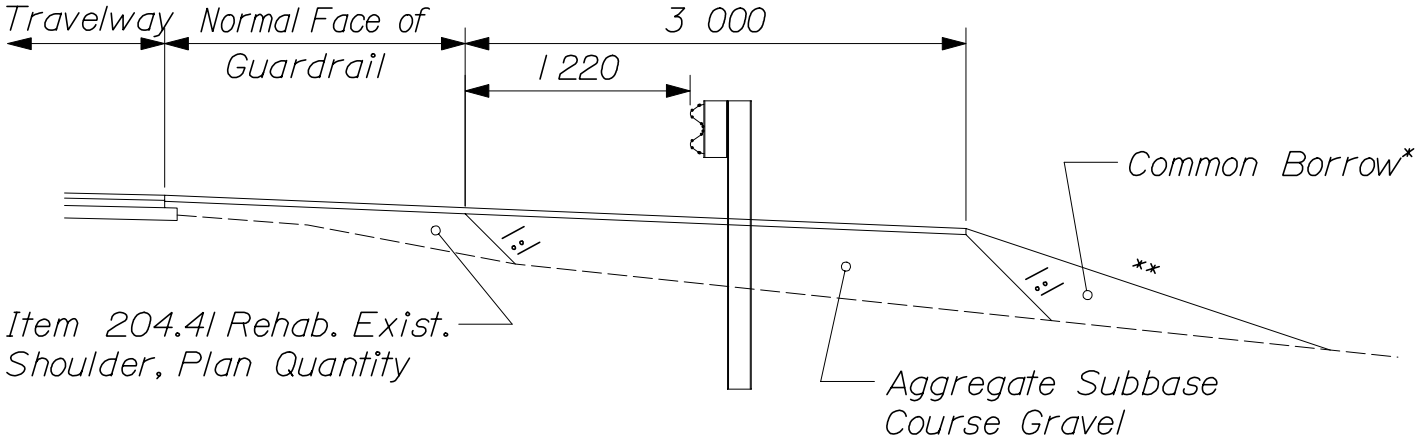

SECTION A-A

* Adjacent or available excavation shall be used instead of Common Borrow unless otherwise directed by the Resident.

** This shall be a 1:4 slope in areas that are presently 1:6. The steepest slope shall be 1:3 in all other areas.

Note:

Widened Shoulder for M.E.L.T., when required, will be paid for under Item 606.752, complete in place, which price shall be full payment for furnishing, placing, grading, and compaction of aggregate subbase. Common Borrow, seed, mulch, loam, and Hot Bituminous Pavement will be paid for under the applicable items.

SHOULDER WIDENING FOR M.E.L.T.

606(16)

LOW VOLUME GUARDRAIL END

606(17)

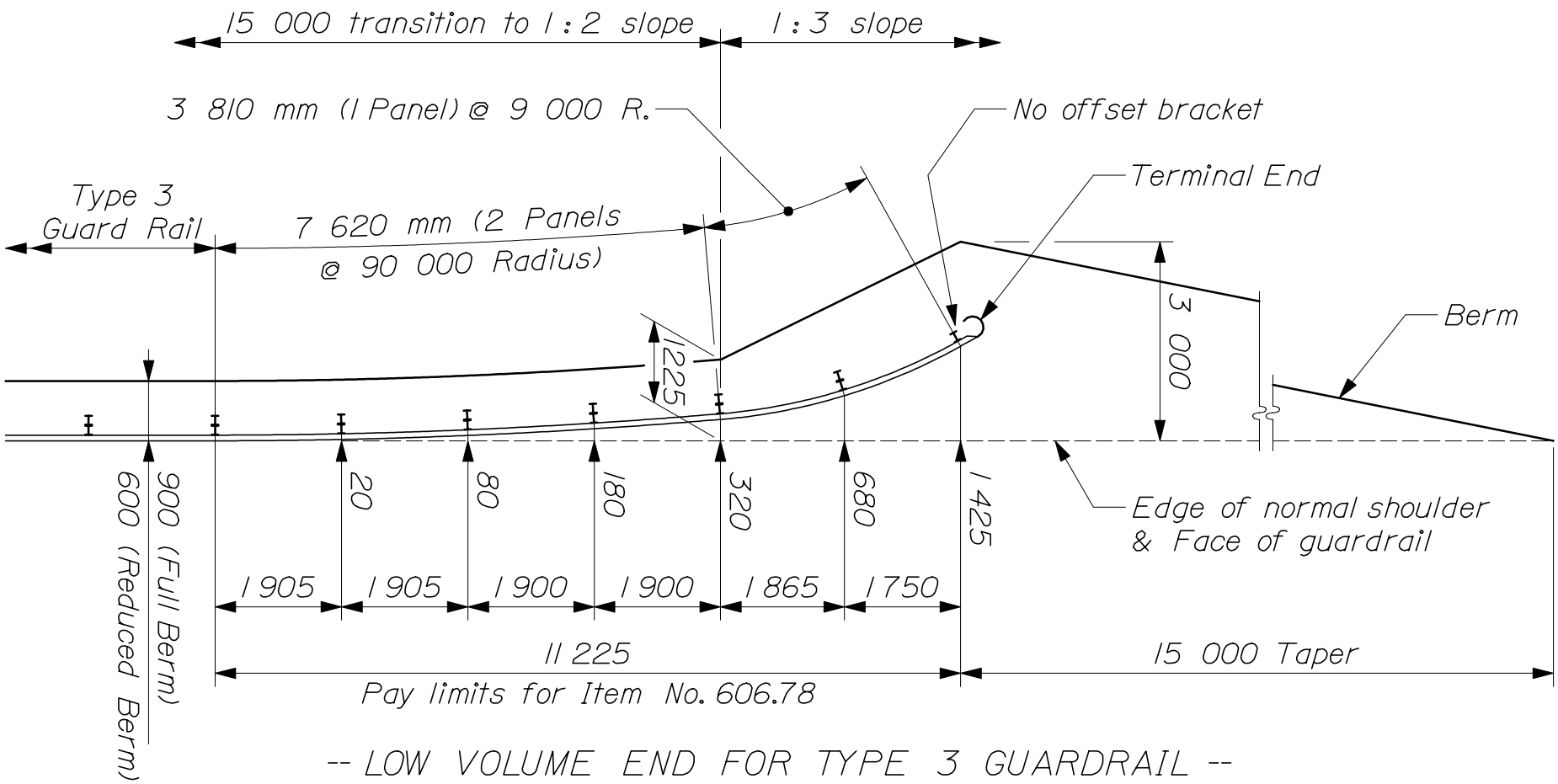

-- LOW VOLUME END FOR TYPE 3 GUARDRAIL --

NOTES:

1. Layout dimensions are measured to the face of the guardrail beam.
2. Provide plate washers FWR03 for the beam - to - post connections at the last seven (7) posts.

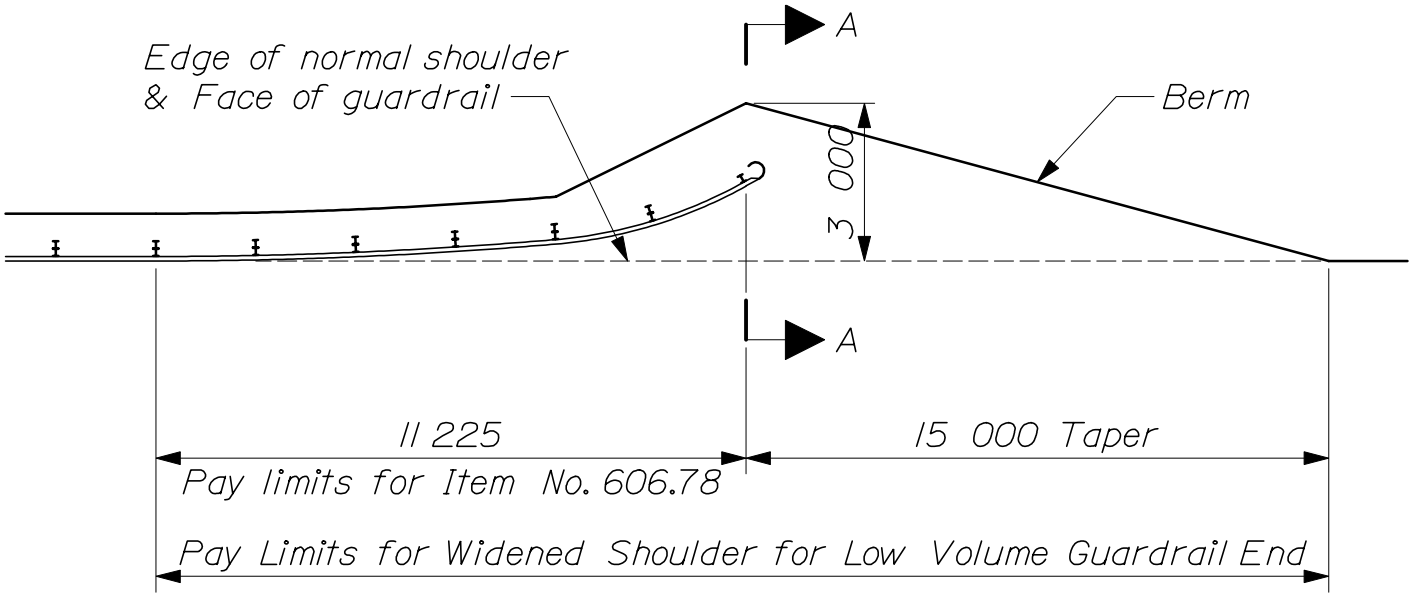

-- PLAN --

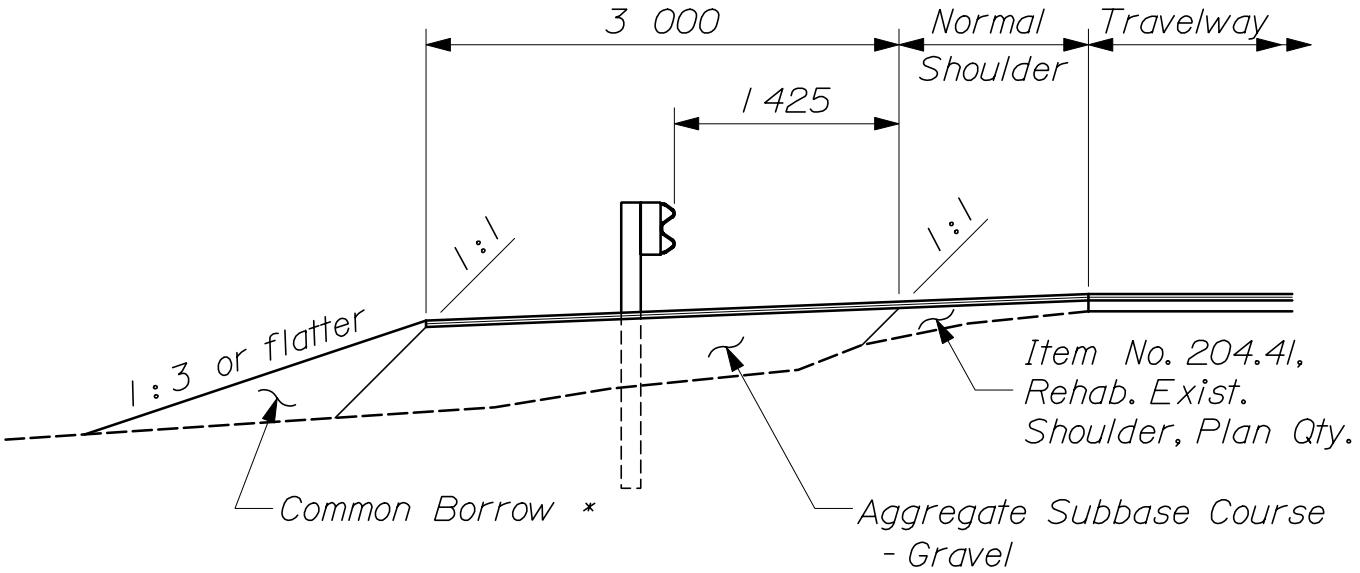

-- SECTION A - A --

* Use adjacent or available excavation in place of Common Borrow unless otherwise directed by the Engineer.

NOTE:

Widened Shoulder for Low Volume Guardrail End, when required, will be paid for under Item No. 606.753, complete in place, which price shall be full payment for furnishing, placing, grading and compacting of aggregate subbase. Common borrow, seed, mulch, loam and hot bituminous pavement will be paid for under the applicable pay items.

SHOULDER WIDENING FOR LOW VOLUME GUARDRAIL END

606(18)

Use manufacturing installation guidelines for flare offset at each post *

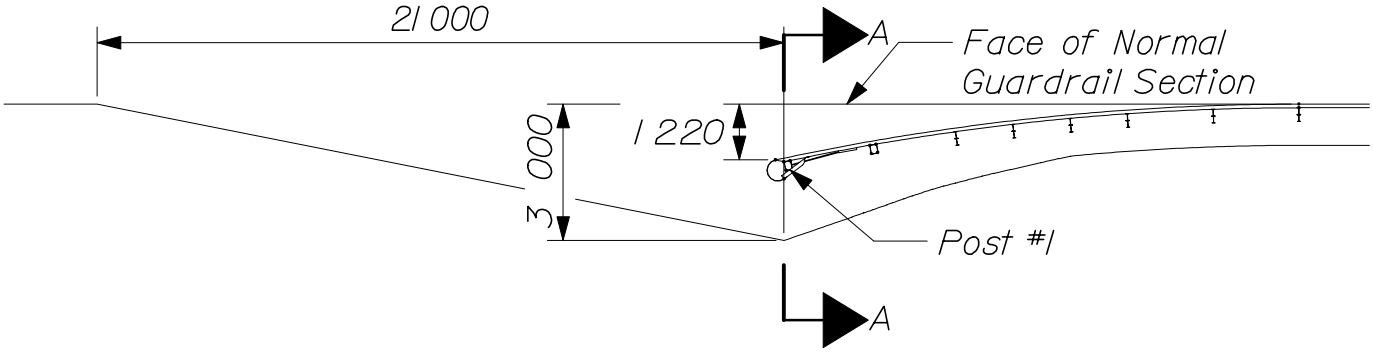

*Only a 1 220 mm offset may be used at Post #1

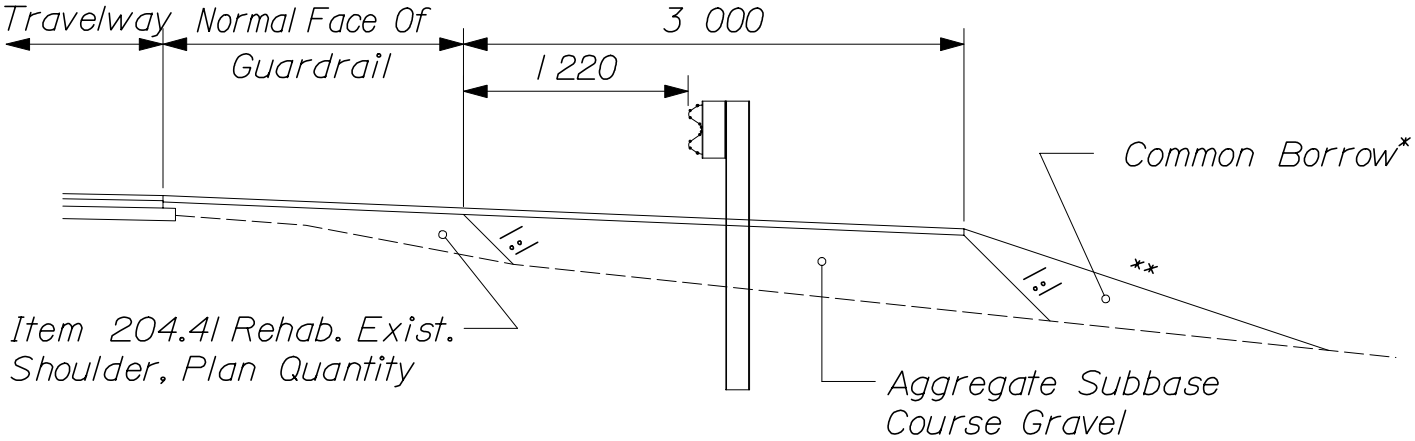

SECTION A-A

* Adjacent or available excavation shall be used instead of Common Borrow unless otherwise directed by the Resident.

** This shall be a 1:4 slope in areas that are presently 1:6. The steepest slope shall be 1:3 in all other areas.

SHOULDER WIDENING FOR GUARDRAIL 350 TERMINAL

606(19)

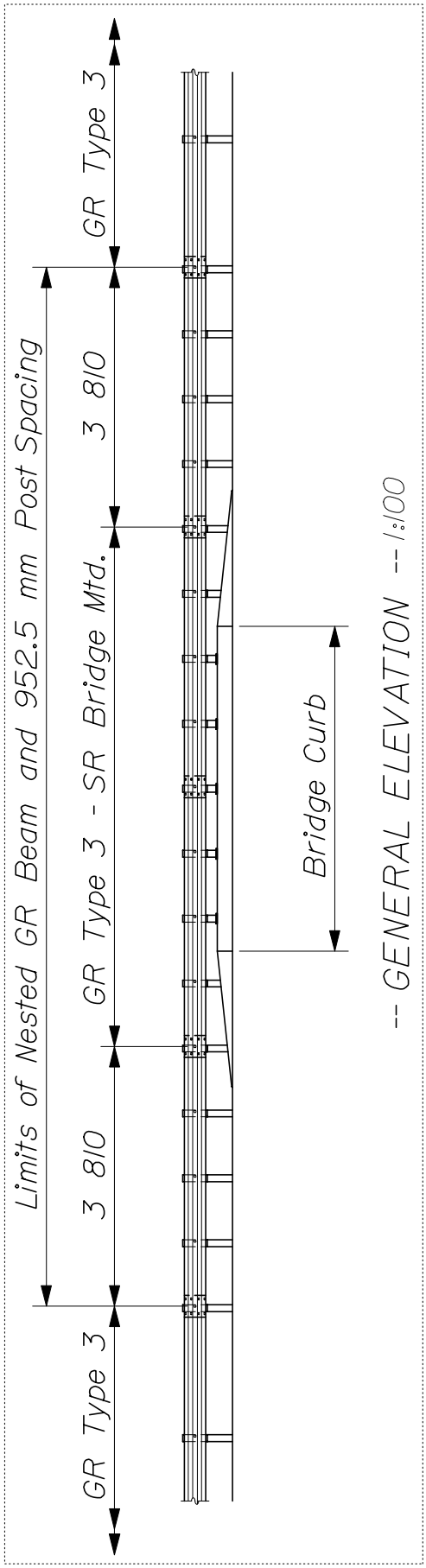

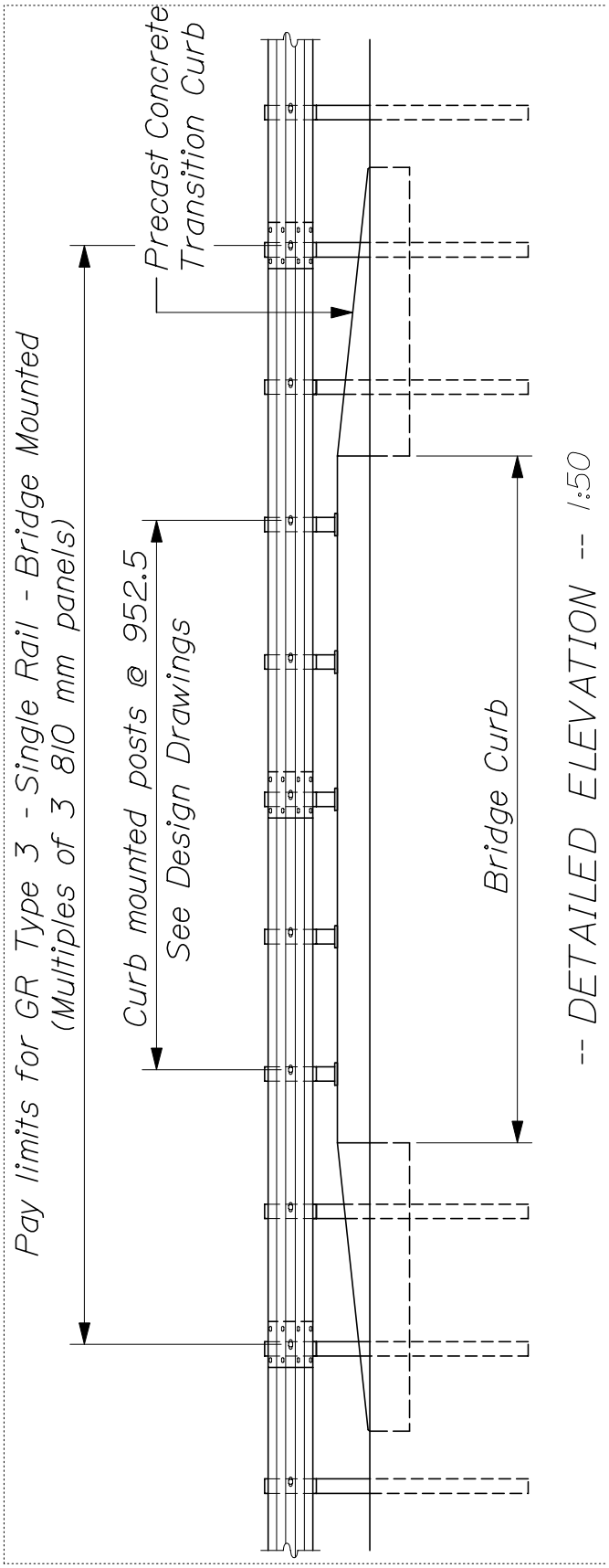

GUARDRAIL TYPE 3 - SINGLE RAIL BRIDGE MOUNTED

606(20)

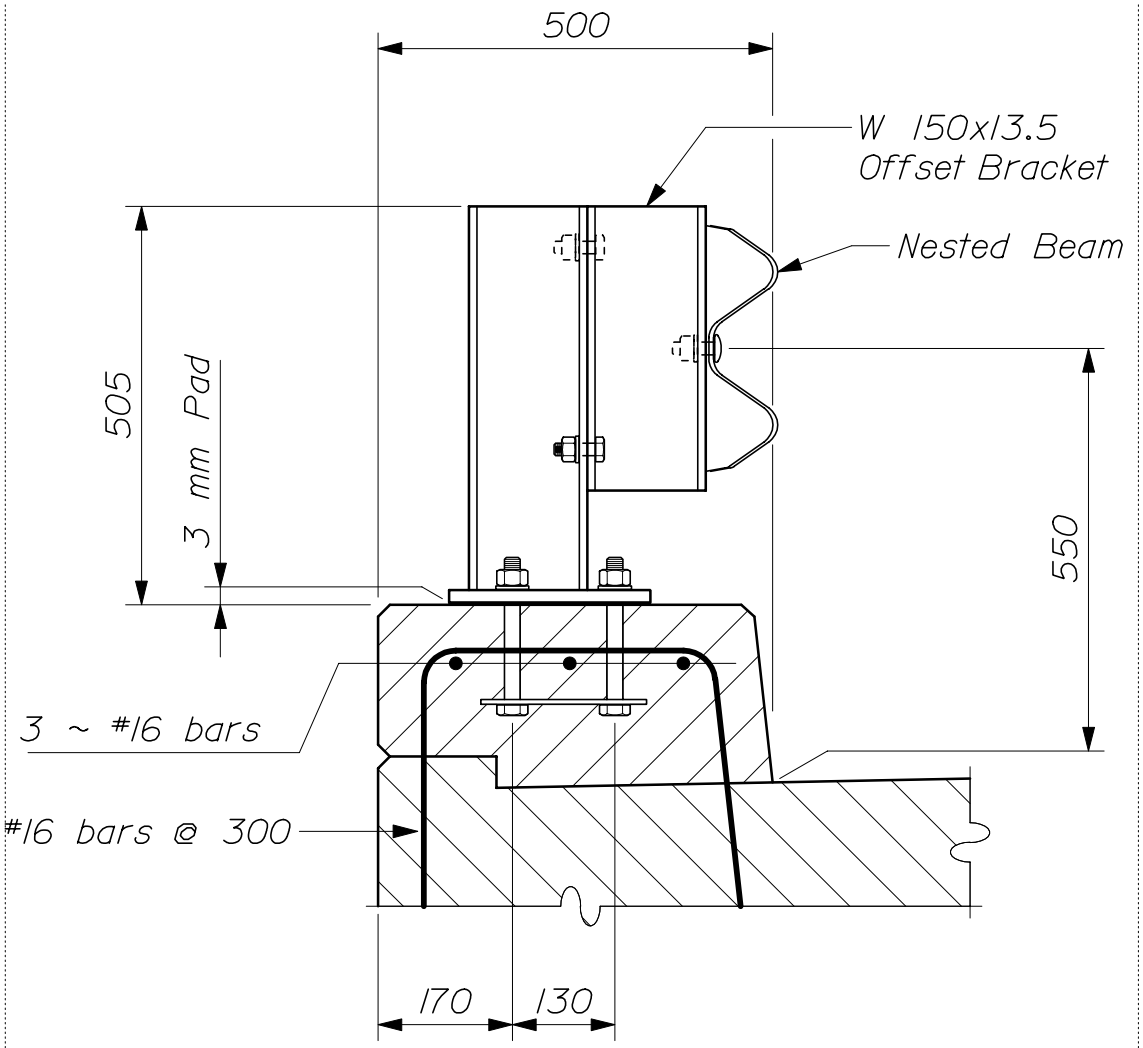

-- TYPICAL RAIL SECTION -- 1:10

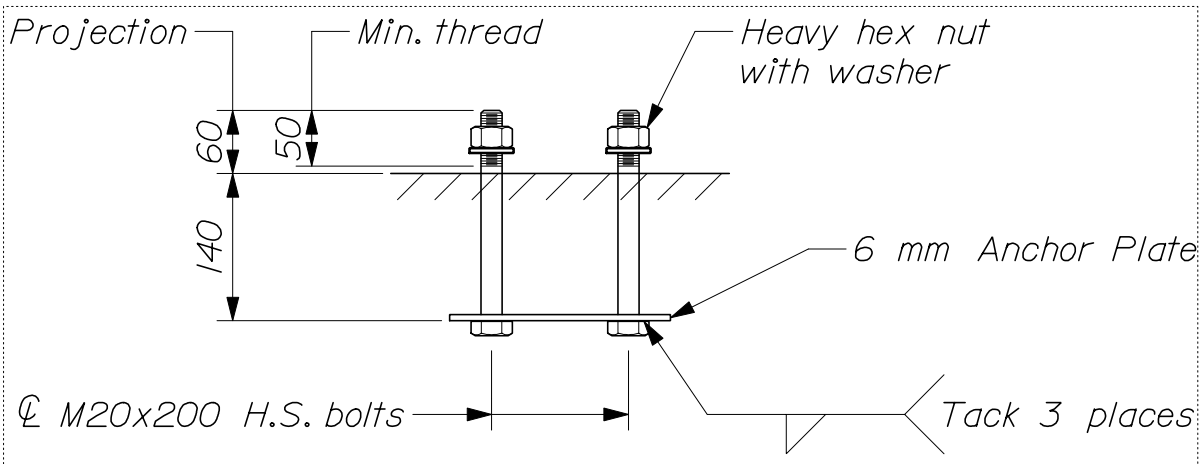

-- ANCHOR BOLT DETAIL -- 1:7.5

GUARDRAIL TYPE 3 - SINGLE RAIL BRIDGE MOUNTED

606(21)

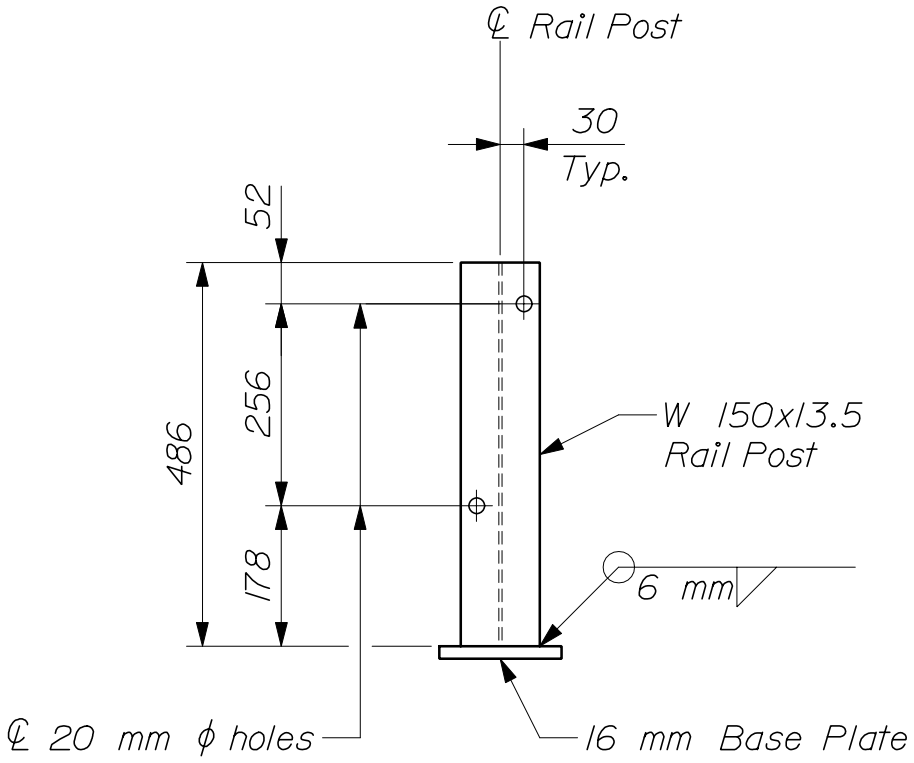

-- RAIL POST ELEVATION --

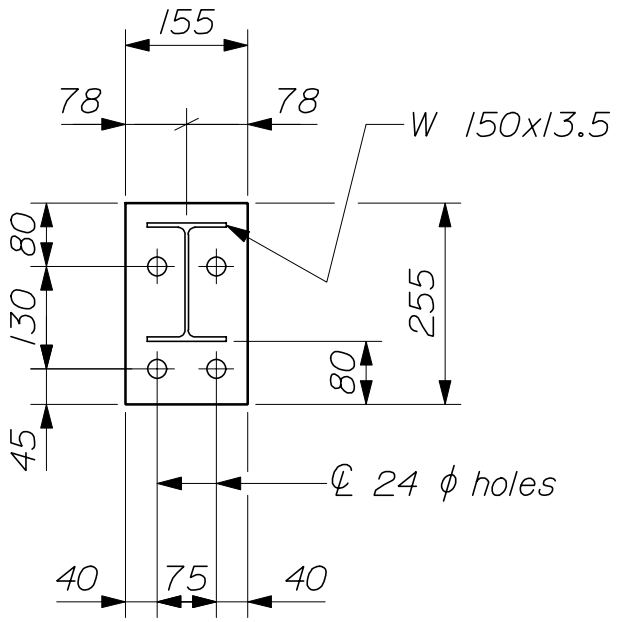

-- BASE PLATE PLAN --

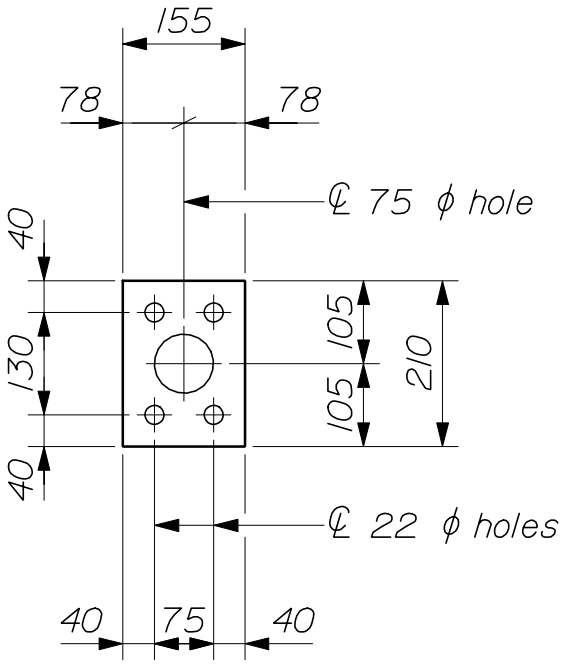

-- ANCHOR PLATE PLAN -- 1:10

GUARDRAIL TYPE 3 - SINGLE RAIL BRIDGE MOUNTED

606(22)

NOTES:

1. All work and materials shall conform to the provisions of Section 507 - Railings and Section 606 - Guardrail of the Standard Specifications, as applicable.

2. All exposed cut or sheared edges shall be broken and free of burrs.

3. Curb mounted posts shall be set normal to grade unless otherwise shown.

4. Twenty - five percent of the post - to - base welds in a production lot shall be tested by the Magnetic Particle Method. If rejectable discontinuities are found, another twenty - five percent of that production lot shall be tested. If rejectable discontinuities are found in the second twenty - five percent, all post - to - base welds in that lot shall be tested. Acceptance criteria shall be in accordance with the latest editon of the AWS D1.5 Bridge Welding Code.

5. All non - stock parts shall be galvanized after fabrication in accordance with ASTM A 123, except that hardware shall meet the requirements of either ASTM A 153 or ASTM B 695, Class 50, Type I. Parts except hardware shall be blast - cleaned prior to galvanizing in accordance with SSPC - SP6.

6. Anchor bolts shall be set with a template. Nuts securing the post base shall be tightened to a snug fit and given an additional 1/8 turn.

7. Nested guardrail beam and extra posts beyond the pay limits of the Bridge - Mounted Guardrail will be paid for as twice the required length of Guardrail Type 3 - Single Rail.

8. For details of the Concrete Transition Curb, refer to Standard Details Section 526, Concrete Transition Barrier. Payment for Concrete Transition Curb will be made under Item No. 609.247, Terminal Curb Type 2 - 2.1 m.

MATERIALS:

Guardrail Beam, Offset Brackets and Posts.... See Standard Spec.'s Section 710
Base Plate & Anchor Plate..... AASHTO M 183M/M 183 (ASTM A 36/A 36M)
Anchor bolts, washers & nuts..... ASTM F 568, Class 8.8

GUARDRAIL TYPE 3 - SINGLE RAIL
BRIDGE MOUNTED

606(23)

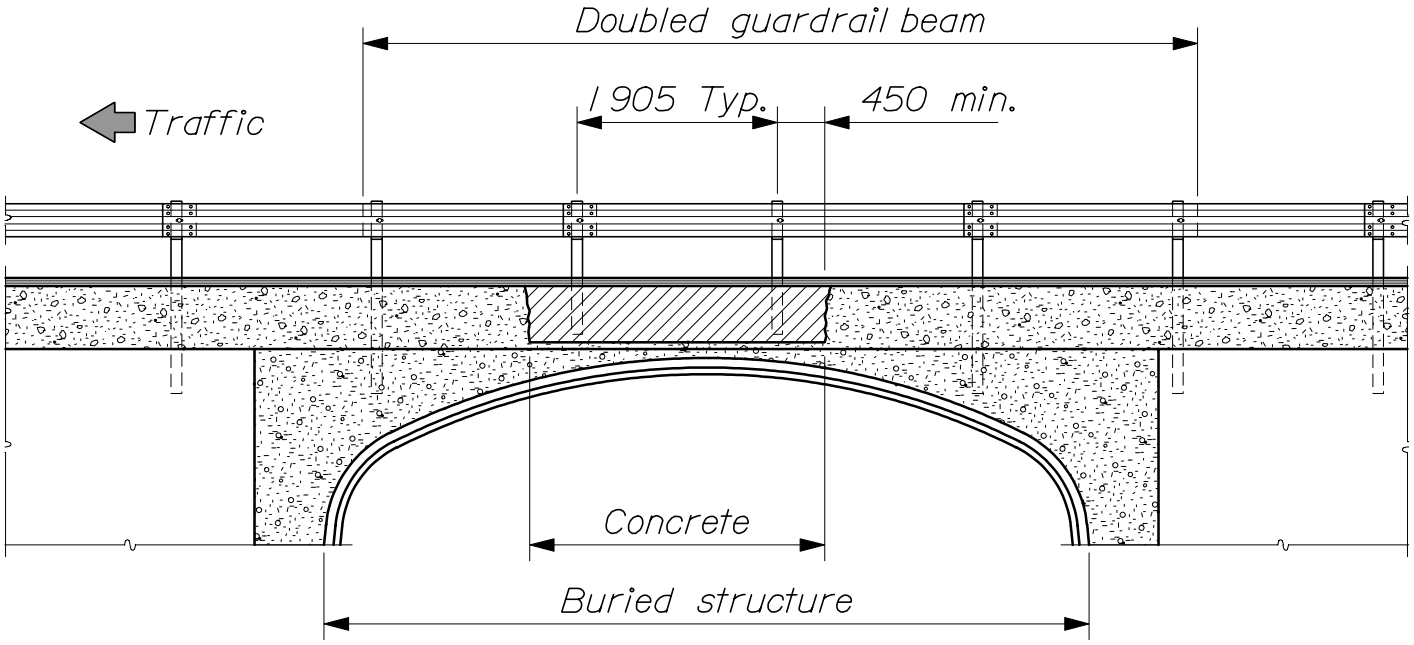

-- ELEVATION --

NOTES:

1. Guardrail posts interfering with a buried structure shall be cut to length in the field and cast into a concrete base as shown. The concrete may be placed directly into a trench excavated in the subbase material. The concrete mix shall be Class "A". Payment will be considered incidental to the guardrail pay items.

2. Only galvanized steel posts are to be used for this application.

3. The guardrail beam shall be doubled at least one space beyond the limits of the cut posts. Any extra beam length shall be installed toward the leading end of the guardrail. Payment will be considered incidental to the guardrail pay items.

4. Payment for any hand work required to place pavement in this area will be considered incidental to the paving items.

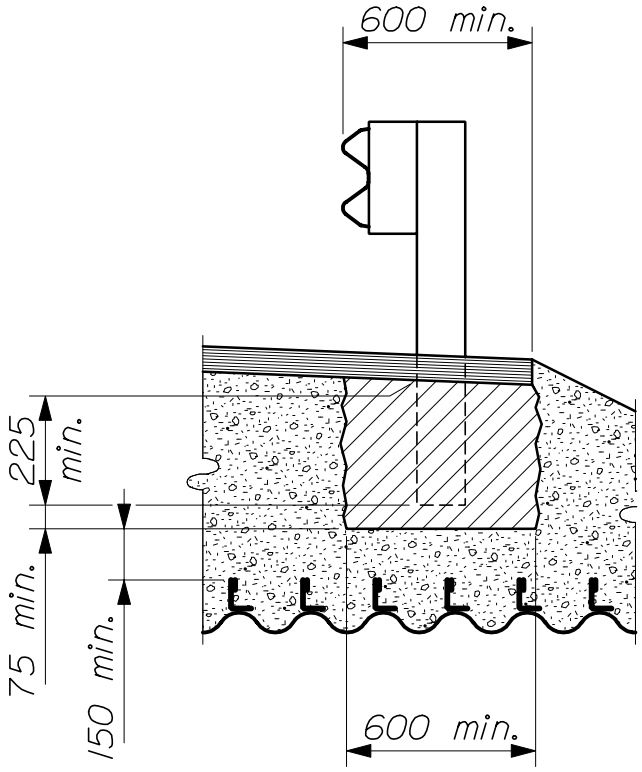

-- GUARDRAIL SECTION --

GUARDRAIL TREATMENT OVER BURIED STRUCTURES

606(24)

BRIDGE TRANSITION TYPE "I"

606(25)

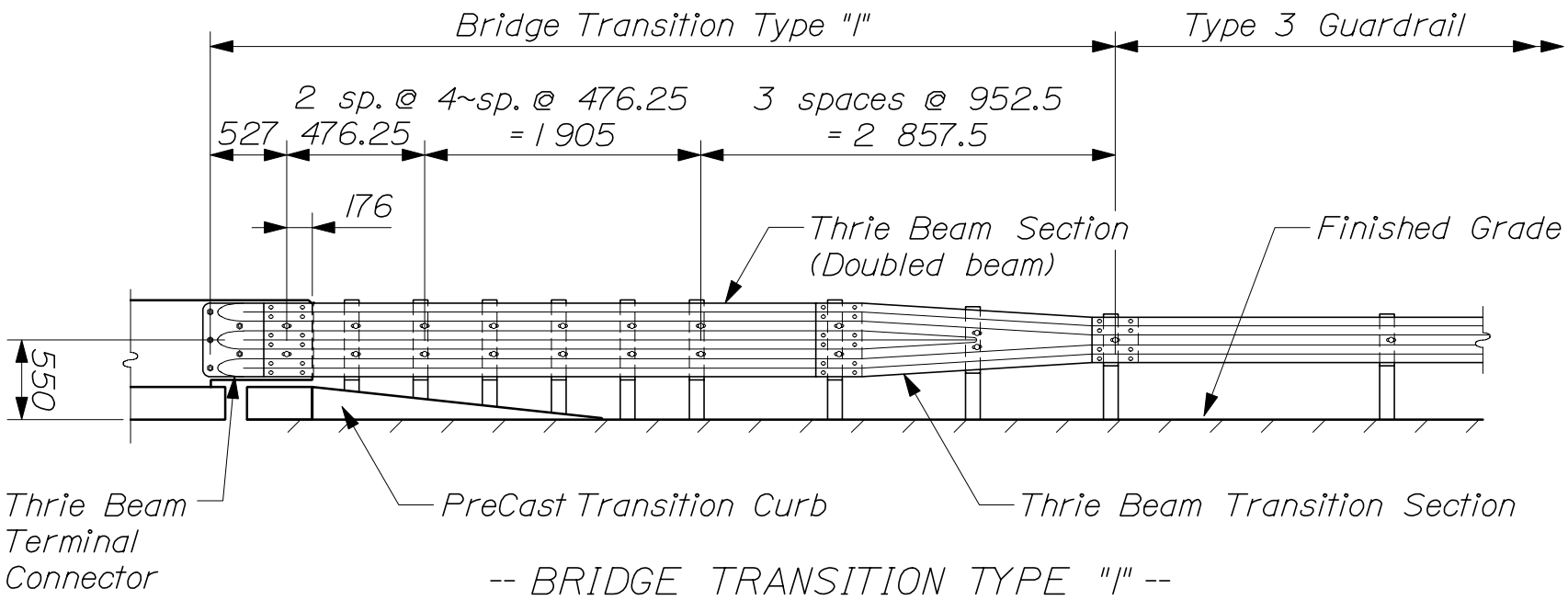

-- BRIDGE TRANSITION TYPE "I" --

PARTS LIST:

Thrie Beam Section (2)	RTM04a (Modified)
Thrie Beam Transition Section (1)	RWT01a
Thrie Beam Terminal Connector (1)	RTE01b
Thrie Beam Steel Post & Offset Block (8)	PWE03, PWB02
or	
Thrie Beam Timber Post & Offset Block (8)	PDE03, PDB02

Note: Part designations refer to details shown in "A Guide to Standardized Highway Barrier Hardware" as prepared and approved by the AASHTO - AGC - ARTBA Joint Committee, Task Force 13 Report.

BRIDGE TRANSITION TYPE "2"

606(26)

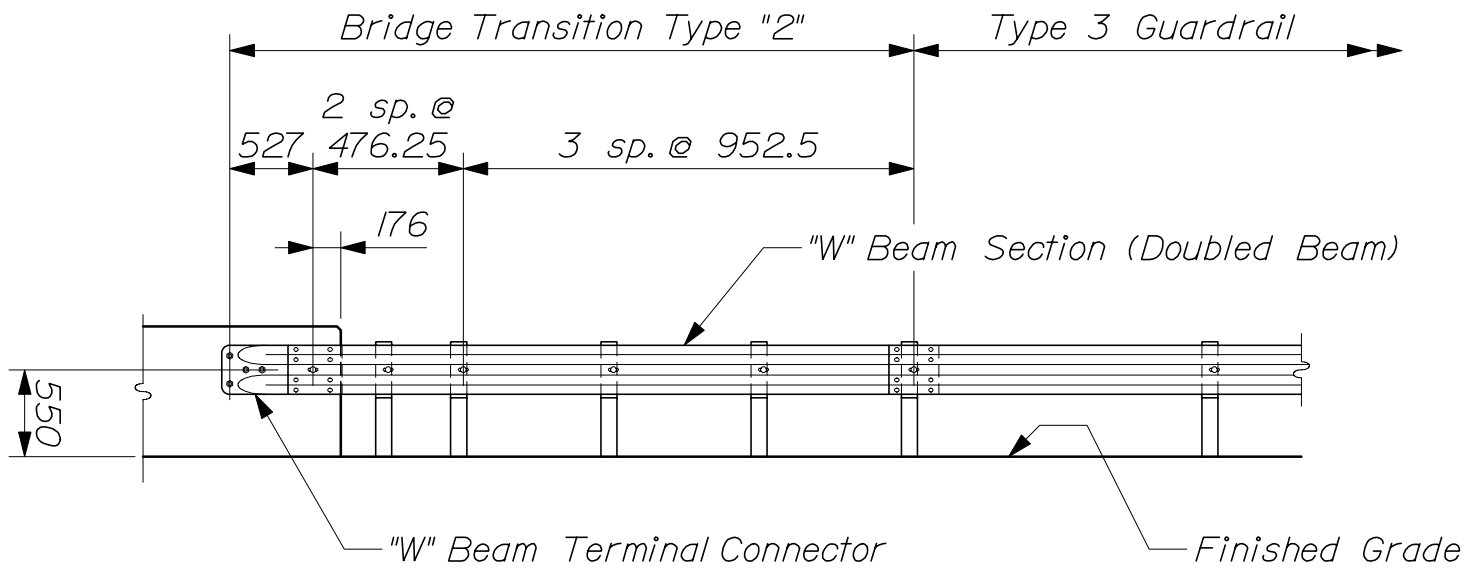

-- BRIDGE TRANSITION TYPE "2" --

PARTS LIST:

"W" Beam Section (2)	RWM04a
"W" Beam Terminal Connector (1)	RWE02a
"W" Beam Steel Post & Offset Block (4)	PWE01, PWB01
or	
"W" Beam Timber Post & Offset Block (4)	PDE02, PDB01

Note: Part designations refer to details shown in "A Guide to Standardized Highway Barrier Hardware" as prepared and approved by the AASHTO - AGC - ARTBA Joint Committee, Task Force 13 Report.

TERMINAL CONNECTOR NOTES

1. Nuts, washers, 22 mm ϕ bolts, and Bearing Plate shall be incidental to Item 606.25. Nuts shall conform to A.S.T.M. A563, Grade DH, galvanized in accordanced with A.S.T.M. A153. Bolts shall be heavy hex structural bolt A.S.T.M. A325, Type 1 or 3, and galvanized in accordance with A.S.T.M. 153 - Nuts shall also be heavy hex.

2. Terminal Connector anchorage shall be installed on the trailing end.

3. After installation of Guardrail is complete, upset threads on anchor bolts in three places around each bolt at the junction of the nut and the exposed thread with a center punch or similar tool.

4. Terminal Connector anchorage shall be paid under Item 606.25.

5. All accessories (posts, bolts. nuts, etc.) shall be as detailed for standard Type 3 Guardrail, except as otherwise detailed.

6. Field drilling for Terminal Connector, blockouts, and all hardware shall be considered incidental to Item 606.25, Terminal Connector.

CROSS SECTION
OF END POST

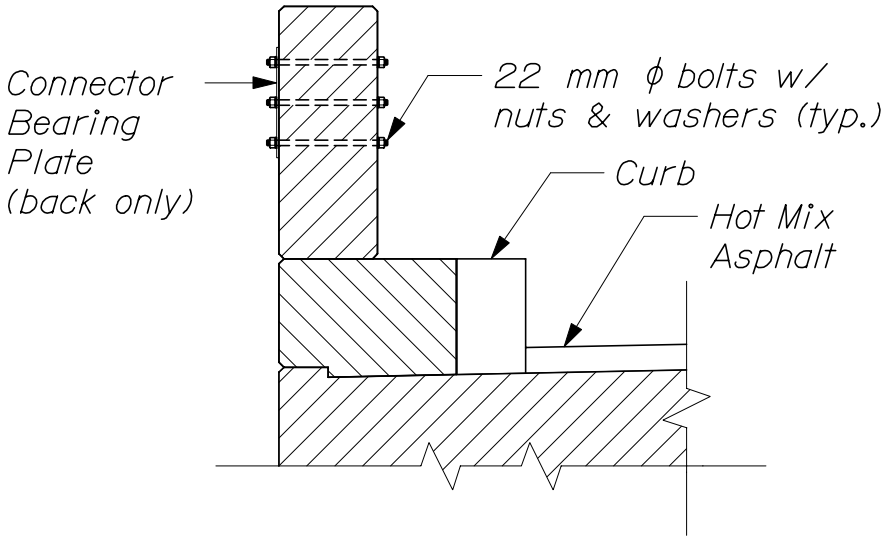

TERMINAL CONNECTOR
BEARING PLATE

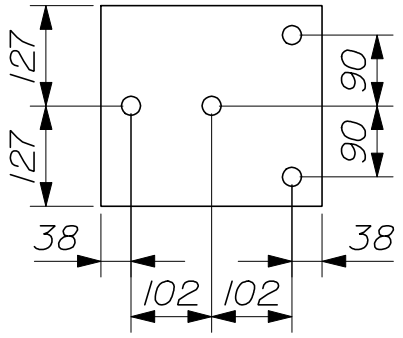

HOLES 24 mm ϕ (TYP.)

TERMINAL CONNECTOR PLATE & NOTES

606(27)

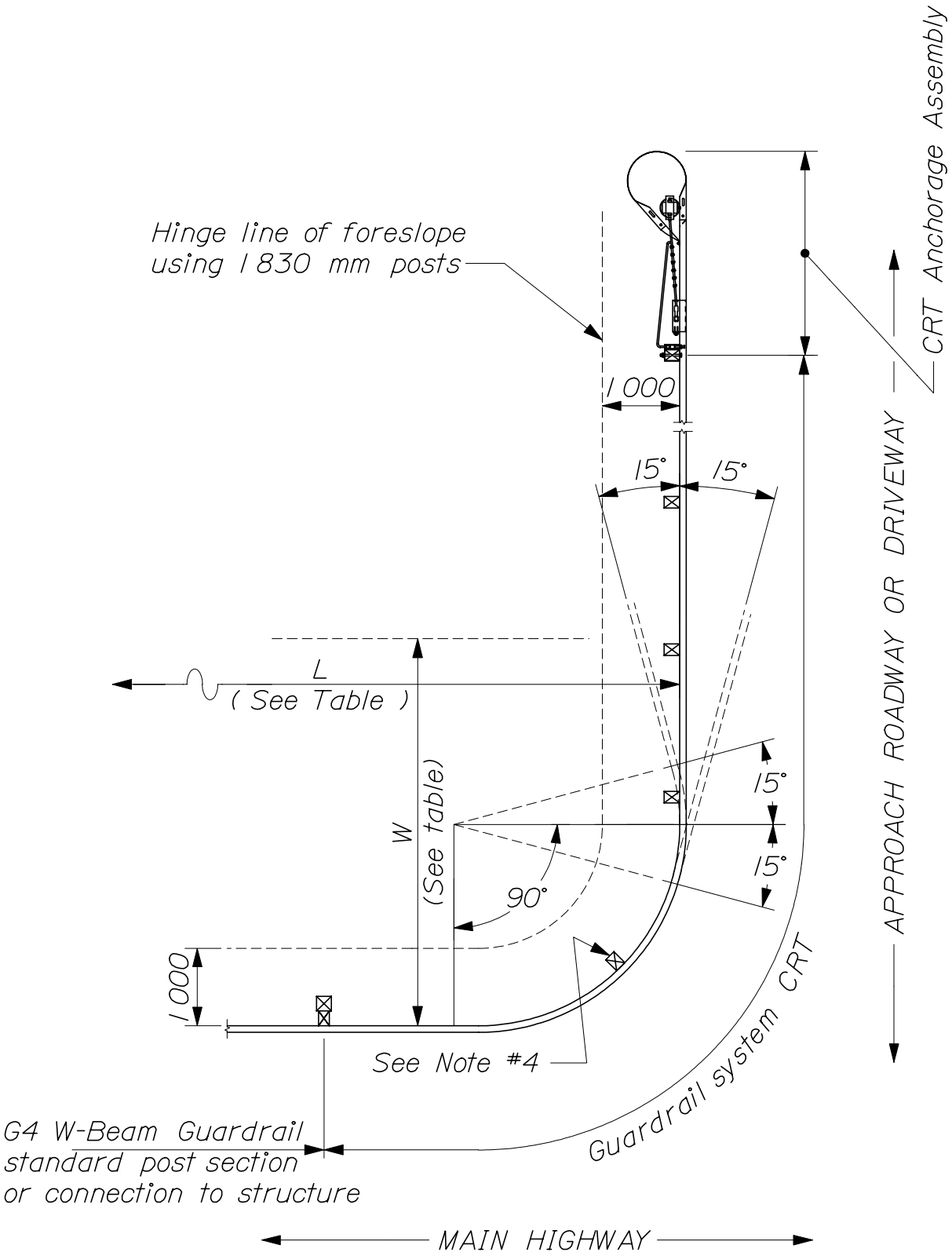

~ PLAN ~

CABLE RELEASING TERMINAL
CURVED W BEAM GUARDRAIL SYSTEM

606(28)

RADIUS METERS	ANGLE	NUMBER OF CRT POSTS	AREA FREE OF FIXED OBJECTS METERS	
			L	W
2.6	75°-105°	5	8.0	5.0
5.0	75°-90°	6	9.0	5.0
	90°-105°	7		
8.0	75°	7	12.0	6.0
	90°	8		
	105°	9		
10.0	75°	9	15.0	6.0
	90°	11		
	105°	12		

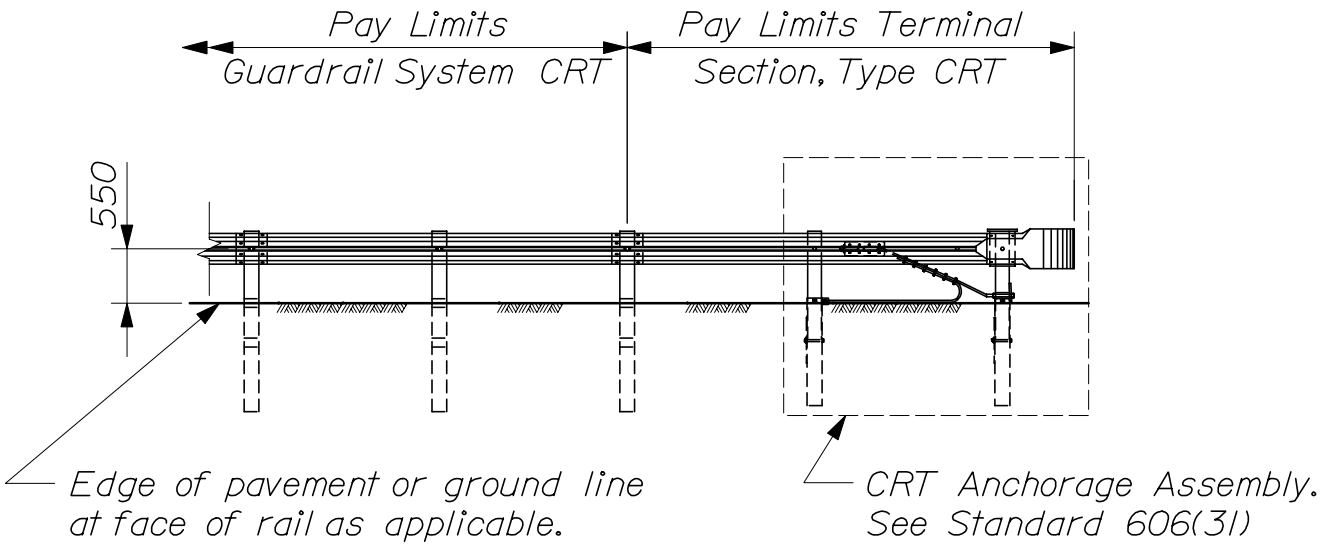

~ ELEVATION ~

CABLE RELEASING TERMINAL
CURVED W BEAM GUARDRAIL SYSTEM

606(29)

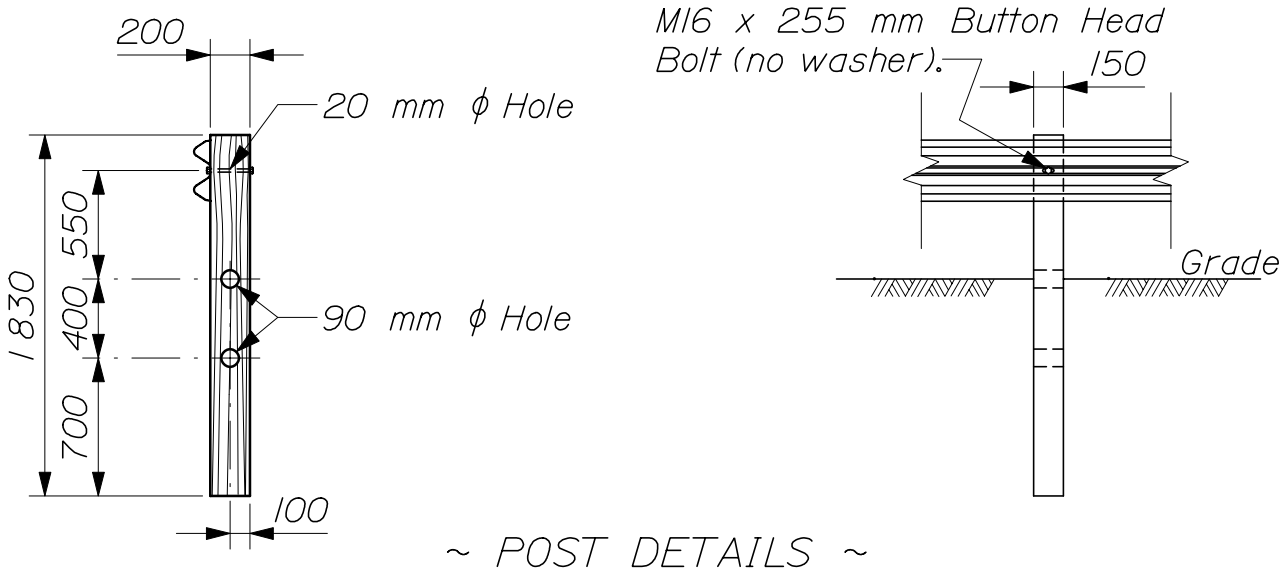

~ POST DETAILS ~

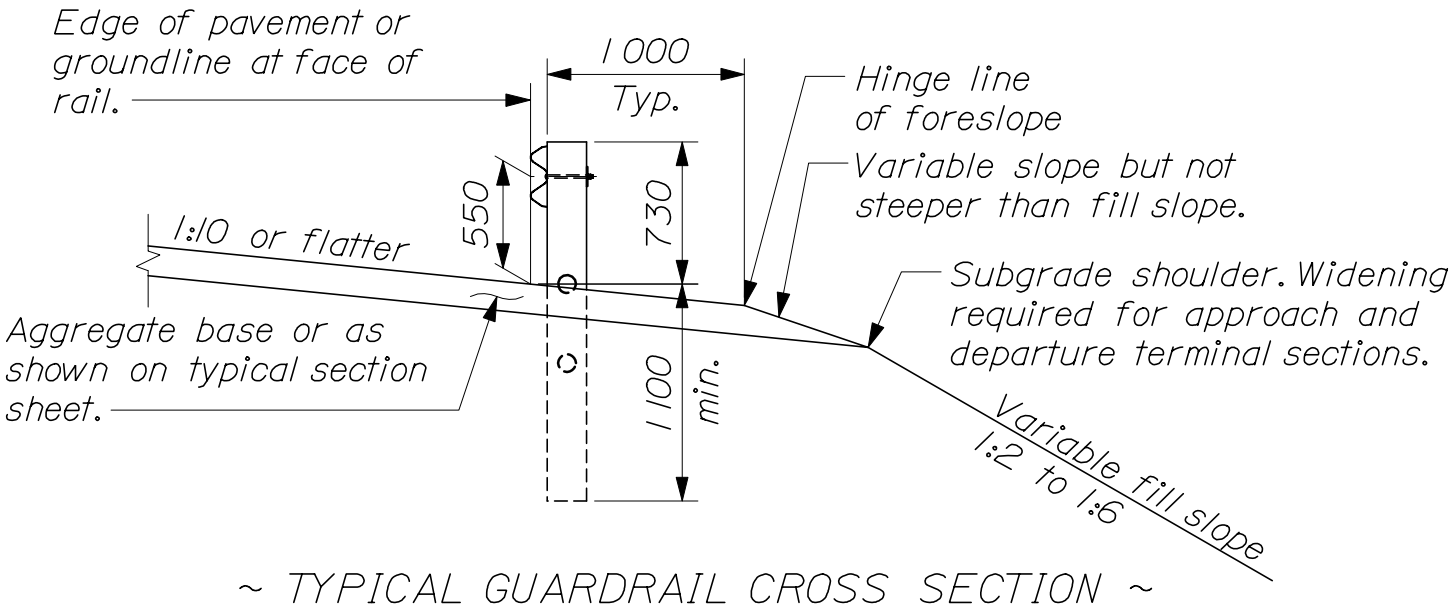

~ TYPICAL GUARDRAIL CROSS SECTION ~

NOTES:

1. Dimensional tolerances not shown or implied are intended to be those consistent with the proper functioning of the part, including its appearance, and accepted manufacturing practices.

2. The use of terminal section, Type CRT, is limited to driveways, road approaches and low speed minor road connections. Do not use on mainline roadways.

3. Do not bolt post to W beam for 2.6 m radius only.

4. Furnish hardware in the metric sizes shown. Equivalent imperial sizes may be used when metric sizes are not available.

CABLE RELEASING TERMINAL
CURVED W BEAM GUARDRAIL SYSTEM

606(30)

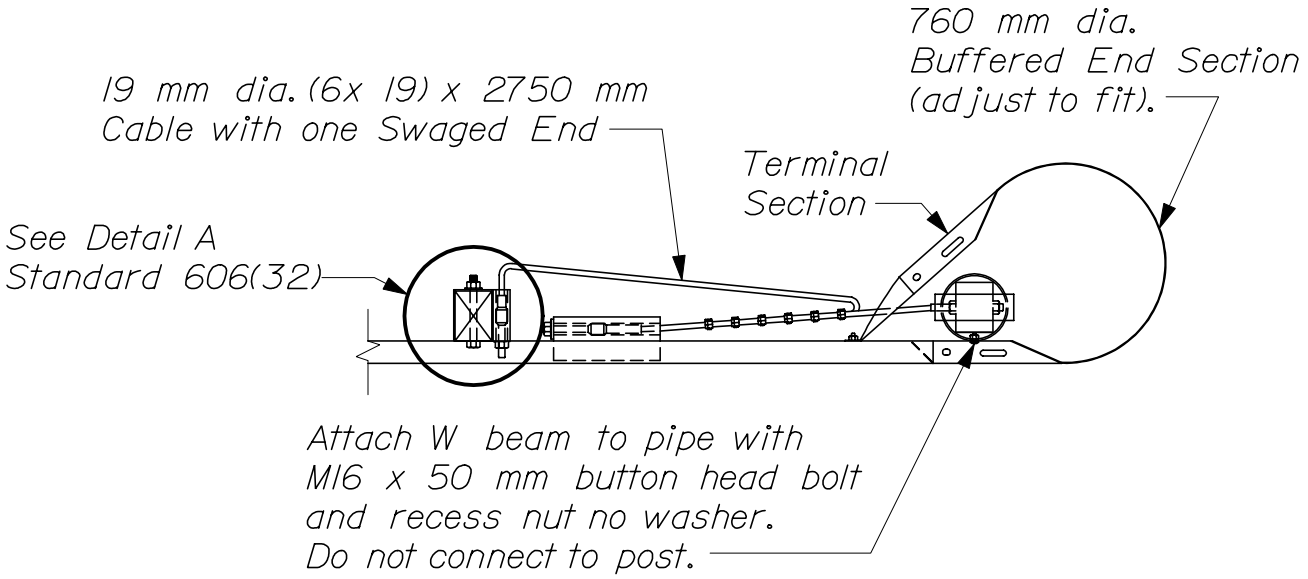

PLAN

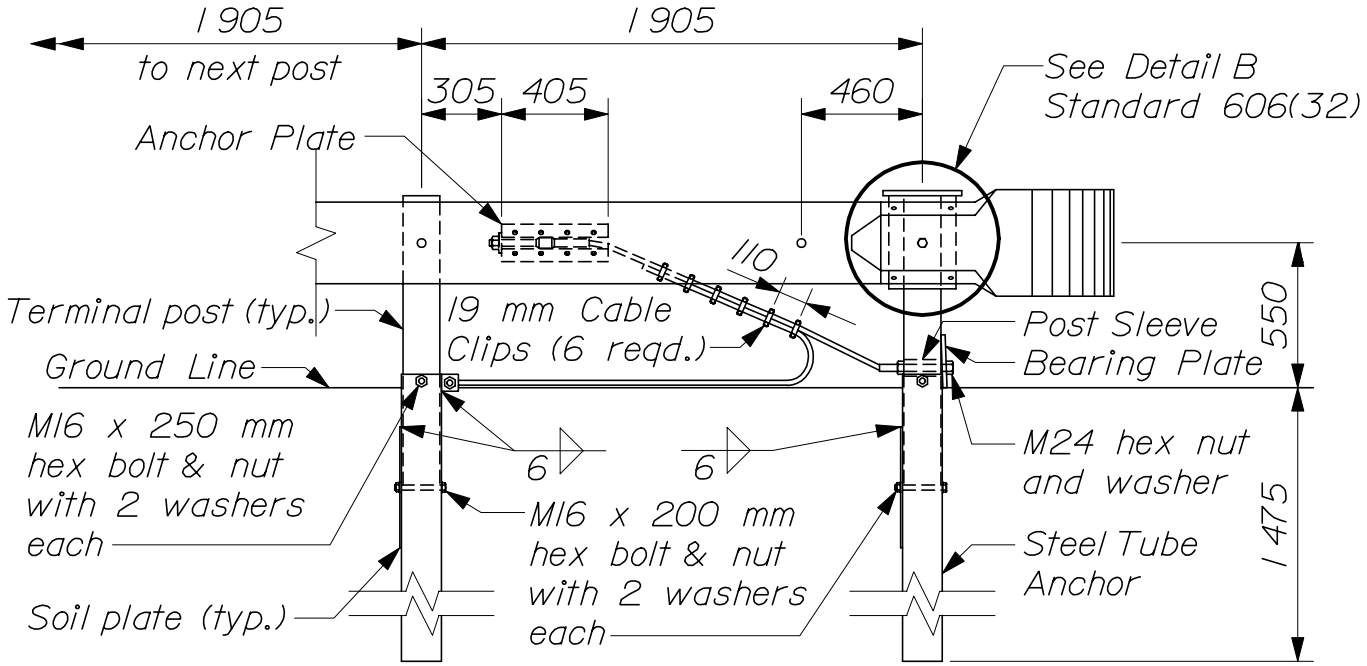

ELEVATION

CABLE RELEASING TERMINAL ANCHORAGE ASSEMBLY

606(31)

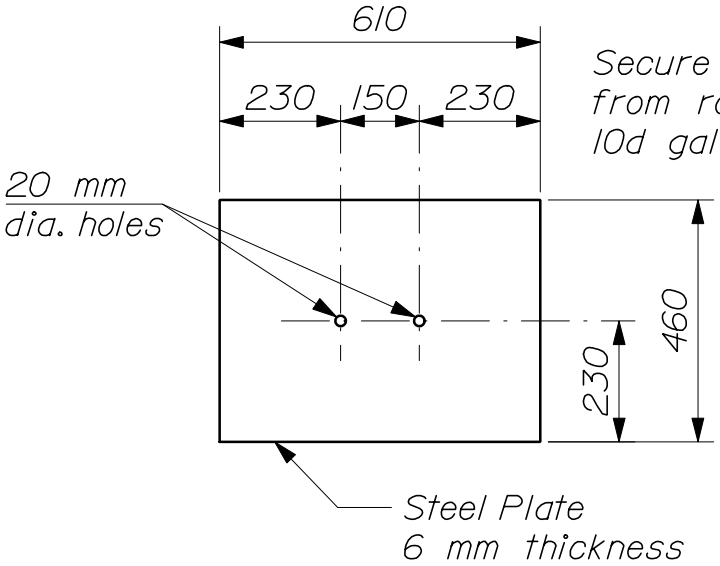

~ SOIL PLATE ~
(2 reqd.)

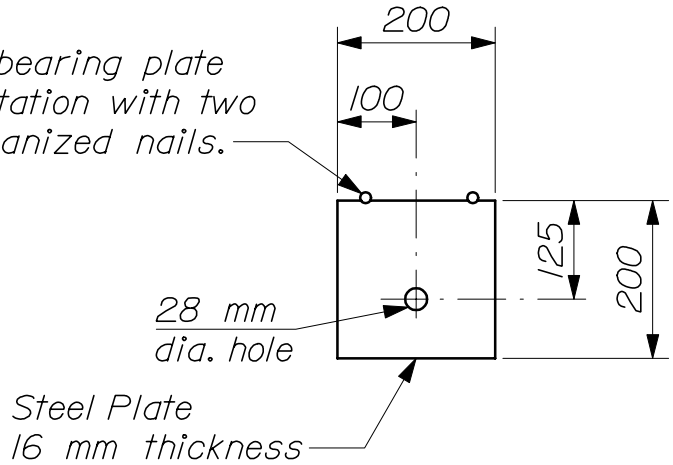

~ BEARING PLATE ~

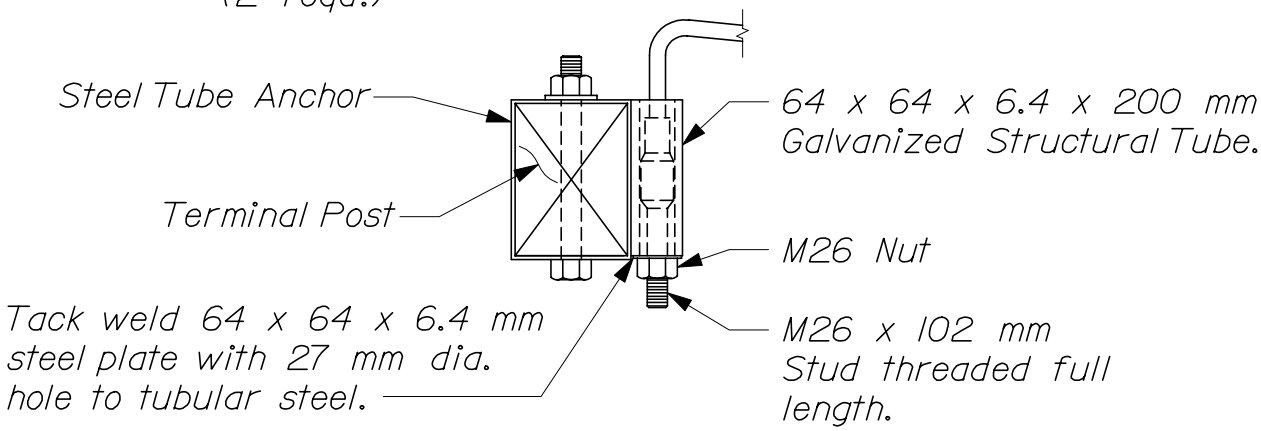

~ DETAIL A ~

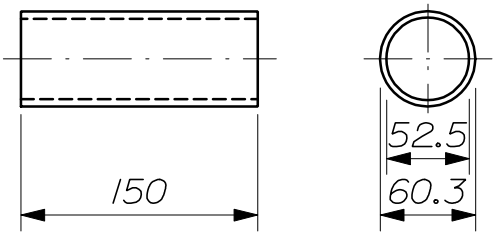

~ GALVANIZED STANDARD ~
PIPE POST SLEEVE

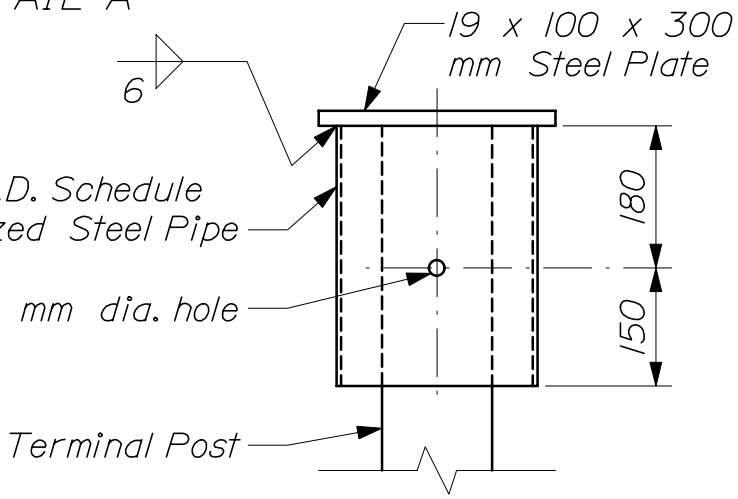

~ DETAIL B ~

CABLE RELEASING TERMINAL HARDWARE

606(32)

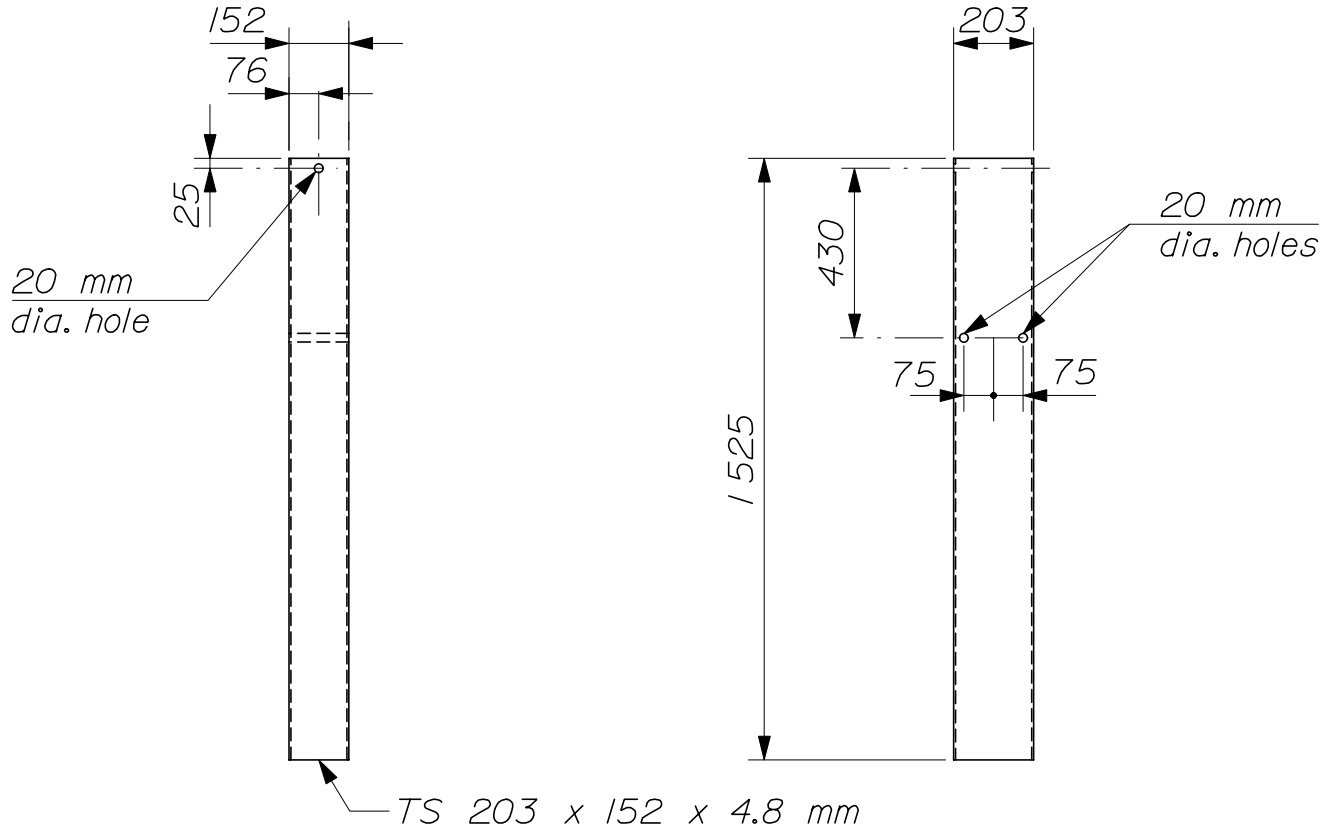

~ STEEL TUBE ANCHOR ~

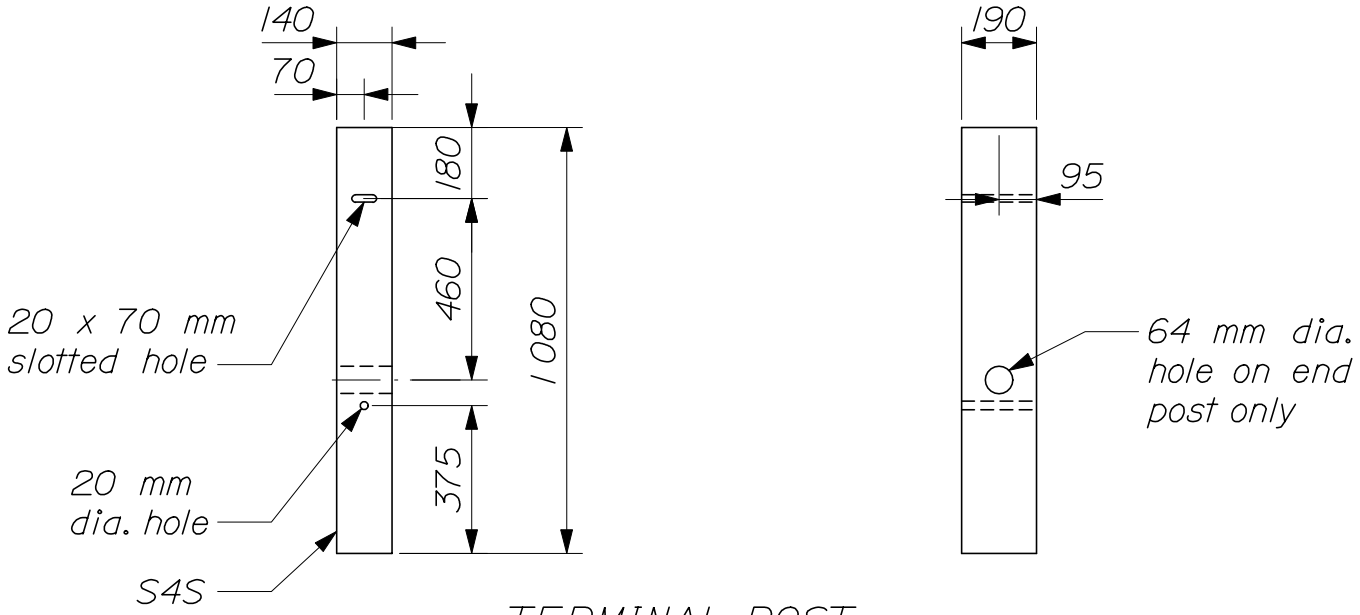

~ TERMINAL POST ~

NOTE:

1. Dimensional tolerances not shown or implied are intended to be those consistent with the proper functioning of the part, including its appearance, and accepted manufacturing practices.

2. Furnish hardware in the metric sizes shown. Equivalent imperial sizes may be used when metric sizes are not available.

CABLE RELEASING TERMINAL HARDWARE

606(33)

WOVEN WIRE FENCE	NOMINAL SIZE (millimeters)	SHAPE	WEIGHT (kg/m)	COMMENTS
End, Intermediate, & Corner Posts	64x64x6.4	⊿	6.101	
	51	ϕ	5.432	Grade 1* w/Top Cap
	51	ϕ	4.639	Grade 2* w/Top Cap
Gate Posts	89x89x7.9	⊿	10.7	
	64	ϕ	8.616	Grade 1* w/Top Cap
	64	ϕ	8.616	Grade 2* w/Top Cap
Line Posts	----	T	1.979	Studded
	32	ϕ	3.378	Grade 1* w/Top Cap
	32	ϕ	2.732	Grade 2* w/Top Cap
Braces	44x44x6.4		4.122	
	32	ϕ	3.378	
	32	ϕ	2.732	
CHAIN LINK FENCE	**NOMINAL SIZE (millimeters)**	**SHAPE**	**WEIGHT (kg/m)**	**COMMENTS**
End & Corner Posts	51 I.D.	ϕ	5.432	Grade 1*
	51 I.D.	ϕ	4.639	Grade 2*
	64x51	H	6.101	
	90x90	⊿	7.649	Integral Loops
Line Posts	38 I.D.	ϕ	4.048	Grade 1*
	38 I.D.	ϕ	3.394	Grade 2*
	48x41	H	4.018	
	48x41	C	3.393	
Top & Brace Rails	32 I.D.	ϕ	3.378	Grade 1*
	32 I.D.	ϕ	2.738	Grade 2*
	41x32	⊔		

* AASHTO M 181 Par. 29.1

FENCE POST, RAIL, AND BRACE OPTIONS

607(01)

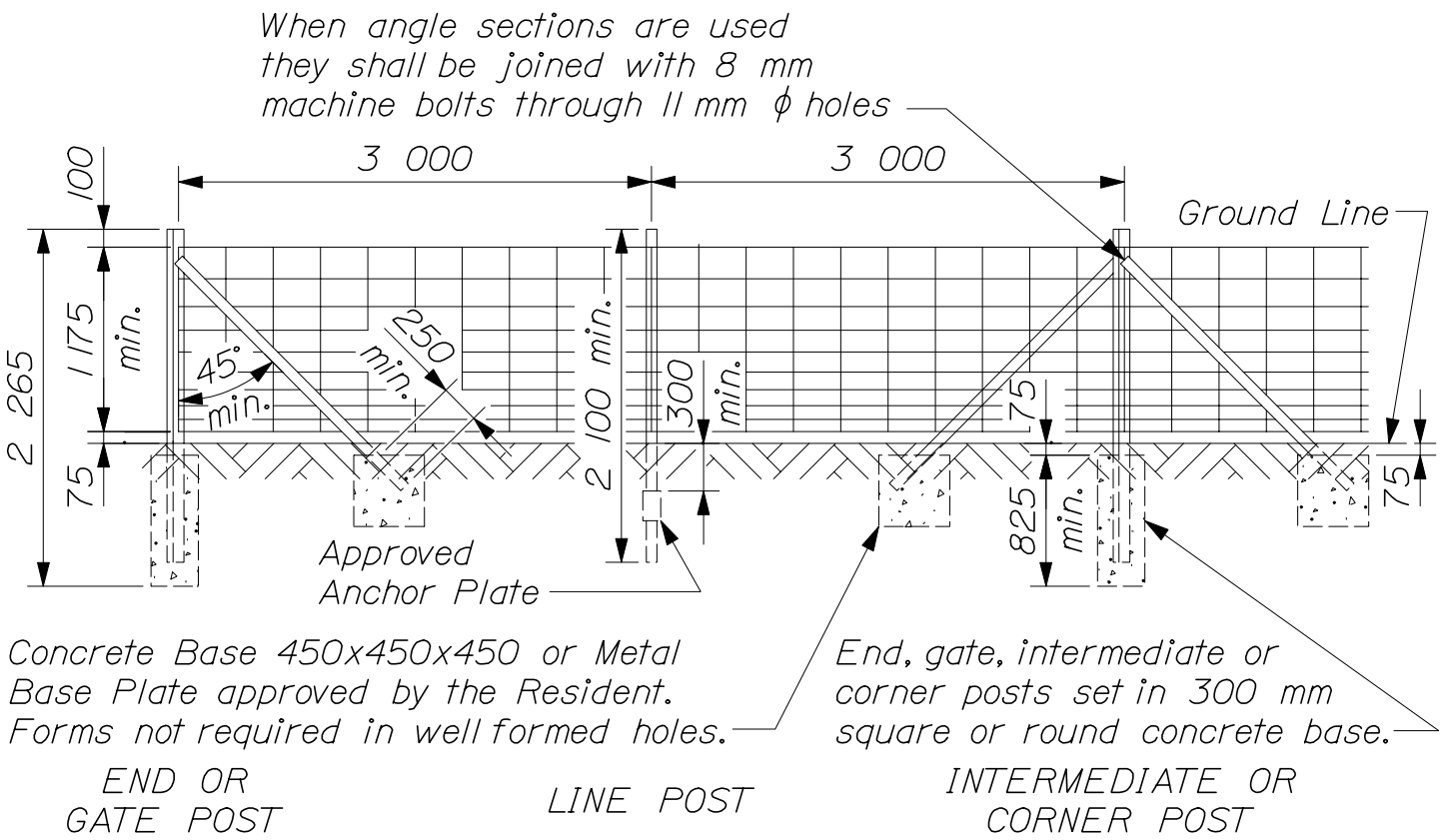

~ WOVEN WIRE FENCING - METAL POSTS ~

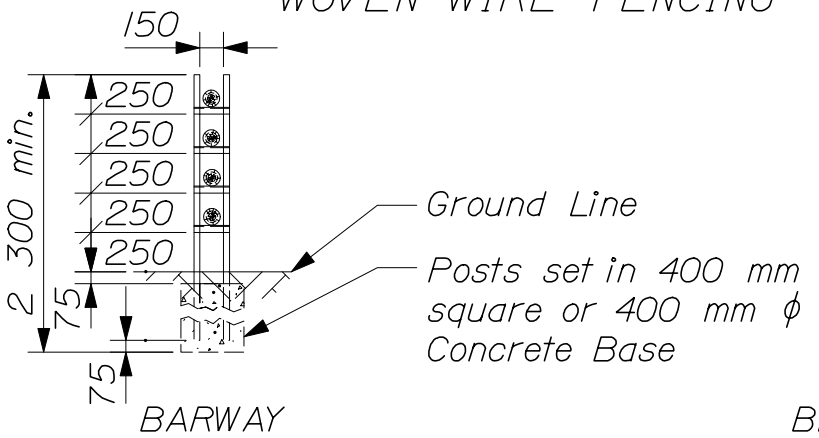

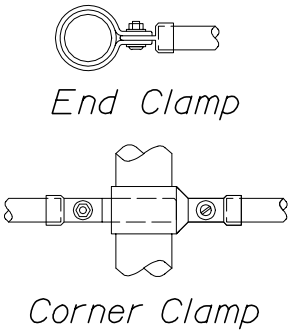

BRACE CLAMPS - PIPE POSTS

NOTE:
Metal posts shall be installed for a 5.0 m opening. Barway posts and braces shall conform to the requirements of "Gate Posts" and "Braces" under "Woven Wire Fencing - Metal Posts". Cross bar supports for barways shall be 44 mm x 44 mm x 6.4 mm rolled angle section. When round gate posts are used, the length of the cross bar supports shall equal the center-to-center of the posts plus 50 mm and they shall be attached to the barway post with 8 mm x 110 mm machine bolts. When angle section gate posts are used, the length of the cross bar supports shall be equal to the out-to-out dimensions of the angle sections and shall be attached with 8 mm x 25 mm machine bolts. All bracing shall conform to the requirements of "Woven Wire Fencing - Metal Posts". Cross bars shall be as required for "Barways - Wood Posts".

~ BARWAYS - METAL POSTS ~

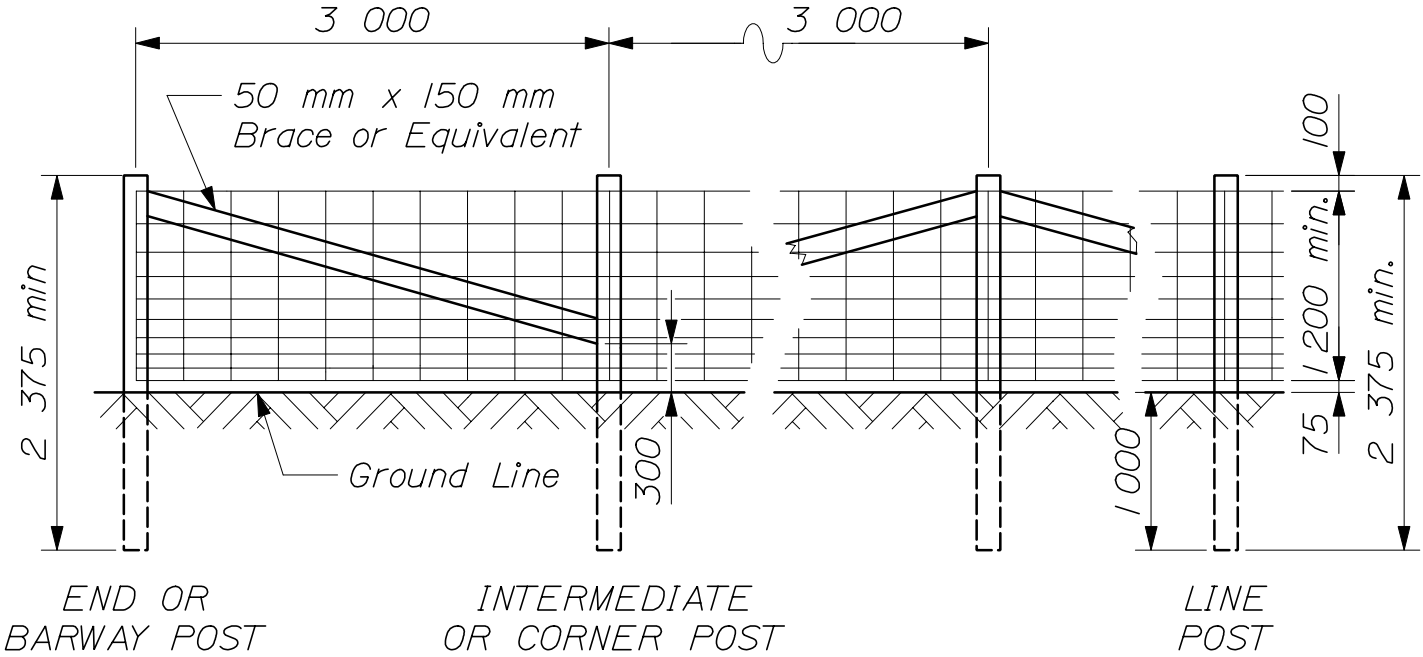

NOTES:

1. Staples for wood posts are to be 4 mm x 40 mm placed according to the Standard Specifications.

2. All end, corner, barway, and intermediate posts shall be braced as shown.

~ WOVEN WIRE FENCING - WOOD POSTS ~

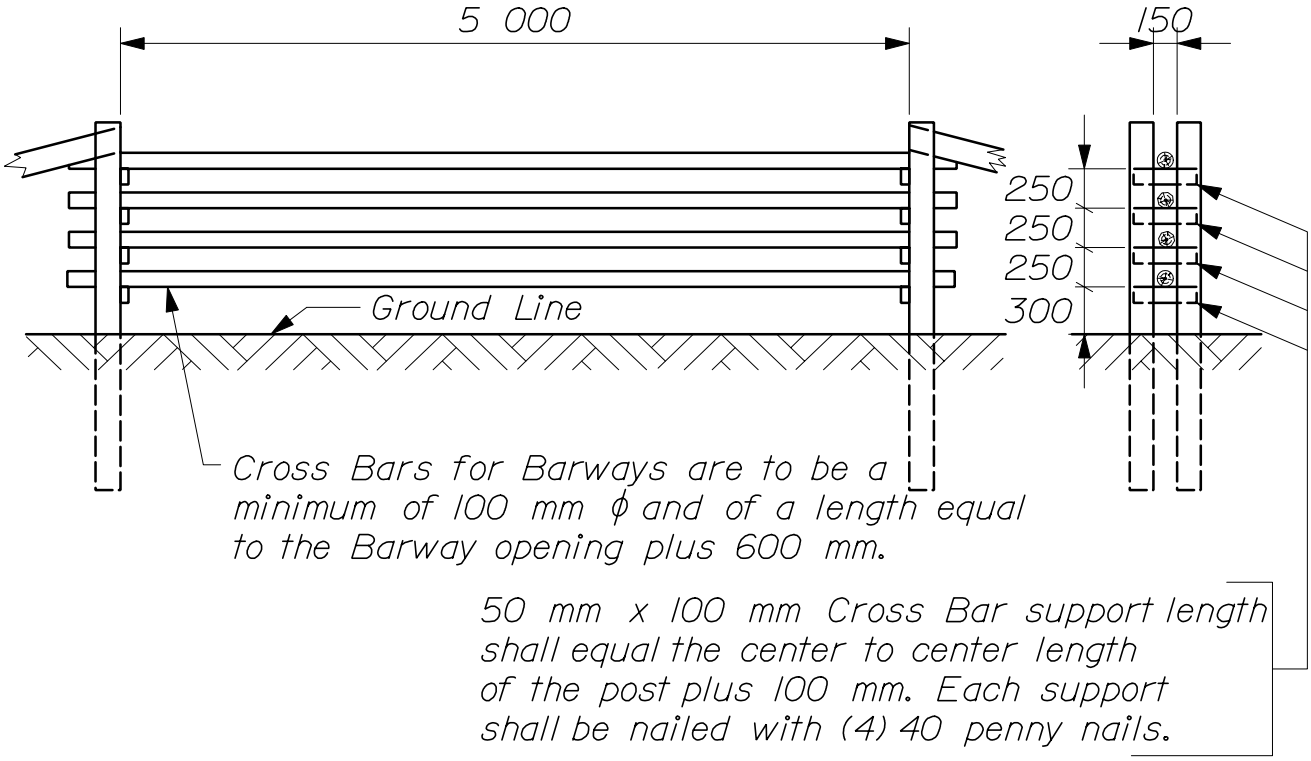

~ BARWAYS - WOOD POSTS ~

FENCING

607(03)

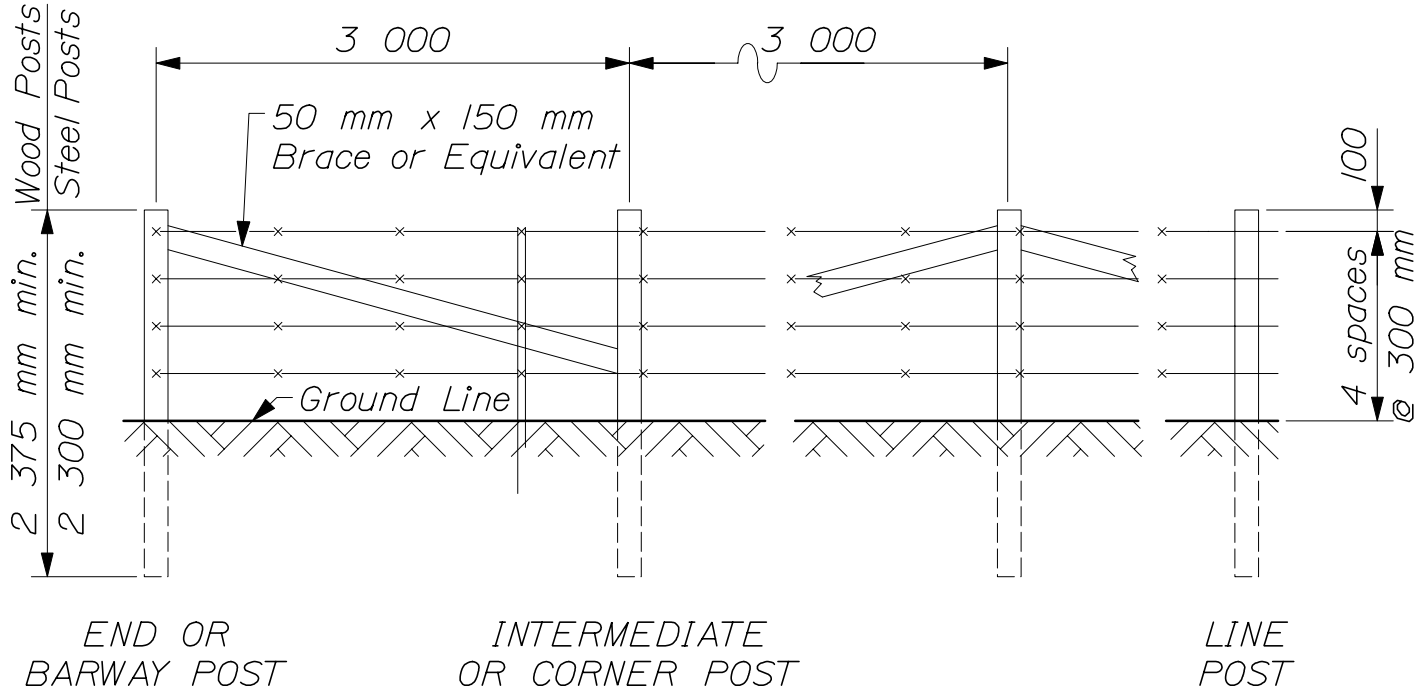

NOTE:
"Barbed Wire - Metal Posts" shall be constructed with the post and wire spacing shown above. Metal posts and braces shall conform to all of the requirements noted and shown for "Woven Wire Fencing - Metal Posts", including concrete bases.

BARBED WIRE FENCING - WOOD POSTS AND BARBED WIRE FENCING - METAL POSTS

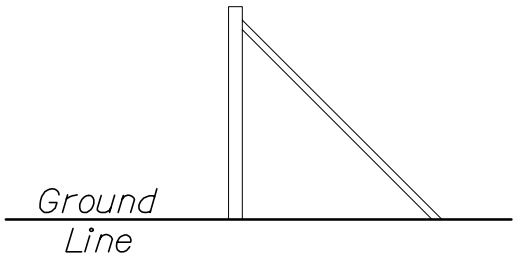

~ BRACING - TYPE I ~
used at gates, barways, and terminals

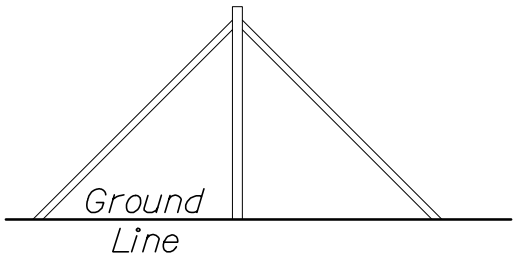

~ BRACING - TYPE II ~
used at corners, intermediate points, and changes in vertical alignment

BRACING ASSEMBLIES FOR WOVEN WIRE AND BARBED WIRE FENCING

607(04)

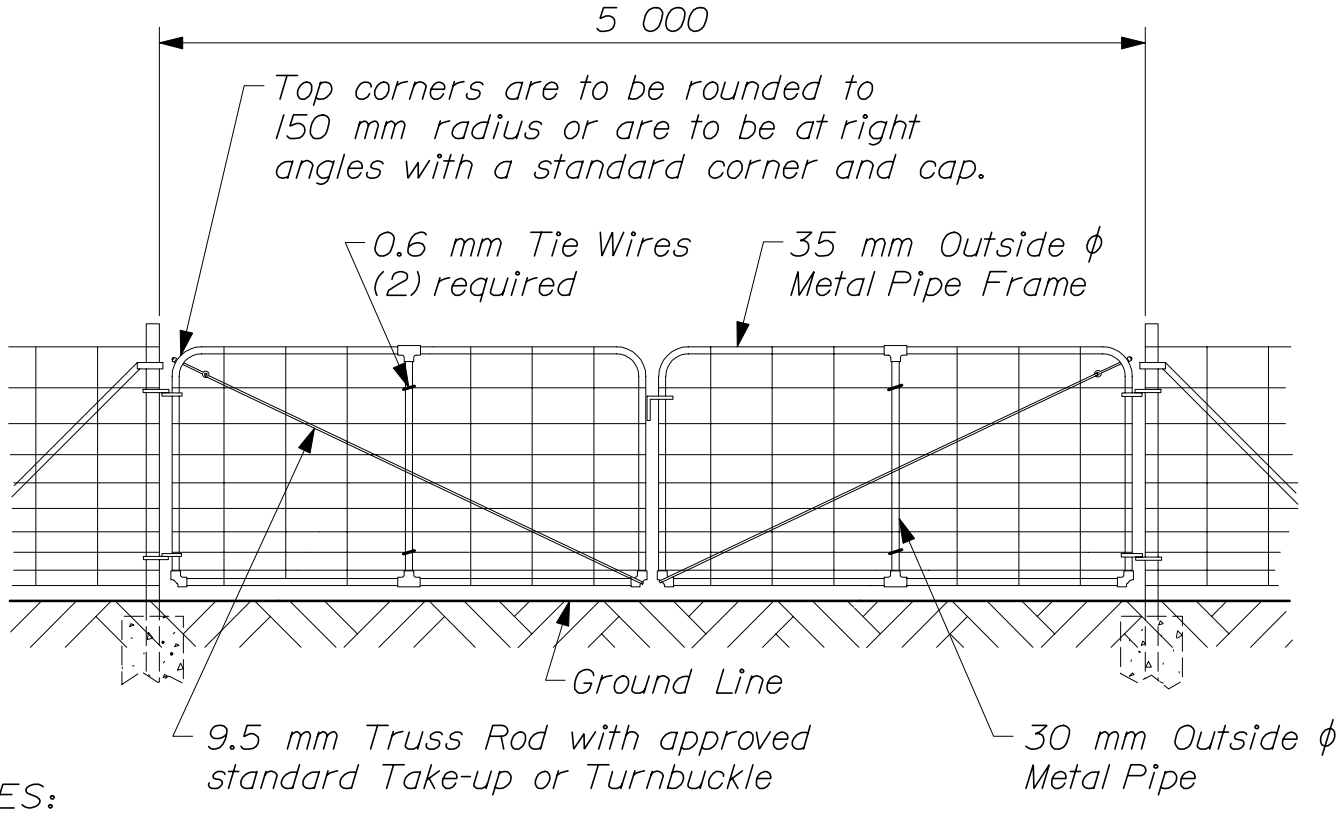

NOTES:

1. Gate posts, braces and anchorages to be as specified under "Woven Wire Fencing - Metal Posts".

2. All gates shall be installed with the top hinge point pointing down.

3. Wire for gates shall conform to A.S.T.M. A116, Class 1, Design No. 1047-12-11.

4. The required fittings for fence and gates shall be steel or malleable iron of an approved standard type.

5. Gates shall be furnished with a standard fork latch and one piece of 5 mm straight link alloy steel chain, 600 mm long. One end shall be attached to the gate frame and attached to the other end shall be a snap lock or other approved fastening device.

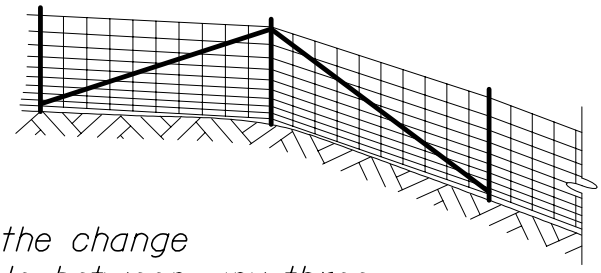

Where the change in grade between any three fence posts exceeds 15%, additional intermediate bracing shall be provided.

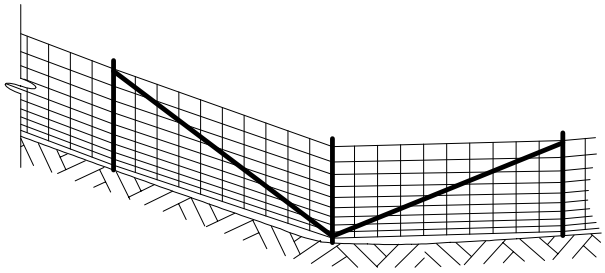

DRIVE GATEWAYS (5 METERS) & INTERMEDIATE BRACING

607(05)

In Medians and in Clear Zones the Top of Rail shall be omitted and replaced with 4.5 mm Galvanized Steel Wire.

5 500 min. length
Top Rail

Top Rail

150 mm minimum Expansion Sleeves

600 max.

3.5 mm or (2) 2 mm Steel Fasteners or Approved Equal

Barbands 19 mm x 3 mm if required

Chain Link Fabric 50 mm Mesh 3.5 mm Barbed Finish

Brace Rail

Stretcher Bar 19 mm x 5 mm if required

3.5 mm or (2) 2 mm Steel Fasteners for Tubular Posts or Approved Equal

375 max.

Adjustable Tie Rod (75± mm Take-Up) 10 mm Round

Ground Line

3 000 C/C max.

3 000 C/C max.

END OR CORNER POST

LINE POST

LINE POST

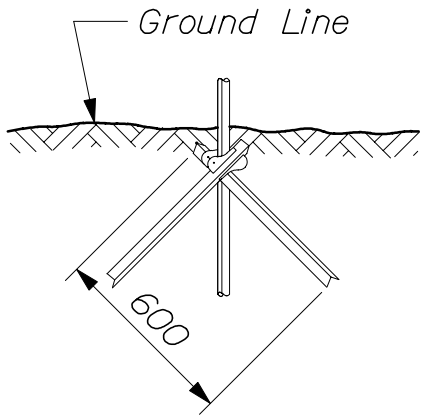

~ DRIVE ANCHOR ~
(90° to Fence Line)

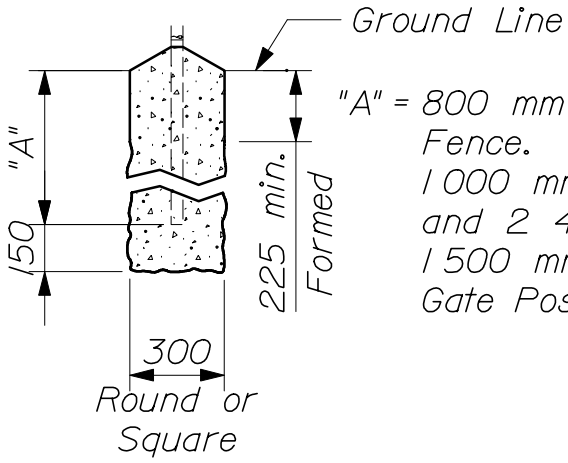

"A" = 800 mm for 1 220 mm Fence.
1 000 mm for 1 830 mm and 2 440 mm Fences.
1 500 mm for all end and Gate Posts.

~ LINE, CORNER, AND ~
END POST BASE

CHAIN LINK FENCE

607(06)

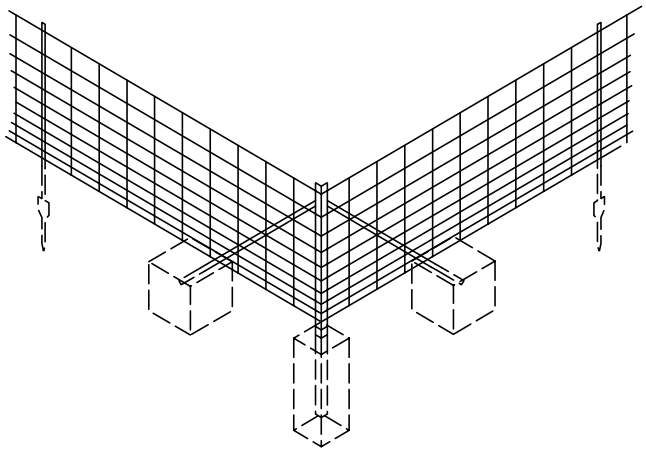

Corner Post

~ BRACING ASSEMBLY ~
FOR METAL POSTS

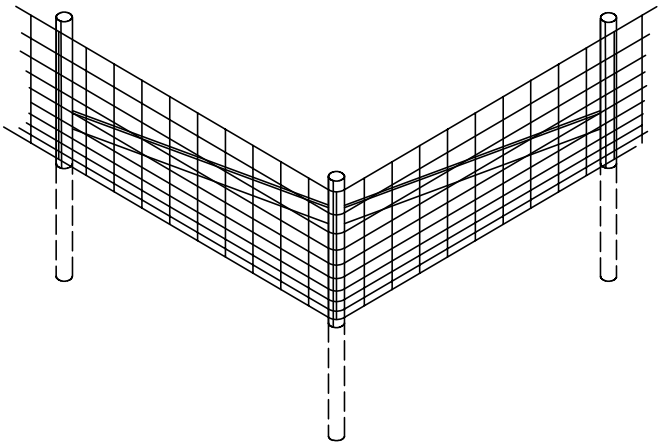

Corner Post

~ BRACING ASSEMBLY ~
FOR WOOD POSTS

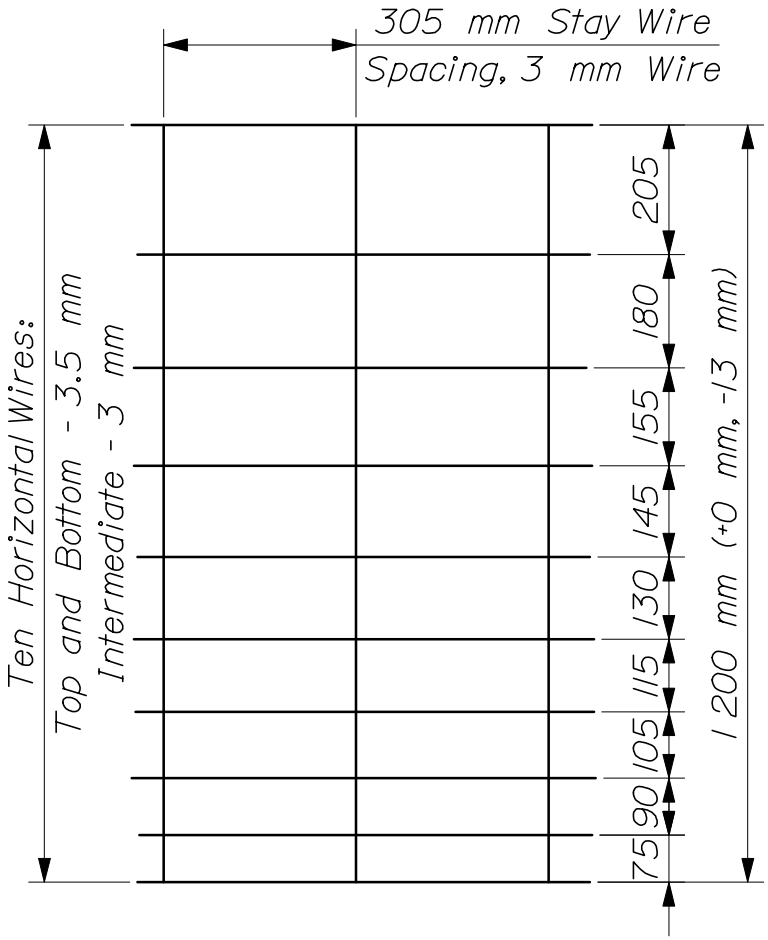

~ WOVEN WIRE FENCE ~

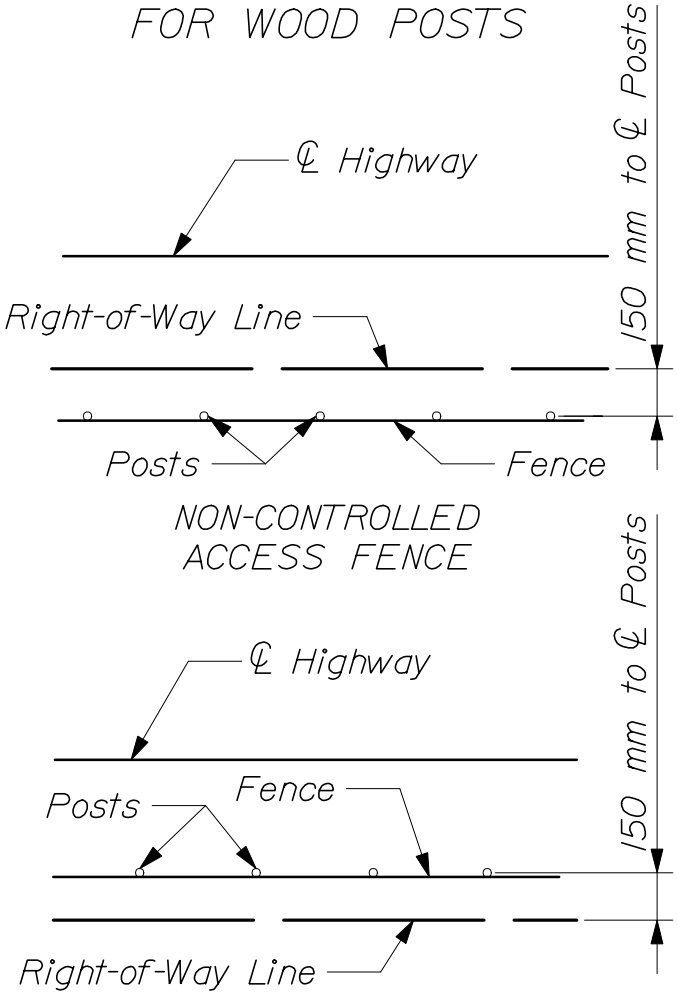

FENCE LOCATION
~ WITH RESPECT TO ~
RIGHT OF WAY LINE

FENCING

607(07)

GENERAL NOTES

1. When ledge is encountered, steel posts shall be set and grouted 300 mm deep unless the posts penetrate the ground to the depth indicated on the drawings.

2. When wood posts are used, braces shall be attached to the posts with a minimum of (4) 40 penny nails per attachment.

3. When the word "Standard" is used, it shall be interpreted as if it were followed by the expression "To The Fence Industry".

4. Woven wire and barbed wire fencing shall be attached to wood posts with 4 mm x 40 mm galvanized staples.

5. Concrete for post foundations shall be Class B.

6. In well formed holes with vertical walls, forms will be required only at the top 225 mm. Holes which cannot be well formed shall have forms for the full depth of the base.

SPACING OF FENCE POSTS ON CURVES

RADIUS OF CURVE AT FENCE LOCATION	NORMAL POST SPACING
Over 150 m	3.0 m
Over 60 m to 150 m	2.5 m
Over 30 m to 60 m	2.0 m
30 m and Less	1.5 m

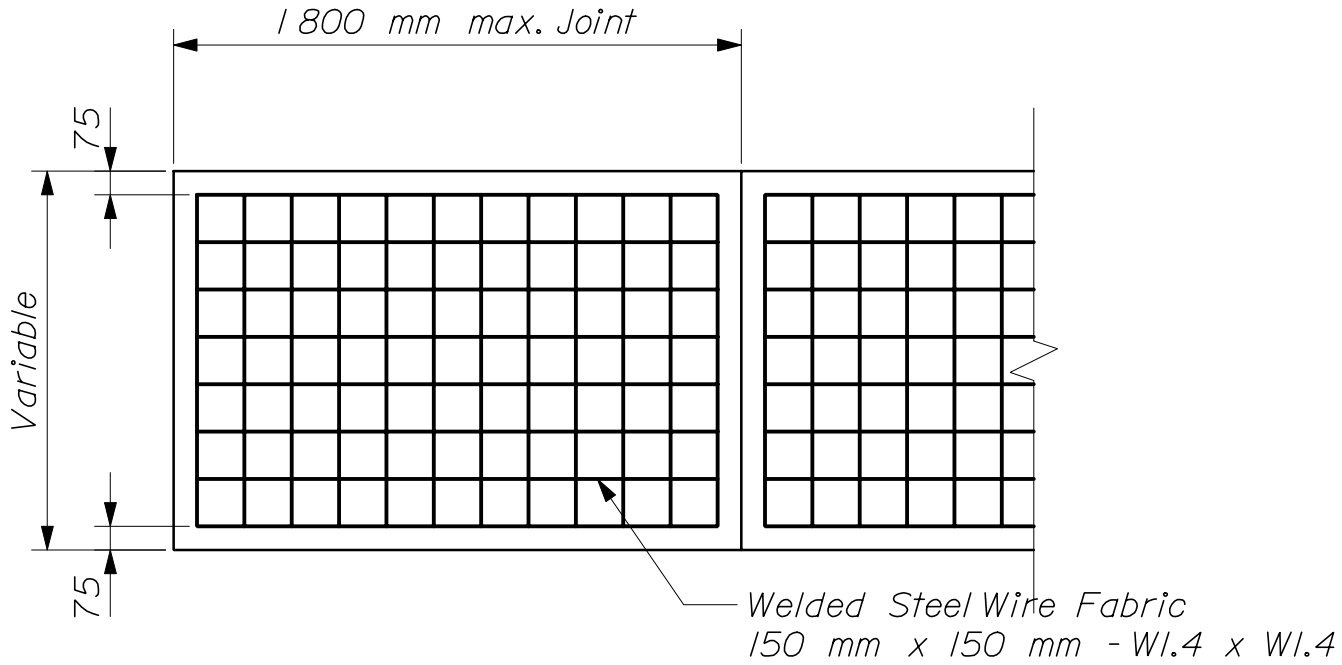

~ PLAN ~

NOTE:
Sidewalk shall conform to Standard Specifications Section 608.

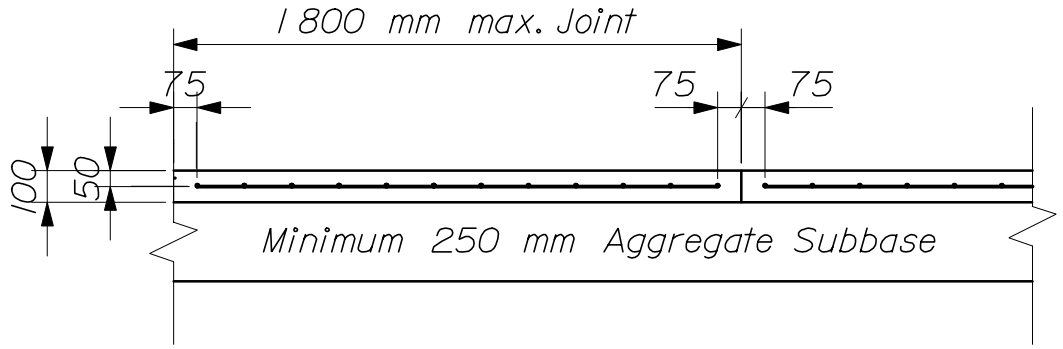

~ ELEVATION ~

REINFORCED PORTLAND CEMENT CONCRETE SIDEWALK

608(01)

CURB TYPES 1, 2 & 5 ON CURVES				
TYPE	RADIUS OF CURVE	LENGTH	PAID FOR AS	STONE IS CUT OR CAST
1 & 2	0 to 20 m incl.	1 200 min.	Circular	Arc to Fit Curve
	20 m to 50 m	1 200 to 1 800	Straight	Straight Pieces
5	0 to 2.5 m incl.	600 min.	Circular	To Fit Curve
	2.5 m to 10 m incl.	300 min. Chord	Circular	Str. Pieces, Radial Ends
	10 m to 50 m incl.	600 to 1 000	Straight	Straight Pieces
	50 m and over	1 000 to 1 800	Straight	Straight Pieces

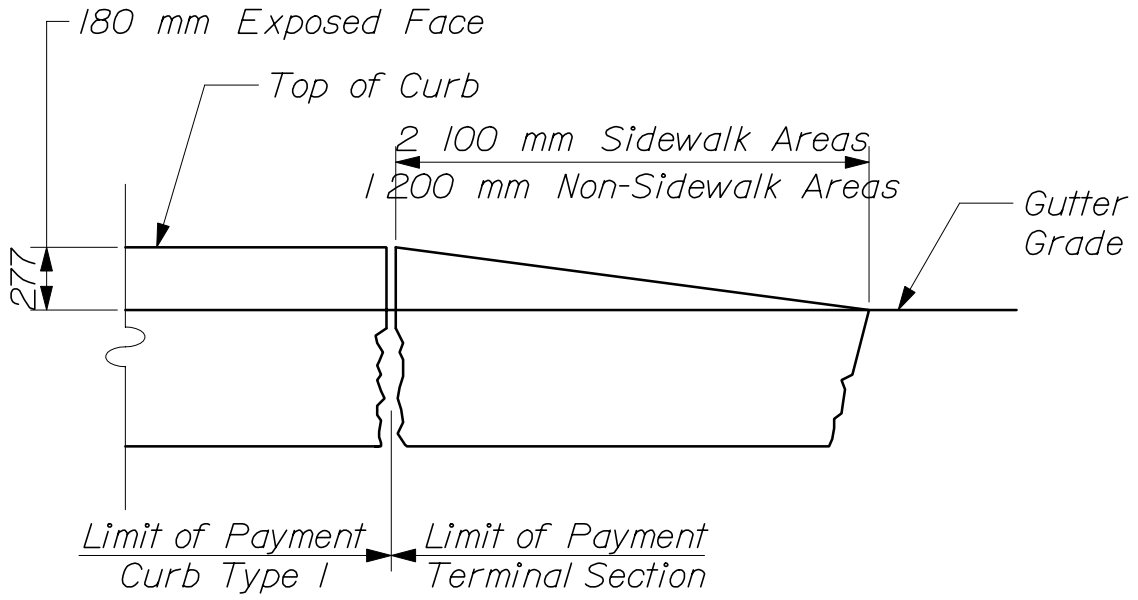

~ TERMINAL SECTION TYPE "1" ~

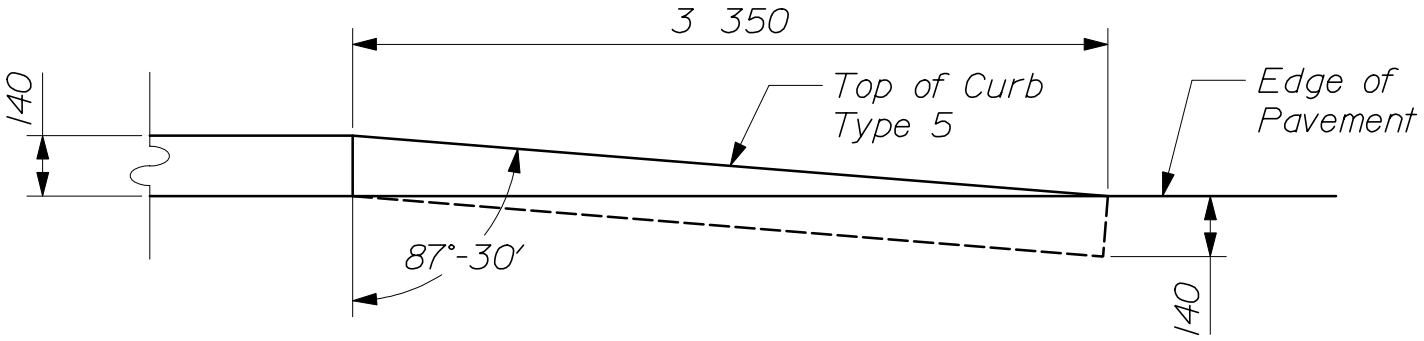

~ TERMINAL SECTION TYPE "5" ~

(use when shown on plans only)

TERMINAL CURB SECTION

609(01)

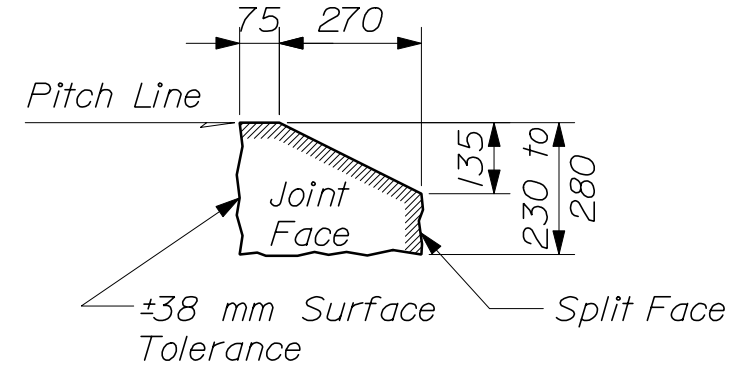

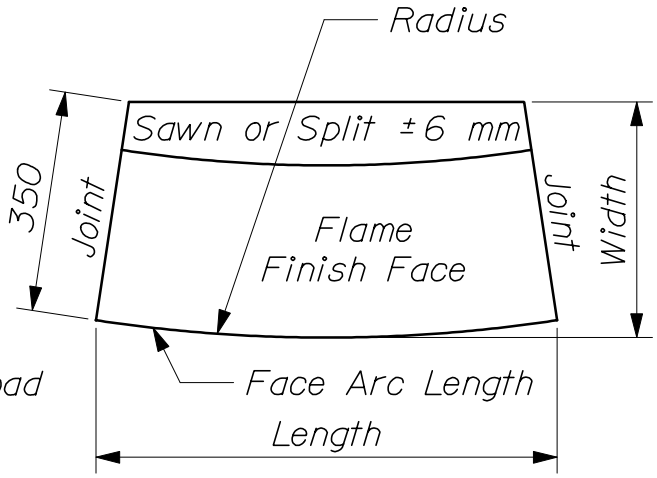

Approved Alternate Circular Curb Type 5
600 mm to 2 500 mm Radius

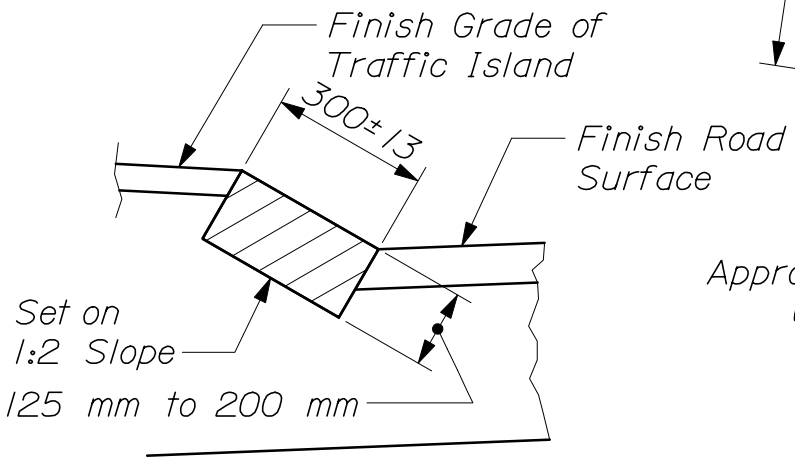

1 000 mm min. Length

~ CURB TYPE 5 ~

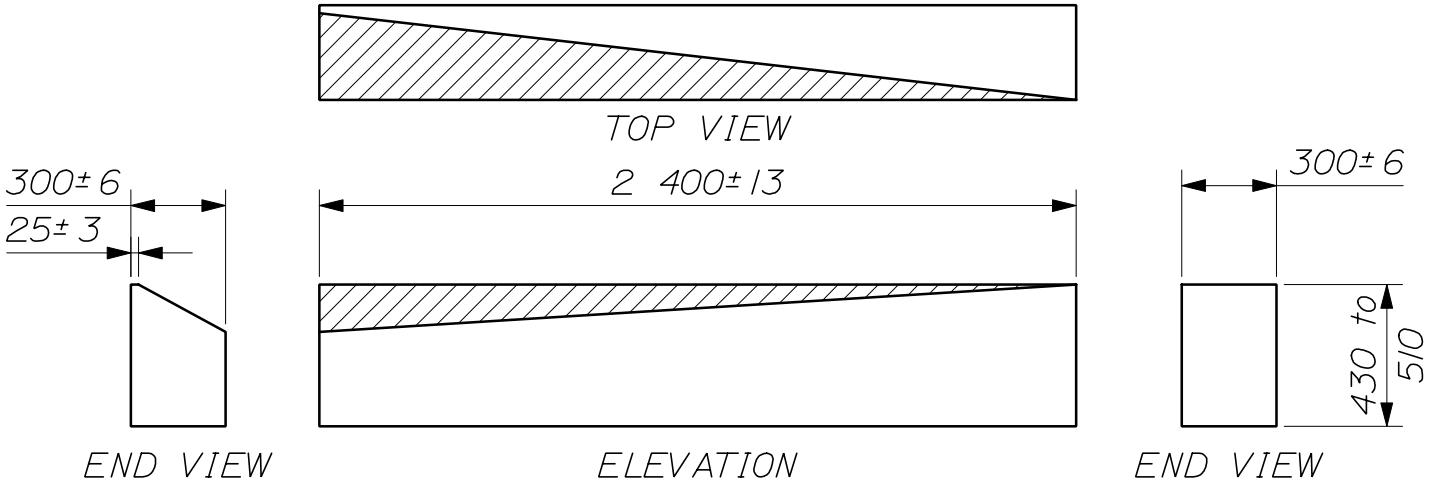

Transition Section "B"
Curb Type "5" to Vertical Curb Type "1" & Type "2"

~ CURB TRANSITION ~

CURB
609(02)

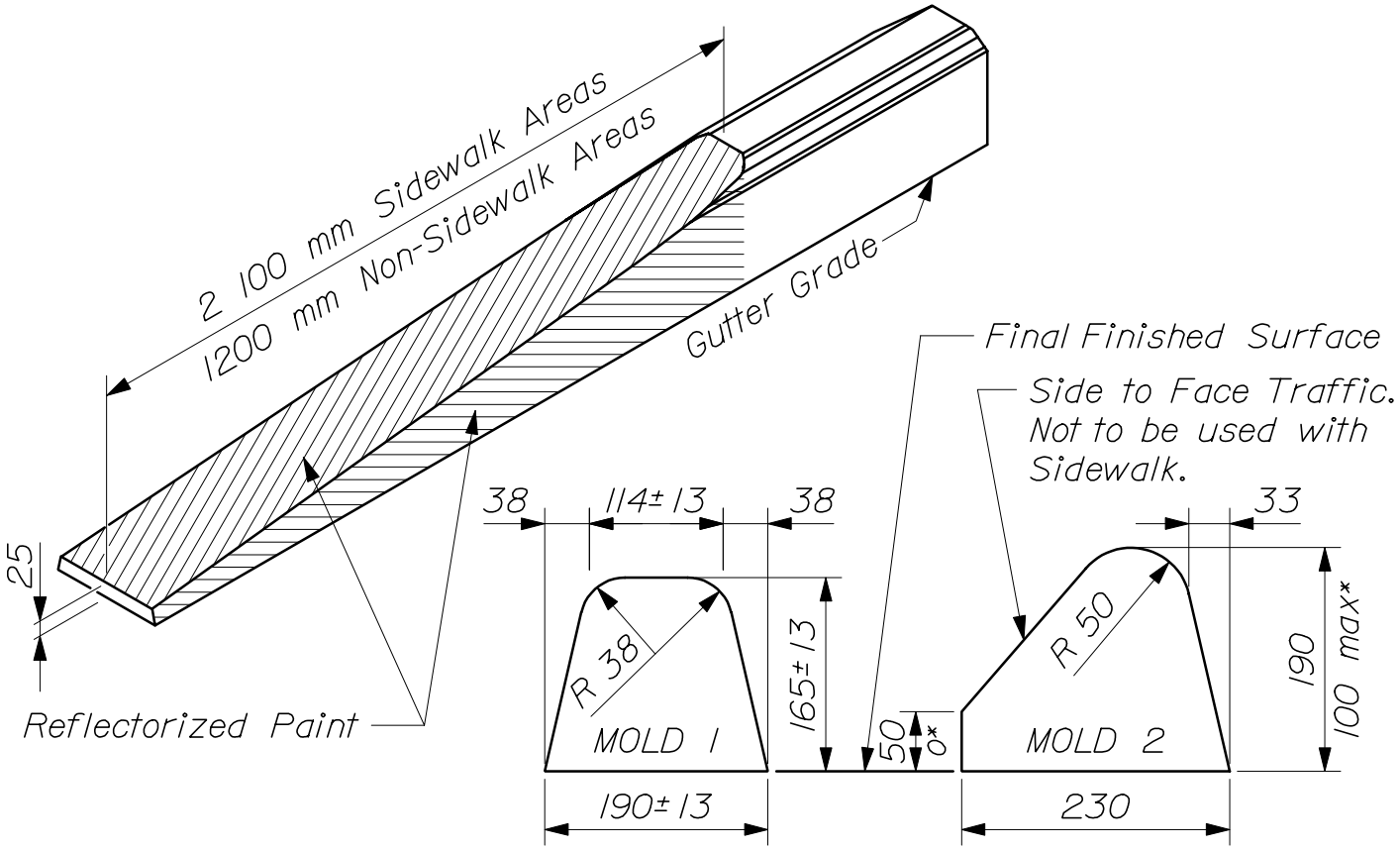

~ CURB TYPE 3 ~

Curb Mold 2 will be used in all situations except for where the curb forms the edge of the sidewalk. Mold 1 shall be used in conjunction with sidewalks or where there is a potential for sidewalks.

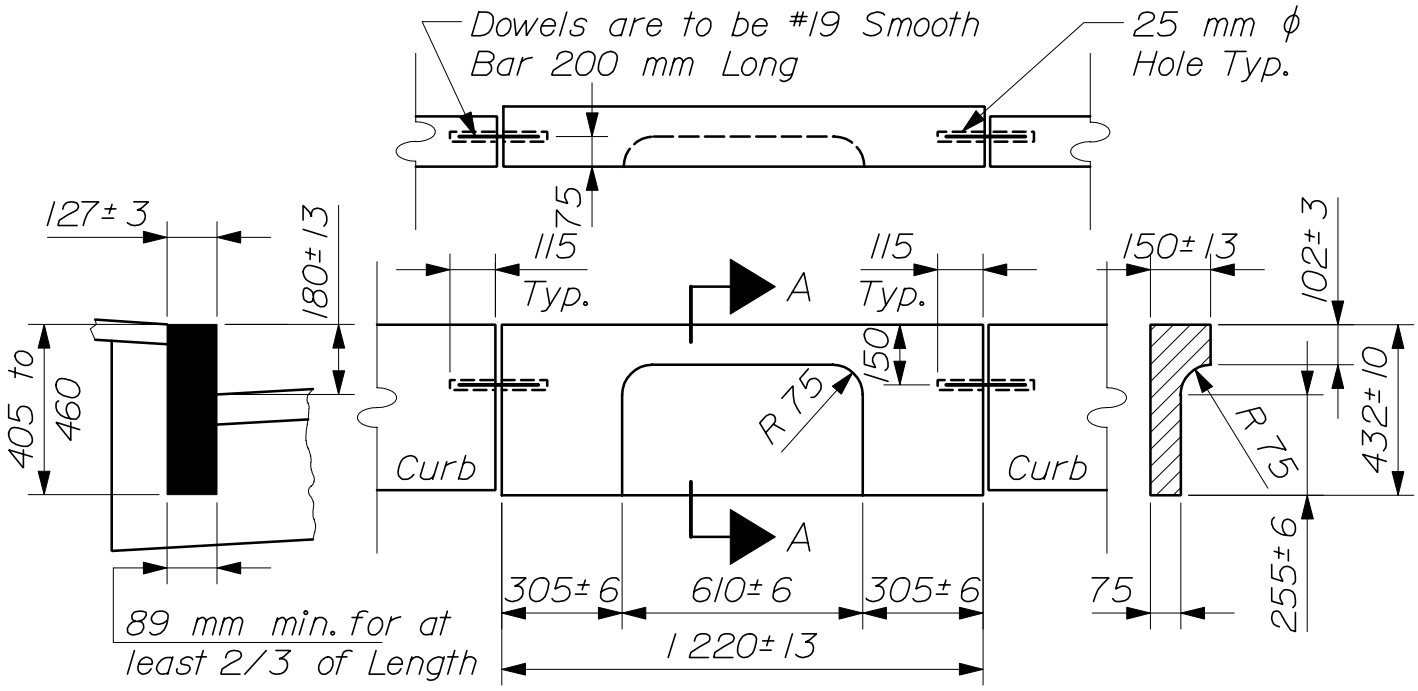

~ VERTICAL CURB ~
TYPE 1

~ SECTION A-A ~

~ CURB INLET TYPE 1 ~

CURB
609(03)

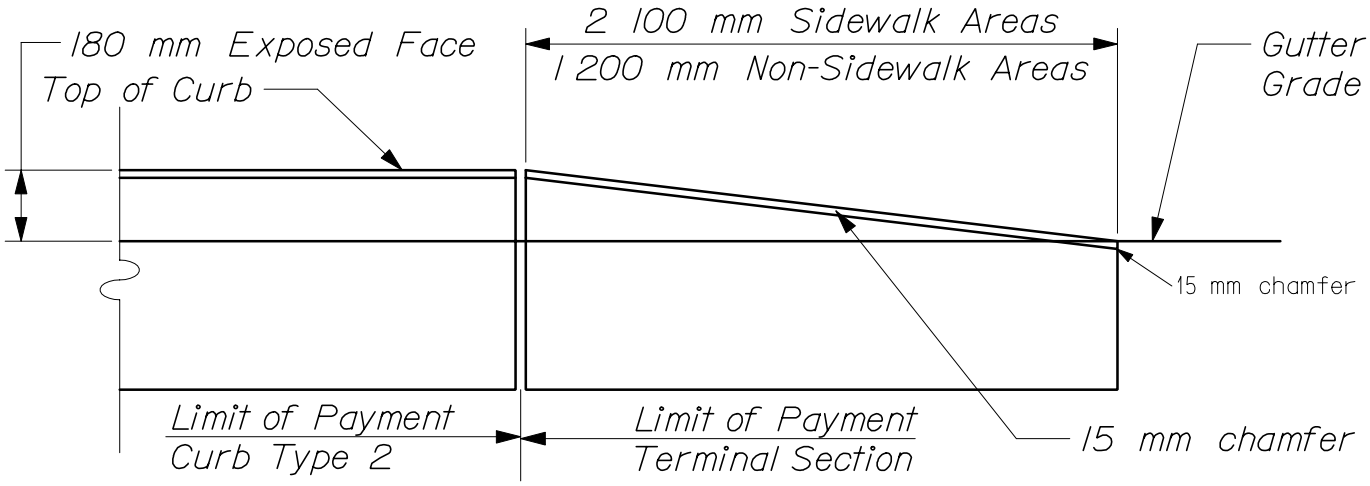

~ TERMINAL SECTION TYPE 2 ~

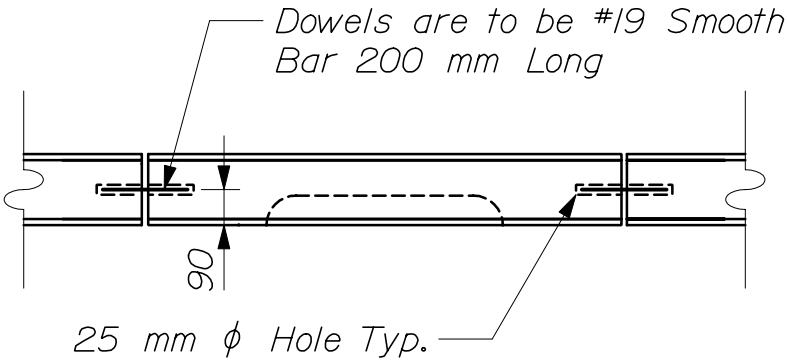

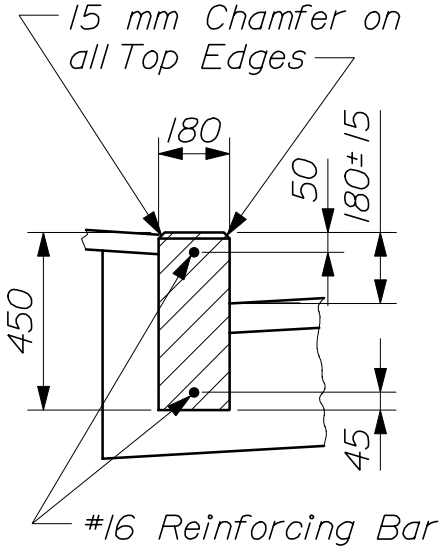

~ VERTICAL CURB ~
TYPE 2

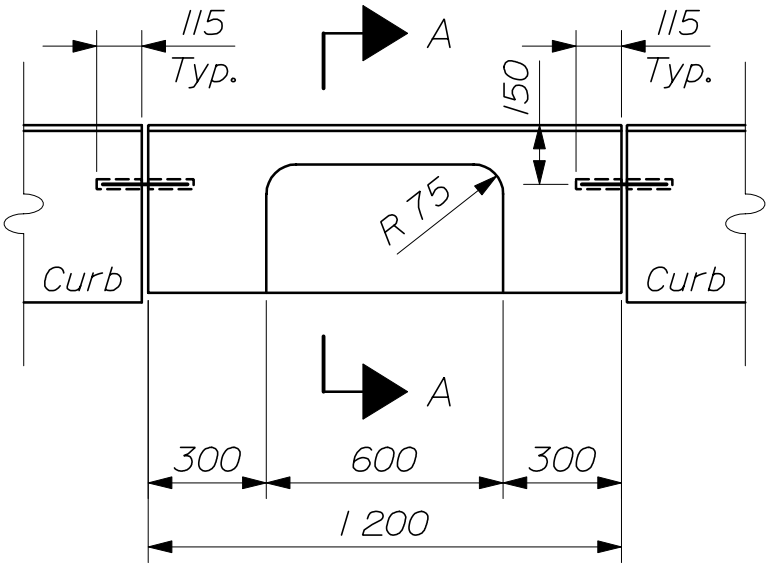

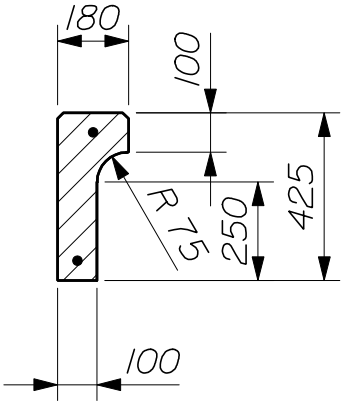

~ CURB INLET TYPE 2 ~

~ SECTION A - A ~

# CURB
609(04)

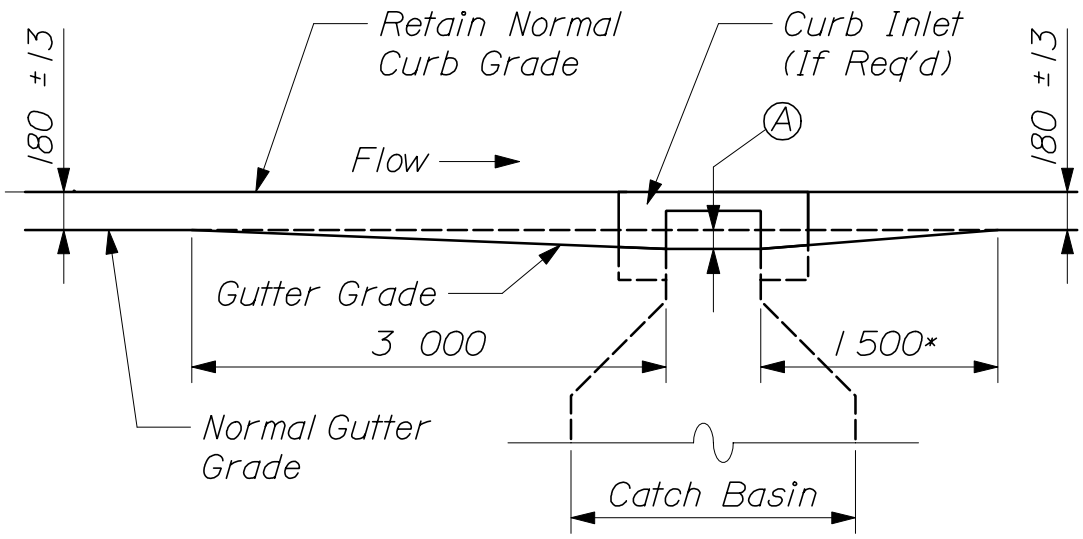

~ AT CURB INLETS ~

(A) For Parking Lane = 50 mm
Adjacent to Travel Lane = 0 mm

* Dimension to be 3 000 mm if at bottom of a sag.

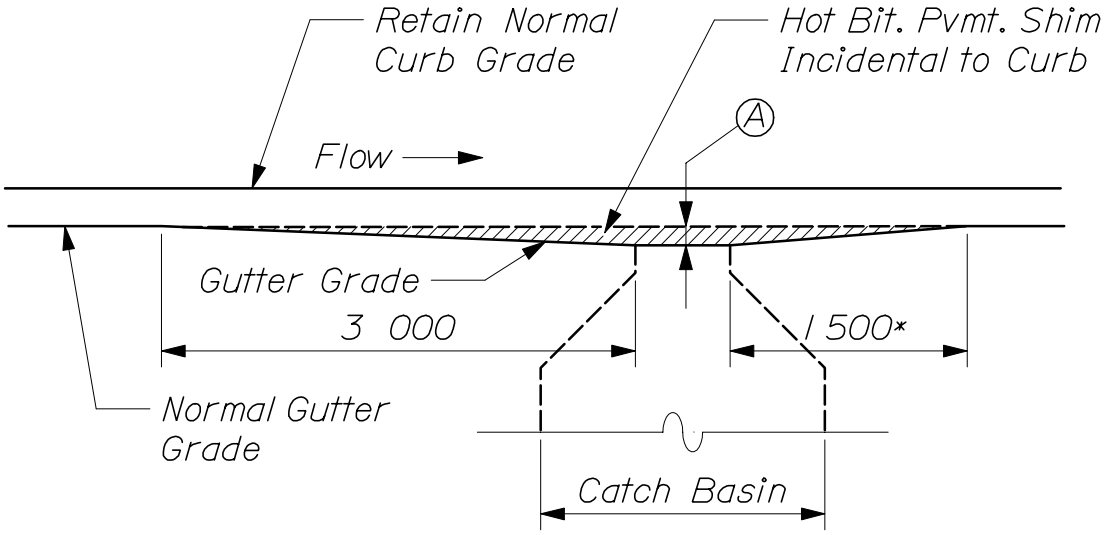

~ AT CURB WITHOUT INLET STONES ~

NOTE:
Grates shall be installed on gradient of the gutter and be depressed 50 mm below the normal gutter grade unless this depression interferes with traffic.

GUTTER GRADE TRANSITION AT CATCH BASIN

609(05)

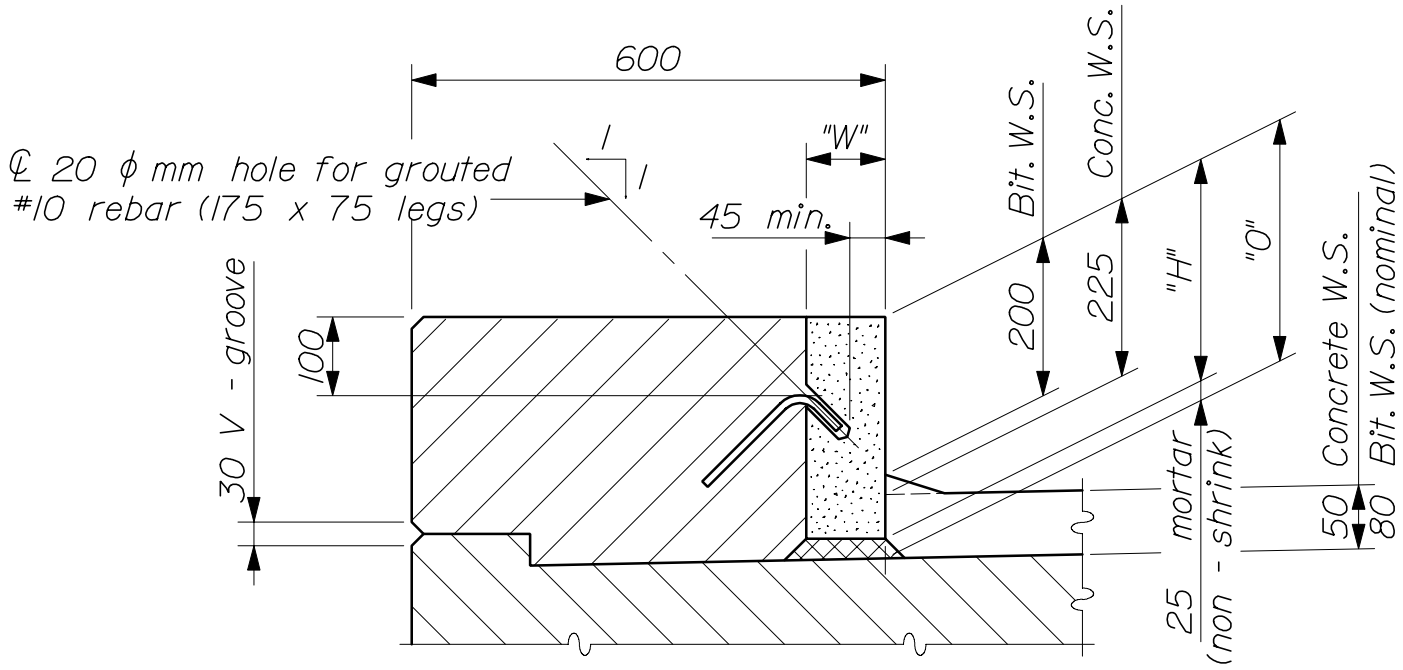

-- VERTICAL BRIDGE CURB DETAIL --

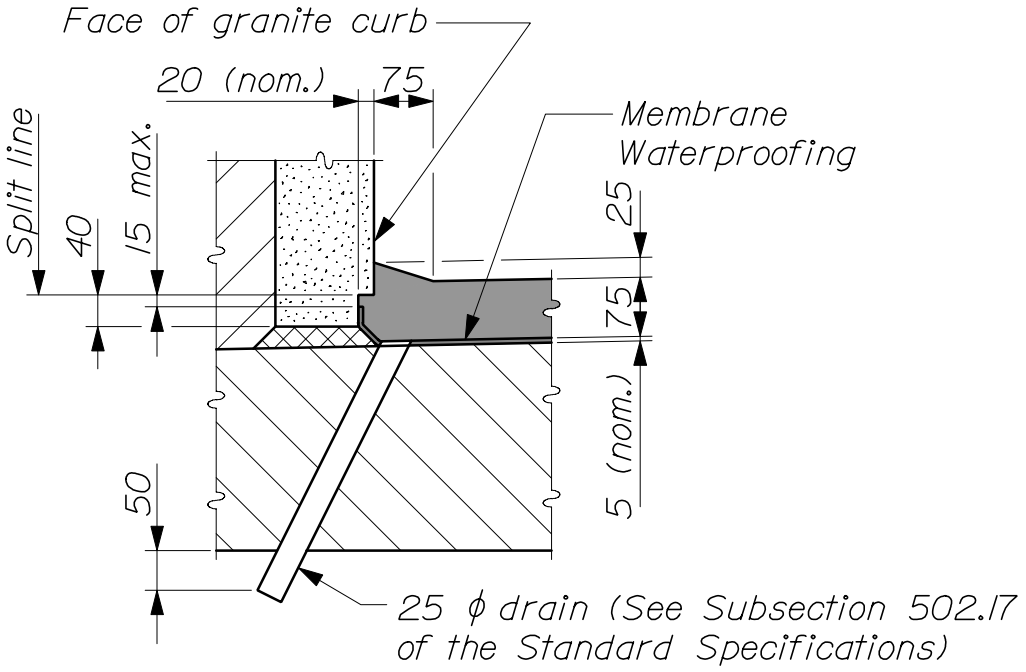

TABLE OF DIMENSIONS	
Type IA (Concrete W.S.)	
"W"	100 5
"H"	250 5
"O"	275
Type IB (Bituminous W.S.)	
"W"	125 5
"H"	280 5
"O"	305

-- TYPE IB NOTCH DETAIL --

VERTICAL BRIDGE CURB

609(06)

BITUMINOUS CONCRETE BERM - TYPE "A"

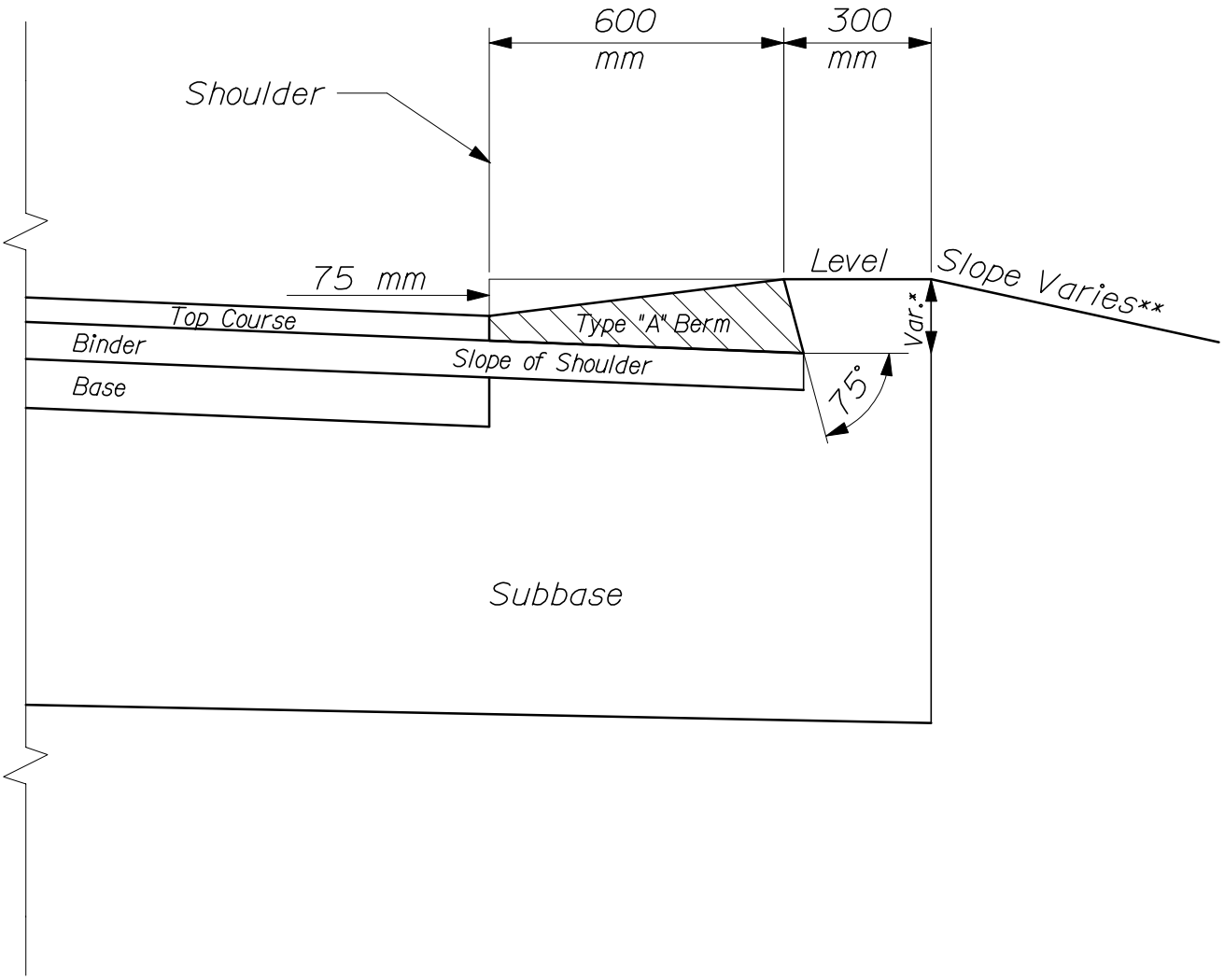

* This dimension varies with the thickness of the top course and slope of shoulder.

* * See typical sections for project.

SPECIAL CURB - CAPE COD DESIGN

609(07)

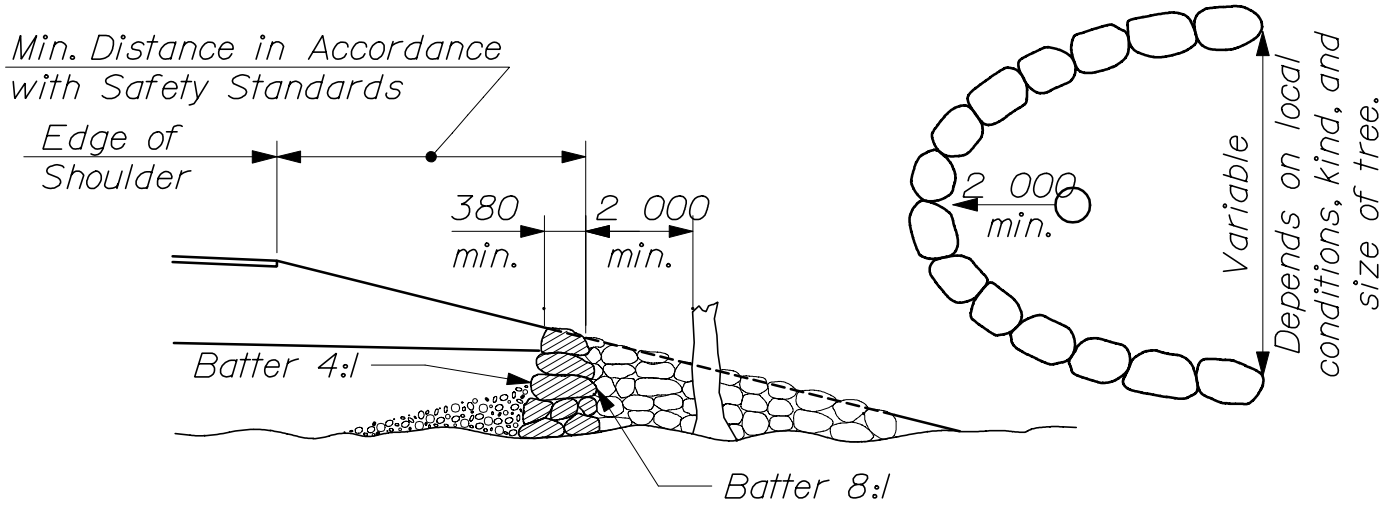

-- OPEN WELL --

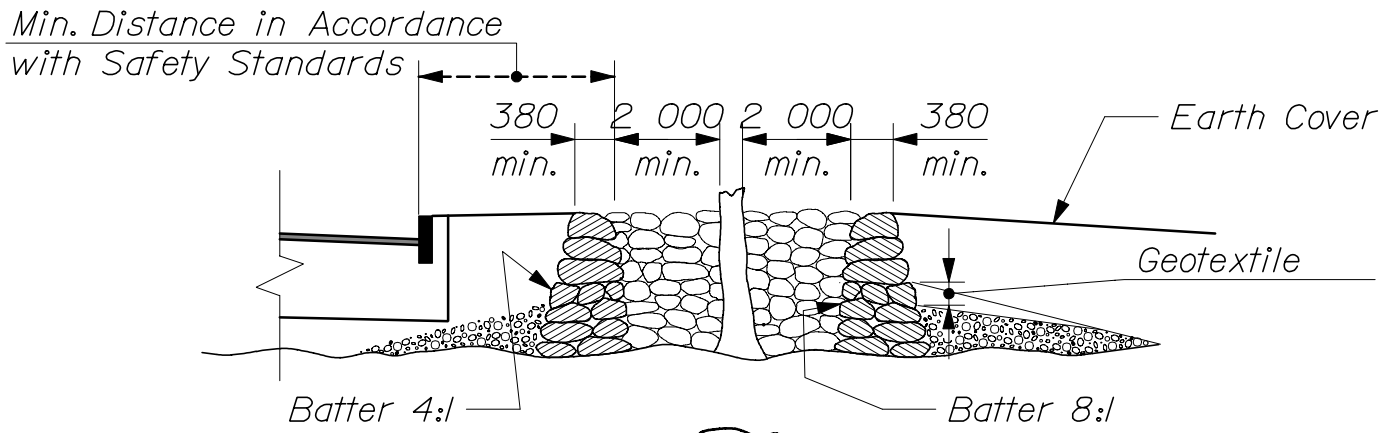

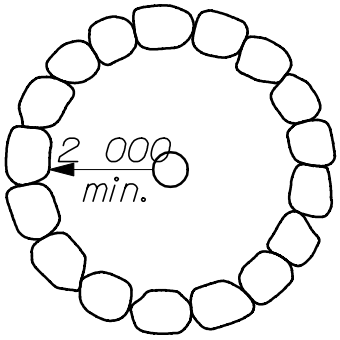

-- CLOSED WELL --

NOTES:

1. Selected ledge excavation, crushed stone or other porous material shall be used to fill around the old ground area of the tree from the tree well to the perimeter of the branches.

2. A Geotextile to prevent infiltration of fines shall be placed over the rock fill.

3. If drainage away from the tree well is necessary, Underdrain Outlet Pipe shall be used, and will be paid for under Item 605.10 150 mm Underdrain Outlet.

4. The Tree Wells shall be paid for under Item 610.09 Hand Laid Riprap.

TREE WELLS

610(01)

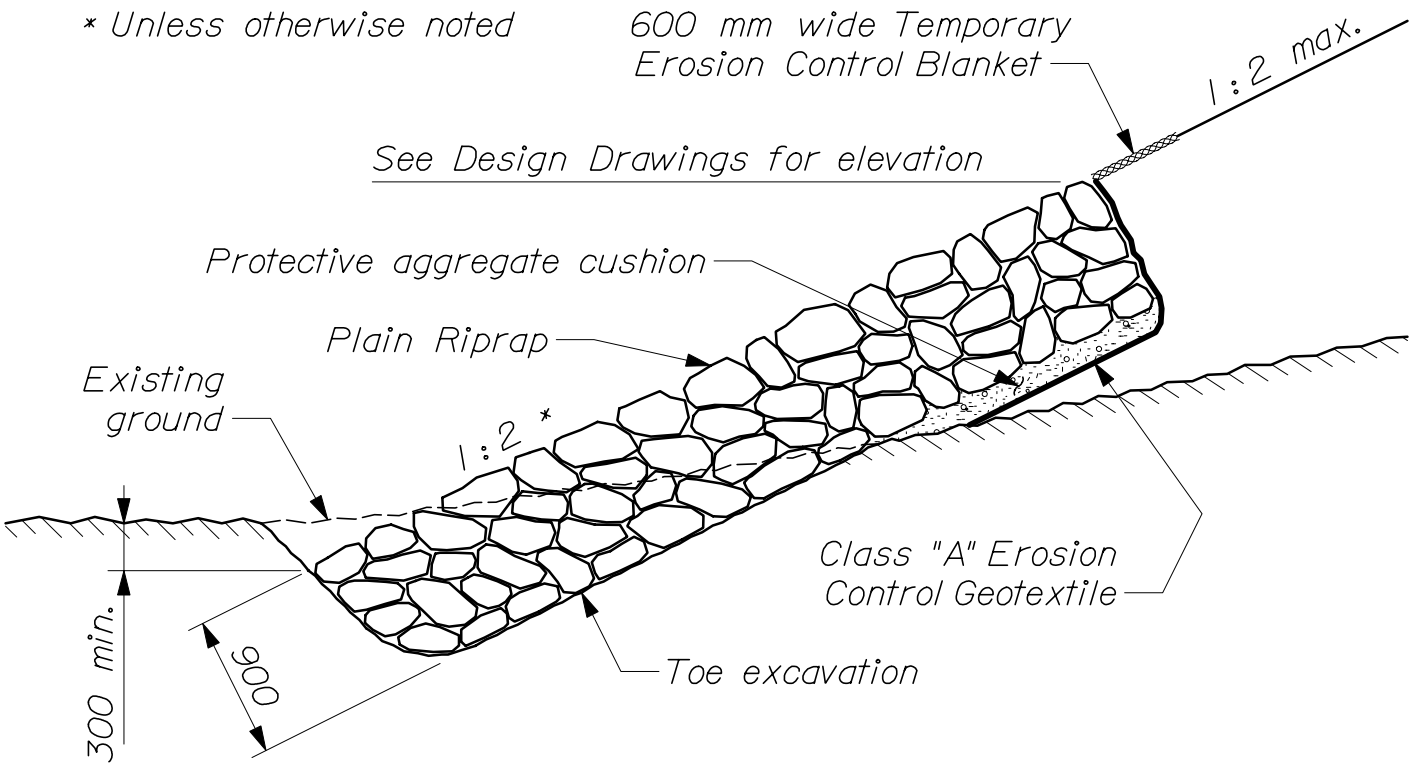

-- PLAIN RIPRAP SIDE SLOPE --
(Refer to Page 620(05) for specific details on geotextile placement)

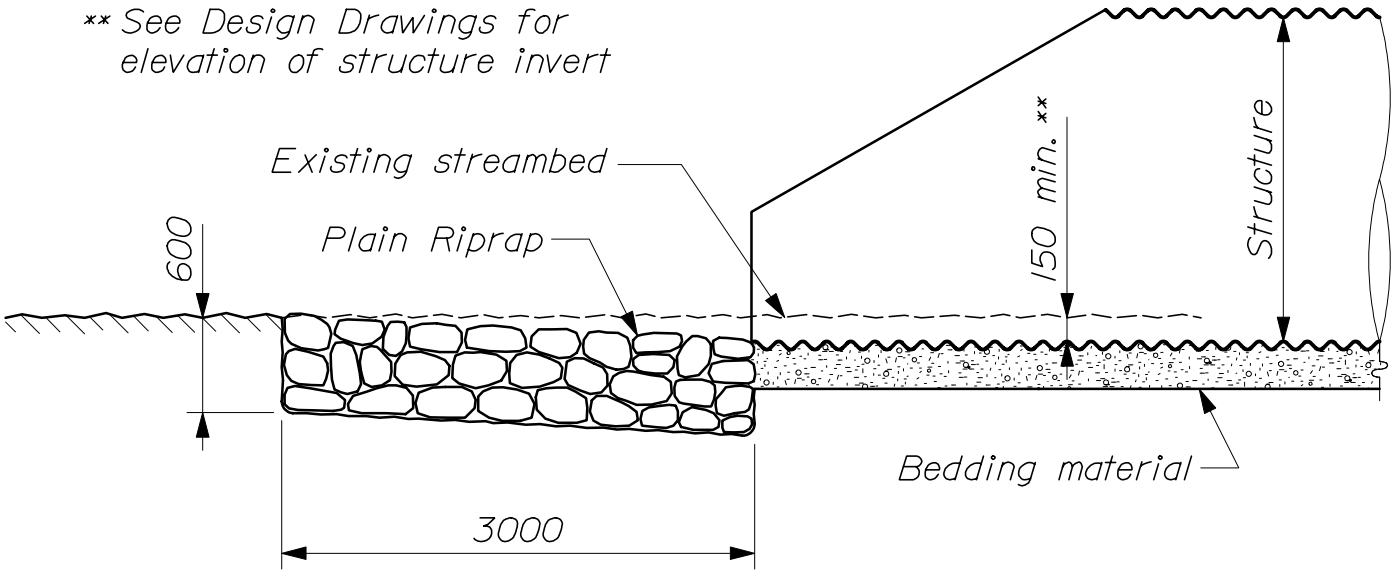

-- PLAIN RIPRAP APRON --

STONE SCOUR PROTECTION

610(02)

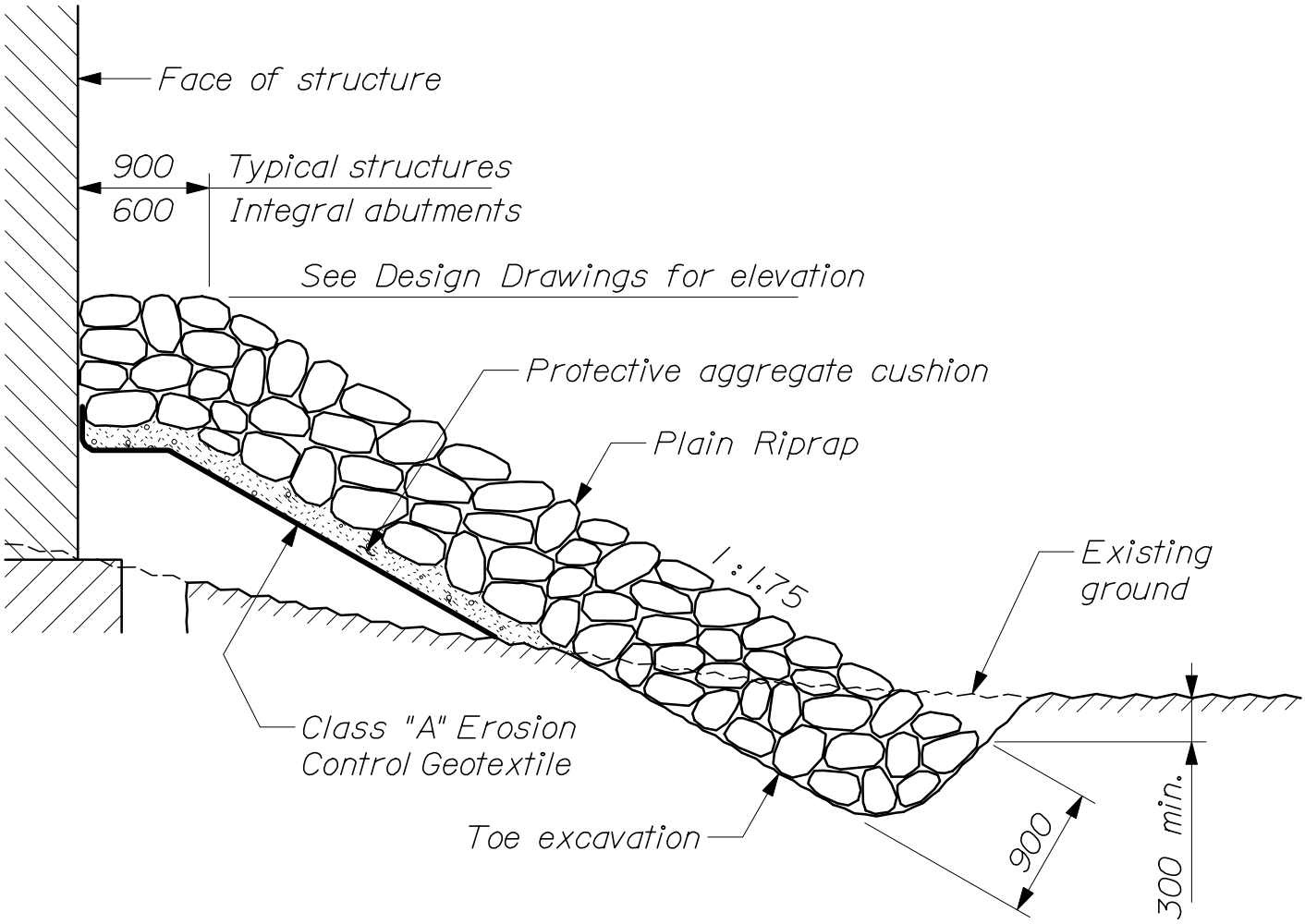

-- PLAIN RIPRAP SLOPE AT STRUCTURES --
Refer to Page 620(05) for specific details on geotextile placement

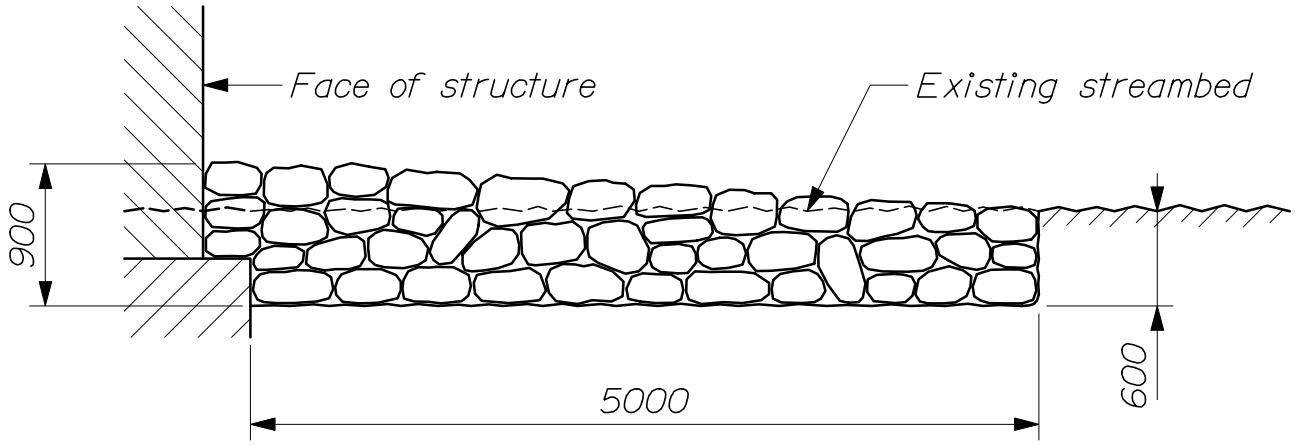

-- STONE BLANKET --

STONE SCOUR PROTECTION

610(03)

STONE SCOUR PROTECTION

610(04)

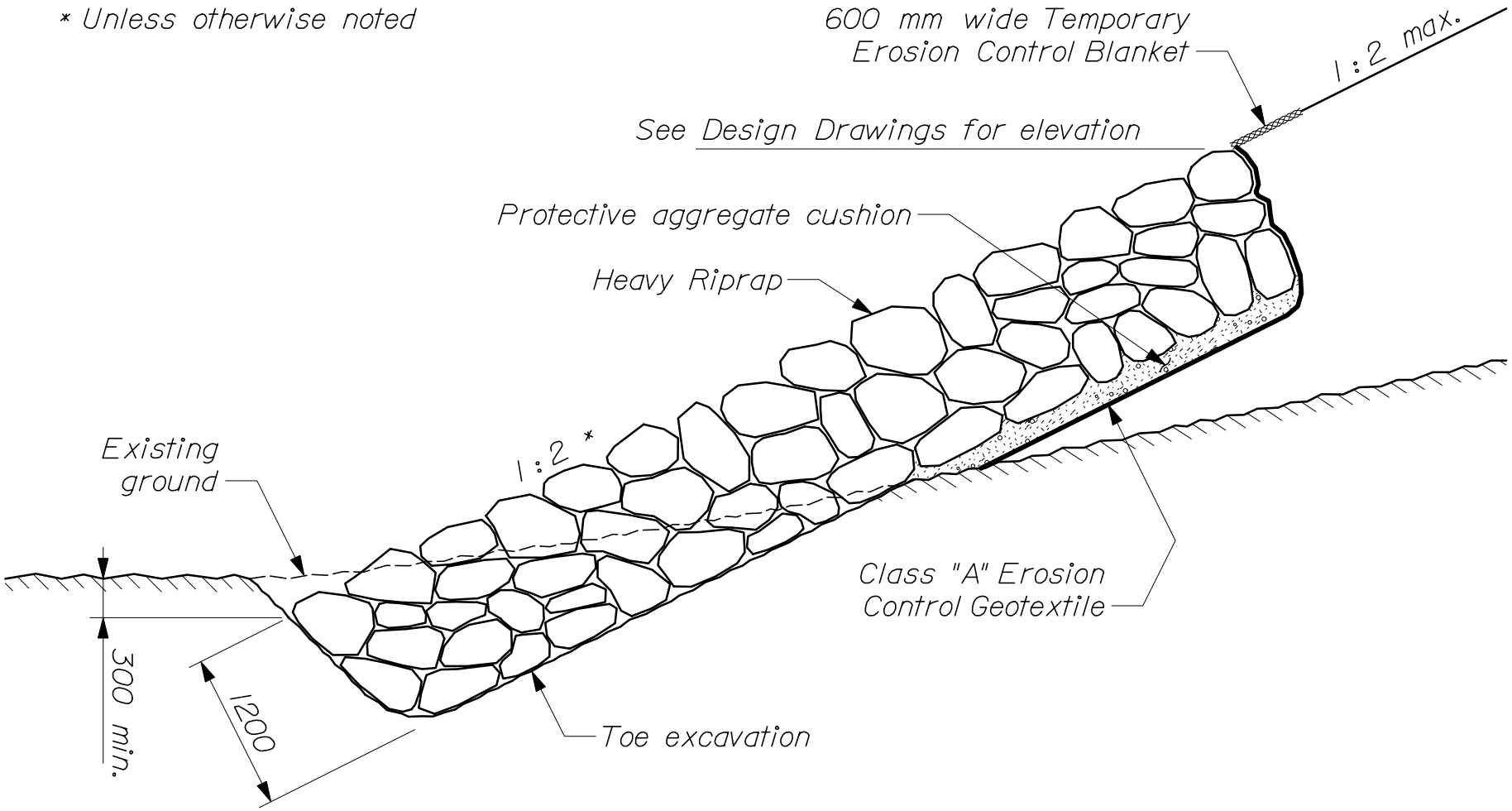

-- HEAVY RIPRAP SIDE SLOPE --
(Refer to Page 620(05) for specific
details on geotextile placement)

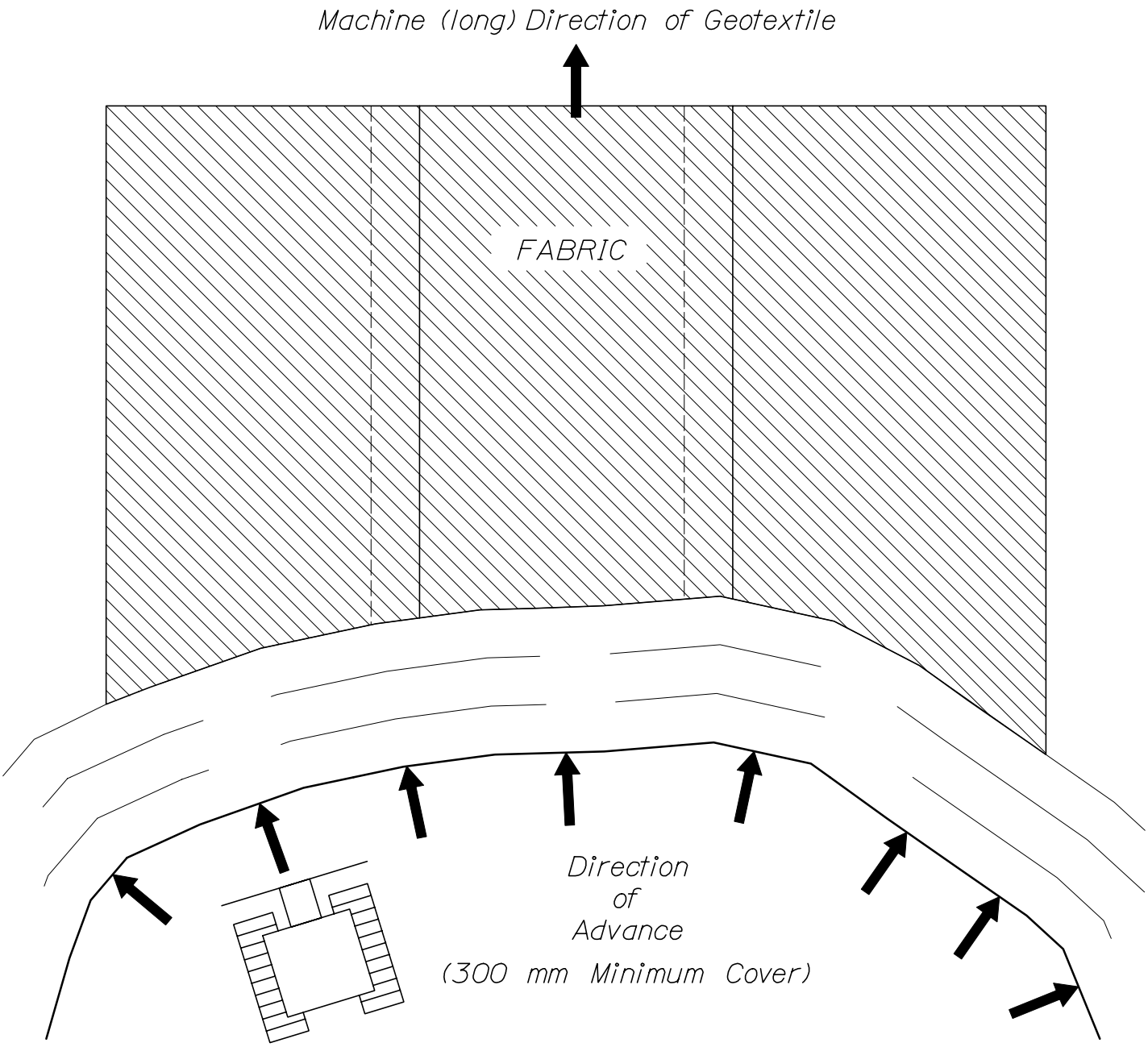

PLACEMENT OF FIRST LIFT OF COVER MATERIAL TO
~ TENSION GEOTEXTILE ON MODERATE GROUND CONDITIONS ~
(NO MUD WAVE).

GEOTEXTILE PLACEMENT

620(01)

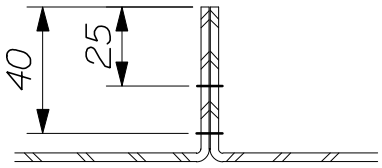

FLAT or PRAYER Seam
Type SSA-2

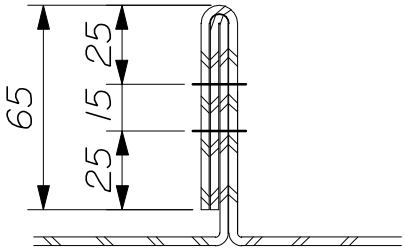

J Seam
Type SSN-1

~ TYPES OF SEAMS ~

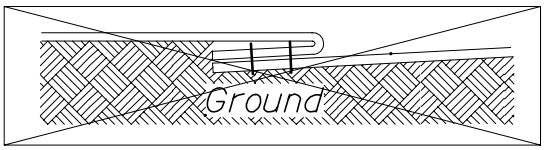

Improper Placement
(cannot inspect or repair)

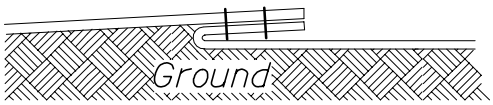

Proper Placement
(seam up)

~ SEAM PLACEMENT ~

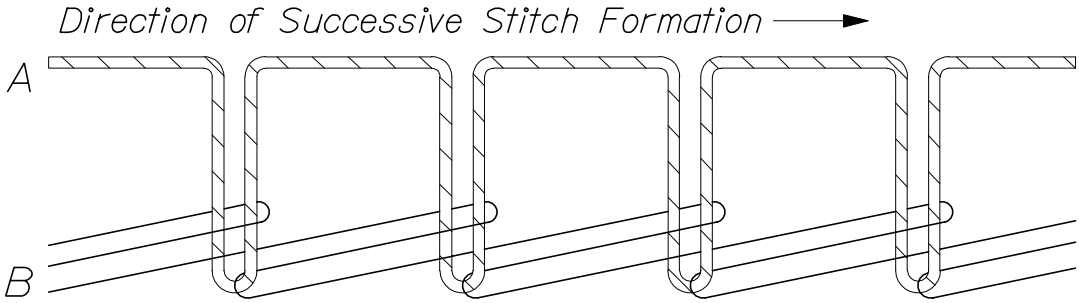

~ CLASS 401 TYPE STITCH ~

NOTE:
This type of stitch shall be formed with two threads: one needle thread "A", and one looper thread, "B". loops of thread "A" shall be passed through the material and interlaced and interlooped with loops of thread "B". The interloopings shall be drawn against the underside of the bottom ply of material.

GEOTEXTILE SEAMING

620(02)

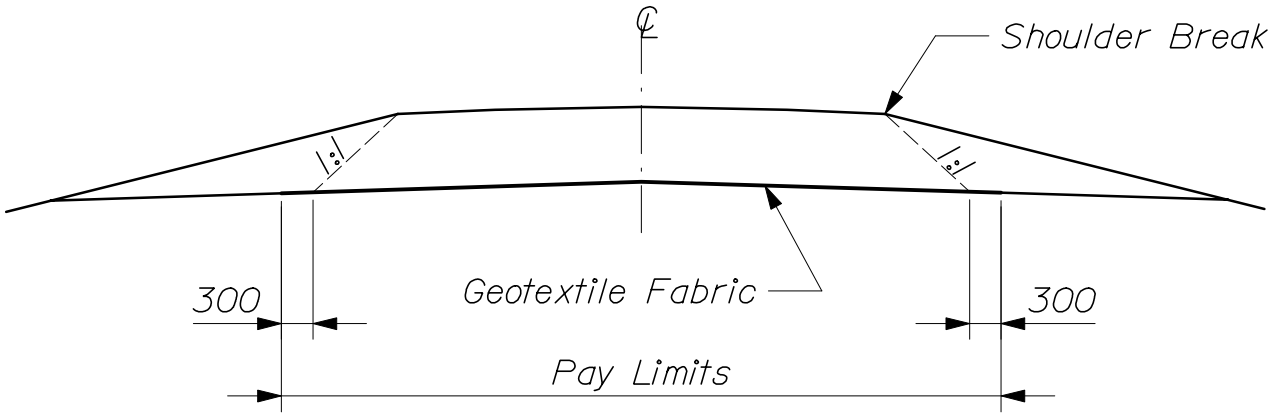

~ GEOTEXTILE AT SUBGRADE ~

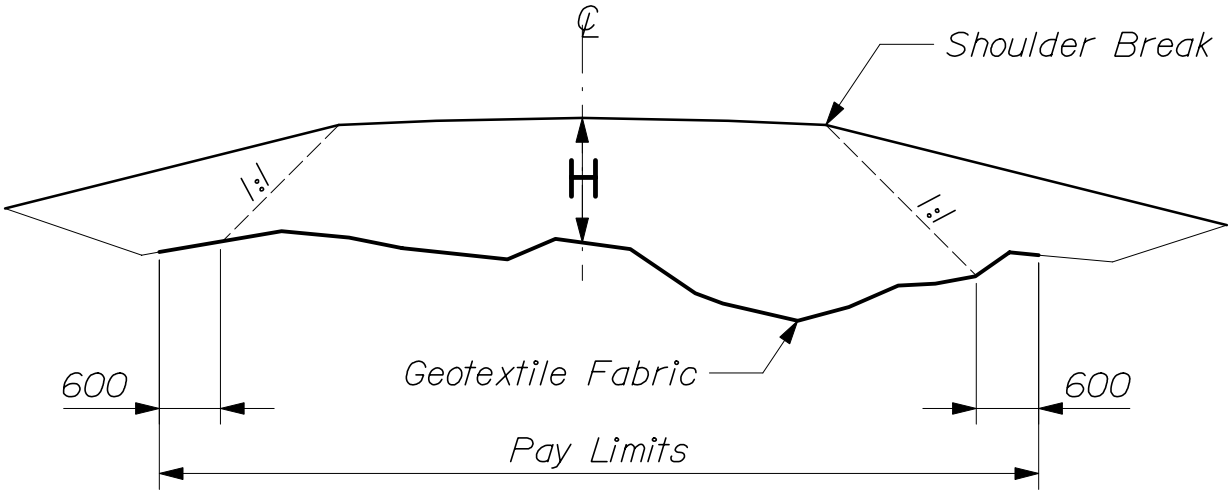

~ GEOTEXTILE ON OLD GROUND ~

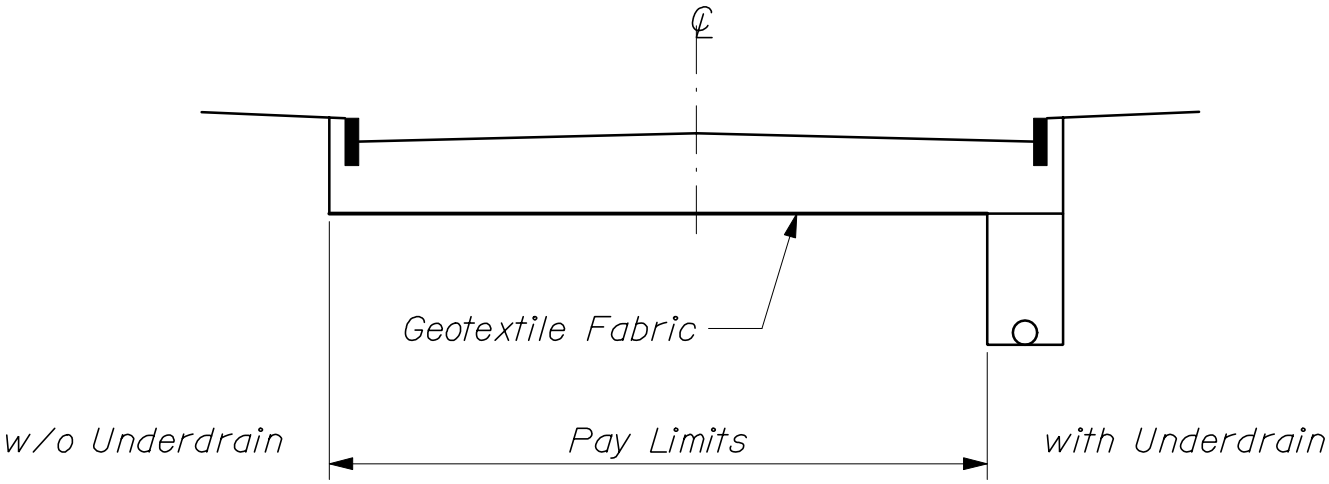

~ BOX SECTION ~

LATERAL LIMITS IN A ROADWAY

620(03)

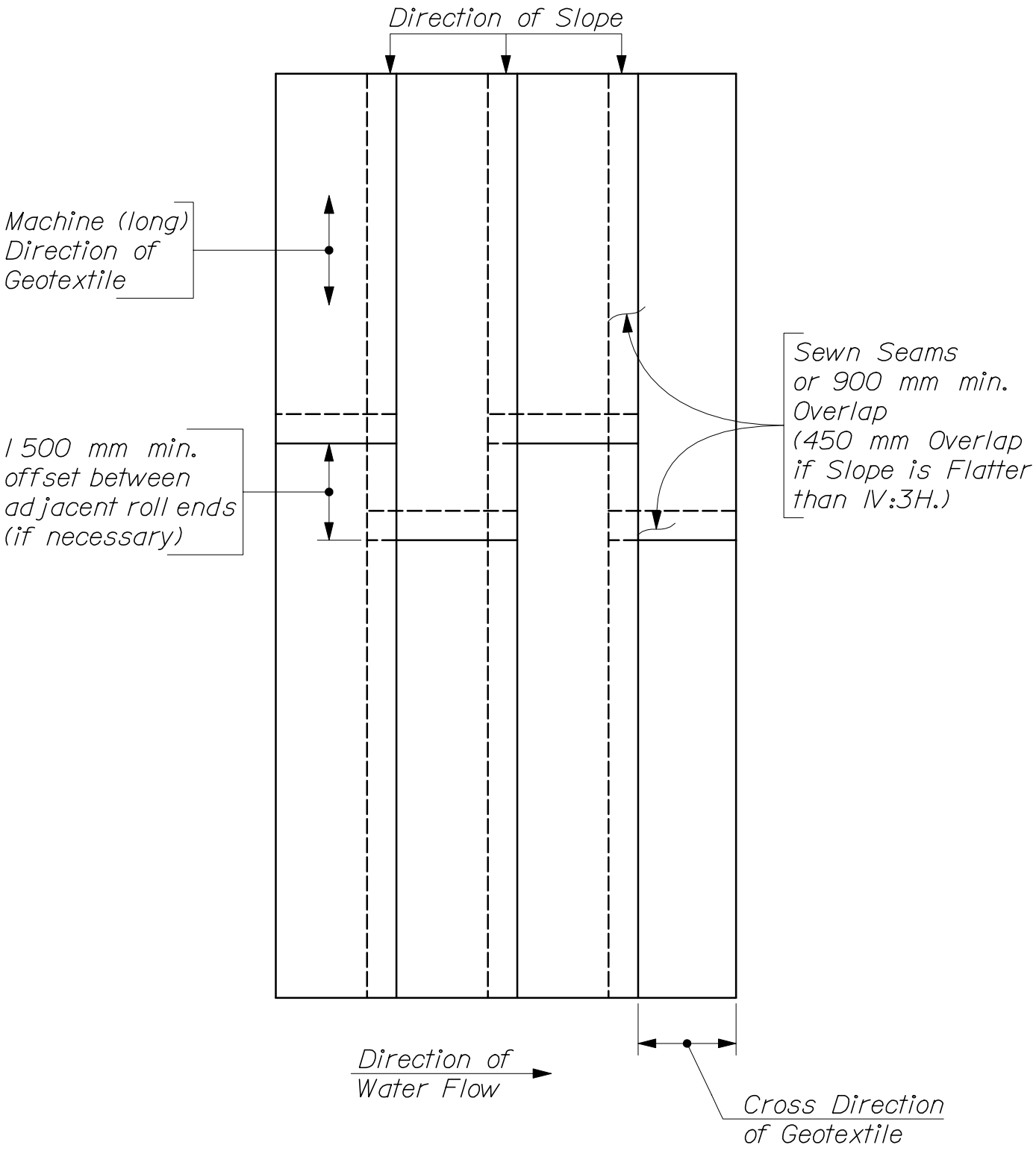

~ PLAN VIEW ~

GEOTEXTILE PLACEMENT FOR PROTECTION OF SLOPES ADJACENT TO STREAMS & TIDAL AREAS

620(04)

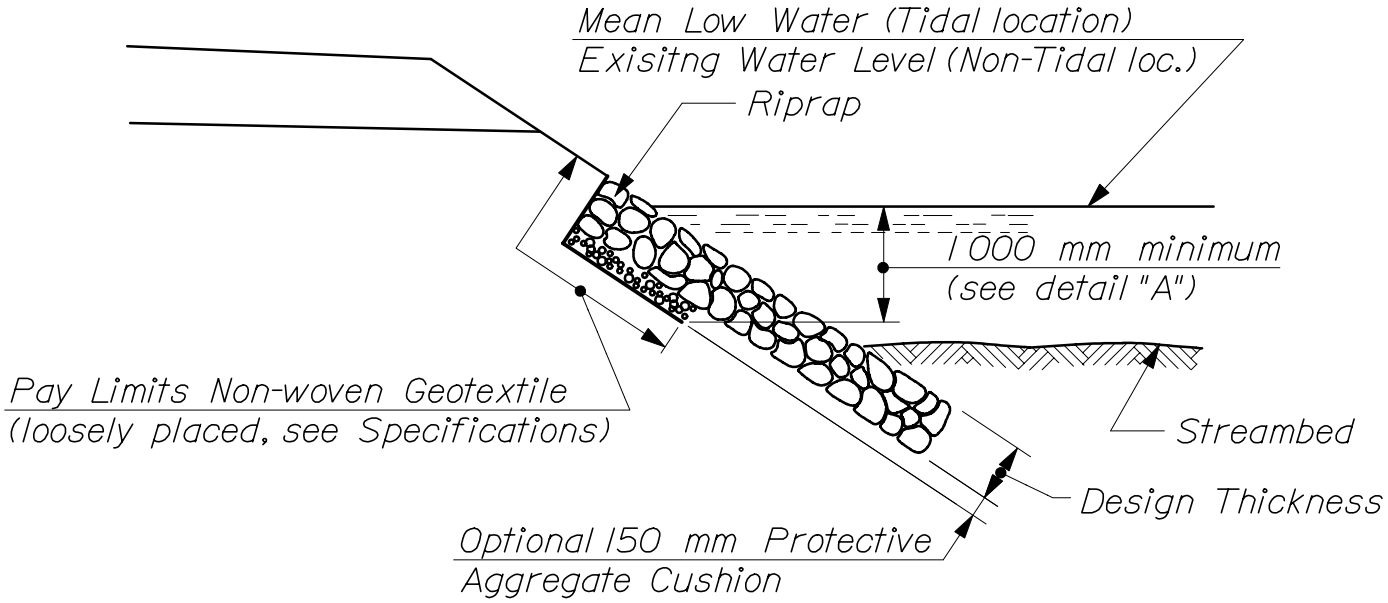

~ AT ROADWAY SLOPES ~

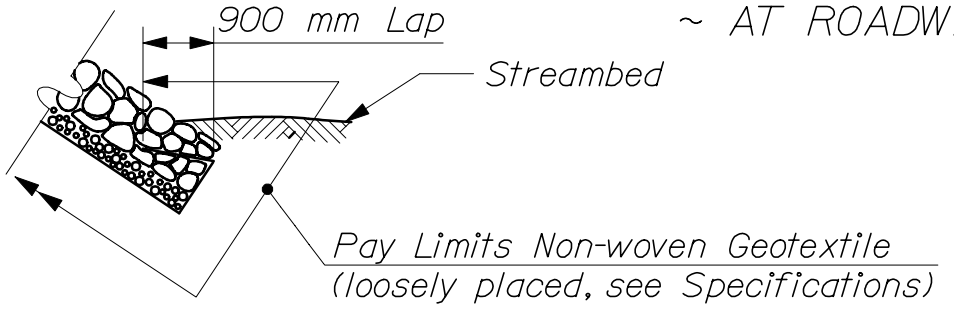

~ DETAIL "A" ~
(For use where water depth
is less than 1 000 mm.)

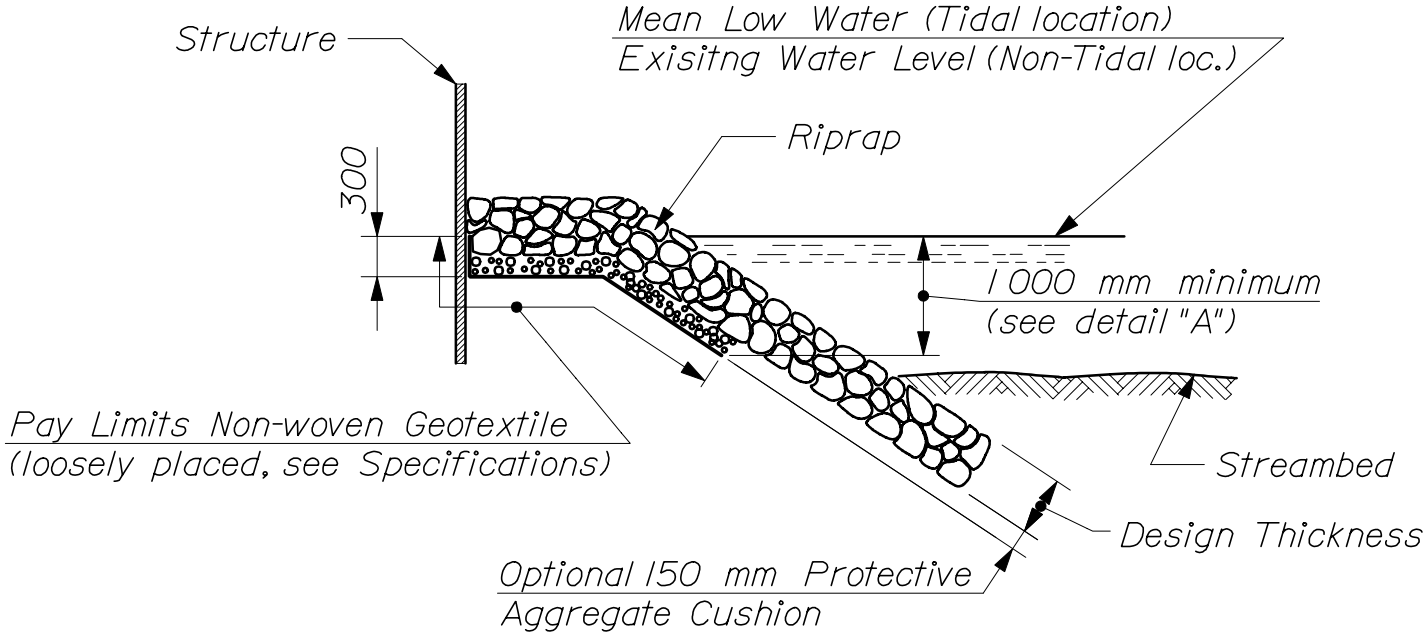

~ AT STRUCTURE ~

GEOTEXTILE PLACEMENT FOR PROTECTION OF SLOPES ADJACENT TO STREAMS & TIDAL AREAS

620(05)

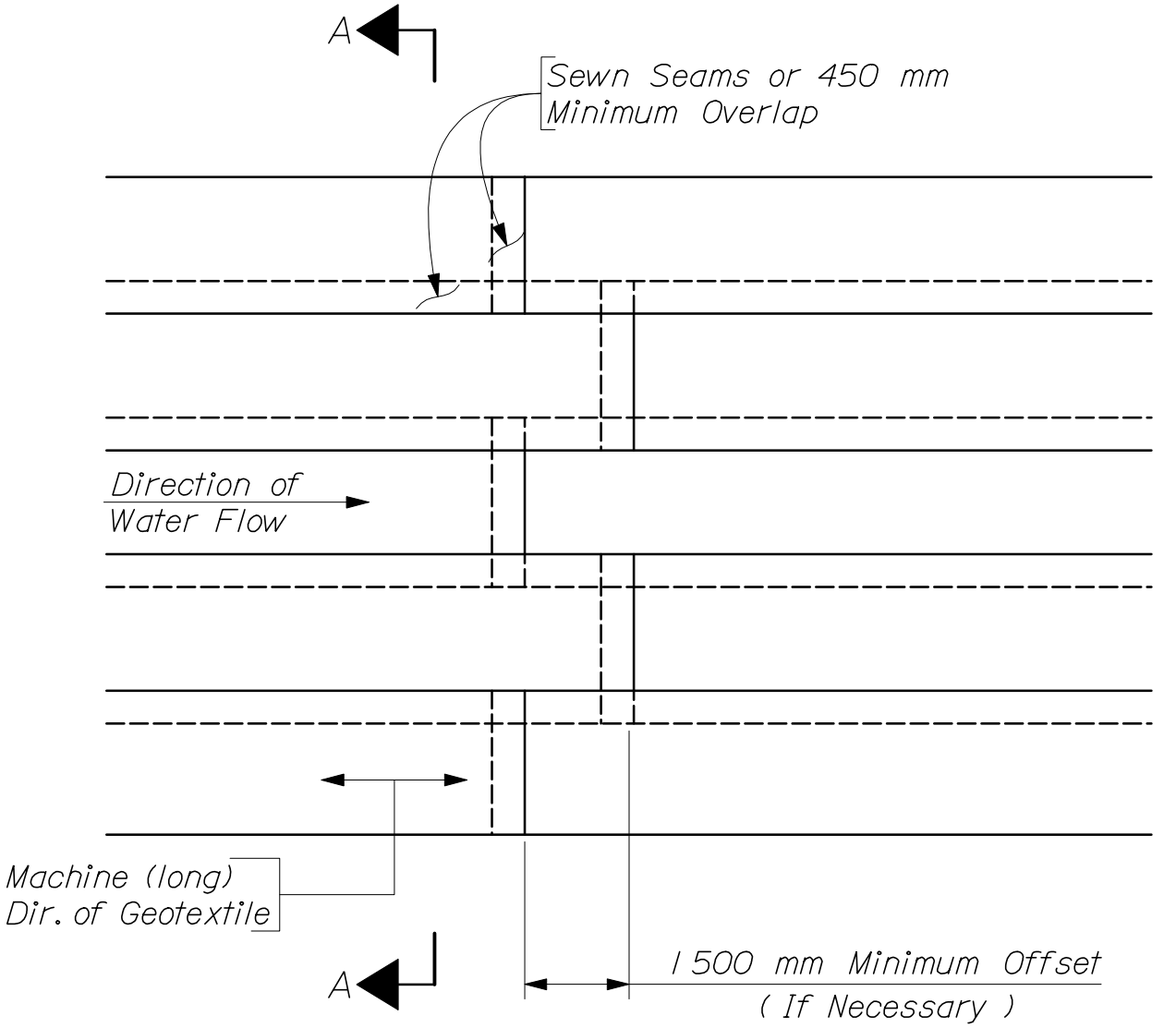

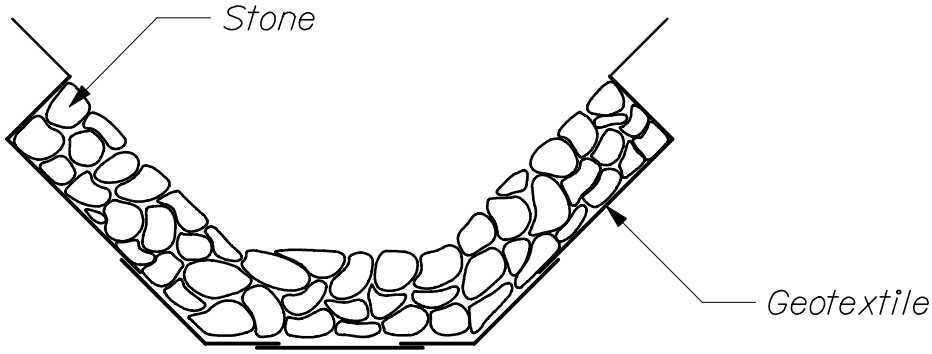

~ SECTION A - A ~

GEOTEXTILE PLACEMENT SCHEME FOR PROTECTION OF DITCHES, SHALLOW CHANNELS, ETC.

620(06)

SLOPE VERTICAL:HORIZONTAL	PIN SPACING ALONG OVERLAPS (CENTER TO CENTER)
1:3 TO 1:4	1 000 mm
1:4 OR FLATTER	1 200 mm

PIN SPACING FOR OVERLAPPED GEOTEXTILE ON SLOPES FLATTER THAN IV:3H (OPTIONAL)

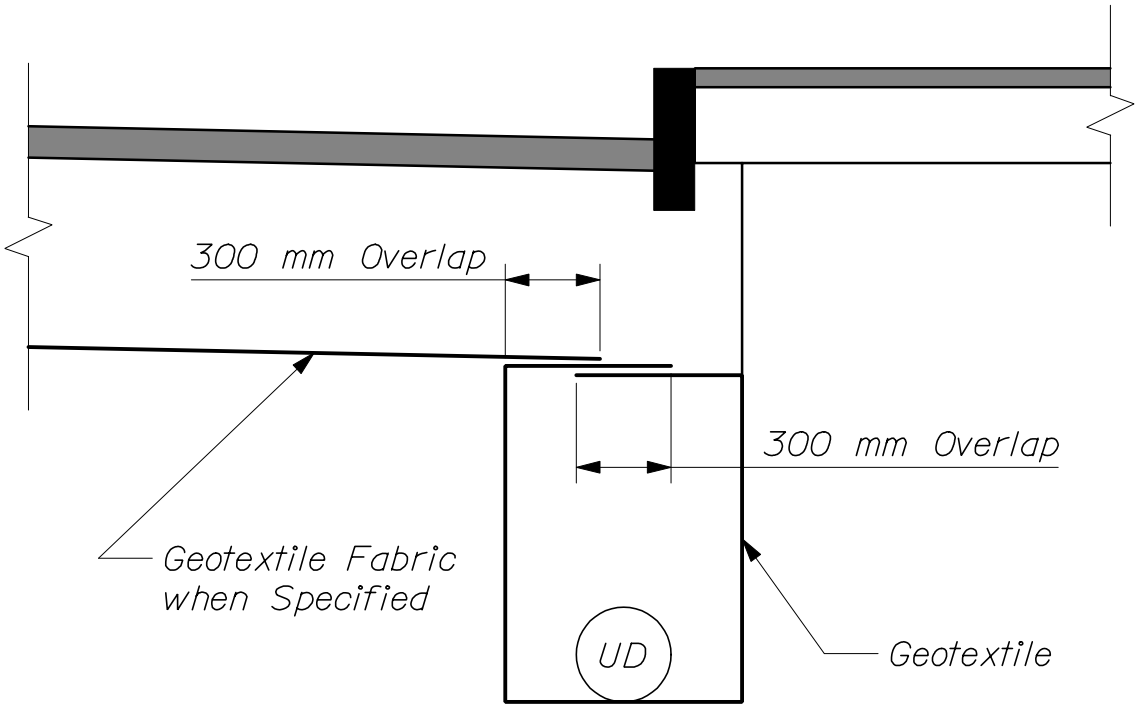

GEOTEXTILE LINED UNDERDRAIN TRENCH

CROSS SECTION
Not to scale

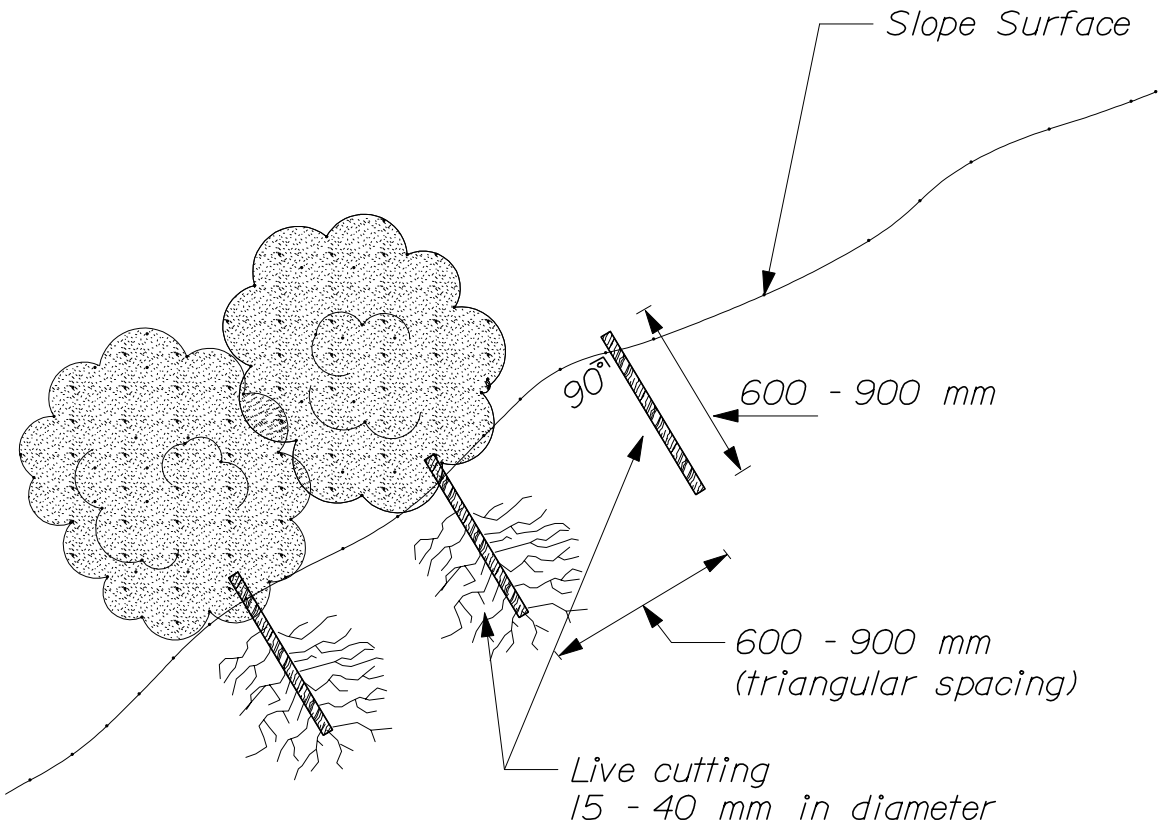

NOTE:
Rooted/leafed condition of the living plant material is not representative of the time of installation.

LIVE STAKING

621(01)

CONSTRUCTION GUIDELINES

Live material sizes - The cuttings are usually 15 to 40 mm in diameter and 600 to 900 mm long as shown in the detail above. For final size determination, refer to the available cutting source.

LIVE MATERIAL PREPARATION

1. The materials must have side branches cleanly removed and the bark intact.

2. The basal ends should be cut at an angle for easy insertion into the soil. The top should be cut square.

3. Materials should be installed the same day that they are prepared.

INSTALLATION

1. Tamp the live stake into the ground at right angles to the slope. The installation may be started at any point on the slope face.

2. The live stakes should be installed 600 to 900 mm apart using triangular spacing. The density of the installation will range from 2 to 4 stakes per square yard.

3. The buds should be oriented up.

4. Four-fifths of the length of the live stake should be installed into the ground and soil firmly packed around it after installation.

5. Do not split the stakes during installation. Stakes that split should be removed and replaced.

6. An iron bar can be used to make a pilot hole in firm soil. Drive the stake into the ground with a dead blow hammer (hammer head filled with shot or sand).

LIVE STAKING
CONSTRUCTION & INSTALLATION NOTES

CROSS SECTION
not to scale

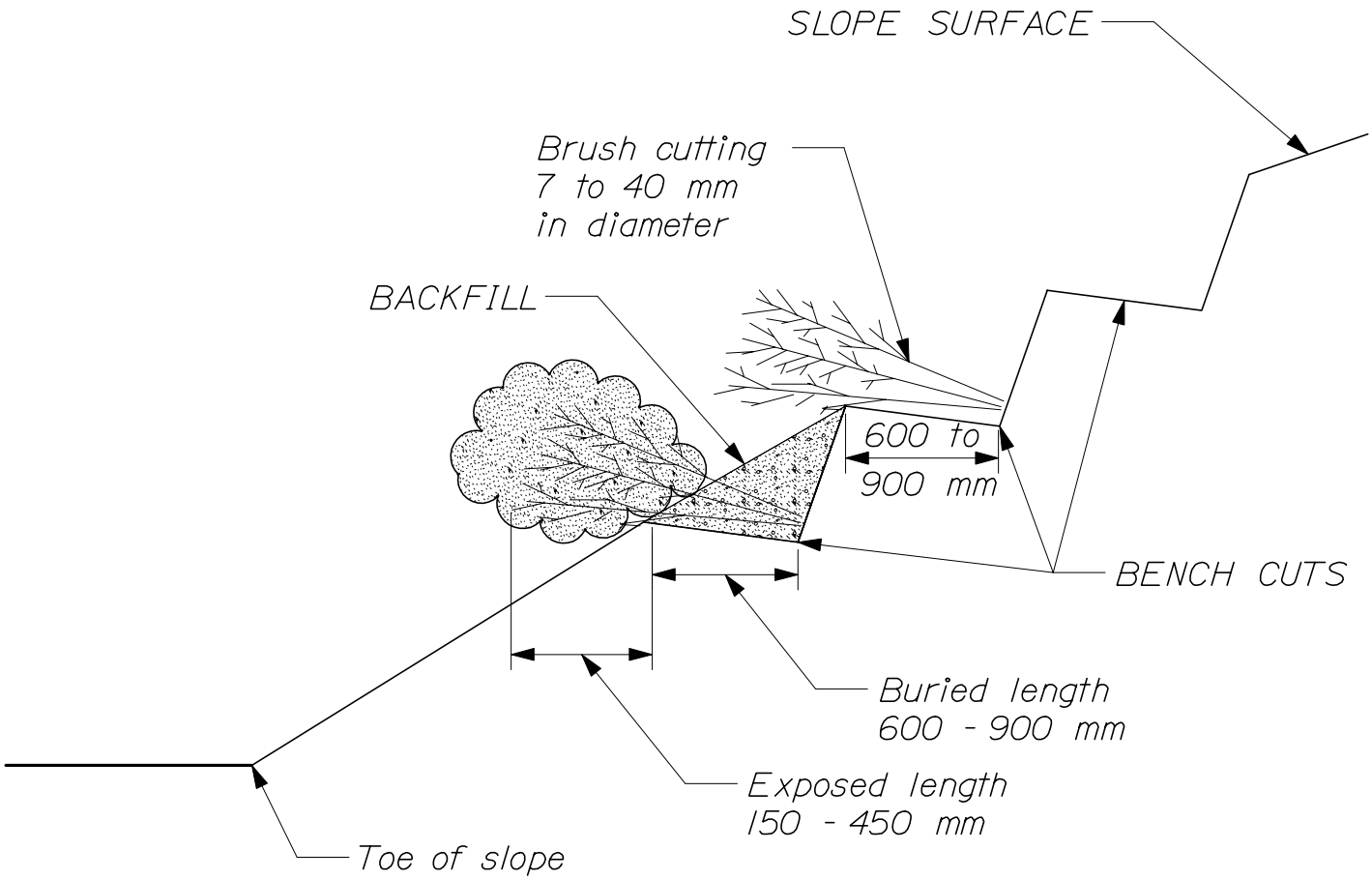

NOTE:
Rooted/leafed condition of living plant material is not representative of the time of installation.

BRUSH LAYERING

621(03)

CONSTRUCTION GUIDELINES

Live Material Sizes - Branch cuttings should be 7 to 40 mm in diameter and long enough to reach the back of the bench. Side branches should remain intact for installation.

INSTALLATION

1. Starting at the toe of the slope, benches should be excavated horizontally, on the contour, or angled slightly down the slope, if needed to aid drainage. The bench should be constructed 600 to 900 mm wide.

2. The surface of the bench should be sloped so that the outside edge is higher than the inside.

3. Branch growing tips shoud be aligned toward the outside of the bench.

4. Backfill is placed on top of the branches, compacted, and watered-in to eliminate air spaces.

5. The brush tips should extend slightly beyond the fill to filter sediment.

6. Long straw or similar mulching material with seeding should be placed between rows on 1:3 or flatter slopes. Side slopes steeper than 1:3 should have temporary erosion control blanket or Erosion Control Mix placed.

7. The brushlayer rows should vary from 900 to 1 500 mm apart depending upon the slope angle and stability.

BRUSHLAYER INSTALLATION GUIDELINES

SLOPE DISTANCE BETWEEN BENCHES		
Slope	Wet slopes (mm)	Dry slopes (mm)
2:1 to 2.5:1	900	900
2.5:1 to 3:1	900	1200
3.5:1 to 4:1	1200	1500

BRUSH LAYERING
CONSTRUCTION & INSTALLATION NOTES

CROSS SECTION
not to scale

NOTE:
Rooted/leafed condition of the living plant material is not representative of the time of installation.

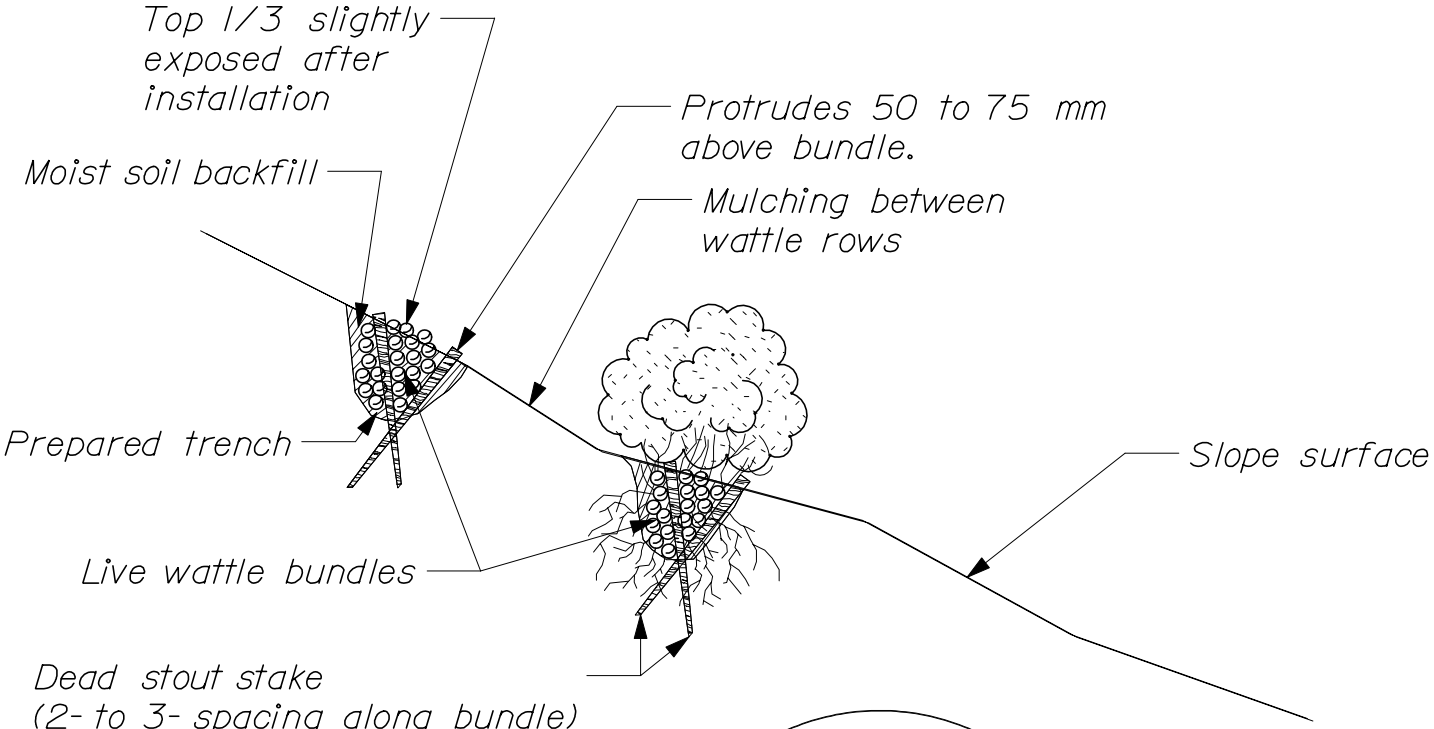

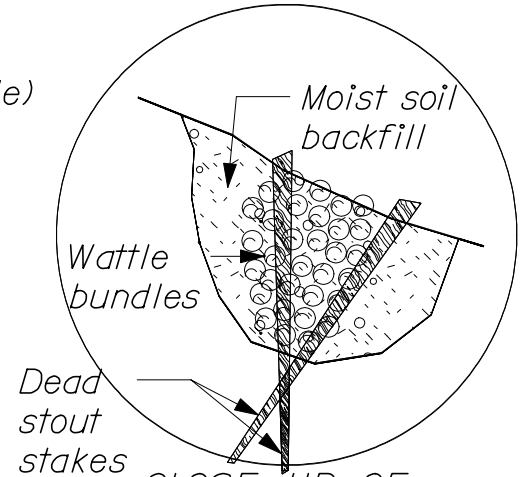

CLOSE UP OF BUNDLE PLACEMENT

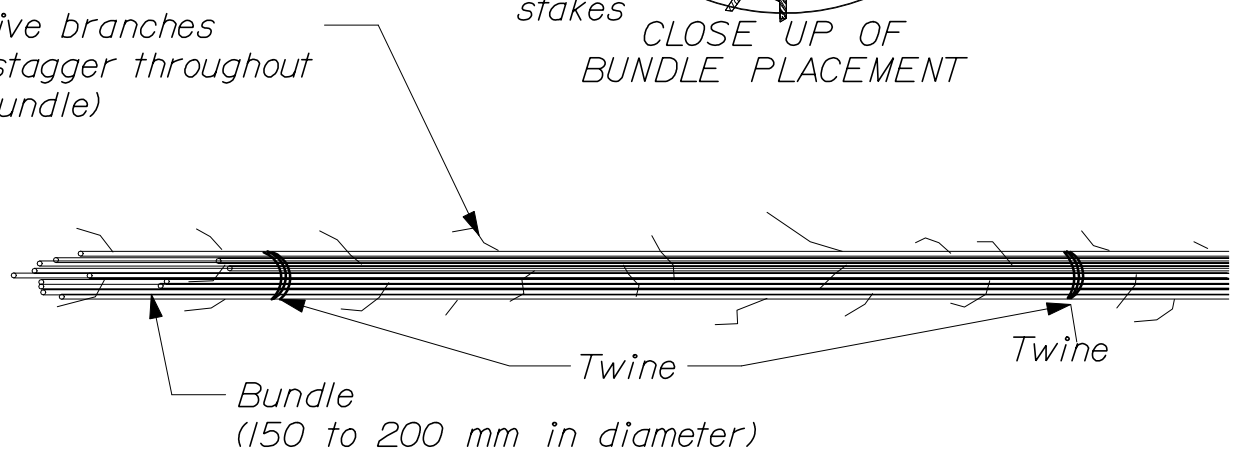

LIVE WATTLES

621(05)

CONSTRUCTION GUIDELINES

Live materials - Cuttings must be from species, such as young willow or shrub dogwoods, that root easily and have long, straight branches 7 to 25 mm diameter. (See Bioengineering Plant Material list.)

LIVE MATERIAL SIZES AND PREPARATION

1. Cuttings tied together to form live wattle bundles vary on length from 1 500 to 9 000 mm or longer, depending on site conditions and limitations in handling.

2. The completed bundles should be 150 to 200 mm in diameter with all the growing tips oriented in the same direction. Stagger the cuttings in bundles so that tops are evenly distributed throughout the length of the uniformly sized live wattle. (12 to 15 cuttings per bundle)

3. Inert materials - String used for bundling should be untreated twine.

4. Dead stout stakes used to secure the live wattles should be 750 mm long, untreated 50 x 100 mm lumber. Each length should be cut again diagonally across the 100 mm face and make two stakes from each length. Only new, sound, unused lumber should be used, and any stakes that split upon installation should be discarded.

INSTALLATION

1. Prepare the live wattle bundles immediately before installation.

2. Beginning at the base of the slope, dig a trench on the contour just large enough to contain the live wattle. The trench will vary in width from 300 to 450 mm depending on the angle of the slope to be treated. The depth will be 150 to 200 mm depending the size of individual bundles.

3 Place the live wattle into the trench. Minimum 300 mm overlap.

4. Drive the dead stout stakes directly through the live wattle every 600-900 mm along its length.

5. Extra stakes should be used at connection or bundle overlaps. Leave the top of the stakes flush with the installed bundle. Min of 2 stakes per bundle.

6. Place moist soil along the sides of the live wattles. The top of the wattle should be slightly visible when the installation is completed.

7. Next, at intervals on contour or at an angle up the face of the bank, repeat the above steps to the top of slope. When possible, place one or two rows over the top of slope.

8. Long straw or similar mulching material should be placed between rows on 2.5:1 or flatter slopes, while slopes steeper than 1:2.5 should have temporary erosion control blanket placed in addition to the mulch.

LIVE WATTLES
CONSTRUCTION & INSTALLATION NOTES

CROSS SECTION
not to scale

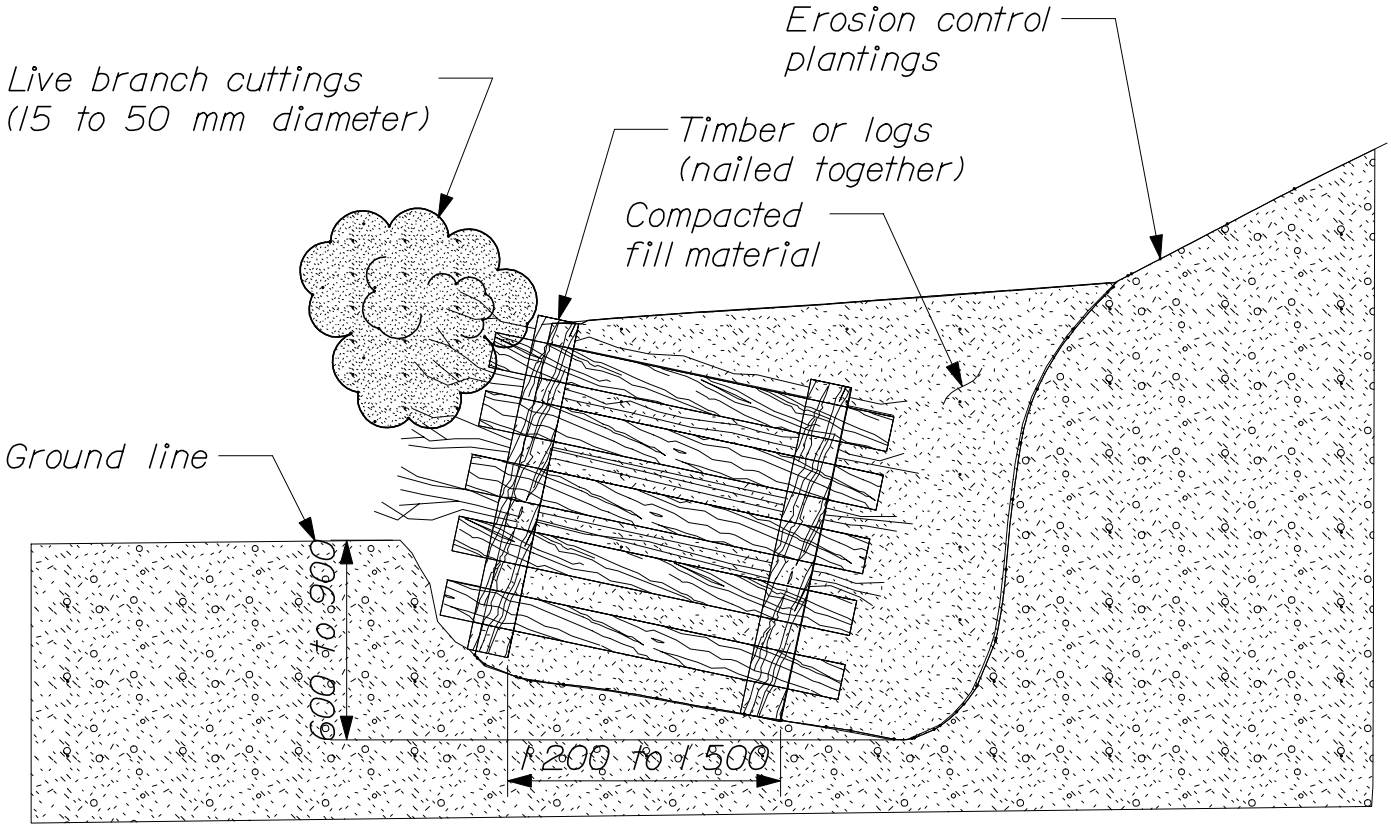

NOTE:
Rooted/leafed condition of the living plant material is not representative of the time of installation.

LIVE CRIBWALL

621(07)

CONSTRUCTION GUIDELINES

1. Live material sizes - Live branch cuttings should be 15 to 50 mm in diameter and long enough to reach the back of the wooden crib structure.

2. Inert materials - Logs or timbers should range from 100 to 150 mm in diameter or dimension. The lengths will vary with the size of the crib structure.

3. Large nails or rebar are required to secure the logs or timbers together.

INSTALLATION

1. Starting at the lowest point of the slope, excavate loose material 600-900 mm below the ground elevation until a stable foundation is reached.

2. Excavate the back of the stable foundation (closest to the slope) slightly deeper than the front to add stability to the structure.

3. Place the first course of logs or timbers at the front and back of the excavated foundation, parallel to the slope contour.

4. Place the next course of logs or timbers at right angles (perpendicular to the slope) on top of the previous course to overhang the front and back of the previous course by 75 to 150 mm.

5. Each course of the live cribwall is placed in the same manner and secured to the preceding course. (See Cribwall Special Provisions installation guidelines)

6. When the cribwall structure reaches the existing ground elevation, place live branch cuttings on the backfill perpendicular to the slope then cover the cuttings with backfill and compact.

7. Live branch cuttings should be placed at each course to the top of the cribwall structure with growing tips oriented toward the slope face. Follow each layer of branches with a layer of compacted fill to ensure soil contact with the live branch cuttings. The basal ends of the live branch cutting should reach the soil at the back of the cribwall with growing tips protruding slightly beyond the front of the cribwall.

LIVE CRIBWALL
CONSTRUCTION & INSTALLATION NOTES

621(08)

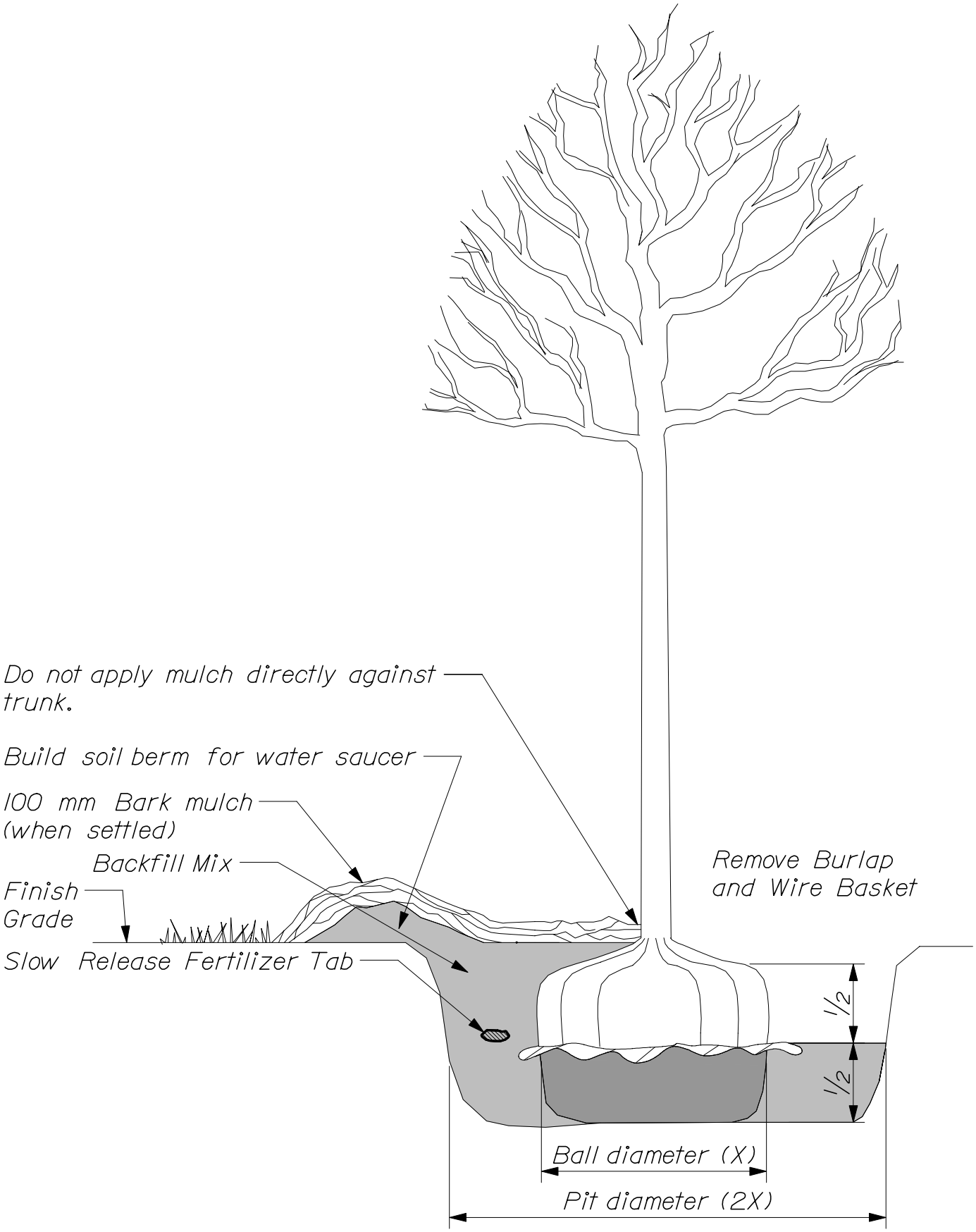

TREE PLANTING
PLANTING DETAILS

621(09)

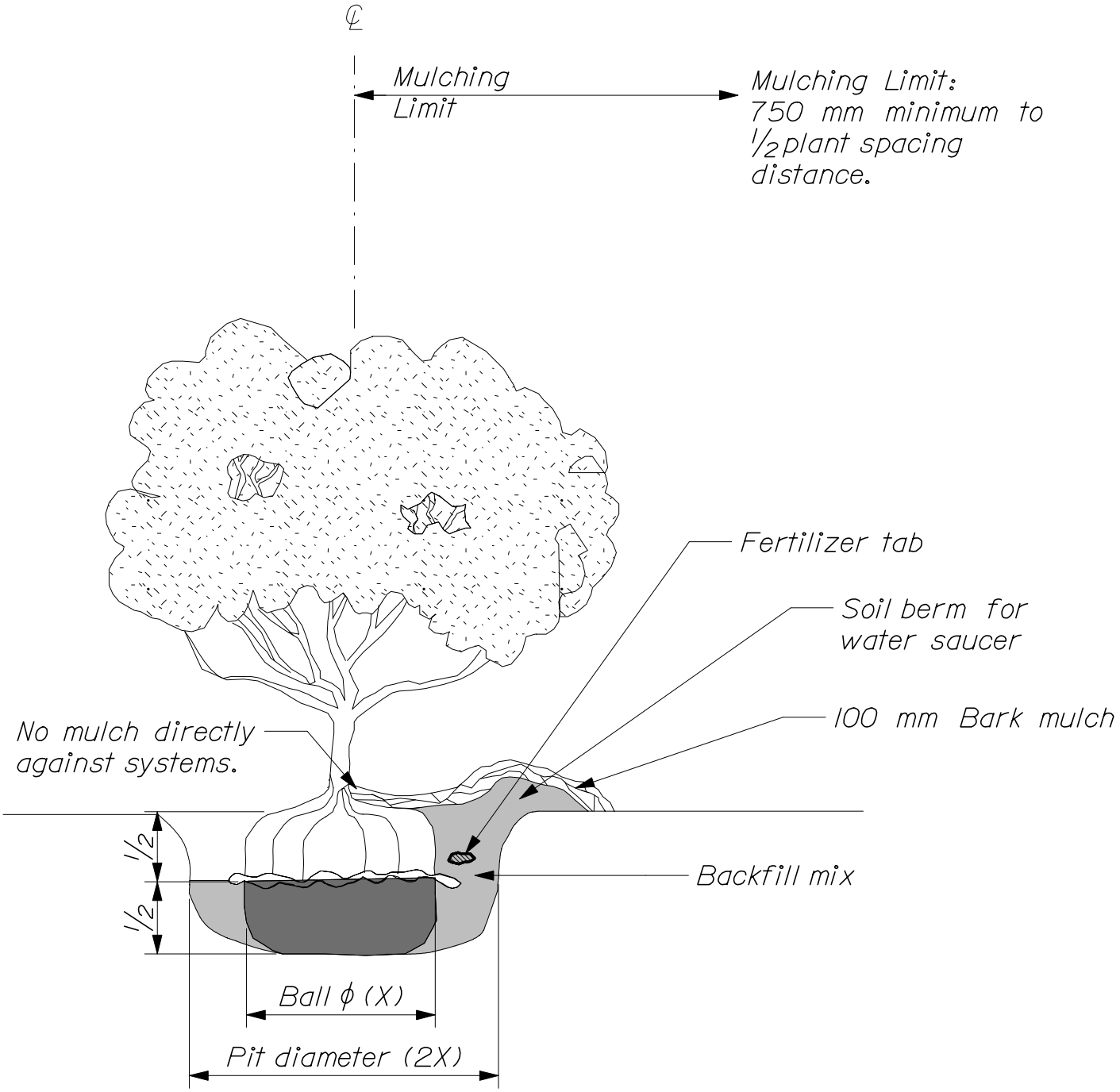

SHRUB PLANTING
PLANTING DETAILS

621(10)

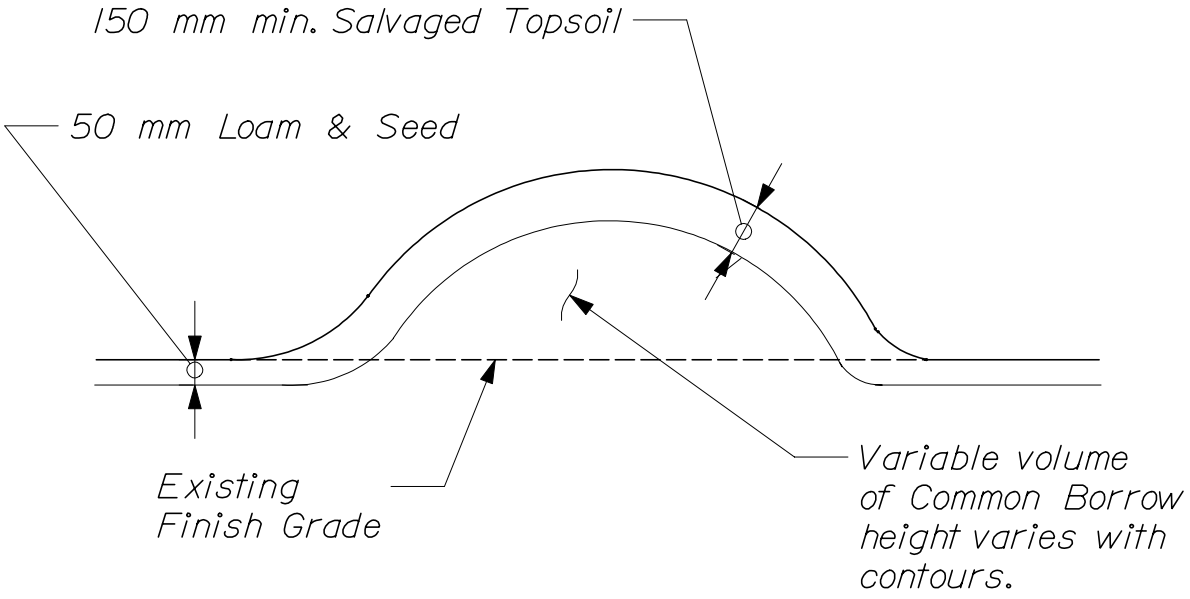

PLANTING NOTES

Backfill in 100 mm lifts and tamp to half the depth of the ball. Loosen and spread out burlap- cut out excessive bulk. Remove top half of wire basket.

HERBICIDE NOTE

Plant beds that have been treated with Round Up herbicide for weed control shall not be disturbed for a min. of 7 days.

BACKFILL MIX

3 parts Loam to 1 part approved compost.

PLANTING DETAILS
LANDSCAPE MOUND DETAIL

621(11)

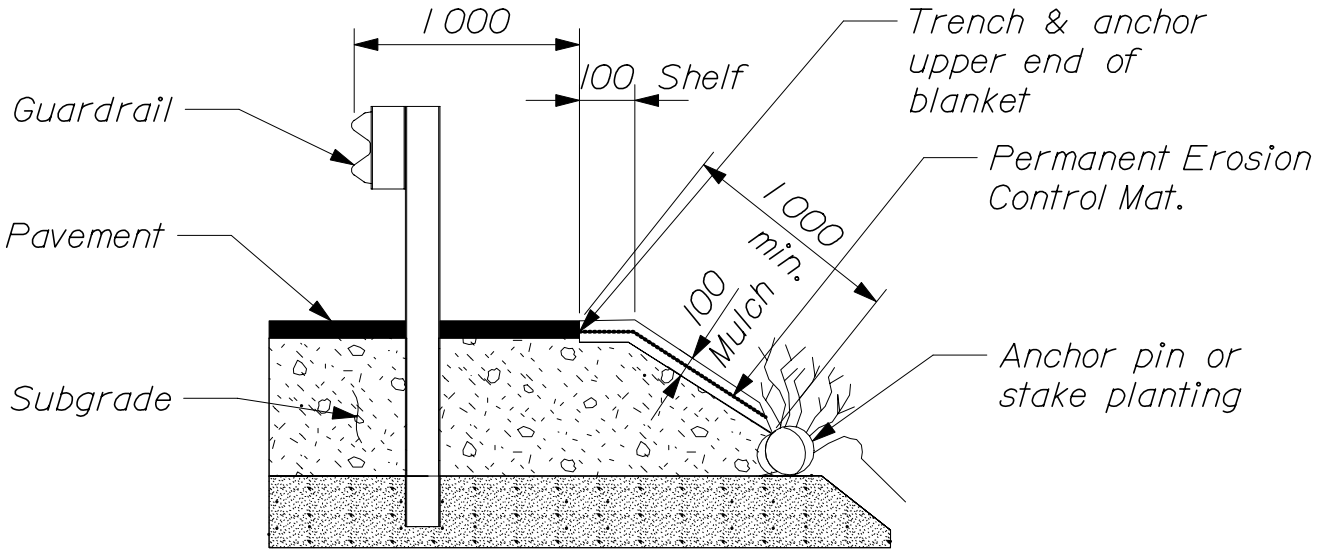

NOTES:

1. Level existing surface to recieve mat. Cut 100 mm wide shelf into top edge of installation area.

2. Lay matting pealed side down. Stretch mat approximately 5% before staking.

3. Stake top edge, then throughout the remainder of the mat at 1 m to 1.5 m intervals.

4. Backfill shelf with original material and tamp firmly.

5. Cover mat with mulch as in plant bed. Mulch shall be level with pavement surfaces.

EROSION CONTROL MAT PLANTING DETAILS

621(12)

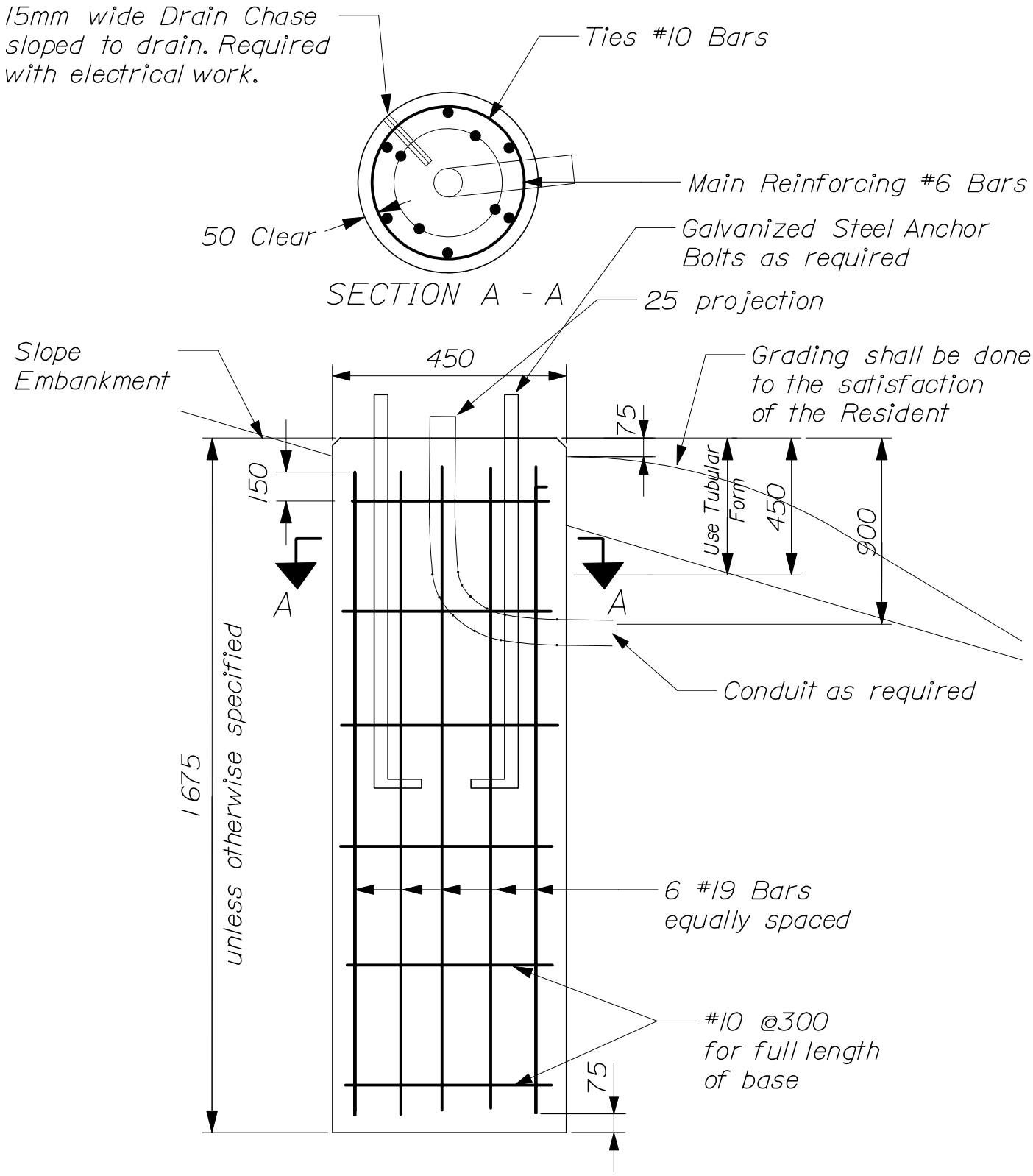

450mm FOUNDATION
ITEM NO. 626.31

FOUNDATIONS FOR TRAFFIC SIGNALS, HIGHWAY SIGNING AND LIGHTING

626(01)

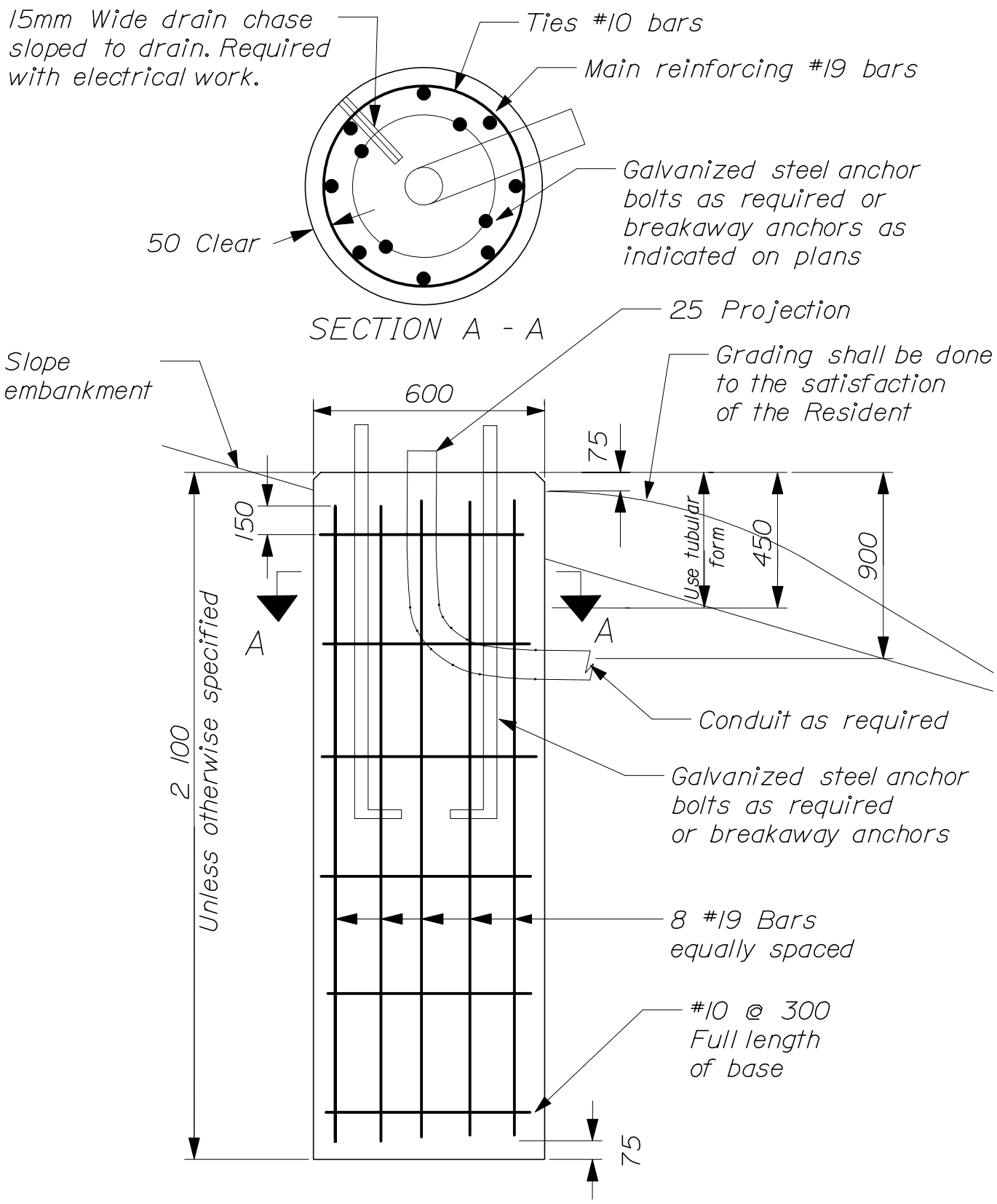

FOUNDATIONS FOR TRAFFIC SIGNALS, HIGHWAY SIGNING AND LIGHTING

626(02)

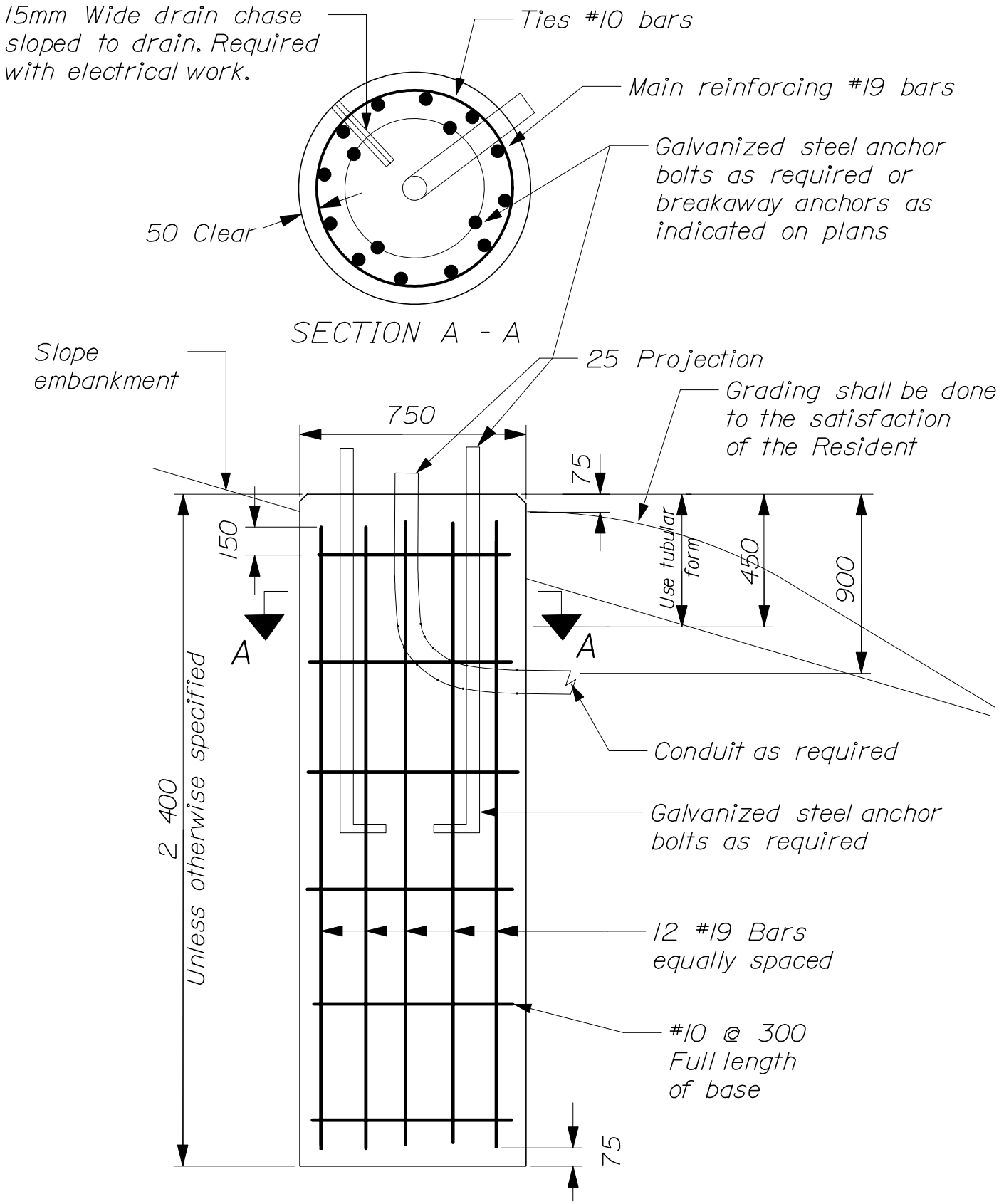

FOUNDATIONS FOR TRAFFIC SIGNALS, HIGHWAY SIGNING AND LIGHTING

626(03)

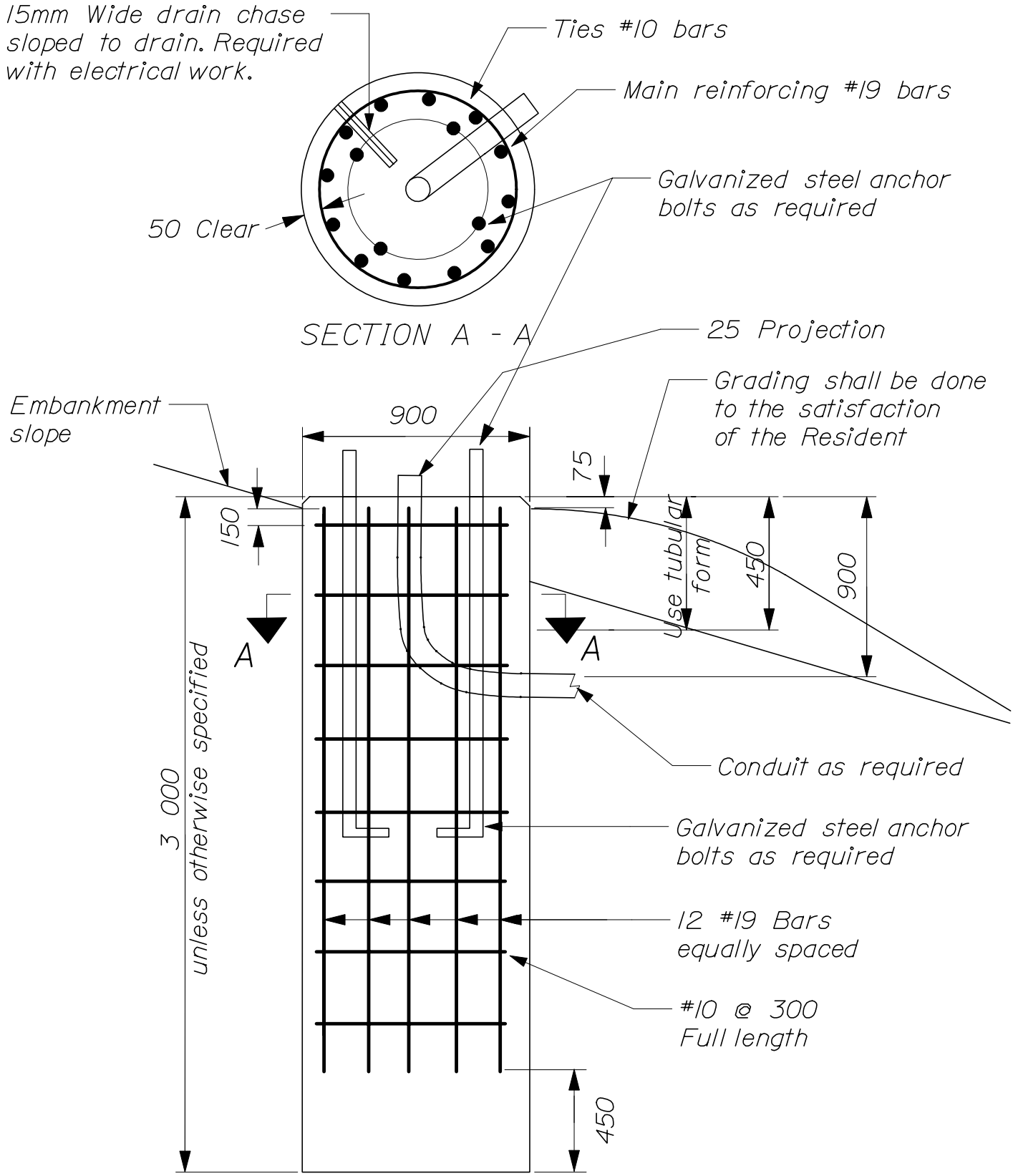

900mm FOUNDATION
ITEM NO. 626.37

FOUNDATIONS FOR TRAFFIC SIGNALS, HIGHWAY SIGNING AND LIGHTING

626(04)

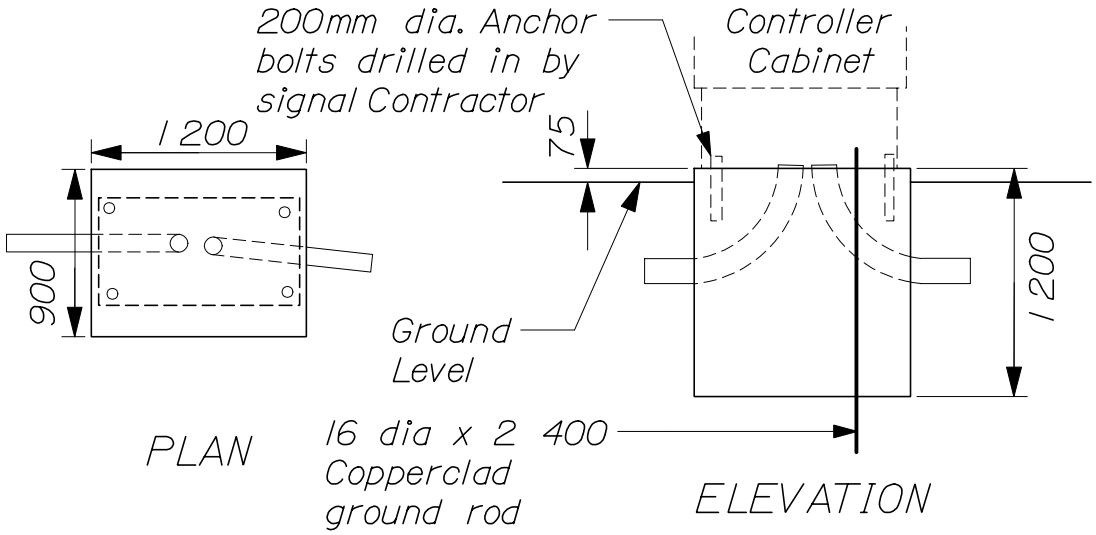

GROUND MOUNTED CONTROLLER CABINET FOUNDATION

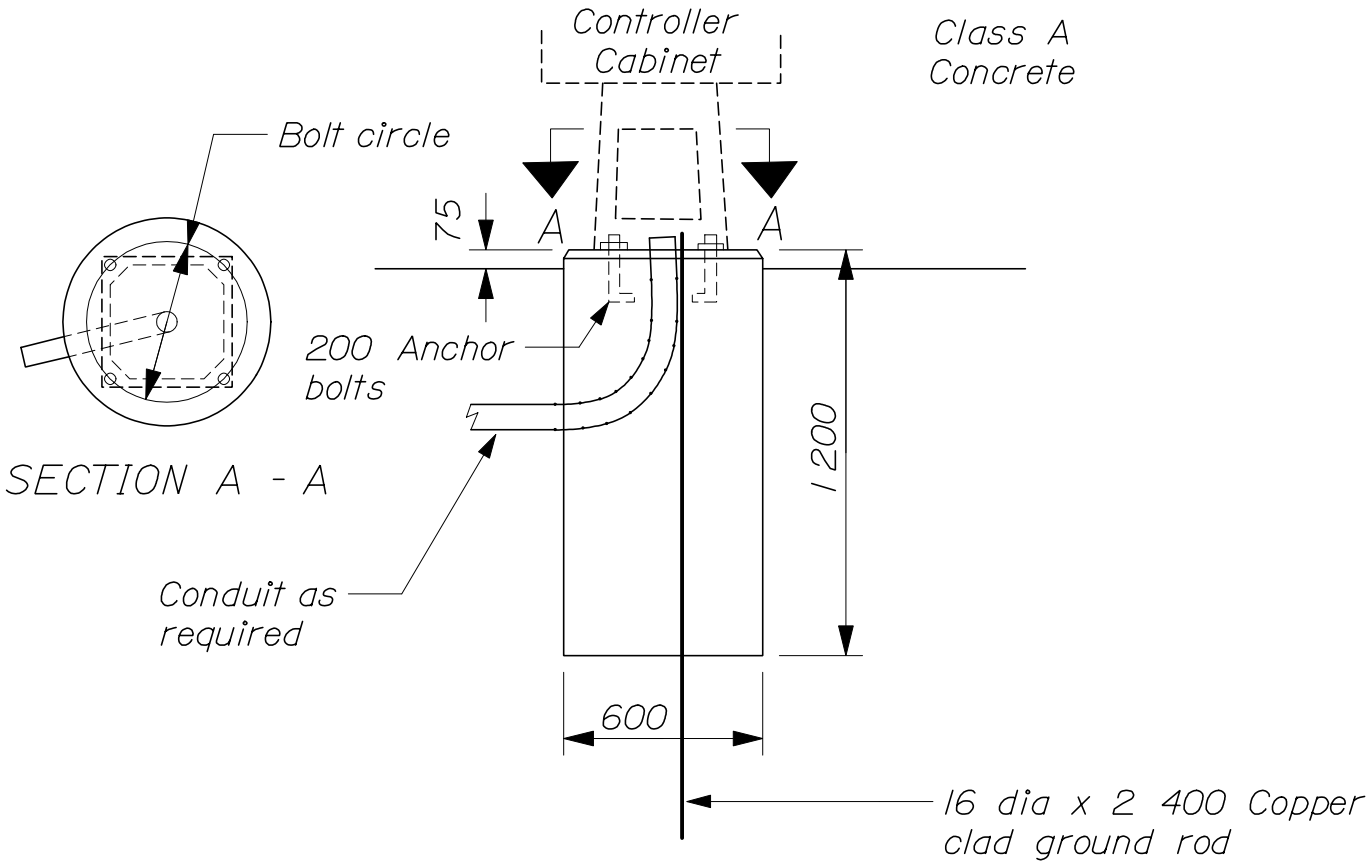

CONTROLLER CABINET FOUNDATION
ITEM NO. 626.35

FOUNDATIONS FOR TRAFFIC SIGNALS, HIGHWAY SIGNING AND LIGHTING

626(05)

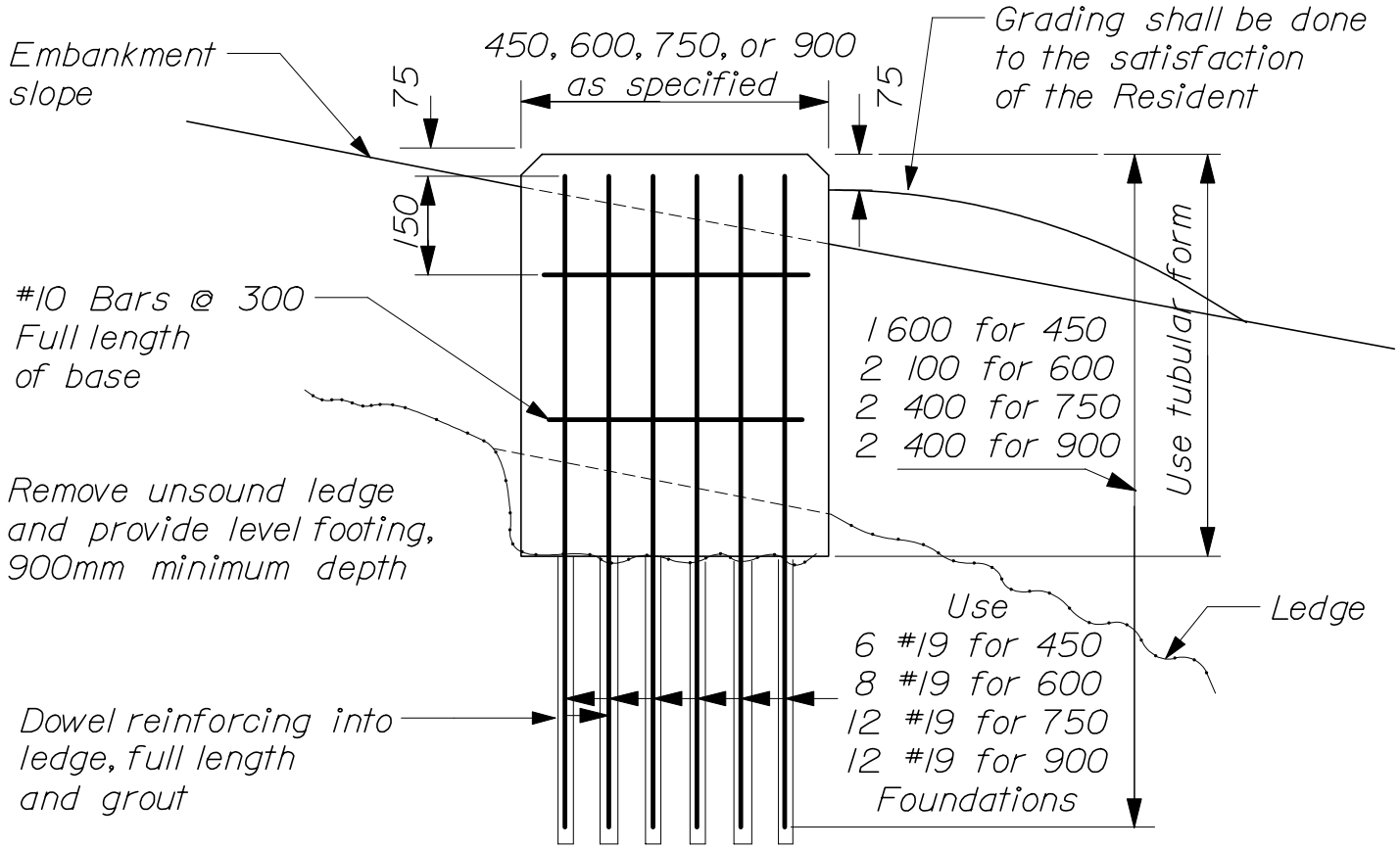

450, 600, 750, 900MM FOUNDATIONS
WHERE SOLID ROCK IS ENCOUNTERED AT LESS THAN
THE REQUIRED DISTANCE BELOW GROUND LEVEL

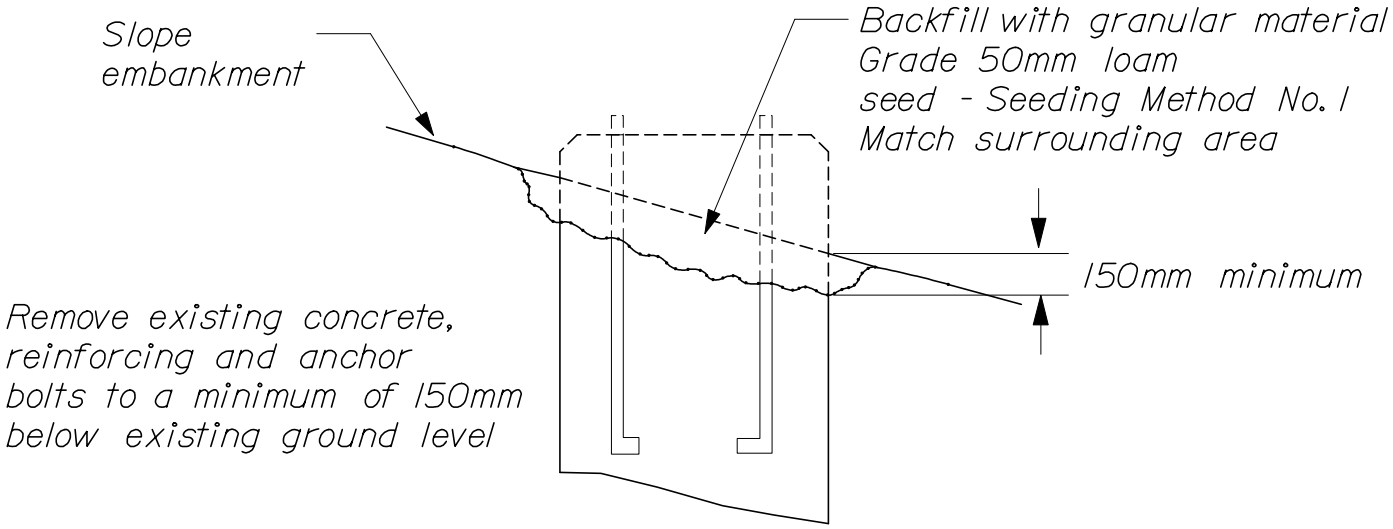

REMOVAL OF CONCRETE FOUNDATIONS
ITEM NO. 626.36

FOUNDATIONS FOR TRAFFIC SIGNALS, HIGHWAY SIGNING AND LIGHTING

626(06)

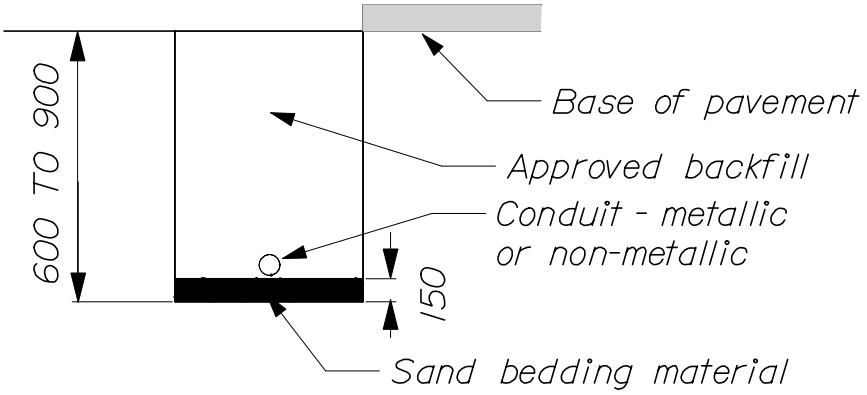

CONDUIT TRENCH

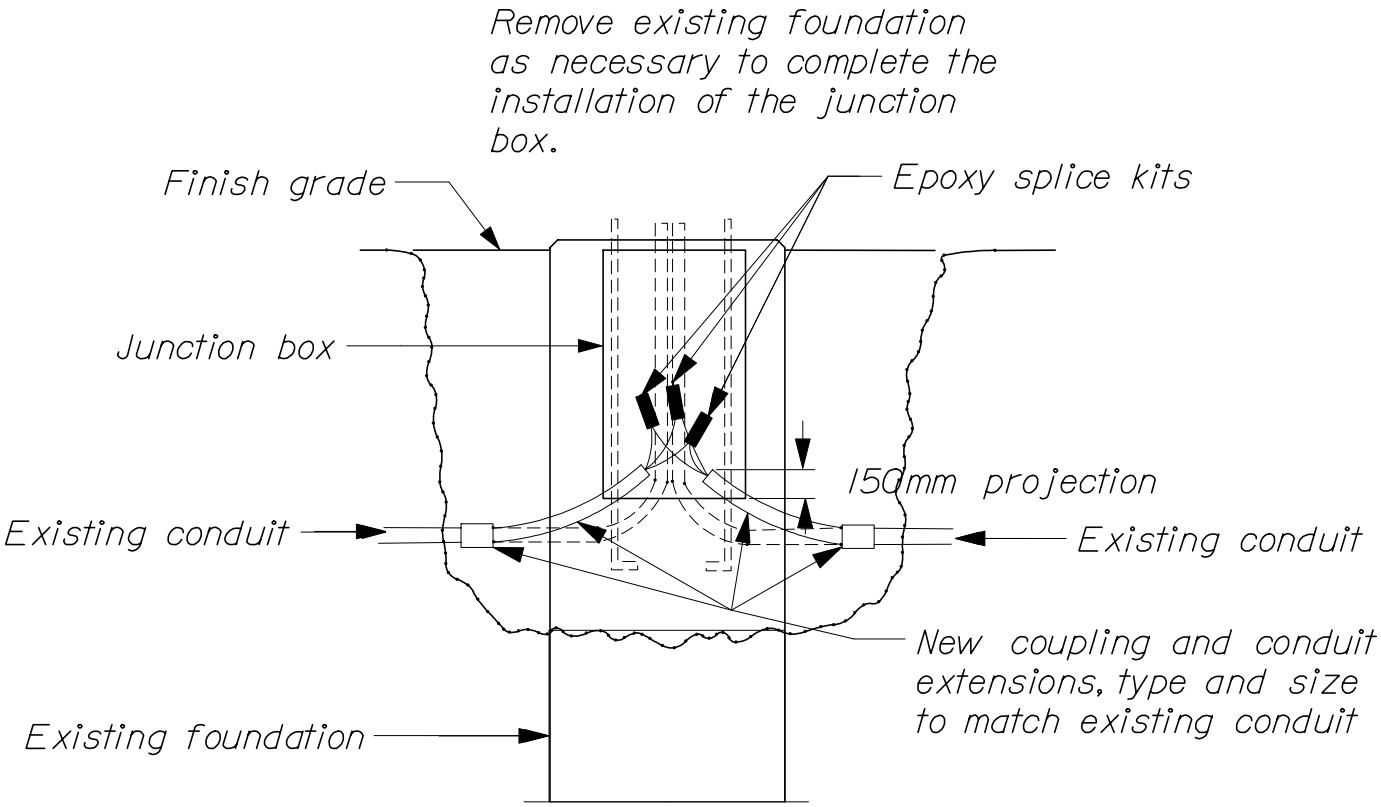

MODIFICATION OF CONCRETE FOUNDATION
ITEM NO. 626.36

FOUNDATIONS FOR TRAFFIC SIGNALS, HIGHWAY SIGNING AND LIGHTING

626(07)

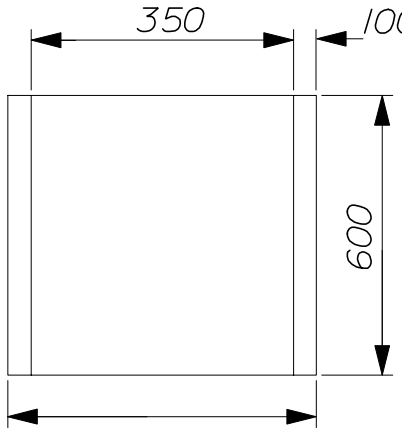

ELEVATION

Cast iron frame and cover

Grout frame in place on top of box

Note: For use in sidewalk areas

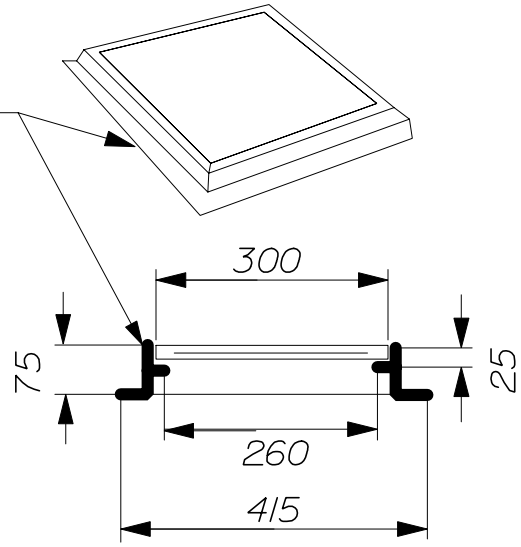

JUNCTION BOX COVER AND FRAME

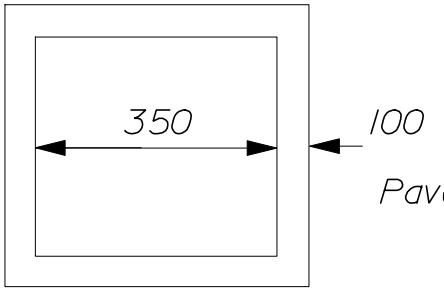

TOP

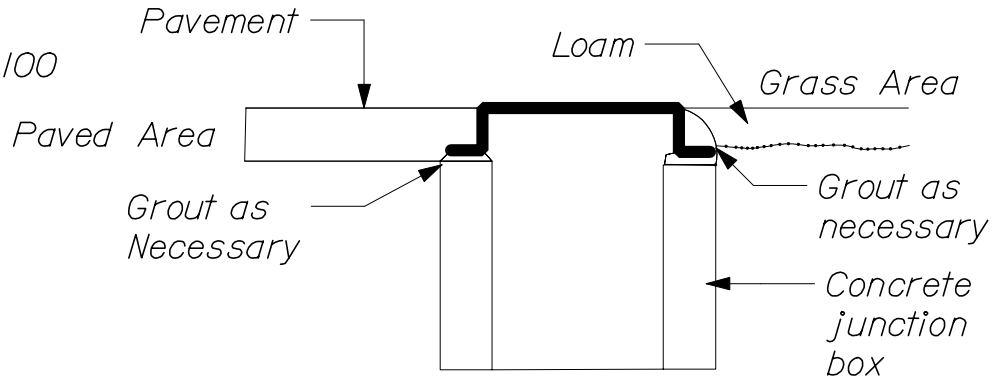

Install junction box on grade.
Grout as necessary as shown.

PRECAST CONCRETE JUNCTION BOX
ITEM NO. 626.111

ELECTRICAL JUNCTION BOX FOR TRAFFIC SIGNALS, AND LIGHTING

626(08)

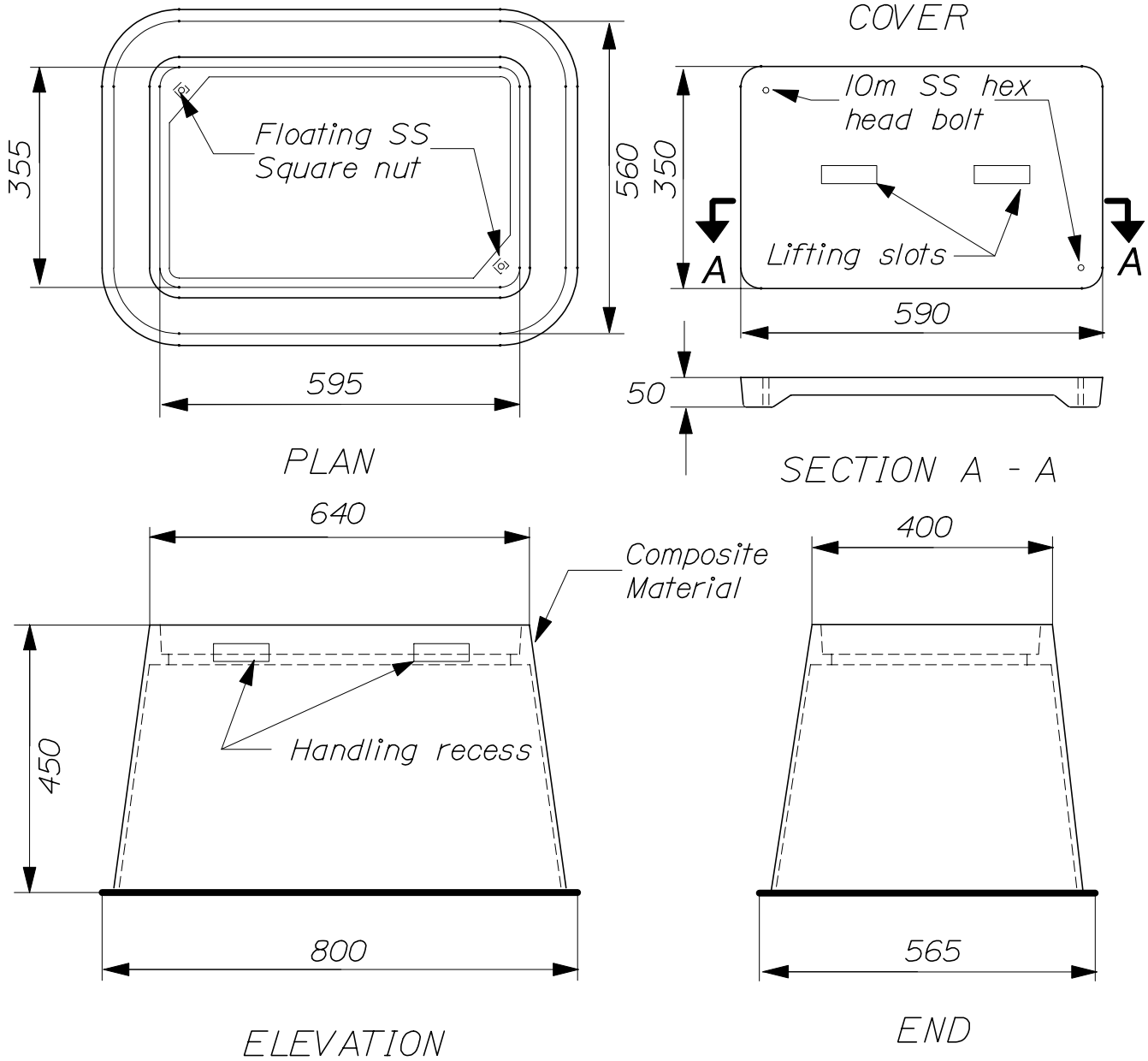

PRECAST JUNCTION BOX
ITEM NO. 626.11

Note
Junction box shall be CDR Systems Corp, A12-1324-18 or approved equal.

ELECTRICAL JUNCTION BOX FOR TRAFFIC SIGNALS, AND LIGHTING

626(09)

GENERAL NOTES

All pavement markings shall be in conformance with the "Manual on Uniform Traffic Control Devices for Streets and Highways", U.S. DOT, FHWA, 1988.

SYMBOLS AND ARROWS

Stroke width and line width variance shall be no more than ± 6 mm from dimensions shown.

Square meter dimensions shown are pay dimensions, paid by Item No. 627.65.

Grid is marked in 100 mm intervals except as noted. Symbols and letters shall be proportioned according to grid as shown.

Spacing between characters shall be one unit, but visual spacing may be used.

Spacing between symbol and stop line shall be a minimum of 6 m. Spacing between symbol and symbol shall be a minimum of 16 m or as directed by the Resident.

Pavement marking lines on interstates shall be 150 mm in width.

150 mm crosswalk lines shall be paid for by Item No. 627.65.

100 mm lines for parking spaces shall be paid for by Item No. 627.65.

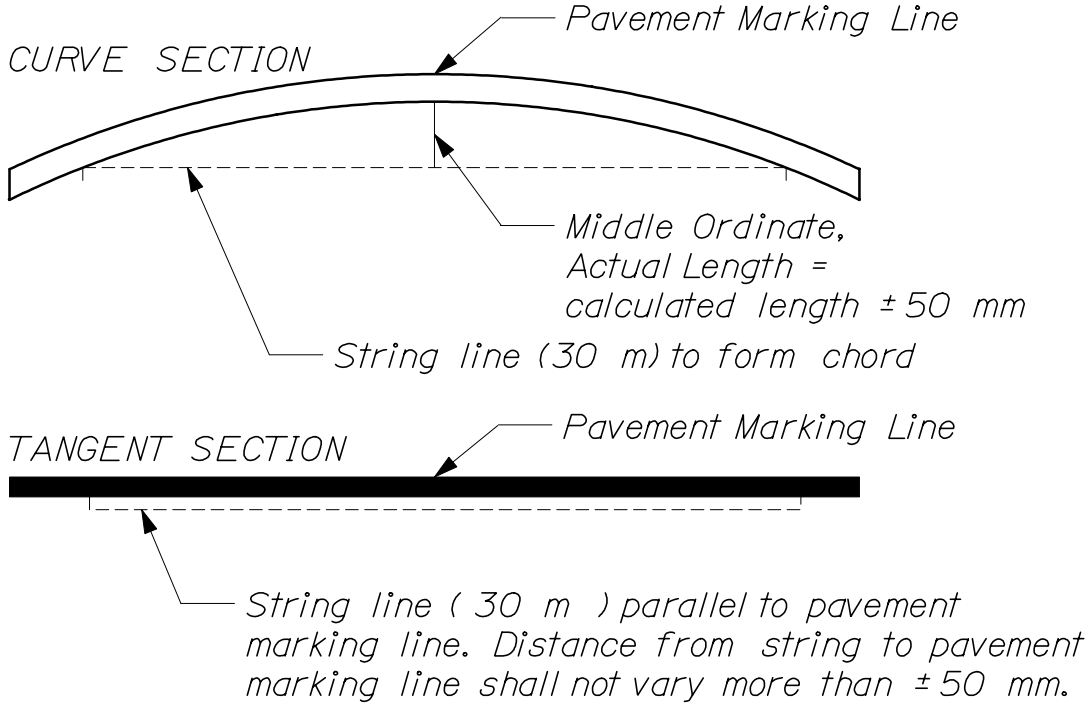

-- TOLERANCE FOR PAVEMENT MARKING LINES --

PAVEMENT MARKING

627(01)

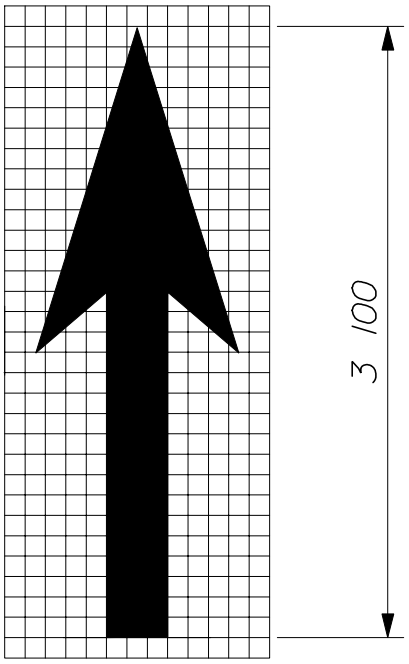

1.21 m²

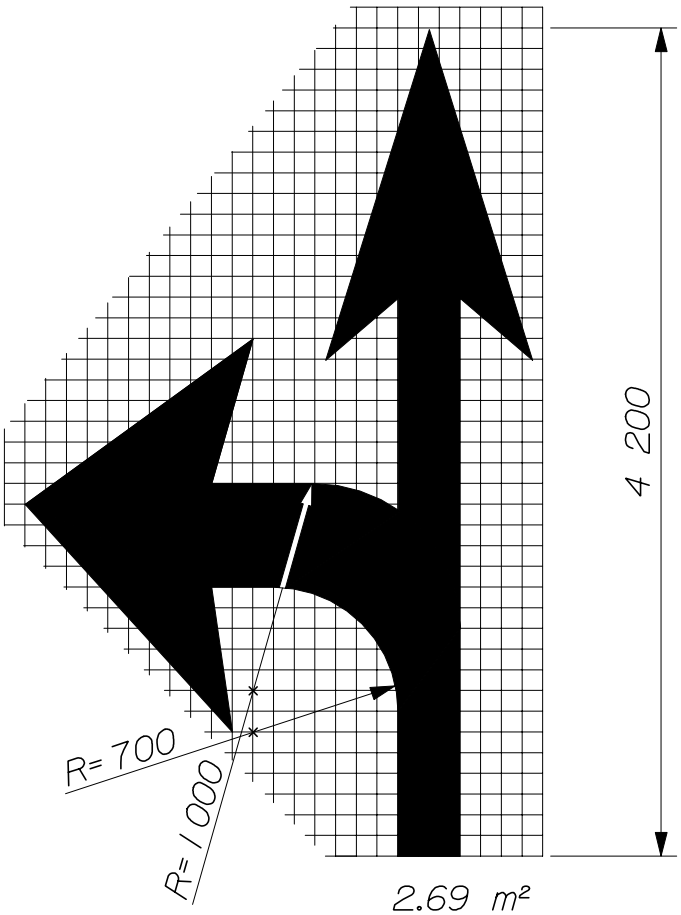

2.69 m²

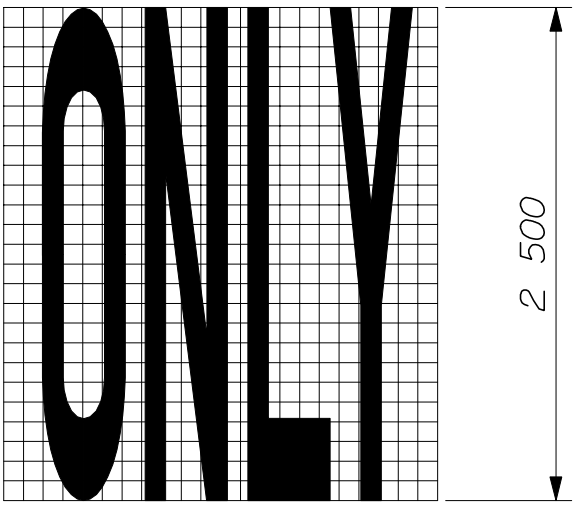

2.04 m²

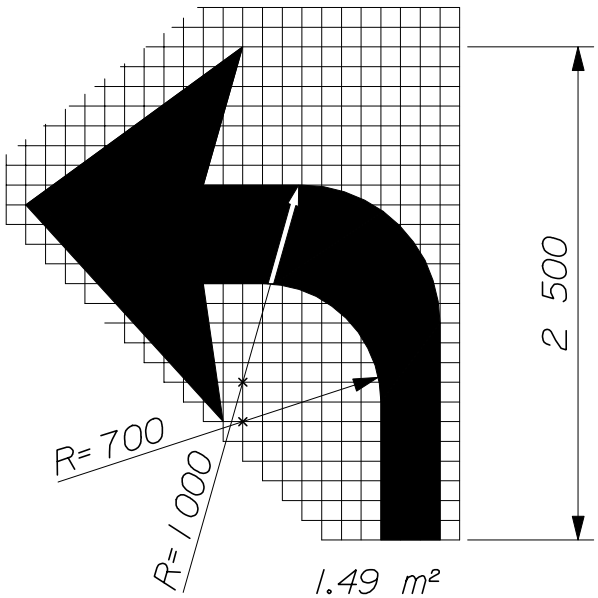

1.49 m²

NOTE: See page 627(01) for general notes on pavement markings.

PAVEMENT MARKING

627(02)

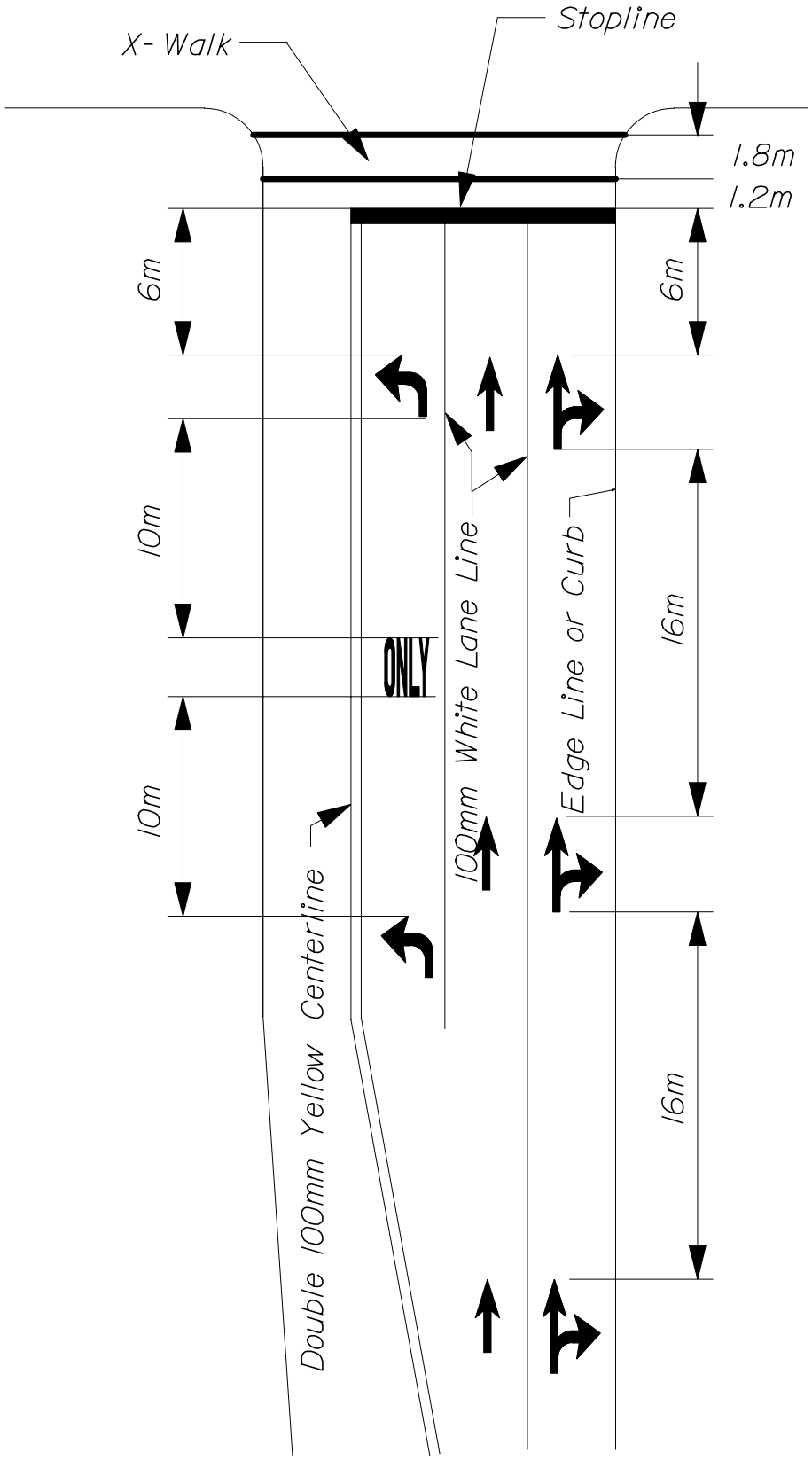

TYPICAL PLACEMENT OF PAVEMENT MARKING SYMBOLS
AT SIGNALIZED INTERSECTIONS

PAVEMENT MARKING

627(03)

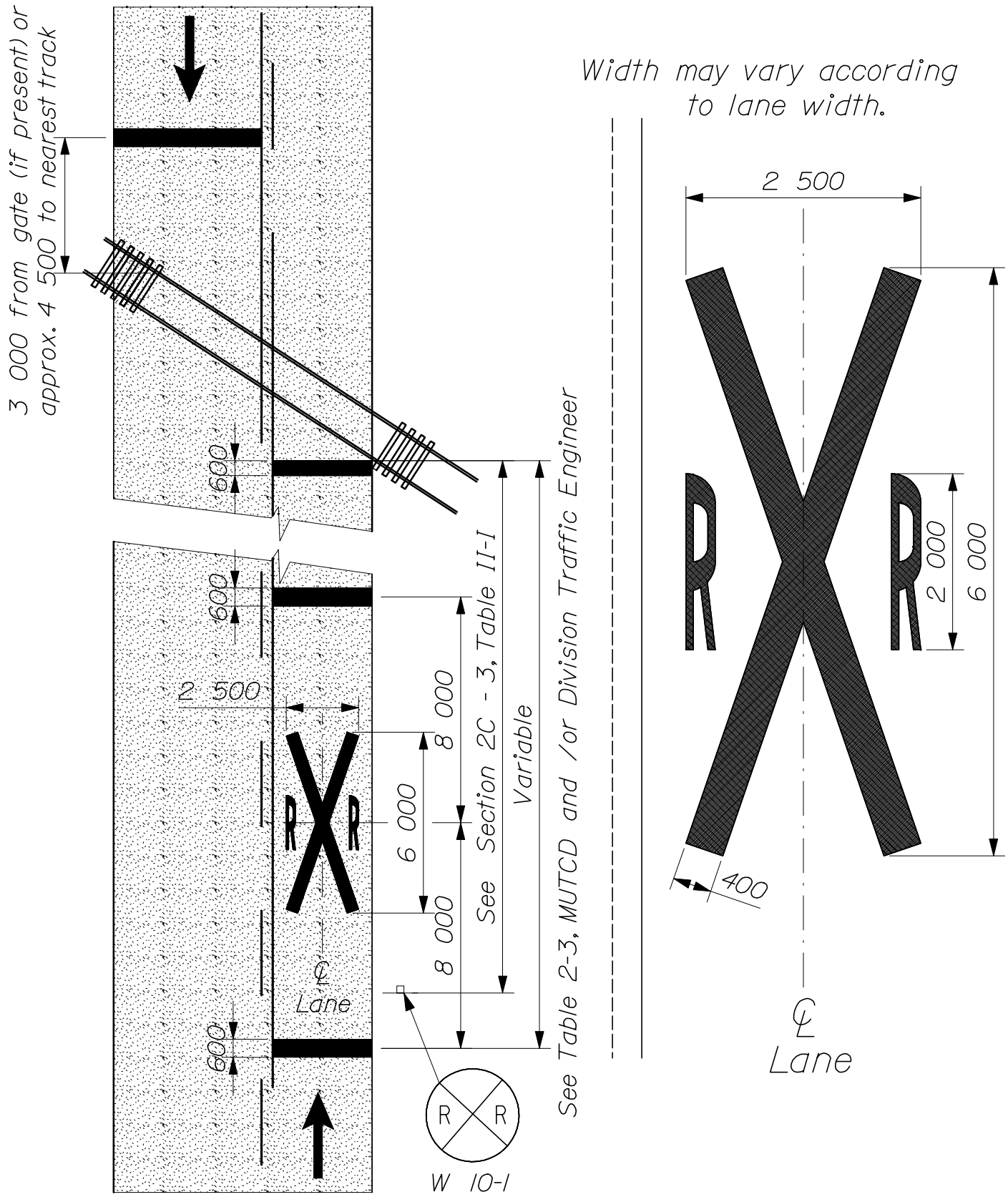

PAVEMENT MARKINGS AT RAILROAD GRADE CROSSINGS

627(04)

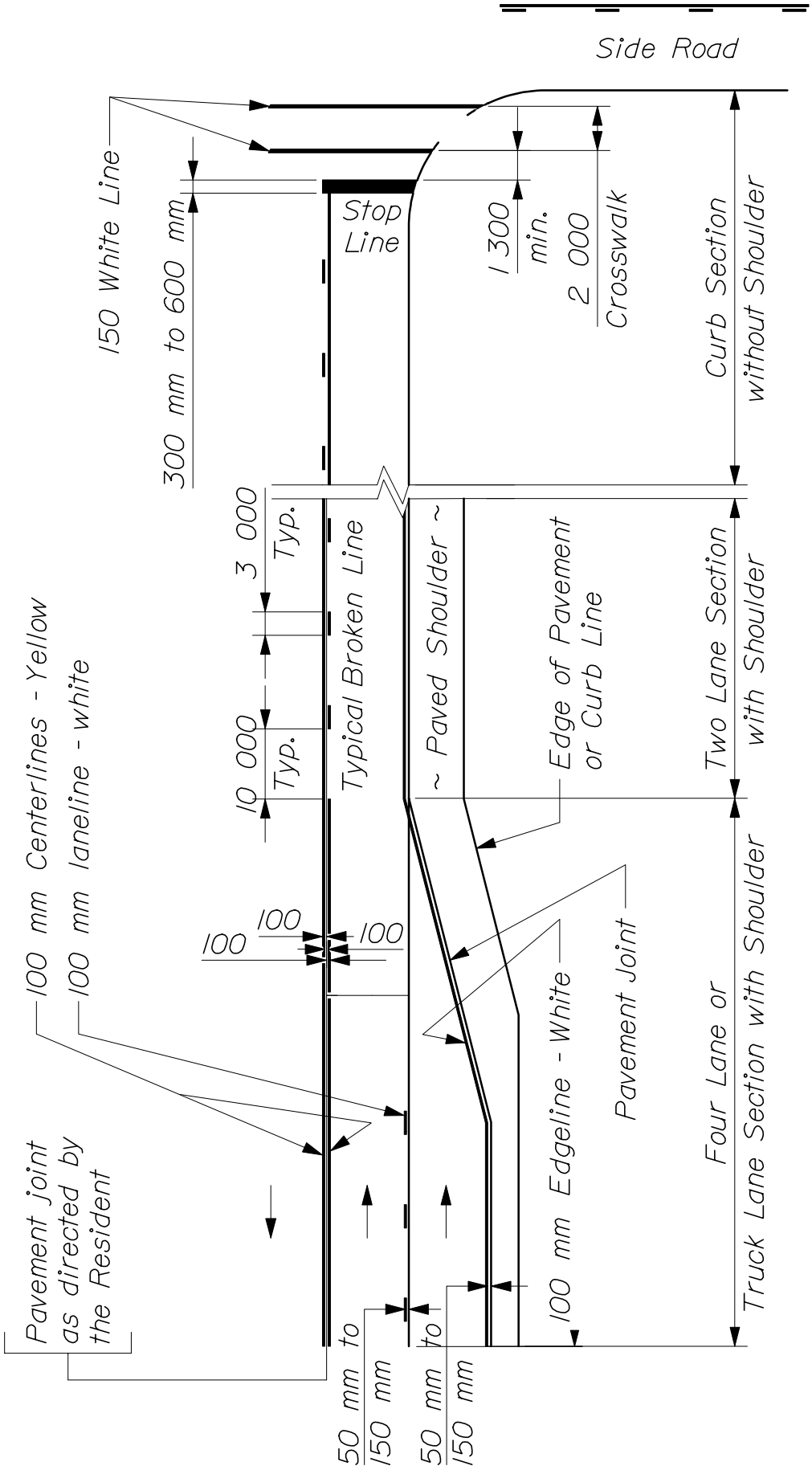

PAVEMENT MARKING
TYPICAL TWO - WAY ROADWAY

627(05)

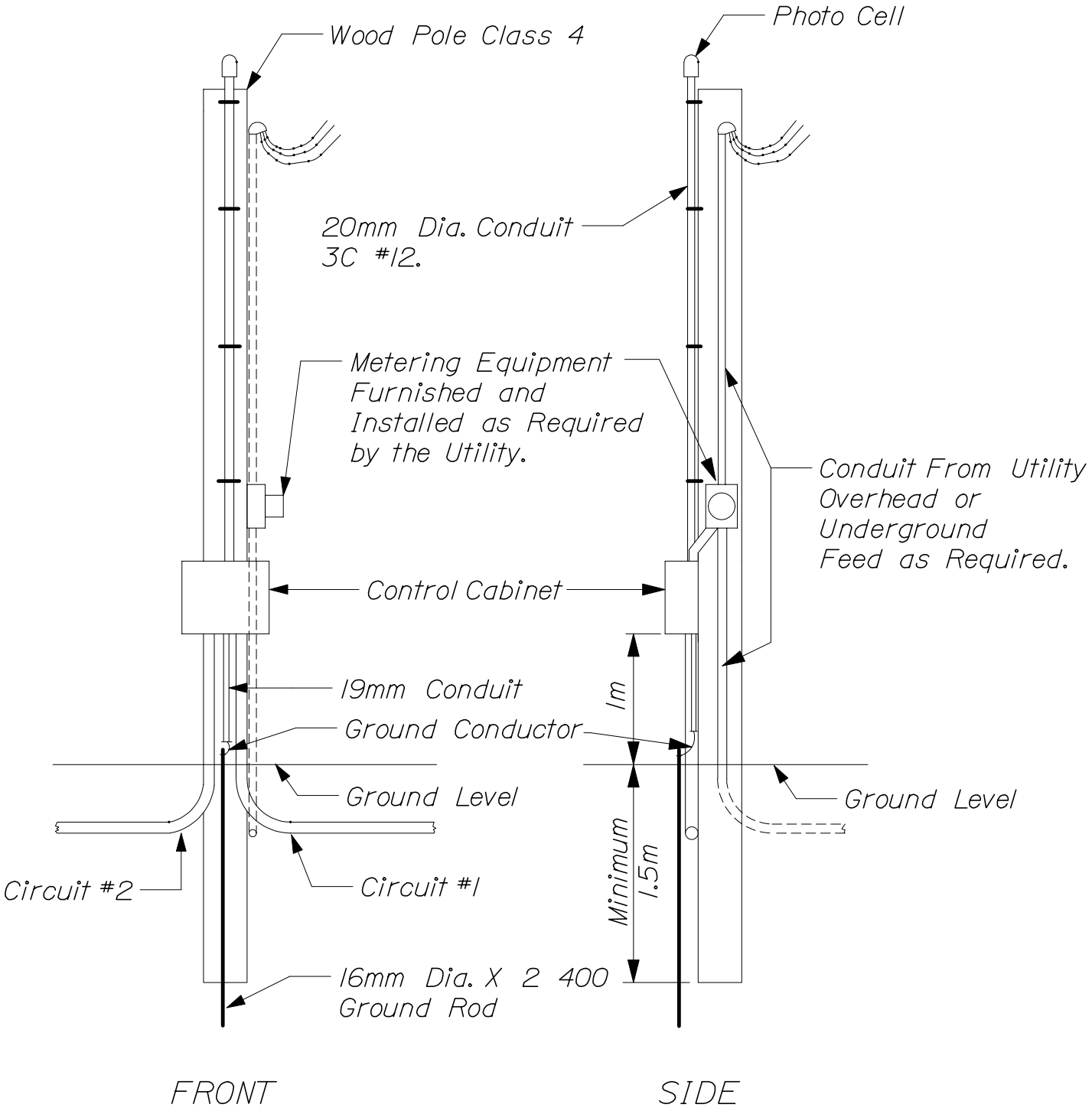

SERVICE POLE

HIGHWAY LIGHTING

634(01)

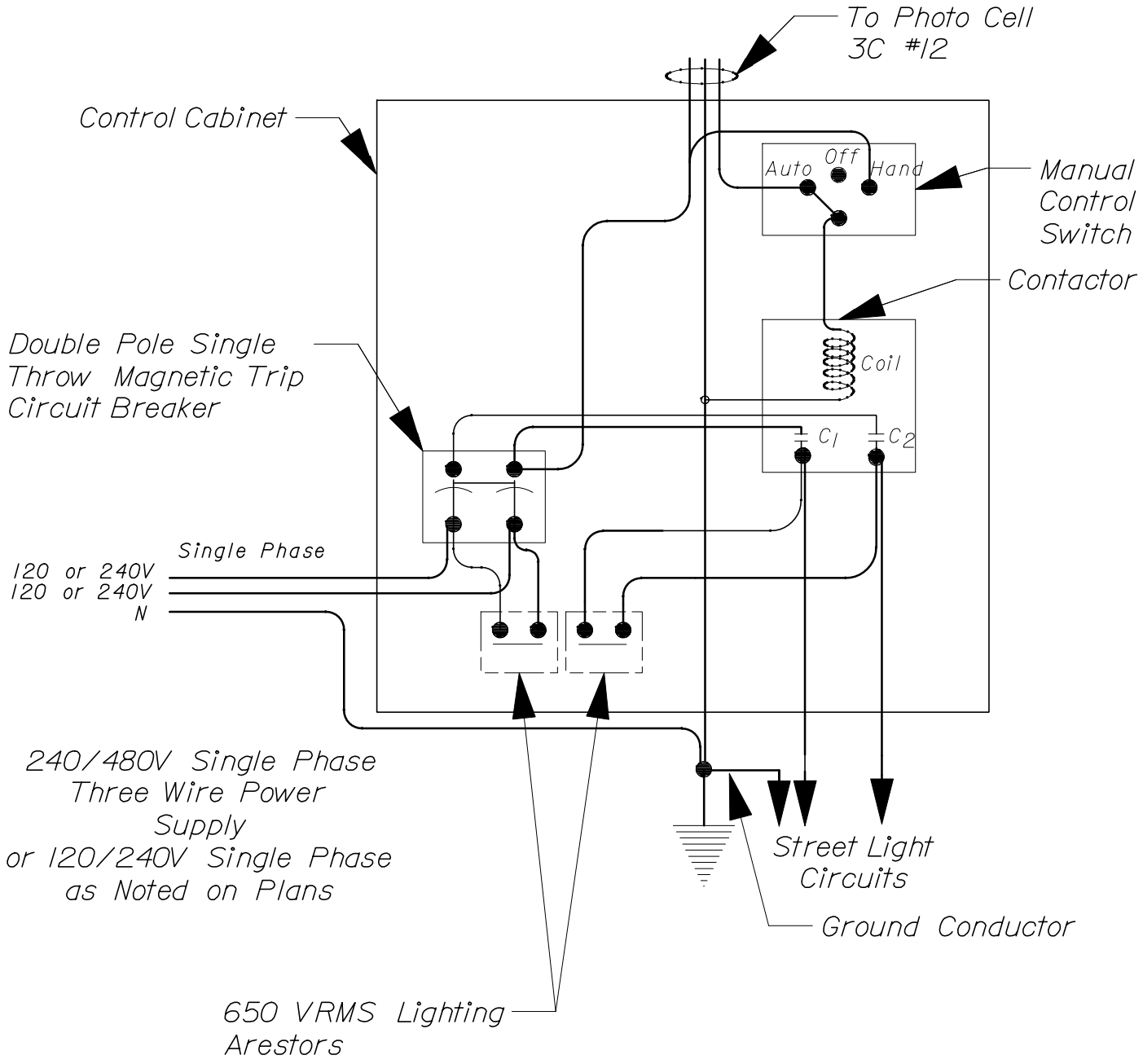

SCHEMATIC FOR STREET LIGHTING
CONTROL CABINET
ONE CIRCUIT

HIGHWAY LIGHTING

634(02)

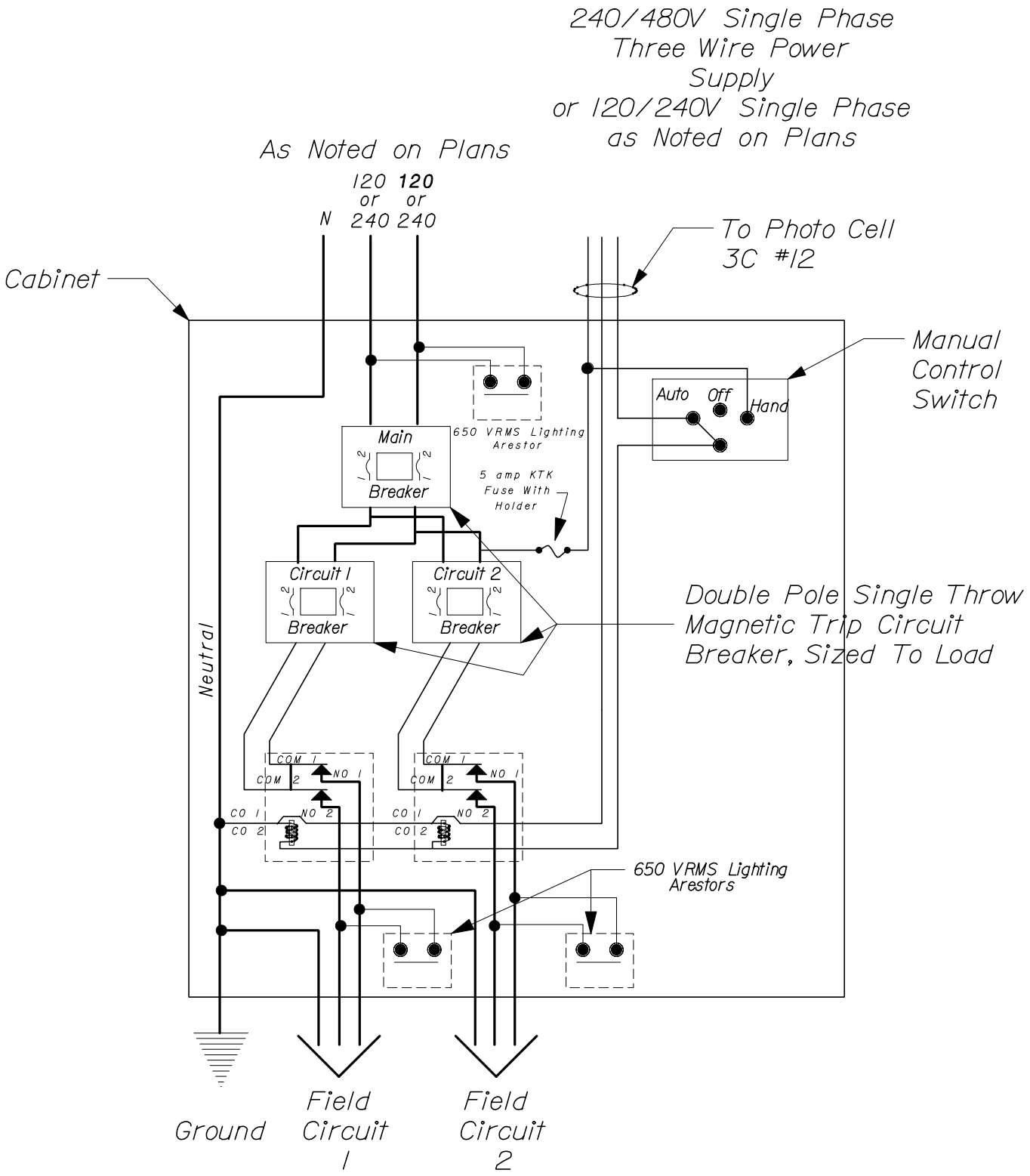

SCHEMATIC FOR STREET LIGHTING
CONTROL CABINET
MULTI CIRCUIT

HIGHWAY LIGHTING
634(03)

150 mm RISE / 300 mm TREAD (1:2 SLOPE)

REINFORCING STEEL

MARK	SIZE	NUMBER	LENGTH (EACH)
R	#16 1.570 kg/m	(2) each parapet (1) each 300 mm of width	275 mm for "A" +335 mm for each "B" +300 mm for "C"
S	#16 1.570 kg/m	(2) for "A" (2) for each "B" (2) for "C"	100 mm each parapet +300 mm per 300 mm of width

CONCRETE CLASS "A"

SECTION	STEPS PER 305 mm OF WIDTH	PARAPET EACH WALL
"A" header "B" each inter. Step "C" footer	0.020 m^3 0.023 m^3 0.025 m^3	0.010 m^3 0.016 m^3 0.017 m^3

200 mm RISE / 300 mm TREAD (1:1.5 SLOPE)

REINFORCING STEEL

MARK	SIZE	NUMBER	LENGTH (EACH)
R	#16 1.570 kg/m	(2) each parapet (1) each 300 mm of width	275 mm for "A" +363 mm for each "B" +300 mm for "C"
S	#16 1.570 kg/m	(2) for "A" (2) for each "B" (2) for "C"	100 mm each parapet +300 mm per 300 mm of width

CONCRETE CLASS "A"

SECTION	STEPS PER 305 mm OF WIDTH	PARAPET EACH WALL
"A" header "B" each inter. Step "C" footer	**0.025 m^3** **0.027 m^3** **0.028 m^3**	0.012 m^3 0.019 m^3 0.020 m^3

QUANTITIES FOR CONCRETE STEPS

642(01)

SPANWIRE

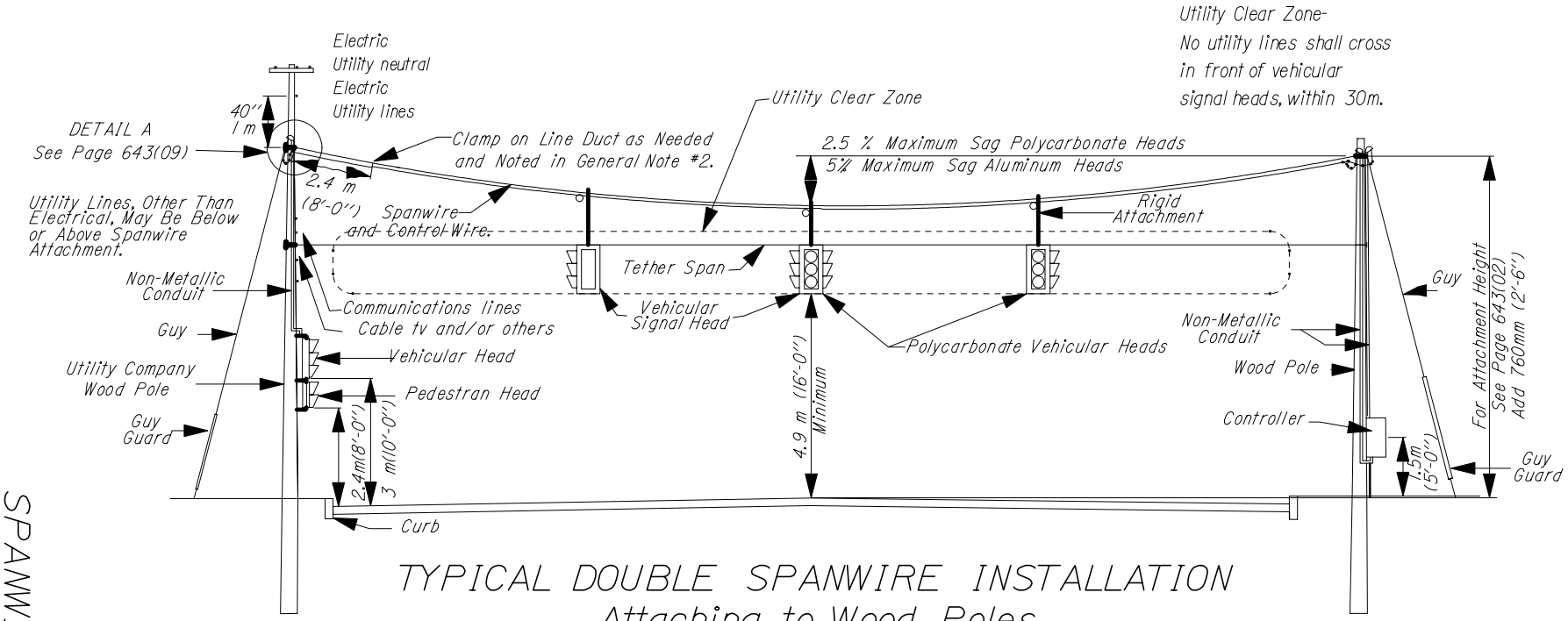

TYPICAL DOUBLE SPANWIRE INSTALLATION
Attaching to Wood Poles
(TETHER AT TOP OF SIGNAL HEADS)

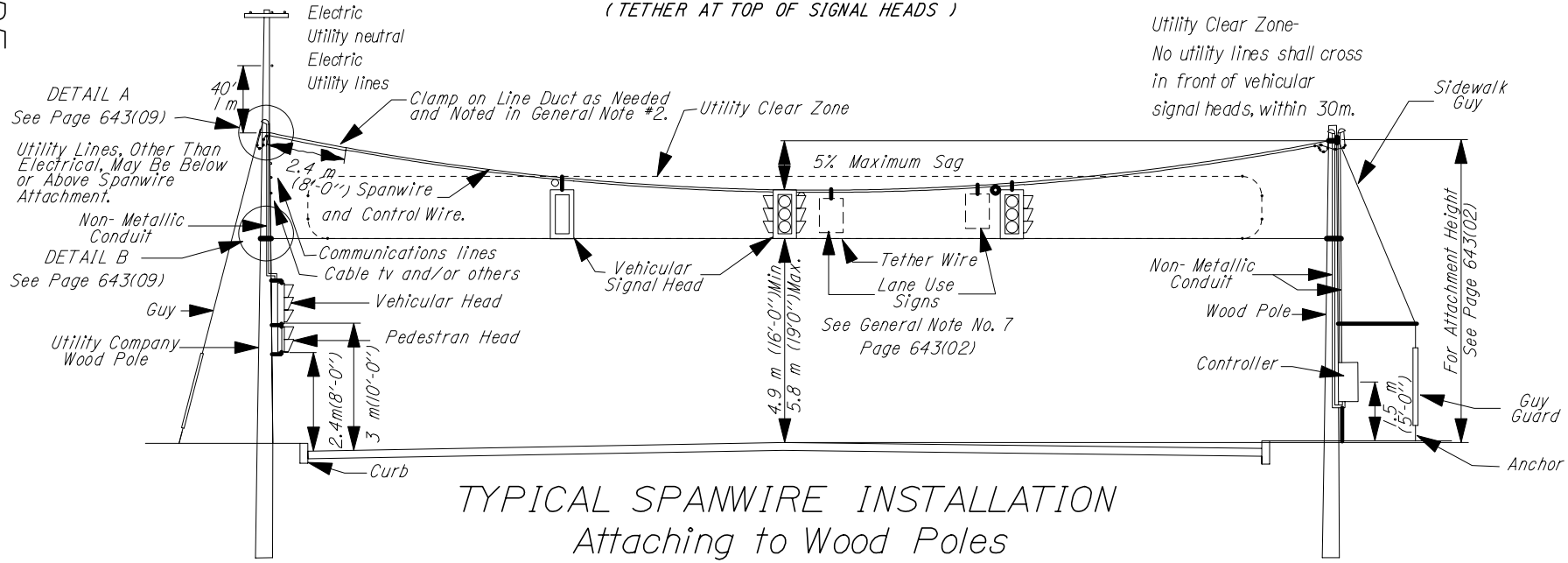

TYPICAL SPANWIRE INSTALLATION
Attaching to Wood Poles
(TETHER AT BOTTOM OF SIGNAL HEADS)

HEIGHT OF SPANWIRE ATTACHMENT

HORIZONTAL SPAN WIDTH	HEIGHT OF SPANWIRE ATTACHMENT- 5% Sag Aluminum Heads	HEIGHT OF TOP ATTACHMENT- 2.5% Sag DOUBLE SPANWIRE Polycarbonate Heads
UP TO 11.6m (38ft)	6.70m (22'-0'')	7.11m (23'-4'')
12.2m (40ft)	6.86m (22'-6'')	7.16m (23'-6'')
13.7m (45ft)	6.93m (22'-9'')	
15.2m (50ft)	7.01m (23'-0'')	7.24m (23'-9'')
16.8m (55ft)	7.08m (23'-3'')	
18.3m (60ft)	7.16m (23'-6'')	7.31m (24'-0'')
19.8m (65ft)	7.24m (23'-9'')	
21.3m (70ft)	7.31m (24'-0'')	7.39m (24'-3'')
22.9m (75ft)	7.39m (24'-3'')	
24.4m (80ft)	7.47m (24'-6'')	7.46m (24'-6'')
26.0m (85ft)	7.54m (24'-9'')	
27.4m (90ft)	7.62m (25'-0'')	7.54m (24'-9'')
29.0m (95ft)	7.69m (25'-3'')	
30.5m (100ft)	7.77m (25'-6'')	7.62m (25'-0'')
32.0m (105ft)	7.84m (25'-9'')	
33.5m (110ft)	7.92m (26'-0'')	7.69m (25'-3'')
35.0m (115ft)	8.00m (26'-3'')	
36.5m (120ft)	8.07m (26'-6'')	7.77m (25'-6'')
38.0m (125ft)	8.15m (26'-9'')	
39.6m (130ft)	8.23m (27'-0'')	7.85m (25'-9'')
41.0m (135ft)	8.31m (27'-3'')	
42.7m (140ft)	8.38m (27'-6'')	7.92m (26'-0'')
44.2m (145ft)	8.45m (27'-9'')	
45.7m (150ft)	8.53m (28'-0'')	8.00m (26'-3'')
47.2m (155ft)	8.61m (28'-3'')	
48.7m (160ft)	8.68m (28'-6'')	8.08m (26'-6'')
50.0m (165ft)	8.86m (28'-9'')	

GENERAL NOTES for TRAFFIC SIGNAL SPANWIRE

1. HEIGHT OF SPANWIRE ATTACHMENT IS SHOWN ON CHART ABOVE. WHEN ATTACHING TO UTILITY CO. OWNED POLES THE CONTRACTOR SHALL CHECK WITH RESPECTIVE UTILITY COMPANIES TO DETERMINE IF ALL ADJUSTMENTS HAVE BEEN MADE.
2. WHEN UTILITY POLE CLEARANCES CANNOT BE MET, THE SIGNAL SPANWIRE SHALL BE PROTECTED BY FLEXIBLE SCHEDULE 40 LINE DUCT.
3. THE UTILITY COMPANIES SHALL BE RESPONSIBLE FOR AVOIDING THE TRAFFIC SIGNAL CLEAR ZONE AS SHOWN BELOW. AT THE PRE-CONSTRUCTION UTILITY MEETING CONFLICTS, IF ANY, WILL BE RESOLVED.
4. CONDUITS INSTALLED ON UTILITY COMPANY OWNED POLES WILL BE INSTALLED BY THE RESPECTIVE UTILITY. THE CONDUIT WILL BE PROVIDED BY THE SIGNAL CONTRACTOR.
5. UTILITIES WILL BE NO LOWER THAN 5.9m AT MID SPAN.
6. THE LOCATION OF ALL SIGNAL EQUIPMENT AND RELATED ITEMS SHALL BE IN CONFORMITY WITH 'AMERICANS WITH DISABILITIES ACT' (ADA) ACCESSIBILITY STANDARDS. USE OF SIDEWALKS AND PEDESTRIAN RAMPS SHALL NOT BE OBSTRUCTED.
7. LANE USE SHALL BE HUNG USING "PELCO" ASSEMBLY PART NO. SE-5111 OR EQUAL. VEHICULAR HEADS SHALL BE HANG USING 'PELCO' ASSEMBLY PART NO. SE-5024 OR SE-5073, OR EQUAL.

SPANWIRE

TRAFFIC SIGNALS

643(02)

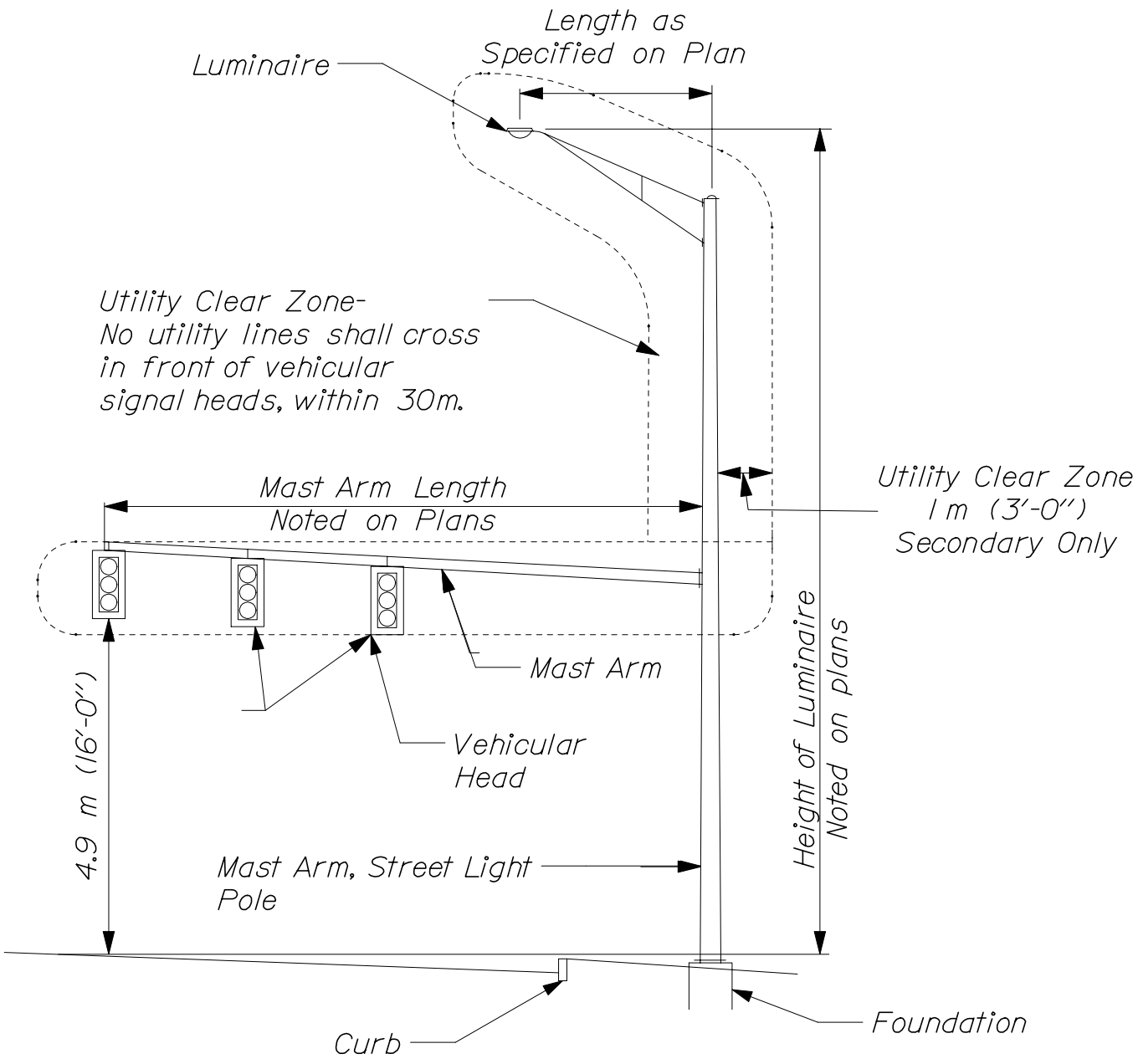

TYPICAL MAST ARM, STREET LIGHT
INSTALLATION

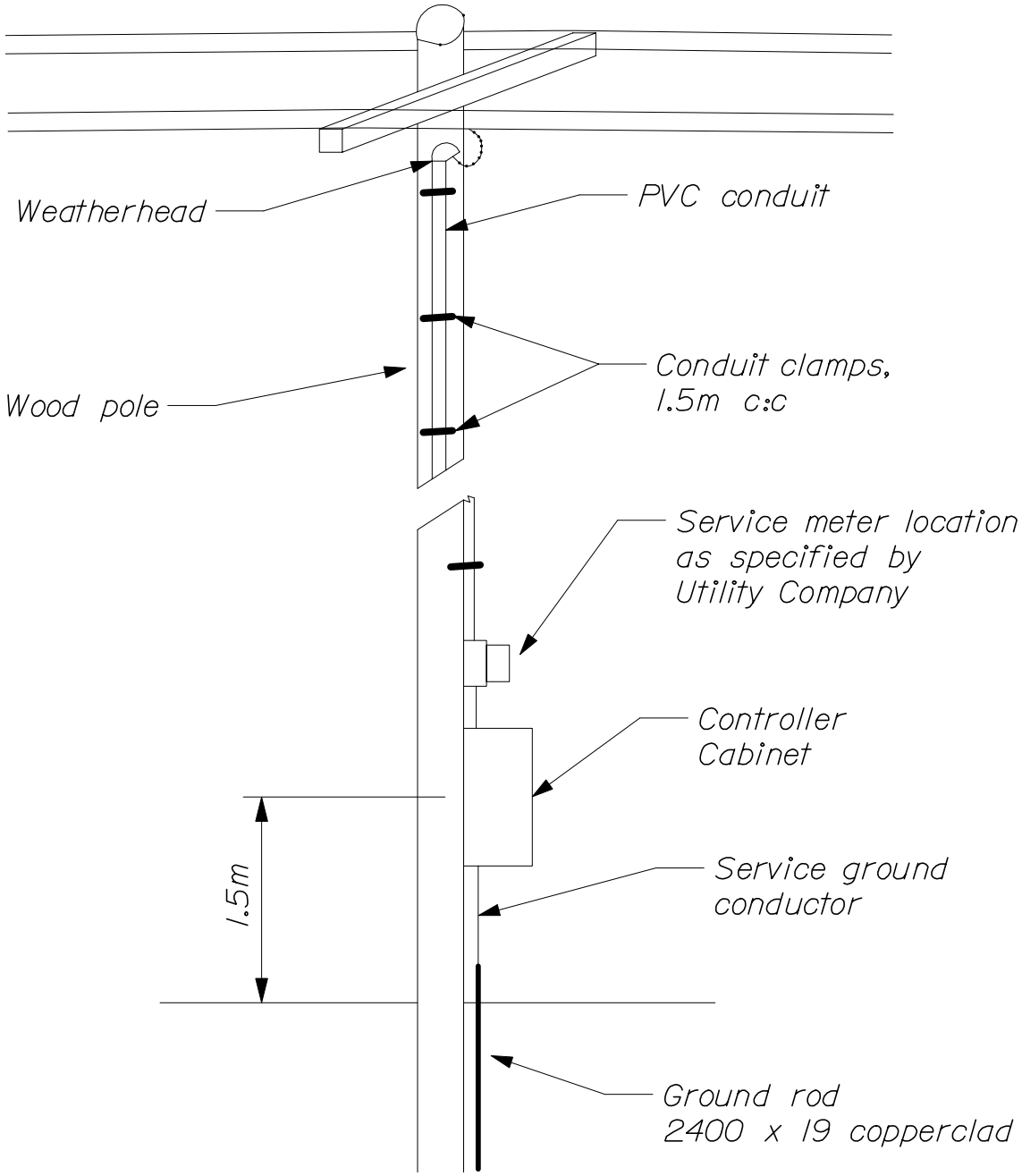

SERVICE CONNECTION

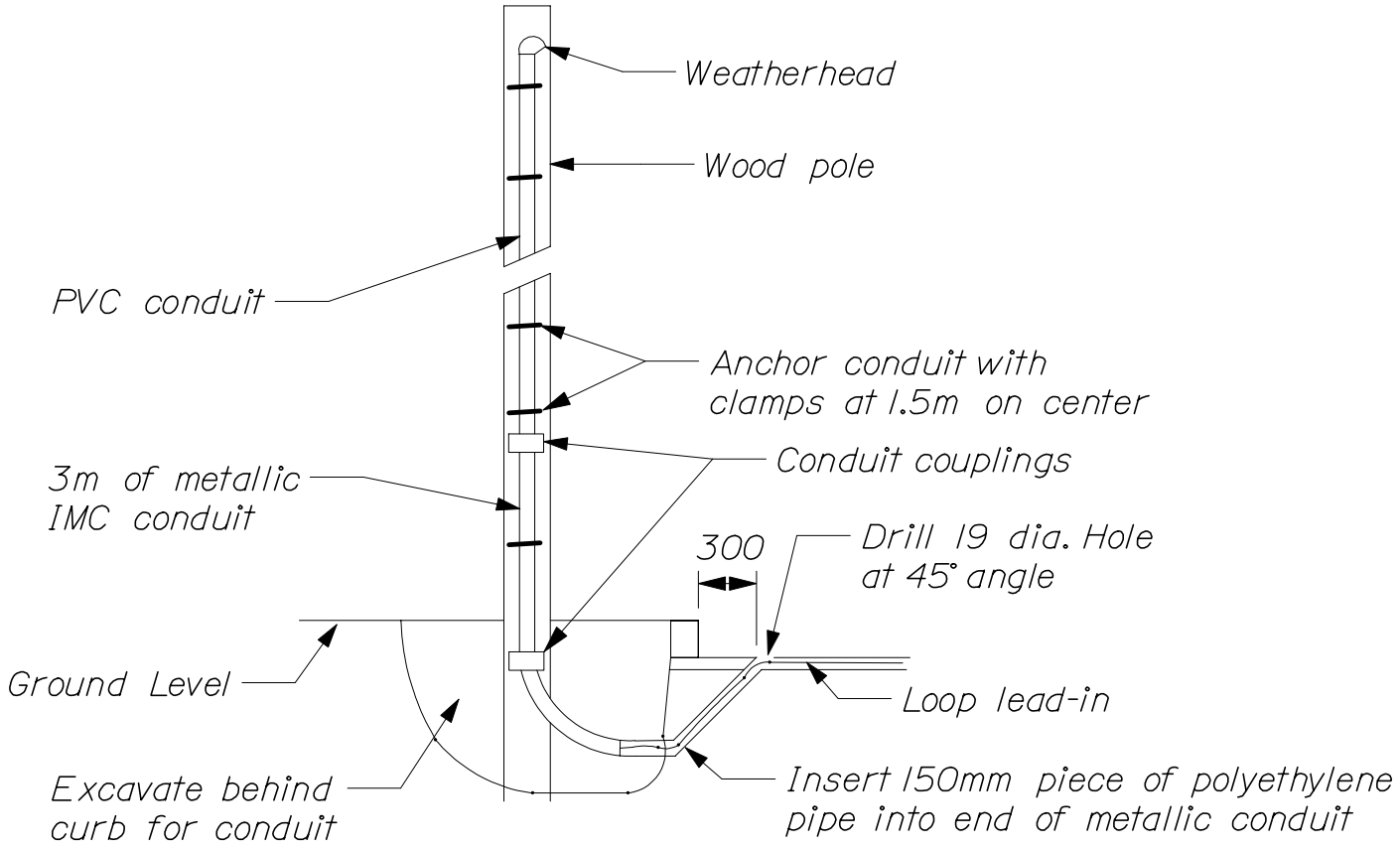

CURB SECTION

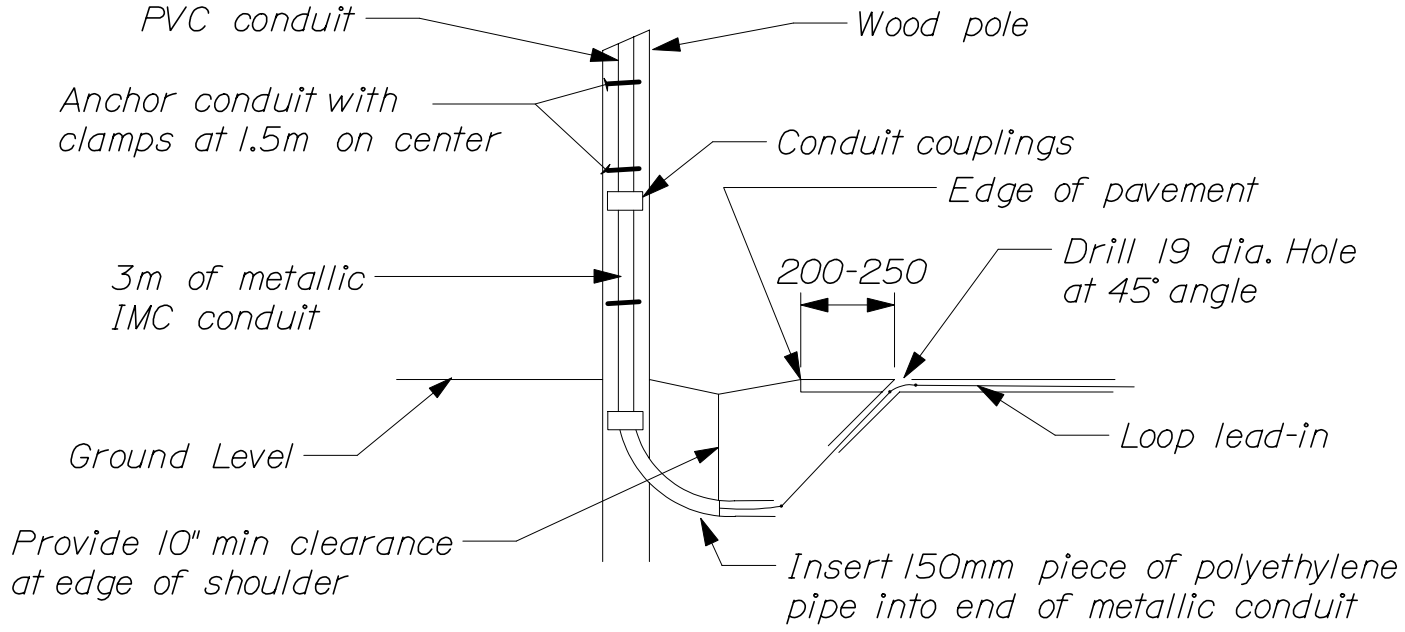

SHOULDER SECTION

DETECTOR LEAD-IN INSTALLATION

TRAFFIC SIGNALS

643(05)

NOTES:
Location and configuration of loops are subject to approval of the Resident in the field. Number of turns of wire in loops and number of loops per amplifier shall be in accordance with the manufacturer's recommendations. Loop slots shall be filled with an approved two-component epoxy embedding sealer.

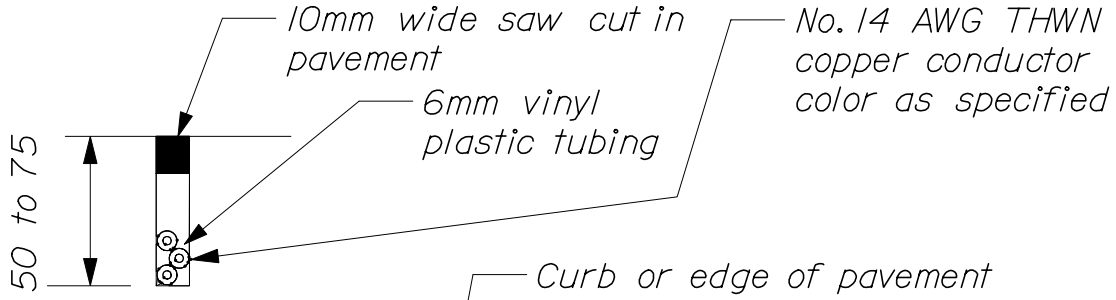

SECTION A - A

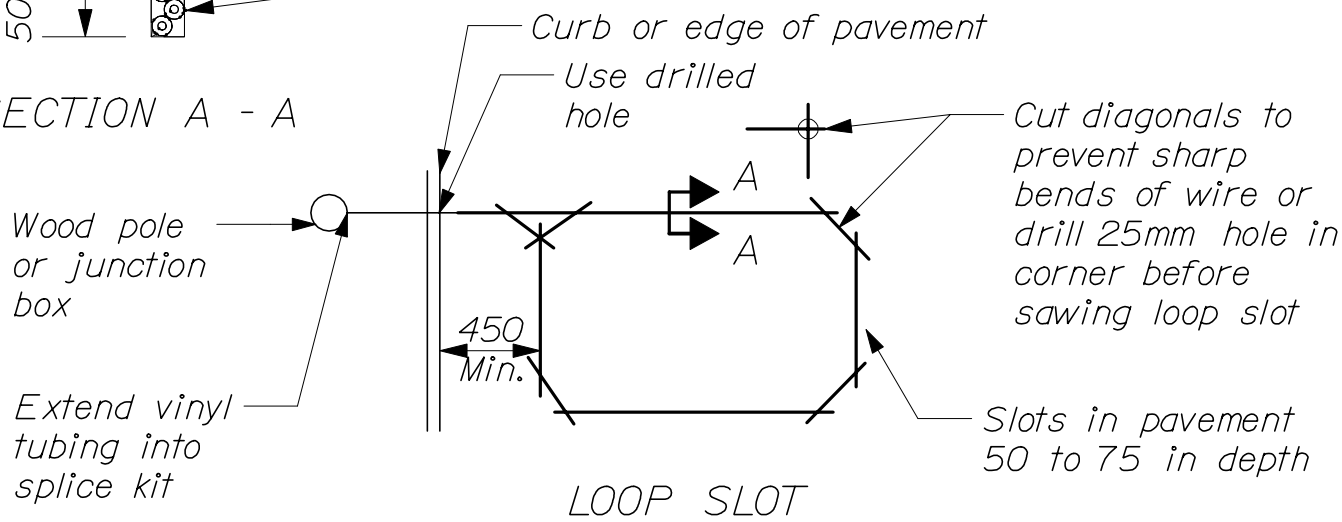

LOOP SLOT

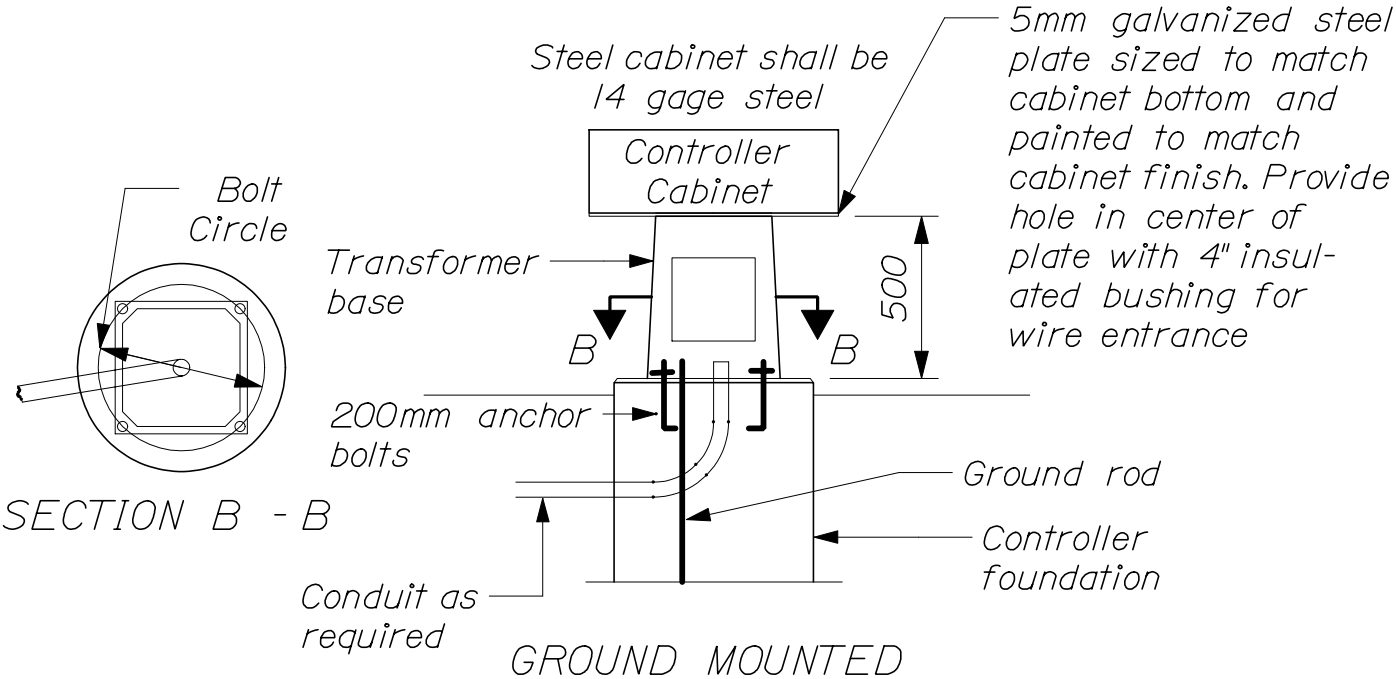

SECTION B - B

GROUND MOUNTED CONTROLLER

TRAFFIC SIGNALS

643(06)

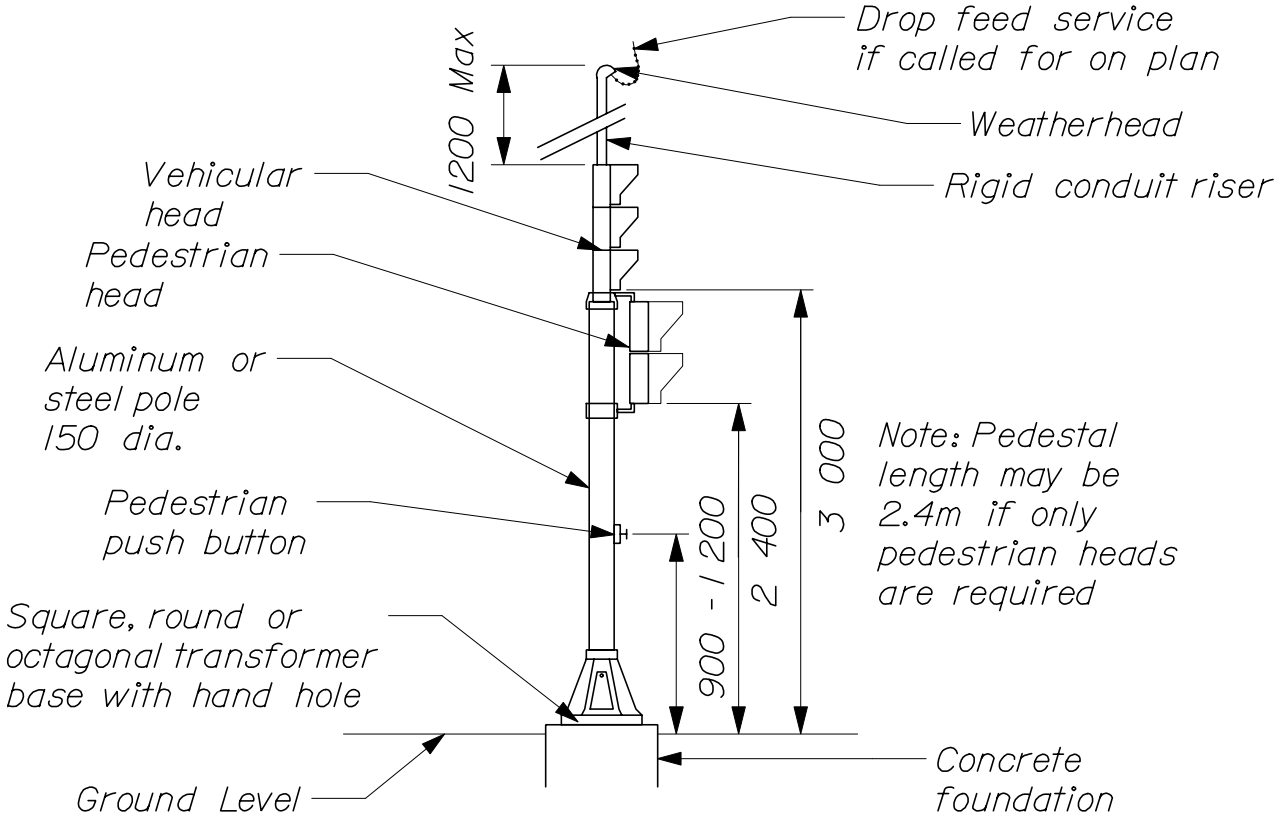

PEDESTAL

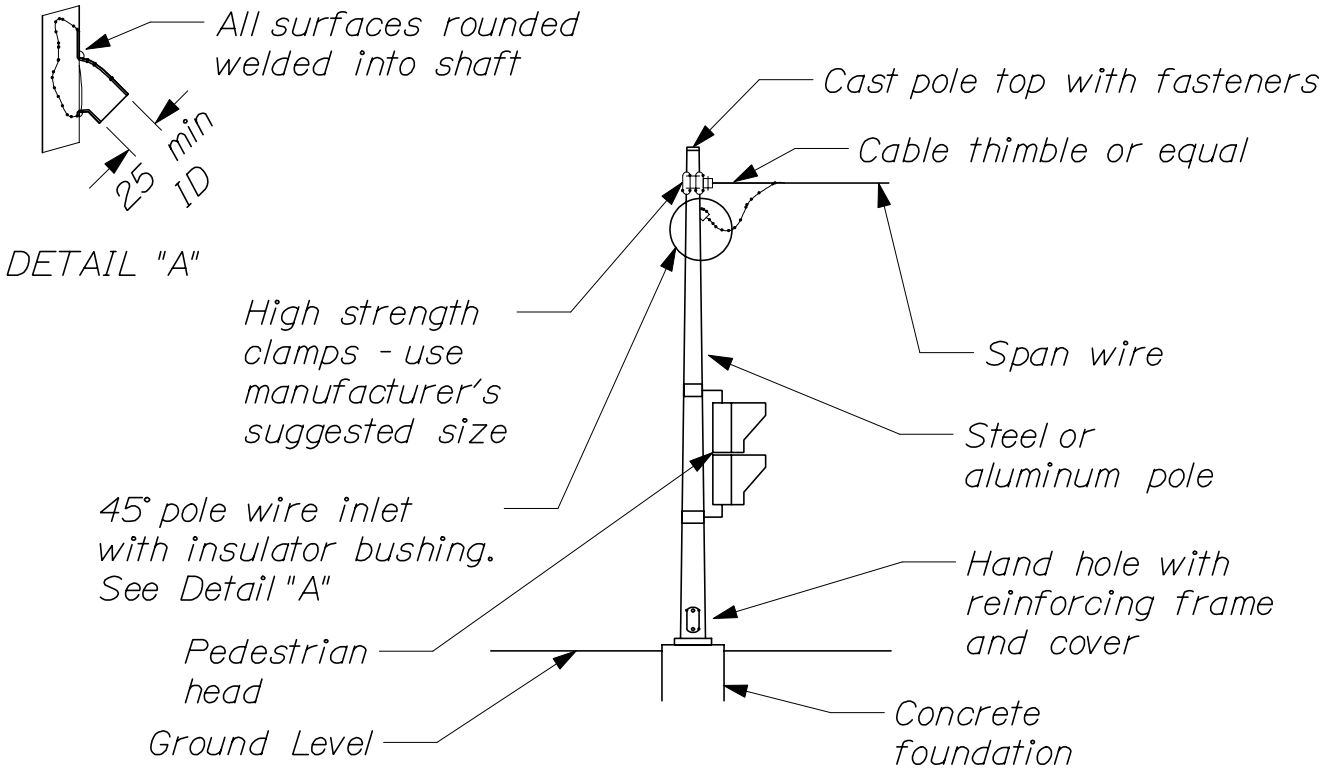

ORNAMENTAL STRAIN POLE

TRAFFIC SIGNALS

643(07)

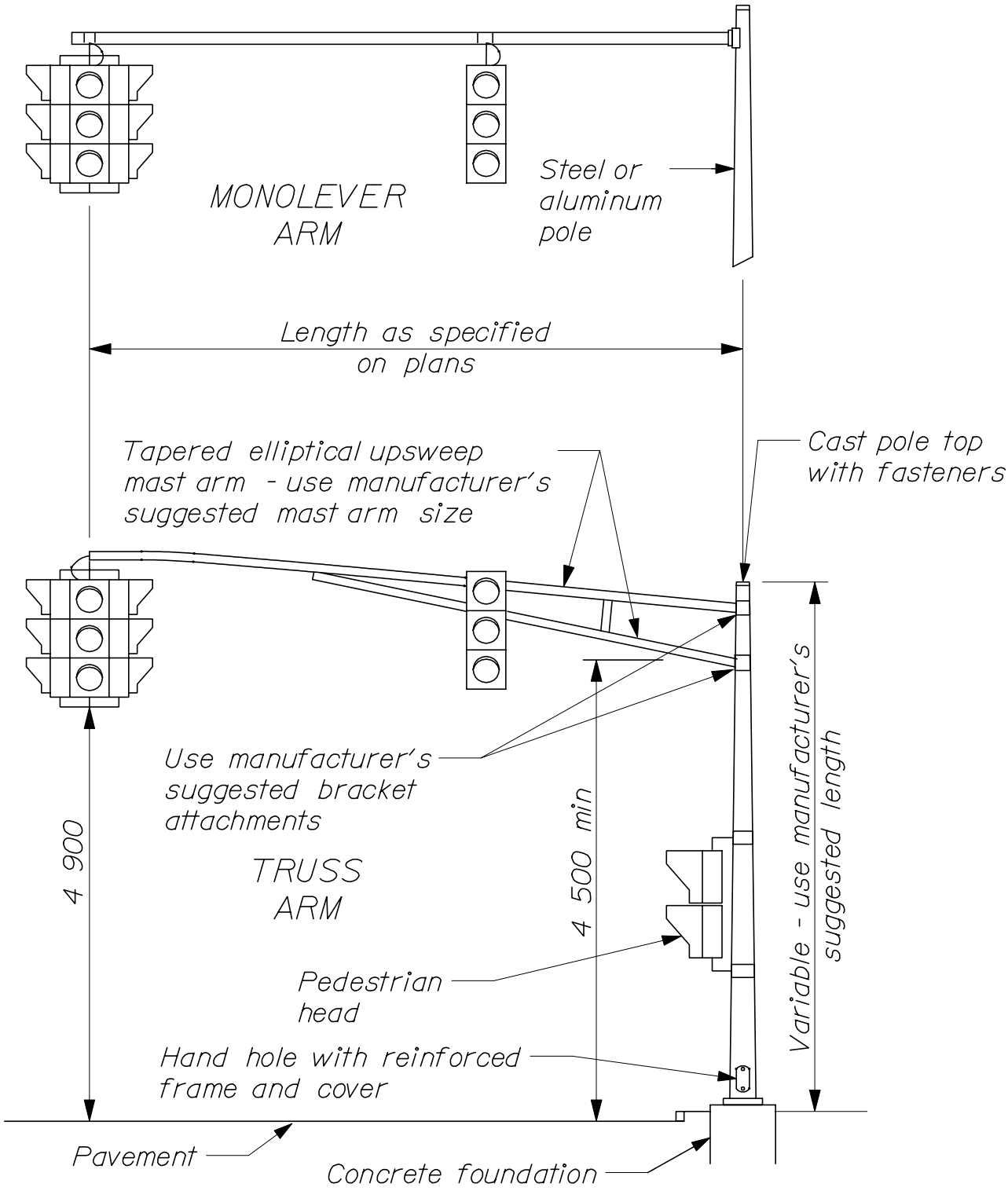

ORNAMENTAL MAST ARM POLE

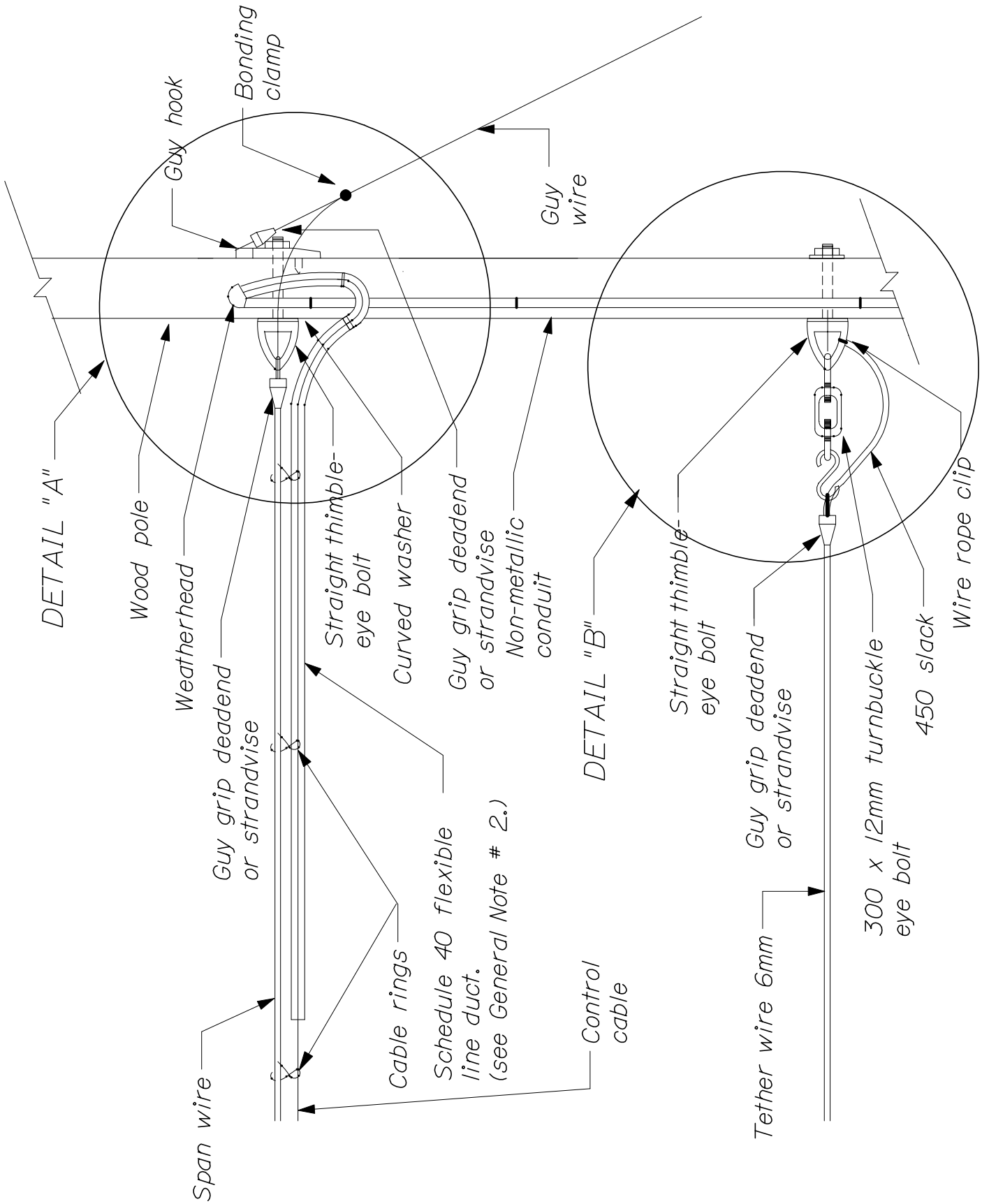

TYPICAL SPANWIRE INSTALLATION
Attaching to Wood Poles

TRAFFIC SIGNALS
643(09)

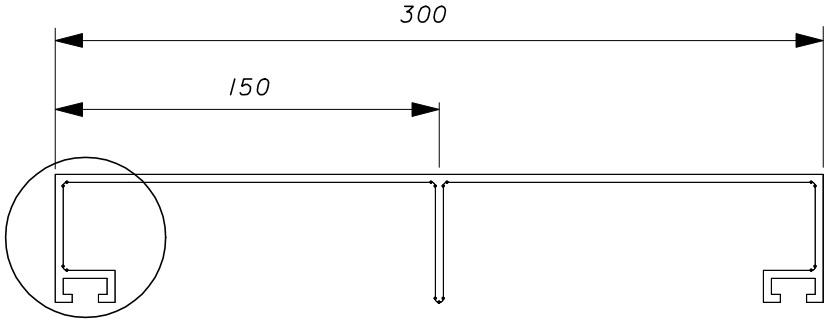

300mm EXTRUDED ALUMINUM PLANK

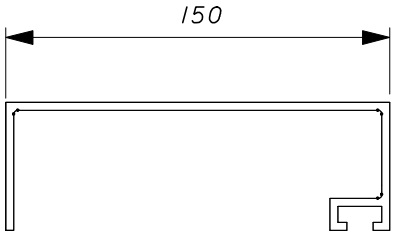

150mm EXTRUDED ALUMINUM PLANK

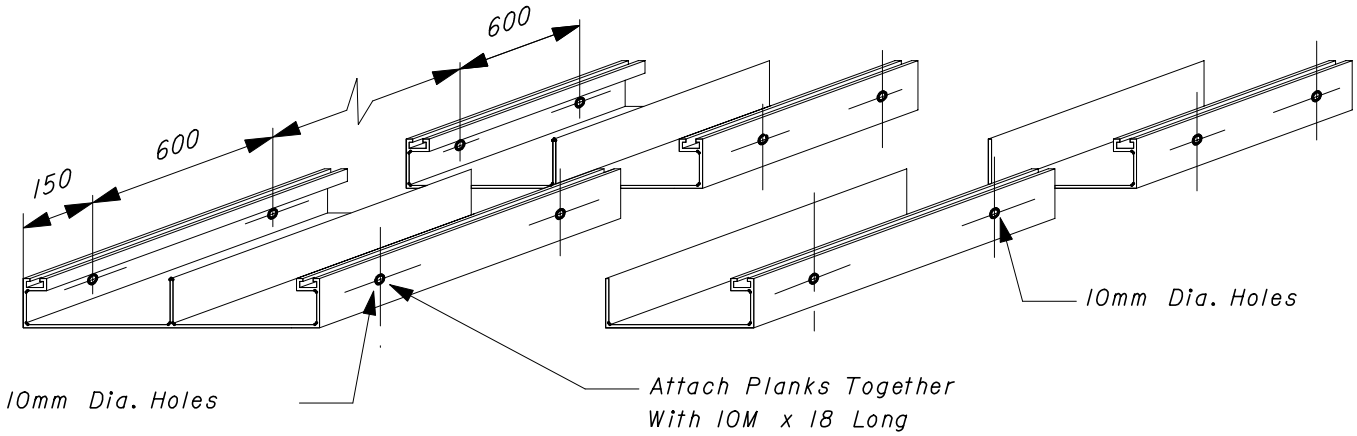

BOLT HOLE PUNCHING PLAN
FOR EXTRUDED ALUMINUM PLANKS

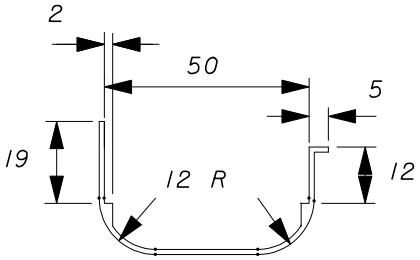

SIDE TRIM
MOLDING

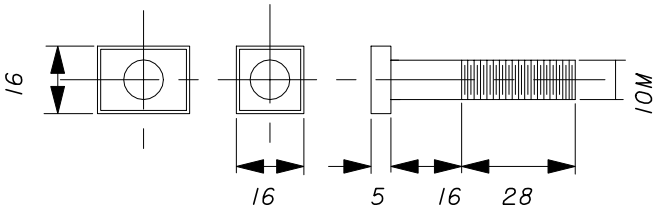

POST CLIP BOLT

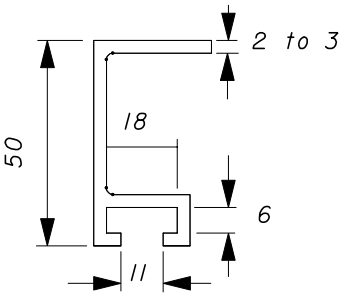

Detail A

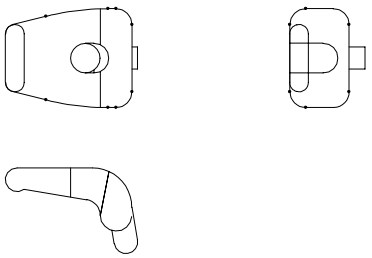

POST CLIP

ITEM NO. 645.251

TYPE I SIGNS
HIGHWAY SIGNING

645(01)

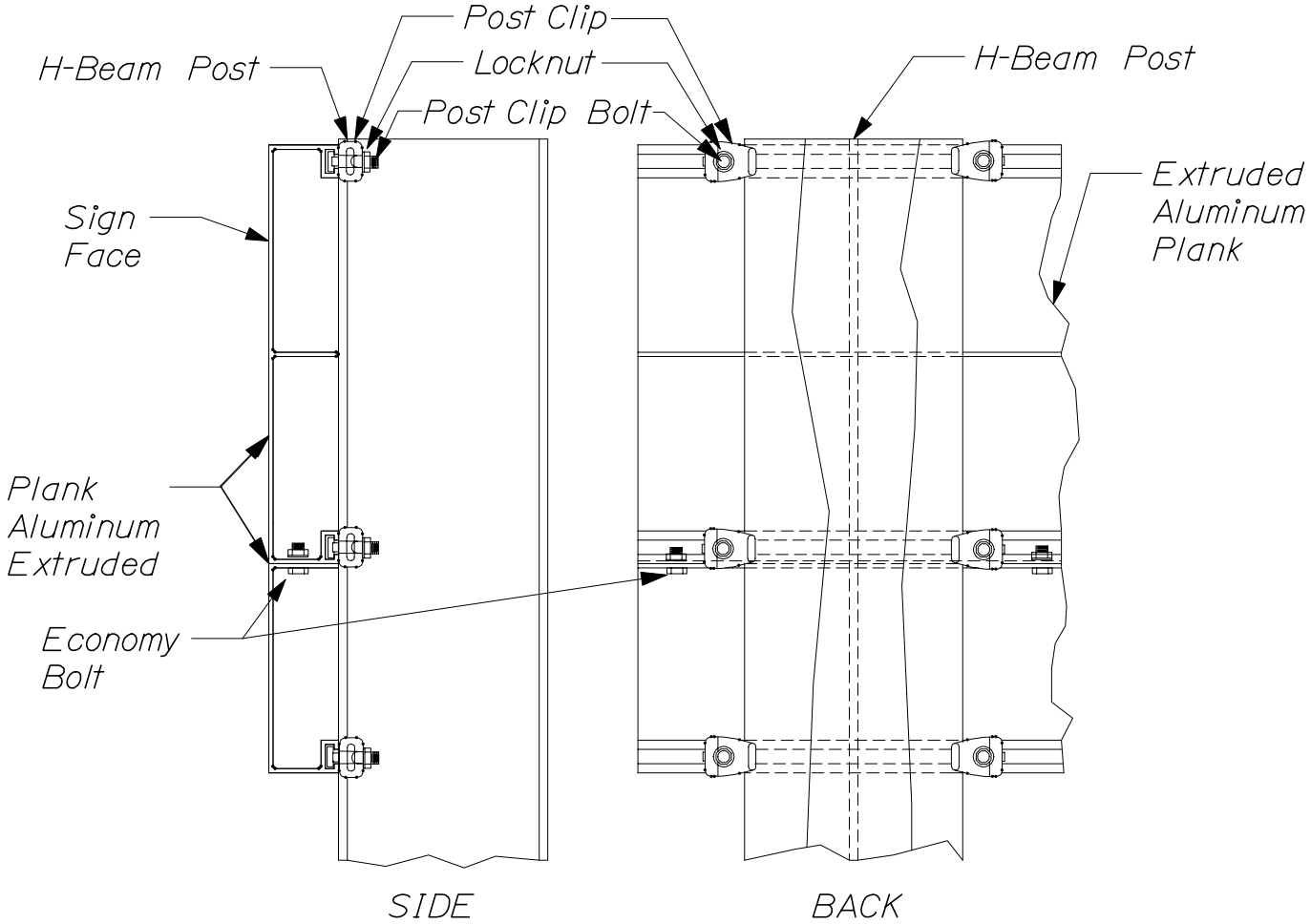

ATTACHMENT OF EXTRUDED ALUMINUM PLANKS TO H-BEAM POSTS

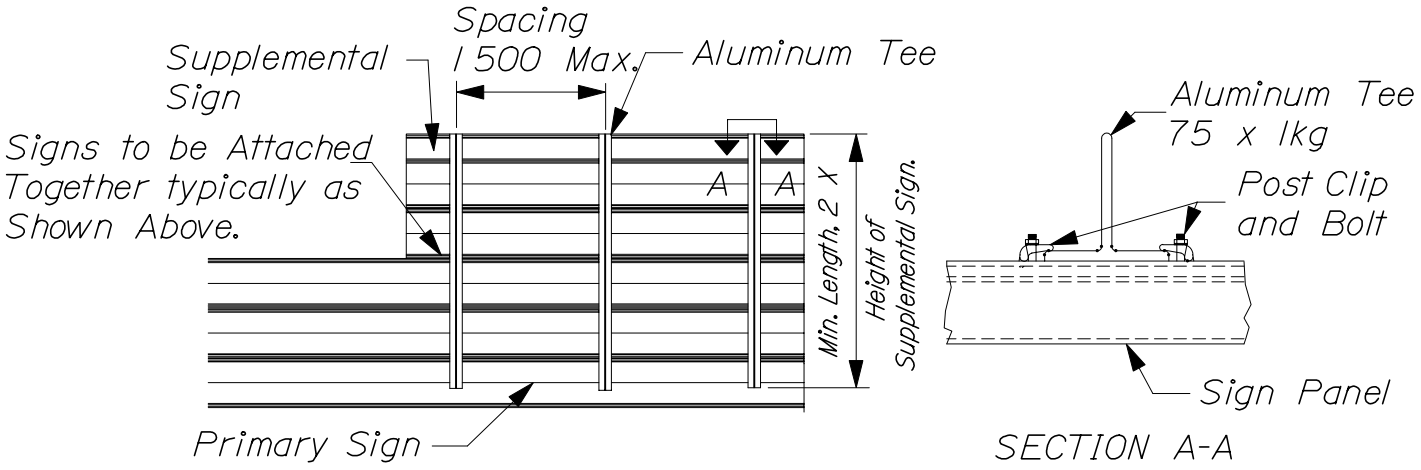

ATTACHMENT OF SUPPLEMENTAL SIGNS
(Exit Panels)

ITEM NO. 645.251

TYPE I SIGNS
HIGHWAY SIGNING

645(02)

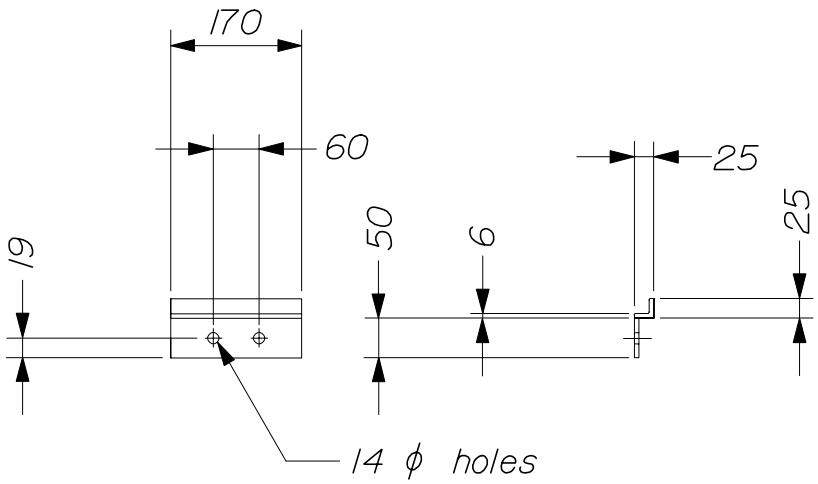

Shipped location of Z-piece, one per W-shape

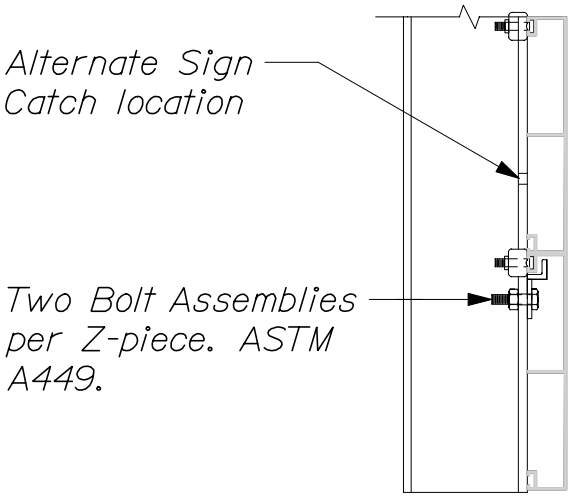

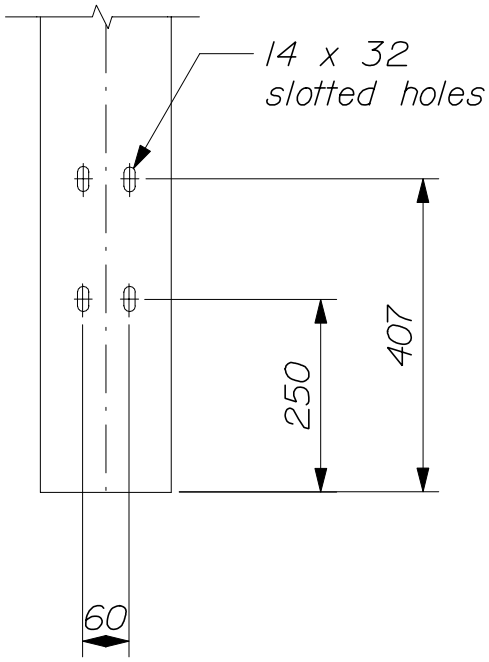

Z-Piece may be fabricated.

ATTACHMENT OF EXTRUDED ALUMINUM PLANKS TO OVERHEAD AND OVERPASS SIGN SUPPORT STRUCTURES

HIGHWAY SIGNING

OVERPASS MOUNTED SIGN SUPPORT

645(3)

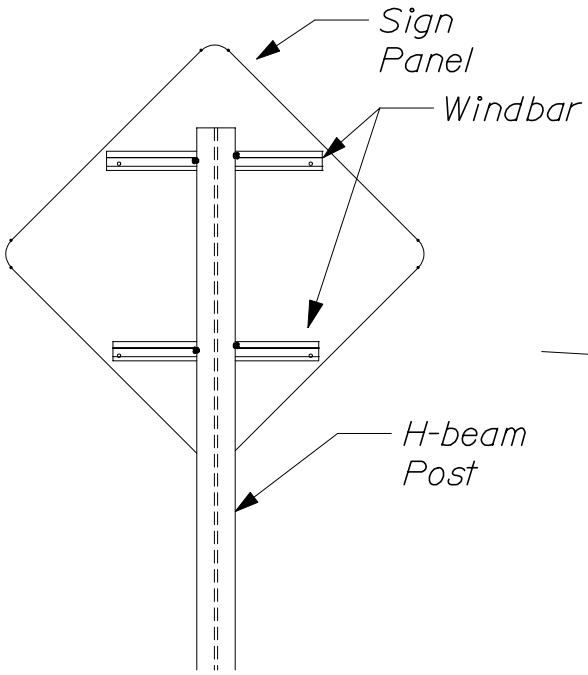

BACK

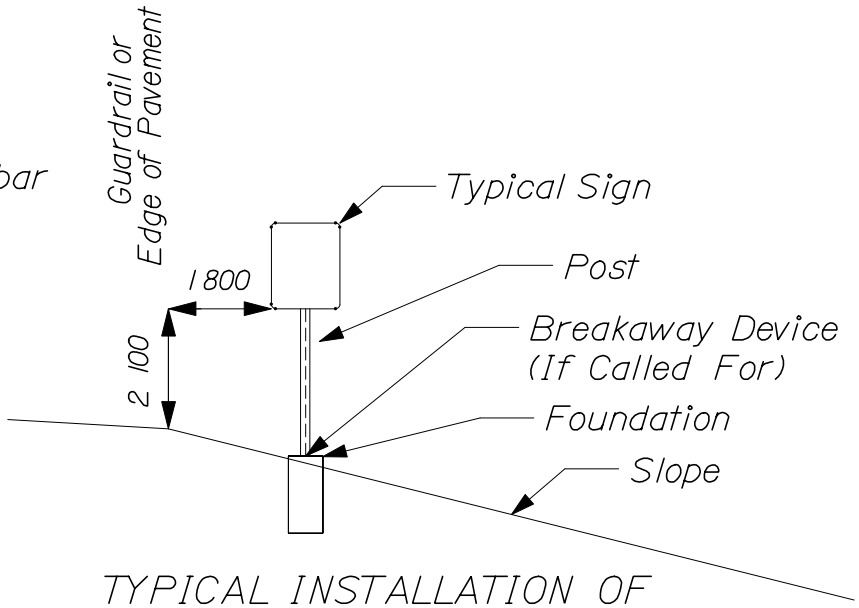

TYPICAL INSTALLATION OF
TYPE I SIGNS

(Not shown on the Cross Sections.)

NOTE-
Bolt holes in sign panels
shall be located as shown
in "Standard Highway Signs".

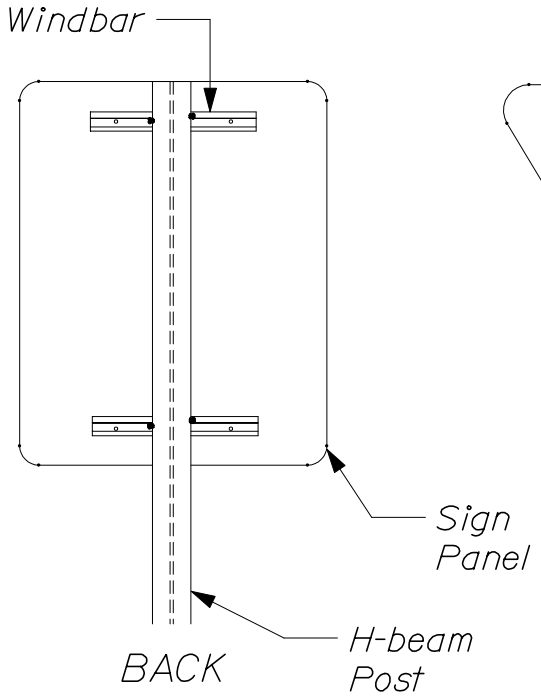

BACK

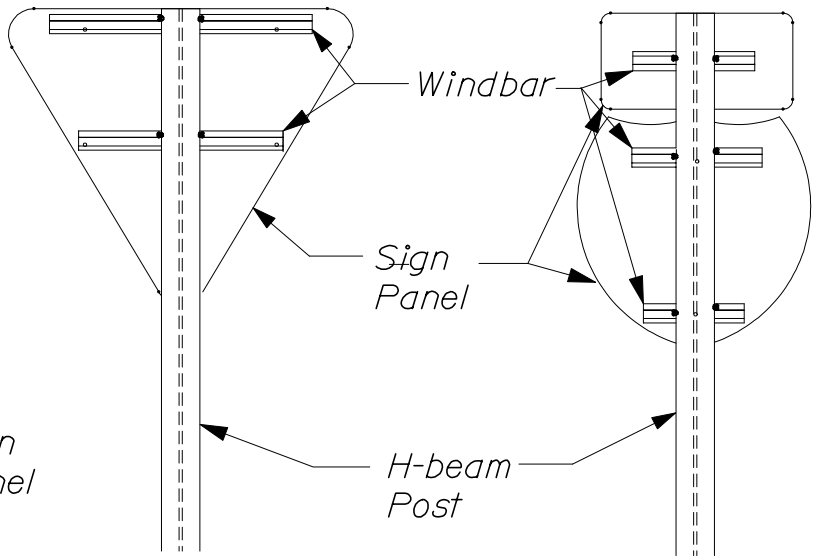

BACK

BACK

ATTACHMENT OF SIGNS,
REGULATORY, WARNING, AND ROUTE
MARKER ASSEMBLY SIGNS, TYPE I
TO H-BEAM POSTS
ITEM NO. 645.271

HIGHWAY SIGNING

645(04)

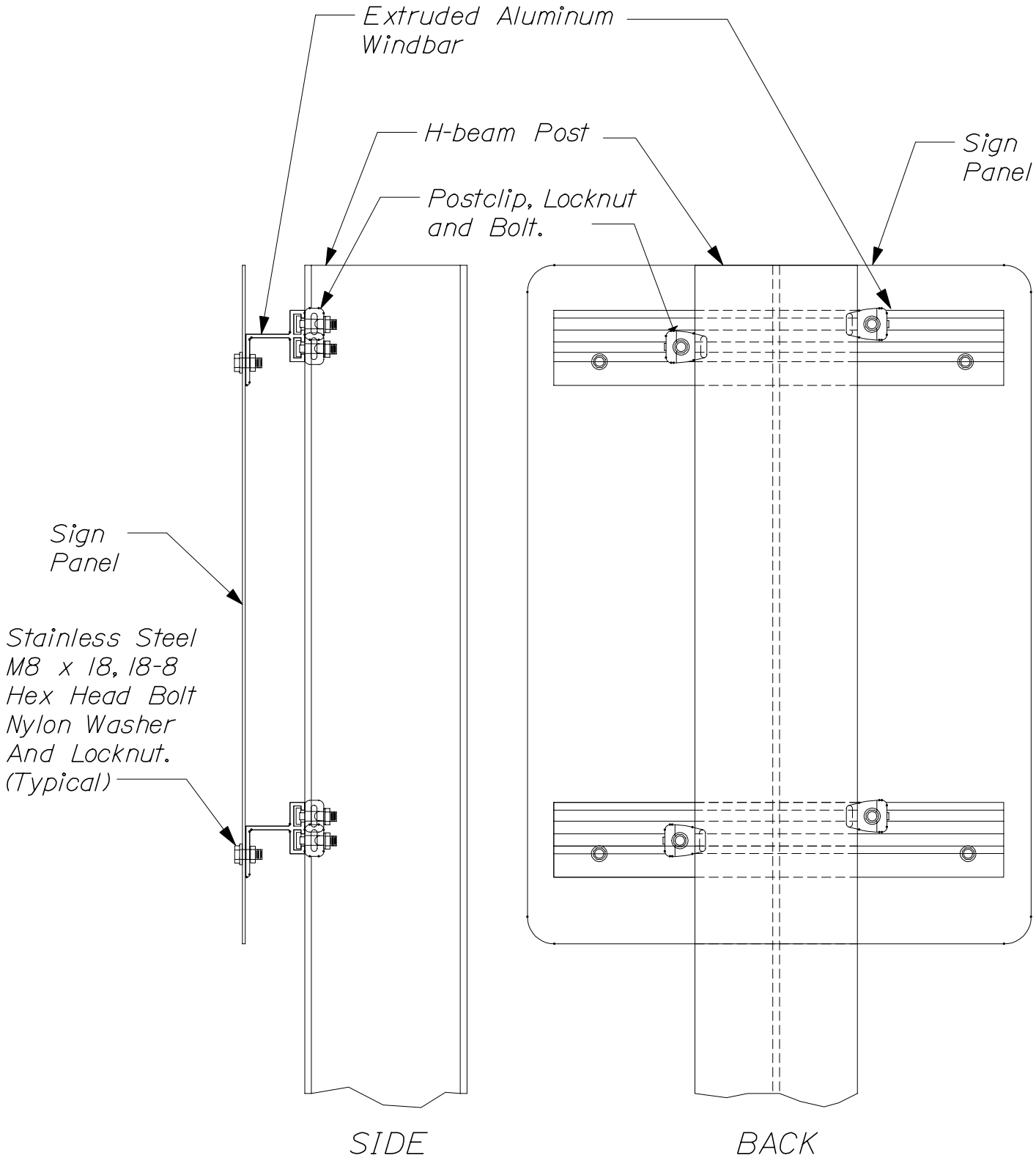

ATTACHMENT OF SIGNS, REGULATORY, WARNING, AND ROUTE MARKER ASSEMBLY SIGNS, TYPE I TO H-BEAM POSTS
ITEM NO. 645.271

HIGHWAY SIGNING

645(05)

STANDARD H-BEAM POSTS for TYPE I SIGNS

Foundation Size	Sign Area (A)	Sign Width (W)	Post Size	Base Plate (1), (3)	Material	Anchor Bolts (2)	Bolt Circle	Maximum Mounting Height
SINGLE SUPPORT SIGNS								
	$0 - 1m^2$	Use Wood Posts			A709 Grade 250			4m to Center of Sign
450	$1 < A \leq 1.5m^2$	W = 1 200 Max. But includes 1 500 Yield Sign	W150X14	300X300X25 18kg		24M X 900'	300	
450	$1.5 < A \leq 2.3m^2$	W = 1 500 Max.	W150X22	300X300X25 18kg		24M X 900	300	
600	$2.3 < A \leq 3.9m^2$	W = 2 100 Max.	W200X36	350X350X25 25kg		30M X 1 050	350	
MULTIPLE SUPPORT SIGNS								
600	To $5.5m^2$/Post	Varible	W200X27	350X350X25 25kg	A709 Grade 250	30M X 1 050	350	6m to Center of Sign
600	$5.5 - 7.9m^2$/Post		W250X33	300X430X32 33kg		30M X 1 050	375	
750	$7.9 - 10.2m^2$/Post		W300X39	330X480X32 40kg		36M X 1 200	425	
750	$10.2 - 12.5m^2$/Post		W350X44	350X530X32 47kg		36M X 1 200	475	

NOTES-

(1) Bolts to be 50,000 PSI minimum yield strength.
(2) Post to base plate weld shall be fillet weld.
(3) Base plates and H-Beams shall be hot dipped galvanized after fabrication in accordance with section 7.20.06.
(4) Payment for the weight of base plate shall be incidental to ITEM NO. 645.289.
(5) Posts to be equipped with breakaway devices shall have holes drilled or punched before galvanizing.
Posts equipped with breakaway devices shall have the post size die stamped, before galvanizing, near the bottom end of beam.
(6) W - Shapes utilized with Breakaway Devices shall be in strict conformance with ASTM A6, Table 16, A, Depth.

ANCHOR BOLT LAYOUT

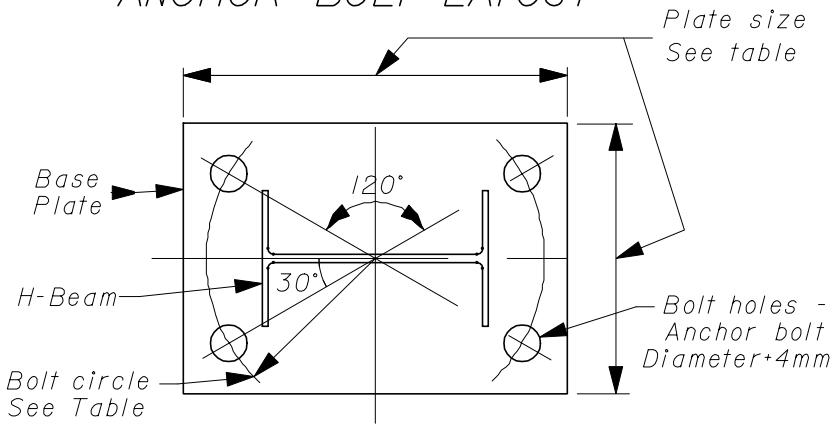

W250X33, W300X39, W350X44

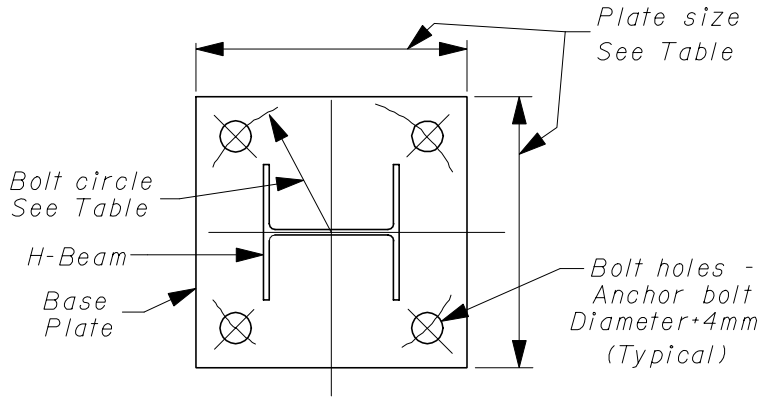

W150X14, W150X22, W200X27, W200X36

H-BEAM POSTS
HIGHWAY SIGNING

645(06)

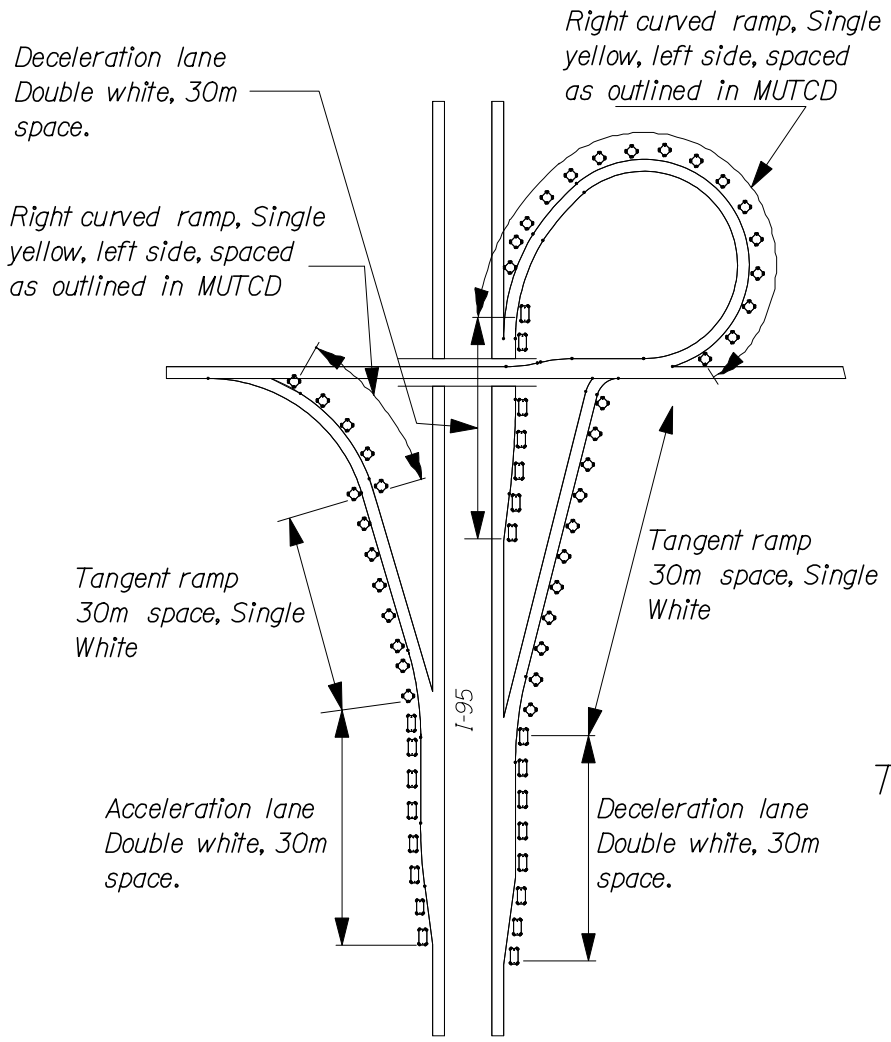

NOTE-
Locations of Delineators shall be 80.4672m (264 ft), 20/mile on mainline, subject to approval of the Resident. Delineators on ramps shall be placed as shown above and in the MUTCD.
When placing delineators in the area of any Highway Lighting, the contractor shall contact MDOT Electrical Foreman, at 287-2818, to determine locations of conduit.

TYPICAL PLACEMENT OF DELINEATORS AT INTERCHANGES

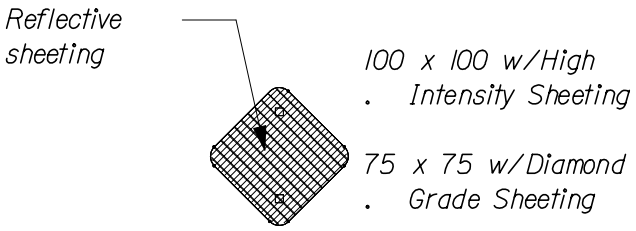

SINGLE DELINEATOR

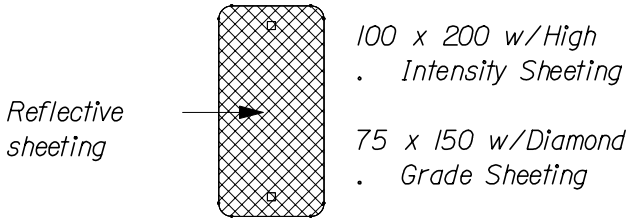

DOUBLE DELINEATOR

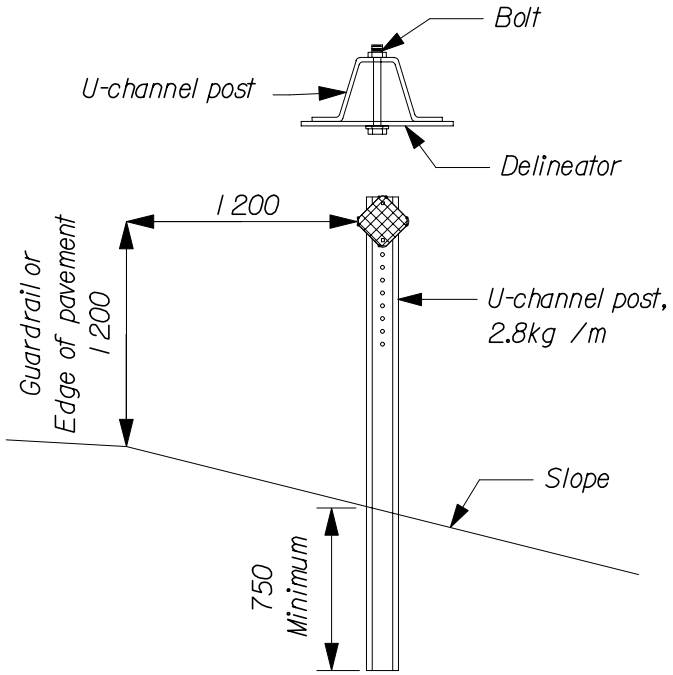

DELINEATORS

ITEM NO. 645.301
ITEM NO. 645.302

DELINEATORS
HIGHWAY SIGNING

645(07)

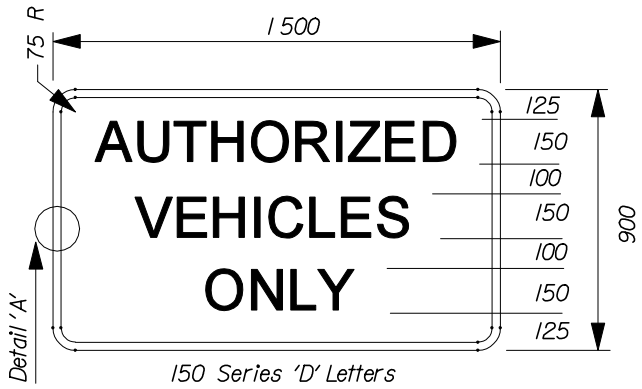

White Background
Black Letters and
Legend

AVO

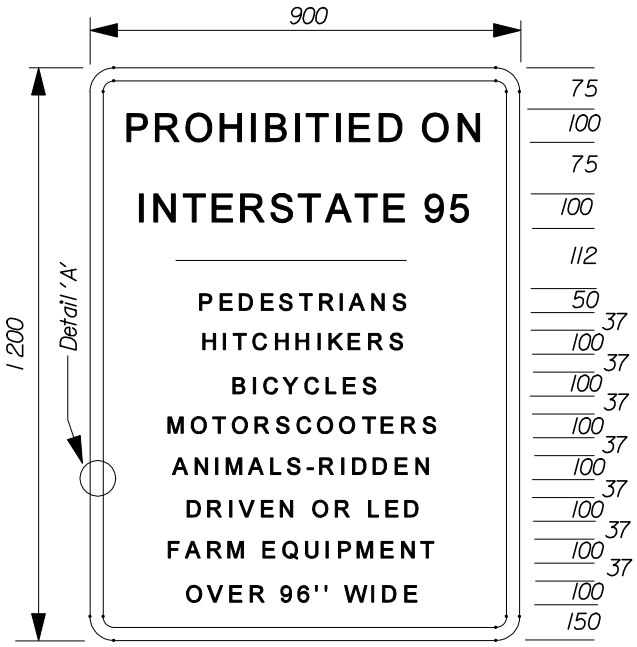

White Background
Black Letters and
Legend

Figure
51

Borders

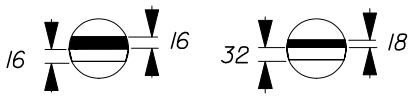

Detail B Detail A

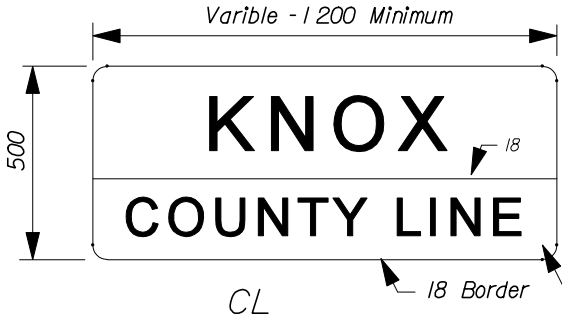

CL
COUNTY LINE SIGN

Green Background
White Border and Legend

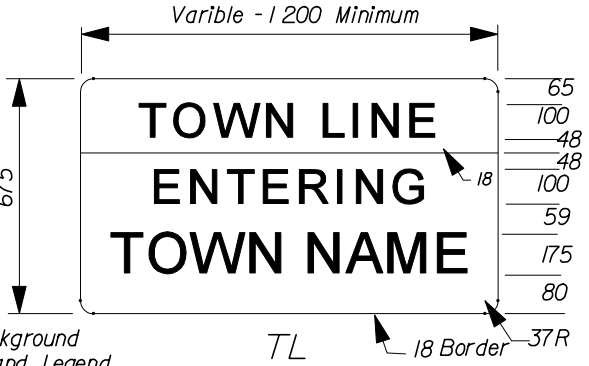

TL
TOWNLINE SIGN

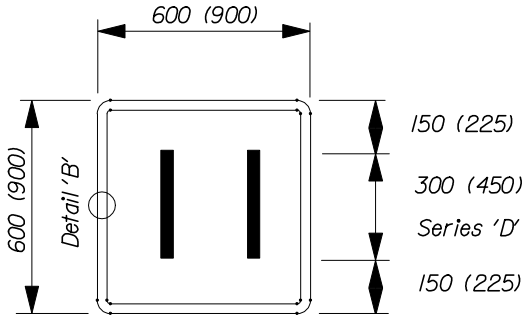

MI-5

600 X 750 For 3 Digit Rte Number
900 X 1125 For 3 Digit Rte Number
When Using MI-5 on Guide Signs
Omit the Border.
White Background, Black Legend
and Border.

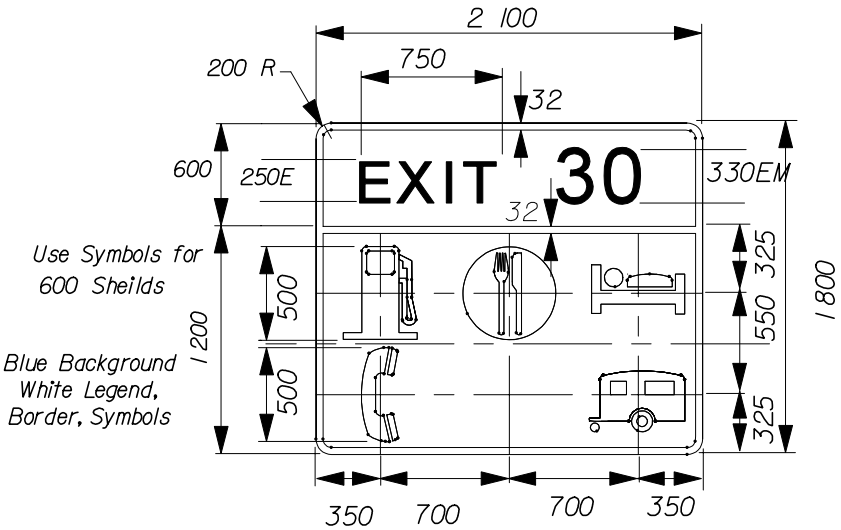

Services Sign
For Interstate

STATE OF MAINE SIGNS
HIGHWAY SIGNING

645(08)

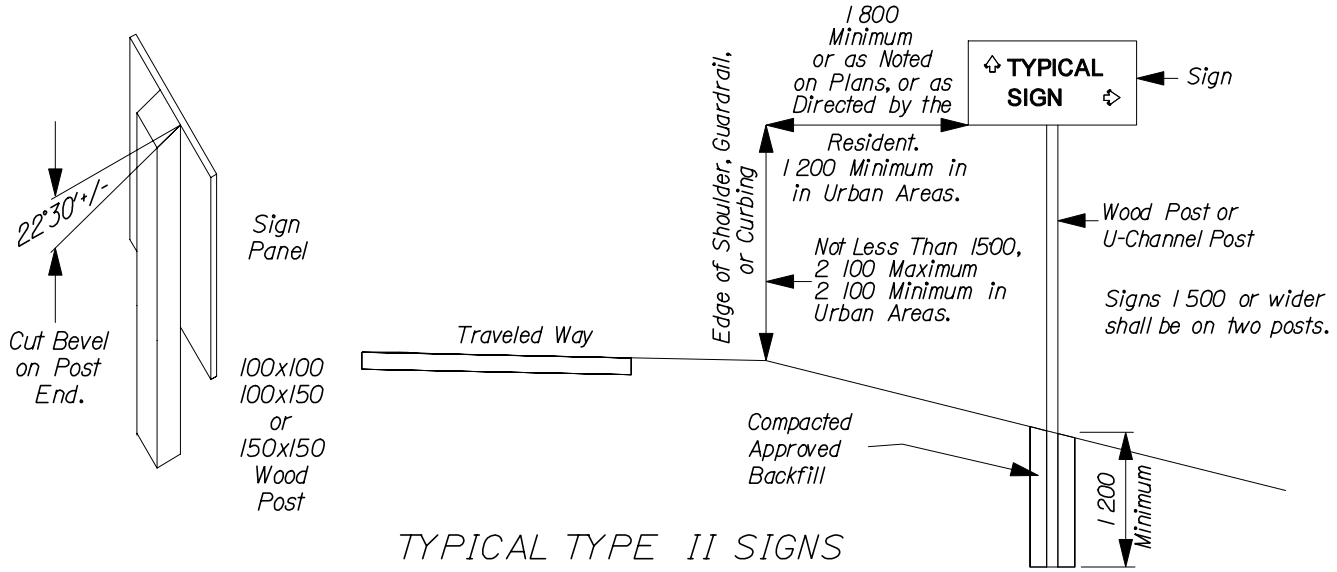

TYPICAL TYPE II SIGNS

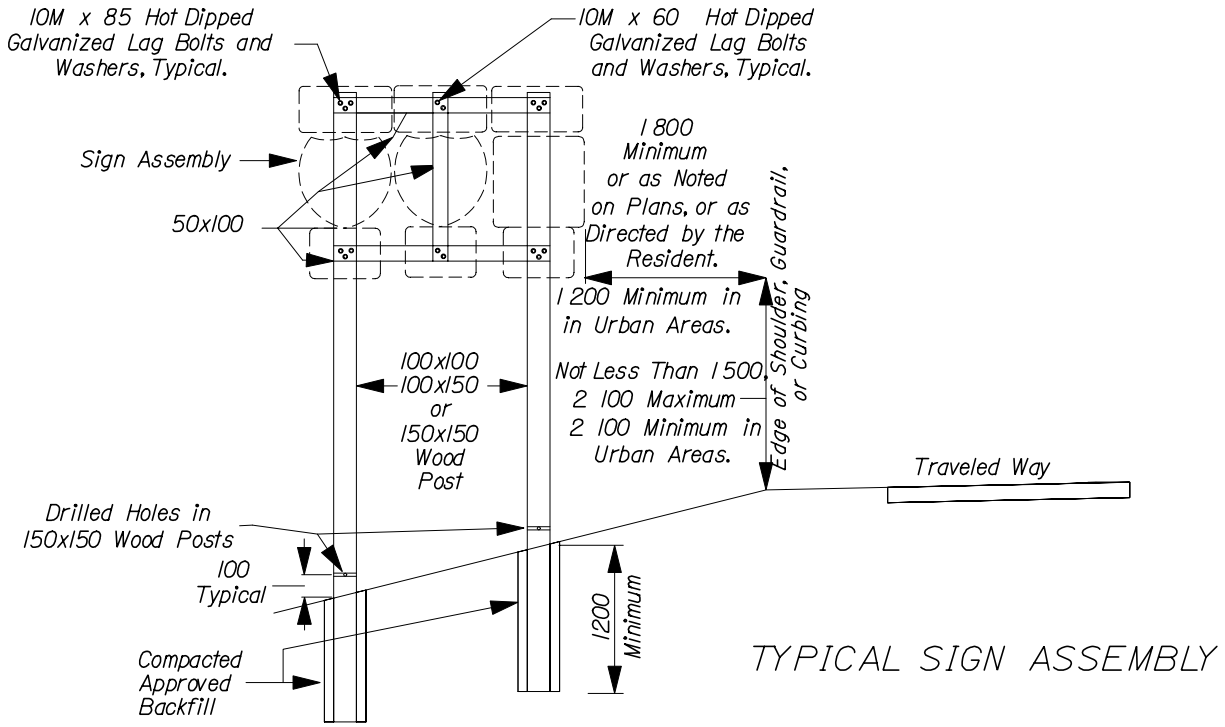

TYPICAL SIGN ASSEMBLY

NOTES:
Refer to Section 645.061 of the Standard Specifications to determine the size of wood posts. All wood posts and brackets shall be pressure treated to CCA 40.
On 150x150 wood posts only, drill 18mm diameter holes at right angles to one another 100mm above ground level. to meet breakaway standards.

ITEM NO. 645.291
ITEM NO. 645.292

INSTALLATION OF TYPE II SIGNS
HIGHWAY SIGNING

645(09)

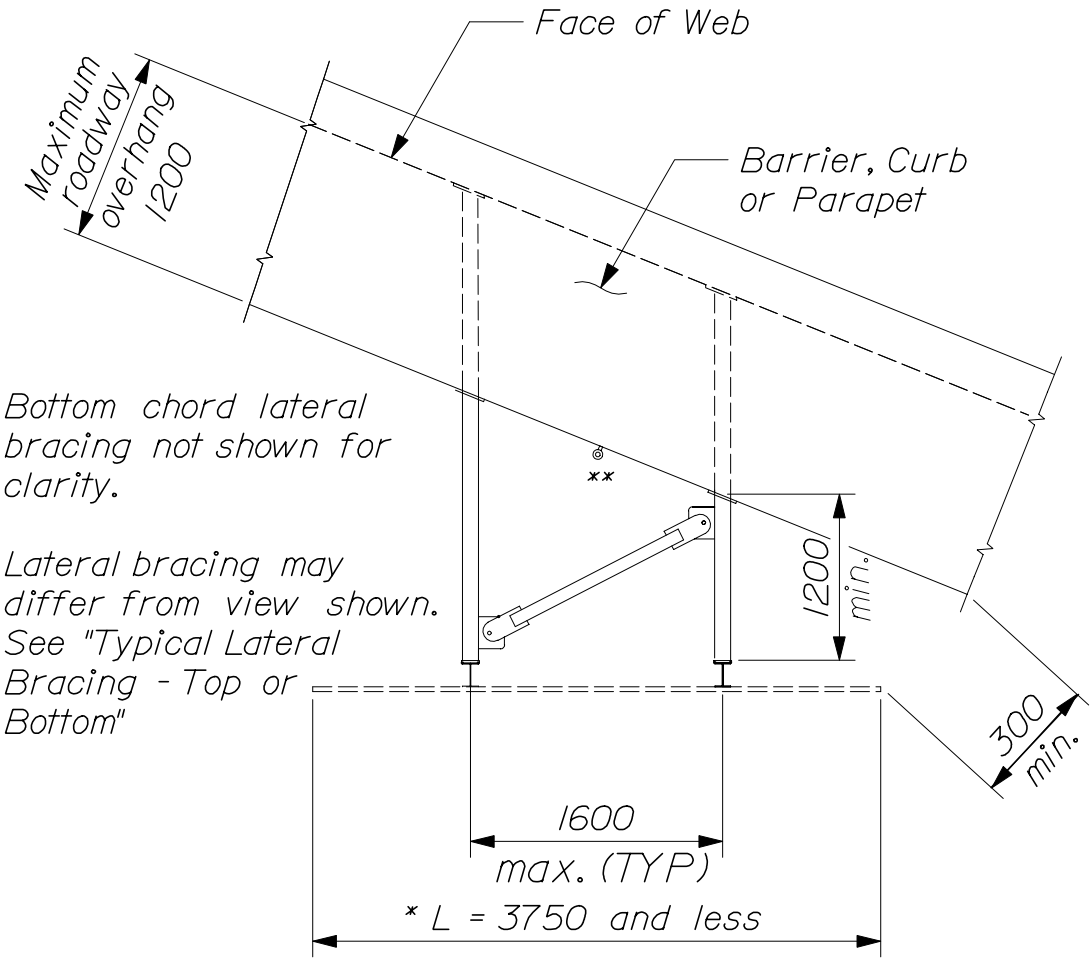

PLAN - SMALL SIGN PANEL SUPPORT LAYOUT

Max. skew permitted: 50 degrees
Max. height of sign permitted: 4250

* Note: L = Width of sign

** Anchoring eyelet for barriers only
(See Anchorage Eyelet Detail)

HIGHWAY SIGNING
OVERPASS MOUNTED SIGN SUPPORT

645(10)

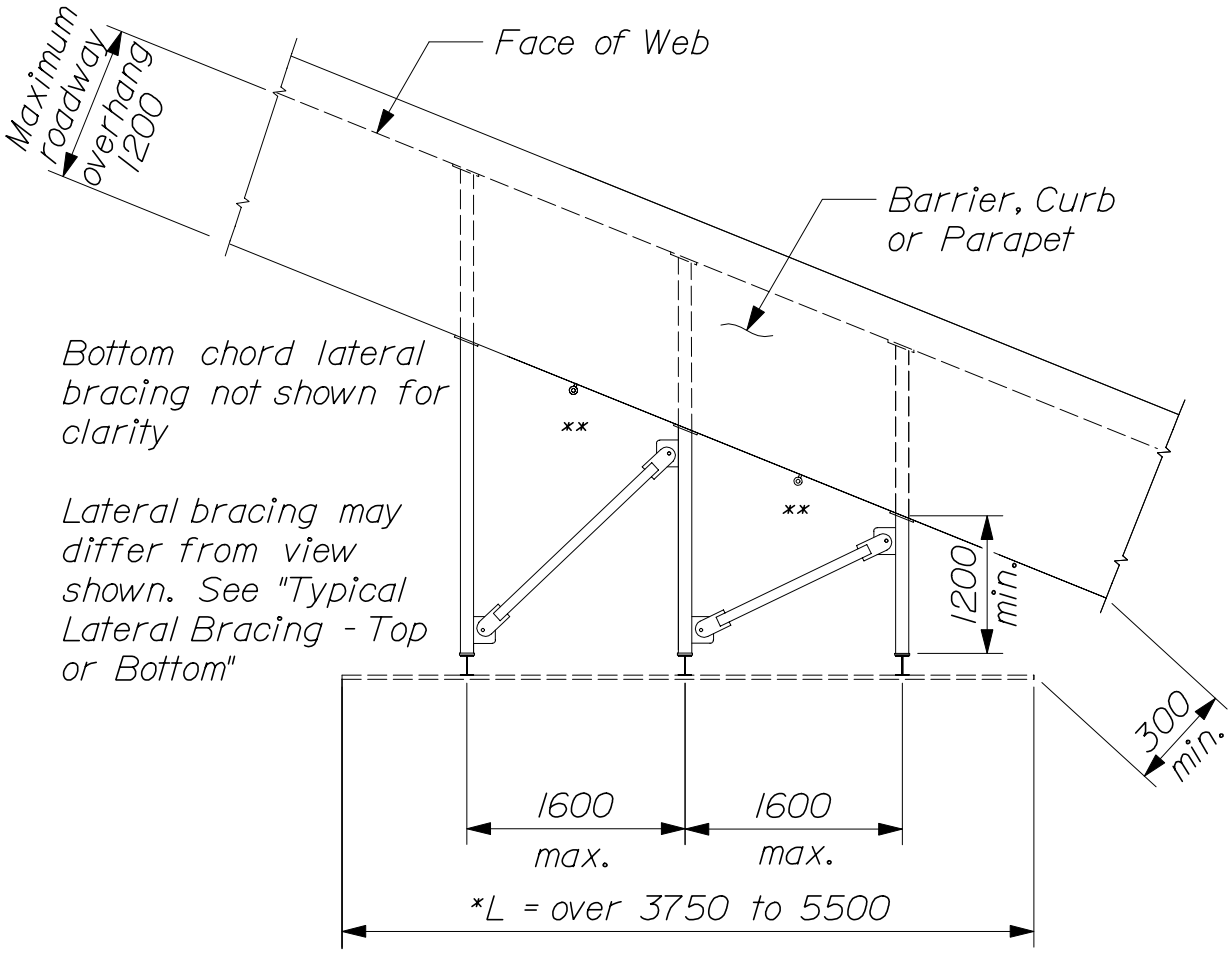

PLAN - MEDIUM SIGN PANEL SUPPORT LAYOUT

Max. skew permitted: 30 degrees
Max. height of sign permitted: 4250

* Note: L = width of sign

** Anchoring eyelet for barriers only.
(See Anchorage Eyelet Detail)

HIGHWAY SIGNING
OVERPASS MOUNTED SIGN SUPPORT

645(11)

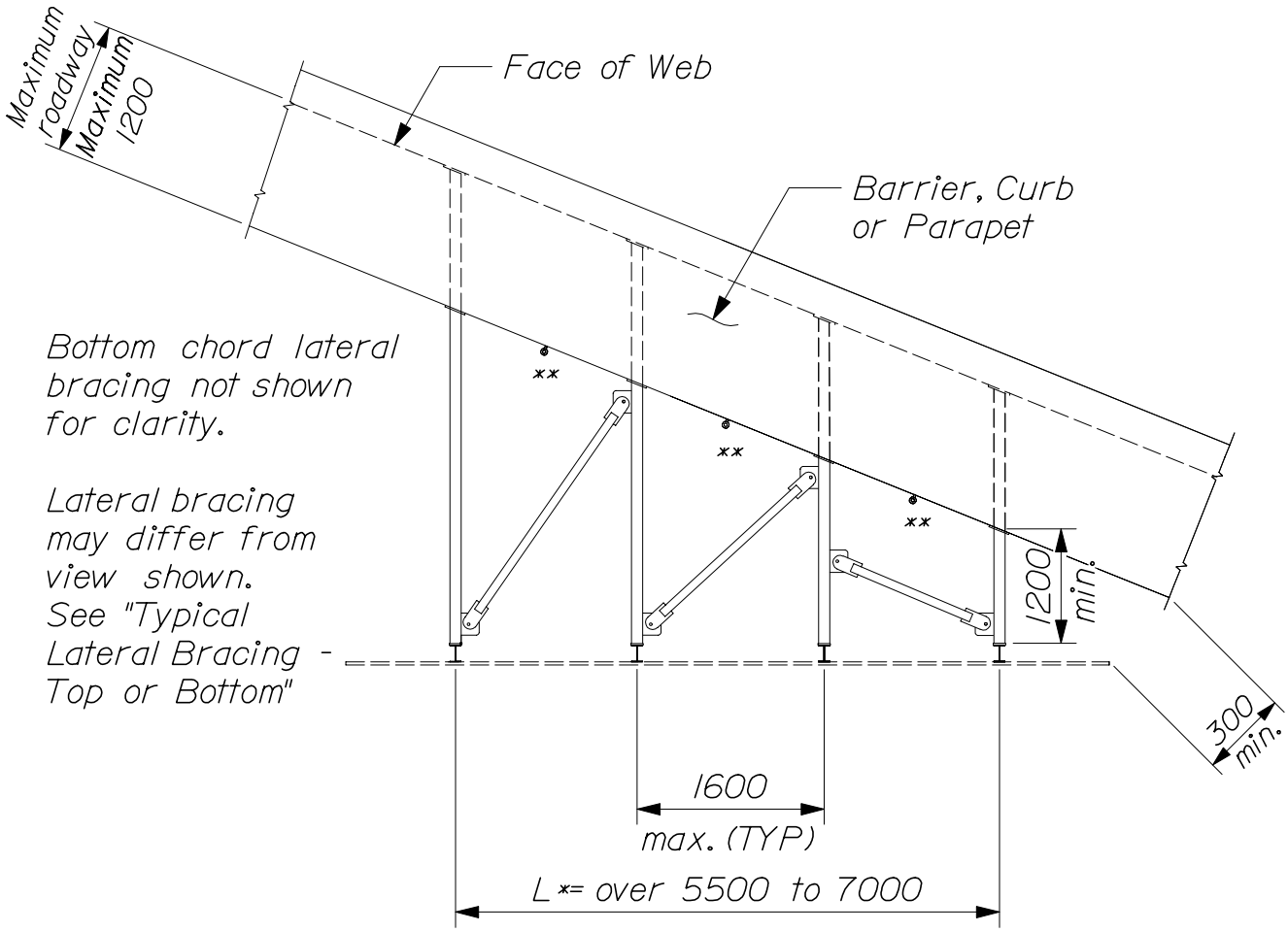

PLAN - LARGE SIGN PANEL SUPPORT LAYOUT

Max. skew permitted: 30 degrees
Max. height of sign permitted: 4250

* Note: L = Width of sign

** Anchoring eyelet for barriers only.
(See Anchorage Eyelet Detail)

HIGHWAY SIGNING
OVERPASS MOUNTED SIGN SUPPORT

645(12)

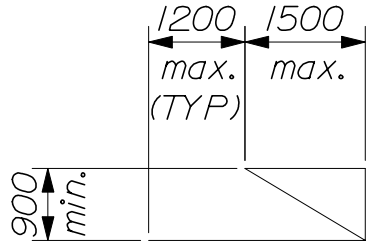

Single Panel

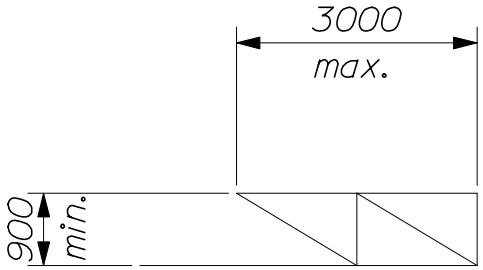

Two equal Panels

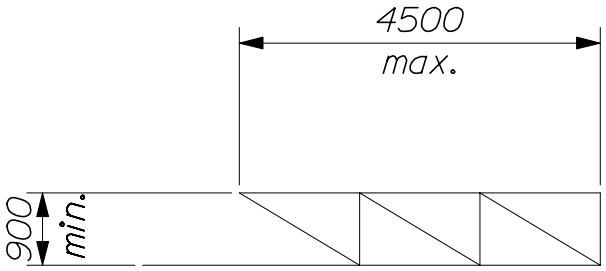

Three equal Panels

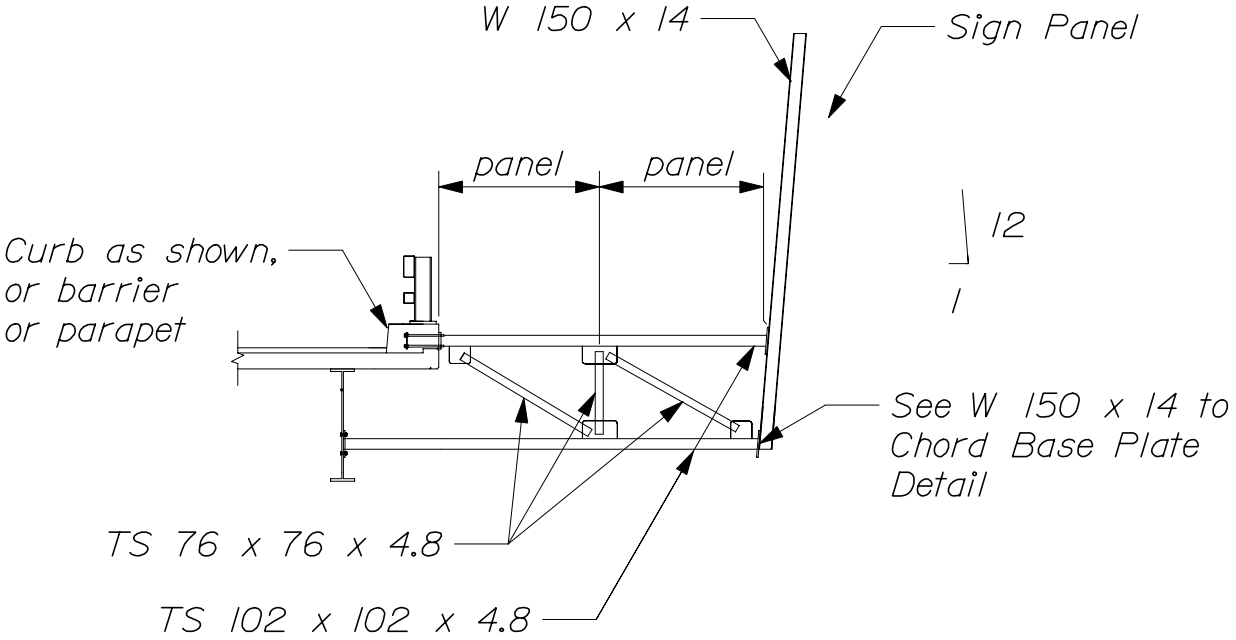

TYPICAL ELEVATION - VERTICAL BRACING

HIGHWAY SIGNING
OVERPASS MOUNTED SIGN SUPPORT

645(13)

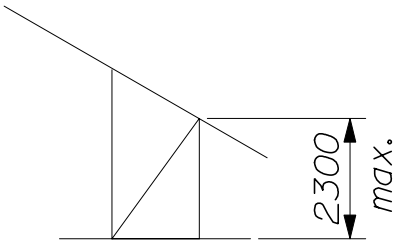

PLAN VIEW
2 - BRACKET

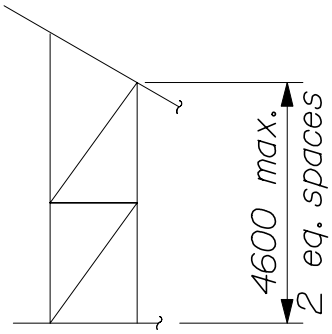

PLAN VIEW
2 - BRACKET

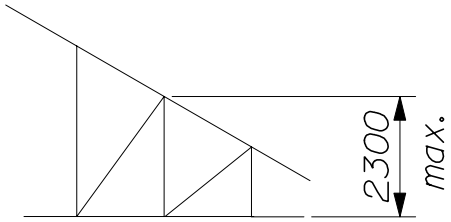

PLAN VIEW
3 - BRACKET

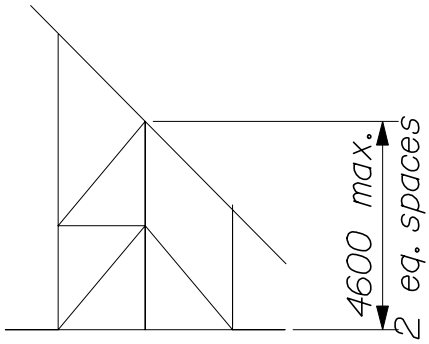

PLAN VIEW
3 - BRACKET

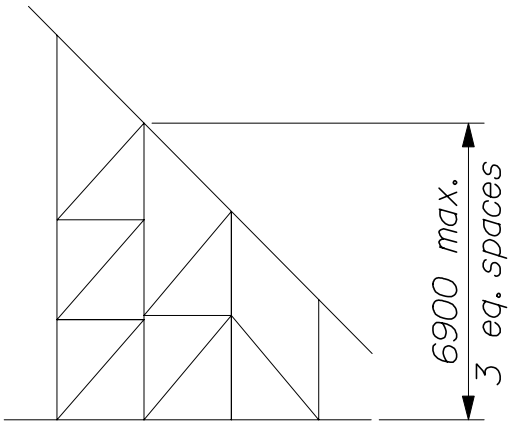

PLAN VIEW
4 - BRACKET

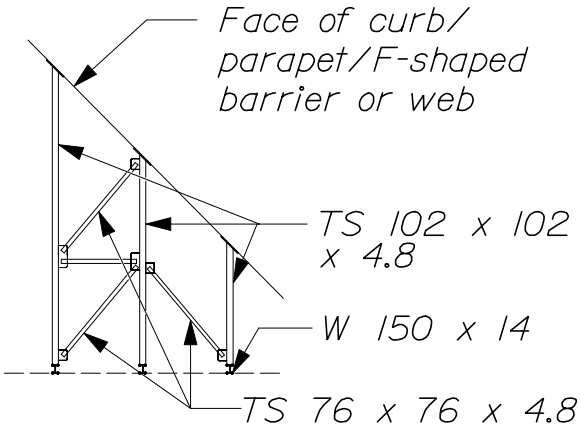

TYPICAL LATERAL
BRACING

TYPICAL LATERAL BRACING
TOP OR BOTTOM

HIGHWAY SIGNING
OVERPASS MOUNTED SIGN SUPPORT

645(14)

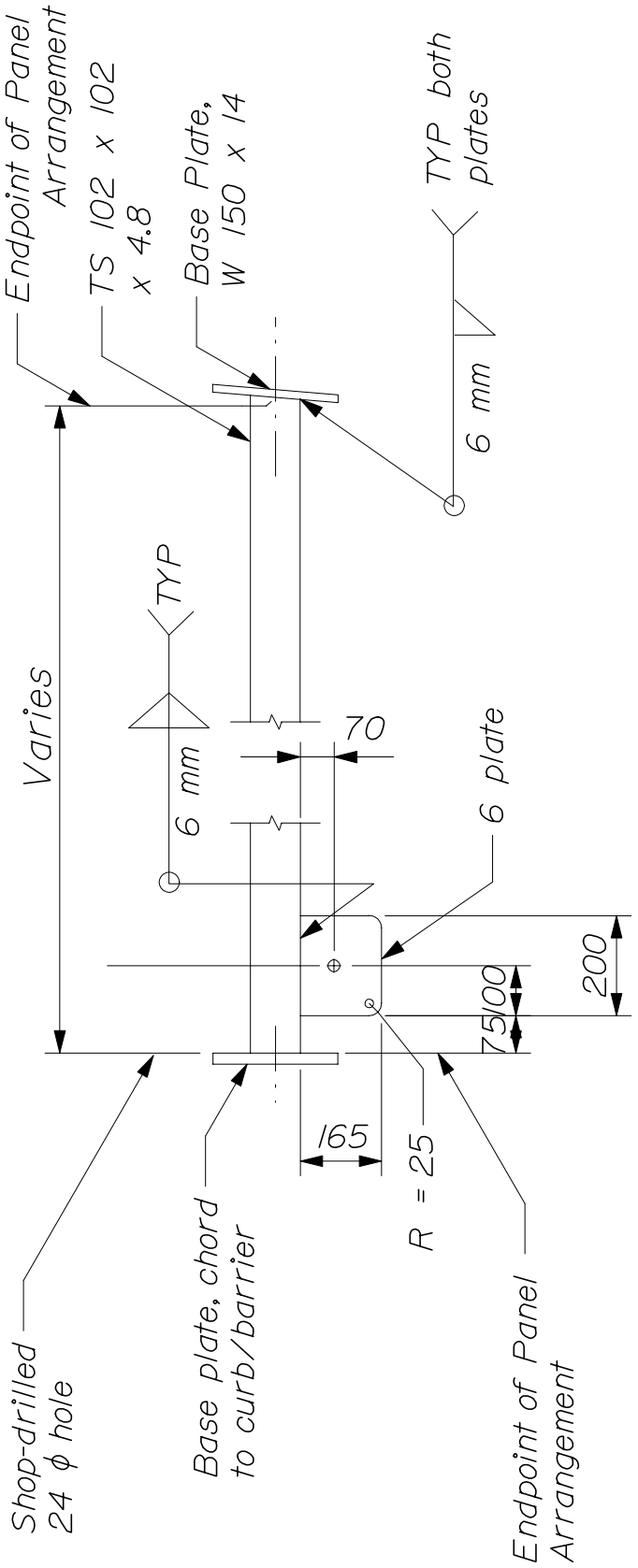

TYPICAL TOP CHORD

HIGHWAY SIGNING
OVERPASS MOUNTED SIGN SUPPORT

645(15)

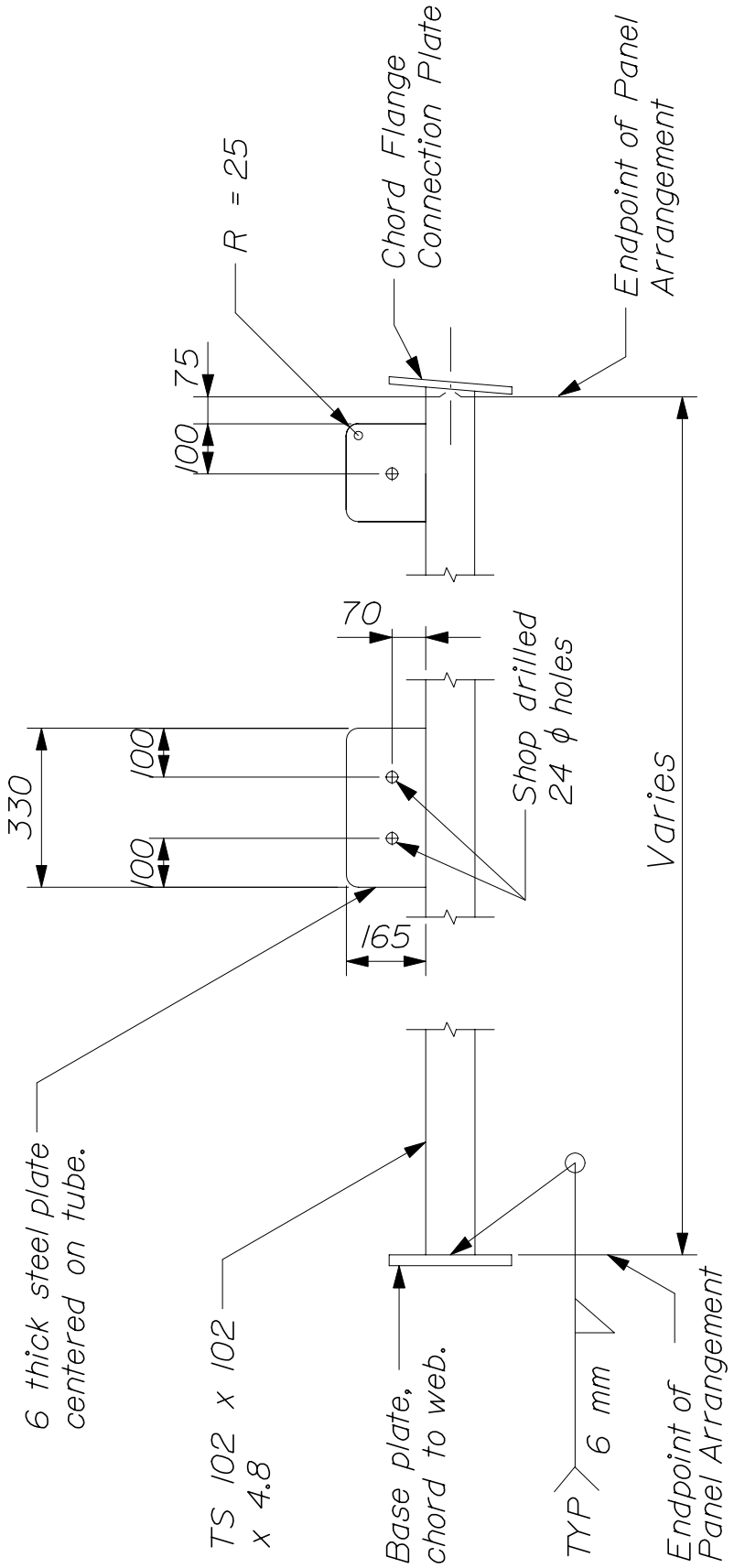

TYPICAL BOTTOM CHORD

HIGHWAY SIGNING
OVERPASS MOUNTED SIGN SUPPORT

645(16)

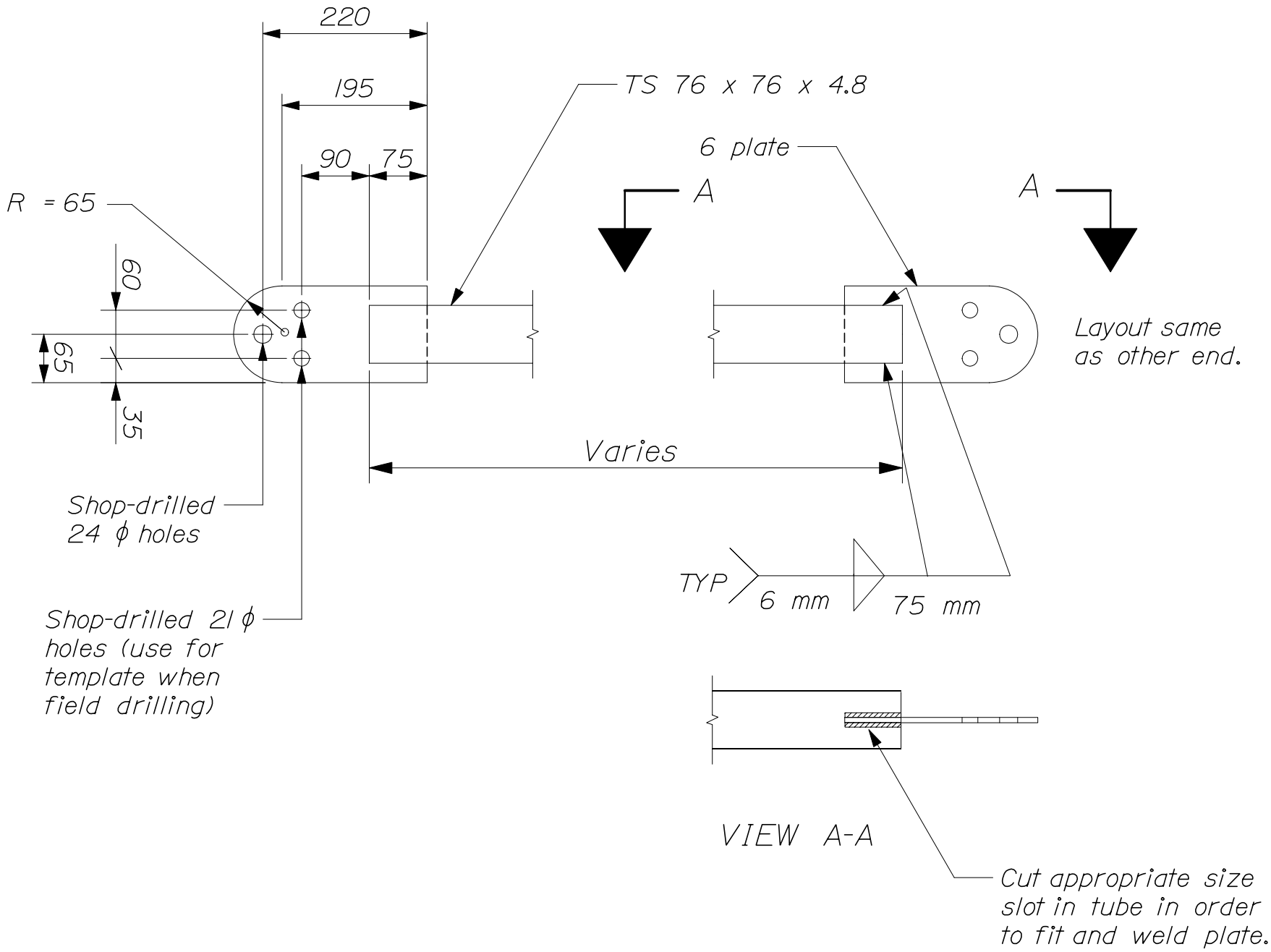

TYPICAL LATERAL AND VERTICAL BRACE

HIGHWAY SIGNING
OVERPASS MOUNTED SIGN SUPPORT
645(17)

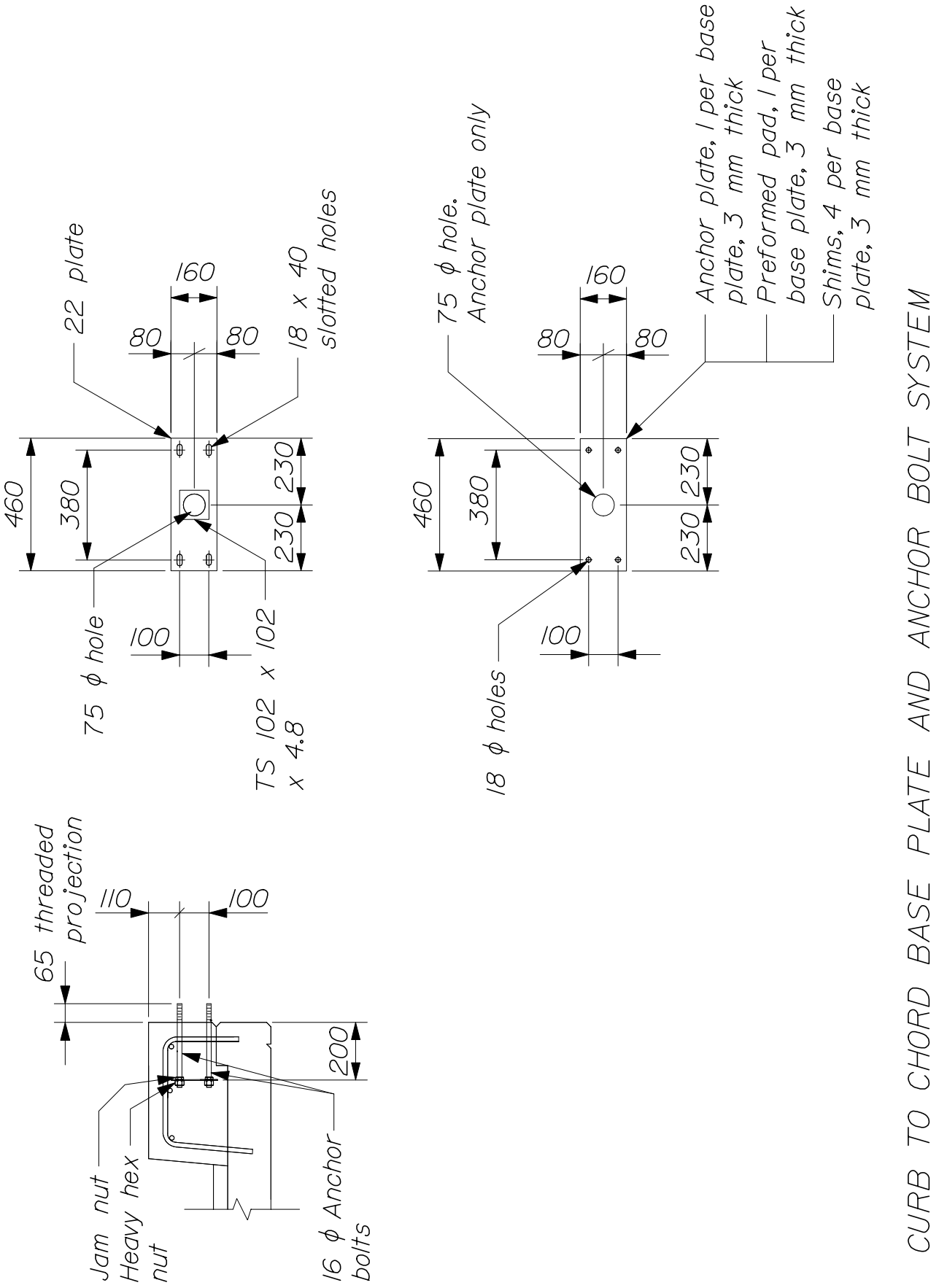

HIGHWAY SIGNING
OVERPASS MOUNTED SIGN SUPPORT

645(18)

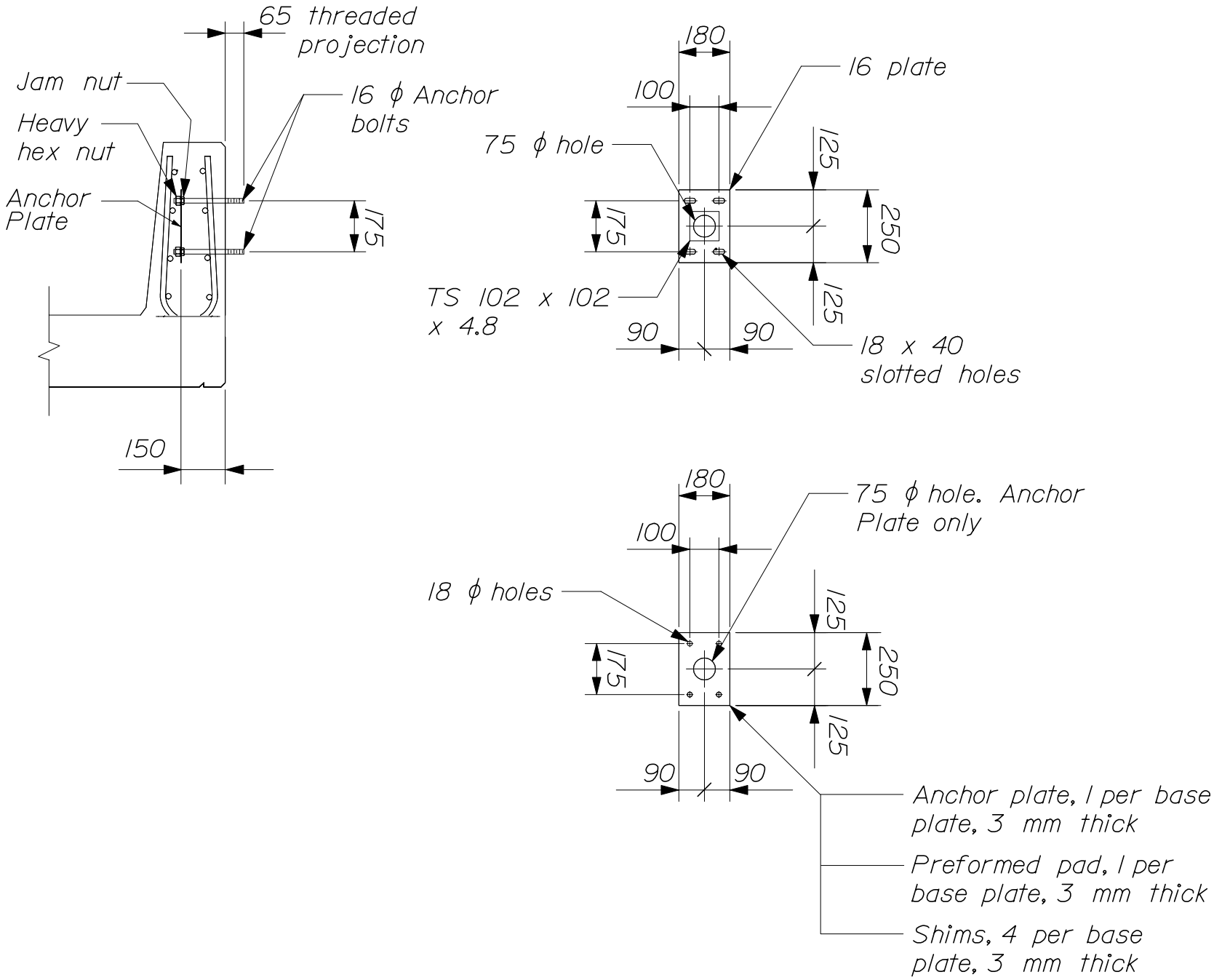

BARRIER/STEEL BEAM TO CHORD BASE PLATE AND ANCHOR BOLT SYSTEM

HIGHWAY SIGNING

OVERPASS MOUNTED SIGN SUPPORT

645(19)

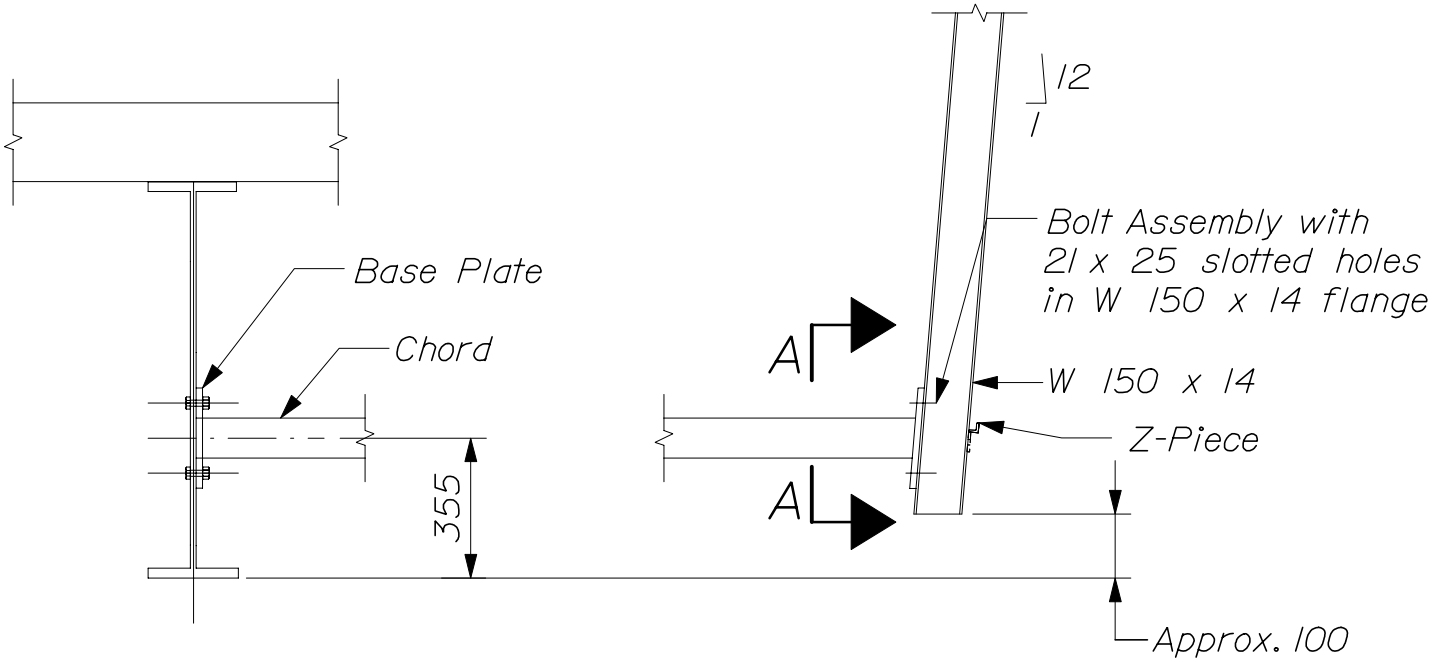

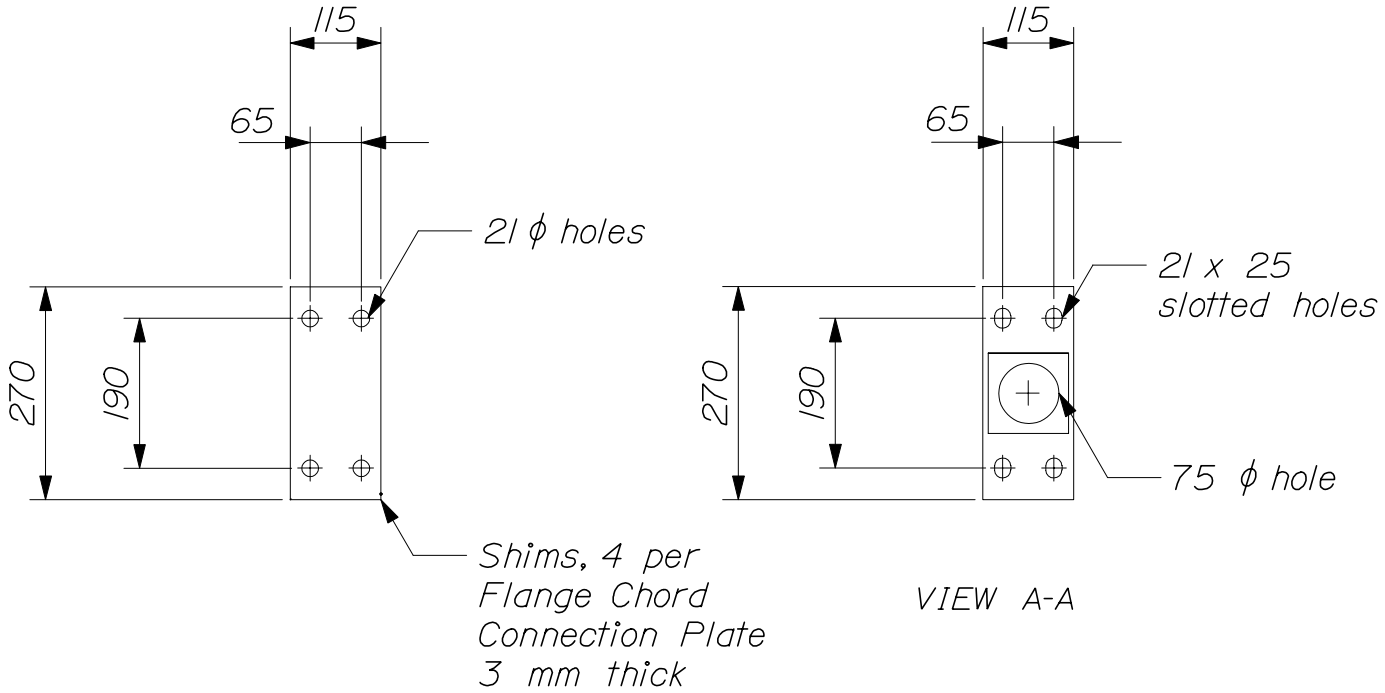

HIGHWAY SIGNING
OVERPASS MOUNTED SIGN SUPPORT

645(20)

* Anchorage Eyelet shall be attached so that it is capable of supporting a dead weight load of 2400 kN (5400 lbs.).

Anchorage Eyelet shall be galvanized to the requirments of ASTM A153 or shall be Stainless Steel.

a. Block-out opening is 150 high by 150 wide.

b. Drill hole for eyelet shank 6 mm larger than shank diameter and fill void with grout selected from MDOT Prequalified List of Anchoring Material

c. Following installation of eyelet hardware, patch block-out with an MDOT approved patching material that matches the barrier concrete.

d. Nuts shall meet the requirements of ASTM A563.

e. Washers shall meet the requirements of ASTM F436.

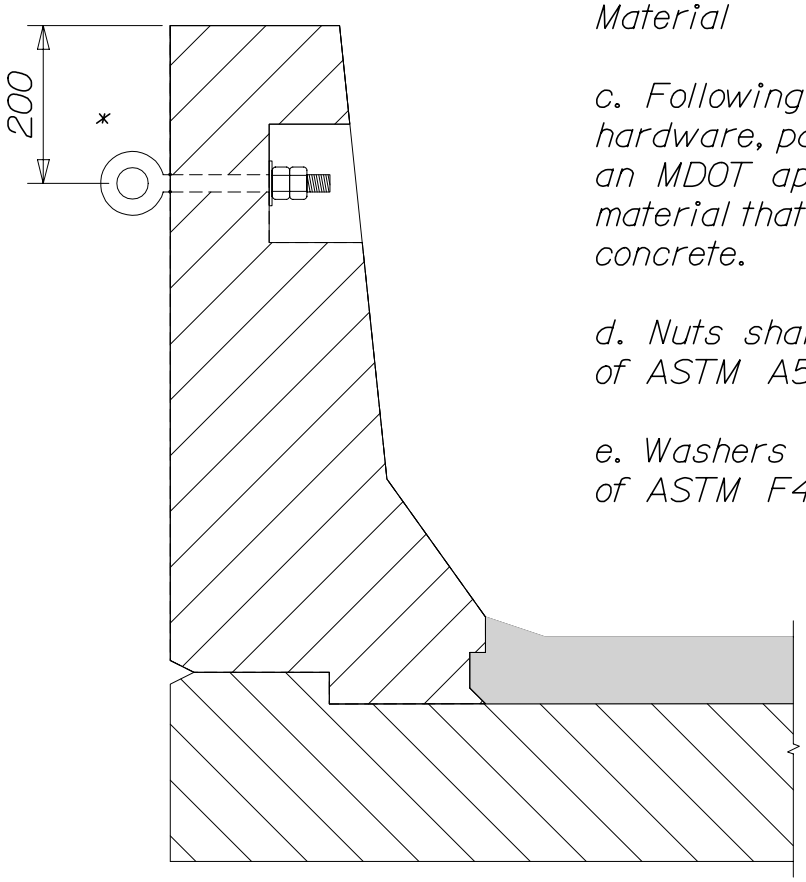

ANCHORAGE EYELET DETAIL

HIGHWAY SIGNING
OVERPASS MOUNTED SIGN SUPPORT

645(21)

NOTES:

1. The support frame dimensions shall be determined by the Contractor. These shall be based on the sign size, bridge skew angle, and cross-sectional geometry. Field verification of these parameters is the responsibility of the Contractor. The Contractor shall consider the possibility of interferences such as splice plates, drains, stiffeners, etc. in developing the shop drawings.

2. The Contractor shall select an appropriate layout using the views in these Standards as a guide in order to determine the number of brackets, the configuration of the vertical bracing and the configuration of the lateral bracing.

3. The support frame is designed such that the Contractor may fasten chords, vertical and horizontal bracing using a single bolt per connection in an over-sized hole for erection purposes. When the frame is in final desired position, adjustments may be accomplished and remaining bolt holes may be drilled in the field using the connected components as a template.

4. The Contractor shall select an appropriate chord base plate for attaching to a concrete barrier, curb or parapet, using the views in these Standards as a guide. An accommodating anchor bolt system shall be selected from this Standard.

5. All work and materials shall conform to the applicable provisions of Section 504, Structural Steel, of the Standard Specification Highways and Bridges.

6. All Steel components shall be galvanized after fabrication in accordance with ASTM A123, except that hardware used in the connections of the structural frame shall meet the requirements of either ASTM A153 or ASTM B695, Class 50, Type I. Parts except hardware shall be blast-cleaned prior to galvanizing in accordance with SSPC-SP6.

7. Materials:

   Hollow steel sections shall meet the requirements of ASTM A500, Grade B.

   Steel plate shall meet the requirements of AASHTO M223M/M223, Grade 345/50 (ASTM A572/A572M, Grade 50/345). Steel shapes shall meet the requirements of ASTM A992/A992M.

   Steel shim plates shall meet the requirements of ASTM A36/A36M.

HIGHWAY SIGNING
OVERPASS MOUNTED SIGN SUPPORT

645(22)

Bolting assemblies used in the connections of the structural frame shall be Heavy Hex Head M20 (3/4 ") and meet the requirements of ASTM A325M (ASTM A325). The Contractor shall select appropriate bolt lengths.

Anchor bolt assemlies used to fasten the structural frame to a concrete curb, barrier or parapet shall meet the requirements of ASTM A449, Type I with a minimum yield strength of 380 MPA (55 KSI).

Remaining materials used shall be as specified elsewhere in these Standards or in the Contract Documents.

8. Fastener nuts in anchor and bolt assemblies shall be tightened to a snug fit and given an extra 1/8 turn. Fastener assemblies in oversized holes shall have washers under bolt heads and nuts.

9. Holes that are field drilled shall be coated with an approved zinc-rich primer prior to final erection.

10. A random 25% of all base plate to chord welds and chord to Flange Connection Plate welds shall be MT inspected. Only a one-time repair is allowed on these welds without written permission of the Engineer. All other welds shall be subject to VT inspection.

11. Anchor bolts shall be installed with misalignments of less than 1:40 from theoretical location.

12. An anchorage eyelet shall be installed approximately midpoint between each bracket when a concrete barrier is utilized as the top chord attachment.

13. Preformed pads, specified in Section 713, Structural Steel and Related Material, of the Standard Specifications Highways and Bridges, shall be placed between each chord base plate and concrete surface.

14. The Contractor may use shim plates, as provided by this Standard, beneath all base plates and Flange Connection Plates as necessary, up to an adjustment of 12 mm.

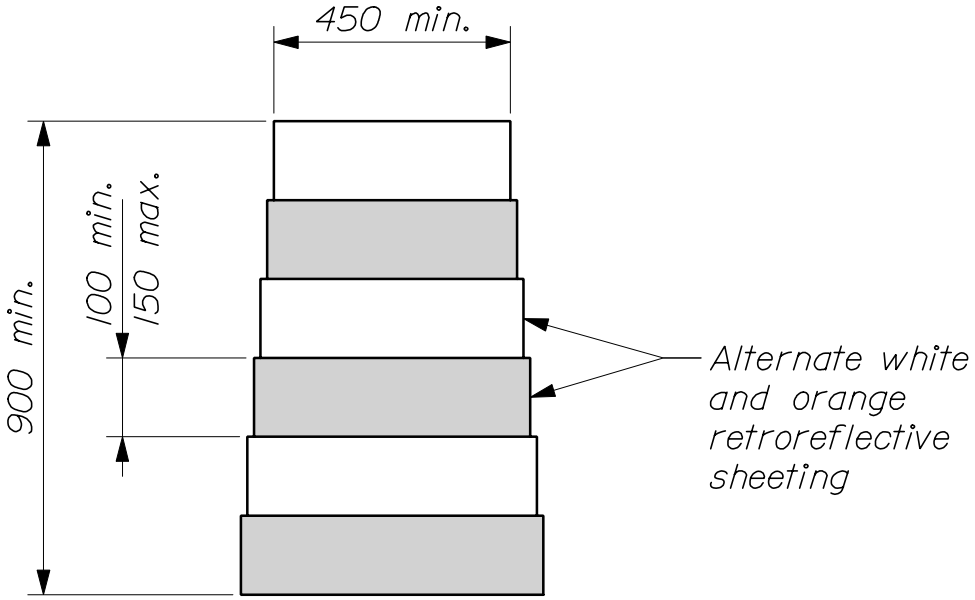

-- DRUM TYPE "B" --
(Non - metal)

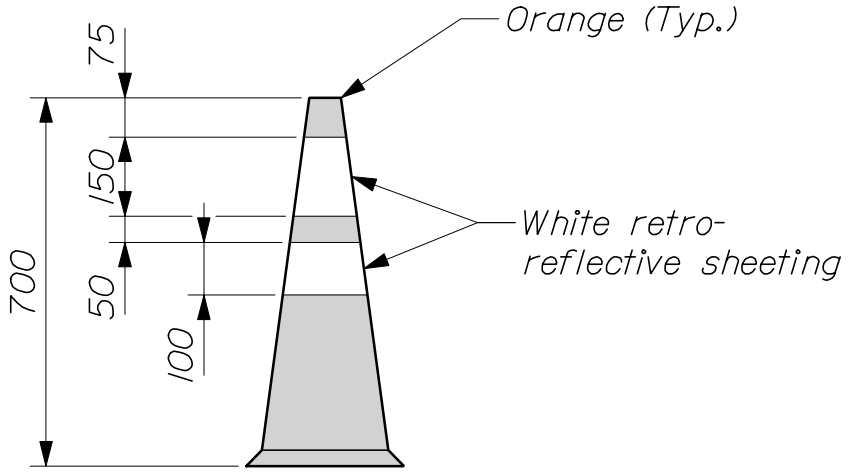

-- CONE TYPE "A" --
(Standard)

# CHANNELIZING DEVICES
652(01)

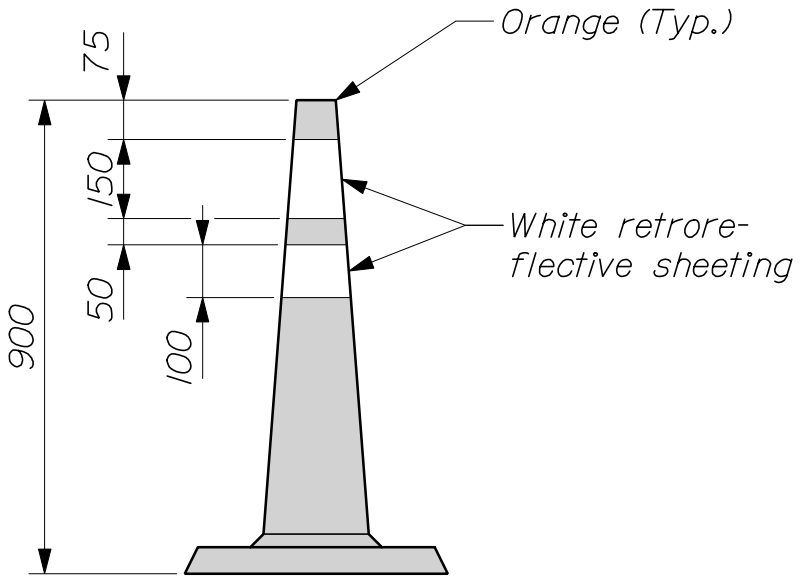

-- CONE TYPE "B" --
(High Ballasted)

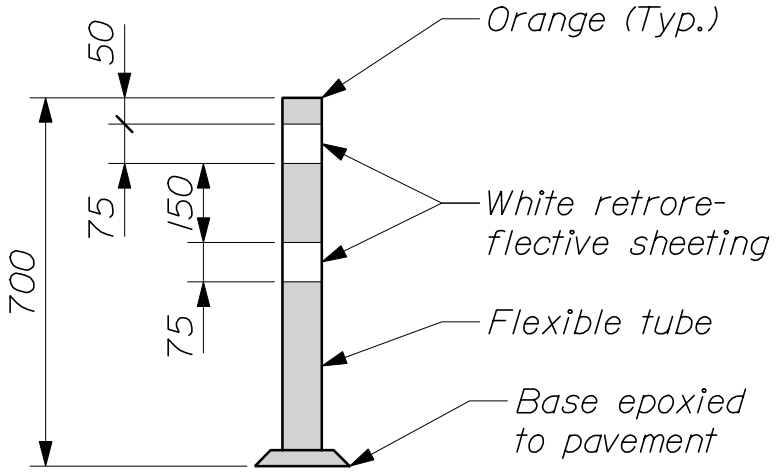

-- CONE TYPE "C" --
(Flexible)

# CHANNELIZING DEVICES
652(02)

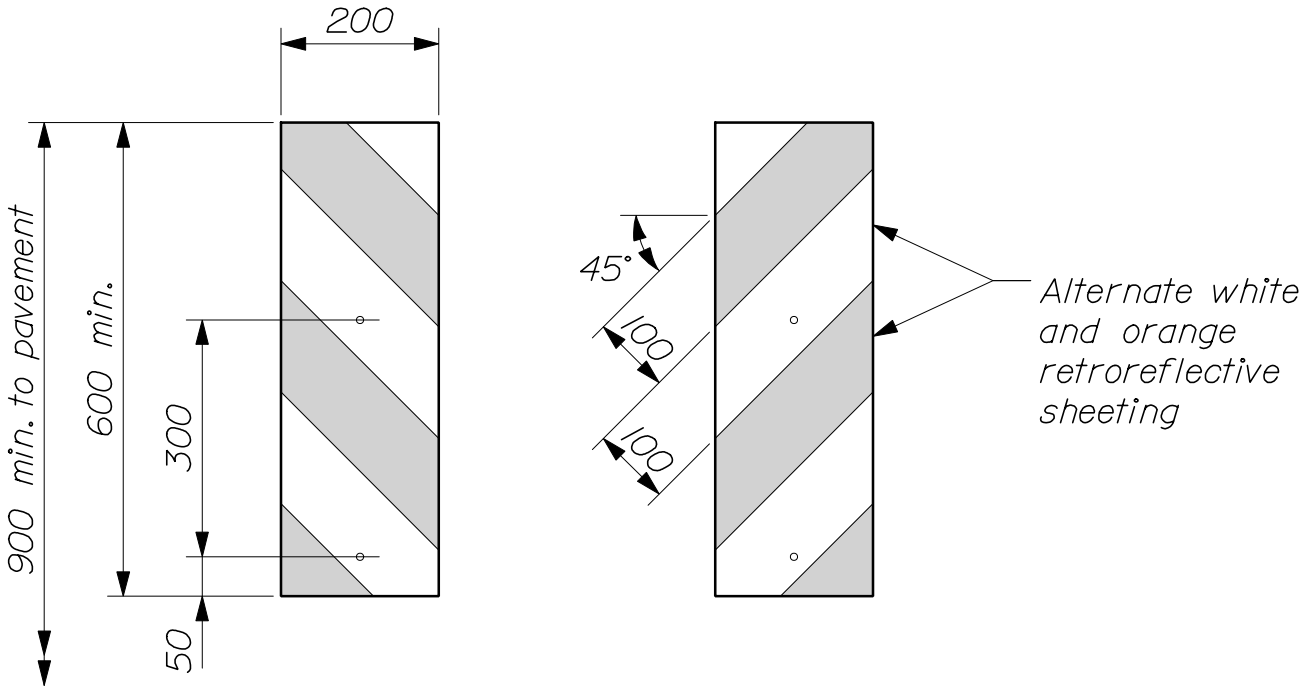

-- VERTICAL PANELS --

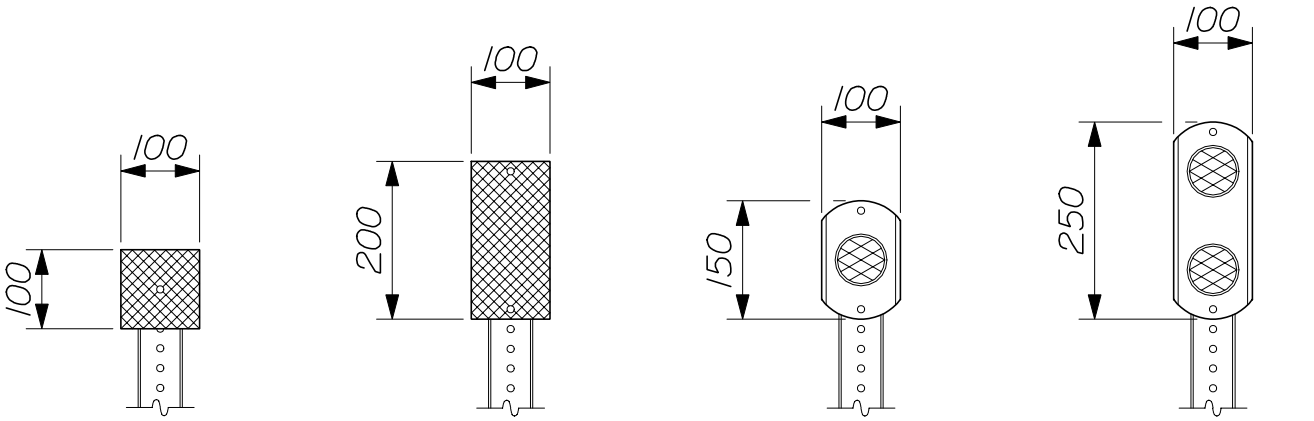

Retroreflective Sheeting

75 mm Diameter Reflector

-- DELINEATORS --

CHANNELIZING DEVICES

652(03)

NOTES:

1. Reflectorize vertical panels with alternate orange and white stripes as shown.

2. Mount delineators 1200 mm (measured to center) above the pavement surface.

3. Drums may be weighted with a maximum of 10 kg of dry sand.

4. Temporary raised pavement marker color shall match the corresponding pavement striping color: clear markers for white striping and amber markers for yellow striping.

5. Cones Type "A" may be ballasted with weighted rings.

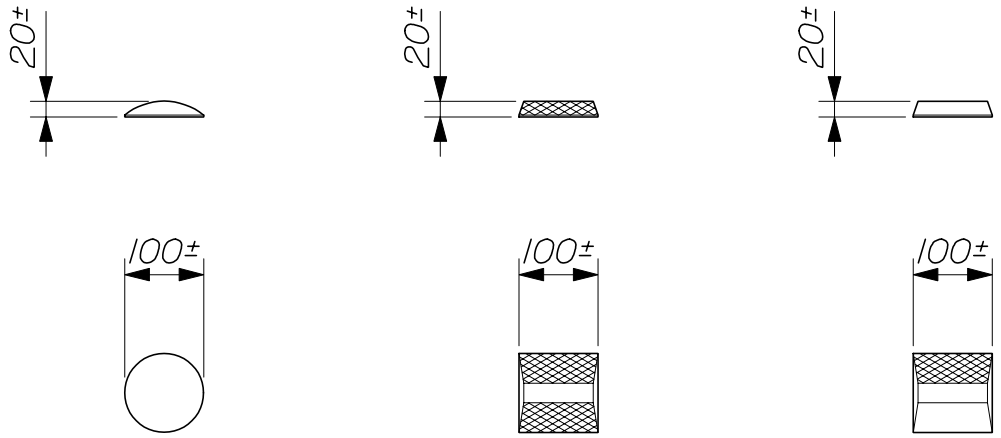

Type "A" Type "B" Type "C"

-- TEMPORARY RAISED PAVEMENT MARKERS --

CHANNELIZING DEVICES
652(04)

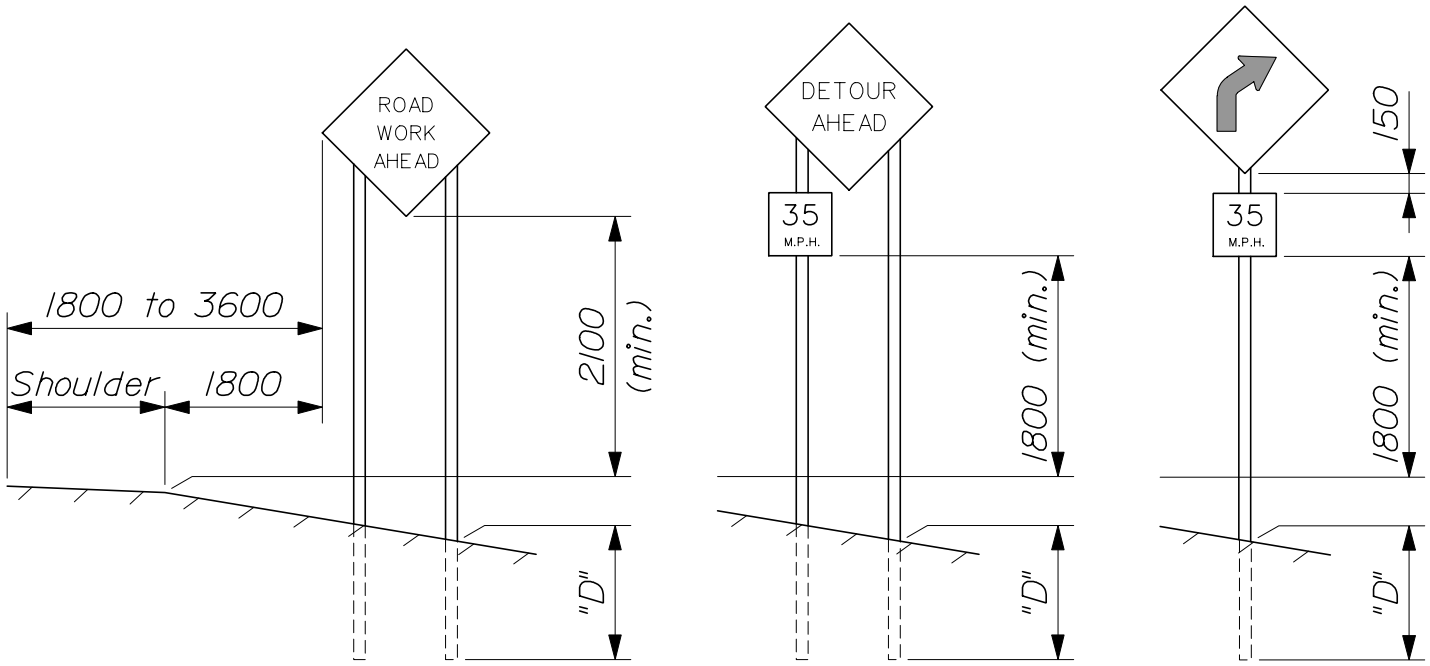

-- RURAL AREA --
(Fixed signs)

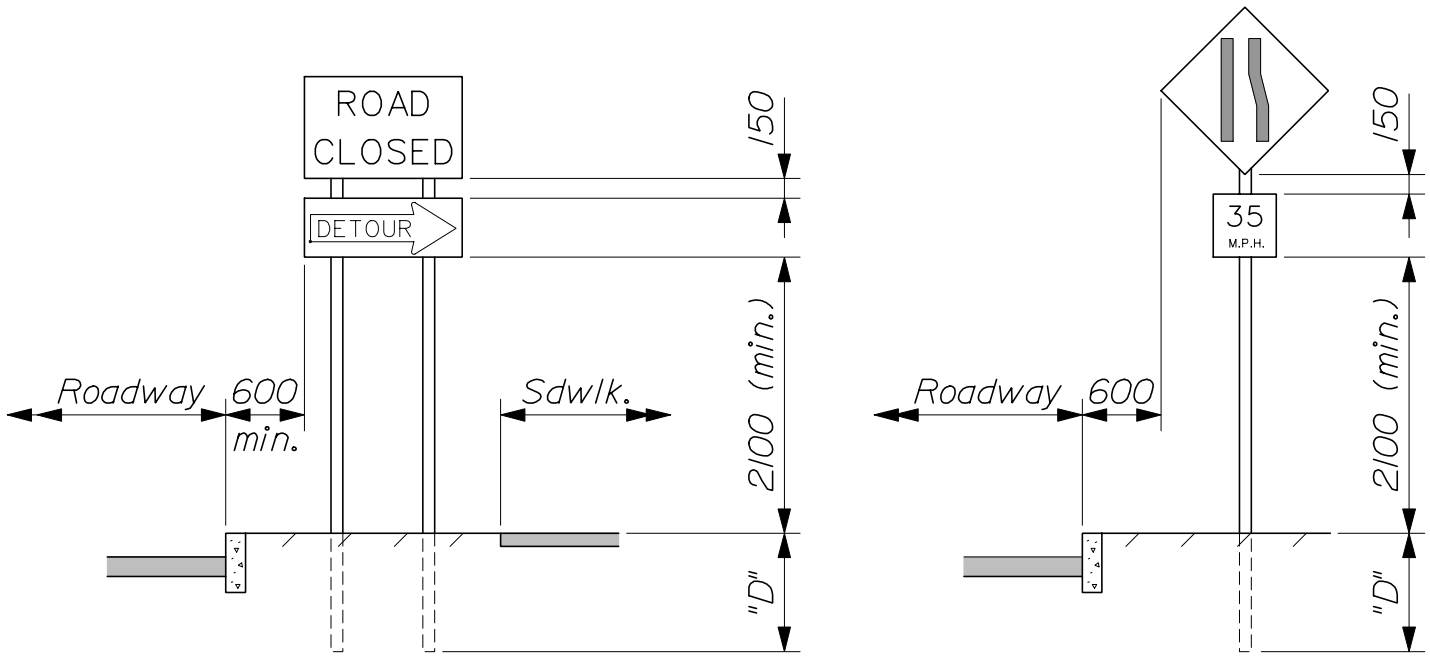

-- URBAN AREA --
(Fixed signs)

# CONSTRUCTION SIGNS
652(05)

NOTES;

1. All signs shall conform to the applicable provisions of the current edition of the "Manual on Uniform Traffic Control Devices for Streets and Highways", FHWA; and to "Standard Highway Signs", FHWA, 2000. Refer to MUTCD, Part VI for any information not shown in these details.

2. Steel U-channels are required as sign posts.

3. Mount signs that are wider than 900 mm or larger than one square meter in area on two or more posts.

4. When parking is permitted within 60 meters of the sign, mount the sign a minimum of 2100 mm above the pavement surface.

CONSTRUCTION SIGNS

652(06)

NOTES:

1. Signs shown are for one direction only. Repeat the signing for the opposite direction.

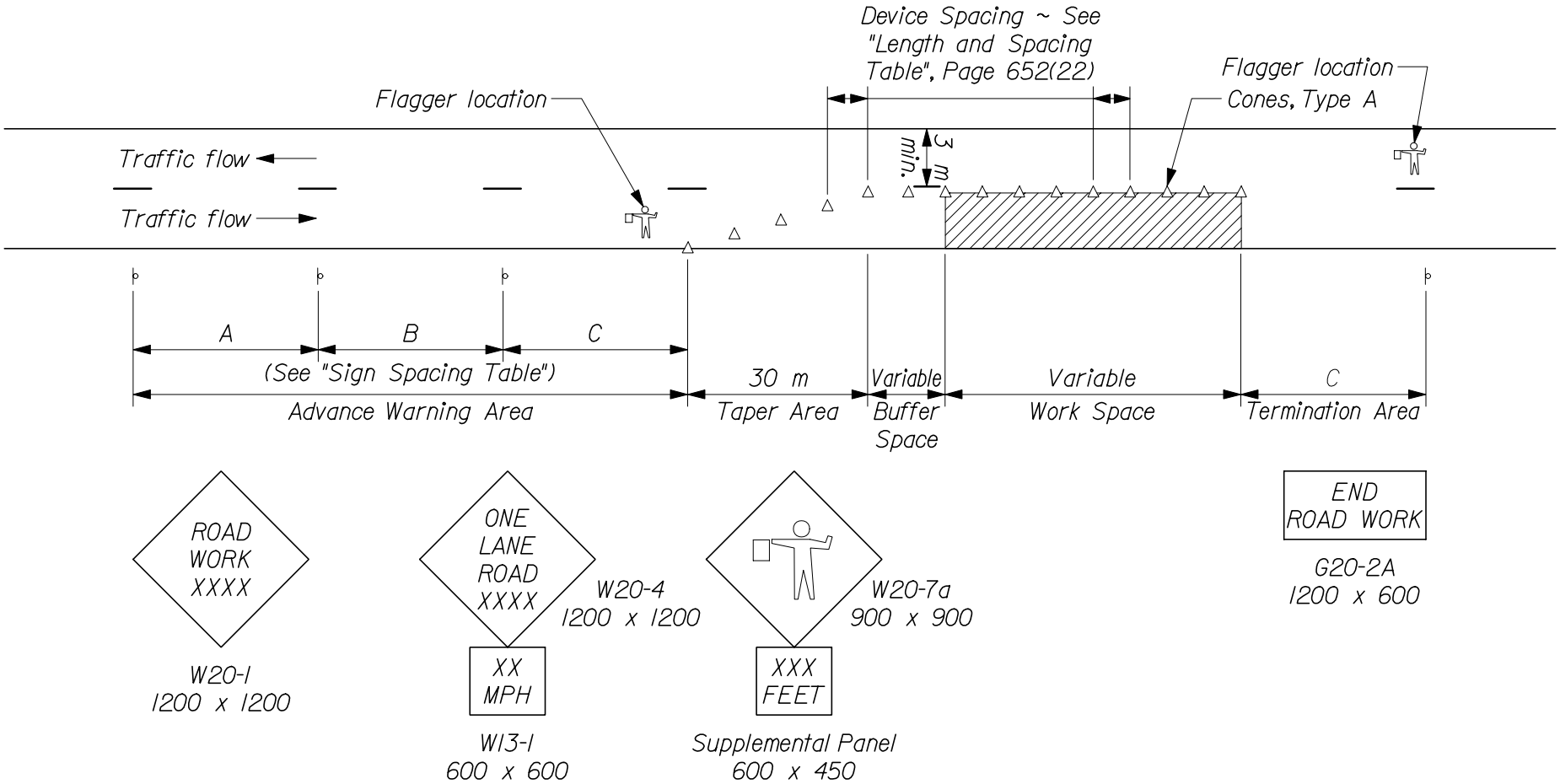

TYPICAL APPLICATION: TWO - WAY, TWO LANE ROADWAY, CLOSING ONE LANE USING FLAGGERS

NOTES:

1. For operations that require a shoulder closure for a day or less, drums may be replaced with Type "A" Cones.

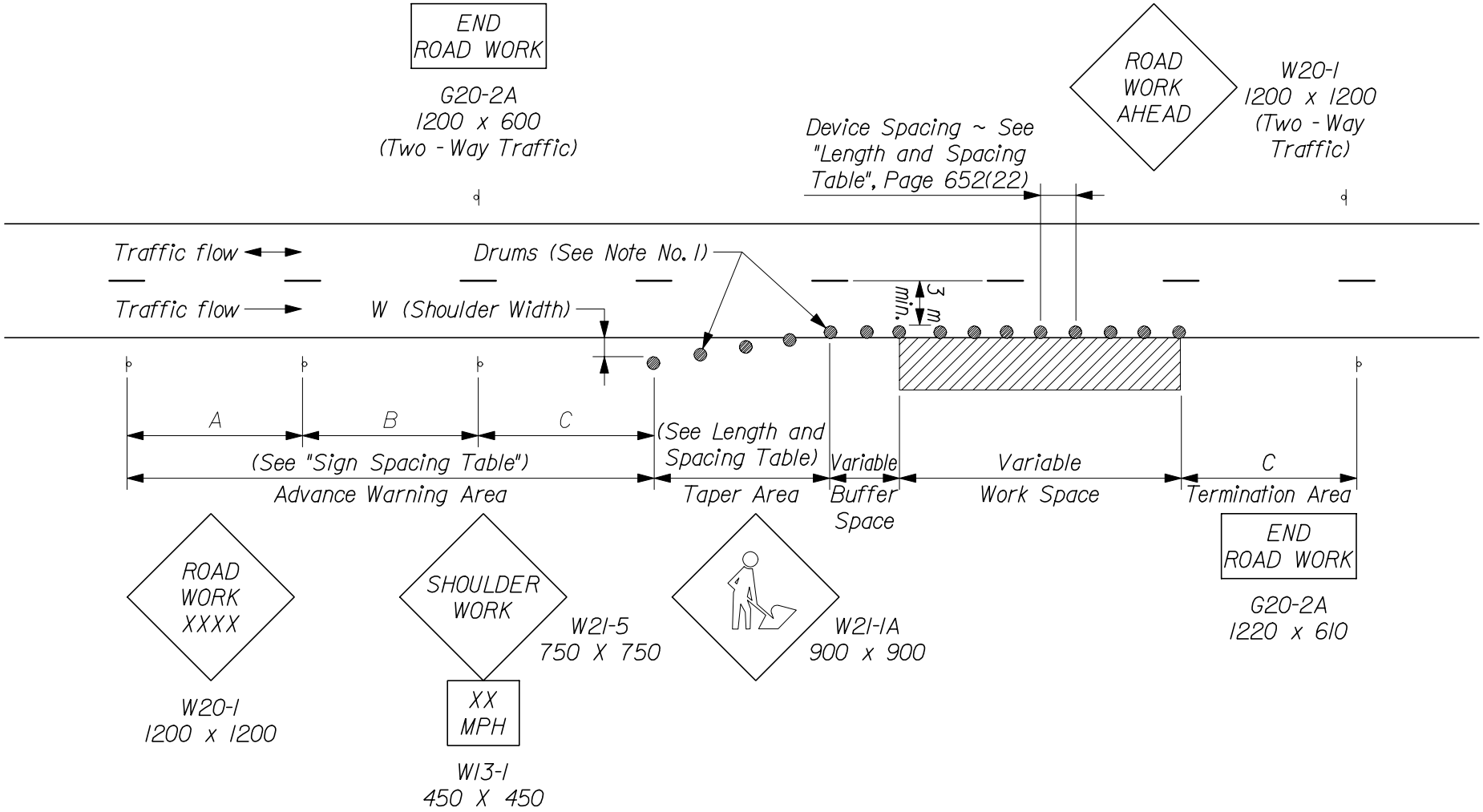

TYPICAL APPLICATION: ONE - WAY OR TWO - WAY,
TWO LANE ROADWAY, CLOSING SHOULDER

NOTES:

1. For operations that require a shoulder closure for a day or less, drums may be replaced with Type "A" Cones.

2. For one - way traffic, repeat signs on both sides of the roadway.

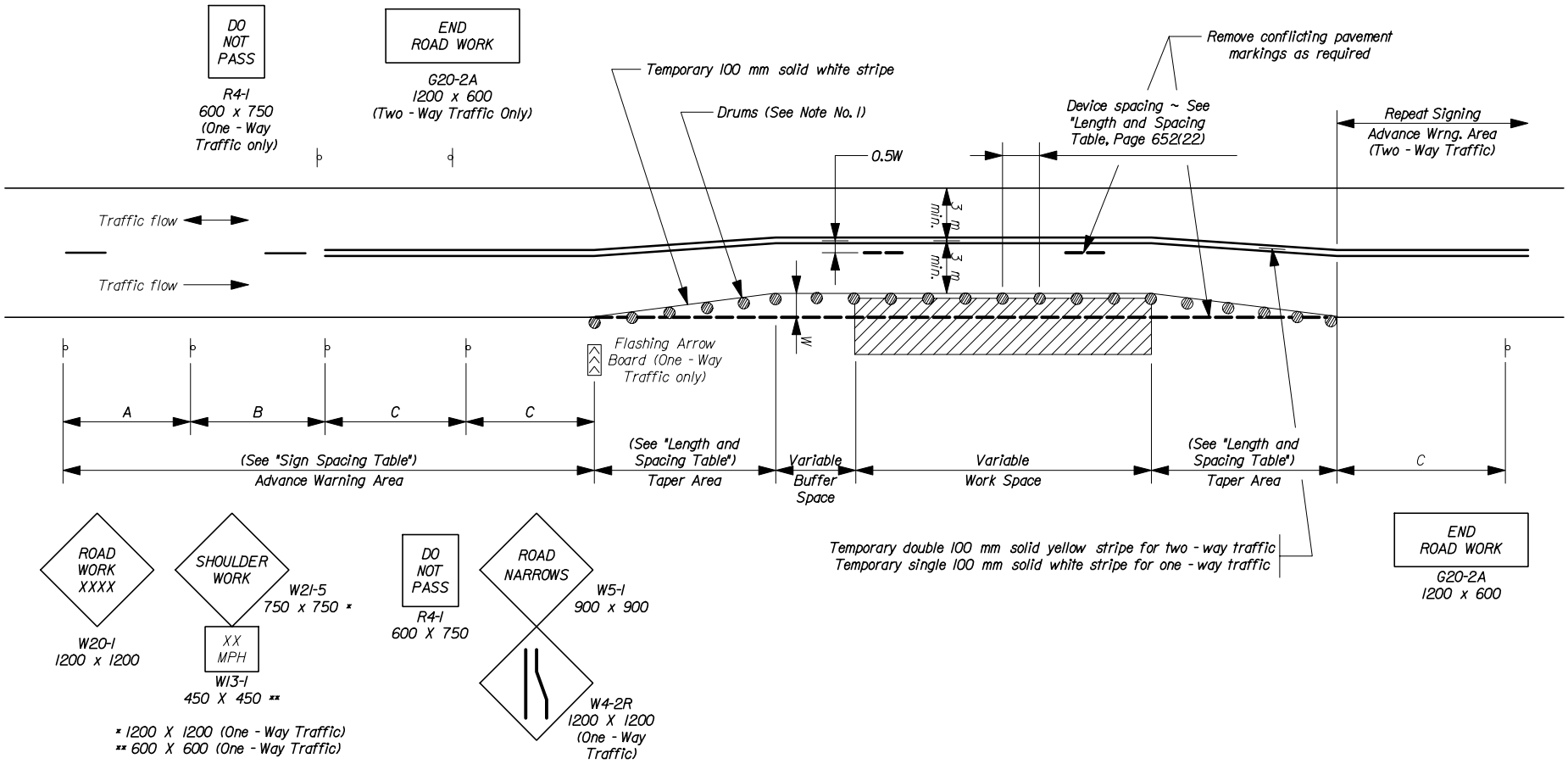

TYPICAL APPLICATION: ONE - WAY OR TWO - WAY, TWO LANE ROADWAY, CLOSING PARTIAL LANE WIDTH AND SHOULDER

NOTES:

1. For one - way traffic, repeat signs on both sides of the roadway.

2. Barrier placement is in accordance with the AASHTO Roadside Design Guide of January 1996. Terminate barrier ends outside the clear zone or protect the ends with an impact attenuator.

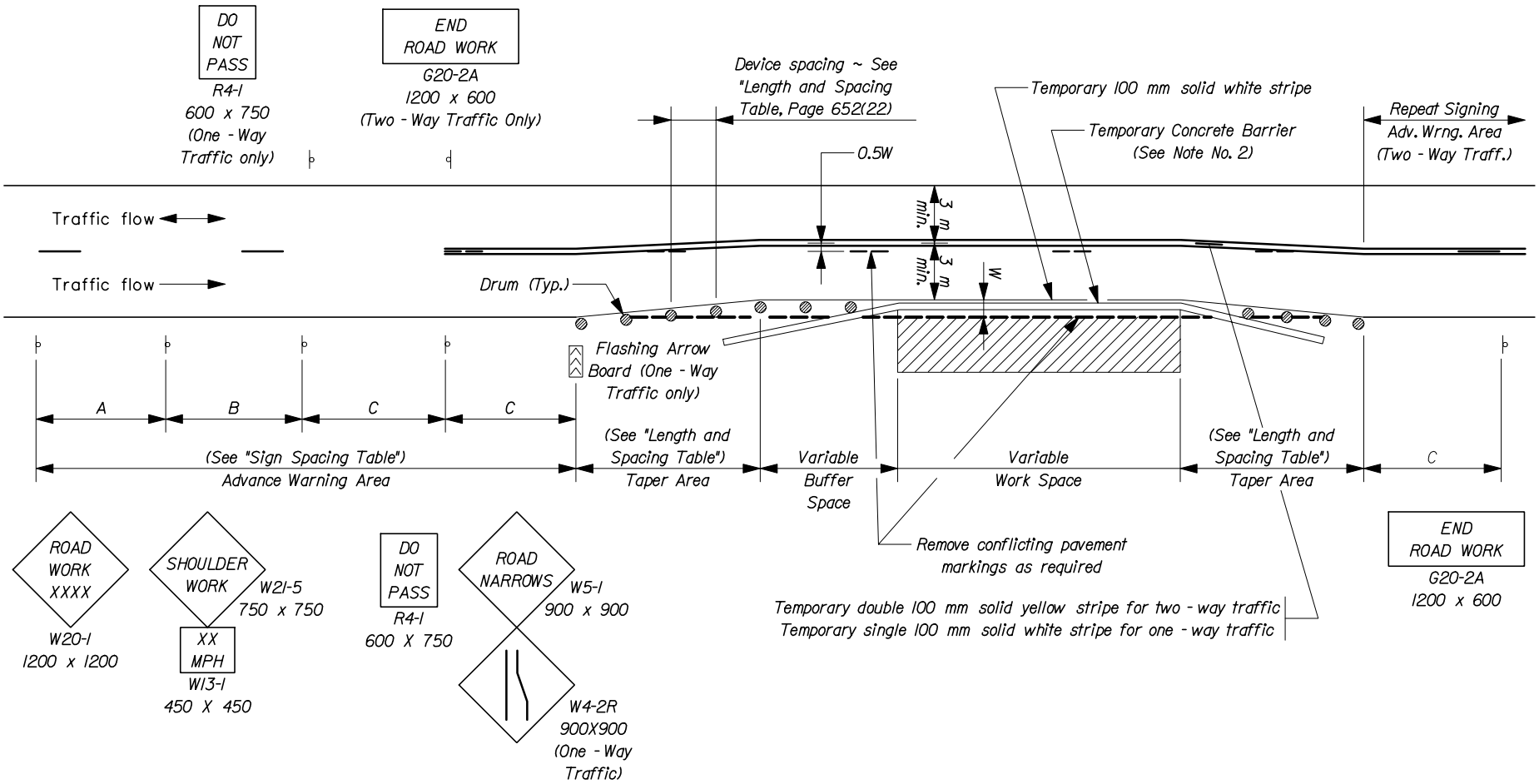

TYPICAL APPLICATION: ONE - WAY OR TWO - WAY, TWO LANE ROADWAY, CLOSING PARTIAL LANE AND SHOULDER USING TEMPORARY CONCRETE BARRIER

NOTES:

1. Barrier placement is in accordance with the AASHTO Roadside Design Guide of January 1996. Terminate barrier ends outside the clear zone or protect the ends with an impact attenuator.

2. Right lane closure is shown. For left lane closure, substitute signing with W20-5L and W4-2L.

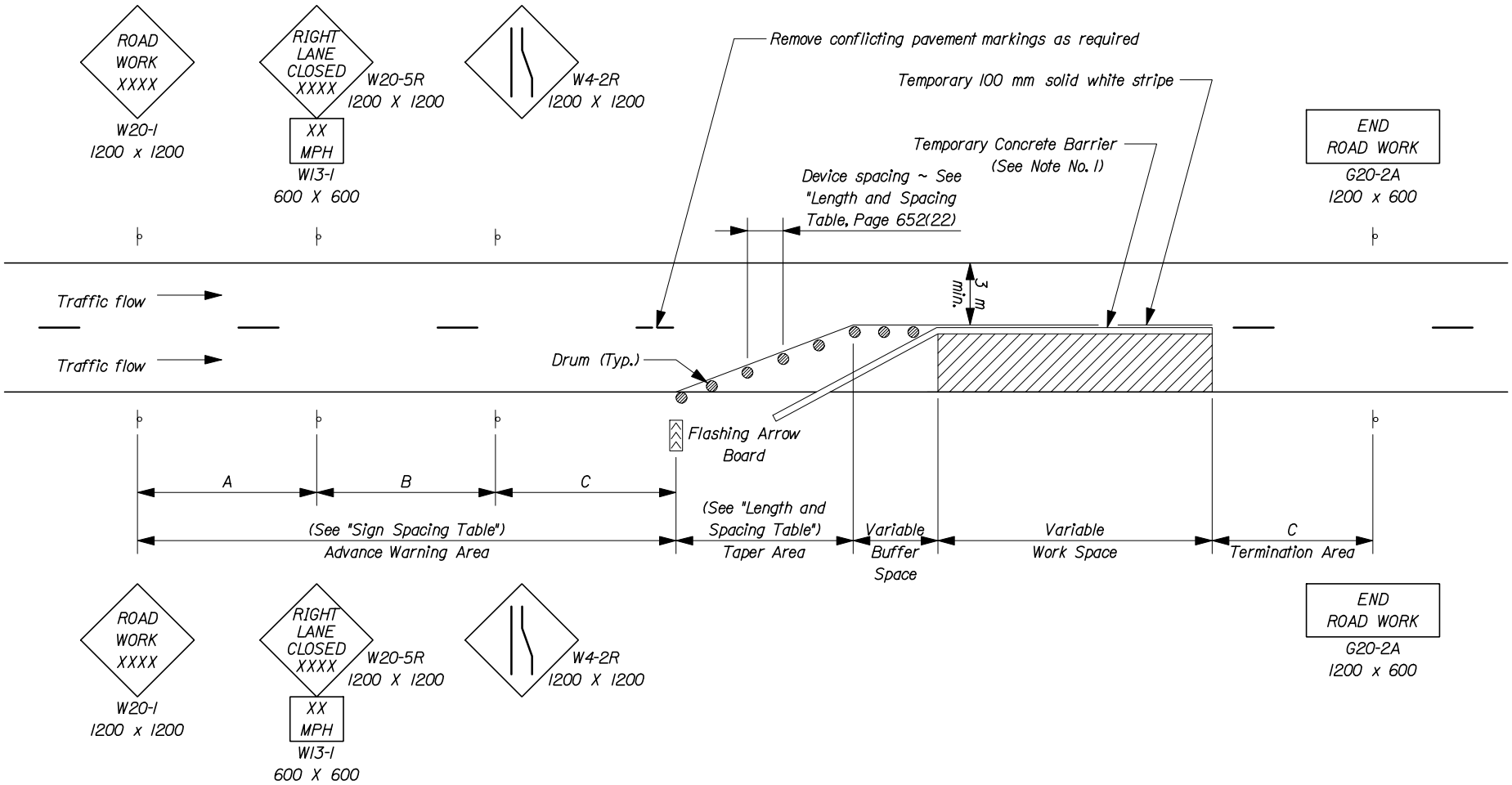

TYPICAL APPLICATION: ONE - WAY, TWO LANE ROADWAY, CLOSING ONE LANE, USING TEMPORARY CONCRETE BARRIER (90 KPH OR LESS)

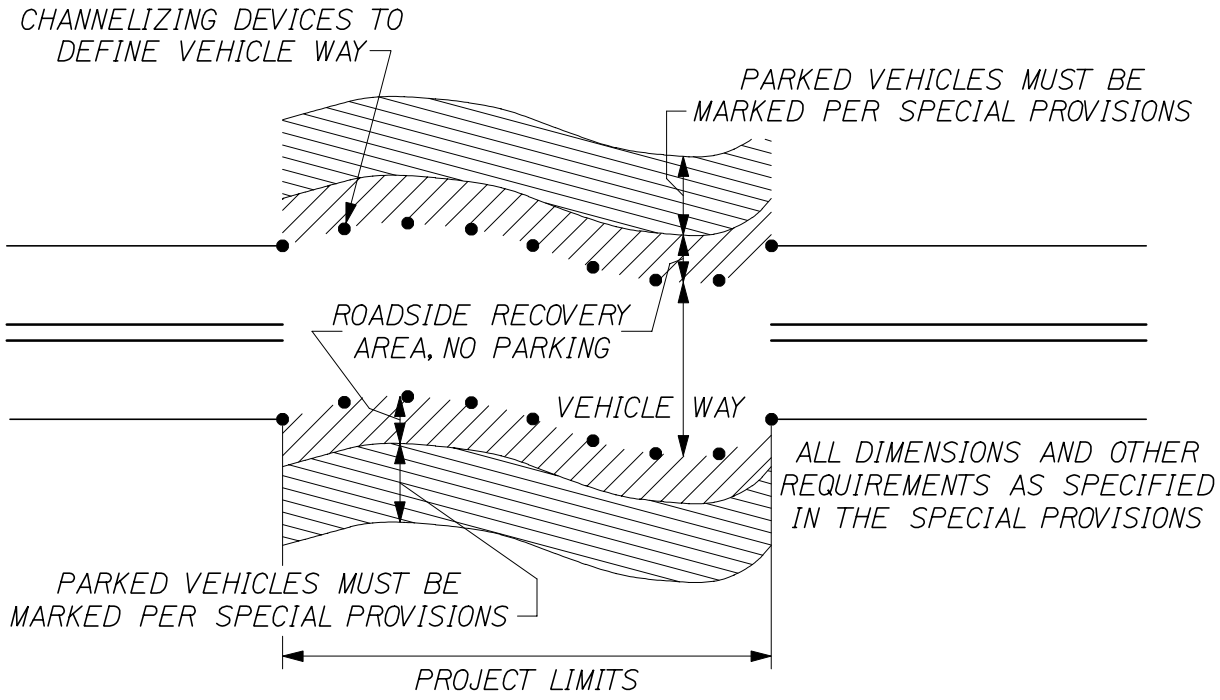

-- ROADSIDE RECOVERY AREA --

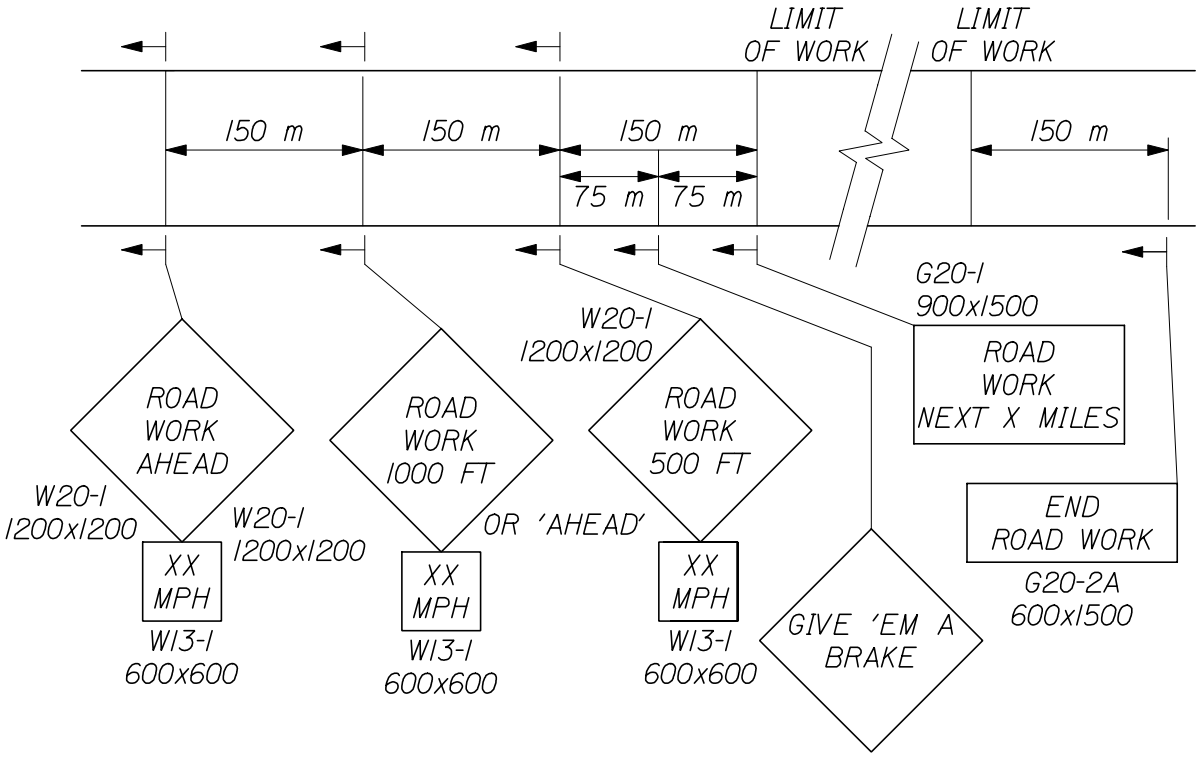

-- PROJECT APPROACH SIGNING --
EXPRESSWAY

# CONSTRUCTION TRAFFIC CONTROL
652(12)

NOTES:

Omit W20-1 if lane closure signing array is within project limits.
Alter pavement markings as required.
Maintain 4.5 m lateral clearance.
Use similar signing for left lane closure.

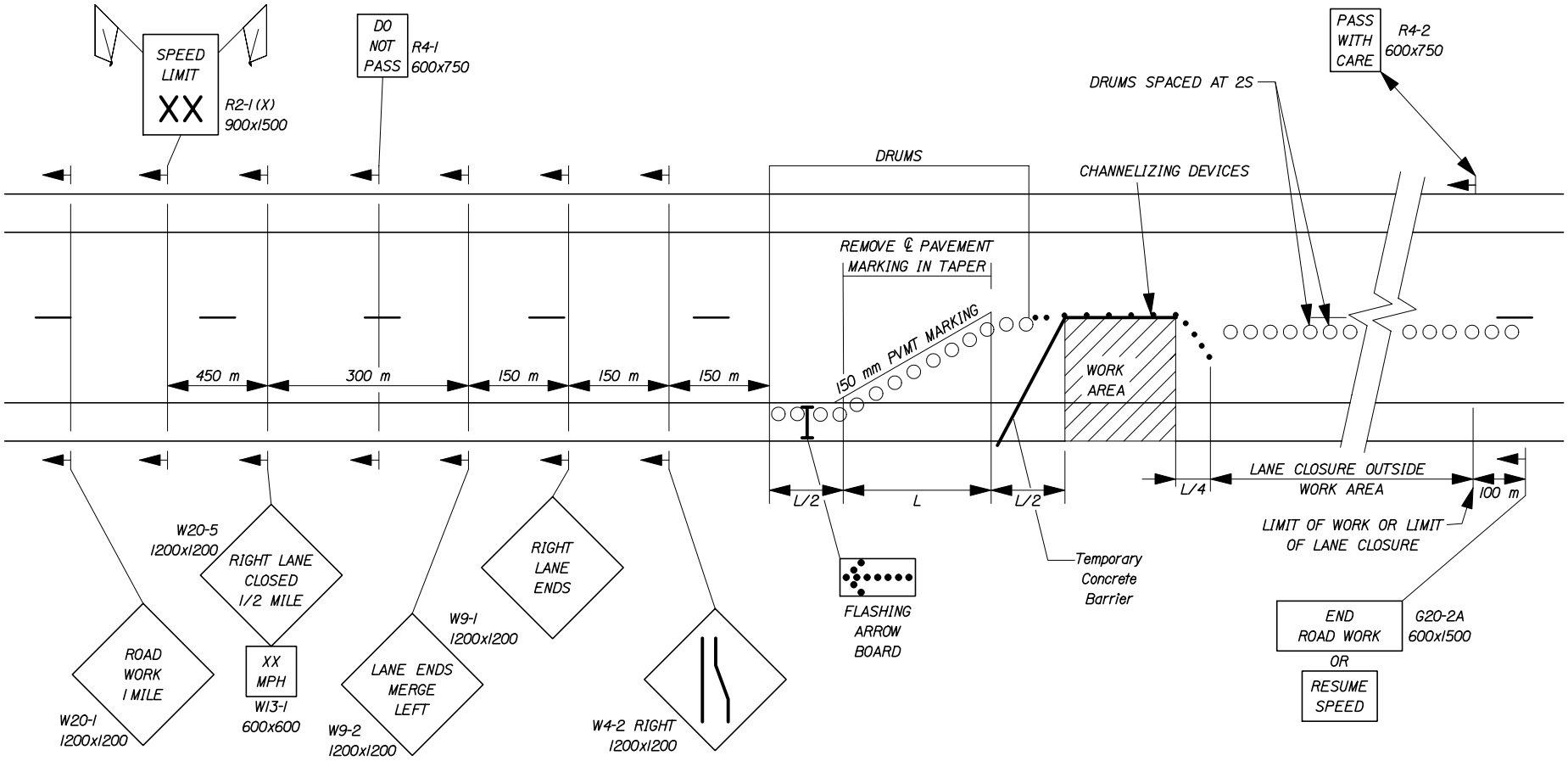

-- EXPRESSWAY LANE CLOSURE --

CONSTRUCTION TRAFFIC CONTROL
652(13)

Note:

Use shaded signs when called for in the Special Provisions

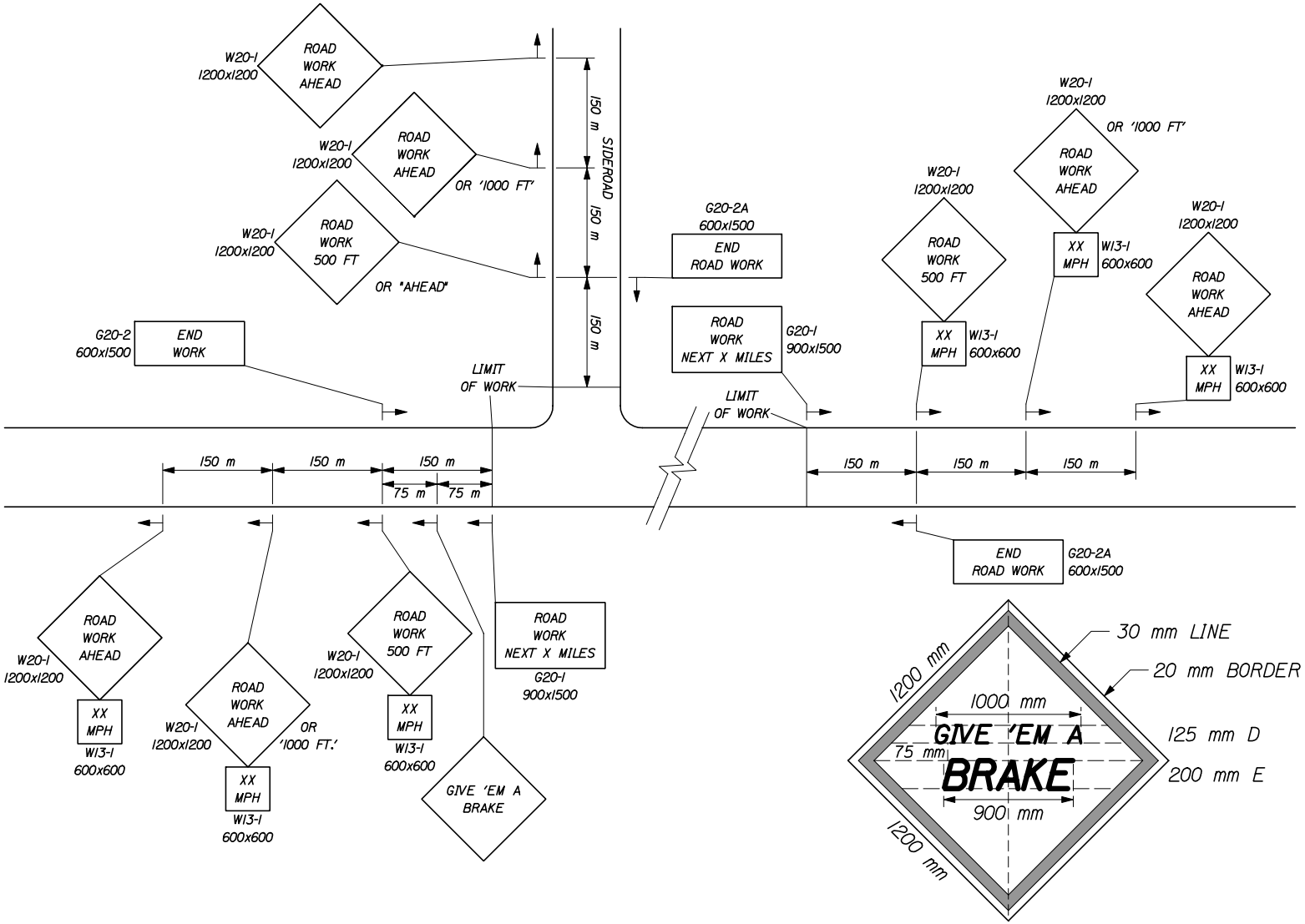

-- PROJECT APPROACH SIGNING --
TWO WAY TRAFFIC

CONSTRUCTION TRAFFIC CONTROL
652(14)

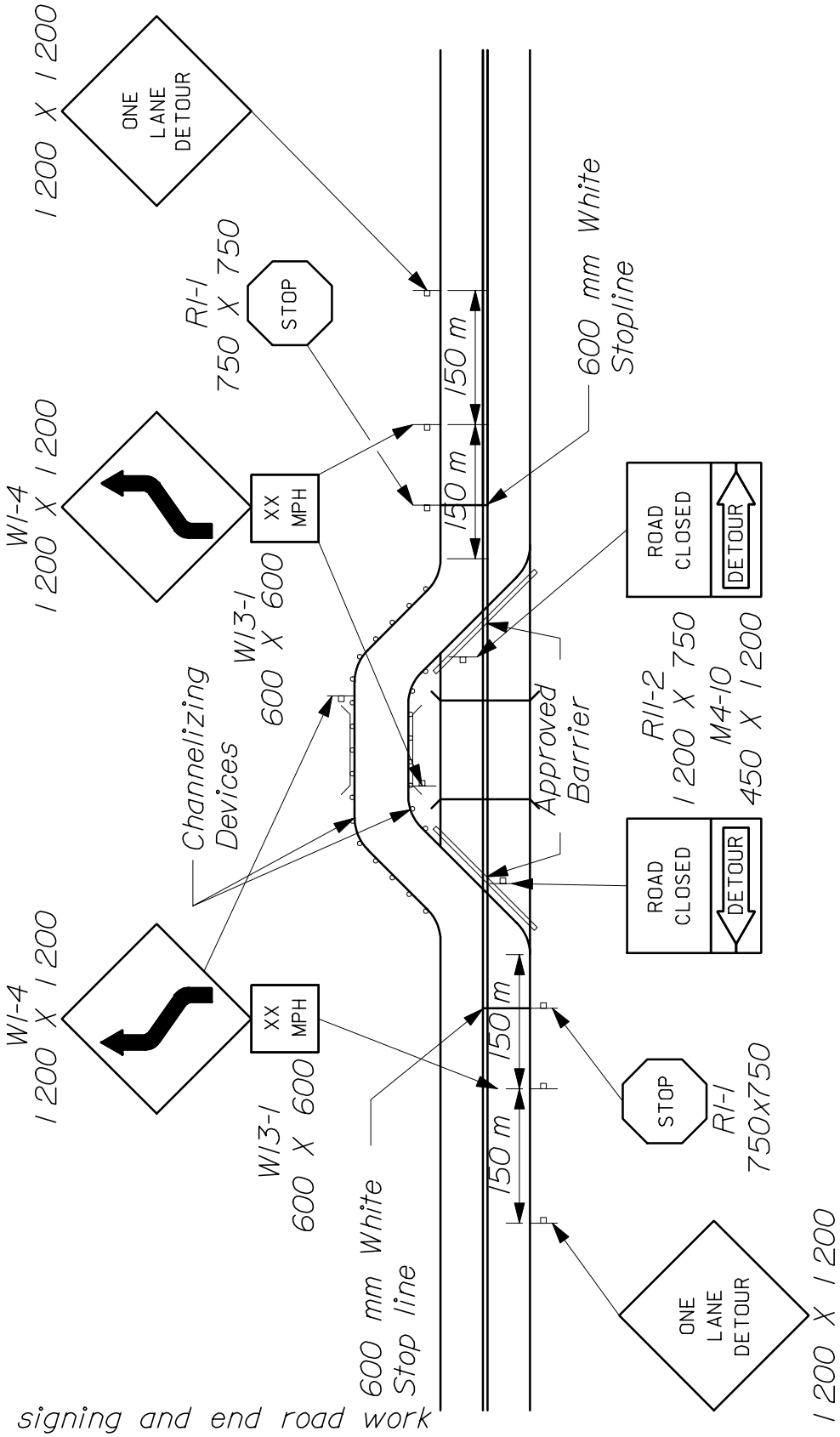

Note:
Approach signing and end road work signs are required if this work is the construction project.

ONE WAY DETOUR
LOW VOLUME ROAD WITH ADEQUATE SIGHT DISTANCE

652(15)

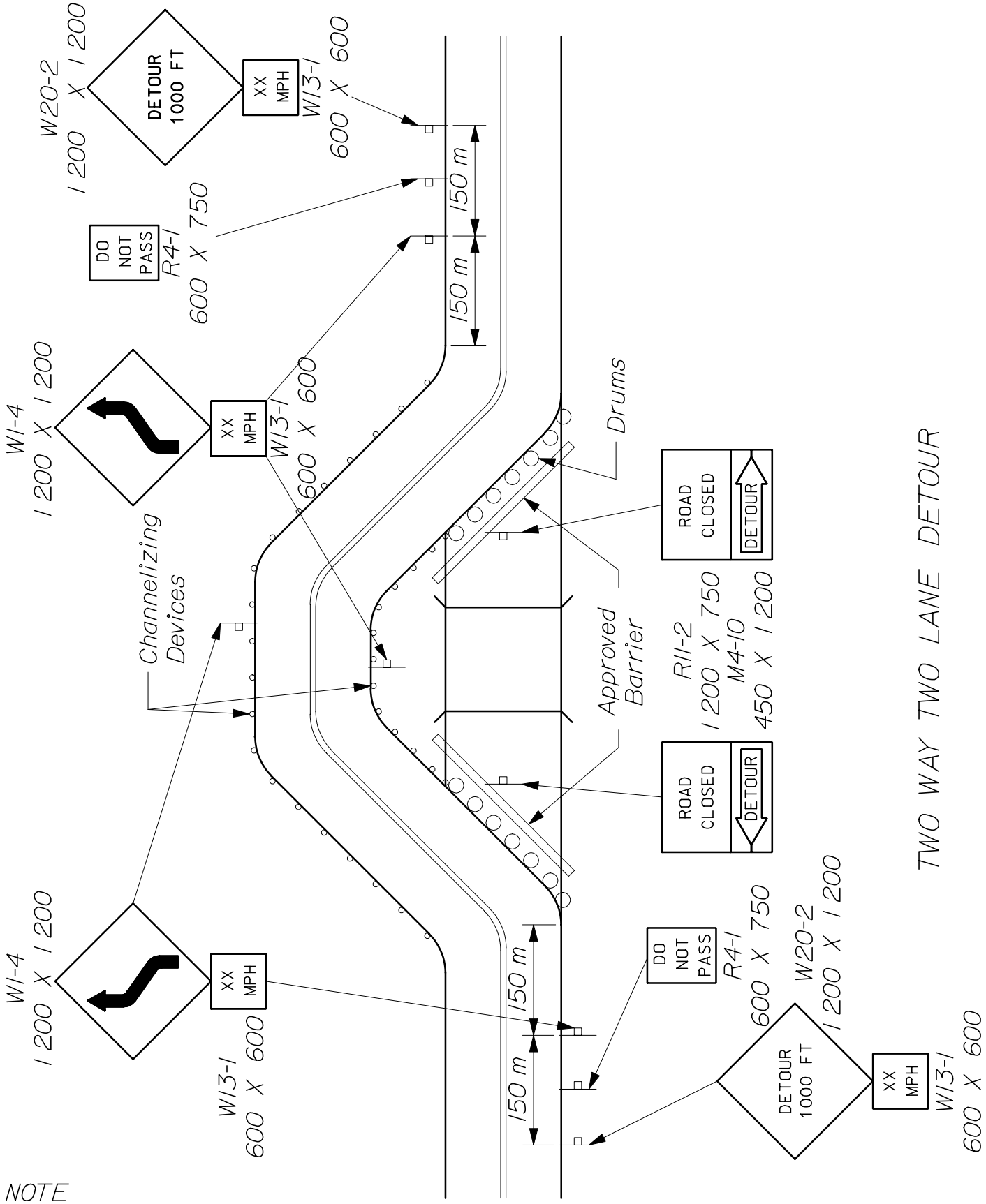

TWO WAY TWO LANE DETOUR

NOTE
APPROACH SIGNING AND END ROAD WORK SIGNS ARE REQUIRED IF THIS WORK IS THE CONSTRUCTION PROJECT.

TWO WAY TWO LANE DETOUR

652(16)

LENGTH AND SPACING TABLE									
Approach Speed		Taper Length (meters)			Buffer Space (meters)	Device Spacing (meters)			Concrete Barrier Flare Rate
Miles Per Hour	Kilometers Per Hour	Lane Width				Taper Area	Buffer Space	Work Space	
		3.0	3.3	3.6					
25	40	35	35	40	20	8	15	15	6.5:1
30	50	50	55	60	25	9	18	18	8:1
35	55	60	70	75	35	10	21	21	9.3:1
40	65	85	95	100	50	12	24	24	10.3:1
45	70	140	155	170	60	14	27	27	12:1
50	80	160	175	190	85	15	30	30	13.5:1
55	90	180	200	210	105	16	30	30	15:1

SIGN SPACING TABLE			
Road Type	Distance Between Signs (meters)		
	A	B	C
Urban (50 km/h and less)	60	60	60
Urban (55 km/h and greater)	105	105	105
Rural	150	150	150
Expressway / Urban Parkway	800	500	300

GENERAL NOTES;

1. Dimensions are in millimeters unless otherwise shown.

2. Final placement of signs and devices may be changed to fit field conditions as approved by the Engineer.

CONSTRUCTION TRAFFIC CONTROL

652(17)

DIVISION 800

MISCELLANEOUS DETAILS

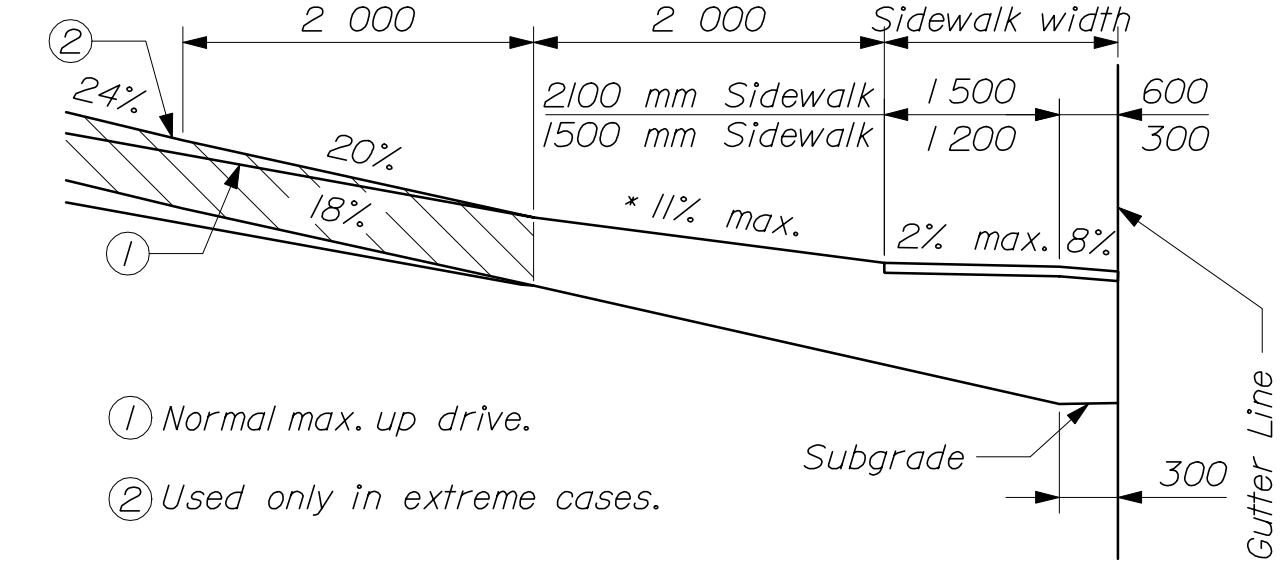

(1) Normal max. up drive.

(2) Used only in extreme cases.

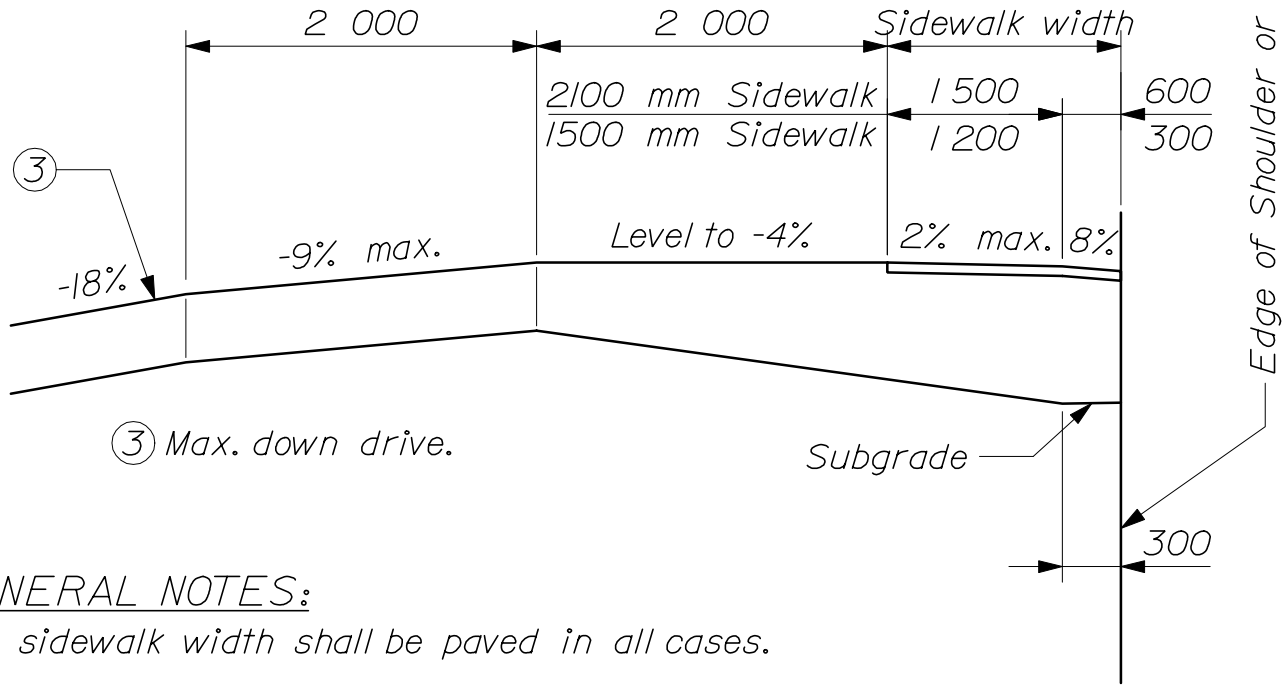

(3) Max. down drive.

GENERAL NOTES:

1. The sidewalk width shall be paved in all cases.

2. All residential or commercial drives 10% and over shall be paved.

NOTES ON MAXIMUM DRIVEWAY PROFILES:

1. These profiles are a guide for the majority of cases, but should be field checked when the main line grade is steep (4% to 6% or greater) or the angle of approach to the drive is unusual.

2. Generally the majority of drives on a project will be built with flatter profiles than these maximum cases.

*3. When grading drives which are flatter than the maximum profiles the following rule of thumb should be used. Do not exceed a grade % change of more than 9% in a 2 000 mm increment of driveway length. This applies to both up and down profiles.

DRIVES ON SIDEWALK SECTIONS

801(01)

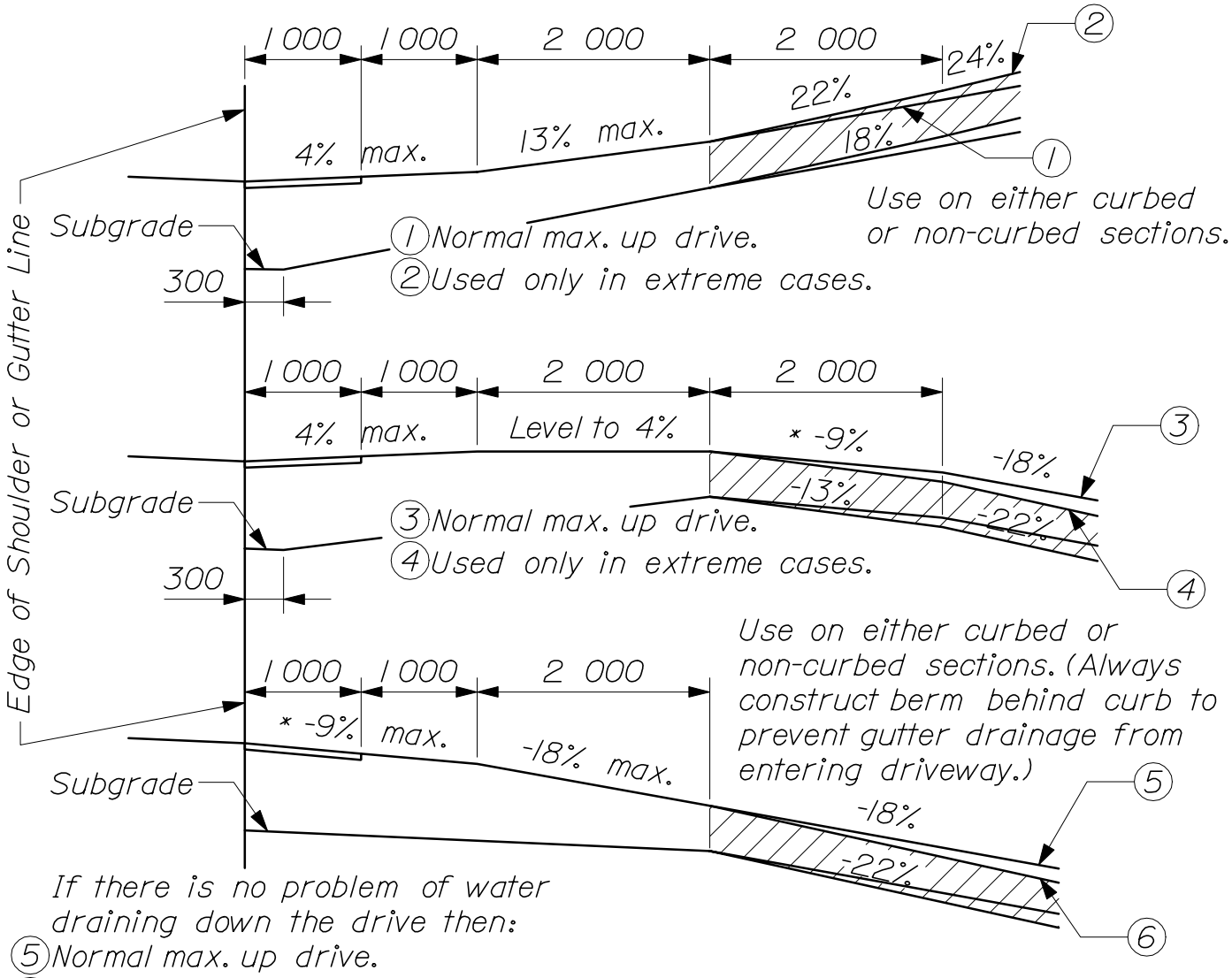

GENERAL NOTES:

1. The first 1 000 mm shown as pavement shall be paved only when abutting a paved area.

2. All residential or commercial drives 10% and over shall be paved.

NOTES ON MAXIMUM DRIVEWAY PROFILES:

1. These profiles are a guide for the majority of cases, but should be field checked when the main line grade is steep (4% to 6% or greater) or the angle of approach to the drive is unusual.

2. Generally the majority of drives on a project will be built with flatter profiles than these maximum cases.

* 3. When grading drives which are flatter than the maximum profiles the following rule of thumb should be used: Do not exceed a grade % change of more than 9% in a 2 000 mm increment of driveway length. This applies to both up and down profiles.

DRIVES ON NON-SIDEWALK SECTIONS

801(02)

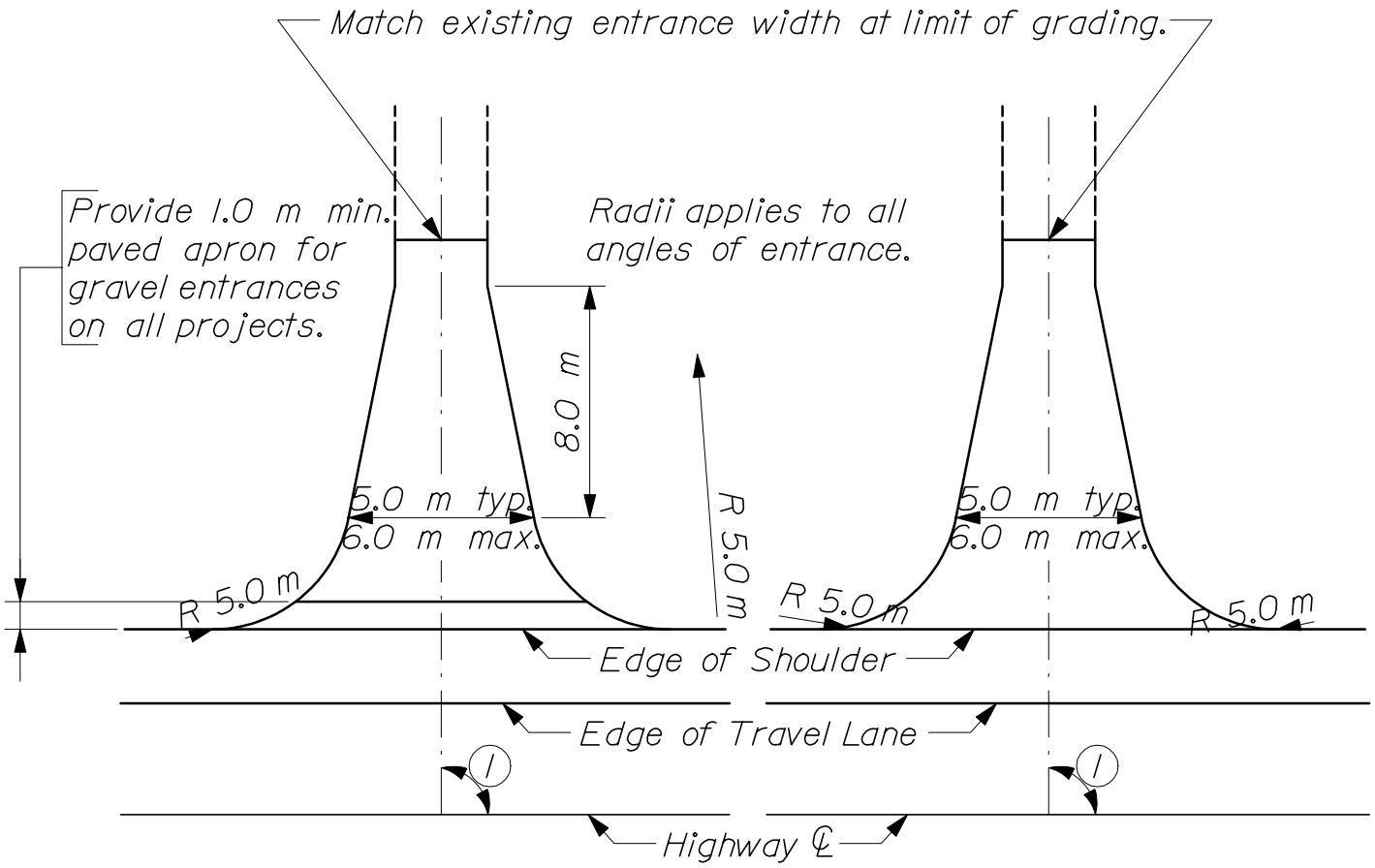

~ GRAVEL ENTRANCE ~ ~ PAVED ENTRANCE ~

(1) Entrance angle should not be less than 45°.

RESIDENTIAL ENTRANCE ONTO UNCURBED HIGHWAY - PAVED SHOULDERS

801(03)

Entrances with a high number of truck movements may be designed on an individual basis.

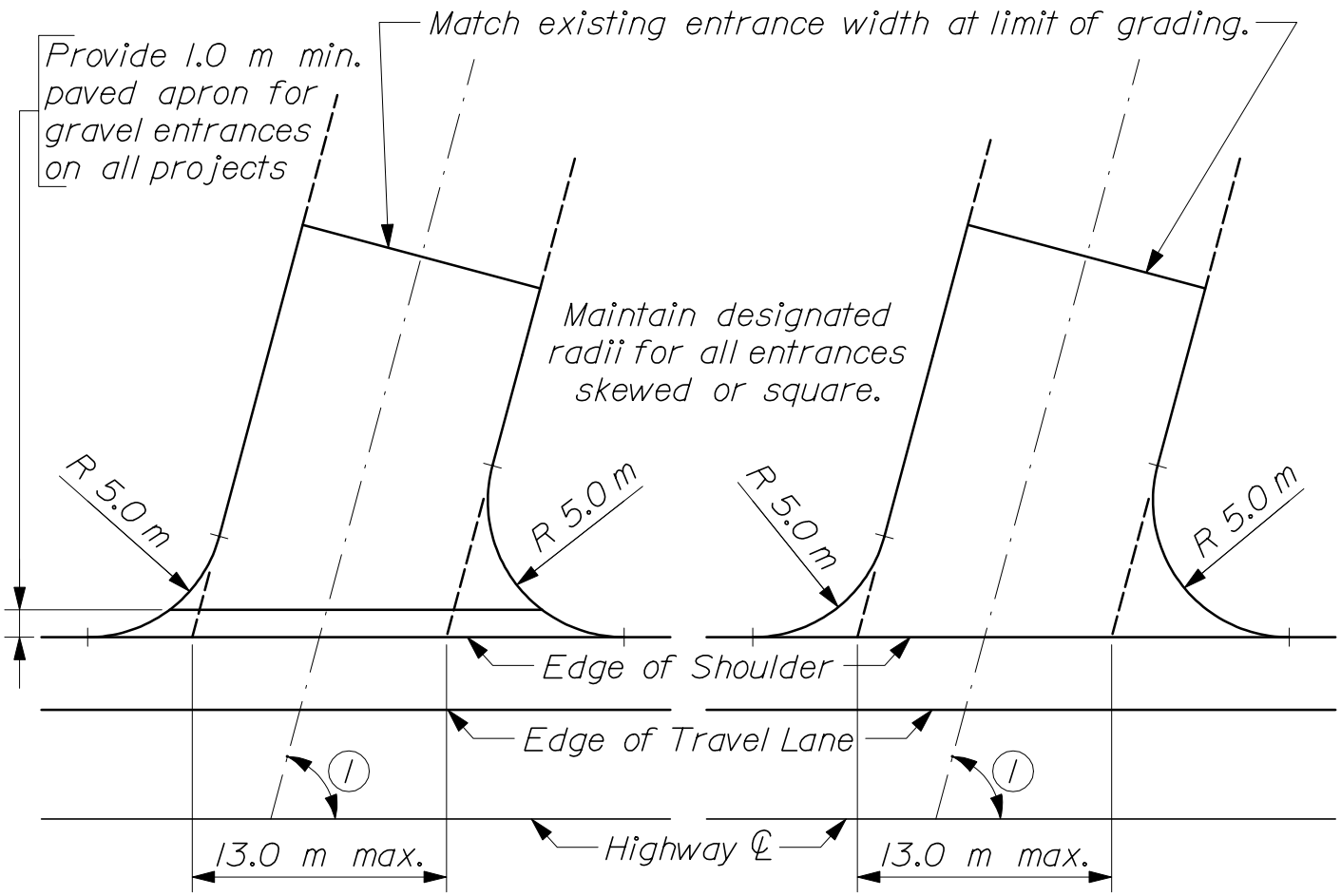

~ GRAVEL ENTRANCE ~ ~ PAVED ENTRANCE ~

(1) Entrance angle should not be less than 45°.

COMMERCIAL/INDUSTRIAL ENTRANCE ONTO ONTO UNCURBED HIGHWAY - PAVED SHOULDERS

801(04)

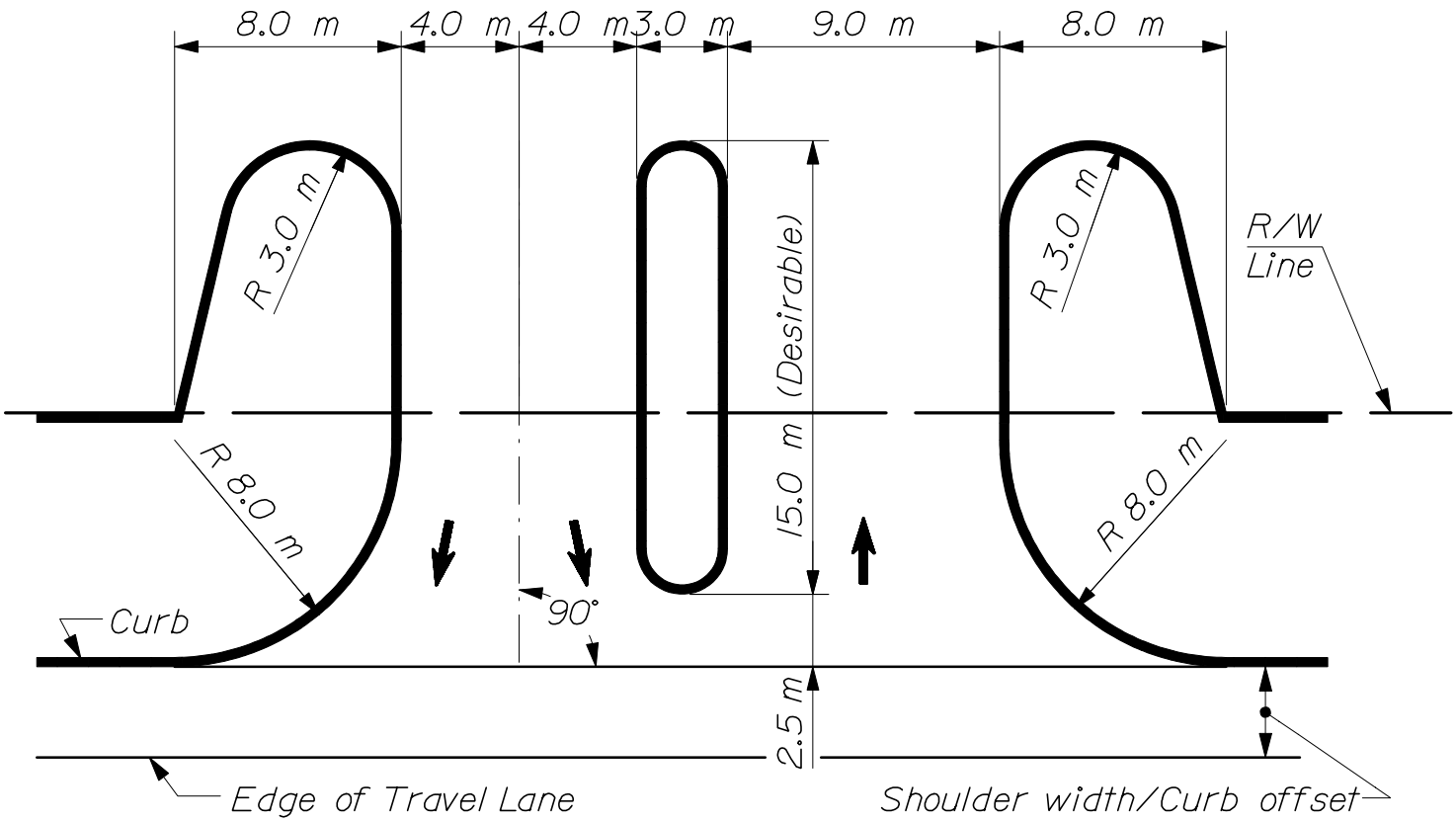

~ PAVED ENTRANCE ~

NOTES:

1. This type of entrance suitable for other high traffic volume, public-type installations.

2. All island borders shall be curbed.

SHOPPING CENTER ENTRANCE ONTO HIGHWAY - PAVED SHOULDERS

801(05)

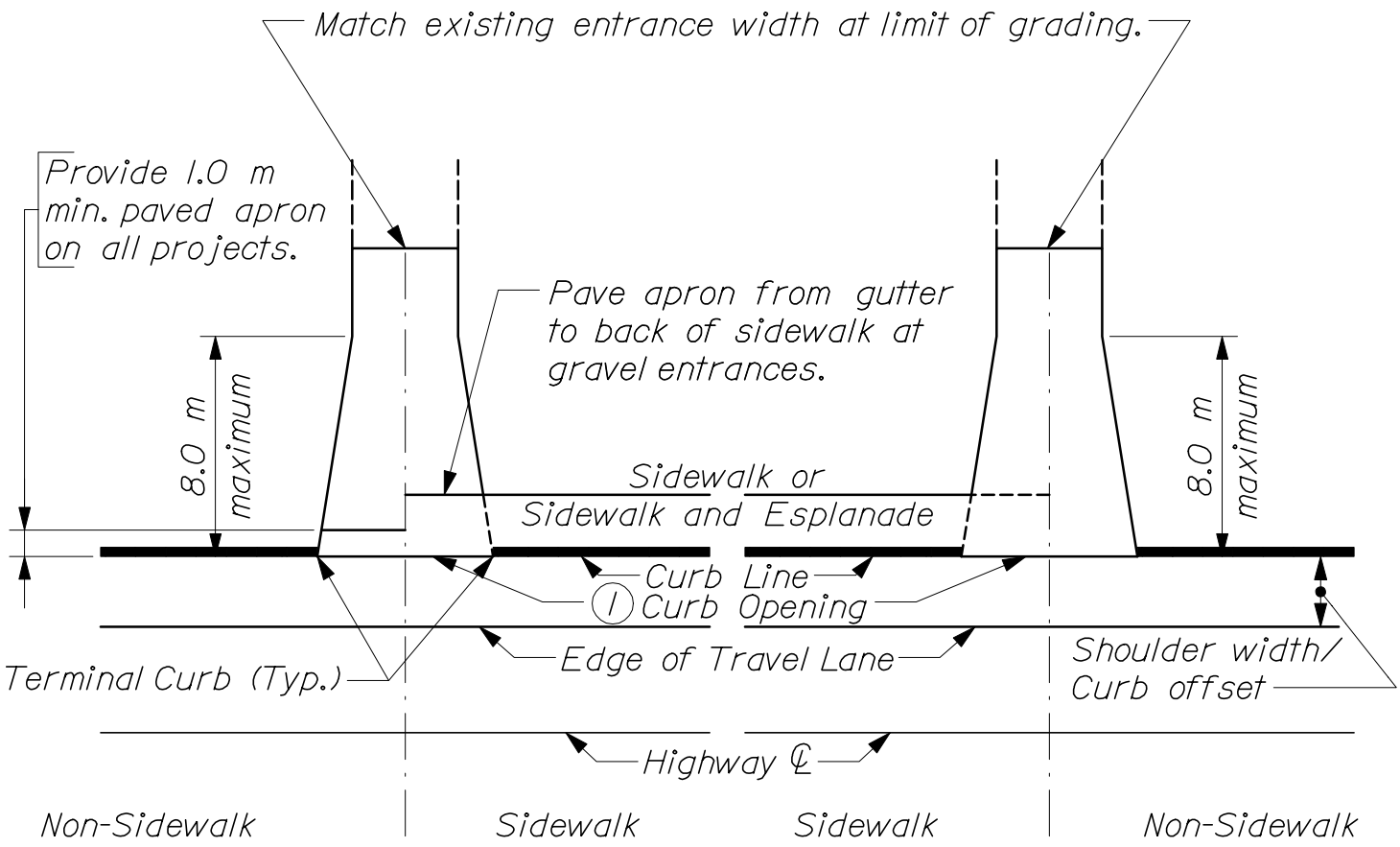

~ GRAVEL ENTRANCE ~ ~ PAVED ENTRANCE ~

(1) Minimum curb opening is 6.0 m where the shoulder width is > 2.0 m and 8.0 m where the shoulder width is < 2.0 m.

RESIDENTAL ENTRANCE ONTO CURBED HIGHWAY WITH/WITHOUT SIDEWALKS

801(06)

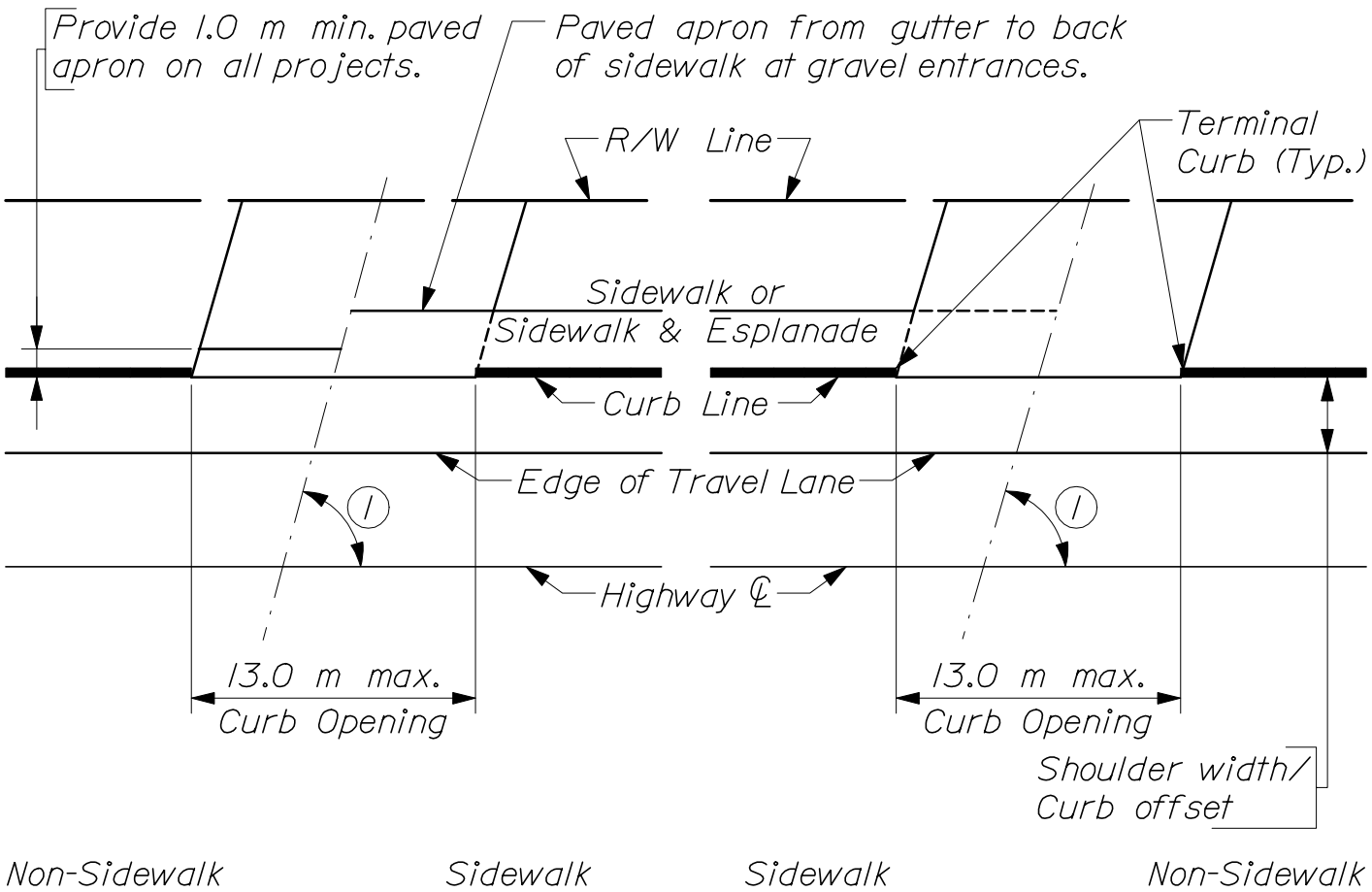

(1) Minimum entrance angle is 45° where the shoulder width ≥ 2.0 m and 60° where the shoulder width < 2.0 m.

(2) If there are high truck turning volumes, the designer should consider providing turning radii of 5.0 m - 8.0 m and/or a wider opening and/or limiting the angle of turn to accomodate trucks.

UNCURBED COMMERCIAL/INDUSTRIAL ENTRANCE ONTO CURBED HIGHWAY WITH/WITHOUT SIDEWALK

801(07)

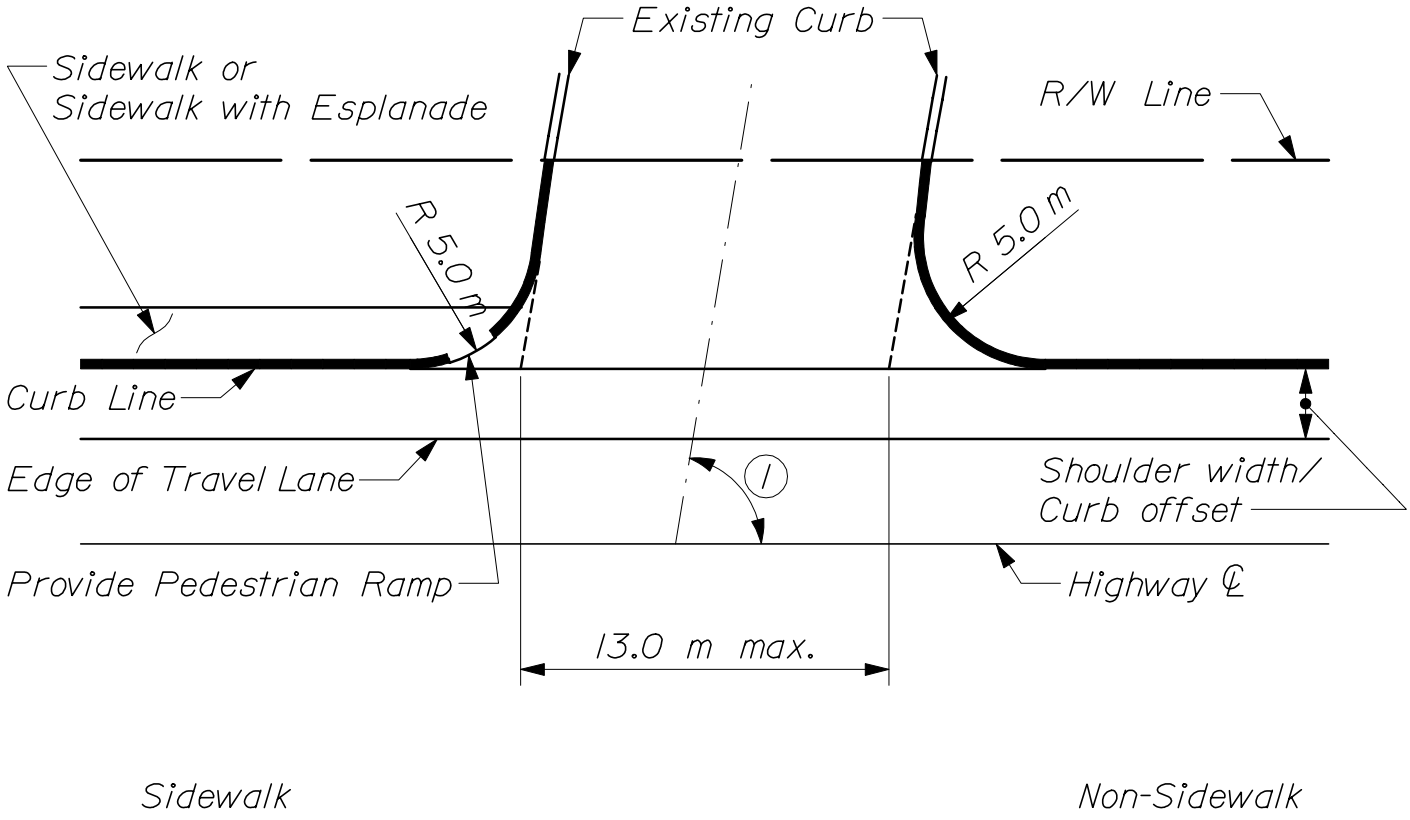

~ PAVED ENTRANCE ~

(1) Minimum entrance angle is 45° where the shoulder width ≥ 2.0 m and 60° where the shoulder width < 2.0 m.

CURBED COMMERCIAL/INDUSTRIAL ENTRANCE ONTO CURBED HIGHWAY WITH/WITHOUT SIDEWALK

801(08)

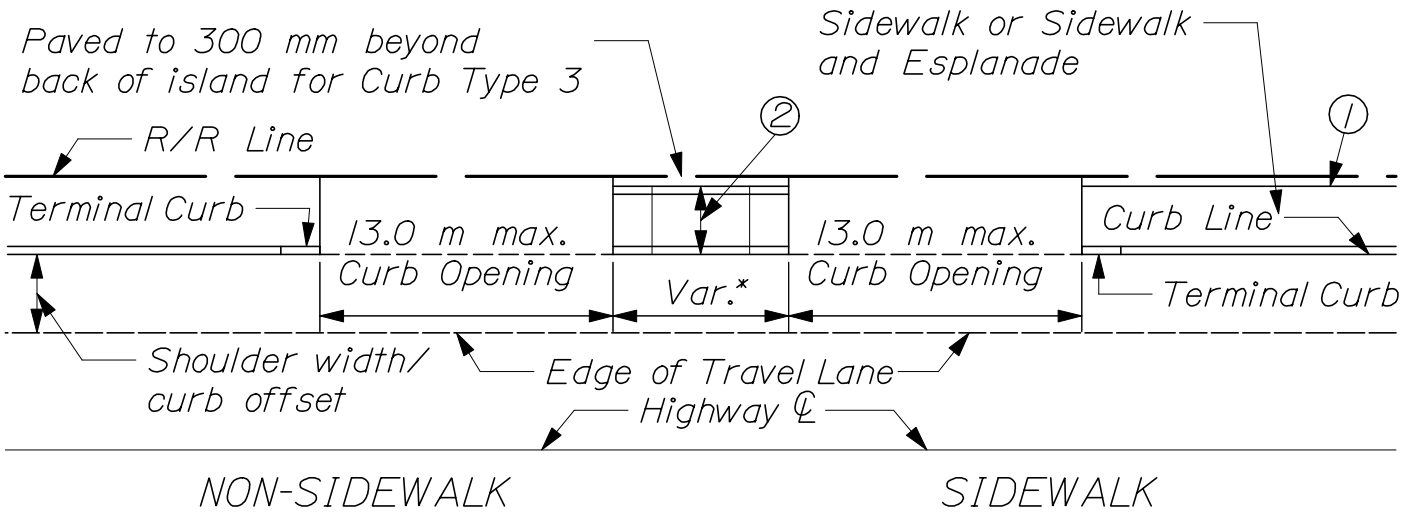

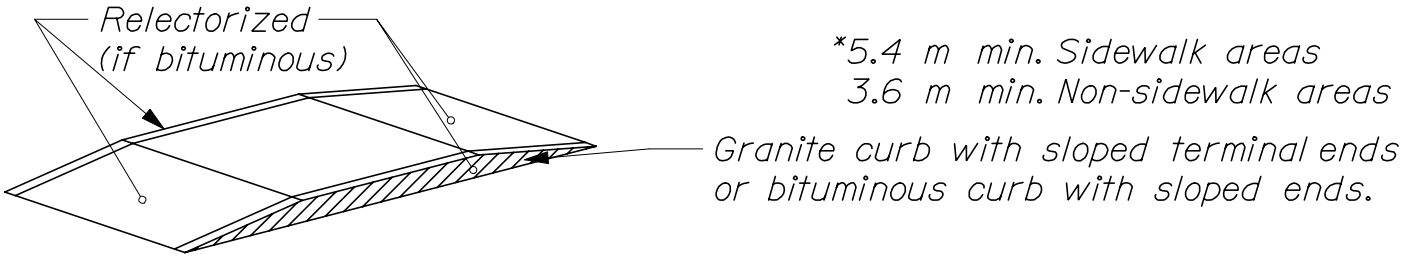

CENTRAL ISLAND

(1) Where parking of Service Area abuts sidewalk, a curb, guardrail or fence should be provided.

(2) Island width will extend within 300 mm of Right-of-Way line, if practical. When island width exceeds 3.0 m, use design in figure 8-41 in Highway Design Guide.

(3) If there are high truck turning volumes, the designer should consider providing turning radii of 5.0 m - 8.0 m and/or wider opening and/or limiting the angle of turn to accomodate trucks.

COMMERCIAL/INDUSTRIAL DOUBLE ENTRANCES ONTO CURBED HIGHWAY

(NARROW RIGHT-OF-WAY)

801(09)

T.W. = Traveled Way Pavement & Cross - slope
S. = Shoulder Pavement & Cross - slope

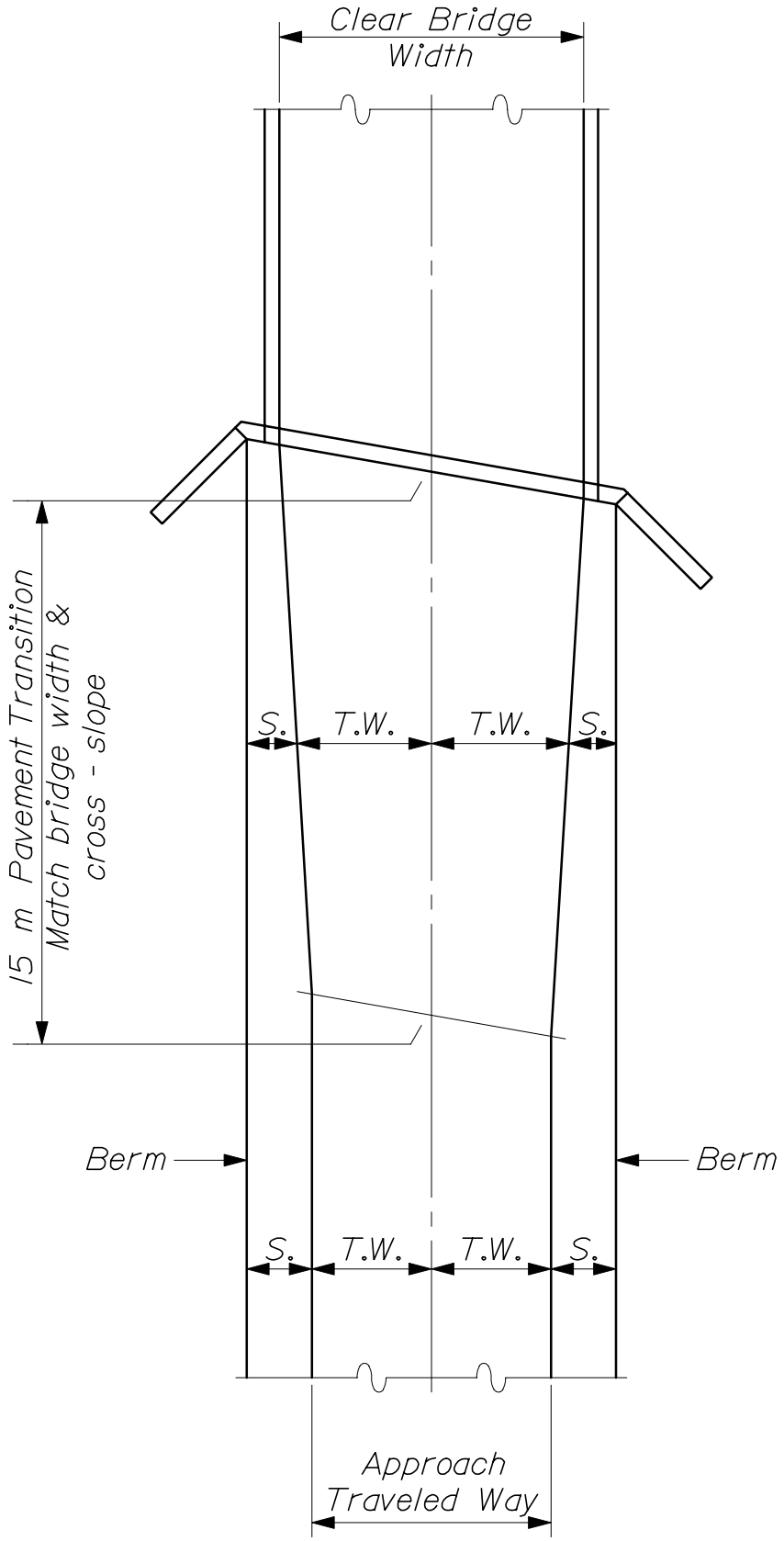

PAVEMENT TRANSITION AT BRIDGE

801(10)

GENERAL NOTES

1. When the sidewalk is less than 1 500 mm in width, a minimum pad 1 500 mm x 1 500 mm sloping no more than 2% shall be provided whenever a change in direction must be made.

2. There shall be a minimum of 300 mm Aggregate Subbase Course-Gravel under the 50 mm pavement on pedestrian ramps.

3. Curb openings for pedestrian ramps shall be 1 800 mm minimum.

PEDESTRIAN RAMP NOTES

801(11)

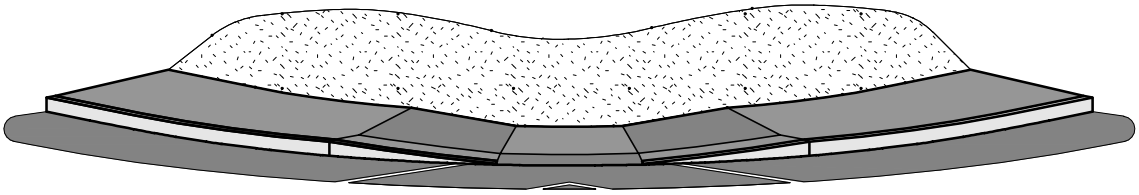

PERSPECTIVE VIEW
(not to scale)

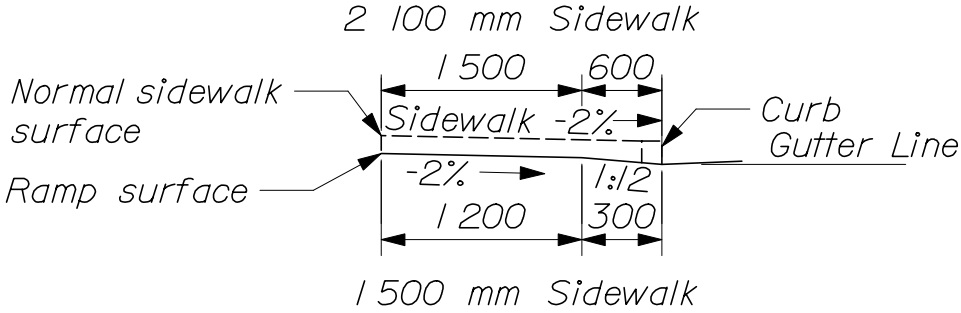

SECTION A-A

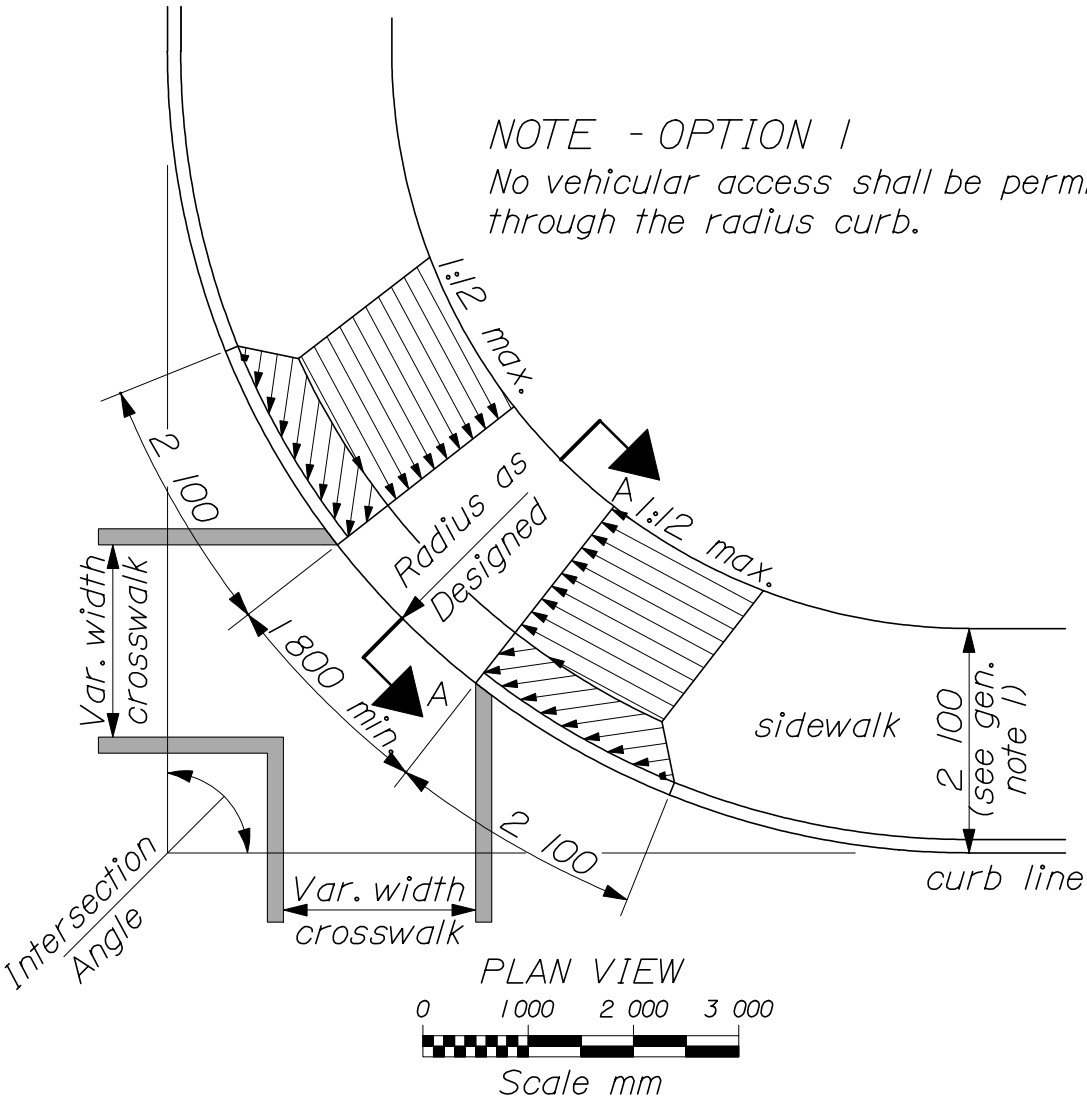

PEDESTRAIN RAMP - OPTION 1

801(12)

PEDESTRIAN RAMPS - OPTION 2

80(13)

NOTES - OPTION 2

The desireable distance "D" is the tangent distance of the curb radius plus 2 100 mm. When local conditions do not permit the use of this distance the distances shown in the table below may be used:

These distances shall be used when the radius is equal to or less than 8.0 m when the radius exceeds 8.0 m the minimum distance "D" shall be the tangent minus 3.0 m.

Intersection Angle	Absolute Minimum "D"
90°	4.6 m
85°	4.9 m
80°	5.5 m
75°	6.1 m
70°	6.4 m
65°	7.3 m
60°	7.9 m

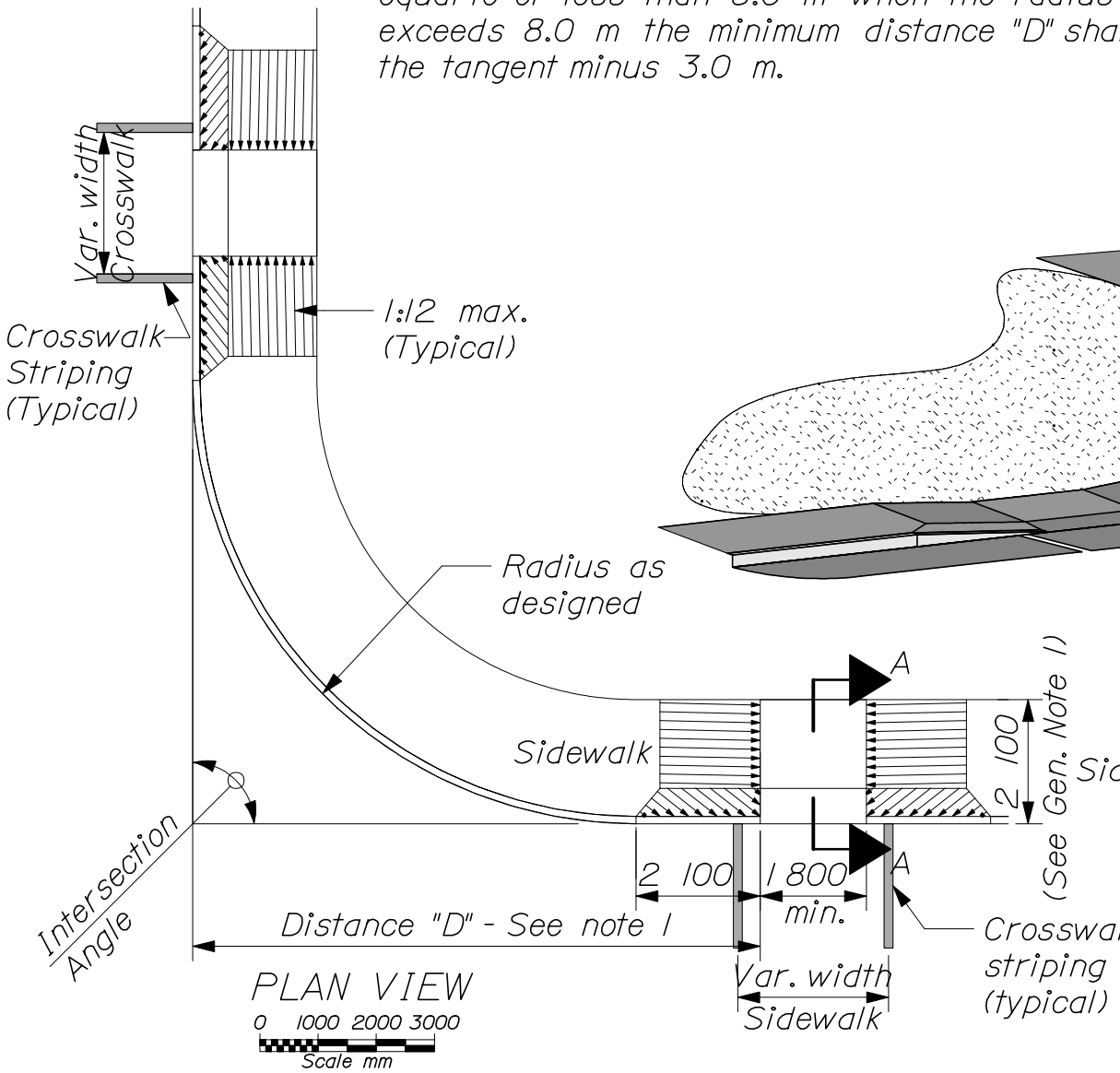

PLAN VIEW

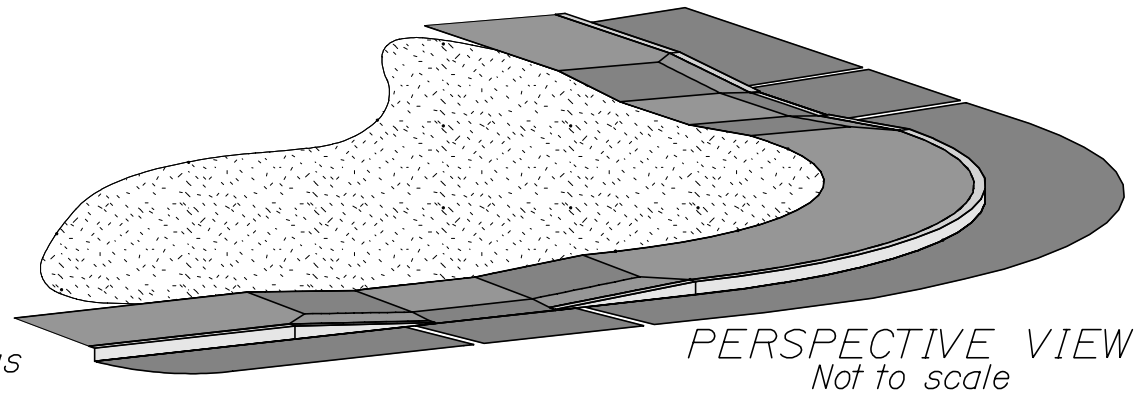

PERSPECTIVE VIEW
Not to scale

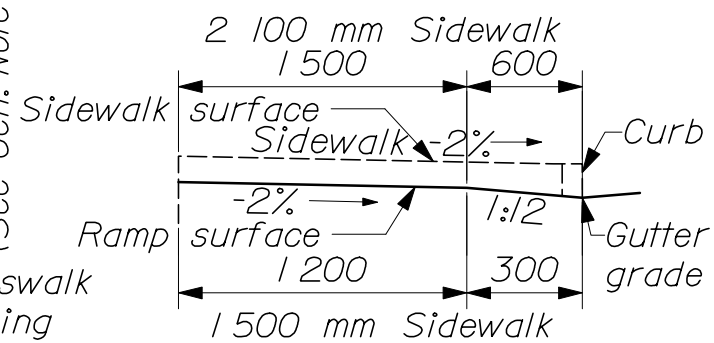

SECTION A-A
Not to scale

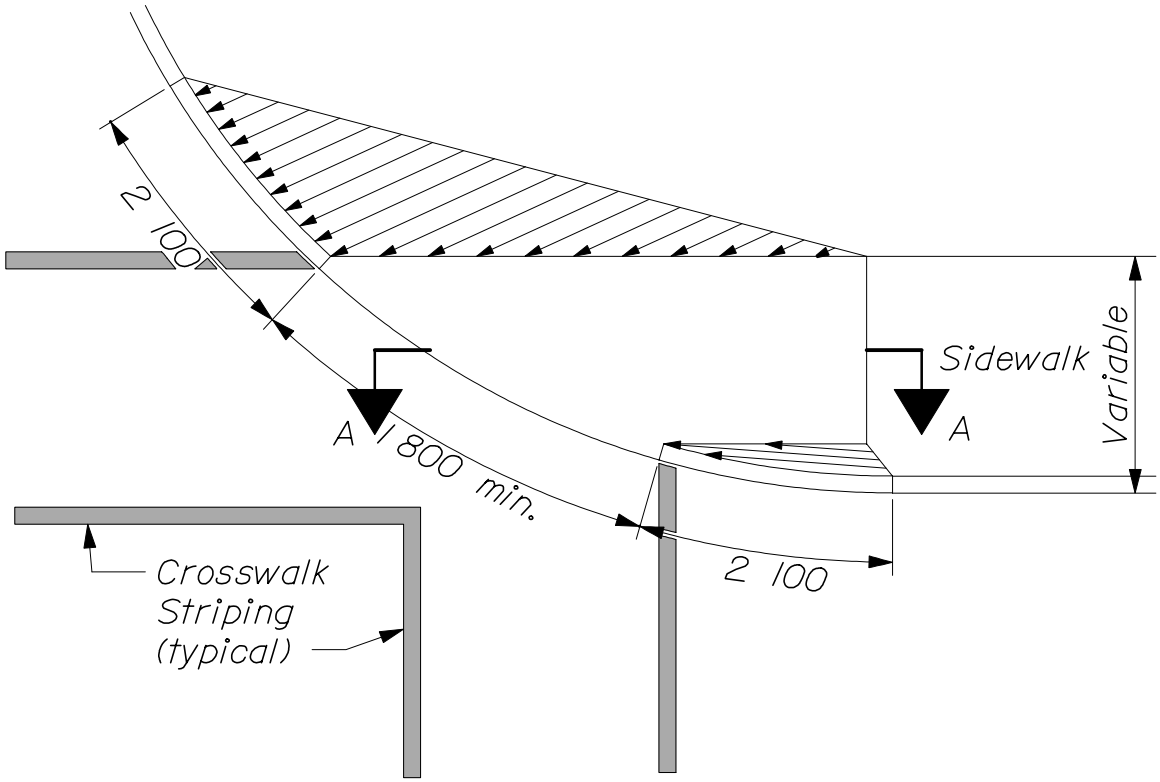

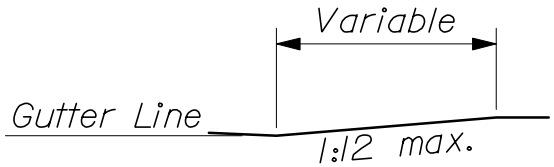

SECTION A-A

PEDESTRIAN RAMPS - OPTION 3

801(14)

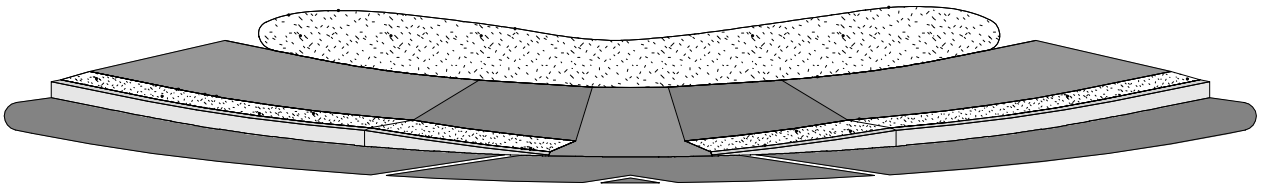

PERSPECTIVE VIEW
Not to scale

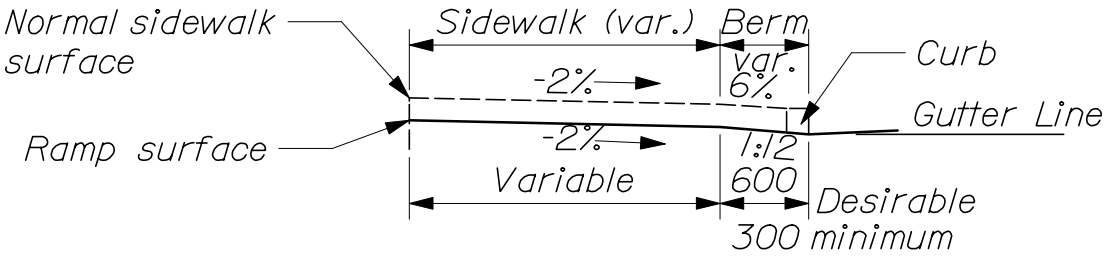

SECTION A-A

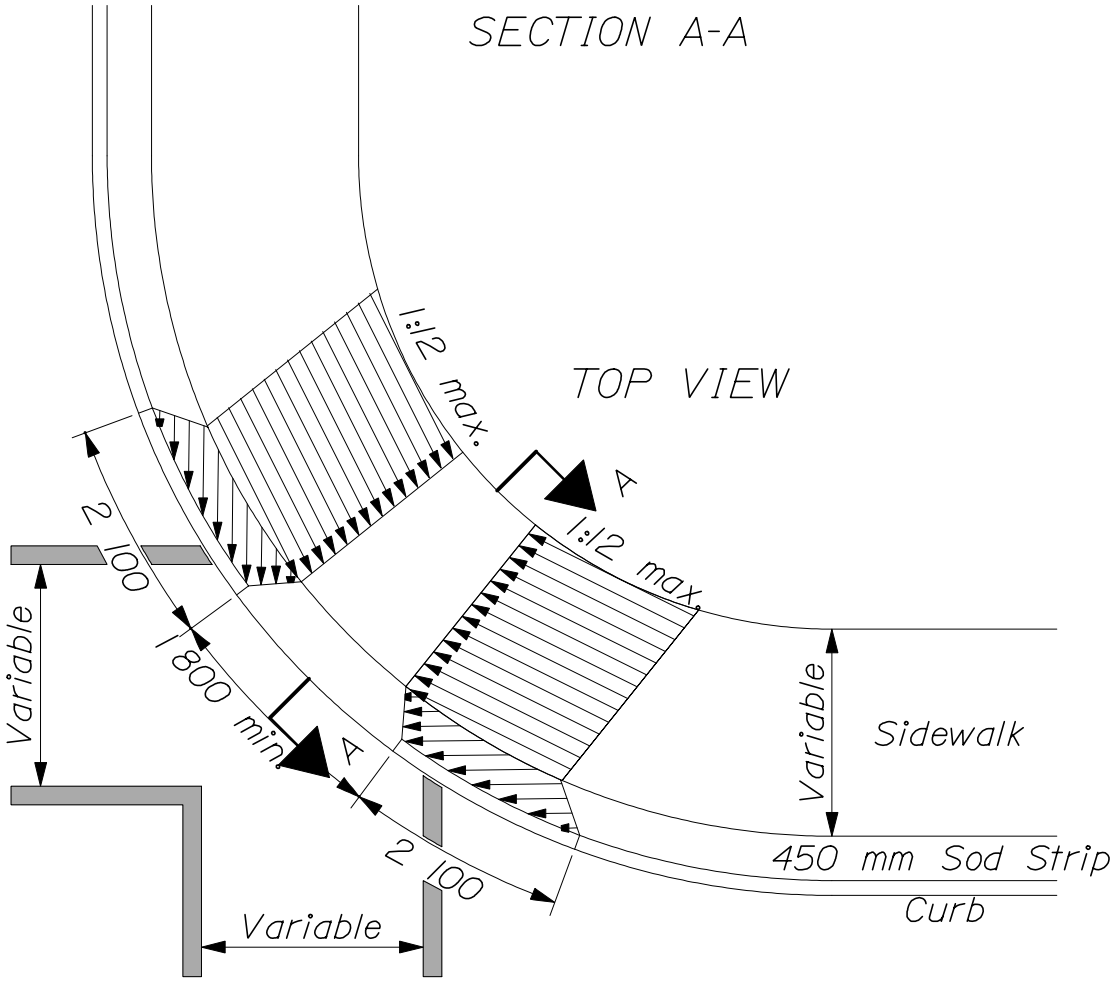

TOP VIEW

PEDESTRIAN RAMP WITH BERM

801(15)

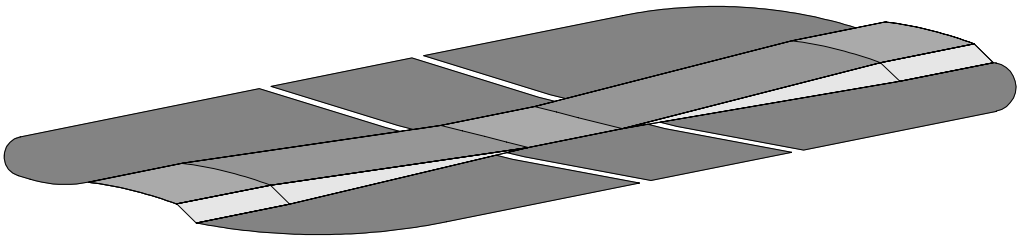

PERSPECTIVE VIEW
Not to scale

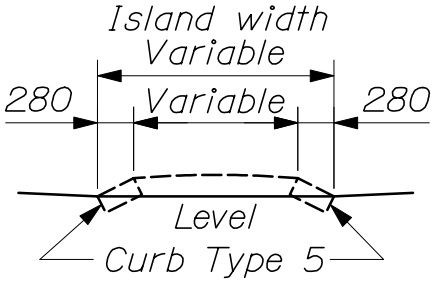

SECTION A-A

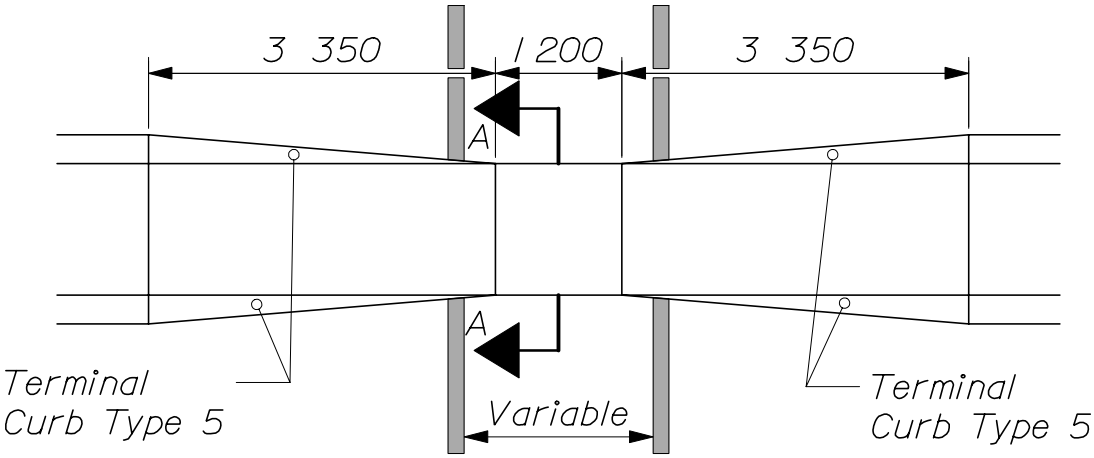

TOP VIEW

PEDESTRIAN RAMP
ISLAND - CURB TYPE 5

801(16)

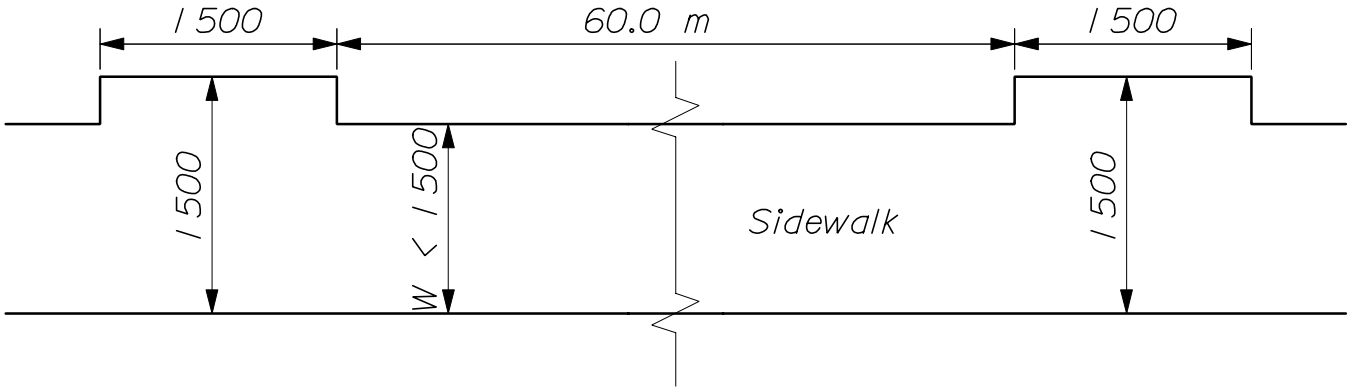

Sidewalks less than 1 500 mm in width require a
1 500 mm x 1 500 mm passing area every 60.0 m.

PEDESTRIAN PASSING AREAS

801(17)

Dimensions are in mm unless noted.

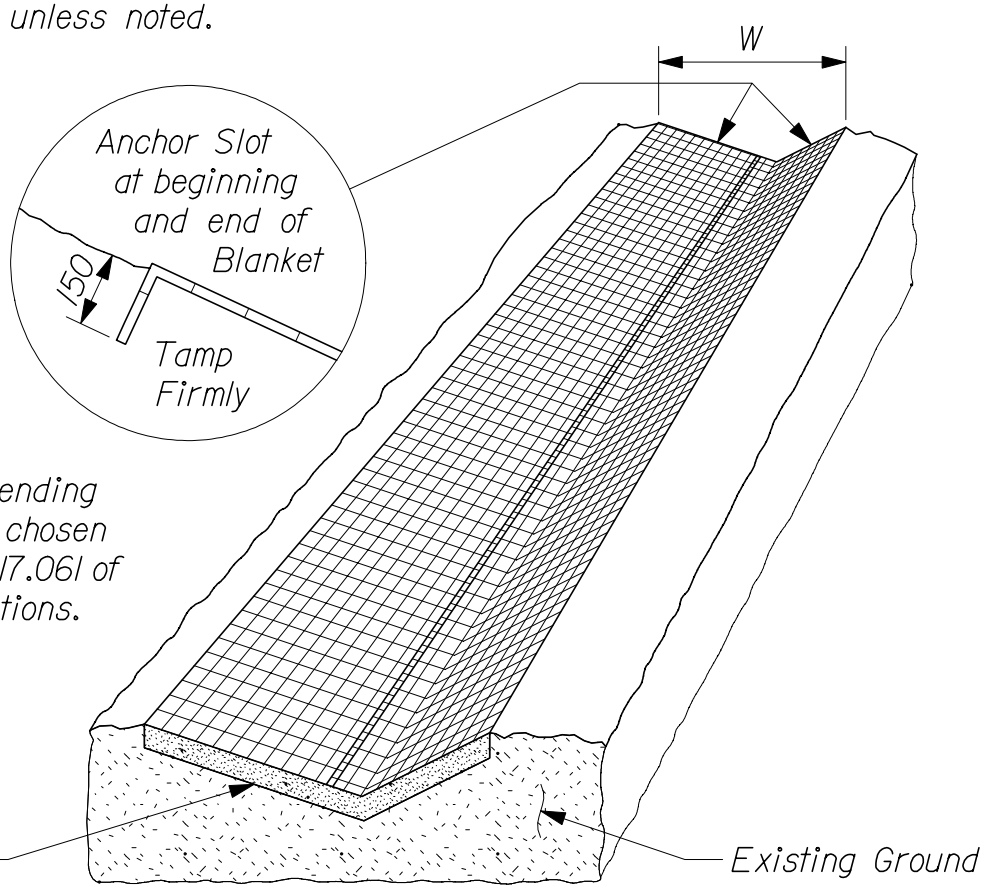

NOTE:
Width (W) may vary depending on the type of material chosen for use. See Section 717.0611 of the Standard Specifications.

-- PERSPECTIVE VIEW --

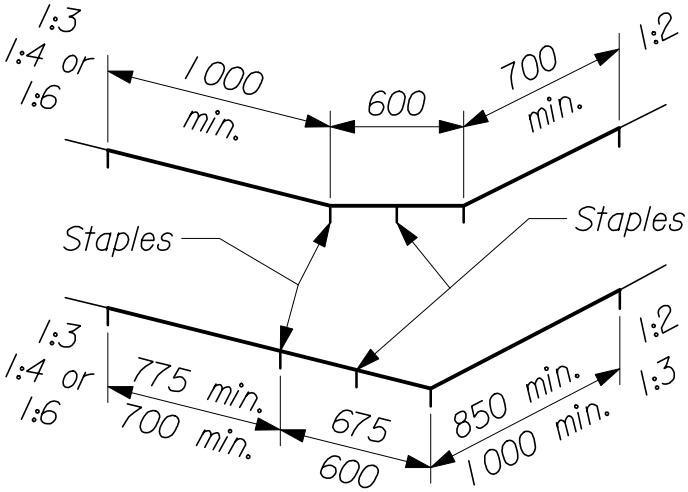

-- STAPLE LOCATIONS --

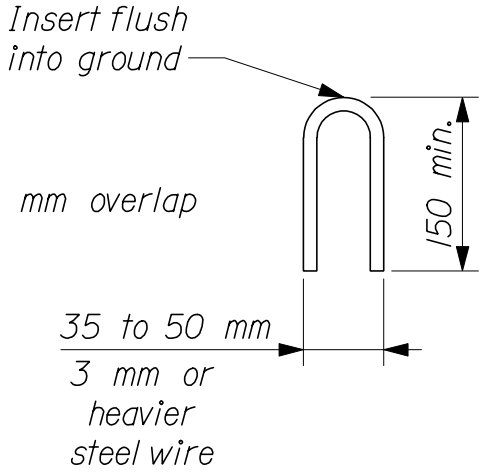

-- WIRE STAPLE --

NOTE:
Staple spacing shall be at 900 mm C/C along blanket except at 100 mm overlap which shall be at 450 mm C/C or as directed by the manufacturer.

REF: Best Mngmt. Practices for Erosion and Sediment Control - Erosion Control Blankets

DITCH APPLICATIONS

802(01)

Dimensions are in mm unless noted.

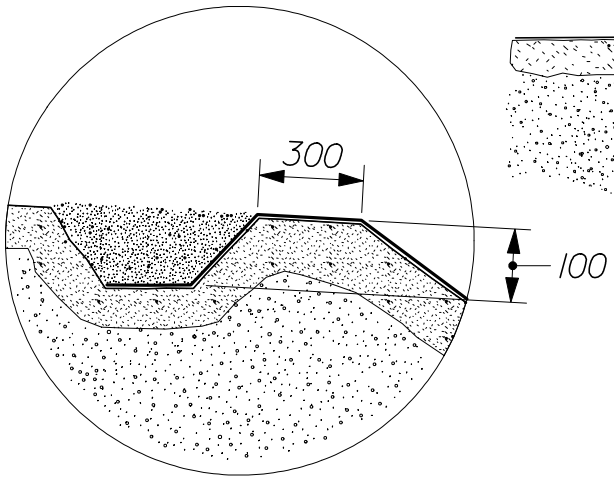

Detail "A" - Anchor Trench

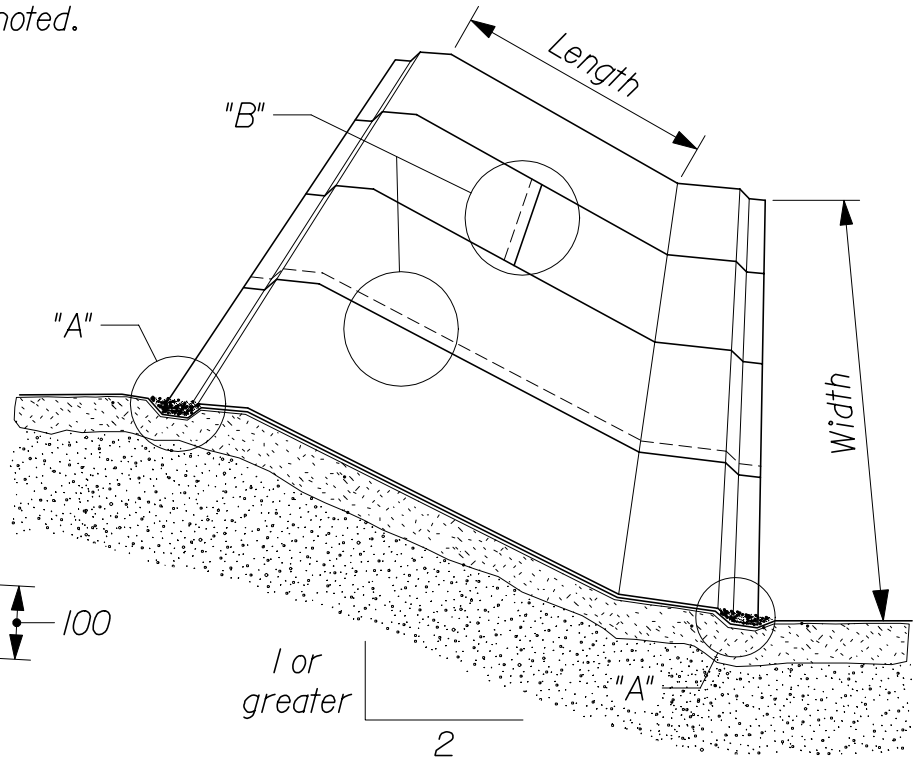

-- STEEP SLOPES --

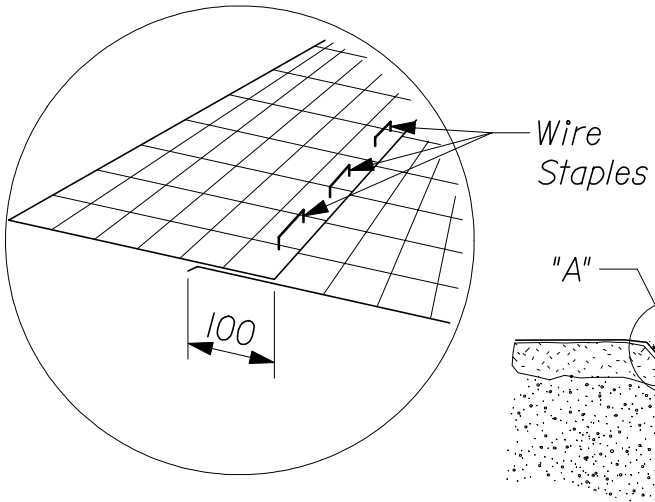

Detail "B" - Lap Joint

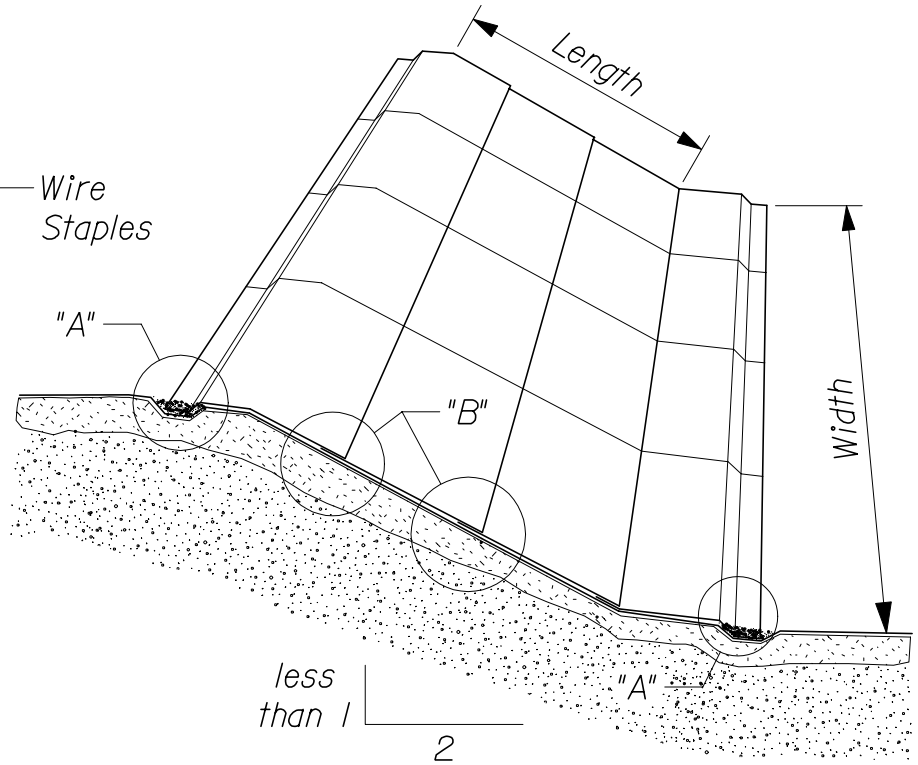

-- FLATTER SLOPES --

REF: Best Mngmt. Practices for Erosion and Sediment Control - Erosion Control Blankets

SLOPE APPLICATION

802(02)

Dimensions are in mm unless noted.

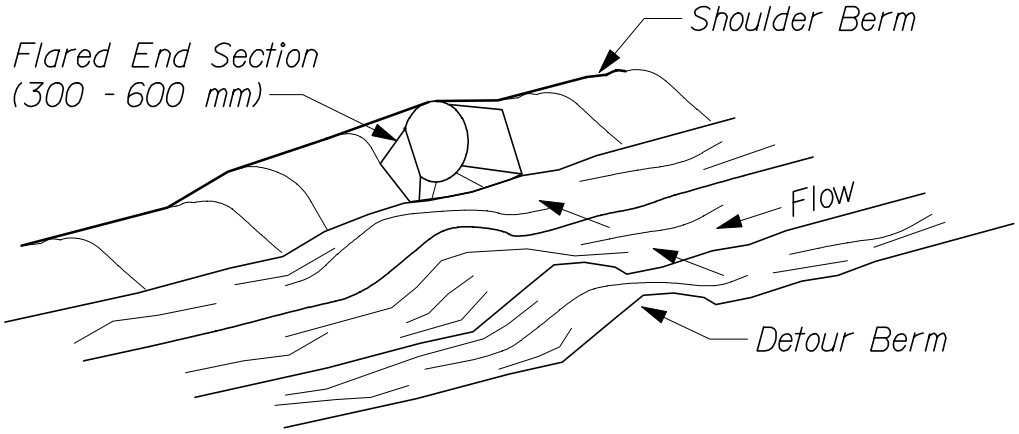

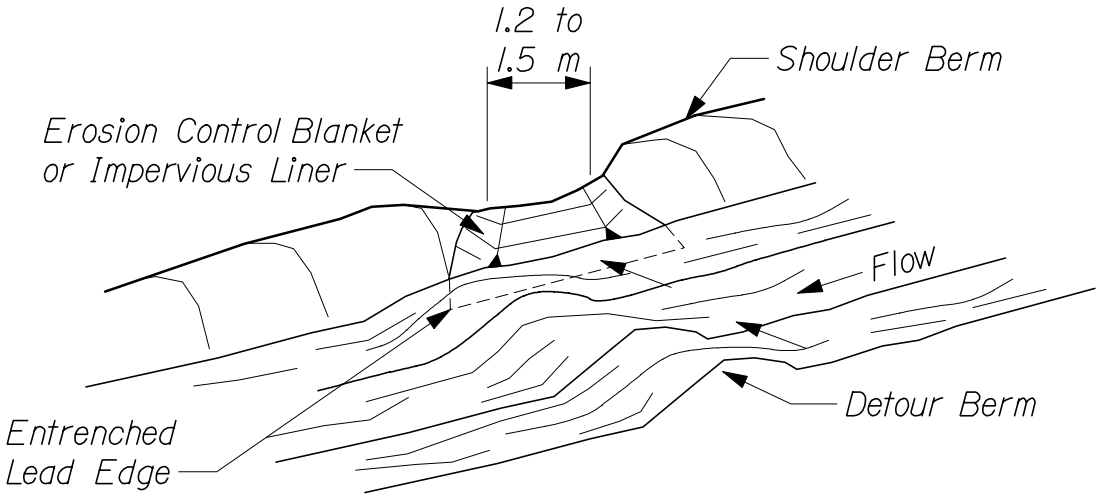

-- SLOPE DRAIN INLETS --

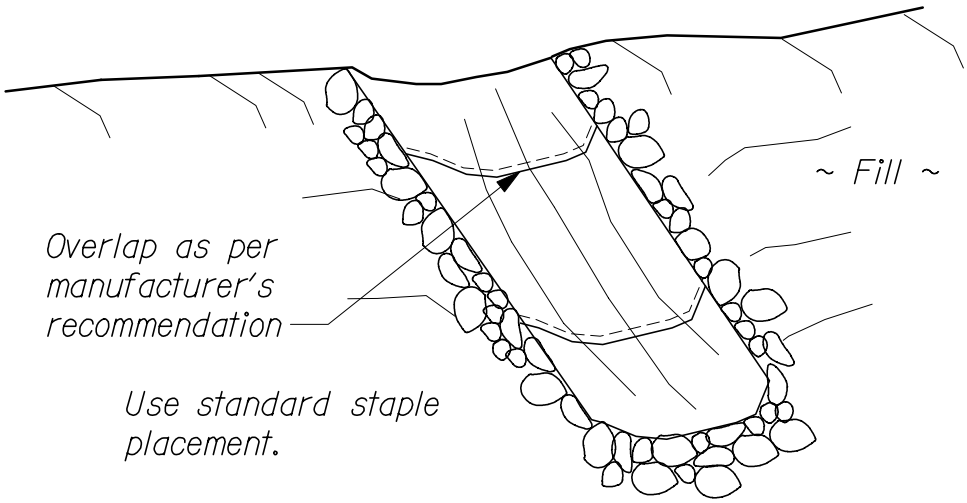

-- DITCH LINER: EROSION CONTROL BLANKET --
(or Impervious Liner)

REF: Best Mngmt. Practices for Erosion and Sediment Control - Temporary Slope Drains

TEMPORARY SLOPE DRAINS

802(03)

Dimensions are in mm unless noted.

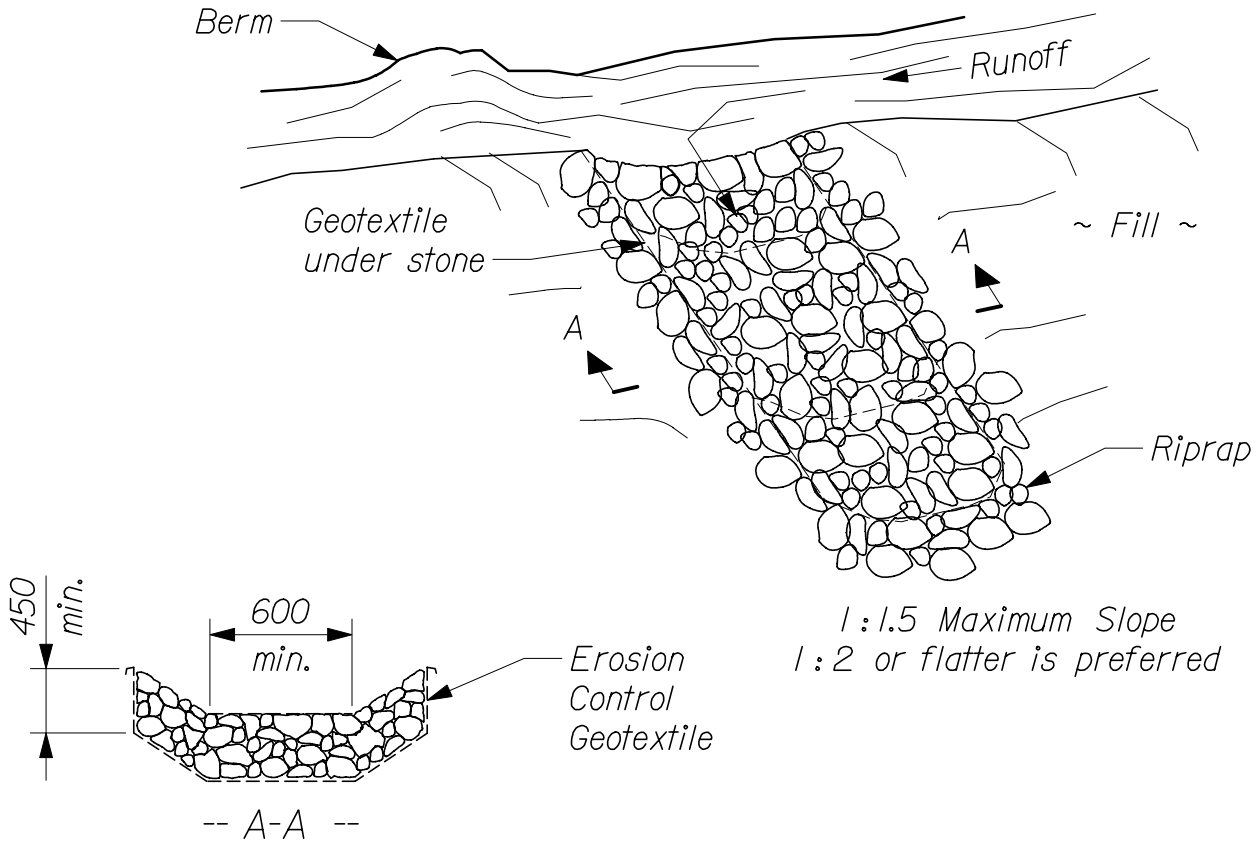

-- RIPRAP SLOPE DRAIN --

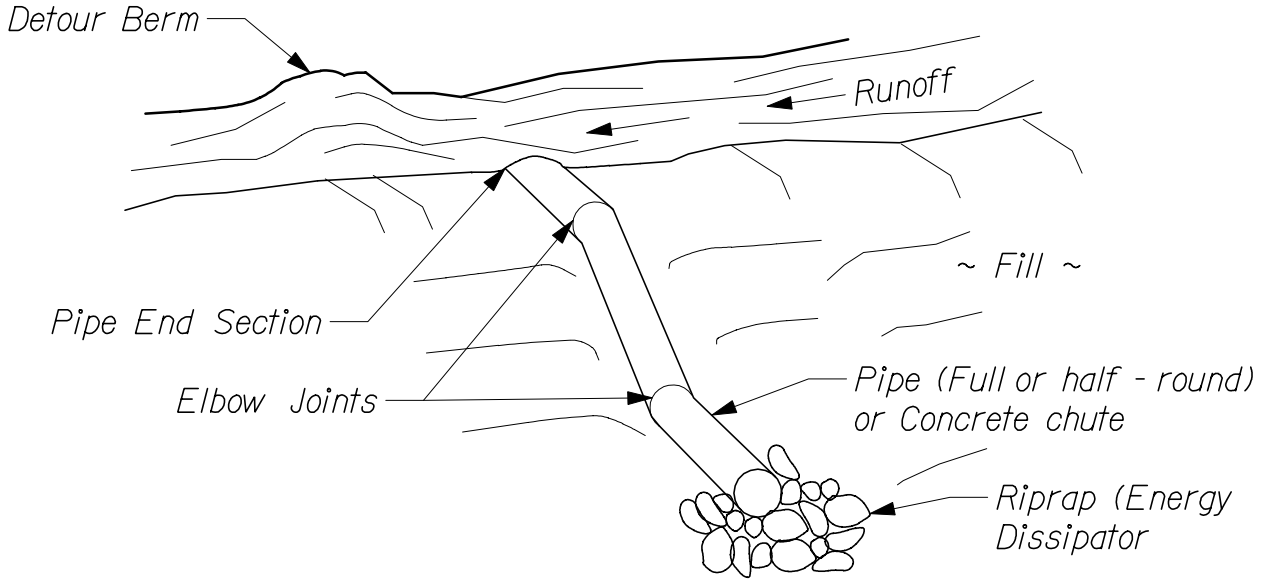

-- PIPE SLOPE DRAIN --

REF: Best Mngmt. Practices for Erosion and Sediment Control - Temporary Slope Drains

TEMPORARY SLOPE DRAINS

802(04)

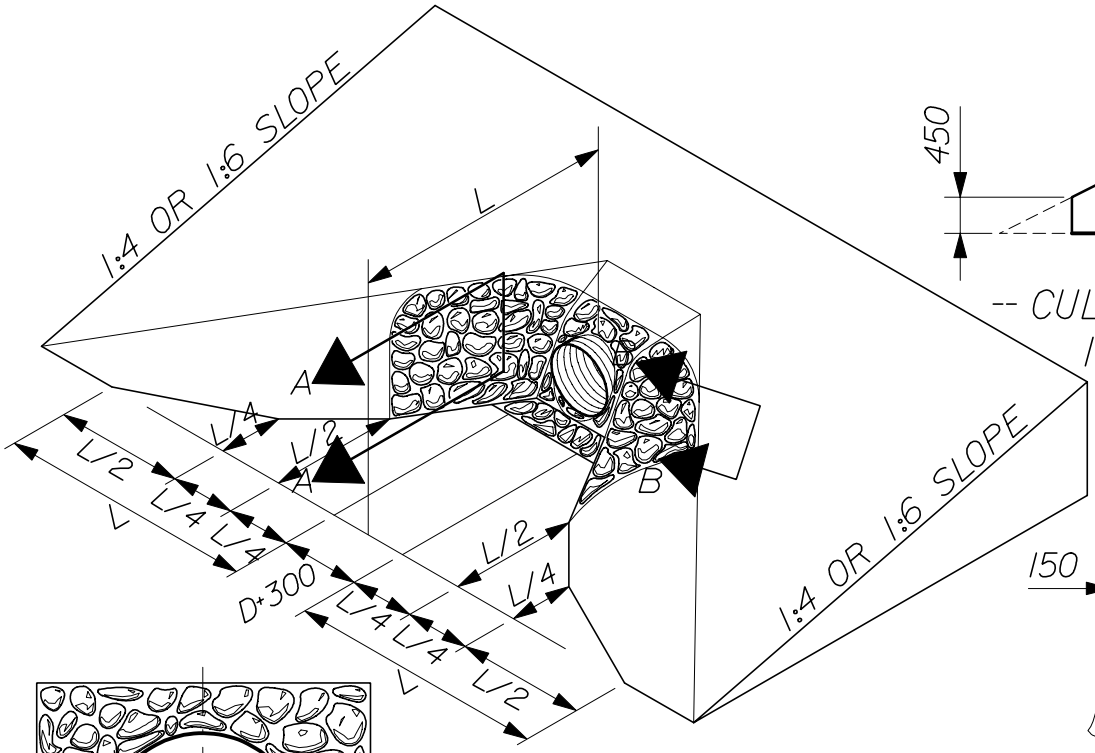

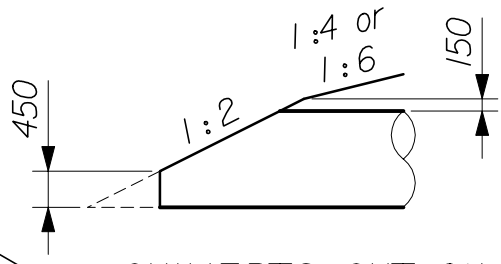

-- CULVERTS CUT ON 1:2 SLOPE --

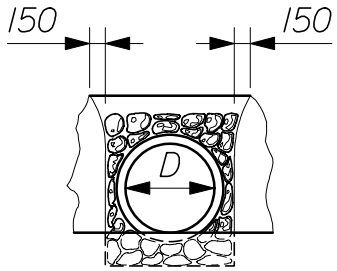

-- FRONT VIEW --

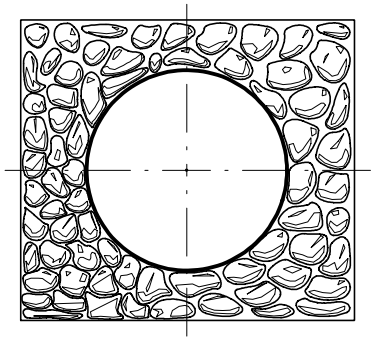

Install riprap 600 mm around diameter of pipe on 1:2 guardrail slopes

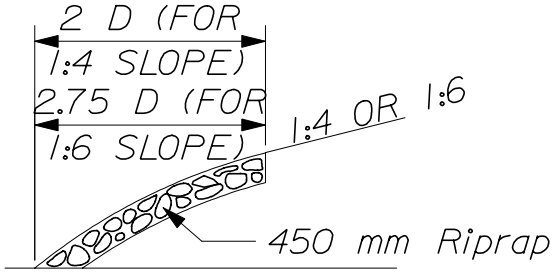

SECTION A-A
90° to Roadway ℄

TABLE B		
Culvert Diameter	"L" (m) 1:4 Slope	"L" (m) 1:6 Slope
450	2.7	3.9
525	3.0	4.5
600	3.3	5.0
750	3.9	6.0
900	4.6	6.9
1 050	5.2	7.8
1 200	5.8	8.8
1 350	6.7	9.8
1 500	7.3	10.8
1 650	7.9	11.8
1 800	8.7	12.8
2 100	9.9	14.7

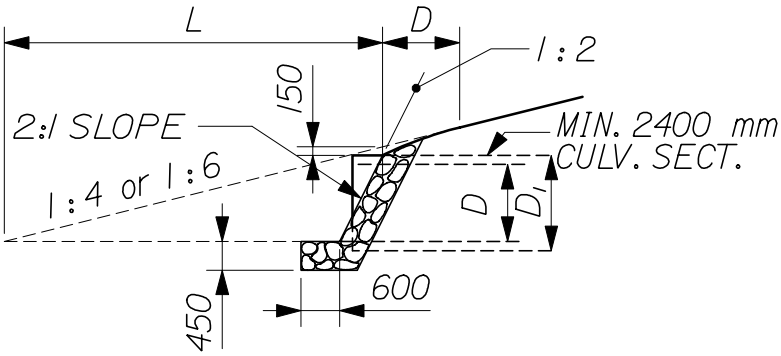

SECTION B-B

Notes:

1. The dimensions shown are approximate and may be modified in the field by the Resident.
2. Riprap will be required on portions of the culvert end treatment of 1:1 and steeper. The remaining portion shall be loamed, seeded and hay mulched as directed.
3. Culverts installed on 1:2 slopes shall have riprap laid on a 1:2 slope around the inlet and outlet.

REF: Best Mngmt. Practices for Erosion and Sediment Control - Culvert Inlet / Outlet Prot.

ROADWAY CULVERT END SLOPE TREATMENT

802(05)

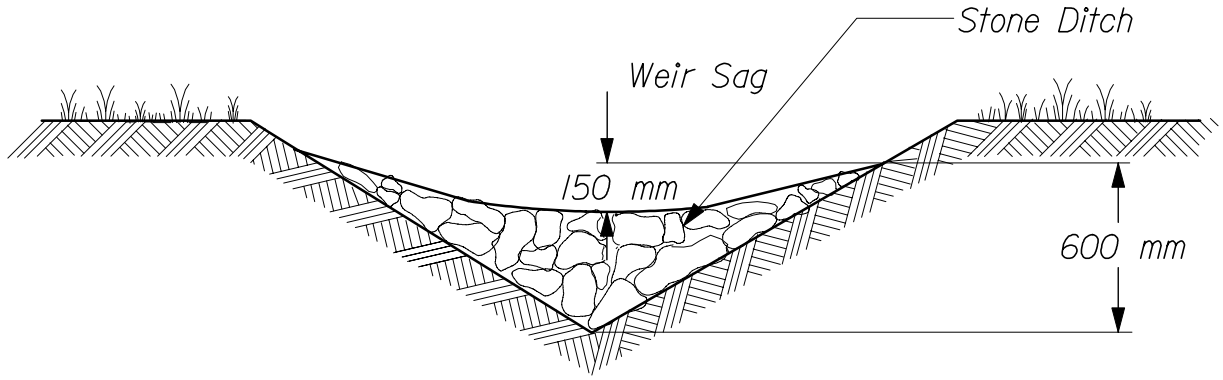

CROSS SECTION

V DITCH

DITCH SLOPE	PLACEMENT INTERVAL (S)
< 3%	30 m
3.5 %	22.5 m
> 5%	15 m

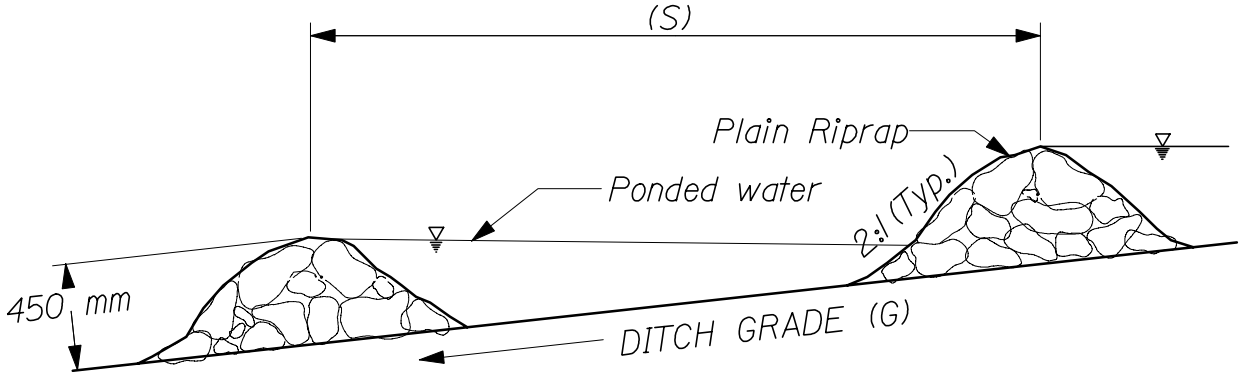

PROFILE @ DITCH

REF: Best Management Practice for Erosion and Sediment Control - Check Dam

DUMPED STONE CHECK DAM

802(06)

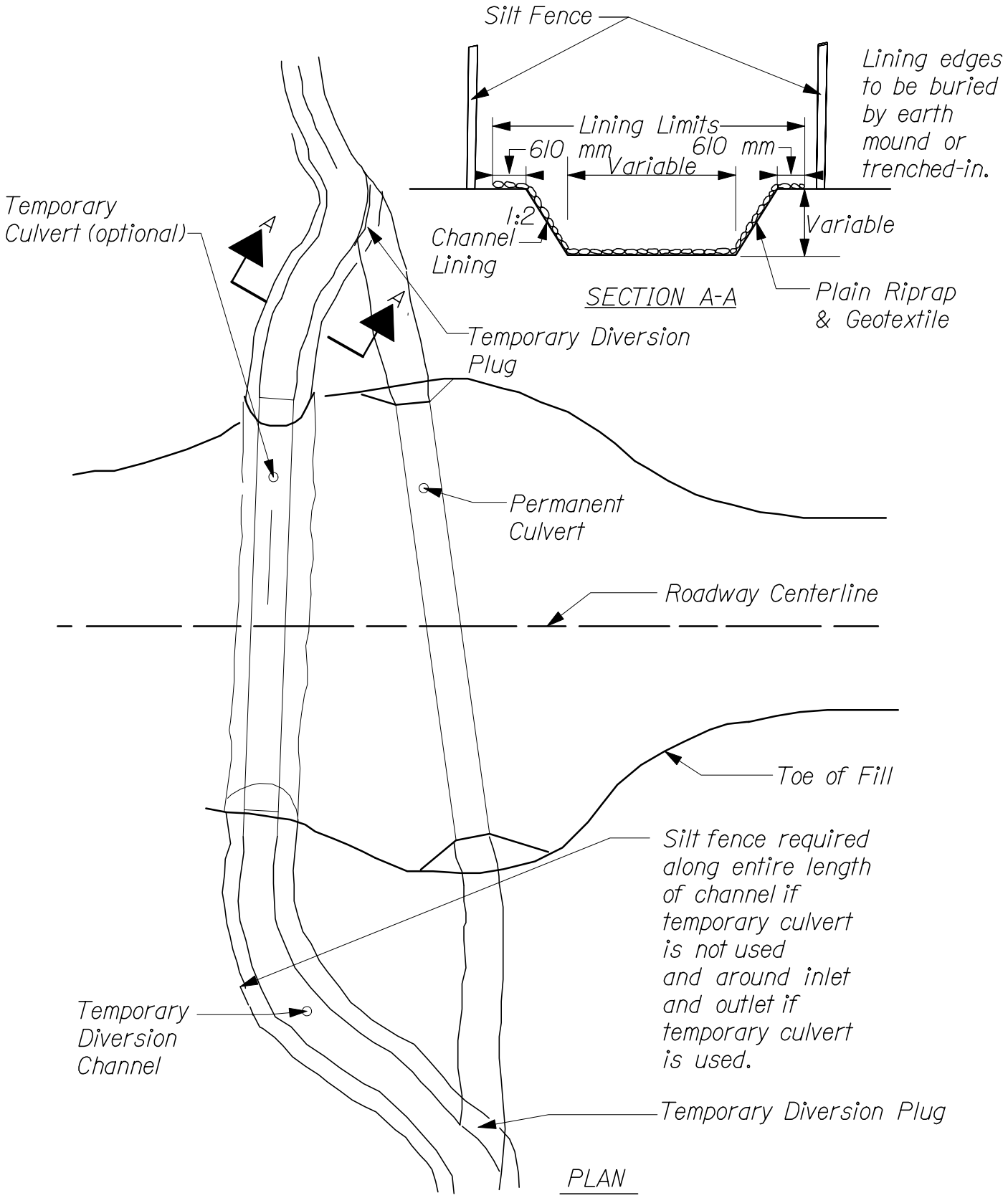

REF: Best Management Practice for Erosion and Sediment Control - Temporary Stream Diversion

TEMPORARY STREAM DIVERSION

802(07)

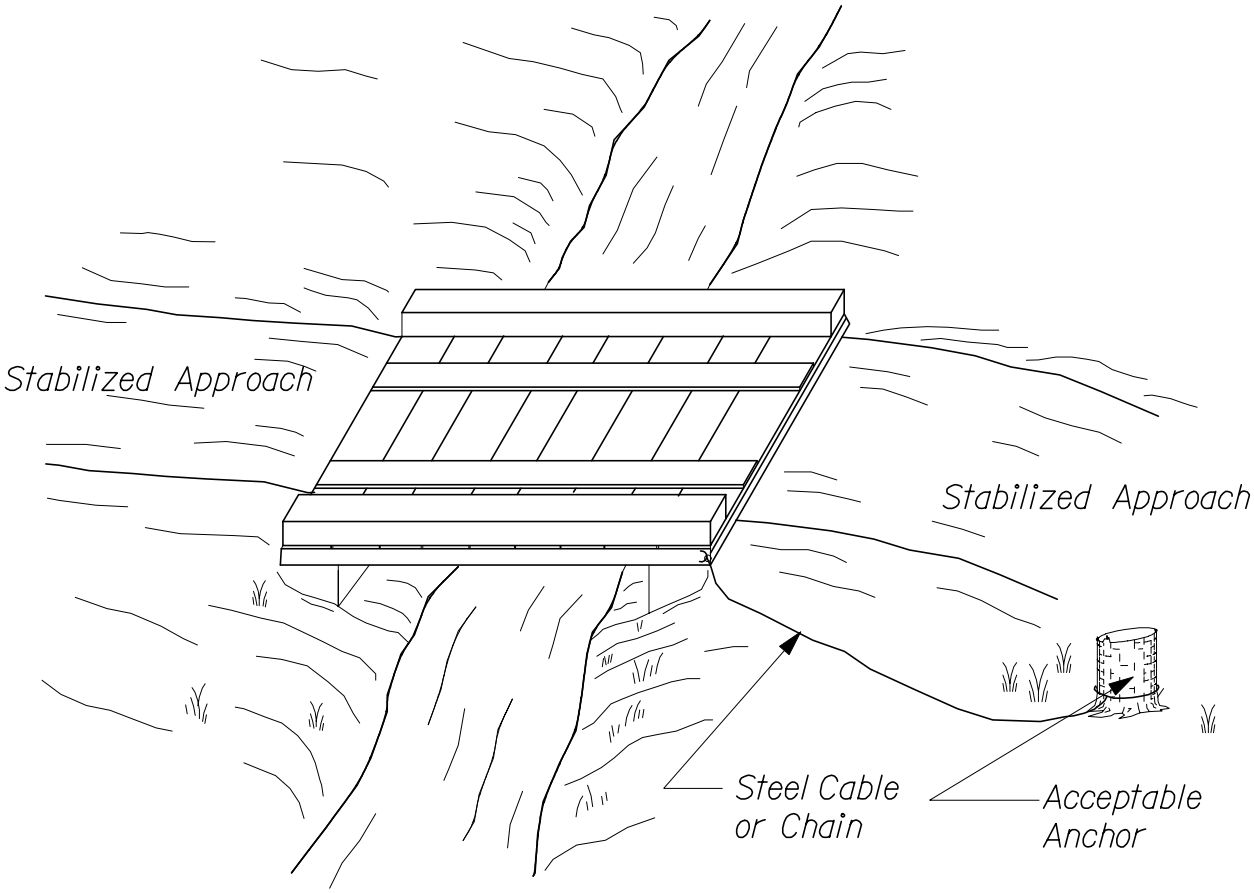

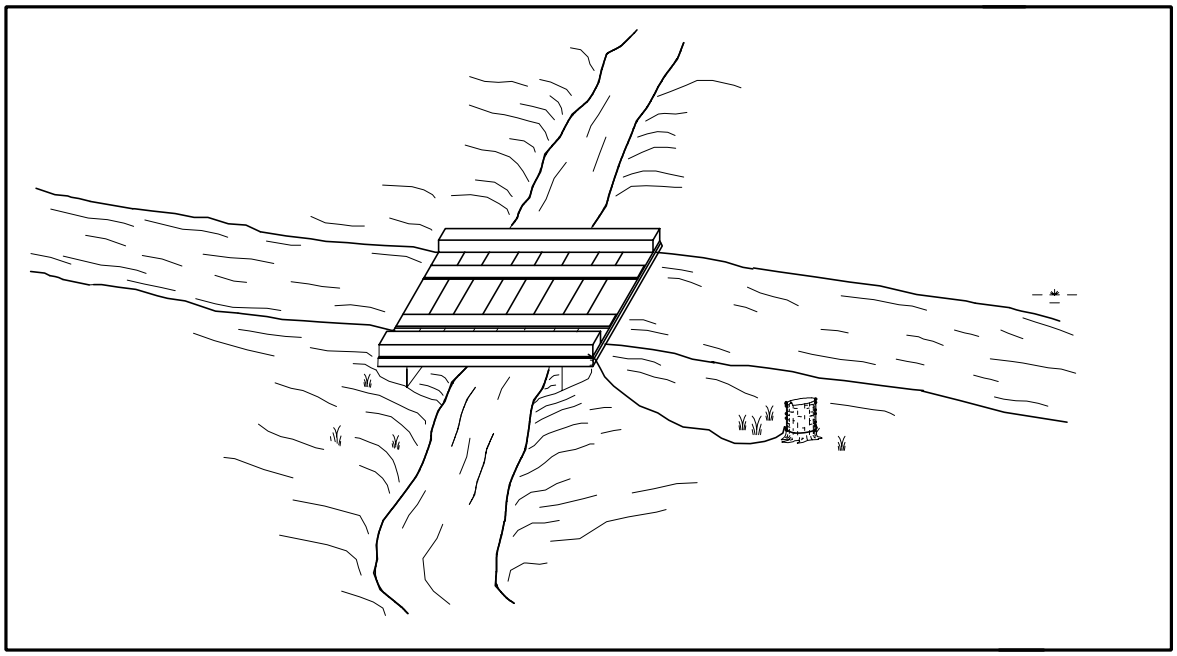

REF: Best Management Practice for Erosion and Sediment Control - Temporary Stream Crossing

TEMPORARY BRIDGE

802(08)

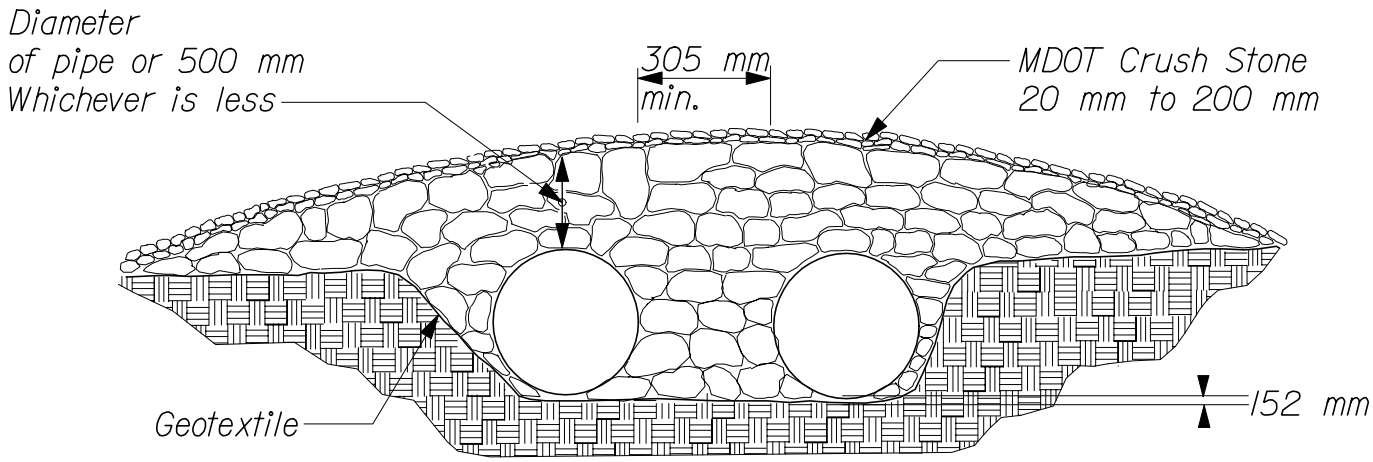

ELEVATION

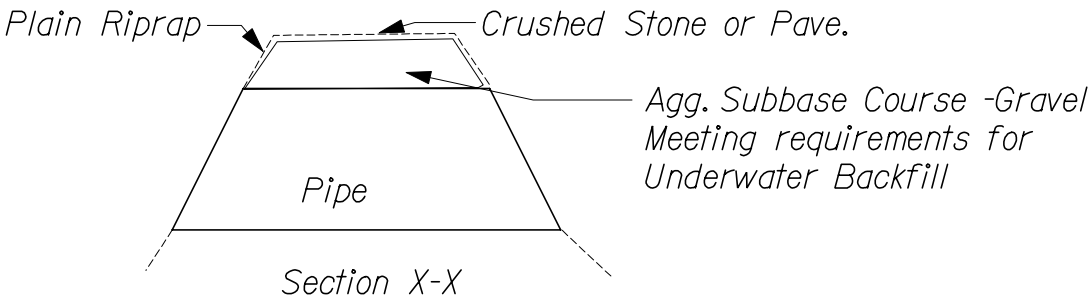

Section X-X

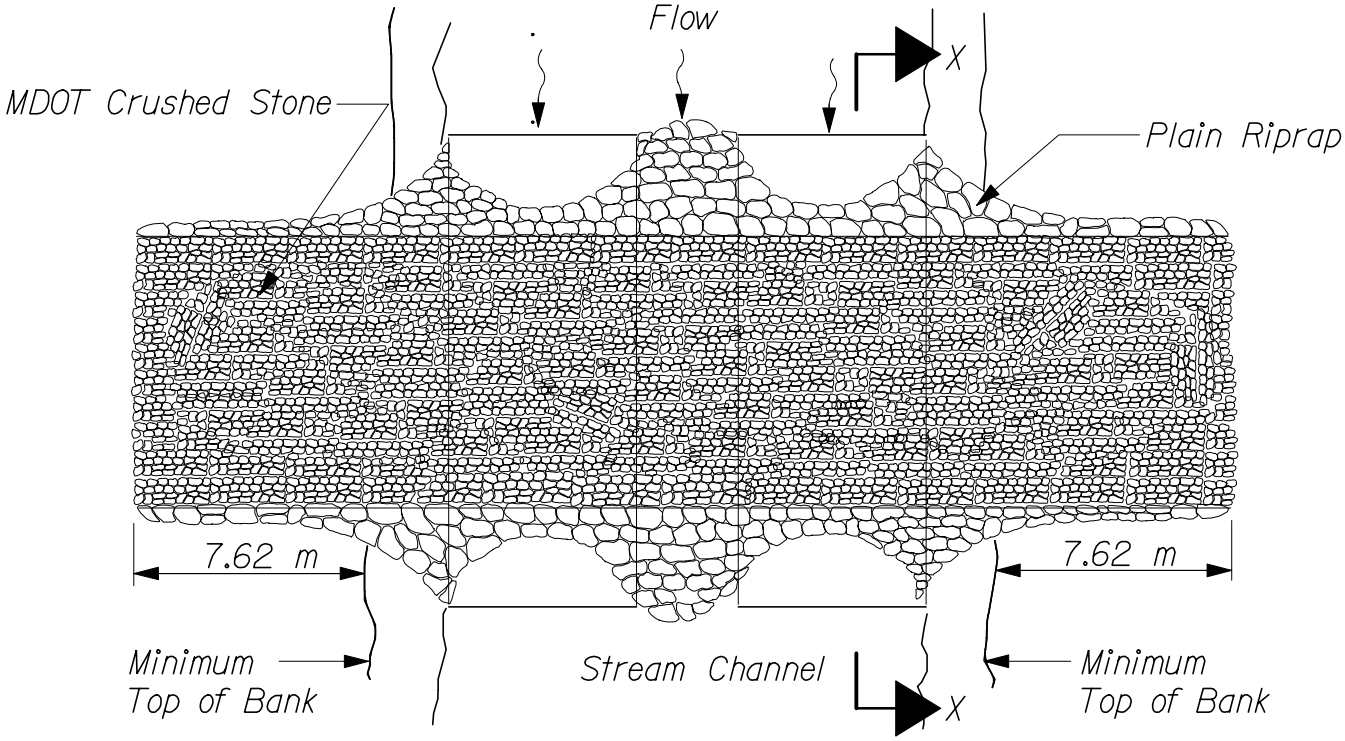

PLAN

REF: Best Management Practice for Erosion and Sediment Control - Temporary Stream Crossing

TEMPORARY CULVERT

802(09)

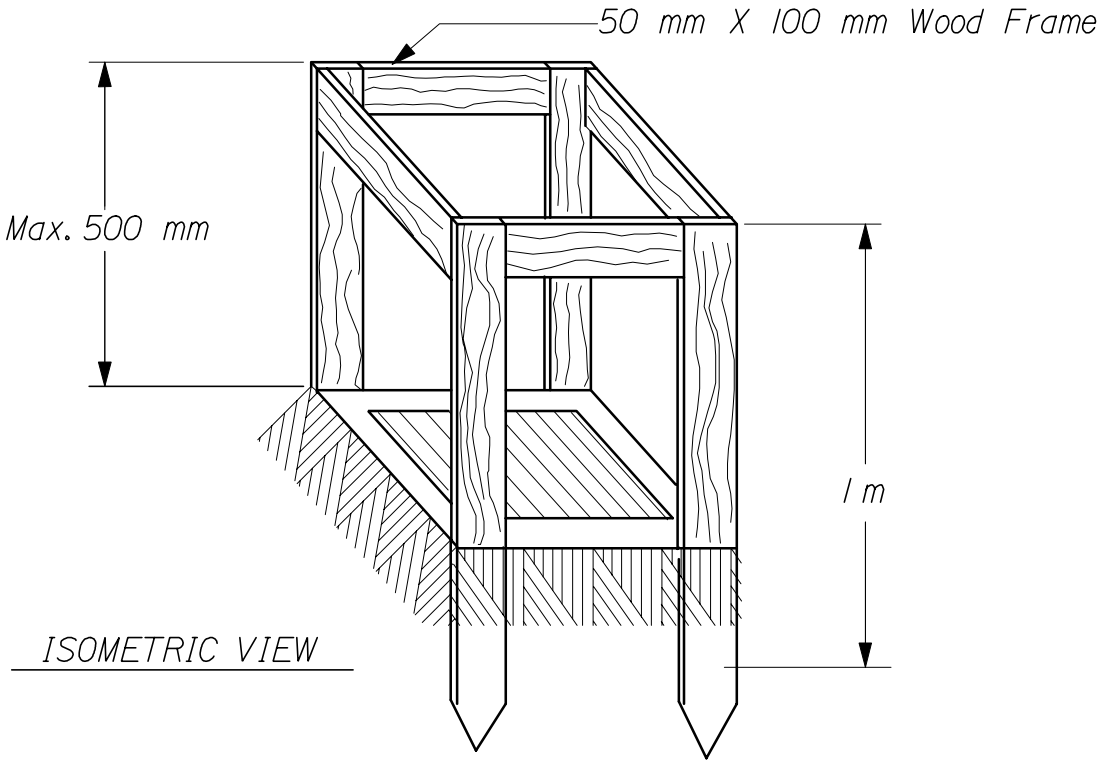

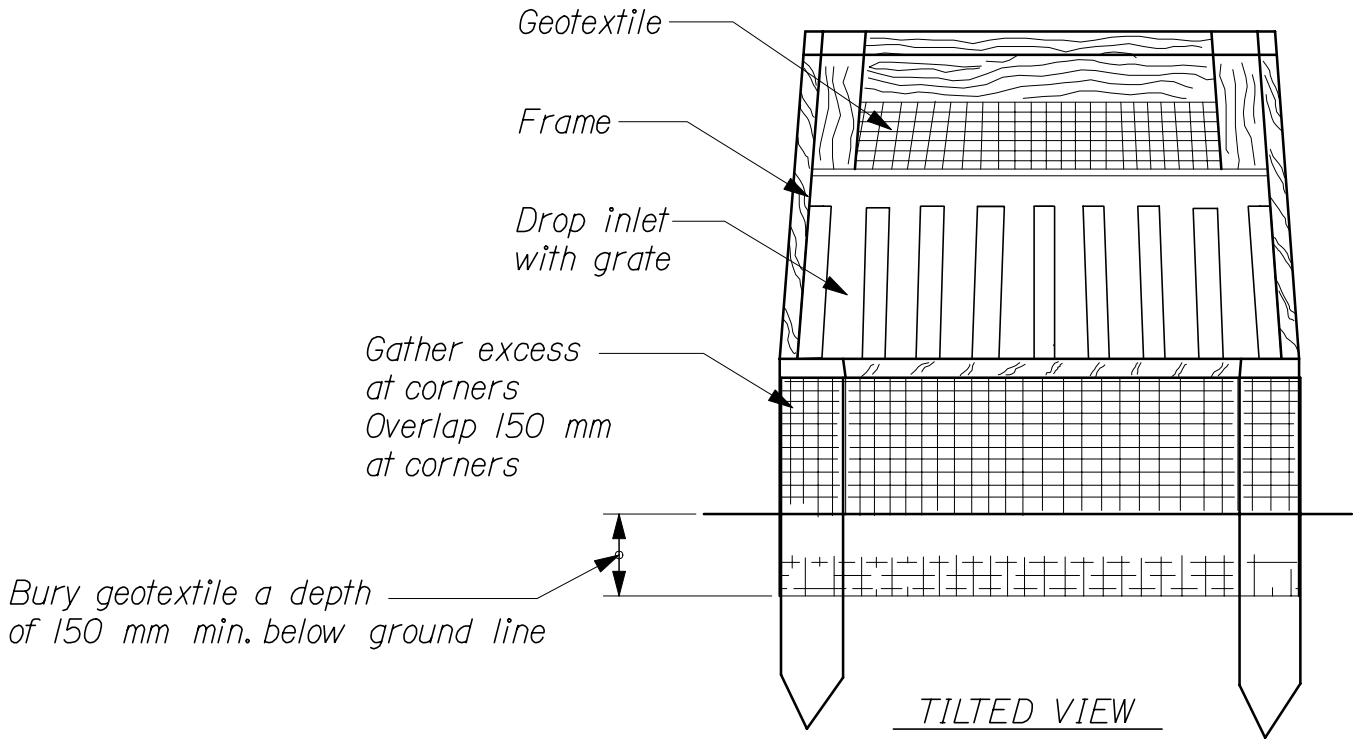

Note: Use Silt Fence inlet protection in sump locations only.
Sheet flow less than 0.4 Ha Drainage Area
Not in paved areas or with Concentrated flows

REF: Best Management Practice for Erosion and Sediment Control -
Storm Drain Inlet Protection

SILT FENCE CB/ INLET GRATE UNIT PROTECTION

802(10)

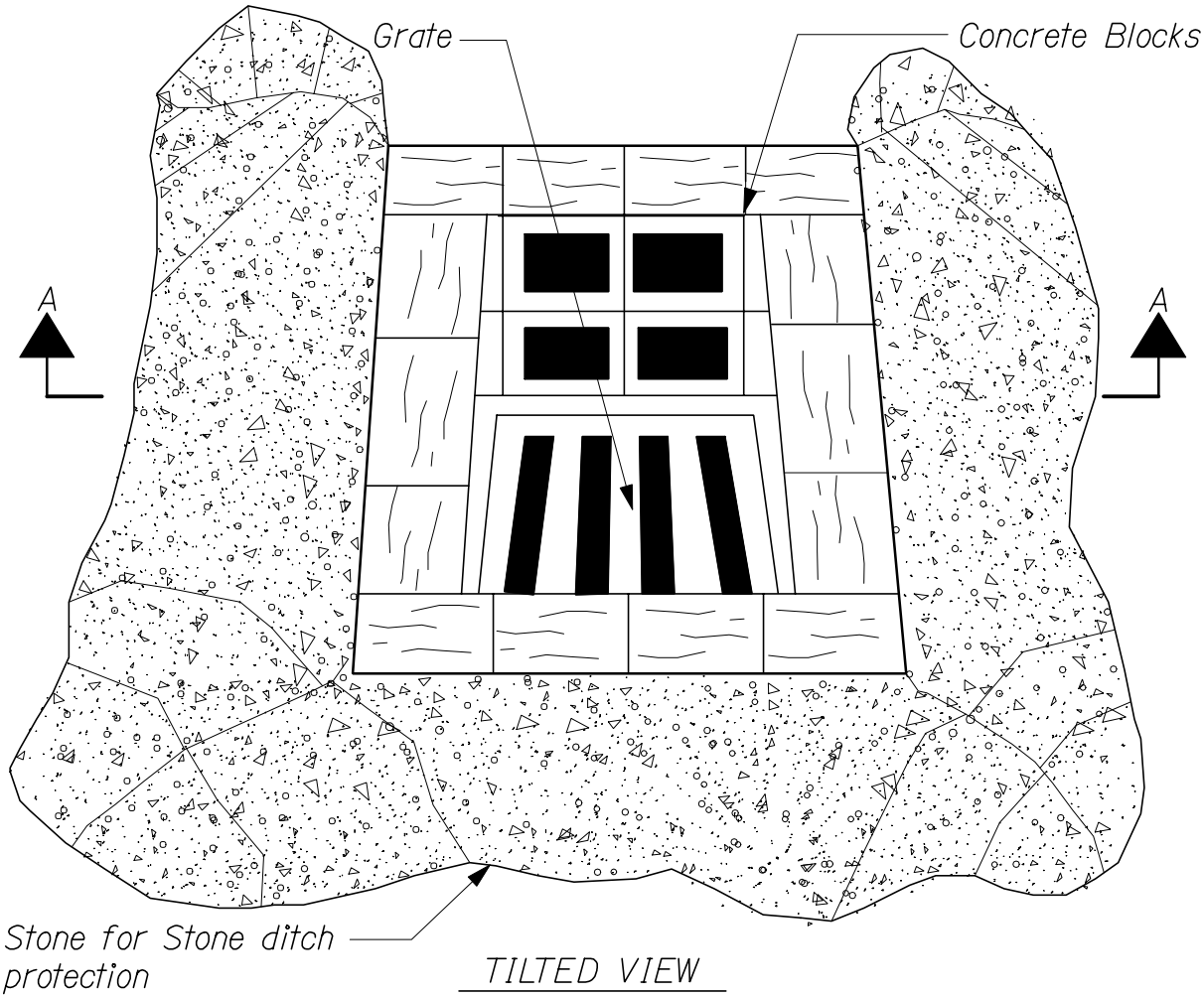

TILTED VIEW

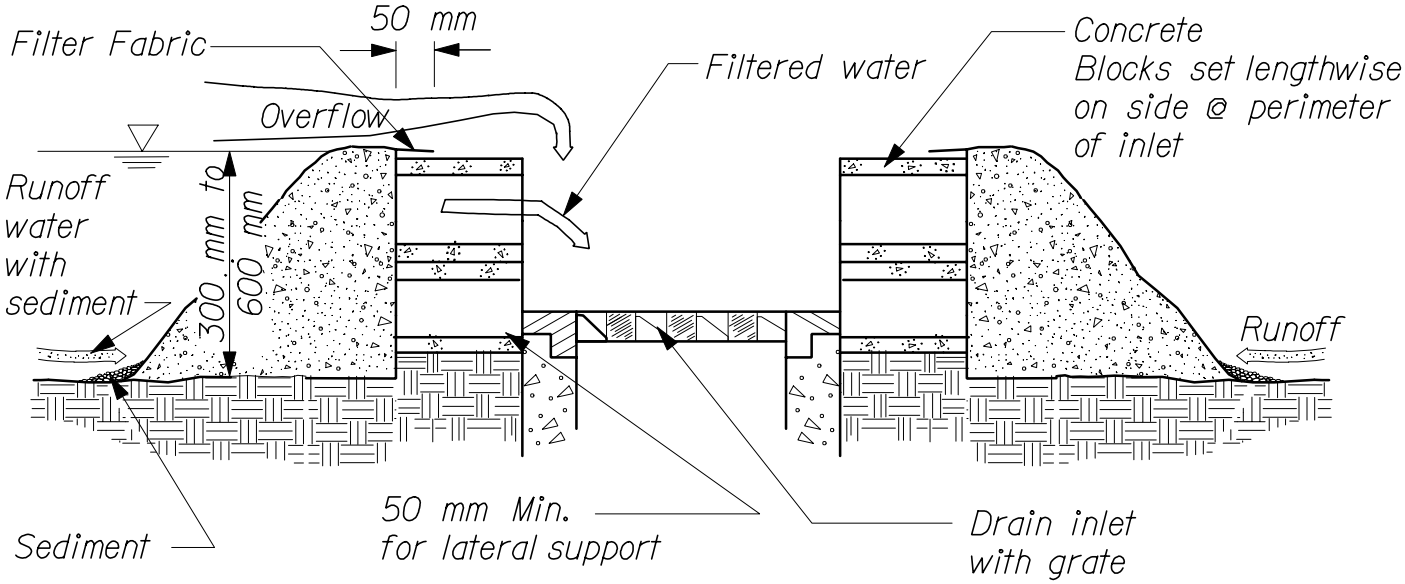

SECTION A-A

REF: Best Management Practice for Erosion and Sediment Control - Storm Drain Inlet Protection

BLOCK AND STONE CB/ INLET GRATE PROTECTION

802(II)

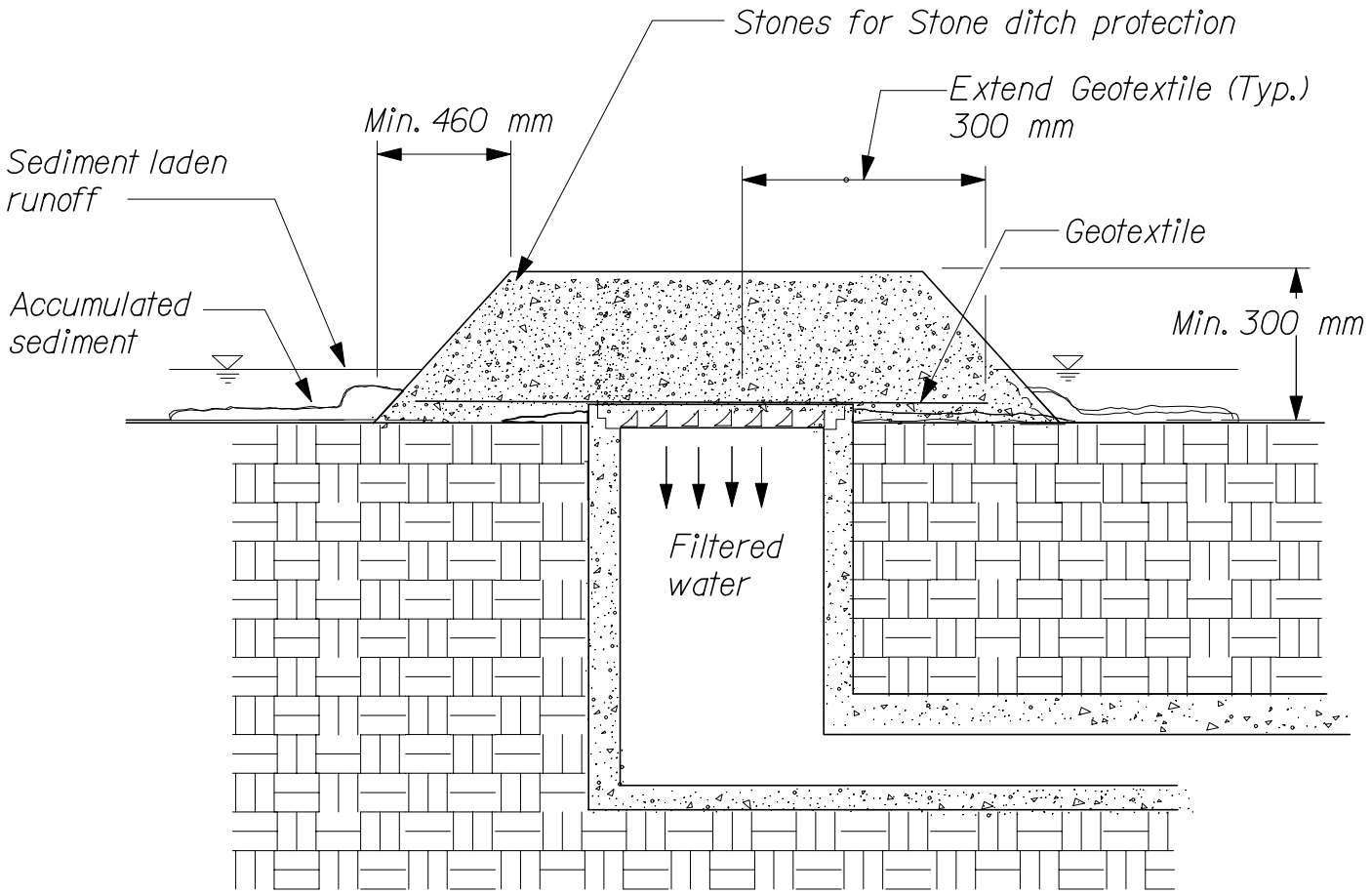

SECTION

Note: Use gravel and geotextile inlet protection only in sump locations where heavy concentrated flows are expected. Do not use where ponding around the structure might cause inconvenience or damage.

REF: Best Management Practice for Erosion and Sediment Control - Storm Drain Inlet Protection

GRAVEL & GEOTEXTILE CB/ INLET GRATE UNIT PROTECTION

802(12)

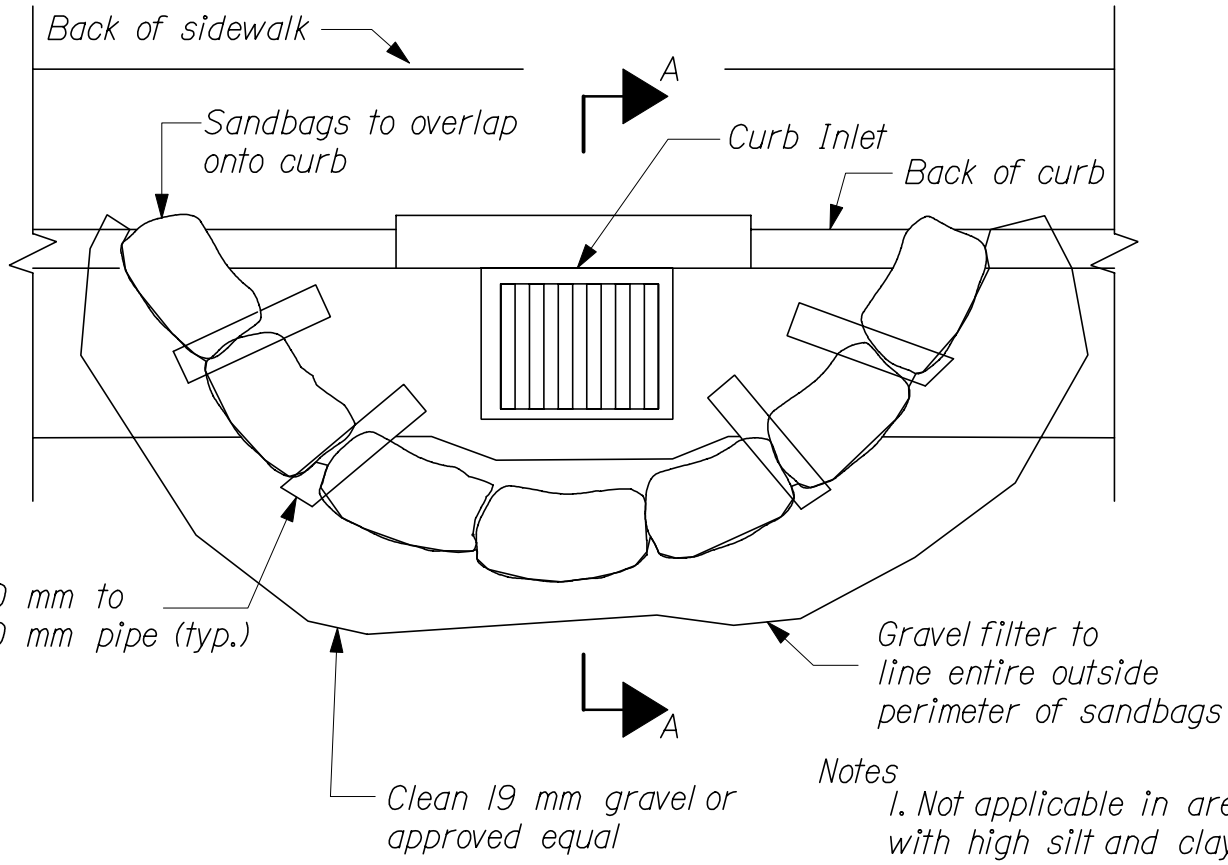

PLAN VIEW

Notes

1. Not applicable in areas with high silt and clays without filter fabric
2. Periodically remove and replace gravel. Old gravel may be used as backfill material if approved by the engineer.

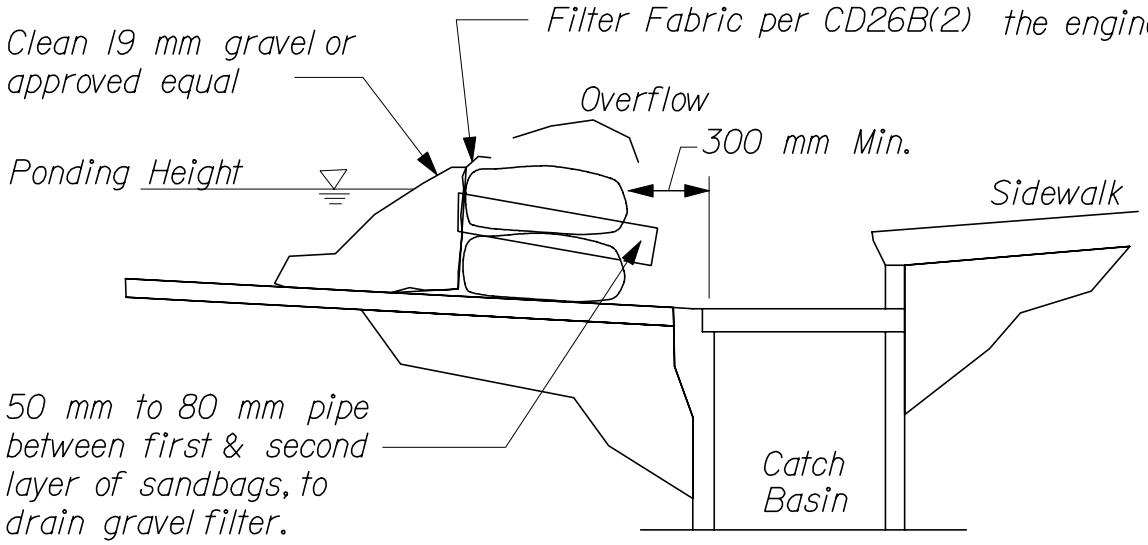

SECTION A-A

N.T.S.

REF: Best Management Practice for Erosion and Sediment Control - Storm Drain Inlet Protection

STORM DRAIN INLET PROTECTION

802(13)

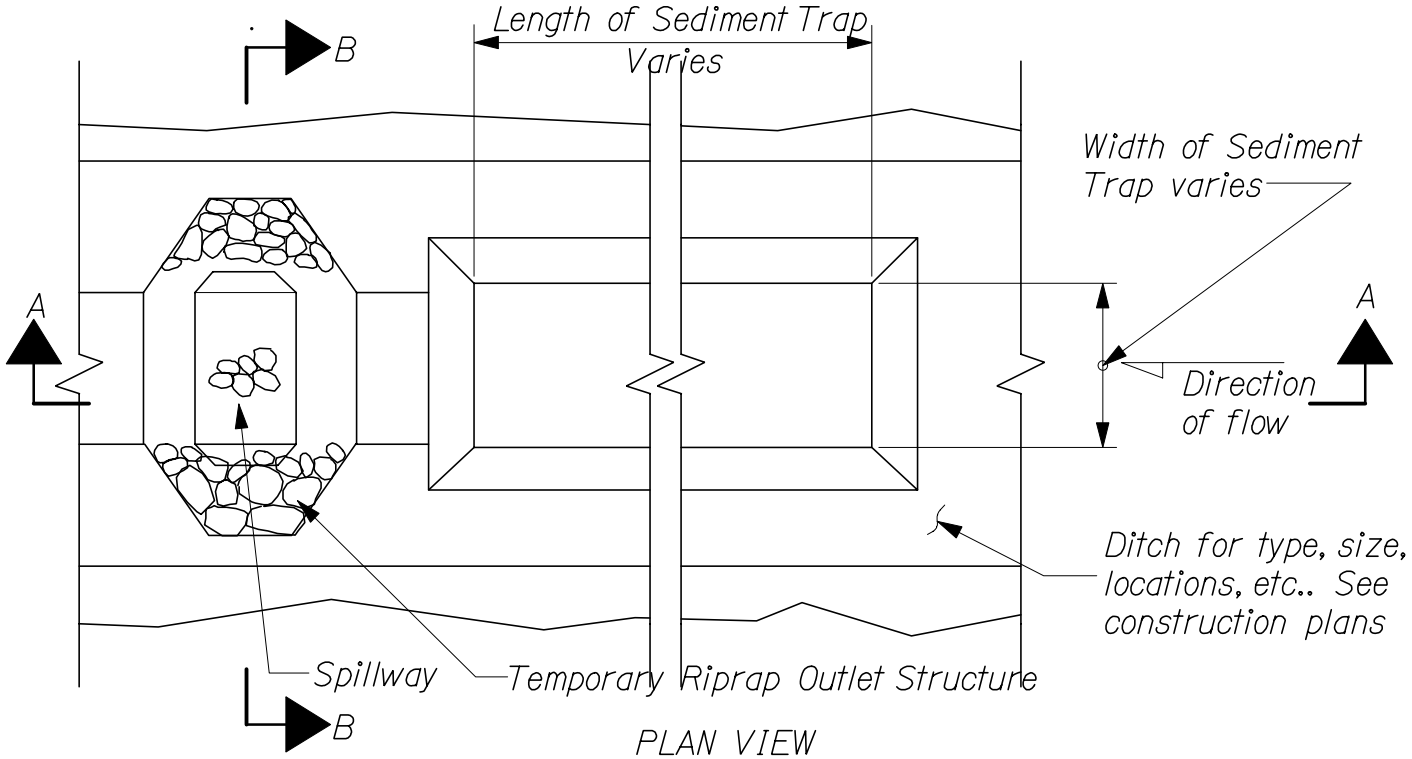

PLAN VIEW

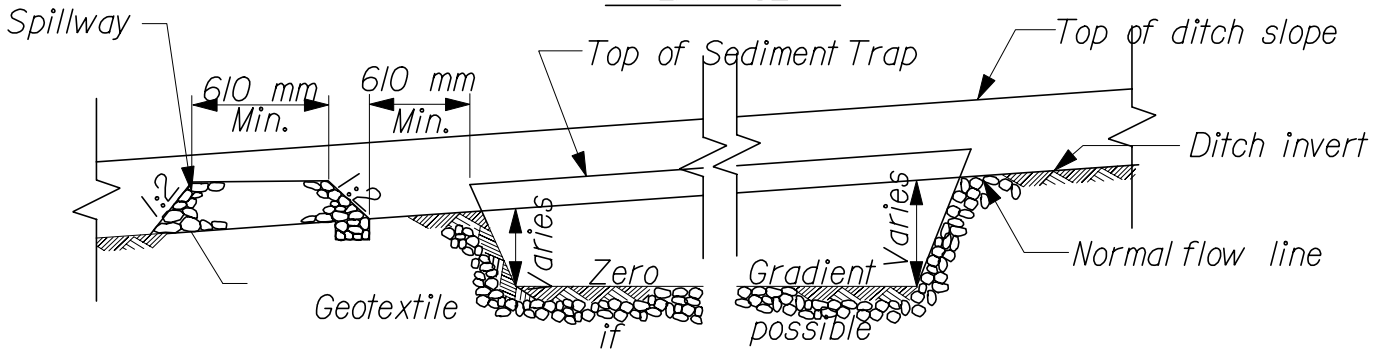

SECTION A-A

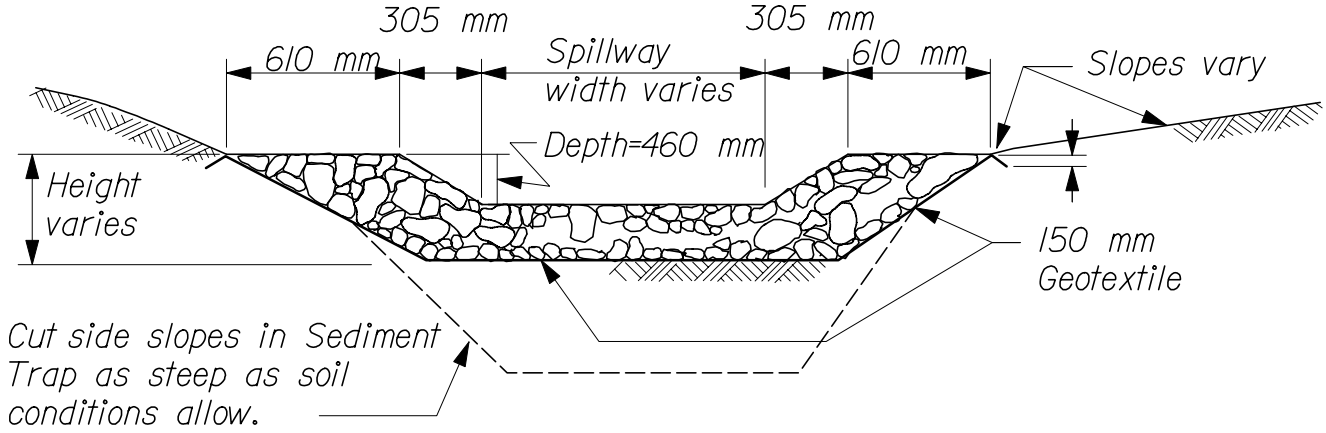

SECTION B-B

REF: Best Management Practice for Erosion and Sediment Control - Sediment Traps

DITCH SEDIMENT TRAP

802(14)

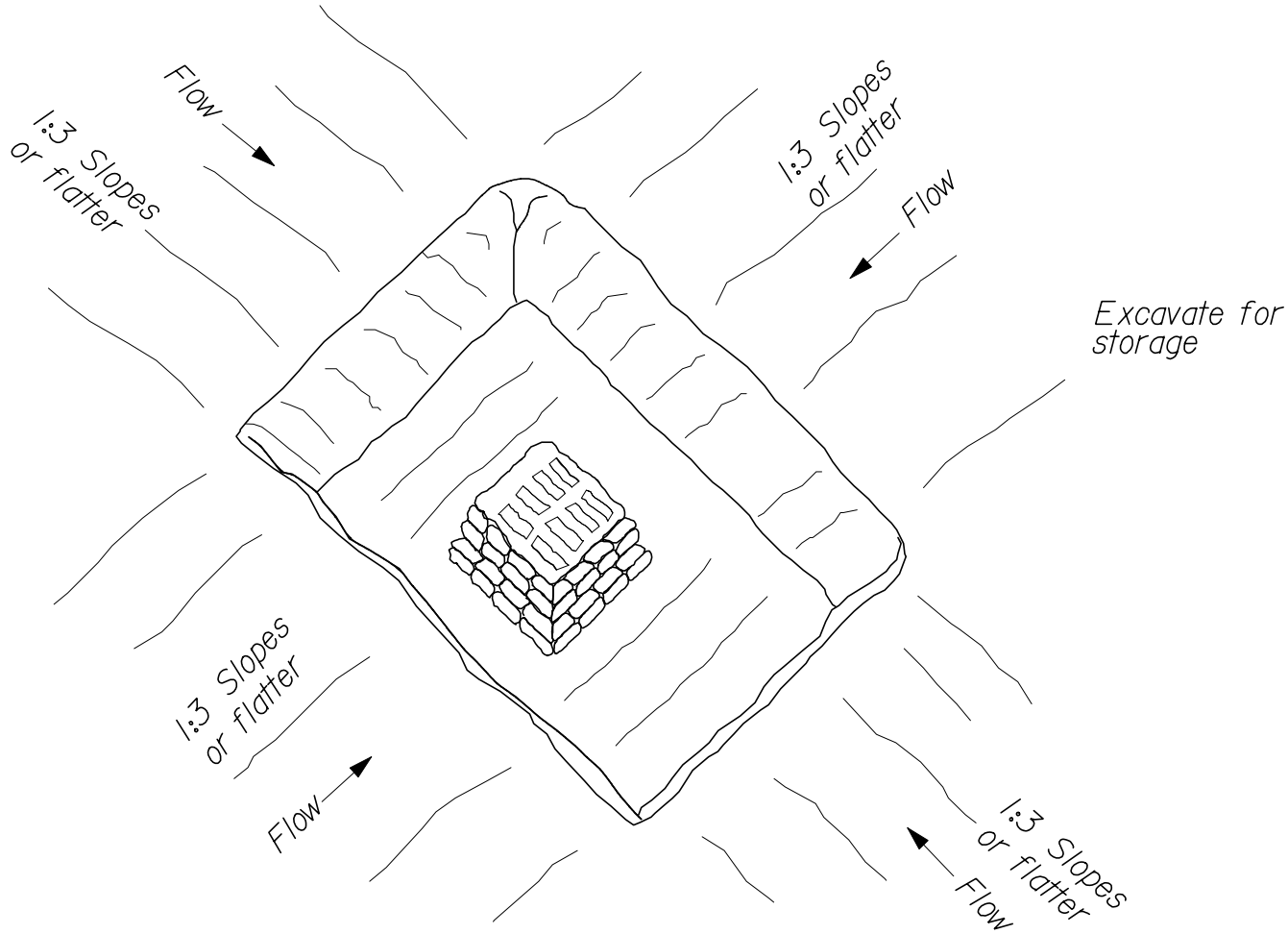

YARD DRAIN

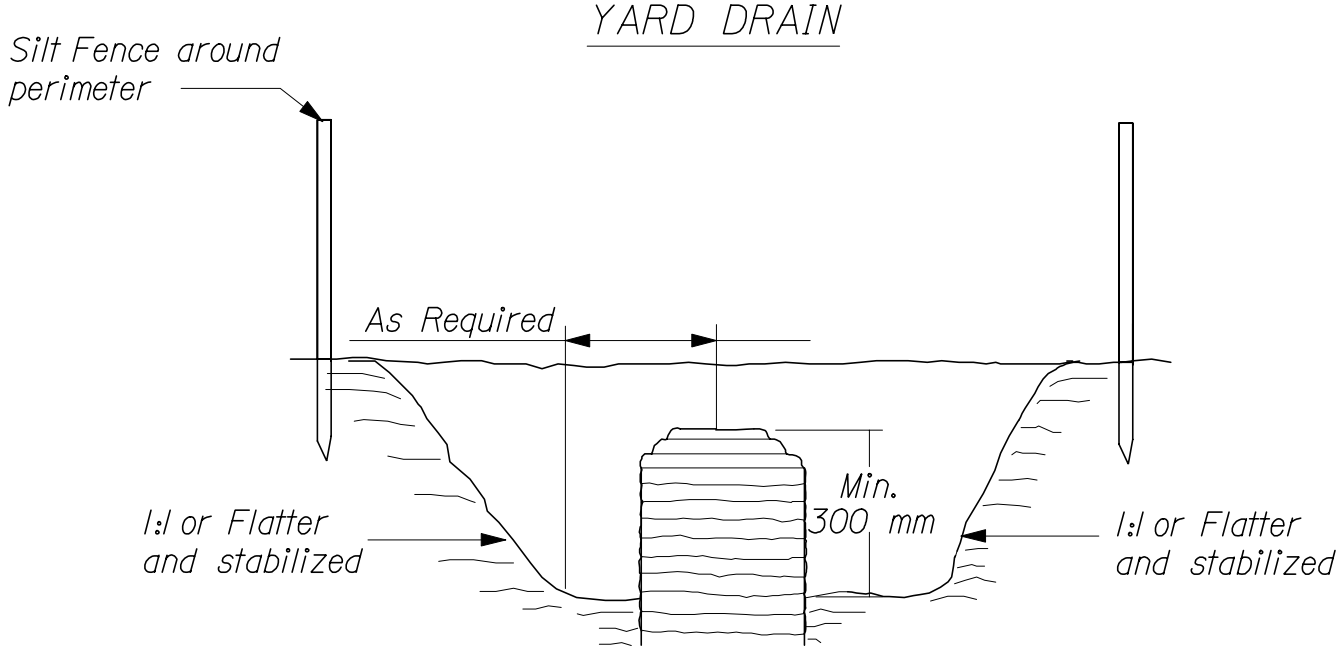

CROSS SECTION

REF: Best Management Practice for Erosion and Sediment Control - Storm Drain Inlet Sediment Trap

STORM INLET SEDIMENT TRAP

802(15)

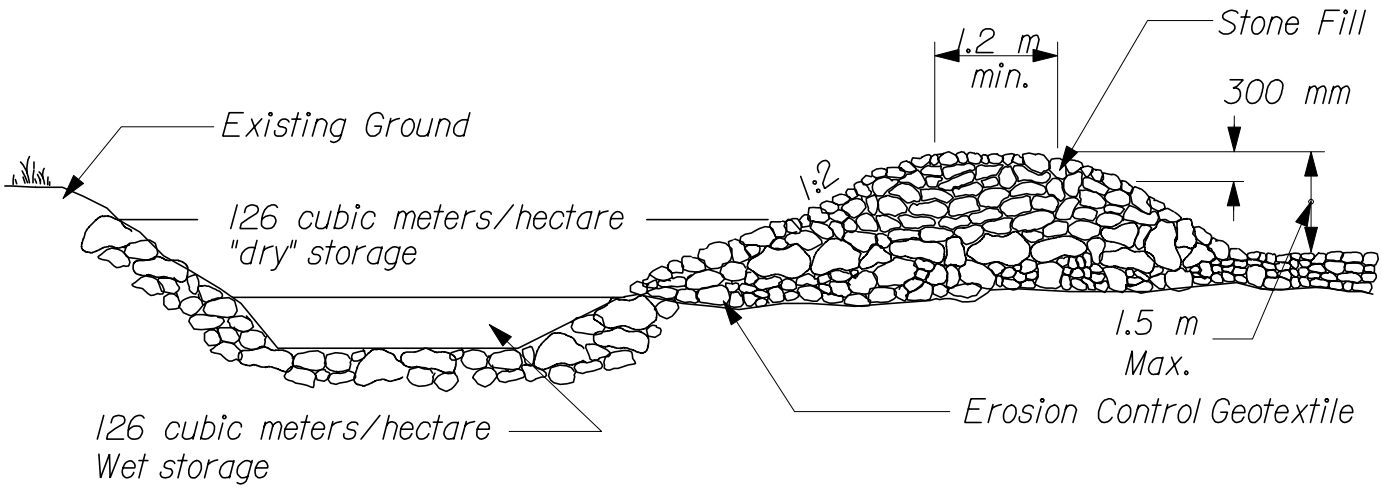

CROSS SECTION

(@ of Outlet)

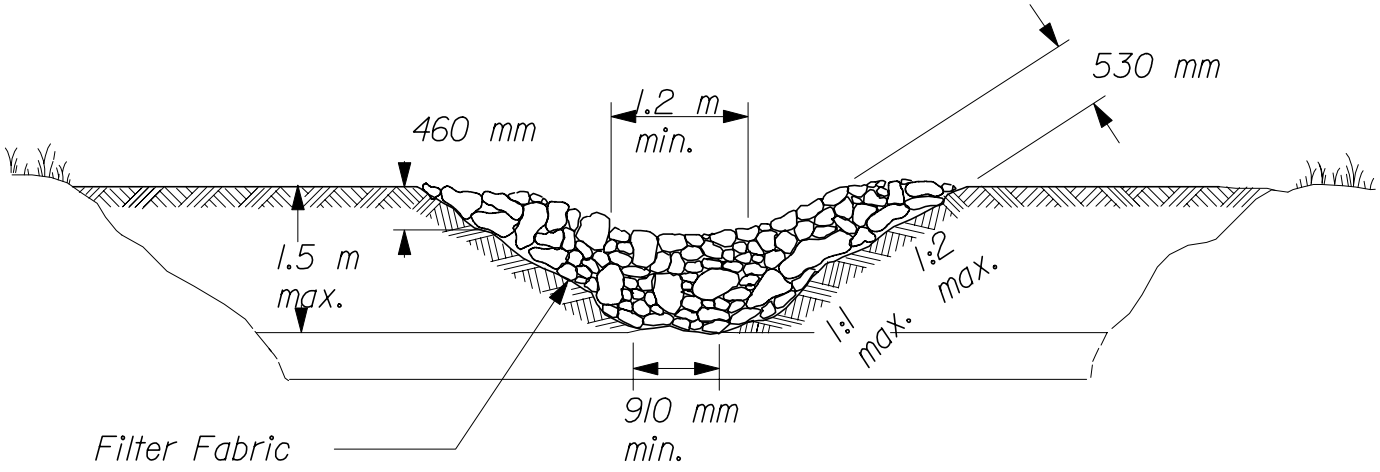

OUTLET

REF: Best Management Practice for Erosion and Sediment Control - Sediment Traps

RIPRAP OUTLET SEDIMENT TRAP

802(16)

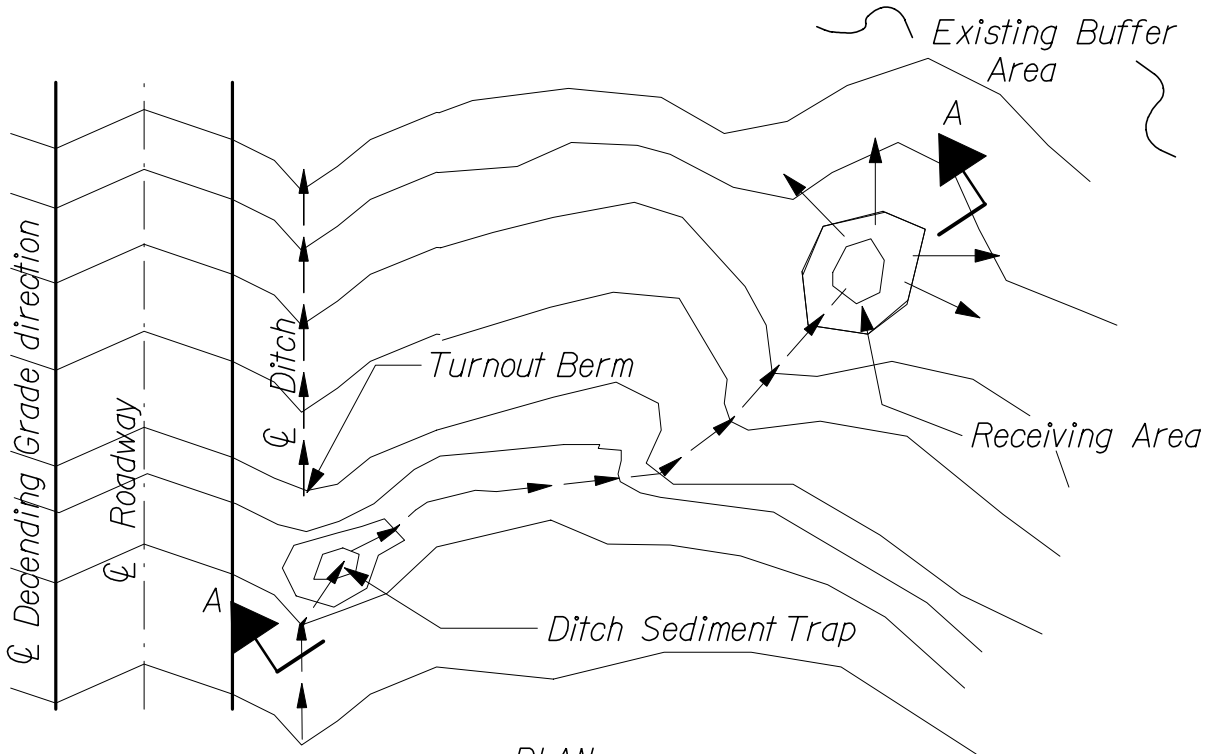

PLAN

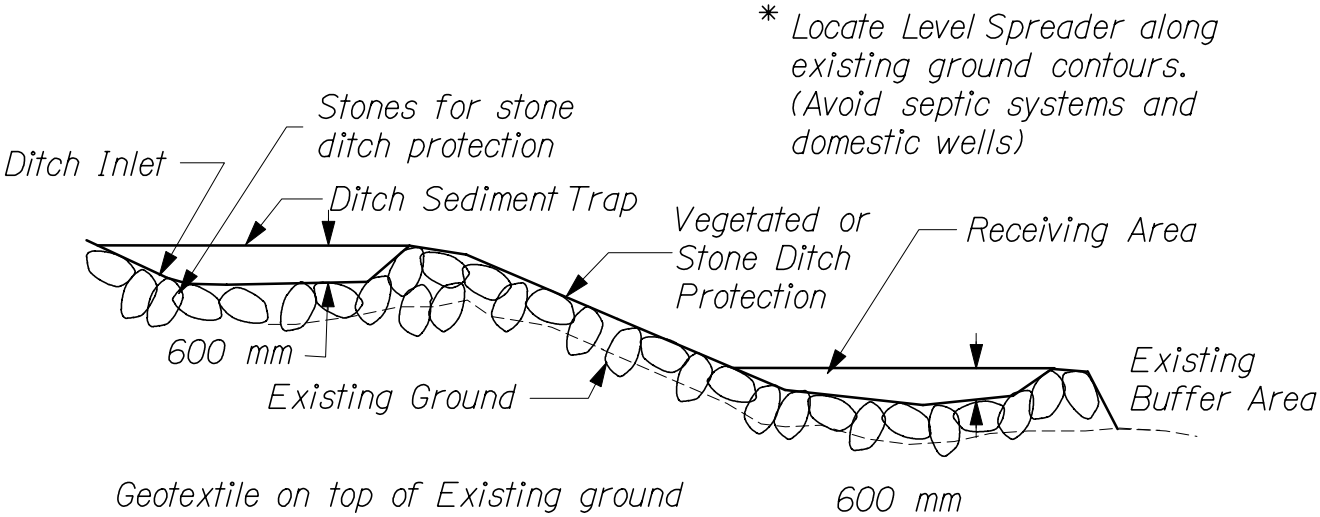

SECTION A-A

REF: Best Management Practice for Erosion and Sediment Control - Road Ditch Turnouts

ROAD DITCH TURNOUT

802(17)

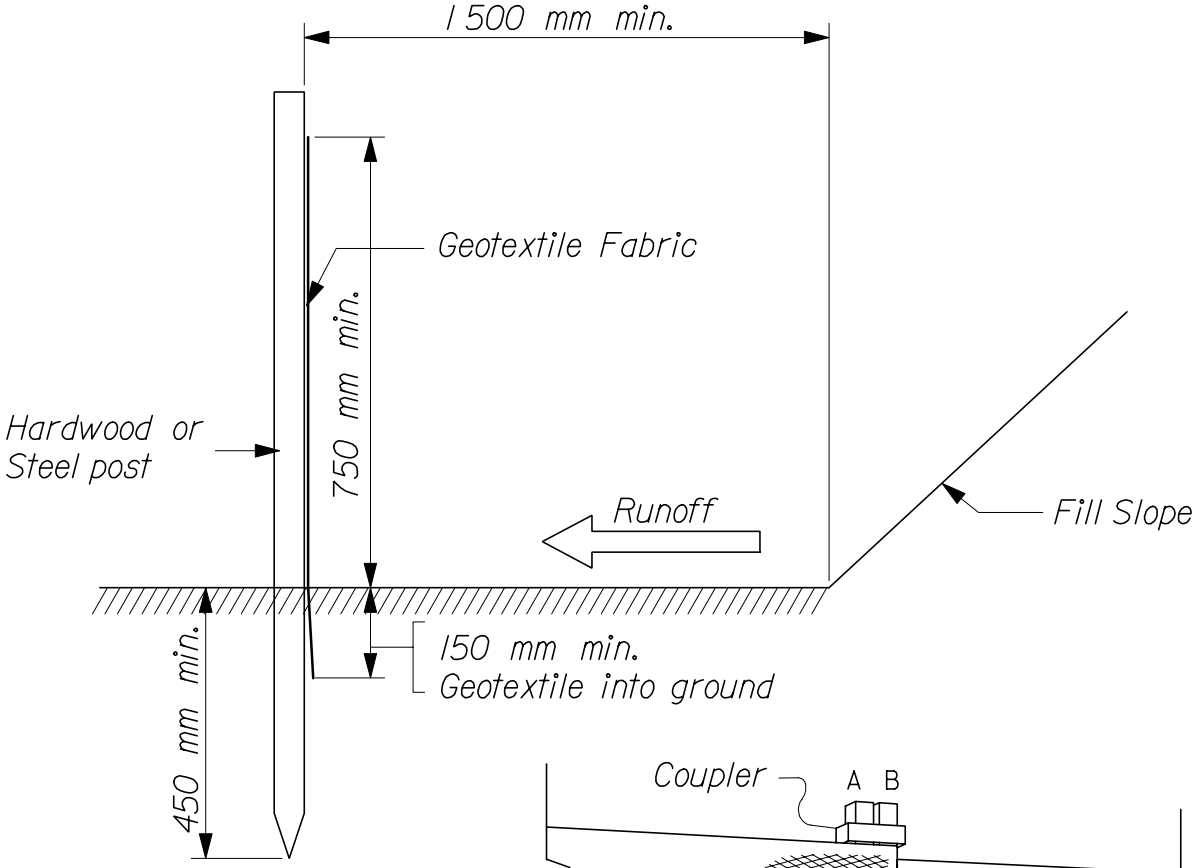

SIDE VIEW

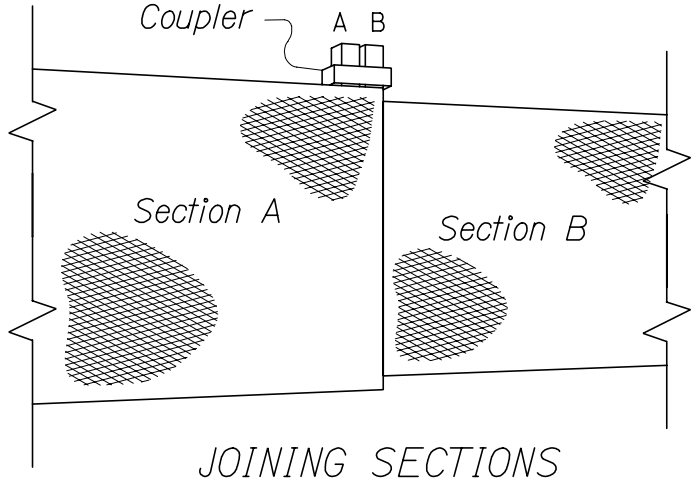

Posts may be wired togther
when joining sections

JOINING SECTIONS

The coupler can be any accepetable
device used to tie the poles together

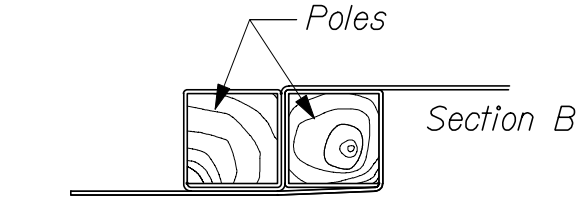

TOP VIEW

REF: Best Management Practice for Erosion and Sediment Control - Level Spreader

SILT FENCE SEDIMENT BARRIER

802(18)

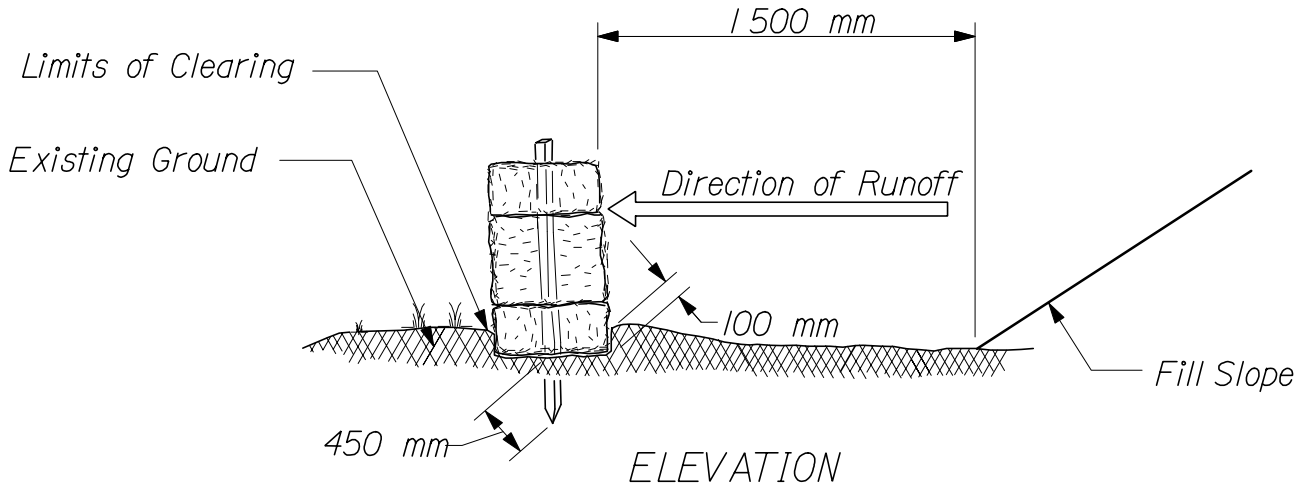

ELEVATION

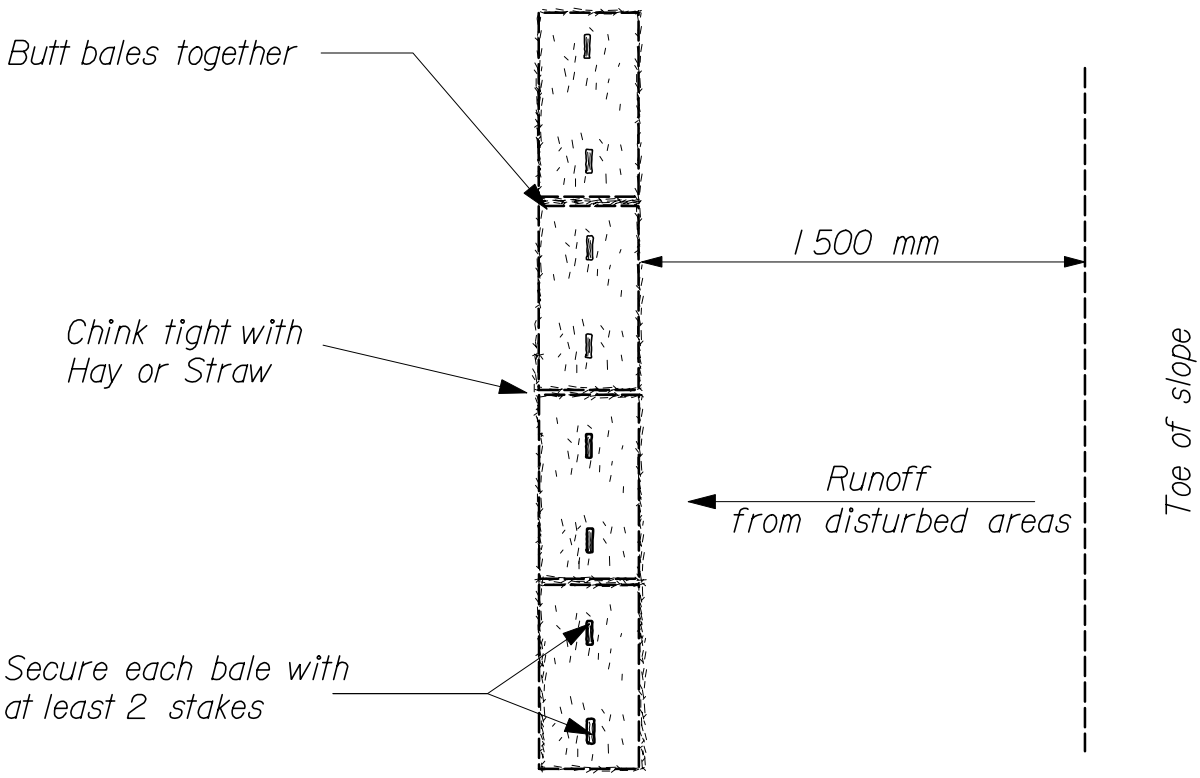

PLAN

NOTE:
Use hay bales in drainage ditches only for low flow condtions and when specified on the Erosion Control Plans. Do not leave in ditches during winter months

REF: Best Management Practice for Erosion and Sediment Control - Sediment Barriers

HAYBALE SEDIMENT BARRIER

802(19)

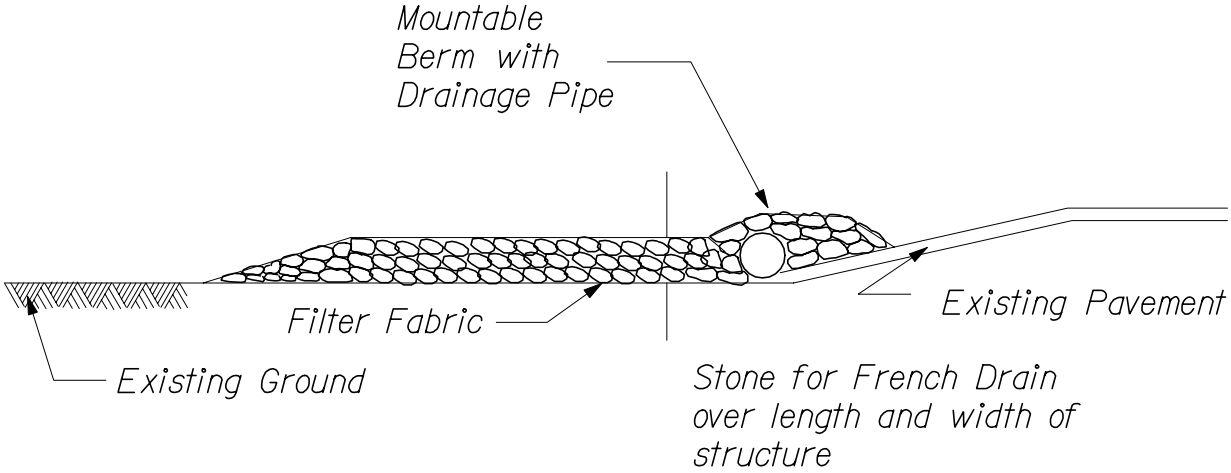

PROFILE

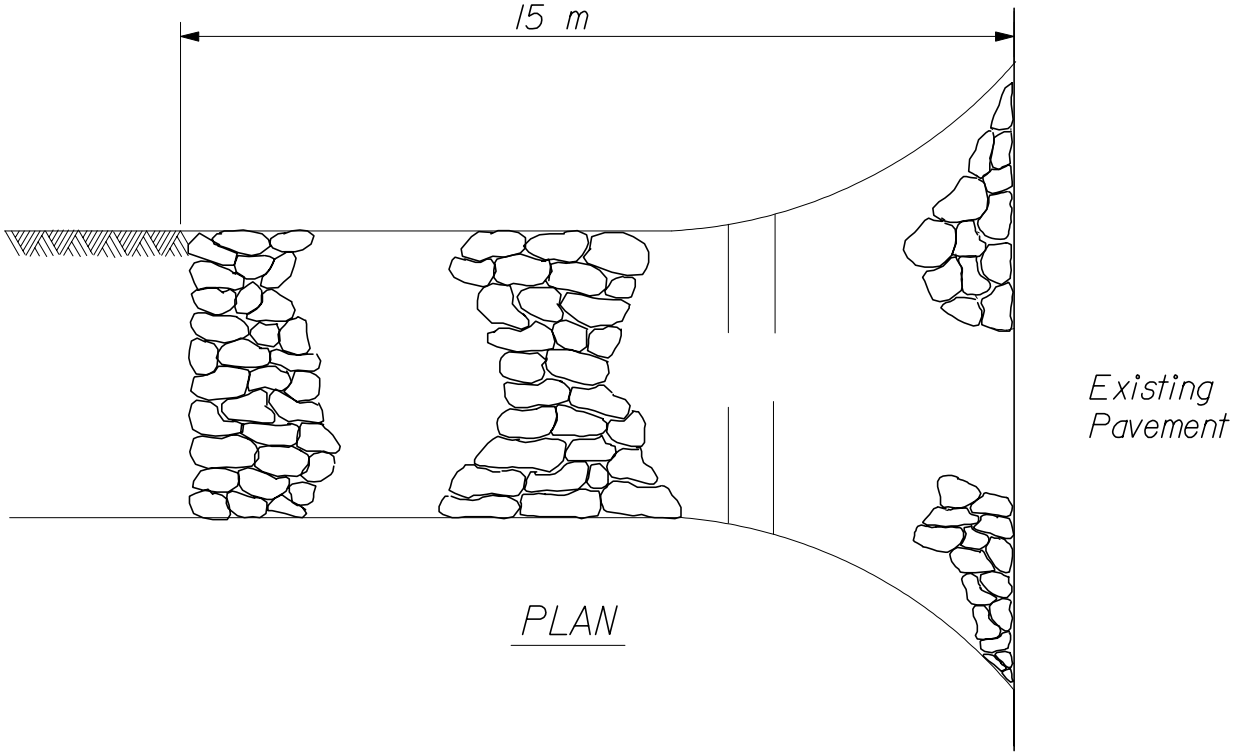

PLAN

REF: Best Management Practice for Erosion and Sediment Control - Stabilized Construction Entrance

STABILIZED CONSTRUCTION ENTRANCE

802(20)

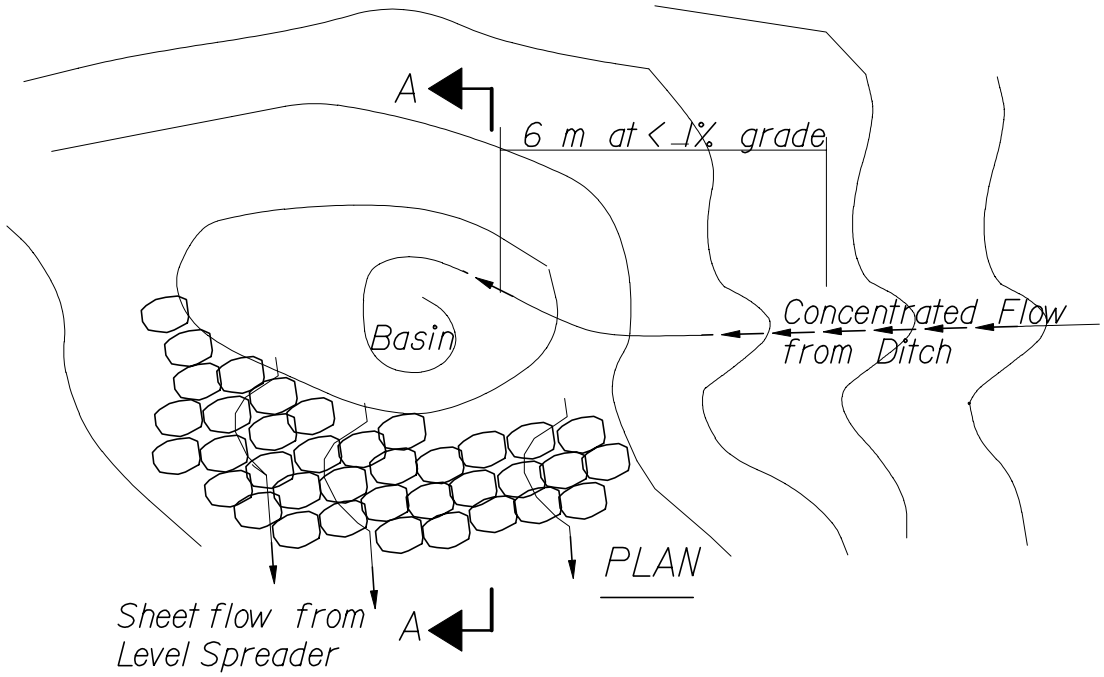

* For staple requirements
see Erosion Control Blanket BMP

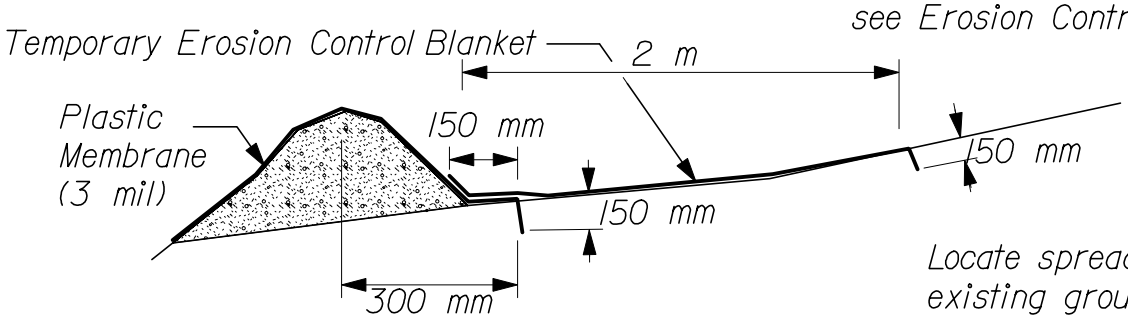

SECTION A-A

Temporary Geotextile Level Spreader

Locate spreaders along existing ground contours

Existing ground should be minimally disturbed to construct level spreaders

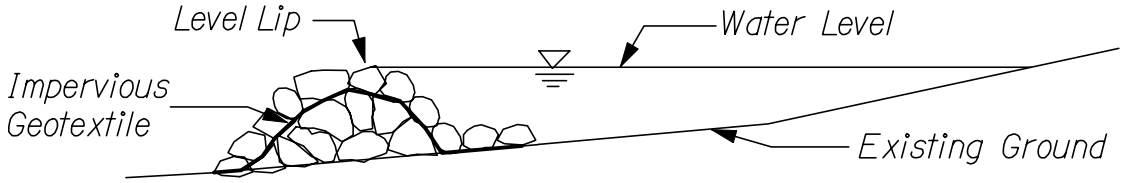

SECTION A-A

Permanent Riprap Level Spreader

NOTE: Level lip of permanent spreader may be a vegetated earthen berm.

REF: Best Management Practice for Erosion and Sediment Control - Level Spreader

LEVEL SPREADER

802(21)

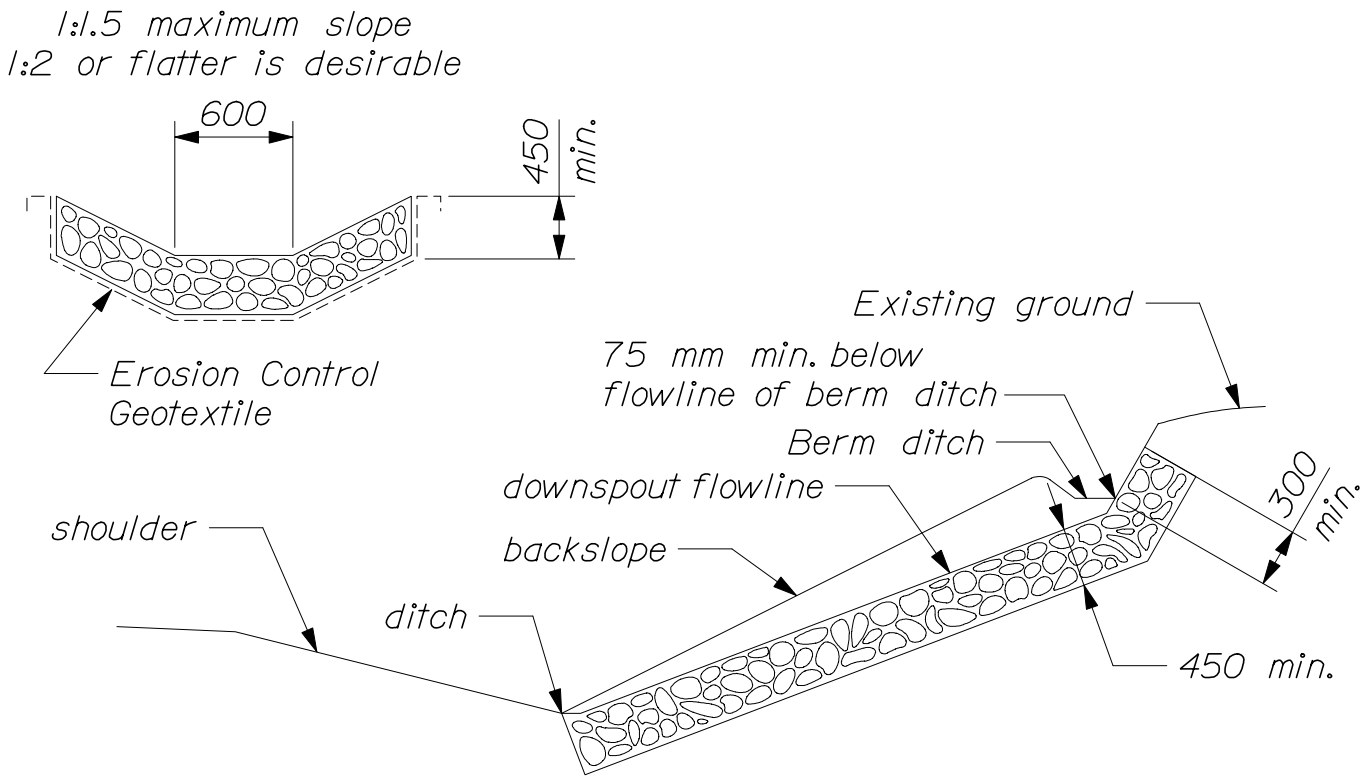

-- RIPRAP DOWNSPOUT --

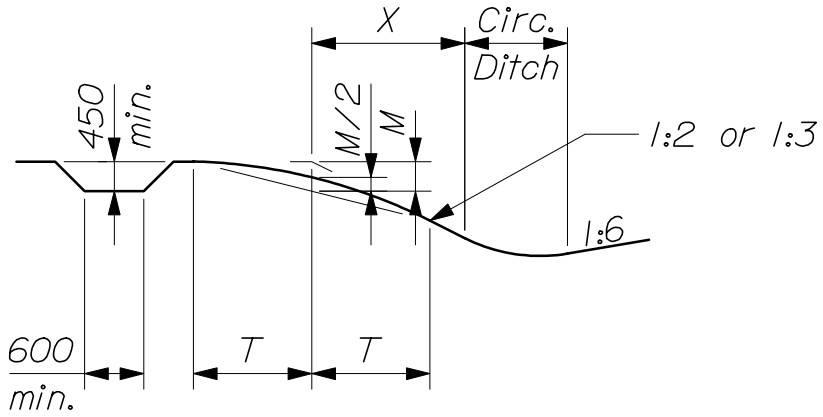

-- BERM DITCH --

1. Construct berm ditch as shown on the plans or as directed by the Resident. Where a 1:2 slope is not pratical use a 1:1.5 slope.

2. Where X = 1 500 mm or less, T = X. Otherwise, T = 1 500 mm. This formula may be modified by the Resident to avoid property damage and to save shade trees.

3. For all sections, the depth of ditch depends on local conditions.

RIPRAP DOWNSPOUTS AND BERM DITCHES

802(22)

Rail Road Crossing General Notes

1. The highway section over railroad crossings shall be designed with a minimum of 2 - 3 300 mm travel ways and 1 800 mm shoulders (1 200 mm shoulders may be authorized if field conditions warrant).

2. Signal shall be located as follows with minimum distances of: 6 430 mm from the edge of the travel way or 1 250 mm from the edge of pavement

3. Crossings shall be paved within 20 calendar days after completion of the crossing rehabilitation.

4. Erosion control shall be provided where directed by the Resident Engineer per section 107.26 of the MDOT Standard Specifications, Revision of October 1995.

5. Construction signs and traffic control devices shall be erected and maintained for the duration of the project per standard detail and Manual of Uniform Traffic Control Devices.

6. Alternative crossing surfaces and procedures may be used with the approval of MDOT.

7. Field work performed between December 15 and March 15 shall be approved in advance by the Resident Engineer.

8. New 115 # prime welded rail shall be provided for crossing reconstruction. The minimum length of welded rail shall be 35.66 m or extend 10 m beyond each shoulder whichever is longer. The full depth excavation area shall extend 3 m beyond the welded rail and excavated to a minimum depth of 700 mm below the proposed rail elevation and sloped to drain.

9. 7" x 9" x 9' ties shall be installed under the welded rail and shall be fully box anchored. Anchors are optional under the crossing surface.

10. Where underdrain is required, the outlet shall be exposed and surrounded by stone. The outlet pipe shall meet Standard Specification 605.10

11. Geotextiles provided for rail crossings shall be the following minimum weights: 8 oz./s. y. for non-woven fabrics and 6 oz./s.y. for woven fabrics. The minimum width through the crossing area shall be 5 m.

RAIL ROAD CROSSING
GENERAL NOTES
803(01)

STANDARD RAILROAD GRADE CROSSING DETAIL

803(02)

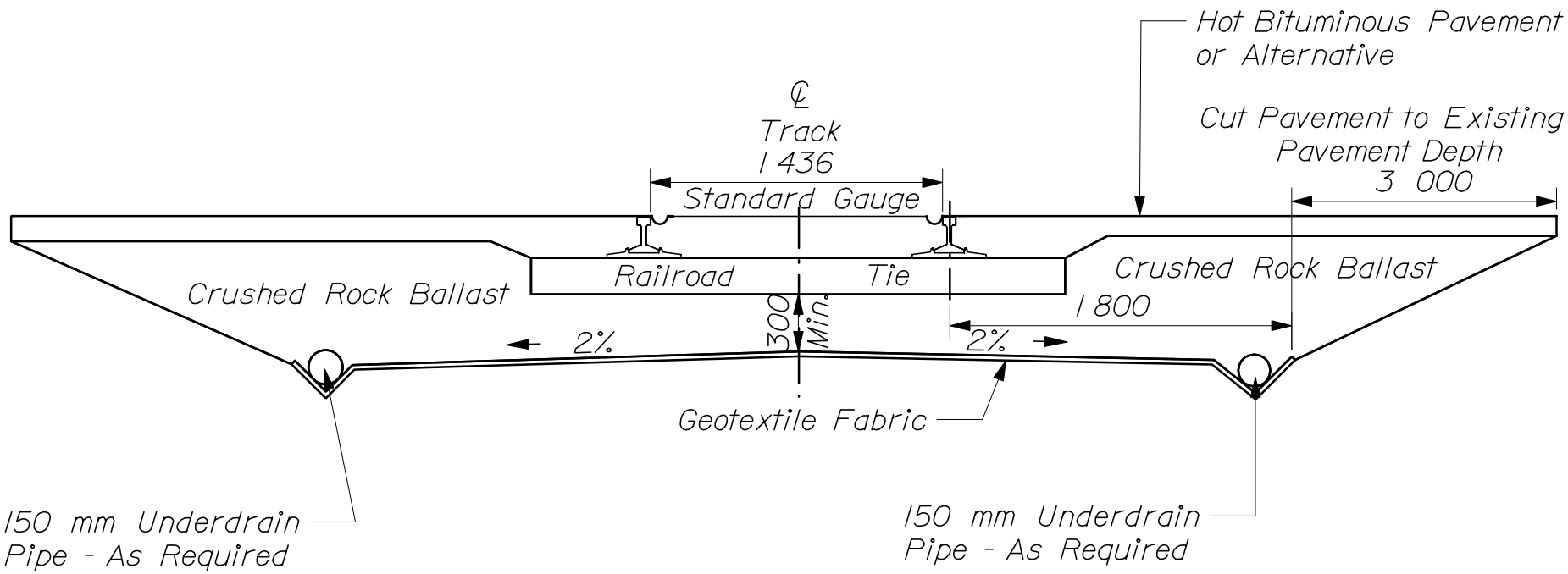

Railroad Section

Not to Scale

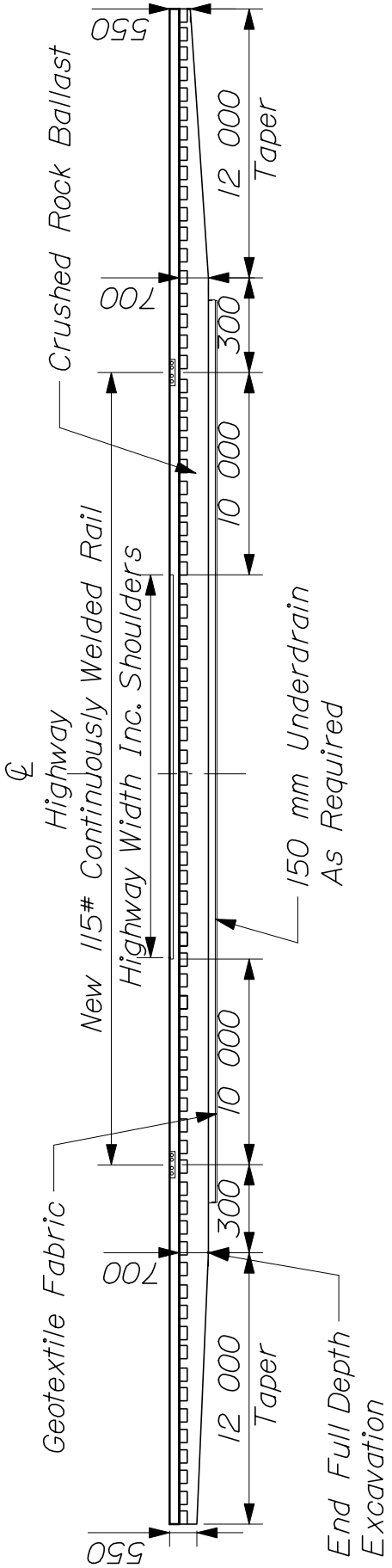

HIGHWAY SECTION
RAILROAD GRADE CROSSING

803(03)

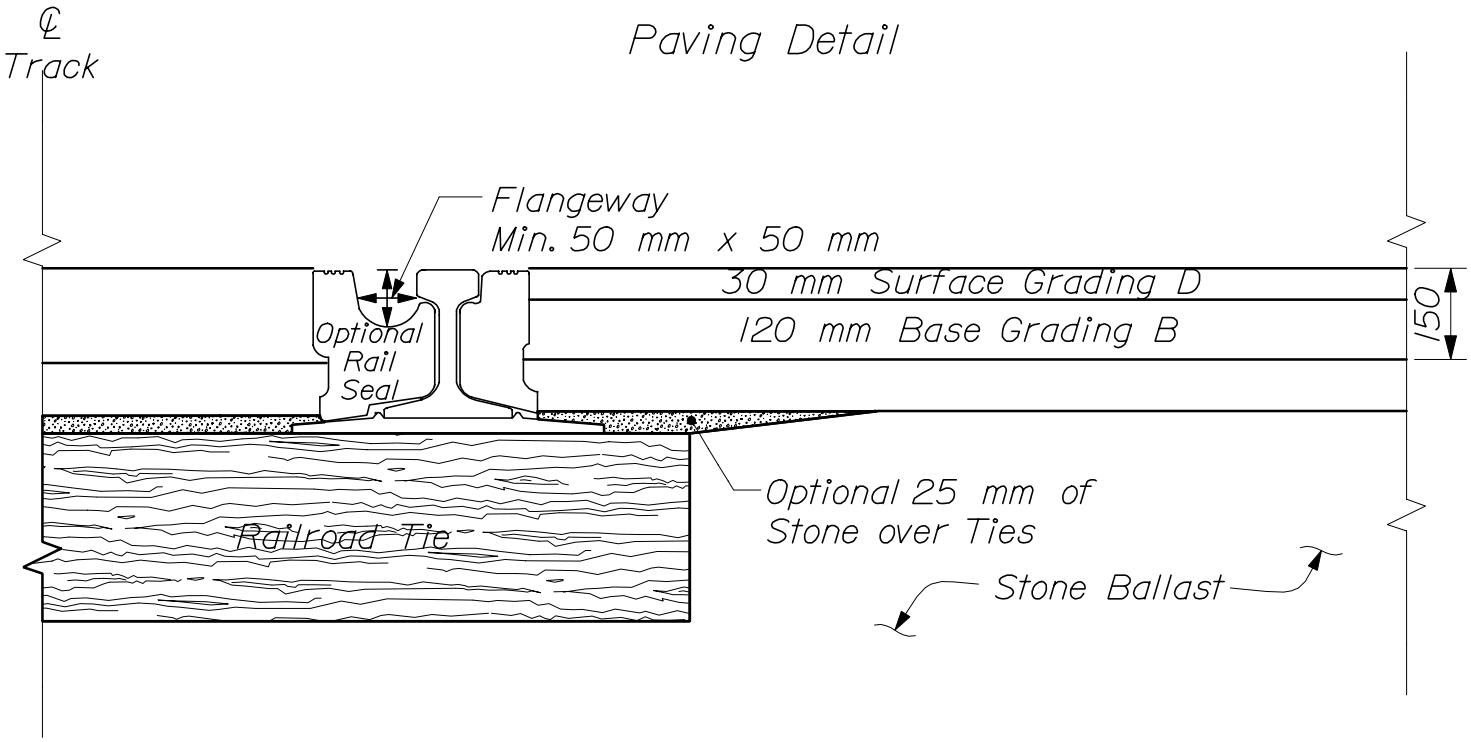

Rail Road Crossing General Notes

All hot bituminous pavement will conform to the following:

Special Provision
Section 403 - Bituminous Pavement

Descrip. of Course	Grad. Design.	Item No.	Bit. Cont. % of Mix	Total Thick.	No. of Layers	Complementary Notes
			Railroad Planning (6" Pavement Depth)			
Wearing	'D'	403.10	5.8 - 7.0	30 mm	1	1, 2
Binder	'B'	403.07	4.8 - 6.0	120 mm	2	1, 2

Complementary Notes

1. The bituminous binder material for the mixture shall be viscosity grade AC -10 or 20 asphalt cement.

2. The density requirements are waived.

# PAVING DETAIL
# PAVING NOTES
803(04)

RAIL ROAD CROSSING GRADING

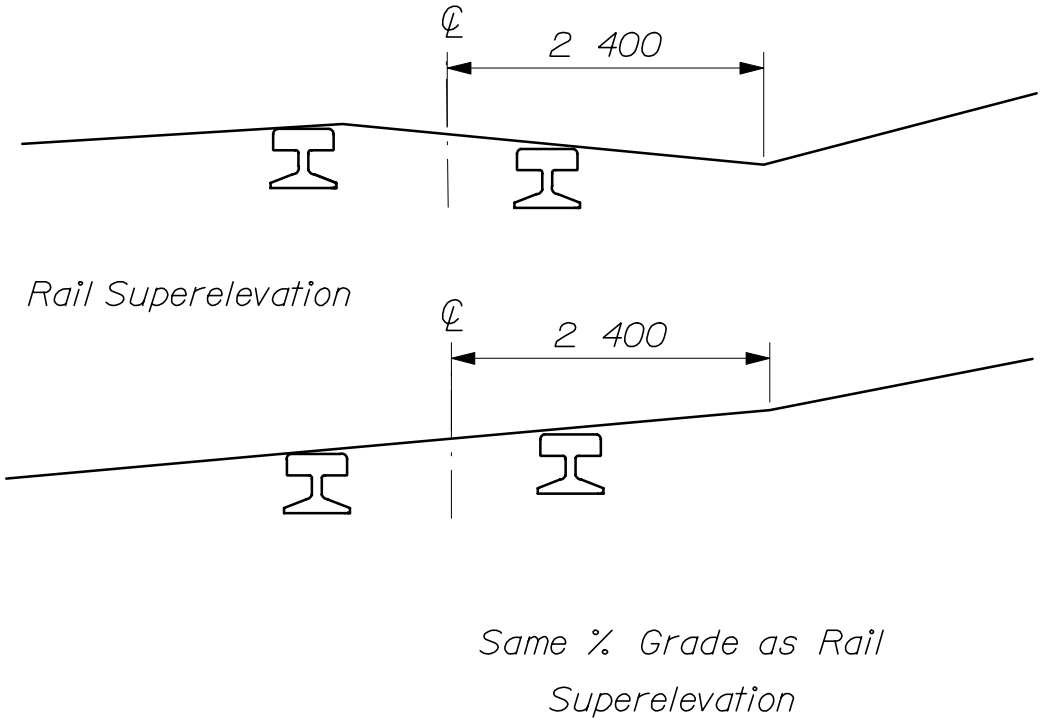

Note:
The slope of the 2 400 mm shown, in no case, shall be above the plane of the rails either side of x per P.U.C. General Order # 2.

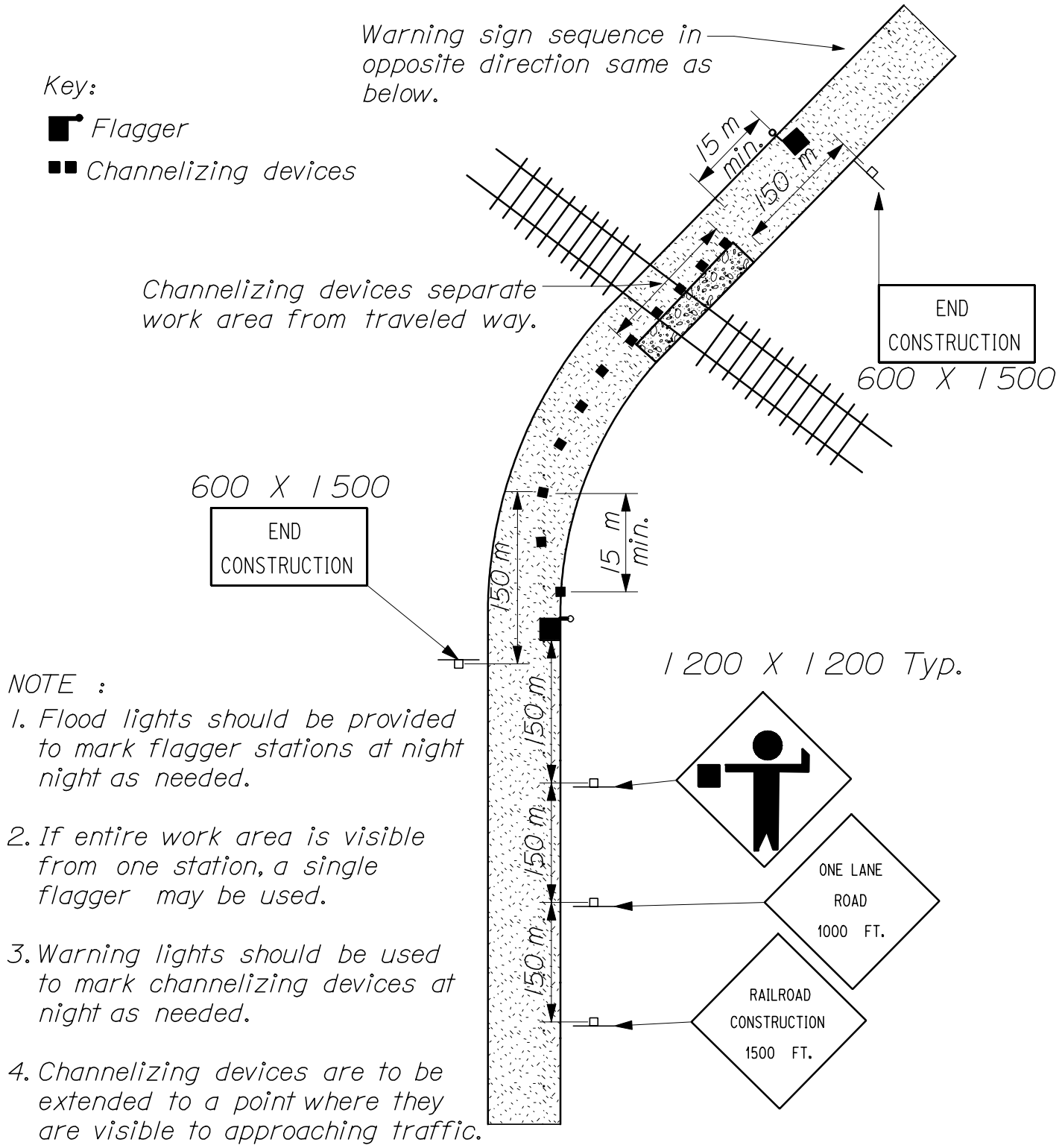

NOTE :

1. Flood lights should be provided to mark flagger stations at night night as needed.
2. If entire work area is visible from one station, a single flagger may be used.
3. Warning lights should be used to mark channelizing devices at night as needed.
4. Channelizing devices are to be extended to a point where they are visible to approaching traffic.

TYPICAL APPLICATIONS OF TRAFFIC CONTROL DEVICES ON 2-LANE HIGHWAY. ONE LANE IS CLOSED AND FLAGGING IS PROVIDED.

803(06)

Suggested Min. Pavement Marking Placement Distance

Use Highest Posted Speed (MPH)	Minimum Distance (Meters)
12.0 km	53.0 m
15.0 km	76.0 m
18.0 km	99.0 m
21.0 km	122.0 m
24.5 km	145.0 m
27.5 km	168.0 m
30.5 km	191.0 m
33.5 km	213.0 m
36.5 km	236.0 m

When used, a portion of the pavement marking symbol should be directly opposite the Advance Warning Sign (W 10-1). If needed, supplemental pavement marking symbol(s) may be placed between the Advance Warning Sign and the crossing, but should be at least 15 m from the Stop Line.

A three lane roadway should be marked with a centerline for two-lane approach operation on the approach to a crossing. On multi-lane roads the transverse bands should extend across all approach lanes, and individual RXR symbols should be used in each approach lane.

Refer to Standard Alphabet for Highway and Markings for RXR symbols details.

PAVEMENT MARKING NOTES

803(07)

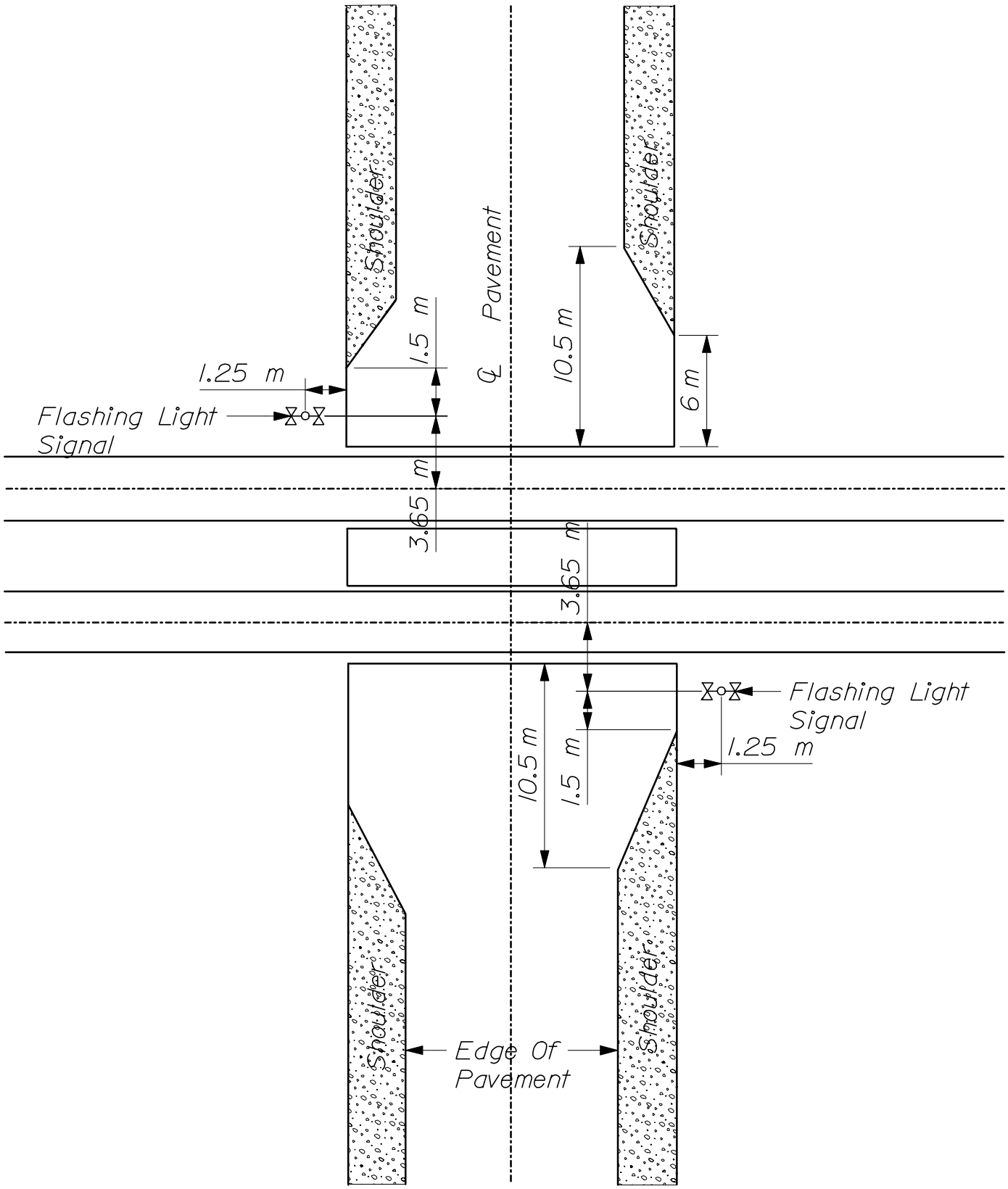

TYPICAL SIGNAL LOCATION AND PAVING PLAN FOR SQUARE CROSSING

803(08)

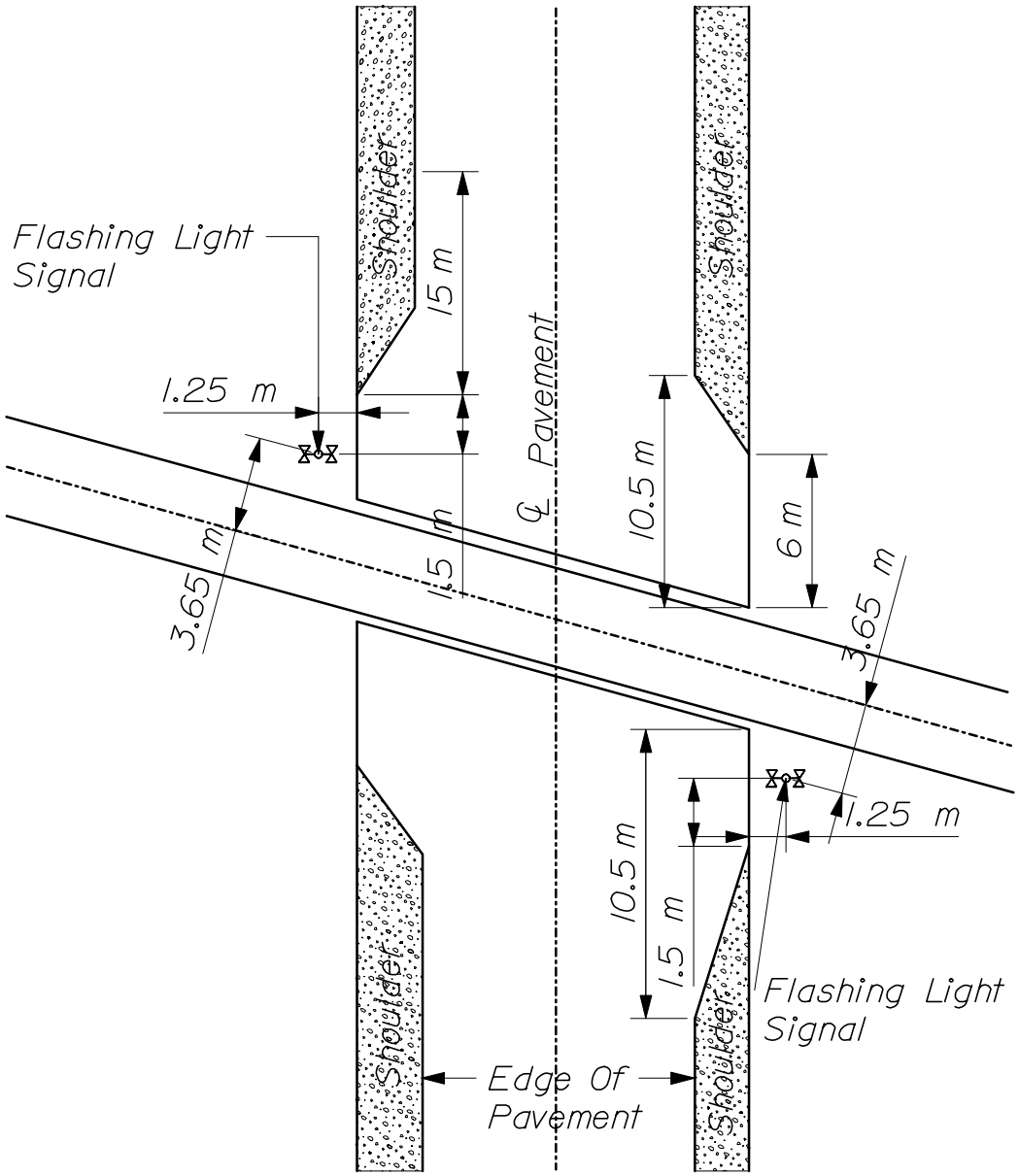

TYPICAL SIGNAL AND GUARD RAIL LOCATIONS FOR ACUTE ANGLE CROSSING

803(09)

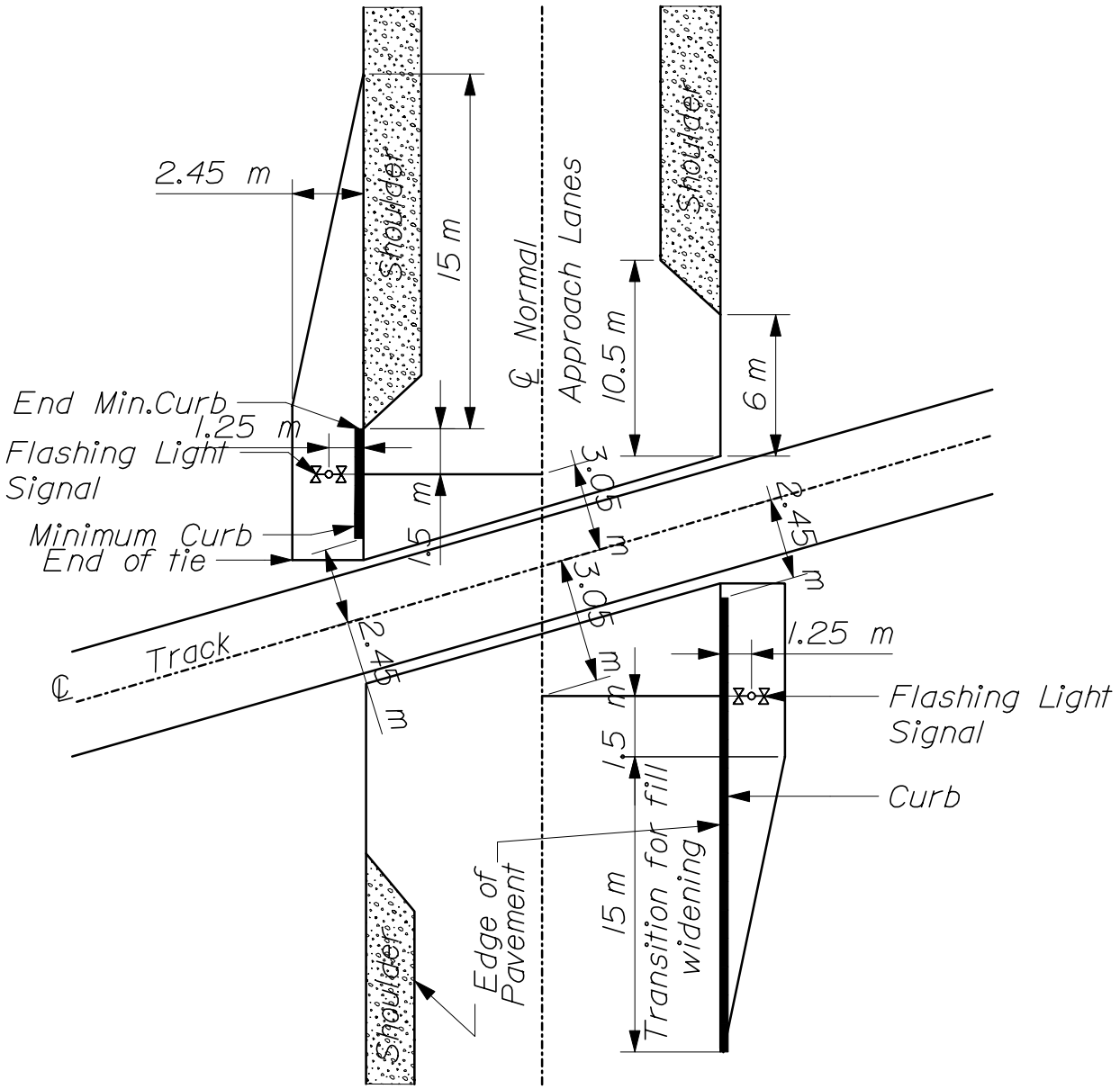

TYPICAL SIGNAL AND CURB LOCATIONS FOR OBTUSE ANGLE CROSSING

803(10)

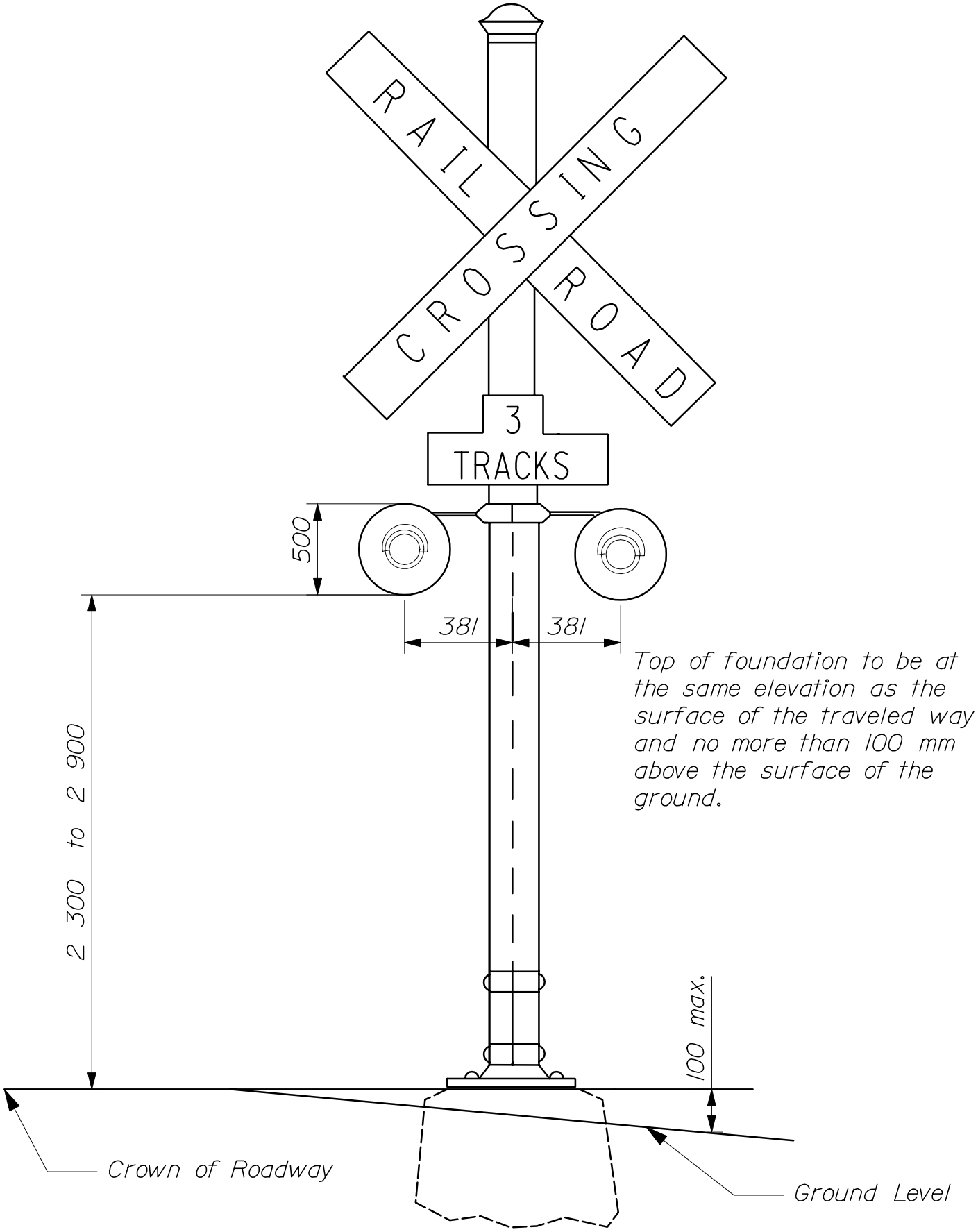

TYPICAL FLASHING LIGHT SIGNAL - POST MOUNTED.
TYPICAL SHOULDER WITHOUT CURB

803(11)

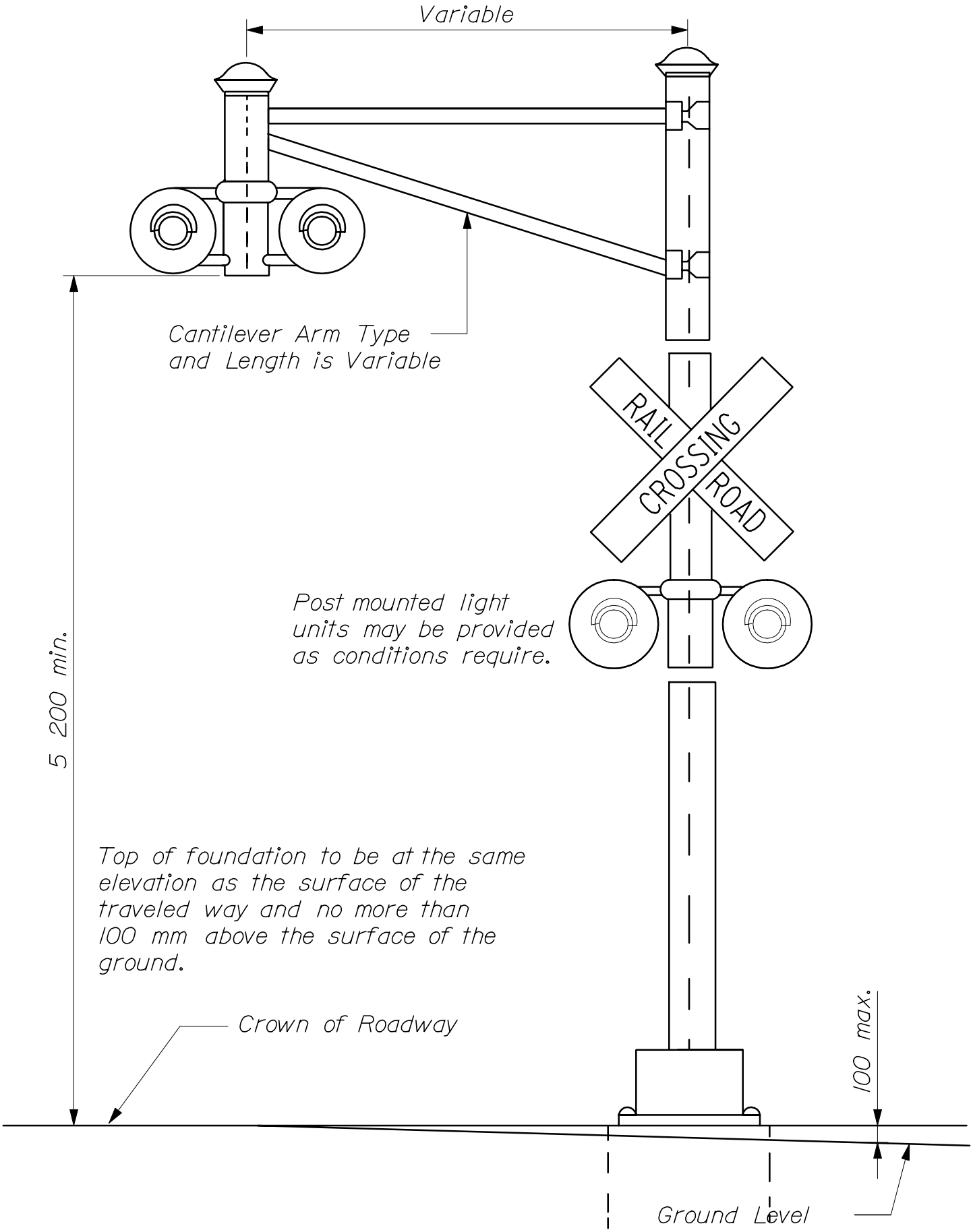

TYPICAL FLASHING LIGHT SIGNAL - CANTILEVER SUPPORTED

803(12)

Typical minimum clearance is 610 mm from face of vertical curb to closest part of signal or gate arm in its upright position for a distance of 5200 mm above the crown of the roadway.

Where there is no curb, a minimum horizontal clearances of 610 mm from edge of a paved or surfaced shoulder shall be provided with a minimum clearance of 1850 mm from the edge of the traveled roadway where there is no curb or shoulder, the minimum horizontal clearance shall be 1850 mm from the edge of the roadway.

Where gates are located in the median, additional widths may be required to provide the minimum clearance for the counterweight supports.

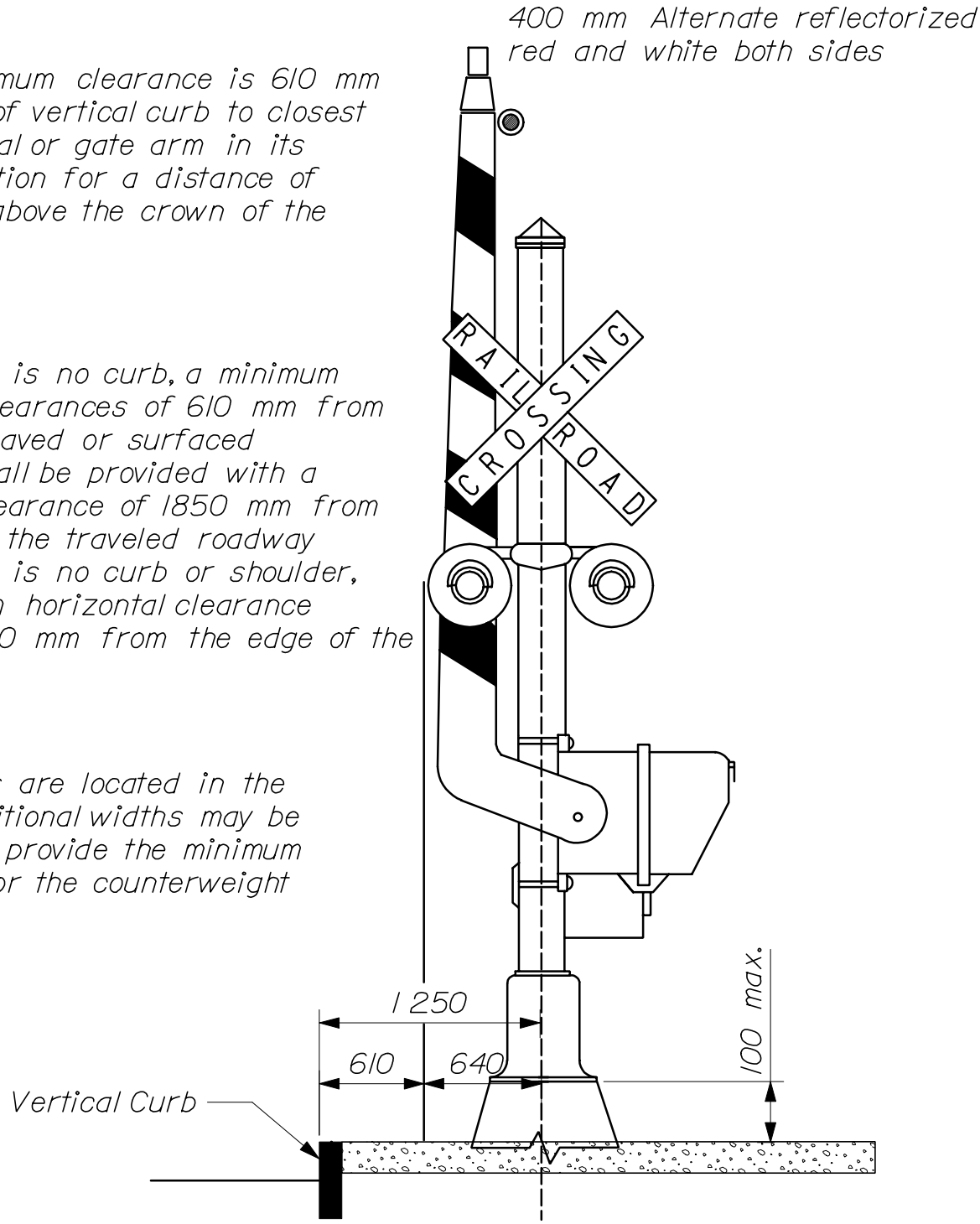

TYPICAL CLEARANCES FOR FLASHING LIGHT SIGNALS AND AUTOMATIC GATES TYPICAL CURB LOCATION

803(13)