011444.00

012091.00

October 15, 2003
Supersedes February 10, 2003

BEFORE SUBMITTING YOUR BID

1. **Use pen and ink to complete the Bid.**

2. **Have you signed and completed the Contract Agreement, Offer & Award Forms?**

3. **As a minimum, the Bidder will submit a Bid Package consisting of the Notice to Contractors, the completed Acknowledgement of Bid Amendments & Submission of Bid Bond Validation Number form, the completed Schedule of Items, 2 copies of the completed Agreement, Offer, & Award form, a Bid Bond or Bid Guarantee, and any other Certifications or Bid Requirements listed in the Bid Book.**

4. **Have you included prices for all Bid Items? ("Zero is not considered a bid price.")**

5. **Have you included a bid guarantee? Acceptable forms are:**

   A. **Bid Bond on the Department's prescribed form for 5% of the Bid Amount. (Or forms that do not contain any significant variations from the Department's forms as solely determined by the Department.)**

   B. **Official Bank Check, Cashier's Check, Certified Check, U.S. Postal Money Order or Negotiable Certificate of Deposit in the amount stated in the Notice to Contractors.**

6. **If the written Bid is to be sent, Federal Express overnight delivery is suggested as the package is delivered directly to the DOT Headquarters Building in Augusta. Other means, such as U.S. Postal Services' Express Mail has proven not to be reliable.**

AND FOR FEDERAL AID PROJECTS

7. **Have you included your DBE Utilization commitment in the proper amounts and signed the DBE Certification?**

If you need further information regarding Bid preparation, call the DOT Contracts Section at (207)624-3430.

For complete specifications regarding bidding requirements, refer to Section 102 of the Maine Department of Transportation, Standard Specifications, Revision December 2002.

February 11, 2003

NOTICE

The Maine Department of Transportation is attempting to improve the way Bid Amendments/Addendums are handled, and allow for an electronic downloading of bid packages from our website, while continuing to maintain a planholders list.

Prospective bidders, subcontractors or suppliers who wish to download a copy of the bid package and receive a courtesy notification of project specific bid amendments, must provide an email address to Diane Barnes at the MDOT Contracts mailbox at: MDOT.contracts@maine.gov. Each bid package will require a separate request. Please provide us an email address, so we can maintain the planholders list that both the industry and MDOT uses.

Additionally, the new Acknowledgement of Bid Amendment form will be placed in MDOT bid packages beginning with the 2/12/03 advertisements. After that date, interested parties will be responsible for reviewing and retrieving the Bid Amendments from our web site, and acknowledging receipt and incorporating those Bid Amendments in their bids.

The downloading of bid packages from the MDOT website is not the same as providing an electronic bid to the Department. Electronic bids must be submitted via **http://www.BIDX.com**. For information on electronic bidding contract Rebecca Pooler at **rebecca.pooler@maine.gov**.

STATE OF MAINE DEPARTMENT OF TRANSPORTATION

Bid Guaranty-Bid Bond Form

KNOW ALL MEN BY THESE PRESENTS THAT_____

_____, of the City/Town of _____and State of_____

as Principal, and _____as Surety, a

Corporation duly organized under the laws of the State of_____and having a usual place of

Business in _____and hereby held and firmly bound unto the Treasurer of

the State of Maine in the sum of_____,for payment which Principal and Surety bind

themselves, their heirs, executers, administrators, successors and assigns, jointly and severally.

The condition of this obligation is that the Principal has submitted to the Maine Department of Transportation, hereafter Department, a certain bid, attached hereto and incorporated as a part herein, to enter into a written contract for the construction of _____

_____

_____and if the Department shall accept said bid and the Principal shall execute and deliver a contract in the form attached hereto (properly completed in accordance with said bid) and shall furnish bonds for this faithful performance of said contract, and for the payment of all persons performing labor or furnishing material in connection therewith, and shall in all other respects perform the agreement created by the acceptance of said bid, then this obligation shall be null and void; otherwise it shall remain in full force, and effect.

Signed and sealed this_____day of _____20_____

WITNESS:

_____

_____

_____

WITNESS

_____

_____

_____

PRINCIPAL:

By_____

By:_____

By:_____

SURETY:

By_____

By:_____

Name of Local Agency: _____

SAMPLE

NOTICE

For security and other reasons, all Bid Packages which are mailed, shall be provided in double (one envelope inside the other) envelopes. The *Inner Envelope* shall have the following information provided on it:

Bid Enclosed - Do Not Open
PIN:
Town:
Date of Bid Opening:
Name of Contractor with mailing address and telephone number:

In Addition to the usual address information, the *Outer Envelope* should have written or typed on it:

Double Envelope: Bid Enclosed
PIN:
Town:
Date of Bid Opening:
Name of Contractor:
This should not be much of a change for those of you who use Federal Express or similar services.

Hand-carried Bids may be in one envelope as before, and should be marked with the following infrormation:

Bid Enclosed: Do Not Open
PIN:
Town:
Name of Contractor:

INSTRUCTIONS FOR PREPARING THE CONTRACTOR'S DISADVANTAGED BUSINESS ENTERPRISE UTILIZATION PLAN

The Contractor Shall:

1. Submit a completed Contractor's Disadvantaged Business Enterprise Utilization Plan to the Contract's Engineer by 4:30 P.M. on the Bid day.

2. Extend equal opportunity to MDOT certified DBE firms (as listed in MDOT's DBE Directory of Certified Businesses) in the selection and utilization of Subcontractors and Suppliers.

SPECIFIC INSTRUCTIONS FOR COMPLETING THE FORM:

Insert Contractor name, the name of the person(s) preparing the form, and that person(s) telephone and fax number.

Provide total Bid price, Federal Project Identification Number, and location of the Project work.

In the columns, name each DBE firm to be used, provide the Unit or Item cost of the Work/Product to be provided by the DBE firm, give a brief description of the Work, and the dollar value of the Work.

If no DBE firm is to be utilized, the Contractor must document the reason(s) why no DBE firms are being used. Specific supporting evidence of good faith efforts taken by Contractors to solicit DBE Bidders must be attached. This evidence, as a minimum, includes phone logs, e-mail and/or mail DBE solicitation records, and the documented results of these solicitations.

NOTICE

The Department has revised the Disadvantaged Business Enterprise Proposed Utilization form and the procedure that has been used for the past several months for Contractors to submit the form.

The Apparent Low Bidder now must submit the form by close of Business (4:30 P.M.) on Bid day.

The new Contractor's Disadvantaged Business Enterprise Proposed Utilization Plan form contains additional information that is required by USDOT.

The Disadvantaged Business Enterprise Proposed Utilization Plan form will no longer be used. The new Contractor's Disadvantaged Business Enterprise Proposed Utilization Plan form must be used.

A copy of the new Contractor's Disadvantaged Business Enterprise Proposed Utilization Plan and instructions for completing it are attached.

Note: Questions about DBE firms, or to obtain a printed copy of the DBE Directory, contact Equal Opportunity at (207) 624-3066.

MDOTs DBE Directory of Certified firms can also be obtained at http://www.state.me.us/mdot/humnres/o_equalo/cdwbed_h.htm

NOTICE

Bidders:

Please use the attached “Request for Information” form when faxing questions and comments concerning specific Contracts that have been Advertised for Bid. Include additional numbered pages as required.

State of Maine
Department of Transportation

REQUEST FOR INFORMATION

Date _____ Time _____

Information Requested: **PIN:** _____ **Town(s):** _____

_____

_____

_____

_____

_____

_____

_____

_____

_____

_____

_____

_____

Request by: _____ **Phone: (_____)**_____
Bid Date: _____ **Fax: (_____)**_____

Complete top portion of form and transmit to the number listed in the Notice to Contractors

RFI No: _____ **RFI received:** _____

Response:_____

_____

_____

_____

_____

_____

_____

_____

_____

_____

_____

Response By:_____ Date: _____

CONTRACTOR'S DISADVANTAGED BUSINESS ENTERPRISE PROPOSED UTILIZATION PLAN

Low Bidder shall furnish completed form to Contracts Section by 4:30 P.M. on Bid Opening day.

TO: MDOT Contracts Section
16 State House Station,
Augusta, Me 04333-0016
or
Fax: 207-624-3431

Contractor: _____
Prepared by: _____

Telephone: _____ Fax: _____

BID PRICE: $_____FEDERAL PROJECT #_____LOCATION: _____

TOTAL DBE PARTICIPATION AS A PERCENT OF TOTAL BID PRICE = _____%

DBE Firm*	Unit/Item Cost	Unit #	Description of work & Item Number	Actual $ Value
			Total >	

If no DBE firm(s) are used, bidder must document efforts made to secure DBE participation and attach supporting evidence of this effort:
_____
_____.

Examples: Bidder relies wholly upon low quote subcontractor section, DBE firm(s) were not low quote. No DBE firms bid.

***Only DBE firms certified by MDOT prior to bidding can be utilized by Contractor for DBE credit. Directory of certified DBEs is available on MDOT's website: www.state.me.us/mdot**

Equal Opportunity Use:

Plan received ___/___/___ Verified by: _____ Action: _____

Office of Human Resources

Equal Opportunity

MAINE DEPARTMENT OF TRANSPORTATION

Certified Disadvantaged and Women Business Enterprise

DBE DIRECTORY - MINORITY OWNED

WBE DIRECTORY - WOMEN OWNED

WEBSITE FOR DIRECTORY CAN BE FOUND AT:
http://www.state.me.us/mdot/humnres/o_equalo/cdwbed_h.htm

It is the responsibility of the Contractor to access the DBE Directory at this site in order to have the most current listings.

STATE OF MAINE DEPARTMENT OF TRANSPORTATION
NOTICE TO CONTRACTORS

Sealed Bids addressed to the Maine Department of Transportation, Augusta, Maine 04333 and endorsed on the wrapper "Bid for a Hot Mix Asphalt Overlay, Drainage Improvements, Shoulder Reclaim and Guardrail Improvements in the towns of **Bethel, Woodstock and Oxford**" will be received from contractors at the Reception Desk, Maine DOT Building, Child Street, Augusta, Maine, until 11:00 o'clock A.M. (prevailing time) on February 11, 2004 and at that time and place publicly opened and read. Bids will be accepted from contractors prequalified by the Department of Transportation for highway construction or paving projects. All other Bids may be rejected. **MDOT provides the option of electronic bidding. We accept electronic bids for those bid packages posted on the bidx.com website. Electronic bids do not have to be accompanied by paper bids. Please note: the Department will accept a facsimile of the bid bond; however, the original bid bond must then be received at the MDOT Contract Section within 72 hours of the bid opening. Until further notice, dual bids (one paper, one electronic) will be accepted, with the paper copy taking precedence.**

Description: Maine Federal Aid Project No. NH-1144(400)E, PIN 011444.00; STP-1209(100)X, PIN 012091.00

Location: In Oxford County, project NH-1144(400)E is located on Route 26 in Woodstock, beginning 1.91 miles northerly of the West Paris town line and extending northerly 2.68 miles. Project STP-1209(100)X, Guardrail Improvements, is located on Route 26 in the towns of Bethel, Woodstock and Oxford, beginning 4.23 Miles north of the Greenwood/Bethel Town Line and extending southerly to a point 2.52 miles south of the Oxford/ Norway Town Line.

Outline of Work: Hot Mix Asphalt Overlay, Drainage Improvements, Shoulder Reclaim, Guardrail Improvements and other incidental work.

For general information regarding Bidding and Contracting procedures, contact Bruce Carter at (207)624-3430. Our webpage at http://www.state.me.us/mdot/project/design/homepg.htm contains a copy of the schedule of items, Plan Holders List, written portions of bid amendments (not drawings), and bid results. For Project-specific information fax all questions to **Jamie Andrews** at (207)624-3401. Questions received after 12:00 noon of Monday prior to bid date will not be answered. Bidders shall not contact any other Departmental staff for clarification of Contract provisions, and the Department will not be responsible for any interpretations so obtained. Hearing impaired persons may call the Telecommunication Device for the Deaf at (207)287-3392.

Specifications and bid forms may be seen at the Maine DOT Building in Augusta, Maine and at the Department of Transportation's Division Office in Dixfield. They may be purchased from the Department between the hours of 8:00 a.m. to 4:30 p.m. by cash, credit card (Visa/Mastercard) or check payable to Treasurer, State of Maine sent to Maine Department of Transportation, Attn.: Mailroom, 16 State House Station, Augusta, Maine 04333-0016. They also may be purchased by telephone at (207)624-3536 between the hours of 8:00 a.m. to 4:30 p.m. Full size plans $00 ($00 by mail). Half size plans $00 ($00 by mail), Bid Book $10 ($13 by mail), Single Sheets $2, payment in advance, all non-refundable.

Each Bid must be made upon blank forms provided by the Department and must be accompanied by a bid bond at 5% of the bid amount or an official bank check, cashier's check, certified check, certificate of deposit, or United States postal money order in the amount of $20,000 payable to Treasurer, State of Maine as a Bid guarantee. A Contract Performance Surety Bond and a Contract Payment Surety Bond, each in the amount of 100 percent of the Contract price, will be required of the successful Bidder.

This Contract is subject to all applicable Federal Laws. This contract is subject to compliance with the Disadvantaged Business Enterprise program requirements as set forth by the Maine Department of Transportation.

All work shall be governed by "State of Maine, Department of Transportation, Standard Specifications, Revision of December 2002", price $10 [$13 by mail], and Standard Details, Revision of December 2002, price $20 [$25 by mail] Standard Detail updates can be found at http://www.state.me.us/mdot/project/design/homepg.htm

The right is hereby reserved to the MDOT to reject any or all Bids.

Augusta, Maine
January 21, 2004

STATE OF MAINE
JOHN E. DORITY
No. 2093
REGISTERED PROFESSIONAL ENGINEER

JOHN E. DORITY
CHIEF ENGINEER

11444.00, 12091.00
October 29, 2003
Supercedes June 26, 2003

SPECIAL PROVISION 102.7.3
ACKNOWLEDGMENT OF BID AMENDMENTS
&
SUBMISSION OF BID BOND VALIDATION NUMBER (IF APPLICABLE)

With this form, the Bidder acknowledges its responsibility to check for all Amendments to the Bid Package. For each Project under Advertisement, Amendments are located at http://www.state.me.us/mdot/comprehensive-list-projects/project-information.php It is the responsibility of the Bidder to determine if there are Amendments to the Project, to download them, and to incorporate them into their Bid Package. The Maine DOT will not post Bid Amendments any later than noon the day before Bid opening.

Amendment Number	Date

The Contractor, for itself, its successors and assigns, hereby acknowledges that it has received all of the above referenced Amendments to the Bid Package. Failure to acknowledge receipt of all Amendments to the Bid Package will be considered a Non-curable Bid Defect in accordance with Section 102.11.1 of the Standard Specifications, Revision of December 2002.

CONTRACTOR

_____
Date

_____
Signature of authorized representative

_____
(Name and Title Printed)

Bid Bond Validation Number _____
(Applicable to annual bid bonds or electronic bid bonds.)

MAINE DEPARTMENT OF TRANSPORTATION

BID

DATE OF OPENING : CALL ORDER :

CONTRACT ID : 011444.00

PROJECTS

NH-1144(400)E
STP-1209(100)X

COUNTY : OXFORD

CONTRACT ID: 011444.00 PROJECT(S): NH-1144(400)E
STP-1209(100)X

CONTRACTOR :_____

LINE NO	ITEM DESCRIPTION	APPROX. QUANTITY AND UNITS	UNIT PRICE DOLLARS	UNIT PRICE CTS	BID AMOUNT DOLLARS	BID AMOUNT CTS
	SECTION 0001 HIGHWAY ITEMS					
0010	202.203 PAVEMENT BUTT JOINTS	425.000 SY				
0020	204.41 REHABILITATION OF EXISTING SHOULDERS, PLAN QUANTITY	1309.000 SY				
0030	307.33 FULL DEPTH RECYCLED PAVEMENT(UNTREATED SHOULDER)	31650.000 SY				
0040	403.207 HOT MIX ASPHALT 19.0 MM HMA	25.000 T				
0050	403.208 HOT MIX ASPHALT 12.5 MM HMA SURFACE	150.000 T				
0060	403.209 HOT MIX ASPHALT 9.5 MM HMA (SIDEWALKS, DRIVES, INCIDENT ALS)	40.000 T				
0070	403.210 HOT MIX ASPHALT 9.5 MM HMA	4700.000 T				
0080	403.211 HOT MIX ASPHALT (SHIMMING)	1700.000 T				
0090	409.15 BITUMINOUS TACK COAT APPLIED	1510.000 G				

CONTRACT ID: 011444.00 PROJECT(S): NH-1144(400)E
STP-1209(100)X

CONTRACTOR :_____

LINE NO	ITEM DESCRIPTION	APPROX. QUANTITY AND UNITS	UNIT PRICE DOLLARS	UNIT PRICE CTS	BID AMOUNT DOLLARS	BID AMOUNT CTS
0100	411.10 UNTREATED AGGREGATE SURFACE COURSE (TRUCK MEASURE)	25.000 CY				
0110	504.069 CONCRETE PIPE TIES	4.000 EA				
0120	603.165 15 INCH REINFORCED CONCRETE PIPE CLASS III	56.000 LF				
0130	603.175 18 INCH REINFORCED CONCRETE PIPE CLASS III	200.000 LF				
0140	603.195 24 INCH REINFORCED CONCRETE PIPE CLASS III	24.000 LF				
0150	603.199 24 INCH CULVERT PIPE OPTION III	320.000 LF				
0160	603.235 48 INCH REINFORCED CONCRETE PIPE CLASS III	80.000 LF				
0170	603.748 REMOVE CONCRETE HEADWALL	16.000 EA				
0180	605.09 6 INCH UNDERDRAIN TYPE B	500.000 LF				
0190	605.10 6 INCH UNDERDRAIN OUTLET	20.000 LF				
0200	606.23 GUARDRAIL TYPE 3C - SINGLE RAIL	875.000 LF				

CONTRACT ID: 011444.00 PROJECT(S): NH-1144(400)E
STP-1209(100)X

CONTRACTOR :_____

LINE NO	ITEM DESCRIPTION	APPROX. QUANTITY AND UNITS	UNIT PRICE DOLLARS	UNIT PRICE CTS	BID AMOUNT DOLLARS	BID AMOUNT CTS
0210	606.231 GUARDRAIL TYPE 3C - 15 FOOT RADIUS AND LESS	12.500 LF				
0220	606.232 GUARDRAIL TYPE 3C - OVER 15 FOOT RADIUS	12.500 LF				
0230	606.265 TERMINAL END - SINGLE RAIL - GALVANIZED STEEL	1.000 EA				
0240	606.35 GUARDRAIL DELINEATOR POST	13.000 EA				
0250	606.357 GUARDRAIL, MODIFY, TYPE 3B	700.000 LF				
0260	606.47 SINGLE WOOD POST	10.000 EA				
0270	606.754 WIDEN SHOULDER FOR GUARDRAIL 350 FLARED TERMINAL	9.000 EA				
0280	606.79 GUARDRAIL 350 FLARED TERMINAL	9.000 EA				
0290	610.08 PLAIN RIPRAP	50.000 CY				
0300	613.319 EROSION CONTROL BLANKET	400.000 SY				

CONTRACT ID: 011444.00 PROJECT(S): NH-1144(400)E
STP-1209(100)X

CONTRACTOR :_____

LINE NO	ITEM DESCRIPTION	APPROX. QUANTITY AND UNITS	UNIT PRICE DOLLARS	UNIT PRICE CTS	BID AMOUNT DOLLARS	BID AMOUNT CTS
0310	618.1401 SEEDING METHOD NUMBER 2 - PLAN QUANTITY	43.000 UN				
0320	619.1201 MULCH - PLAN QUANTITY	43.000 UN				
0330	627.76 TEMPORARY PVMT. MARK LINE, W OR YELLOW	LUMP	LUMP			
0340	629.05 HAND LABOR, STRAIGHT TIME	20.000 HR				
0350	631.10 AIR COMPRESSOR (INCLUDING OPERATOR)	10.000 HR				
0360	631.11 AIR TOOL (INCLUDING OPERATOR)	10.000 HR				
0370	631.12 ALL PURPOSE EXCAVATOR (INCLUDING OPERATOR)	20.000 HR				
0380	631.172 TRUCK - LARGE (INCLUDING OPERATOR)	40.000 HR				
0390	631.32 CULVERT CLEANER (INCLUDING OPERATOR)	30.000 HR				
0400	639.19 FIELD OFFICE TYPE B	1.000 EA				
0410	652.33 DRUM	50.000 EA				

CONTRACT ID: 011444.00 PROJECT(S): NH-1144(400)E
STP-1209(100)X

CONTRACTOR :_____

LINE NO	ITEM DESCRIPTION	APPROX. QUANTITY AND UNITS	UNIT PRICE DOLLARS	UNIT PRICE CTS	BID AMOUNT DOLLARS	BID AMOUNT CTS
0420	652.34 CONE	200.000 EA				
0430	652.35 CONSTRUCTION SIGNS	892.000 SF				
0440	652.36 MAINTENANCE OF TRAFFIC CONTROL DEVICES	87.000 CD				
0450	652.38 FLAGGER	1700.000 HR				
0460	656.75 TEMPORARY SOIL EROSION AND WATER POLLUTION CONTROL	LUMP	LUMP			
0470	659.10 MOBILIZATION	LUMP	LUMP			
	SECTION 0001 TOTAL					
	TOTAL BID					

CONTRACT AGREEMENT, OFFER & AWARD

AGREEMENT made on the date last signed below, by and between the State of Maine, acting through and by its Department of Transportation (Department), an agency of state government with its principal administrative offices located at Child Street, Augusta, Maine, with a mailing address at 16 State House Station, Augusta, Maine 04333-0016, and _____ a corporation or other legal entity organized under the laws of the State of Maine, with its principal place of business located at _____ _____

The Department and the Contractor, in consideration of the mutual promises set forth in this Agreement (the "Contract"), hereby agree as follows:

A. The Work.

The Contractor agrees to complete all Work as specified or indicated in the Contract including Extra Work in conformity with the Contract, NH-1144(400)E, PIN 011444.00; STP-1209(100)X, PIN 012091.00, for the Hot Mix Asphalt Overlay, Drainage Improvements, Shoulder Reclaim and Guardrail Improvements in the towns of Bethel, Woodstock and Oxford, County of Oxford, Maine. The Work includes construction, maintenance during construction, warranty as provided in the Contract, and other incidental work.

The Contractor shall be responsible for furnishing all supervision, labor, equipment, tools supplies, permanent materials and temporary materials required to perform the Work including construction quality control including inspection, testing and documentation, all required documentation at the conclusion of the project, warranting its work and performing all other work indicated in the Contract.

The Department shall have the right to alter the nature and extent of the Work as provided in the Contract; payment to be made as provided in the same.

B. Time.

The Contractor agrees to complete all Work, except warranty work, on or before October 16, 2004**.** Further, the Department may deduct from moneys otherwise due the Contractor, not as a penalty, but as Liquidated Damages in accordance with Sections 107.7 and 107.8 of the State of Maine Department of Transportation Standard Specifications, Revision of December 2002.

C. Price.

The quantities given in the Schedule of Items of the Bid Package will be used as the basis for determining the original Contract amount and for determining the amounts of the required Performance Surety Bond and Payment Surety Bond, and that the amount of this offer is _____

_____

$_____ Performance Bond and Payment Bond each being 100% of the amount of this Contract.

D. Contract.

This Contract, which may be amended, modified, or supplemented in writing only, consists of the Contract documents as defined in the Plans, Standard Specifications, Revision of December 2002, Standard Details Revision of December 2002 as updated through advertisement, Supplemental Specifications, Special Provisions, Contract Agreement; and Contract Bonds. It is agreed and understood that this Contract will be governed by the documents listed above.

E. Certifications.

By signing below, the Contractor hereby certifies that to the best of the Contractor's knowledge and belief:

1. All of the statements, representations, covenants, and/or certifications required or set forth in the Bid and the Bid Documents, including those in Appendix A to Division 100 of the Standard Specifications Revision of December 2002 (Federal Contract Provisions Supplement), and the Contract are still complete and accurate as of the date of this Agreement.

2. The Contractor knows of no legal, contractual, or financial impediment to entering into this Contract.

3. The person signing below is legally authorized by the Contractor to sign this Contract on behalf of the Contractor and to legally bind the Contractor to the terms of the Contract.

F. Offer.

The undersigned, having carefully examined the site of work, the Plans, Standard Specifications Revision of December 2002, Standard Details Revision of December 2002 as updated through advertisement, Supplemental Specifications, Special Provisions, Contract Agreement; and Contract Bonds contained herein for construction of: NH-1144(400)E, PIN 011444.00; STP-1209(100)X, PIN 012091.00, for the Hot Mix Asphalt Overlay, Drainage Improvements, Shoulder Reclaim and Guardrail Improvements in the towns of Bethel, Woodstock and Oxford, County of Oxford, State of Maine, on which bids will be received until the time specified in the "Notice to Contractors" do(es) hereby bid and offer to enter into this contract to supply all the materials, tools, equipment and labor to construct the whole of the Work in strict accordance with the terms and conditions of this Contract at the unit prices in the attached "Schedule of Items".

The Offeror agrees to perform the work required at the price specified above and in accordance with the bids provided in the attached "Schedule of Items" in strict accordance with the terms of this solicitation, and to provide the appropriate insurance and bonds if this offer is accepted by the Government in writing.

As Offeror also agrees:

First: To do any extra work, not covered by the attached "Schedule of Items", which may be ordered by the Resident, and to accept as full compensation the amount determined upon a "Force Account" basis as provided in the Standard Specifications, Revision of December 2002, and as addressed in the contract documents.

Second: That the bid bond at 5% of the bid amount or the official bank check, cashier's check, certificate of deposit or U. S. Postal Money Order in the amount given in the "Notice to Contractors", payable to the Treasurer of the State of Maine and accompanying this bid, shall be forfeited, as liquidated damages, if in case this bid is accepted, and the undersigned shall fail to abide by the terms and conditions of the offer and fail to furnish satisfactory insurance and Contract bonds under the conditions stipulated in the Specifications within 15 days of notice of intent to award the contract.

Third: To begin the Work on the date specified in the Engineer's "Notice to Commence Work" as stated in Section 107.2 of the Standard Specifications Revision of December 2002 and complete the Work within the time limits given in the Special Provisions of this Contract.

Fourth: The Contractor will be bound to the Disadvantaged Business Enterprise (DBE) Requirements contained in the attached Notice (Additional Instructions to Bidders) and submit a completed Contractor's Disadvantaged Business Enterprise Utilization Plan by 4:30pm on the day of bid opening to the Contracts Engineer.

Fifth: That this offer shall remain open for 30 calendar days after the date of opening of bids.

Sixth: The Bidder hereby certifies, to the best of its knowledge and belief that: the Bidder has not, either directly or indirectly, entered into any agreement, participated in any collusion, or otherwise taken any action in restraint of competitive bidding in connection with its bid, and its subsequent contract with the Department.

IN WITNESS WHEREOF, the Contractor, for itself, its successors and assigns, hereby execute two duplicate originals of this Agreement and thereby binds itself to all covenants, terms, and obligations contained in the Contract Documents.

CONTRACTOR

_____	_____
Date	(Signature of Legally Authorized Representative of the Contractor)
_____	_____
Witness	(Name and Title Printed)

G. Award.

Your offer is hereby accepted. This award consummates the Contract, and the documents referenced herein.

MAINE DEPARTMENT OF TRANSPORTATION

_____	_____
Date	By: David A. Cole, Commissioner
_____	
Witness	

CONTRACT AGREEMENT, OFFER & AWARD

AGREEMENT made on the date last signed below, by and between the State of Maine, acting through and by its Department of Transportation (Department), an agency of state government with its principal administrative offices located at Child Street, Augusta, Maine, with a mailing address at 16 State House Station, Augusta, Maine 04333-0016, and _____ a corporation or other legal entity organized under the laws of the State of Maine, with its principal place of business located at _____ _____

The Department and the Contractor, in consideration of the mutual promises set forth in this Agreement (the "Contract"), hereby agree as follows:

A. The Work.

The Contractor agrees to complete all Work as specified or indicated in the Contract including Extra Work in conformity with the Contract, NH-1144(400)E, PIN 011444.00; STP-1209(100)X, PIN 012091.00, for the Hot Mix Asphalt Overlay, Drainage Improvements, Shoulder Reclaim and Guardrail Improvements in the towns of Bethel, Woodstock and Oxford, County of Oxford, Maine. The Work includes construction, maintenance during construction, warranty as provided in the Contract, and other incidental work.

The Contractor shall be responsible for furnishing all supervision, labor, equipment, tools supplies, permanent materials and temporary materials required to perform the Work including construction quality control including inspection, testing and documentation, all required documentation at the conclusion of the project, warranting its work and performing all other work indicated in the Contract.

The Department shall have the right to alter the nature and extent of the Work as provided in the Contract; payment to be made as provided in the same.

B. Time.

The Contractor agrees to complete all Work, except warranty work, on or before October 16, 2004**.** Further, the Department may deduct from moneys otherwise due the Contractor, not as a penalty, but as Liquidated Damages in accordance with Sections 107.7 and 107.8 of the State of Maine Department of Transportation Standard Specifications, Revision of December 2002.

C. Price.

The quantities given in the Schedule of Items of the Bid Package will be used as the basis for determining the original Contract amount and for determining the amounts of the required Performance Surety Bond and Payment Surety Bond, and that the amount of this offer is _____

_____

$_____ Performance Bond and Payment Bond each being 100% of the amount of this Contract.

D. Contract.

This Contract, which may be amended, modified, or supplemented in writing only, consists of the Contract documents as defined in the Plans, Standard Specifications, Revision of December 2002, Standard Details Revision of December 2002 as updated through advertisement, Supplemental Specifications, Special Provisions, Contract Agreement; and Contract Bonds. It is agreed and understood that this Contract will be governed by the documents listed above.

E. Certifications.

By signing below, the Contractor hereby certifies that to the best of the Contractor's knowledge and belief:

1. All of the statements, representations, covenants, and/or certifications required or set forth in the Bid and the Bid Documents, including those in Appendix A to Division 100 of the Standard Specifications Revision of December 2002 (Federal Contract Provisions Supplement), and the Contract are still complete and accurate as of the date of this Agreement.

2. The Contractor knows of no legal, contractual, or financial impediment to entering into this Contract.

3. The person signing below is legally authorized by the Contractor to sign this Contract on behalf of the Contractor and to legally bind the Contractor to the terms of the Contract.

F. Offer.

The undersigned, having carefully examined the site of work, the Plans, Standard Specifications Revision of December 2002, Standard Details Revision of December 2002 as updated through advertisement, Supplemental Specifications, Special Provisions, Contract Agreement; and Contract Bonds contained herein for construction of: NH-1144(400)E, PIN 011444.00; STP-1209(100)X, PIN 012091.00, for the Hot Mix Asphalt Overlay, Drainage Improvements, Shoulder Reclaim and Guardrail Improvements in the towns of Bethel, Woodstock and Oxford, County of Oxford, State of Maine, on which bids will be received until the time specified in the "Notice to Contractors" do(es) hereby bid and offer to enter into this contract to supply all the materials, tools, equipment and labor to construct the whole of the Work in strict accordance with the terms and conditions of this Contract at the unit prices in the attached "Schedule of Items".

The Offeror agrees to perform the work required at the price specified above and in accordance with the bids provided in the attached "Schedule of Items" in strict accordance with the terms of this solicitation, and to provide the appropriate insurance and bonds if this offer is accepted by the Government in writing.

As Offeror also agrees:

First: To do any extra work, not covered by the attached "Schedule of Items", which may be ordered by the Resident, and to accept as full compensation the amount determined upon a "Force Account" basis as provided in the Standard Specifications, Revision of December 2002, and as addressed in the contract documents.

Second: That the bid bond at 5% of the bid amount or the official bank check, cashier's check, certificate of deposit or U. S. Postal Money Order in the amount given in the "Notice to Contractors", payable to the Treasurer of the State of Maine and accompanying this bid, shall be forfeited, as liquidated damages, if in case this bid is accepted, and the undersigned shall fail to abide by the terms and conditions of the offer and fail to furnish satisfactory insurance and Contract bonds under the conditions stipulated in the Specifications within 15 days of notice of intent to award the contract.

Third: To begin the Work on the date specified in the Engineer's "Notice to Commence Work" as stated in Section 107.2 of the Standard Specifications Revision of December 2002 and complete the Work within the time limits given in the Special Provisions of this Contract.

Fourth: The Contractor will be bound to the Disadvantaged Business Enterprise (DBE) Requirements contained in the attached Notice (Additional Instructions to Bidders) and submit a completed Contractor's Disadvantaged Business Enterprise Utilization Plan by 4:30pm on the day of bid opening to the Contracts Engineer.

Fifth: That this offer shall remain open for 30 calendar days after the date of opening of bids.

Sixth: The Bidder hereby certifies, to the best of its knowledge and belief that: the Bidder has not, either directly or indirectly, entered into any agreement, participated in any collusion, or otherwise taken any action in restraint of competitive bidding in connection with its bid, and its subsequent contract with the Department.

IN WITNESS WHEREOF, the Contractor, for itself, its successors and assigns, hereby execute two duplicate originals of this Agreement and thereby binds itself to all covenants, terms, and obligations contained in the Contract Documents.

CONTRACTOR

_____	_____
Date	(Signature of Legally Authorized Representative of the Contractor)
_____	_____
Witness	(Name and Title Printed)

G. Award.

Your offer is hereby accepted. This award consummates the Contract, and the documents referenced herein.

MAINE DEPARTMENT OF TRANSPORTATION

_____	_____
Date	By: David A. Cole, Commissioner
_____	
Witness	

CONTRACT AGREEMENT, OFFER & AWARD

AGREEMENT made on the date last signed below, by and between the State of Maine, acting through and by its Department of Transportation (Department), an agency of state government with its principal administrative offices located at 1705 U.S. Route 202, Winthrop, Maine, with a mailing address at 16 State House Station, Augusta, Maine 04333-0016, and **(Name of the firm bidding the job)** a corporation or other legal entity organized under the laws of the State of Maine, with its principal place of business located at **(address of the firm bidding the job)**

The Department and the Contractor, in consideration of the mutual promises set forth in this Agreement (the "Contract"), hereby agree as follows:

SAMPLE

A. The Work.

The Contractor agrees to complete all Work as specified or indicated in the Contract including Extra Work in conformity with the Contract, PIN No. **1224.00**, for the **Hot Mix Asphalt Overlay** in the town/city of **West Eastport**, County of **Washington**, Maine. The Work includes construction, maintenance during construction, warranty as provided in the Contract, and other incidental work.

The Contractor shall be responsible for furnishing all supervision, labor, equipment, tools supplies, permanent materials and temporary materials required to perform the Work including construction quality control including inspection, testing and documentation, all required documentation at the conclusion of the project, warranting its work and performing all other work indicated in the Contract.

The Department shall have the right to alter the nature and extent of the Work as provided in the Contract; payment to be made as provided in the same.

B. Time.

The Contractor agrees to complete all Work, except warranty work, on or before **November 15**, 2003**.** Further, the Department may deduct from moneys otherwise due the Contractor, not as a penalty, but as Liquidated Damages in accordance with Sections 107.7 and 107.8 of the State of Maine Department of Transportation Standard Specifications, Revision of December 2002.

C. Price.

The quantities given in the Schedule of Items of the Bid Package will be used as the basis for determining the original Contract amount and for determining the amounts of the required Performance Surety Bond and Payment Surety Bond, and that the amount of this offer is **____(Place bid here in alphabetical form such as One Hundred and Two dollars and 10 cents)**
$_ (repeat bid here in numerical terms, such as $102.10)_____ Performance Bond and Payment Bond each being 100% of the amount of this Contract.

D. Contract.

This Contract, which may be amended, modified, or supplemented in writing only, consists of the Contract documents as defined in the Plans, Standard Specifications, Revision of December 2002, Standard Details Revision of December 2002, Supplemental Specifications, Special Provisions, Contract Agreement; and Contract Bonds. It is agreed and understood that this Contract will be governed by the documents listed above.

E. Certifications.

By signing below, the Contractor hereby certifies that to the best of the Contractor's knowledge and belief:

1. All of the statements, representations, covenants, and/or certifications required or set forth in the Bid and the Bid Documents, including those in Appendix A to Division 100 of the Standard Specifications Revision of December 2002 (Federal Contract Provisions Supplement), and the Contract are still complete and accurate as of the date of this Agreement.

2. The Contractor knows of no legal, contractual, or financial impediment to entering into this Contract.

3. The person signing below is legally authorized by the Contractor to sign this Contract on behalf of the Contractor and to legally bind the Contractor to the terms of the Contract.

F. Offer.

SAMPLE

The undersigned, having carefully examined the site of work, the Plans, Standard Specifications, Revision of December 2002, Standard Details Revision of December 2002, Supplemental Specifications, Special Provisions, Contract Agreement; and Contract Bonds contained herein for construction of:

_____PIN 1234.00 West Eastport, Hot Mix Asphalt Overlay_____,
State of Maine, on which bids will be received until the time specified in the "Notice to Contractors" do(es) hereby bid and offer to enter into this contract to supply all the materials, tools, equipment and labor to construct the whole of the Work in strict accordance with the terms and conditions of this Contract at the unit prices in the attached "Schedule of Items".

The Offeror agrees to perform the work required at the price specified above and in accordance with the bids provided in the attached "Schedule of Items" in strict accordance with the terms of this solicitation, and to provide the appropriate insurance and bonds if this offer is accepted by the Government in writing.

SAMPLE

As Offeror also agrees:

First: To do any extra work, not covered by the attached "Schedule of Items", which may be ordered by the Resident, and to accept as full compensation the amount determined upon a "Force Account" basis as provided in the Standard Specifications, Revision of December 2002, and as addressed in the contract documents.

Second: That the bid bond at 5% of the bid amount or the official bank check, cashier's check, certificate of deposit or U. S. Postal Money Order in the amount given in the "Notice to Contractors", payable to the Treasurer of the State of Maine and accompanying this bid, shall be forfeited, as liquidated damages, if in case this bid is accepted, and the undersigned shall fail to abide by the terms and conditions of the offer and fail to furnish satisfactory insurance and Contract bonds under the conditions stipulated in the Specifications within 15 days of notice of intent to award the contract.

Third: To begin the Work on the date specified in the Engineer's "Notice to Commence Work" as stated in Section 107.2 of the Standard Specifications Revision of 2002 and complete the Work within the time limits given in the Special Provisions of this Contract.

Fourth: The Contractor will be bound to the Disadvantaged Business Enterprise (DBE) Requirements contained in the attached Notice (Additional Instructions to Bidders) and submit a completed Contractor's Disadvantaged Business Enterprise Utilization Plan by 4:30pm on the day of bid opening to the Contracts Engineer.

Fifth: That this offer shall remain open for 30 calendar days after the date of opening of bids.

Sixth: The Bidder hereby certifies, to the best of its knowledge and belief that: the Bidder has not, either directly or indirectly, entered into any agreement, participated in any collusion, or otherwise taken any action in restraint of competitive bidding in connection with its bid, and its subsequent contract with the Department.

IN WITNESS WHEREOF, the Contractor, for itself, its successors and assigns, hereby execute two duplicate originals of this Agreement and thereby binds itself to all covenants, terms, and obligations contained in the Contract Documents.

CONTRACTOR

_____	**(Sign Here)**_____
Date	(Signature of Legally Authorized Representative of the Contractor)
____(**Witness Sign Here)**_____	**(Print Name Here)**_____
Witness	(Name and Title Printed)

SAMPLE

G. Award.

Your offer is hereby accepted. This award consummates the Contract, and the documents referenced herein.

MAINE DEPARTMENT OF TRANSPORTATION

_____	_____
Date	By: David A. Cole, Commissioner

_____
(Witness)

BOND # _____

CONTRACT PERFORMANCE BOND
(Surety Company Form)

KNOW ALL MEN BY THESE PRESENTS: That _____ _____ **and the State of** _____, as principal, and…….....,
a corporation duly organized under the laws of the State of ..... and having a usual place of business ....,
as Surety, are held and firmly bound unto the Treasurer of the State of Maine in the sum of _____ **and 00/100 Dollars ($)**, to be paid said Treasurer of the State of Maine or his successors in office, for which payment well and truly to be made, Principal and Surety bind themselves, their heirs, executors and administrators, successors and assigns, jointly and severally by these presents.

The condition of this obligation is such that if the Principal designated as Contractor in the Contract to construct Project Number _____ in the Municipality of _____ promptly and faithfully performs the Contract, then this obligation shall be null and void; otherwise it shall remain in full force and effect.

The Surety hereby waives notice of any alteration or extension of time made by the State of Maine.

Signed and sealed this ..... day of ....., 20….. .

WITNESSES:	SIGNATURES:
	CONTRACTOR:
Signature.....	.....….....
Print Name Legibly	Print Name Legibly ...…….....
	SURETY:
Signature	.....…….....
Print Name Legibly	Print Name Legibly .....
SURETY ADDRESS:	NAME OF LOCAL AGENCY:
.....	ADDRESS .....
.....	...…….....
.....	.....…….....
TELEPHONE.....	.....…….....

SAMPLE

BOND # _____

CONTRACT PAYMENT BOND
(Surety Company Form)

KNOW ALL MEN BY THESE PRESENTS: That _____ _____ **and the State of** _____, as principal, and.....….....
a corporation duly organized under the laws of the State of ..... and having a usual place of business in .....……., as Surety, are held and firmly bound unto the Treasurer of the State of Maine for the use and benefit of claimants as herein below defined, in the sum of _____ **and 00/100 Dollars ($)** for the payment whereof Principal and Surety bind themselves, their heirs, executors and administrators, successors and assigns, jointly and severally by these presents.

The condition of this obligation is such that if the Principal designated as Contractor in the Contract to construct Project Number _____ in the Municipality of _____ promptly satisfies all claims and demands incurred for all labor and material, used or required by him in connection with the work contemplated by said Contract, and fully reimburses the obligee for all outlay and expense which the obligee may incur in making good any default of said Principal, then this obligation shall be null and void; otherwise it shall remain in full force and effect.

A claimant is defined as one having a direct contract with the Principal or with a Subcontractor of the Principal for labor, material or both, used or reasonably required for use in the performance of the contract.

Signed and sealed this ..... day of ...……....., 20 ... .

WITNESS:	SIGNATURES:
	CONTRACTOR:
Signature…….....	.....….....
Print Name Legibly .....……..	Print Name Legibly ….....
	SURETY:
Signature.....	...….....
Print Name Legibly	Print Name Legibly ….....
SURETY ADDRESS:	NAME OF LOCAL AGENCY:
...….....	ADDRESS ….....
.....	…….....….....
TELEPHONE	…….....….....

SAMPLE

January 26, 1999

SPECIAL PROVISION
PARTNERING

The successful bidder will have the opportunity to enter into a cooperative partnership agreement with the State Department of Transportation for the contract. The objective of this agreement is the effective completion of the work on time and to the standard of quality that will be a source of pride to both the State and the Contractor. The partnering agreement will not affect the terms of the contract. It is intended only to establish an environment of cooperation between the parties. If the partnering agreement is accepted.

1. Contractor shall select and provide a third-party facilitator to conduct the team building workshop for the Contractor and Department personnel. Facilitator selection shall require Department concurrence. The cost for the facilitator and his associated expenses will be shared equally by the Department on the next monthly estimate, following receipt of invoice(s) from the Contractor, on an extra work basis.

2. Contractor and Department will exchange lists of the key personnel to be participants in the workshop. The list will contain the name and job title of each person, a contact phone number, and the address for job related correspondence.

3. The Contractor shall select the location and make all arrangements for space as required by facilitator, and for any meals required. This cost to be shared equally.

4. A working arrangement for the partnership will be agreed upon in writing at the workshop. The arrangement will set out the mutually recognized goals and expectation of the parties.

5. The Contractor and the Department agree to make an effort to maintain identified key personnel assigned to the work for its duration. A timely notice by each shall be given if changes by either must be made.

6. Project issues shall be processed in the manner agreed upon by the parties during the orientation.

7. Follow-up workshops may be held periodically throughout the duration of the contract as agreed by the Contractor and the Department.

8. The Partnering Agreement is not intended to be a legal document. Failure by either party to follow the process identified will not be grounds for any claim under the contract.

9. ARE YOU INTERESTED IN THIS OPPORTUNITY? YES _____ NO _____

STATE OF MAINE
DEPARTMENT OF TRANSPORTATION

WOODSTOCK

OXFORD

RTE. 26

NH-1144(400)E

PROJECT LENGTH : 2.68 Miles

LEVEL 2

LOCATION MAP

2 0 2 4

Scale in Miles

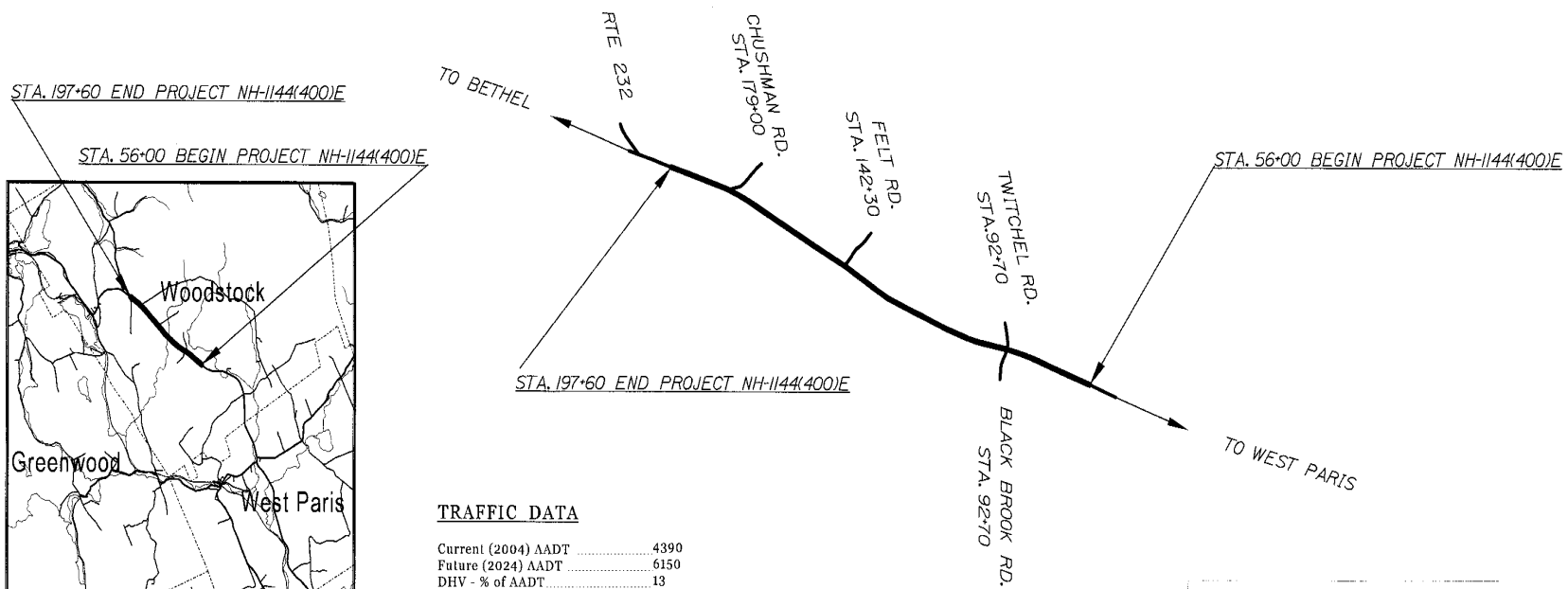

TRAFFIC DATA

Current (2004) AADT	4390
Future (2024) AADT	6150
DHV - % of AADT	13
Design Hour Volume	800
% Heavy Trucks (AADT)	13
% Heavy Trucks (DHV)	10
Directional Distribution (DHV)	60
18 kip Equivalent P 2.0	685
18 kip Equivalent P 2.5	652
Design Speed (mph)	AS POSTED

SCOPE OF WORK

30mm HMA OVERLAY WITH MAIN LINE SHIM, SHOULDER RECLAIM, DRAINAGE, AND OTHER INCIDENTAL WORK

PIN 11444.00

11444.00

STATE OF MAINE
DEPARTMENT OF TRANSPORTATION

APPROVED

	DATE
COMMISSIONER	1/15/04
CHIEF ENGINEER	01/15/04

PROJECT INFORMATION	
PROGRAM	REGIONAL (DIV. 7)
PROJECT MANAGER	R. CRAWFORD
DESIGNER	WM. BOURNE
CONSULTANT	
PROJECT RESIDENT	
CONTRACTOR	
PROJECT COMPLETION DATE	

SIGNATURE 9941

P.E. NUMBER

1/15/04

DATE

WOODSTOCK
RTE. 26

TITLE SHEET

SHEET NUMBER

1

OF _

Filename: ...\00\HIGHWAY\MSTA\001_Title.dgn Division: HIGHWAY Username: guy.ber.thiaume Date:1/14/2004

1¼" HOT MIX ASPHALT OVERLAY

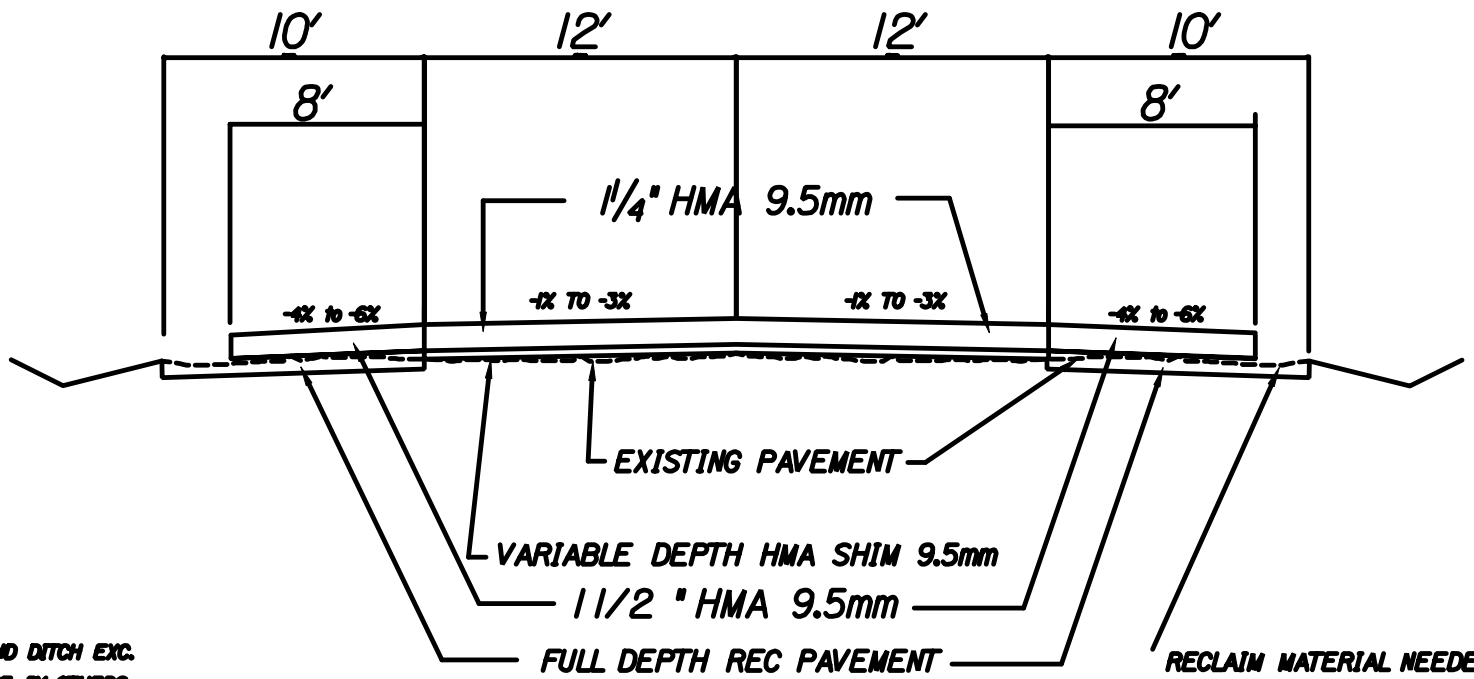

NOTE: INSLOPE AND DITCH EXC. TO BE DONE BY OTHERS

RECLAIM MATERIAL NEEDED TO BRING SHOULDERS TO GRADE SHALL BE OBTAINED FROM OUTSIDE 2' OF EXISTING SHOULDER

STATE OF MAINE
DEPARTMENT OF TRANSPORTATION

11444.00

PIN 11444.00

HIGHWAY PLANS

		BY	DATE
PROJ. MANAGER	K. CRAMPDAG		
DESIGN-DETAILED	B. BOURNE		
CHECKED-REVIEWED			
DESIGN-DETAILED			
CHECKED-REVIEWED			
REVISIONS 1			
REVISIONS 2			
REVISIONS 3			
REVISIONS 4			

SIGNATURE

P.E. NUMBER

DATE

WOODSTOCK
RTE. 26

TYPICAL SECTIONS

SHEET NUMBER

1

OF 2

SUPERELEVATED TYPICAL

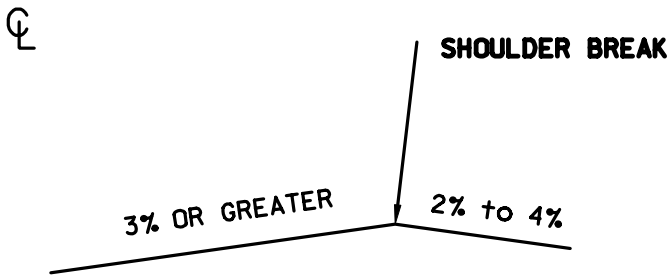

UNDERDRAIN TYPICAL

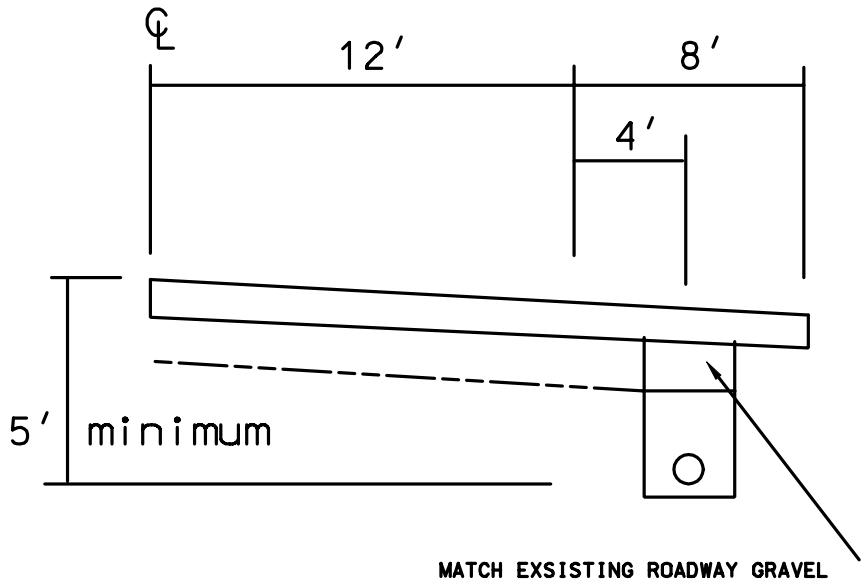

STATE OF MAINE
DEPARTMENT OF TRANSPORTATION

11444.00

PIN 11444.00

HIGHWAY PLANS

PROJ. MANAGER	R. CRAWFORD	BY	DATE
DESIGN-DETAILED	B. BOURNE		
CHECKED-REVIEWED			
DESIGN-STAGE 2			
DESIGN-STAGE 1			
REVISIONS 1			
REVISIONS 2			
REVISIONS 3			
REVISIONS 4			

SIGNATURE

P.R. NUMBER

DATE

WOODSTOCK
RTE. 26

TYPICAL SECTIONS

SHEET NUMBER
2
OF 2

Project Stationing

End Project	**197+60**	
CMP 10	**197+57**	
CMP 16	**187+69**	
	179+00	**Chushman Road**
CMP 28/72	**158+78**	
	142+30	**Felt Road**
CMP 40	**135+93**	
BPTRL 2/90	**121+83**	
CMP 585	**109+47**	
Black Brook Road	**92+70**	**Twitchel Road**
CMP 580	**90+58**	
CMP 575	**83+13**	
CMP 572	**75+75**	
CMP 568	**66+09**	
CMP 564	**57+43**	
Begin Project	**56+00**	

Striping Pattern

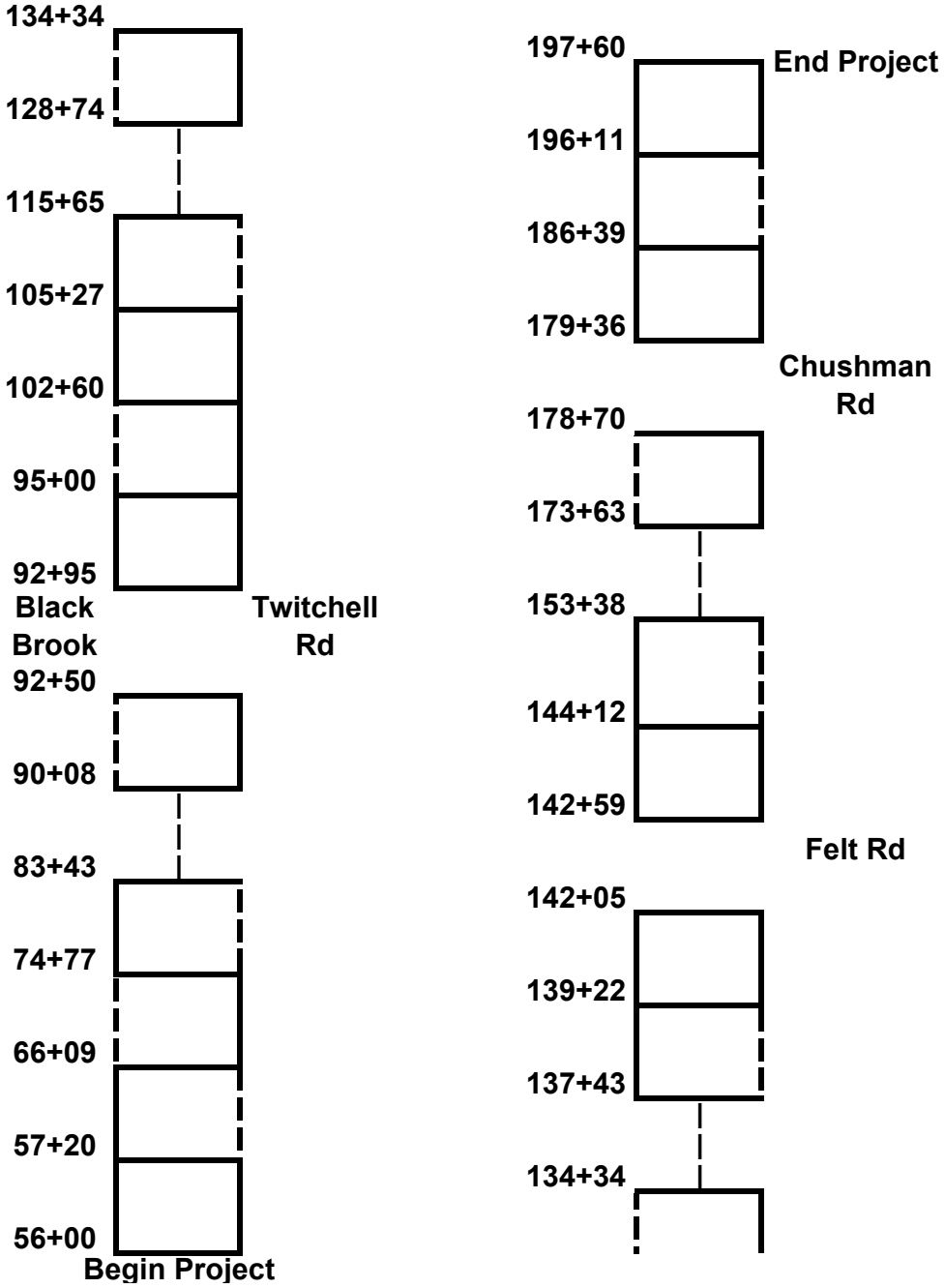

Superelevations

Curve # 1

Left	Station	Right
3.0	56+50	-3.0
3.0	61+50	-3.0
2.0	62+00	-3.0
1.0	62+50	-3.0
0.0	63+00	-3.0
-1.0	63+50	-3.0
-2.0	64+00	-2.0

Curve # 2 & 3

Left	Station	Right
-2.0	80+50	-2.0
-2.0	81+00	-1.0
-2.0	81+50	0.0
-2.0	82+00	1.0
-3.0	82+50	2.0
-3.0	93+50	2.0
-3.0	94+00	1.0
-3.0	94+50	0.0
-3.0	95+00	-1.0
-3.0	95+50	-2.0
-3.0	96+00	-3.0
-2.0	96+50	-3.0
-1.0	97+00	-3.0
0.0	97+50	-3.0
1.0	98+00	-3.0
2.0	98+50	-3.0
2.0	108+50	-3.0
1.0	109+00	-3.0
0.0	109+50	-3.0
-1.0	110+00	-3.0
-2.0	110+50	-2.0

Superelevations

Curve # 4 & 5

Left	Station	Right
-2.0	119+00	-2.0
-2.0	119+50	-3.0
-2.0	121+00	-3.0
-1.0	121+50	-3.0
0.0	122+00	-3.0
1.0	122+50	-3.0
2.0	123+00	-3.0
3.0	123+50	-3.0
3.0	130+50	-3.0
2.0	131+00	-3.0
1.0	131+50	-3.0
0.0	132+00	-3.0
-1.0	132+50	-3.0
-2.0	133+00	-3.0
-2.0	133+50	-3.0
-2.0	134+00	-2.0
-2.0	134+50	-1.0
-2.0	135+00	0.0
-2.0	135+50	1.0
-3.0	136+00	2.0
-3.0	139+50	2.0
-2.0	140+00	2.0
-2.0	140+50	1.0
-2.0	141+00	0.0
-2.0	141+50	-1.0
-2.0	142+00	-2.0

Superelevations

Curve # 6

Left	Station	Right
-2.0	170+50	-2.0
-3.0	171+00	-2.0
-3.0	171+50	-2.0
-3.0	172+00	-2.0
-3.0	172+50	-1.0
-3.0	173+00	0.0
-3.0	173+50	1.0
-3.0	174+00	2.0
-3.0	185+50	2.0
-3.0	186+00	1.0
-3.0	186+50	0.0
-3.0	187+00	-1.0
-2.0	187+50	-2.0

Construction Notes

Item # 202.203 Pavement Butt Joints

Station	
56+00	Begin Project
92+65 lt	Black Brook Rd
92+65 rt	Twitchell Rd
142+09 rt	Felt Rd
197+60	End Project
Paved Drives	2

Item # 403.207 Hot Mix Asphalt 19.0 MM HMA

This item to be used for permanent pavement in cross trenches

Item # 307.33 Full Depth Reclaim Pavement Untreated Shoulders

Station to Station	
56+00 to 197+60 lt/rt	
179+00 rt	Chushman RD

Item # 504.069 Concrete Pipe Ties

Station	Number
122+09 lt	2
122+09 rt	2

Item # 603.165 15 inch RCP Class 3

Station	Length (ft)	Notes
197+70 lt	8	Remove Metal and Extend
197+70 rt	16	Remove Metal and Extend
181+36 rt	16	Extension
144+08 rt	16	Extension

Item # 603.175 18 inch RCP Class 3

Station	Length (Ft)	Notes
70+53 rt	8	Extension
70+53 lt	16	Extension
103+73 rt	16	Extension
103+73 lt	16	Extension
107+36 lt	16	Extension
126+98	80	Replacement
136+00 rt	8	Extension
136+00 lt	16	Extension
176+28 rt	8	Extension
190+92 rt	8	Extension
190+92 lt	8	Extension

Item # 603.195 24 inch RCP Class 3

Station	Length (Ft)	Notes
63+42 lt	16	Extension
63+42 rt	8	Extension

Construction Notes

Item # 603.199 24 inch Culvert Pipe Option 3

Station	Length (Ft)	Notes
87+67	80	Replacement
114+94	80	Replacement
154+19	80	Replacement
158+18	80	Replacement

Item # 603.235 48 inch RCP Class 3

Station	Length (Ft)	Notes
122+09	80	Replacement

Item # 603.748 Remove Concrete Headwall

Station	EA
63+42 lt / rt	2
70+53 lt / rt	2
103+73 lt / rt	2
107+36 lt / rt	2
110+22 rt	1
136+00 lt / rt	2
141+76 lt	1
144+08 lt	1
176+28 rt	1
190+92 lt / rt	2

Item # 605.09 Underdrain Type B

Station to Station	Length (Ft)	Notes
169+80 to 172+30	**250**	
112+44 to 114+94	**250**	**Outlet into new X-pipe**

Item # 605.10 Underdrain Type B Outlet

Station to Station	Length (Ft)
169+60 to 169+80	**20**

Item # 606.47 Single Wood Post

Locations to be determined in the field.

Item # 610.08 Plain RipRap

Locations to determined in the field

Item # 631.32 Culvert Cleaner (inc. Operator)

To be used in the first 2 weeks of operations to asses the conditions of existing pipes.

GENERAL NOTES

1. All joints between existing and proposed hot bituminous pavement shall be butted. Payment shall be made under Item 202.203 Pavement Butt Joint.

2. Construct Butt Joints at all paved drives and entrances.

3. The Contractor shall place suitable existing material, or other material acceptable to the Resident, on all pavement edges to allow no greater than a 40 mm [1 ½ in] drop-off and be graded to 4:1 or flatter. Payment to be incidental to the contract.

4. All waste material not used on the project shall be disposed of off the project in waste areas approved by the Resident

5. Any damage to the slopes caused by the Contractor's equipment, personnel, or operation shall be repaired to the satisfaction of the Resident. All work, equipment and materials required to make repairs shall be at the Contractor's expense.

6. A one meter [3 ft] paved lip shall be placed at all gravel entrances, except woods and field entrances, unless otherwise directed by the Resident.

7. Item # 411.10, Untreated Aggregate Surface Course, may also meet the gradation requirements of item # 204.20, Add Shoulder Aggregate.

8. Any necessary cleaning of existing pavement prior to paving shall be incidental to the related paving items.

9. All existing paved shoulders and widenings to be resurfaced as directed by the Resident.

10. The following shall be incidental to the 603 item(s):
    Any cutting of existing culverts and or connectors necessary to install new culverts replacements or extensions
    All pipe excavation including any cutting and removal of pavement
    All ditching at pipe ends
    Furnishing, placing, grading, and compacting of any new gravel and/or fill material including Granular Borrow used under pipes and for temporary detours to maintain traffic during pipe installation (excavation is also incidental).
    Granular Borrow under the pipe shall meet the requirements for Underwater Backfill
    All work necessary to connect to existing pipes
    Flow lines may be changed by 0.5M [1.5 ft]
    Any necessary clearing of brush and small trees at culvert ends

GENERAL NOTES

11. When super elevation exceeds the slope of the low side shoulder, the shoulder will have same slope as traveled way.

12. No existing drainage shall be abandoned, removed or plugged without prior approval of the Resident.

13. Existing culverts and catch basins will be cleaned as directed by the Resident under the appropriate Pay Items.

14. As directed by the Resident, all existing Underdrain Outlets shall be located, cleaned out, and ditched as required or replaced as necessary. Payment will be made under appropriate hourly contract items.

15. All connections for Underdrain to roadway culverts will be incidental to U.D. pipe items.

16. Trim all tree branches to 6 m [20 ft] above pavement. Payment shall be incidental to Contract.

17. No separate payment for Superintendent or Foreman will be made for the supervision of equipment being paid under appropriate rental items.

18. "Undetermined Locations" shall be determined by the Resident.

19. Stations referenced are approximate.

20. All work shall be done in accordance with the Maine Department of Transportation's Best Management Practices for Erosion Control & Sediment Control, January, 2000.

21. MDOT will final stripe the project. The Contractor is responsible for transferring the existing striping pattern to the surface course.

22. Dredge Material (See MDOT Standard Specifications § 101.2) is regulated as a Special Waste. Fifty cubic yards or less of Dredge Material **Beneficially Used in the area adjacent to and draining into the dredged water body** is exempt from regulation. The Contractor shall ensure that Dredge Material is placed into the fill areas specified by MDOT. No more than the fifty cubic yards (38 cubic meters) of Dredge Material may be excavated without authorization from the Engineer. Any Dredge Material not Beneficial Used (excess Dredge Material) shall be dispose of at a landfill licensed by the Maine Department of Environmental Protection to accept Special Waste. The Contractor shall be responsible for making all necessary arrangements for dewatering and proper disposal of the Dredge Material, including any additional laboratory testing, in accordance with the landfill's license. The Contractor shall provide documentation to the Engineer that any such Dredge Material was disposed of as specified.

STATE OF MAINE
DEPARTMENT OF TRANSPORTATION

BETHEL, WOODSTOCK, OXFORD

OXFORD COUNTY

RTE. 26

STP-1209(100)X

GUARDRAIL AND SHOULDER PAVING

END PROJECT STP-1209(100)X

BEGIN PROJECT STP-1209(100)X

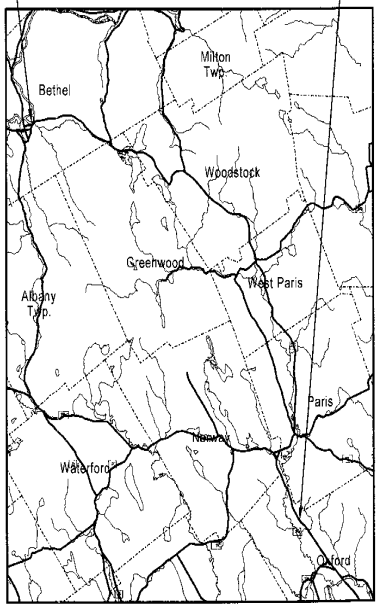

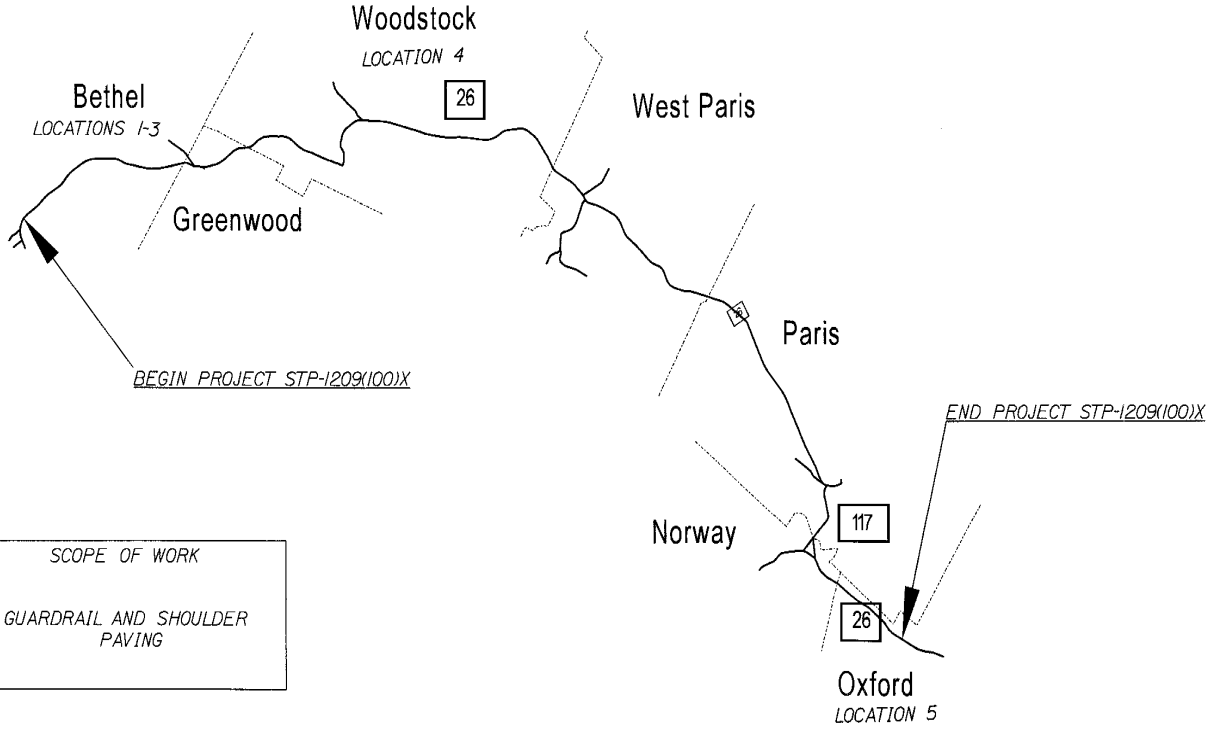

SCOPE OF WORK

GUARDRAIL AND SHOULDER PAVING

PIN 12091.00

12091.00

BETHEL, WOODSTOCK, OXFORD
RTE. 26

TITLE SHEET

PROJECT INFORMATION	
PROGRAM	REGIONAL (BW 7)
PROJECT MANAGER	R. CRAWFORD
DESIGNER	
CONSULTANT	
PROJECT RESIDENT	
CONTRACTOR	
PROJECT COMPLETION DATE	

SIGNATURE
P.E. NUMBER 8941
DATE 1/15/04

STATE OF MAINE
DEPARTMENT OF TRANSPORTATION

APPROVED

	DATE
COMMISSIONER:	1/15/04
CHIEF ENGINEER:	01/15/04

Filename: ...\00\HIGHWAY\MSTA\001_Title.dgn Division: HIGHWAY Username: guy.berthiaume Date:1/14/2004

Section I
Guardrail Rehabilitation Route 2 Easterly

Guardrail Rehabilitation on Route 26, Bethel, Southeasterly

The following locations are stationed from the intersection of Route 2 & Parkway Street. =00+00

Location 1 Bethel R.L.M. 68.22

Item 204.41 Rehab existing shoulder, plan quantity
25+53 – 31+07 Rt 4 Foot Width +/-

Item 403.208 H.M.A. 12.5mm 1.5 inches of depth
Pave rehabbed shoulders to 3 inches of existing posts 4 foot width +/-
Pave 350 widenings per Standard Details

Item 606.35 Guardrail delineator post
26+21, 26+57, 30+02 Rt

Item 606.357 Guardrail modify, Type 3b
26+57-30+02 Rt (Add wood or polymer block outs. Remove plate washers / Adjust.)

Guardrail Remove & Dispose
26+21-26+57 Rt Beam - Incidental
30+02-31+07 Rt Beam - Incidental

Item 606.754 Widen shoulder for 350 end treatment
25+52-26+57 Rt
30+02-30+38 Rt

Item 606.79 Guardrail 350 Flared Terminal
25+56-26+57 Rt
30+02-30+38 Rt

Location 2 Bethel R.L.M. 68.22

Item 204.41 Rehab of existing shoulder, Plan Quantity
25+52-31+07 Lt 4 Foot width +/-

Item 403.208 12.5mm 1.5 inch Depth
Pave rehabbed shoulder to 3 inches of posts
Pave 350 widening per Standard Detail

Item 606.35 Guardrail Delineator Post
26+57, 30+02, 30+38 Lt

Item 606.357 Guardrail Modify Type 3B
26+57-30+02 Lt (Add wood or polymer block outs. Remove plate washers / adjust.)

Guardrail Remove & Dispose
30+02-30+38 Lt Beam - Incidental

Item 606.754 Widen shoulder for 350 End Treatment
30+02-31+07 Lt
24+47-25+52 Lt

Item 606.79 Guardrail 350 Flared Terminal
30+02-30+38 Lt
25+16-25+52 Lt

Location 3 Bethel R.L.M. 65.55

Item 204.41 Rehab existing shoulder, Plan Quantity
166+63-170+54 Lt 8 Foot width +/- to 22' lt

Item 403.208 H.M.A. 12.5mm 1.5 inches of depth
Pave rehabbed shoulder
Pave 350 widening per Standard Detail

Item 606.23 Guardrail Type 3C - Single Rail
167+68-170+18 Lt Face @ 20' lt.

Item 606.35 Guardrail Delineator Post
167+68, 170+18 Lt

Guardrail Remove & Dispose
282 Feet ± Cable Incidental

Item 606.754 Widen shoulder for Guardrail 350 Flared Terminal
166+63-167+68 Lt
170+18-171+23 Lt.

Item 606.79 Guardrail 350 Flared Terminal
167+32-167+68 Lt
170+18-170+54 Lt

Location 4 (Bryant Pond) Woodstock R.L.M. 60.53

Item 204.41 Rehab existing shoulder, Plan Quantity
467+49-474+48 Lt 4 Foot width +/- from edge of existing pavement

Item 403.208 H.M.A. 12.5mm 1.5 inches of depth
Pave rehabed shoulder
Pave 350 widening per Standard Detail

Item 606.23 Guardrail Type 3C-Single Rail
468+54-473+43 Lt Face of rail 1' back from existing edge of pavement.

Item 606.35 Guardrail Delineator Post
468+54, 476+43, 473+79 Lt

Guardrail Remove & Dispose
404 Feet ± Cable Incidental

Item 606.754 Widen Shoulder for Guardrail 350 Flared Terminal
467+49-468+54 Lt
473+43-474+48 Lt

Item 606.79 Guardrail 350 Flared Terminal
467+85-468+54 Lt
473+43-473+79 Lt

Location 5 Oxford R.L.M. 40.23

The following guardrail locations are stationed from the intersection of Rte. 26 & Wal-Mart entrance = 0+000

Item 204.41 Rehab existing shoulder, Plan Quantity
43+14-45+57 Rt 6 Foot width +/- to 20' rt.

Item 403.208 H.M.A. 12.5mm 1.5 inches of depth
Pave rehabbed shoulder
Pave 350 widening per Standard Detail

Item 606.23 Guardrail Type 3C - Single Rail
43+27-44+52 Rt Face of rail @ 18' rt.

Item 606.231 Guardrail Type 3C - 4.5m Radius and less
43+14-43+21 Rt

Item 606.232 Guardrail Type 3C-Over 4.5m radius
43+21-43+27 Rt

Item 606.265 Terminal End - Single Rail
43+27 Rt

Item 606.35 Guardrail Delineator Post
43+27, 44+52 Rt

Guardrail Remove & Dispose
Individual post's - Incidental

Item 606.754 Widen shoulder for Guardrail 350 Flared Terminal
44+52-45+57 Rt

Item 606.79 Guardrail 350 Flared Terminal
44+52-44+88 Rt

GENERAL NOTES

1. All waste material not used on the project shall be disposed of off the project in waste areas approved by the Resident

2. Any damage to the slopes caused by the Contractor's equipment, personnel, or operation shall be repaired to the satisfaction of the Resident. All work, equipment and materials required to make repairs shall be at the Contractor's expense.

3. All wood post on 350 terminal end installation shall be cut so that no more than one inch is exposed above the beam.

4. Two guardrail delineator posts will be installed at the leading end and the trailing end of each run of guardrail.

5. 350 Flared Terminals shall be installed concurrently with the placement of each section of beam guardrail.

6. Holes created by Guardrail removal will be filled and compacted with approved materials as directed by the Resident. Payment will considered incidental to the guardrail items.

7. Reflectorized silver white beam guardrail delineators shall be mounted on all new, modified, removed modified and reset, or removed and reset guardrail. Delineators shall be installed on every tenth post in a tangent and every fifth post on curves. Reflectorized beam guardrail delineators shall meet the requirements of section 719.01. The delineators shall be mounted on the guardrail beam at the posts. Beam guardrail delineators will not be paid for directly, but will be considered incidental to the guardrail items.

8. No separate payment for Superintendent or Foreman will be made for the supervision of equipment being paid under appropriate rental items.

9. All grading needed to insure proper drainage in Guardrail Section will be incidental.

10. "Undetermined Locations", as stated in the Construction Notes, shall be determined by the Resident.

11. Stations referenced in the Construction Notes are approximate.

12. All work shall be done in accordance with the Maine Department of Transportation's Best Management Practices for Erosion Control & Sediment Control, January, 2000.

13. Any material and work needed to maintain a 4:1 inslope at all 350 Flared widenings shall be considered incidental to Item # 606.754 Widen Shoulder for Guardrail 350 Flared Terminal.

14. Unused Guardrail will become the property of the contractor

15. Paving of 350 widenings to be paid under Item 403.208

General Decision Number ME030009 06/13/2003 ME9

Superseded General Decision No. ME020009

State: Maine

Construction Type:
HIGHWAY

County(ies):

AROOSTOOK	KNOX	SAGADAHOC
FRANKLIN	LINCOLN	SOMERSET
HANCOCK	OXFORD	WALDO
KENNEBEC	PISCATAQUIS	YORK

HIGHWAY CONSTRUCTION PROJECTS excluding major bridging (for example: bascule, suspension and spandrel arch bridges; those bridging waters presently navigating or to be navigatable; and those involving marine construction in any degree); tunnels, building structures in rest area projects and railroad construction.

Modification Number	Publication Date
0	06/13/2003

COUNTY(ies):

AROOSTOOK	KNOX	SAGADAHOC
FRANKLIN	LINCOLN	SOMERSET
HANCOCK	OXFORD	WALDO
KENNEBEC	PISCATAQUIS	YORK

ENGI0004V 04/01/2003

	Rates	Fringes
POWER EQUIPMENT OPERATORS:		
Pavers	16.51	6.00
Rollers	16.51	6.00

SUME4024A 10/24/2000

	Rates	Fringes
CARPENTERS	11.60	1.51
IRONWORKERS		
Structural	12.03	1.58
LABORERS		
Drillers	10.00	2.50
Flaggers	6.00	
Guardrail Installers	7.92	
Landscape	7.87	.16
Line Stripper	8.69	.23
Pipelayers	9.21	2.31
Rakers	9.00	1.51
Sign Erectors	10.00	
Unskilled	8.66	1.38
Wheelman	8.50	.43
POWER EQUIPMENT OPERATORS		
Backhoes	11.87	2.05
Bulldozers	12.33	2.88
Cranes	14.06	1.75
Excavators	12.38	2.48
Graders	13.06	3.73

Loaders	11.41	2.87
Mechanics	13.18	2.57
TRUCK DRIVERS		
Dump	9.35	3.10
Tri axle	8.70	1.18
Two axle	8.56	2.19

WELDERS - Receive rate prescribed for craft performing operation to which welding is incidental.

==========

Unlisted classifications needed for work not included within the scope of the classifications listed may be added after award only as provided in the labor standards contract clauses (29 CFR 5.5(a)(1)(ii)).

In the listing above, the "SU" designation means that rates listed under that identifier do not reflect collectively bargained wage and fringe benefit rates. Other designations indicate unions whose rates have been determined to be prevailing.

WAGE DETERMINATION APPEALS PROCESS

1.) Has there been an initial decision in the matter? This can be:

* an existing published wage determination
* a survey underlying a wage determination
* a Wage and Hour Division letter setting forth a position on a wage determination matter
* a conformance (additional classification and rate) ruling

On survey related matters, initial contact, including requests for summaries of surveys, should be with the Wage and Hour Regional Office for the area in which the survey was conducted because those Regional Offices have responsibility for the Davis-Bacon survey program. If the response from this initial contact is not satisfactory, then the process described in 2.) and 3.) should be followed.

With regard to any other matter not yet ripe for the formal process described here, initial contact should be with the Branch of Construction Wage Determinations. Write to:

Branch of Construction Wage Determinations
Wage and Hour Division
U. S. Department of Labor
200 Constitution Avenue, N. W.
Washington, D. C. 20210

2.) If the answer to the question in 1.) is yes, then an interested party (those affected by the action) can request review and reconsideration from the Wage and Hour Administrator (See 29 CFR Part 1.8 and 29 CFR Part 7). Write to:

Wage and Hour Administrator
U.S. Department of Labor
200 Constitution Avenue, N. W.
Washington, D. C. 20210

The request should be accompanied by a full statement of the

interested party's position and by any information (wage payment data, project description, area practice material, etc.) that the requestor considers relevant to the issue.

3.) If the decision of the Administrator is not favorable, an interested party may appeal directly to the Administrative Review Board (formerly the Wage Appeals Board). Write to:

Administrative Review Board
U. S. Department of Labor
200 Constitution Avenue, N. W.
Washington, D. C. 20210

4.) All decisions by the Administrative Review Board are final.

END OF GENERAL DECISION

Project No. NH-1144(400)E

SPECIAL PROVISION
CONSTRUCTION AREA

A Construction Area located in the **Town of Woodstock** has been established by the Maine Department of Transportation in accordance with provisions of Title 29, Section 1703, Maine Revised Statutes Annotated.

The section of highway under construction in Oxford County, project NH-1144(400)E is located on Route 26, beginning 1.91 miles northerly of the West Paris town line and extending northerly 2.68 miles.

The State Department of Transportation or the State's Engineer may issue permits for stated periods of time for moving construction equipment without loads, low-bed trailers with overloads, over-height, over-width or over-length equipment or materials over all State maintained sections described in the "Construction Area" above and in addition may issue permits for stated periods of time for moving overweight vehicles and loads over the section described in (a) above. The right to revoke such a permit at any time is reserved by the State Department of Transportation and the issuance of such permits shall be subject to any Special Provisions or Supplemental Specifications written for this project.

A Temporary Permit for each move may be issued by the State Department of Transportation or the State's Engineer for moving Contractor's construction equipment used on the project which exceeds the legal limits (shovels, bulldozers, etc.) to sources of construction material over highways maintained by the State reasonably within the area of the project.

The Municipal Officers for the **Town of Woodstock** agreed that a permit will be issued to the Contractor for the purpose of hauling loads in excess of the limits as specified in Title 29, Maine Revised Statues Annotated, on the town ways as described in the "Construction Area" and that single move permits will be issued for moving Contractor's construction equipment used on the project which exceeds the legal limits (shovels, bulldozers, etc.) to sources of construction material over town ways reasonably within the area of the project.

In the event it is necessary to transport gravel, borrow, or other construction material in legally registered vehicles carrying legal loads over town ways, a Contractor's Bond of not more than Nine Thousand ($9,000.00) per kilometer of traveled length may be required by the town, the exact amount of said bond to be determined prior to use of any town way.

The maximum speed limits for trucks on any town way will be forty (40) km per hour [25 mph], unless a higher legal limit is specifically agreed upon in writing by the Municipal Officers concerned.

NH-1144(400)E

END PROJECT STA. 197+60

BEGIN PROJECT STA. 56+00

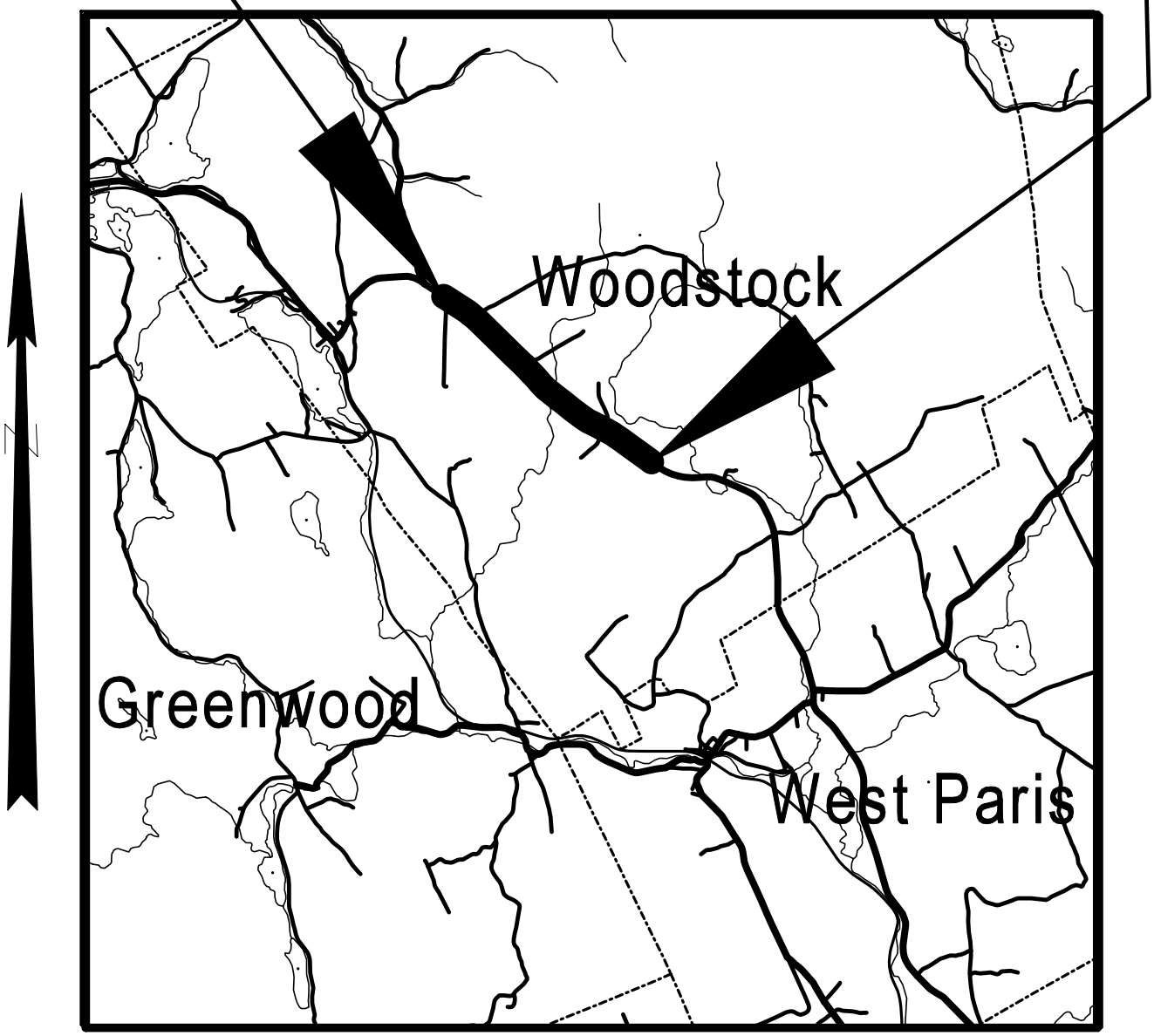

LOCATION MAP

Scale in Miles

Project No. STP-1209(100)X

SPECIAL PROVISION
CONSTRUCTION AREA

A Construction Area located in the **Towns of Bethel, Woodstock and Oxford** has been established by the Maine Department of Transportation in accordance with provisions of Title 29, Section 1703, Maine Revised Statutes Annotated.

The section of highway under construction in Oxford County, Project No.: STP-1209(100)X is located on Route 26, beginning 4.23 miles north of the Greenwood/Bethel town line and extending southerly to a point 2.52 miles south of the Oxford/Norway town line.

The State Department of Transportation or the State's Engineer may issue permits for stated periods of time for moving construction equipment without loads, low-bed trailers with overloads, over-height, over-width or over-length equipment or materials over all State maintained sections described in the "Construction Area" above and in addition may issue permits for stated periods of time for moving overweight vehicles and loads over the section described in (a) above. The right to revoke such a permit at any time is reserved by the State Department of Transportation and the issuance of such permits shall be subject to any Special Provisions or Supplemental Specifications written for this project.

A Temporary Permit for each move may be issued by the State Department of Transportation or the State's Engineer for moving Contractor's construction equipment used on the project which exceeds the legal limits (shovels, bulldozers, etc.) to sources of construction material over highways maintained by the State reasonably within the area of the project.

The Municipal Officers for the **Towns of Bethel, Woodstock and Oxford** agreed that a permit will be issued to the Contractor for the purpose of hauling loads in excess of the limits as specified in Title 29, Maine Revised Statues Annotated, on the town ways as described in the "Construction Area" and that single move permits will be issued for moving Contractor's construction equipment used on the project which exceeds the legal limits (shovels, bulldozers, etc.) to sources of construction material over town ways reasonably within the area of the project.

In the event it is necessary to transport gravel, borrow, or other construction material in legally registered vehicles carrying legal loads over town ways, a Contractor's Bond of not more than Nine Thousand ($9,000.00) per kilometer of traveled length may be required by the town, the exact amount of said bond to be determined prior to use of any town way.

The maximum speed limits for trucks on any town way will be forty (40) km per hour [25 mph], unless a higher legal limit is specifically agreed upon in writing by the Municipal Officers concerned.

STP-1209(100)X

END PROJECT STP-1209(100)X

BEGIN PROJECT STP-1209(100)X

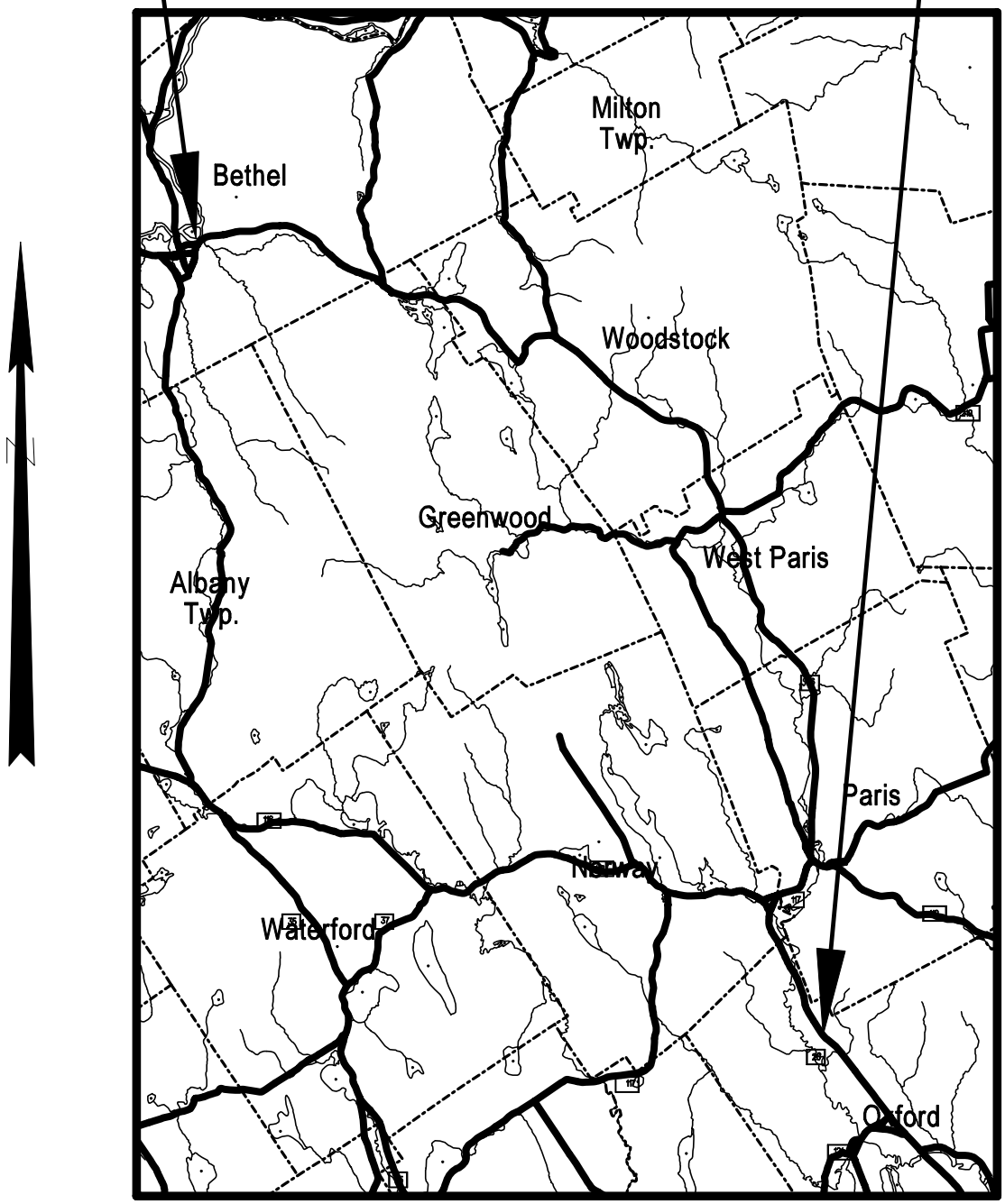

LOCATION MAP

1 0 1 2

Scale in Miles

February 7, 1996
Supersedes
May 8, 1995

SPECIAL PROVISION
CONSTRUCTION AREA

Title 29A, M.R.S.A., Subsection 2383. Overlimit movement permits

1. Overlimit movement permits issued by State. The Secretary of State, acting under guidelines and advice of the Commissioner of Transportation, may grant permits to move non-divisible objects having a length, width, height or weight greater than specified in this Title over a way or bridge maintained by the Department of Transportation.

2. Permit Fee. The Secretary of State, with the advice of the Commissioner of Transportation, may set the fee for these permits, at not less than $3, nor more than $15, based on weight, height, length and width.

3. County and municipal permits. A permit may be granted, for a reasonable fee, by county commissioners or municipal officers for travel over a way or bridge maintained by that county or municipality.

4. Permits for weight. A vehicle granted a permit for excess weight must first be registered for the maximum gross vehicle weight allowed for that vehicle.

5. Special mobile equipment. The Secretary of State may grant a permit, for no more than one year, to move pneumatic-tire equipment under its own power, including Class A and Class B special mobile equipment, over ways and bridges maintained by the Department of Transportation. The fee for that permit is $15 for each 30-day period.

6. Scope of permit. A permit is limited to the particular vehicle or object to be moved and particular ways and bridges.

7. Construction permits. A permit for a stated period of time may be issued for loads and equipment employed on public way construction projects, United States Government projects or construction of private ways, when within construction areas established by the Department of Transportation. The Permit:

   A. Must be procured from the municipal officers for a construction area within that municipality;
   B. May require the Contractor to be responsible for damage to ways used in the construction areas and ma provide for:
      (1) Withholding by the agency contraction the work of final payment under contract; or
      (2) The furnishing of a bond by the Contractor to guarantee suitable repair or payment damages.
   C. May be granted by the Department of Transportation or by the state engineer in charge of the construction contract; and
   D. For construction areas, carries no fee and does not come within the scope of this section.

8. Gross vehicle weight permits. The following may grant permits to operate a vehicle having a gross vehicle weight exceeding the prescribed limit:

A. The Secretary of State, with the consent of the Department of Transportation, for state and state aid highways and bridges within city or compact village limits;
B. Municipal officers, for all other ways and bridges within that city and compact village limits; and
C. The county commissioners, for county roads and bridges located in unorganized territory.

9. Pilot vehicles and state police escorts. Pilot vehicles required by a permit must be equipped with warning lights and signs as required by the Secretary of State with the advice of the Department of Transportation.

Warning lights may only be operated and lettering on the signs may only be visible on a pilot vehicle while it is escorting on a public way a vehicle with a permit.

The Secretary of State shall require a State Police escort for a single vehicle or a combination of vehicles of 125 feet or more in length or 16 feet or more in width. The Secretary of State, with the advice of the Commissioner of Transportation, may require vehicles of lesser dimensions to be escorted by the State Police.

The Bureau of State Police shall establish a fee for State Police escorts.

All fees collected must be used to defray the cost of services provided.

With the advice of the Commissioner of Transportation and the Chief of the State Police, the Secretary of State shall establish rules for the operation for the operation of pilot vehicles.

10. Taxes paid. A permit for a mobile home may not be granted unless the applicant provides reasonable assurance that all property taxes, sewage disposal charges and drain and sewer assessments applicable to the mobile home, including those for the current tax year, have been paid or that the mobile home is exempt from those taxes.

1993, c. 683, § S-2, eff. January 1, 1995.

Historical and Statutory Notes

Derivation:

R.S. 1954, c. 22 § 98
Laws 1955, c. 389
Laws 1967, c. 3.
Laws 1971, c. 593, § 22.
Laws 1973, c. 213.
Laws 1975, c. 130, §
Laws 1975, c. 319, § 2 .
Laws 1977, c. 73, § 5.
Laws 1981, c. 413.
Laws 1985, c. 225, § 1
Laws 1987. c. 52.
Laws 1987, 781, § 3.
Laws 1989, c. 866, § B-13.
Laws 1991, c. 388, § 8.
Laws 1993, c. 683, § A-1.
Former 29 M.R.S.A. § 2382.

Cross Reference

Collection by Secretary of State, See 29-A M.R.S.A. § 154.

SPECIAL PROVISION
(Consolidated Special Provisions)

SPECIAL PROVISION SECTION 101
CONTRACT INTERPRETATION

101.2 Definitions - Closeout Documentation

Replace the sentence "A letter stating the amount….. DBE goals." with "DBE Goal Attainment Verification Form"

SPECIAL PROVISION SECTION 102
DELIVERY OF BIDS
(Location and Time)

102.7.1 Location and Time Add the following sentence "As a minimum, the Bidder will submit a Bid Package consisting of the Notice to Contractors, the completed Acknowledgement of Bid Amendments & Submission of Bid Bond Validation Number form, the completed Schedule of Items, 2 copies of the completed Agreement, Offer, & Award form, a Bid Bond or Bid Guarantee, and any other Certifications or Bid Requirements listed in the Bid Book."

SPECIAL PROVISION SECTION 103
AWARD AND CONTRACTING

103.3.1 Notice and Information Gathering

Change the first paragraph to read as follows: "After Bid Opening and as a condition for Award of a Contract, the Department may require an Apparent Successful Bidder to demonstrate to the Department's satisfaction that the Bidder is responsible and qualified to perform the Work."

SPECIAL PROVISION SECTION 105
GENERAL SCOPE OF WORK

105.6.2 Contractor Provided Services

Change the first paragraph by the addition of the following as the second sentence: "The Contractor is also responsible for providing construction centerline, or close reference points, for all Utility Facilities relocations and adjustments as necessary to complete the Work."

SPECIAL PROVISION SECTION 106
QUALITY

106.6 Acceptance Add the following to paragraph 1 of A: "This includes Sections 401 - Hot Mix Asphalt, 402 - Pavement Smoothness, and 502 - Structural Concrete - Method A - Air Content."

Add the following to the beginning of paragraph 3 of A: "For pay factors based on Quality Level Analysis, and"

SPECIAL PROVISION SECTION 107
TIME

107.3.1 General Add the following: "If a Holiday occurs on a Sunday, the following Monday shall be considered a Holiday. Sunday or Holiday work must be approved by the Department, except that the Contractor may work on Martin Luther King Day, President's Day, Patriot's Day, the Friday after Thanksgiving, and Columbus Day without the Department's approval."

SPECIAL PROVISION SECTION 108
PAYMENT

108.4 Payment for Materials Obtained and Stored First paragraph, second sentence, delete the words "…Delivered on or near the Work site at acceptable storage places."

SPECIAL PROVISION SECTION 109
CHANGES

109.1.1 Changes Permitted Add the following to the end of the paragraph: "There will be no adjustment to Contract Time due to an increase or decrease in quantities, compared to those estimated, except as addressed through Contract Modification(s)."

109.1.2 Substantial Changes to Major Items Add the following to the end of the paragraph: "Contract Time adjustments may be made for substantial changes to Major Items when the change affects the Critical Path, as determined by the Department"

109.4.4 Investigation / Adjustment In the third sentence, delete the words "subsections (A) - (E)"

109.7.2 Basis of Payment Replace with the following: "Equitable Adjustments will be established by mutual Agreement for compensable items listed in Section 109.7.3-Compensable Items, based upon Unit or Lump Sum Prices. If Agreement cannot be reached, the Contractor shall accept payment on a Force Account basis as provided in Section 109.7.5 - Force Account Work, as full and complete compensation for all Work relating to the Equitable Adjustment."

109.7.3 Compensable Items Replace with the following: "The Contractor is entitled to compensation for the following items, with respect to agreed upon Unit or Lump Sum Prices:

1. Labor expenses for non-salaried Workers and salaried foremen.

2. Costs for Materials.

3. A markup on the totals of Items 1 and 2 of this subsection 109.7.3 for home office overhead and profit of the Contractor, its Subcontractors and suppliers, and any lower tier Subcontractors or suppliers, with no mark-ups on mark-ups.

4. Cost for Equipment, based on Blue Book Rates or leased rates, as set forth in Section 109.7.5(C), or the Contractor's Actual Costs.

5. Costs for extended job-site overhead.

6. Time.

7. Subcontractor quoted Work, as set forth below in Section 109.7.5 (F)."

109.7.5 Force Account Work

C. Equipment

Paragraph 2, delete sentence 1 which starts; "Equipment leased…."

Paragraph 6, change sentence 2 from "The Contractor may furnish…" to read "If requested by the Department, the Contractor will produce cost data to assist the Department in the establishment of such rental rate, including all records that are relevant to the Actual Costs including rental Receipts, acquisition costs, financing documents, lease Agreements, and maintenance and operational cost records."

Add the following paragraph; "Equipment leased by the Contractor for Force Account Work and actually used on the Project will be paid for at the actual invoice amount plus 10% markup for administrative costs."

Add the following section;

"F. Subcontractor Quoted Work When accomplishing Force Account Work that utilizes Subcontractor quoted Work, the Contractor will be allowed a maximum markup of 5% for profit and overhead."

SPECIAL PROVISION SECTION 401
HOT MIX ASPHALT PAVEMENT

401.18 Quality Control Method A & B Make the following change to paragraph a. QCP Administrator; in the final sentence, change "…certified as a Plant Technician or Paving Inspector…" to "…certified as a Quality Assurance Technologist…"

401.201 Method A Under a. Lot Size, add the following; "Each lot will be divided into a minimum of four sublots for mix properties and five sublots for percent TMD."

SPECIAL PROVISION SECTION 402
PAVEMENT SMOOTHNESS

Add the following: "Projects to have their pavement smoothness analyzed in accordance with this Specification will be so noted in Special Provision 403 - Bituminous Box."

"402.02 Lot Size Lot size for smoothness will be 1000 lane-meters [3000 lane-feet]. A sublot will consist of 20 lane-meters [50 lane-feet]. Partial lots will be included in the previous lot if less than one-half the size of a normal lot. If greater than one-half the normal lot size, it will be tested as a separate lot."

SPECIAL PROVISION SECTION 502
STRUCTURAL CONCRETE

502.0502 Quality Assurance Method A - Rejection by Resident Change the first sentence to read: "For an individual sublot with test results failing to meet the criteria in Table #1, or if the calculated pay factor for Air Content is less than 0.80……"

502.0503 Quality Assurance Method B - Rejection by Resident Change the first sentence to read: "For material represented by a verification test with test results failing to meet the criteria in Table #1, the Department will……"

502.0505 Resolution of Disputed Acceptance Test Results Combine the second and third sentence to read: "Circumstances may arise, however, where the Department may ……"

SPECIAL PROVISION SECTION 504
REINFORCING STEEL

504.18 Plates for Fabricated Members Change the second paragraph, first sentence from: "…ASTM A 898/A 898 M…" to "…ASTM A 898/A 898 M or ASTM A 435/A 435 M as applicable and…"

SPECIAL PROVISION SECTION 535
PRECAST, PRESTRESSED CONCRETE SUPERSTRUCTURE

535.02 Materials Change "Steel Strand for Concrete Reinforcement" to "Steel Strand." Add the following to the beginning of the third paragraph; "Concrete shall be Class P conforming to the requirements in this section. 28 day compressive strength shall be as stated on the plans. Coarse aggregate…."

535.26 Lateral Post-Tensioning Replace the first paragraph; "A final tension…" with "Overstressing strands for setting losses cannot be accomplished for chuck to chuck lengths of 7.6 m [25 ft] and less. In such instances, refer to the Plans for all materials and methods. Otherwise, post-tensioning shall be in accordance with PCI standards and shall provide the anchorage force noted in the Plans. The applied jacking force shall be no less than 100% of the design jacking force."

SPECIAL PROVISION SECTION 604
MANHOLES, INLETS, AND CATCH BASINS

604.02 Materials Add the following:

"Tops and Traps	712.07
Corrugated Metal Units	712.08
Catch Basin and Manhole Steps	712.09"

SPECIAL PROVISION SECTION 615
LOAM

615.02 Materials Make the following change:

Organic Content	Percent by Volume
Humus	"5% - 10%", as determined by Ignition Test

SPECIAL PROVISION SECTION 618
SEEDING

618.01 Description Change the first sentence to read as follows: "This work shall consist of furnishing and applying seed ….." Also remove ",and cellulose fiber mulch" from 618.01(a).

618.03 Rates of Application In 618.03(a), remove the last sentence and replace with the following: "These rates shall apply to Seeding Method 2, 3, and Crown Vetch."

In 618.03(c) "1.8 kg [4 lb]/unit." to "1.95 kg [4 lb]/unit."

618.09 Construction Method In 618.09(a) 1, sentence two, replace "100 mm [4 in]" with "25 mm [1 in] (Method 1 areas) and 50 mm [2 in] (Method 2 areas)"

618.15 Temporary Seeding Change the Pay Unit from Unit to Kg [lb].

SPECIAL PROVISION SECTION 620
GEOTEXTILES

620.03 Placement Section (c)

Title: Replace "Non-woven" in title with "Erosion Control".
First Paragraph: Replace first word "Non-woven" with "Woven monofilament".
Second Paragraph: Replace second word "Non-woven" with "Erosion Control".

620.07 Shipment, Storage, Protection and Repair of Fabric Section (a)

Replace the third sentence with the following: "Damaged geotextiles, as identified by the Resident, shall be repaired immediately."

620.09 Basis of Payment

Pay Item 620.58: Replace "Non-woven" with "Erosion Control"
Pay Item 620.59: Replace "Non-woven" with "Erosion Control"

SPECIAL PROVISION SECTION 626
HIGHWAY SIGNING

626.034 Concrete Foundations Add to the following to the end of the second paragraph: "Pre-cast and cast-in-place foundations shall be warranteed against leaning and corrosion for two years after the project is completed. If the lean is greater than 2 degrees from normal or the foundation is spalling within the first two years, the Contractor shall replace the foundation at no extra cost."

SPECIAL PROVISION SECTION 637
DUST CONTROL

637.06 Basis of Payment Add the following after the second sentence of the third paragraph: "Failure by the Contractor to follow Standard Specification or Special Provision - Section 637 and/or the Contractor's own Soil Erosion and Pollution Control Plan concerning Dust Control and/or the Contractor's own Traffic Control Plan concerning Dust Control and/or visible evidence of excessive dust problems, as determined by the Resident, will result in a reduction in payment, computed by reducing the Lump Sum Total by 5% per occurrence per day. The Department's Resident or any other representative of the Department reserves the right to suspend the work at any time and request a meeting to discuss violations and remedies. The Department shall not be held responsible for any delay in the work due to any suspension under this item. Additional penalties may also be assessed in accordance with Special Provision 652 - Work Zone Traffic Control and Standard Specification 656 - Temporary Soil Erosion and Water Pollution Control."

SPECIAL PROVISION SECTION 652
MAINTENANCE OF TRAFFIC

652.8.2 Other Items Replace the last paragraph with the following: "There will be no payment made under any 652 pay items after the expiration of the adjusted total contract time."

SPECIAL PROVISION SECTION 656
TEMPORARY SOIL EROSION AND WATER POLLUTION CONTROL

656.5.1 If Pay Item 656.75 Provided Replace the second paragraph with the following: "Failure by the Contractor to follow Standard Specification or Special Provision - Section 656 and/or the Contractor's own Soil Erosion and Pollution Control Plan will result in a reduction in payment, computed by reducing the Lump Sum Total by 5% per occurrence per day. The Department's Resident or any other representative of the Department reserves the right to suspend the work at any time and request a meeting to discuss violations and remedies. The Department shall not be held responsible for any delay in the work due to any suspension under this item."

SPECIAL PROVISION SECTION 703
AGGREGATES

703.22 Underdrain Backfill Material Change the first paragraph from "…for Underdrain Type B…" to "…for Underdrain Type B and C…"

SPECIAL PROVISION SECTION 709
REINFORCING STEEL AND WELDED STEEL WIRE FABIC

709.03 Steel Strand Change the second paragraph from "…shall be 12mm [½ inch] AASHTO M203M/M203 (ASTM A416/A416M)…" to "…shall be 15.24 mm [0.600 inch] diameter AASHTO M203 (ASTM A416)…"

SPECIAL PROVISION SECTION 712
MISCELLANEOUS HIGHWAY MATERIALS

Add the following:

"712.07 Tops, and Traps These metal units shall conform to the plan dimensions and to the following specification requirements for the designated materials.

Gray iron castings shall conform to the requirements of AASHTO M105, Class 30, unless otherwise designated.

Carbon steel castings shall conform to the requirements of AASHTO M103/M103M. Grade shall be 450-240 [65-35] unless otherwise designated.

Structural steel shall conform to the requirements of AASHTO M183/M183M or ASTM A283/A283M, Grade B or better. Galvanizing, where specified for these units, shall conform to the requirements of AASHTO M111.

712.08 Corrugated Metal Units The units shall conform to plan dimensions and the metal to AASHTO M36/M36M. Bituminous coating, when specified, shall conform to AASHTO M190 Type A.

712.09 Catch Basin and Manhole Steps Steps for catch basins and for manholes shall conform to ASTM C478M [ASTM C478], Section 13 for either of the following material:

(a) Aluminum steps-ASTM B221M, [ASTM B211] Alloy 6061-T6 or 6005-T5.

(b) Reinforced plastic steps Steel reinforcing bar with injection molded plastic coating copolymer polypropylene. Polypropylene shall conform to ASTM D 4101.

712.23 Flashing Lights Flashing Lights shall be power operated or battery operated as specified.

(a) Power operated flashing lights shall consist of housing, adapters, lamps, sockets, reflectors, lens, hoods and other necessary equipment designed to give clearly visible

signal indications within an angle of at least 45 degrees and from 3 to 90 m [10 to 300 ft] under all light and atmospheric conditions.

Two circuit flasher controllers with a two-circuit filter capable of providing alternate flashing operations at the rate of not less than 50 nor more than 60 flashes per minute shall be provided.

The lamps shall be 650 lumens, 120 volt traffic signal lamps with sockets constructed to properly focus and hold the lamp firmly in position.
The housing shall have a rotatable sun visor not less than 175 mm [7 in] in length designed to shield the lens.

Reflectors shall be of such design that light from a properly focused lamp will reflect the light rays parallel. Reflectors shall have a maximum diameter at the point of contact with the lens of approximately 200 mm [8 in].

The lens shall consist of a round one-piece convex amber material which, when mounted, shall have a visible diameter of approximately 200 mm [8 in]. They shall distribute light and not diffuse it. The distribution of the light shall be asymmetrical in a downward direction. The light distribution of the lens shall not be uniform, but shall consist of a small high intensity portion with narrow distribution for long distance throw and a larger low intensity portion with wide distribution for short distance throw. Lenses shall be marked to indicate the top and bottom of the lens.

(b) Battery operated flashing lights shall be self- illuminated by an electric lamp behind the lens. These lights shall also be externally illuminated by reflex-reflective elements built into the lens to enable it to be seen by reflex-reflection of the light from the headlights of oncoming traffic. The batteries must be entirely enclosed in a case. A locking device must secure the case. The light shall have a flash rate of not less than 50 nor more than 60 flashes per minute from minus 30 °C [minus 20 °F] to plus 65 °C [plus 150 °F]. The light shall have an on time of not less than 10 percent of the flash cycle. The light beam projected upon a surface perpendicular to the axis of the light beam shall produce a lighted rectangular projection whose minimum horizontal dimension shall be 5 degrees each side of the horizontal axis. The effective intensity shall not have an initial value greater than 15.0 candelas or drop below 4.0 candelas during the first 336 hours of continuous flashing. The illuminated lens shall appear to be uniformly bright over its entire illuminated surface when viewed from any point within an angle of 9 degrees each side of the vertical axis and 5 degrees each side of the horizontal axis. The lens shall not be less than 175 mm [7 in] in diameter including a reflex-reflector ring of 13 mm [½ in] minimum width around the periphery. The lens shall be yellow in color and have a minimum relative luminous transmittance of 0.440 with a luminance of 2854° Kelvin. The lens shall be one-piece construction. The lens material shall be plastic and meet the luminous transmission requirements of this specification. The case containing the batteries and

circuitry shall be constructed of a material capable of withstanding abuse equal to or greater than 1.21 mm thick steel [No. 18 U.S. Standard Gage Steel]. The housing and the lens frame, if of metal shall be properly cleaned, degreased and pretreated to promote adhesion. It shall be given one or more coats of enamel which, when dry shall completely obscure the metal. The enamel coating shall be of such quality that when the coated case is struck a light blow with a sharp tool, the paint will not chip or crack and if scratched with a knife will not powder. The case shall be so constructed and closed as to exclude moisture that would affect the proper operation of light. The case shall have a weep hole to allow the escape of moisture from condensation. Photoelectric controls, if provided, shall keep the light operating whenever the ambient light falls below 215 lx [20 foot candles]. Each light shall be plainly marked as to the manufacturer's name and model number.

If required by the Resident, certification as to conformance to these specifications shall be furnished based on results of tests made by an independent testing laboratory. All lights are subject to random inspection and testing. All necessary random samples shall be provided to the Resident upon request without cost to the Department. All such samples shall be returned to the Contractor upon completion of the tests.

712.32 Copper Tubing Copper tubing and fittings shall conform to the requirements of ASTM B88M Type A [ASTM B88, Type K] or better.

712.33 Non-metallic Pipe, Flexible Non-metallic pipe and pipe fittings shall be acceptable flexible pipe manufactured from virgin polyethylene polymer suitable for transmitting liquids intended for human or animal consumption.

712.34 Non-metallic Pipe, Rigid Non-metallic pipe shall be Schedule 40 polyvinylchloride (PVC) that meets the requirement of ASTM D1785. Fittings shall be of the same material.

712.341 Metallic Pipe Metallic pipe shall be ANSI, Standard B36.10, Schedule 40 steel pipe conforming to the requirements of ASTM A53 Types E or S, Grade B. End plates shall be steel conforming to ASTM A36/A36M.

Both the sleeve and end plates shall be hot dip galvanized. Pipe sleeve splices shall be welded splices with full penetration weld before galvanizing.

712.35 Epoxy Resin Epoxy resin for grouting or sealing shall consist of a mineral filled thixotropic, flexible epoxy resin having a pot life of approximately one hour at 10°C [50°F]. The grout shall be an approved product suitable for cementing steel dowels into the preformed holes of curb inlets and adjacent curbing. The sealant shall be an approved product, light gray in color and suitable for coating the surface.

712.36 Bituminous Curb The asphalt cement for bituminous curb shall be of the grade required for the wearing course, or shall be Viscosity Grade AC-20 meeting the current requirements of Subsection 702.01 Asphalt Cement. The aggregate shall conform to the requirements of Subsection 703.07. The coarse aggregate portion retained on the 2.36 mm [No. 8] sieve may be either crushed rock or crushed gravel.

The mineral constituents of the bituminous mixture shall be sized and graded and combined in a composite blend that will produce a stable durable curbing with an acceptable texture.
Bituminous material for curb shall meet the requirements of Section 403 - Hot Bituminous Pavement.

712.37 Precast Concrete Slab Portland cement concrete for precast slabs shall meet the requirements of Section 502 - Structural Concrete, Class A.

The slabs shall be precast to the dimension shown on the plans and cross section and in accordance with the Standard Detail plans for Concrete Sidewalk Slab. The surface shall be finished with a float finish in accordance with Subsection 502.14(c). Lift devices of sufficient strength to hold the slab while suspended from cables shall be cast into the top or back of the slab.

712.38 Stone Slab Stone slabs shall be of granite from an acceptable source, hard, durable, predominantly gray in color, free from seams which impair the structural integrity and be of smooth splitting character. Natural color variations characteristic of the deposit will be permitted. Exposed surfaces shall be free from drill holes or indications of drill holes. The granite slabs in any one section of backslope must be all the same finish.

The granite slabs shall be scabble dressed or sawed to an approximately true plane having no projections or depressions over 13 mm [½ in] under a 600 mm [2 ft] straightedge or over 25 mm [1 in] under a 1200 mm [4 ft] straightedge. The arris at the intersection of the top surface and exposed front face shall be pitched so that the arris line is uniform throughout the length of the installed slabs. The sides shall be square to the exposed face unless the slabs are to be set on a radius or other special condition which requires that the joints be cut to fit, but in any case shall be so finished that when the stones are placed side by side no space more than 20 mm [3/4 in] shall show in the joint for the full exposed height.

Liftpin holes in all sides will be allowed except on the exposed face.

SPECIAL PROVISION SECTION 717
ROADSIDE IMPROVEMENT MATERIAL

717.05 Mulch Binder. Change the third sentence to read as follows:

"Paper fiber mulch may be used as a binder at the rate of 2.3 kg/unit [5 lb/unit]."

Town: **Woodstock, Rt. 26**
Projects: **NH-1144(400)E, PIN 11444.00**
Date: **January 5, 2004**

SPECIAL PROVISIONS
SECTION 104
Utilities

MEETING

A Pre-construction Utility Conference, as defined in Subsection 104.4.6 of the Standard Specifications **is not** required.

GENERAL INFORMATION

These Special Provisions outline the arrangements that have been made by the Department for utility and/or railroad work to be undertaken in conjunction with this project. The following list identifies all known utilities or railroads having facilities presently located within the limits of this project or intending to install facilities during project construction
.

Overview:

Utility/Railroad	Aerial	Underground
Central Maine Power Company	X	
Adelphia Communications Corp.	X	
Oxford Telephone	X	X

Temporary utility adjustments are **not** anticipated. If temporary relocation becomes necessary, sufficient time will need to be allowed prior to the construction for all required temporary relocation.

All utility crossings over highways will provide not less than 18 feet vertical clearance over existing ground in cut or over finished grade in fill, during construction of this project.

Any times and dates mentioned are estimates only and are dependent upon favorable weather, working conditions, and freedom from emergencies. The Contractor shall have no claim against the Department if they are exceeded.

AERIAL

No Aerial Utility adjustments are anticipated as part of this project. All above ground utility locations (hydrants, poles, guys, etc.) will be reviewed for compliance with the Department's Above Ground Pole Policy following the completion of the paving operation. Any above ground utility locations not meeting the Department's Above Ground Pole Policy will require relocation to the proper offset.

SUBSURFACE

Oxford Telephone Company has buried cable within the project limits. Contractor shall notify the telephone company at least three (3) days prior to any guardrail relocation or ditching operations to allow the utility to determine the cable locations in that area. The contact for **Oxford Telephone Company** is **Brent Hadley 462-2754.** After the initial layout, it is the

Contractor's responsibility to maintain the location markings. Any damage to the buried cable caused by the Contractor during construction shall be repaired by the utility at the contractor's expense.

UTILITY SIGNING

Any utility working within the construction limits of this project shall ensure that the traveling public is adequately protected at all times. All work areas shall be signed, lighted, and traffic flaggers employed as determined by field conditions. All traffic controls shall be in accordance with the latest edition of the Manual on Uniform Traffic Control Devices for Streets and Highways, as issued by the Federal Highway Administration.

SAFE PRACTICES AROUND UTILITY FACILITIES

The Contractor shall be responsible for complying with M.R.S.A. Title 35-A, Chapter 7-A Sections 751 - 761 Overhead High-Voltage Line Safety Act. Prior to commencing any work that may come within ten (10) feet of any aerial electrical line; the Contractor shall notify the aerial utilities as per Section 757 of the above act.

DIG SAFE

The Contractor shall be responsible for determining the presence of underground utility facilities prior to commencing any excavation work and shall notify utilities of proposed excavation in accordance with M.R.S.A. Title 23 §3360-A, Maine "Dig Safe" System.

MAINTAINING UTILITY LOCATION MARKINGS

The Contractor will be responsible for maintaining the buried utility location markings following the initial locating by the appropriate utility or their designated representative.

THE CONTRACTOR SHALL PLAN AND CONDUCT HIS WORK ACCORDINGLY.

The following utilities are known to be located on this project:

Central Maine Power Company	Dennis Chadbourne	828-2860
Adelphia Communications Corp.	Steve Bossie	1-877-500-1055 (ext.2421)
	Walter Leighton (Location)	369-0124
Oxford Telephone Company	Brent Hadley	462-2754
	Brad Wight (Location)	462-2135

Town:Woodstock
PIN #: 11444.00
Date: 1/15/04

SPECIAL PROVISION
SECTION 105
General Scope of Work
(Environmental Requirements)

Instream Work shall not be allowed between the dates of 10/2 and 7/14.
(Instream work is allowed from 7/15 to 10/1.)

Stream Name(s) with Station #s: 3 Unnamed tributaries to Black Brook and Black Brook
Special Conditions: Instream work shall be conducted during low flows.

Instream work consists of any activity conducted below the normal high water mark.

During the instream work window restriction, all activities are prohibited (including placement and removal of cofferdams) below the normal high water mark and during high flow conditions, except for the following:

- Work within a sealed and dewatered cofferdam. Maintenance pumping within a sealed cofferdam is also allowed.

No construction activity, whether temporary or permanent, is allowed that completely blocks a river, stream, or brook without providing downstream flow.

The contractor shall abide by all permits and conditions.

SPECIAL PROVISION
SECTION 105
GENERAL SCOPE OF WORK
(LIMITATIONS OF OPERATIONS)

1) **The contractor will be limited to one paving operation, excluding hand work, unless otherwise approved by the Resident.**

2) **The contractor shall clean all culverts as directed by the Resident in the first two (2) weeks of operation so that there condition may be assessed. Payment to be made under Item 631.32 Culvert Cleaner (inc. Operator).**

SPECIAL PROVISION
SECTION 107
SCHEDULING OF WORK

Replace Section 107.4.2 with the following:

"107.4.2 Schedule of Work Required Within 21 Days of Contract Execution and before beginning any on-site activities, the Contractor shall provide the Department with its Schedule of Work. The Contractor shall plan the Work, including the activity of Subcontractors, vendors, and suppliers, such that all Work will be performed in Substantial Conformity with its Schedule of Work. The Schedule must include sufficient time for the Department to perform its functions as indicated in this Contract, including QA inspection and testing, approval of the Contractor's TCP, SEWPCP and QCP, and review of Working Drawings.

At a minimum, the Schedule of Work shall include a bar chart which shows the major Work activities, milestones, durations, and a timeline. Milestones to be included in the schedule include: (A) start of Work, (B) beginning and ending of planned Work suspensions, (C) Completion of Physical Work, and (D) Completion. If the Contractor Plans to Complete the Work before the specified Completion date, the Schedule shall so indicate.

Any restrictions that affect the Schedule of Work such as paving restrictions or In-Stream Work windows must be charted with the related activities to demonstrate that the Schedule of Work complies with the Contract.

The Department will review the Schedule of Work and provide comments to the Contractor within 20 days of receipt of the schedule. The Contractor will make the requested changes to the schedule and issue the finalized version to the Department."

SPECIAL PROVISION
SECTION 107
TIME
(CONTRACT TIME)

1. **The contractor will be allowed to commence work anytime after August 1, 2004, as long as all plans that are required under this contract have been submitted and approved.**

2. **For every weekday not worked once operations commence, (excluding inclement weather days) the contractor will be charged Supplemental Liquidated Damages at the rate of $750.00 per day.**

3. **The completion date for this contract is October 16, 2004.**

Woodstock
NH-1144(400)X
Route 26
January 15, 2004

SPECIAL PROVISION
SECTION 403
HOT MIX ASPHALT

Desc. of Course	Grad. Design	Item Number	Bit Cont. % of Mix	Total Thick	No. Of Layers	Comp. Notes
			Mainline Travelway			
Wearing	9.5mm	403.210	N/A	1 ¼"	1	4,7
Shim	9.5mm	403.211	N/A	variable	1/more	2,4,7,10
			Rehabilitate Shoulder Areas			
Wearing	9.5mm	403.210	N/A	1 ½ "	1	4,7
			Drives, Misc.			
Wearing	9.5mm	403.209	N/A	1 - 2"	1/more	2,3,9,10,13

COMPLEMENTARY NOTES

2. The density requirements are waived.
3. The design traffic level for mix placed shall be <0.3 million ESALS.
4. The design traffic level for mix placed shall be 0.3 to <3 million ESALS.
7. Section 106.6 Acceptance, (1) Method A.
9. Section 106.6 Acceptance, (2) Method C, as per Special Provision 401.
10. A **"FINE"** 9.5mm mix, defined as a gradation above or through the restricted zone, shall be used for this item.
12. A mixture meeting the gradation of 9.5mm hot mix asphalt may be used at the option of the contractor.
13. A mixture meeting the requirements of section 703.09 Grading 'D', with a minimum PGAB content of 6%, and the limits of Specification 401, Table 7 (Drives and Sidewalks) for PGAB content and gradation may be substituted for this item. A job mix formula shall be submitted to the department for approval.

Tack Coat

A tack coat of emulsified asphalt, RS-1 or HFMS-1, Item 409.15 shall be applied to any existing pavement at a rate of approximately 0.025 gal/yd², and on milled pavement approximately 0.05 gal/yd², prior to placing a new course. A fog coat of emulsified asphalt shall be applied between shim / intermediate course and the surface course, at a rate not to exceed 0.025 gal/yd². Tack used between layers of pavement will be paid for at the contract unit price for Item 409.15 Bituminous Tack Coat.

SPECIAL PROVISION
SECTION 403
HOT MIX ASPHALT OVERLAY

Desc. of Course	Grad. Design	Item Number	Bit Cont. % of Mix	Total Thick	No. Of Layers	Comp. Notes
			Rehabilitate Shoulder Areas Guardrail, M.E.L.T. Widenings			
Wearing	12.5mm	403.208	N/A	1.5 ”	1	4,9,12

COMPLEMENTARY NOTES

4. The design traffic level for mix placed shall be 0.3 to <3 million ESALS. The design, verification, Quality Control, and Acceptance tests for this mix will be performed at **50 gyrations.**
9. Section 106.6 Acceptance, (2) Method C. One mix sample per mix source, per mix type, shall be taken and evaluated for mix quality as per Section 401.
12. A mixture meeting the gradation of 9.5 mm hot mix asphalt may be used at the option of the contractor.

Tack Coat

A tack coat of emulsified asphalt, RS-1 or HFMS-1, Item #409.15 shall be applied to any existing pavement at a rate of approximately 0.08 L/m², and on milled pavement approximately 0.2 L/m², prior to placing a new course. A fog coat of emulsified asphalt shall be applied between shim / intermediate course and the surface course, at a rate not to exceed 0.08 L/m².

Tack used between layers of pavement will be paid for at the contract unit price for Item 409.15 Bituminous Tack Coat.

December 30, 2003

SPECIAL PROVISION
SECTION 603
HEADWALL
(Remove and Dispose)

This Section of the Standard Specifications is amended by the addition of the following:

Description This work shall consist of the removing and disposing of existing headwalls, as indicated in the contract.

CONSTRUCTION REQUIREMENTS

General The existing headwall shall be removed and shall become the property of the Contractor to be disposed of off the project.

Method of Measurement Headwall, Remove and Dispose, will be measured by each.

Basis of Payment The quantity of Headwall, Remove and Dispose, will be paid for at the contract unit price per each.

Payment will made under:

Pay Item	Pay Unit
603.748 Headwall, Remove and Dispose	Each

February 27, 2003
Supersedes December 10, 2002

SPECIAL PROVISION
SECTION 652
MAINTENANCE OF TRAFFIC

Approaches Approach signing shall include the following signs as a minimum. Field conditions may warrant the use of additional signs as determined by the Resident.

Road Work Next x Miles
Road Work 500 Feet
End Road Work

Work Area At each work site, signs and channelizing devices shall be used as directed by the Resident. Signs include:

Road Work xxxx[1]
One Lane Road Ahead
Flagger Sign

Other typical signs include:

Be Prepared to Stop
Low Shoulder
Bump
Pavement Ends

The above lists of Approach signs and Work Area signs are representative of the contract requirements. Other sign legends may be required.

The Contractor shall conduct their operations in such a manner that the roadway will not be restricted to one lane for more than 800 m [2,500 ft] at each work area. Where more than one work area restricts traffic to one lane operation, these work areas shall be separated by at least 1.6 km [1 mile] of two way operation.

Temporary Centerline A temporary centerline shall be placed each day on all new pavement to be used by traffic. The temporary centerline, when specified of reflectorized traffic paint, shall conform to the standard marking patterns used for permanent markings.

Failure to apply a temporary centerline daily will result in suspension of paving until temporary markers are applied to all previously placed pavement.

[1] "Road Work Ahead" to be used in mobile operations and "Road Work xx ft" to be used in stationary operations as directed by the Resident.

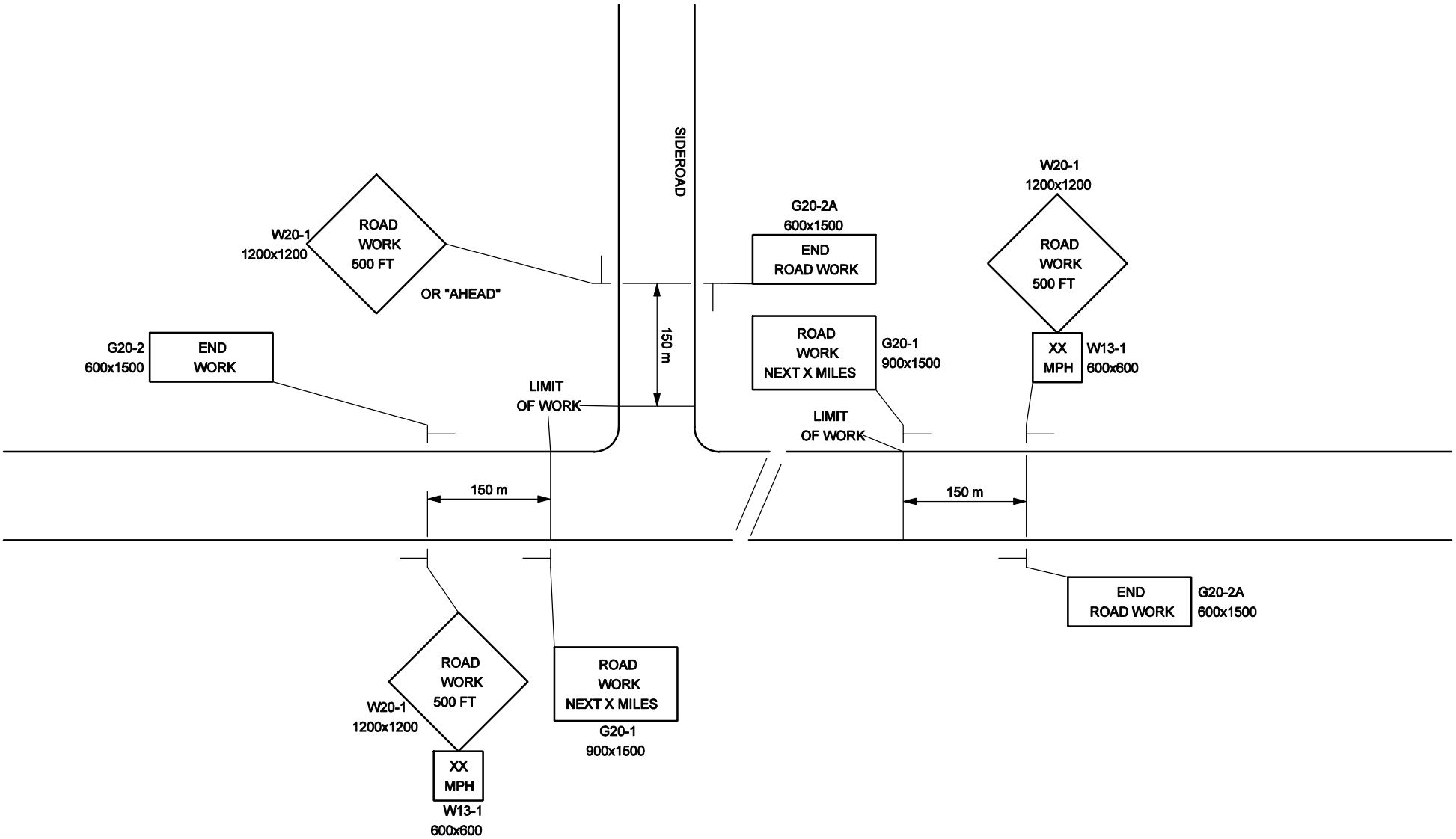

TYPICAL
-- PROJECT APPROACH SIGNING --
TWO WAY TRAFFIC

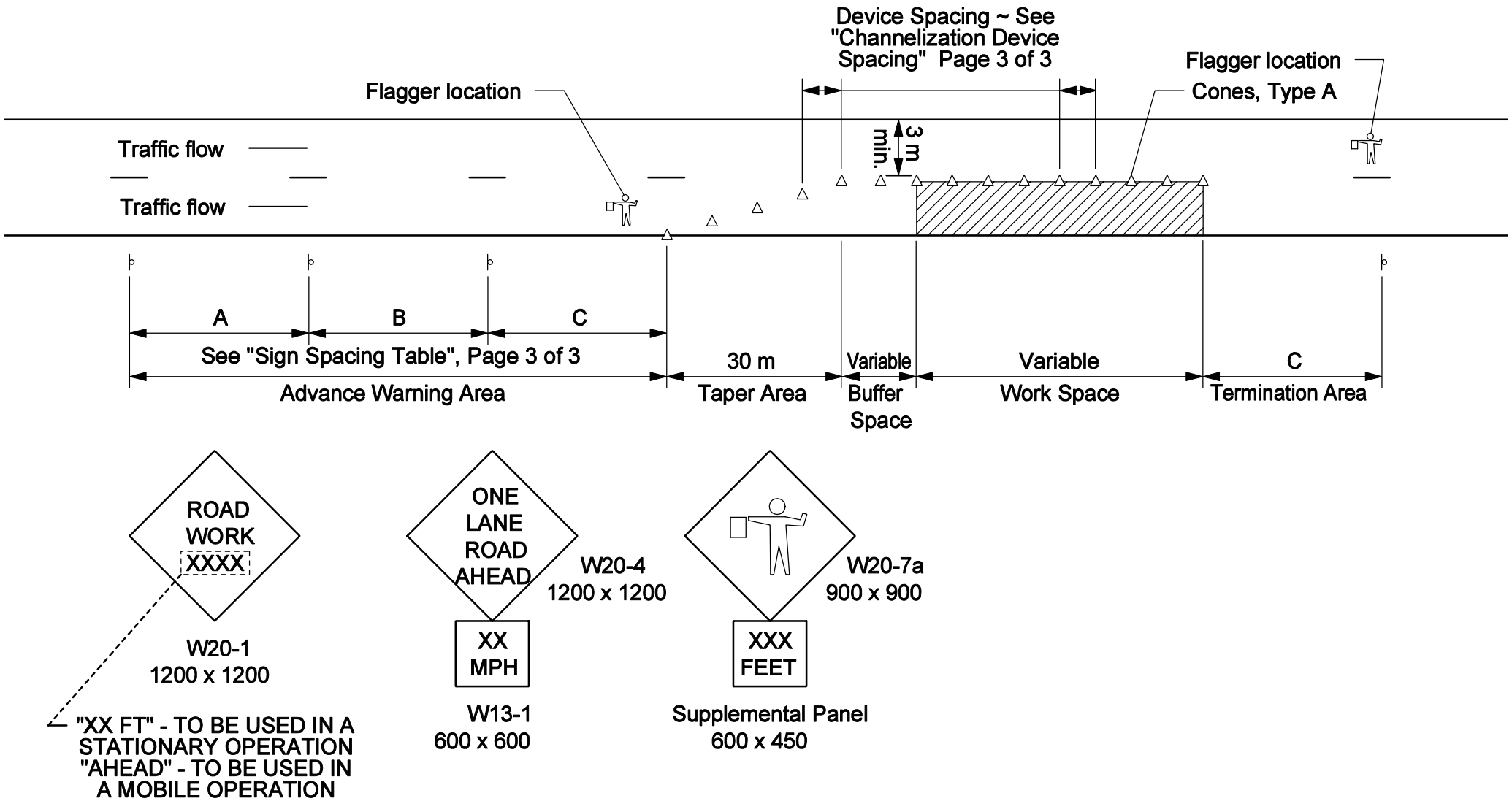

TYPICAL APPLICATION: TWO - WAY, TWO LANE ROADWAY, CLOSING ONE LANE USING FLAGGERS

TYPE OF TAPER	TAPER LENGTH (L)*
Merging Taper	at least L
Shifting Taper	at least 0.5L
Shoulder Taper	at least 0.33L
One-Lane, Two-Way Traffic Taper	100 ft (30 m) maximum
Downstream Taper	100 ft (30 m) per lane

* Formulas for L are as follows:

For speed limits of 40 mph (60 km/h) or less:

$L = \frac{WS^2}{60}$ $\quad (L = \frac{WS^2}{155})$

For speed limits of 45 mph (70 km/h) or greater:

$L = WS$ $\quad (L = \frac{WS}{1.6})$

* Formulas for L are as follows:

A minimum of 5 channelization devices shall be used in the taper.

CHANNELIZATION DEVICE SPACING

The spacing of channelization devices shall not exceed a distance equal to 1.0 times the speed limit in mph when used for taper channelization, and a distance in feet of 2.0 times the speed limit in mph when used for tangent channelization.

SIGN SPACING TABLE			
Road Type	Distance Between Signs**		
	A	B	C
Urban 30 mph (50 km/h) or less	100 (30)	100 (30)	100 (30)
Urban 35 mph (55 km/h) and greater	350 (100)	350 (100)	350 (100)
Rural	500 (150)	500 (150)	500 (150)
Expressway / Urban Parkway	2,640 (800)	1,500 (450)	1000 (300)

**Distances are shown in feet (meters).

GENERAL NOTES;

1. Final placement of signs and devices may be changed to fit field conditions as approved by the Resident.

SUGGESTED BUFFER ZONE LENGTHS

Speed (mph)	Length (feet)	Speed (mph)	Length (feet)
20	115	40	325
25	155	45	360
30	200	50	425
35	250	55	495

SPECIAL PROVISION
SECTION 656
Temporary Soil Erosion and Water Pollution Control

The following is added to Section 656 regarding Project Specific Information and Requirements. All references to the Maine Department of Transportation Best Management Practices for Erosion and Sediment Control (a.k.a. Best Management Practices manual or BMP Manual) are a reference to the latest revision of said manual. The "Table of Contents" of the latest version is dated "1/19/00" (available at http://www.state.me.us/mdot/mainhtml/bmp/bmpjan2000.pdf.) **Procedures specified shall be according to the BMP Manual unless stated otherwise.**

Delete the last sentence of Section 656.4.4, which reads, "After Final Acceptance of the project, the Contractor must submit the log to the Department which will become the property of the Department."

Any and all references to "bark mulch" or "composted bark mix" shall be a reference to "Erosion Control Mix" in accordance with *Standard Specification, Section 619 - Mulch.*

Project Specific Information and Requirements

The following information and requirements apply specifically to this Project. The temporary soil erosion and water pollution control measures associated with this work shall be addressed in the SEWPCP.

This project is in the **Black Brook** watershed, which is listed as a **CLASS A** and is considered **SENSITIVE** in accordance with the BMP Manual. The Contractor's SEWPCP shall comply with Section II.B., Guidelines for Sensitive Waterbodies in the BMP Manual.

1. Newly disturbed earth shall be mulched by the end of each workday. Mulch shall be maintained on a daily basis.

2. The SEWPCP shall describe the location and method of temporary erosion and sediment control for existing and proposed catch basins, outlet areas and culvert inlets and outlets.

3. Dust control items other than those under Standard Specification 637 and Special Provision 637, if applicable, shall be included in the plan.

4. Permanent slope stabilization measures shall be applied within one week of the last soil disturbance.

5. Permanent seeding shall be done in accordance with *Special Provision, Section 618, Seeding* unless the Contract states otherwise.

6. Culvert inlet and outlet protection shall be installed within 48 hours of culvert installation, or prior to a storm event, whichever is sooner.

7. All disturbed ditches shall be stabilized by the end of each workday. Stabilization shall be maintained on a daily basis.

SPECIAL PROVISION
SECTION 656
Temporary Soil Erosion and Water Pollution Control

8. Erosion control blanket shall be installed in the bottoms of all ditches except where a stone lining is planned. Seed shall be applied prior to the placement of the blanket.

9. If check dams are used, they shall be constructed of stone in accordance with BMP Manual, Section 9.

10. Stream flow shall be maintained at all times.

11. The Contractor's SEWPCP shall address in-stream work in accordance with *Special Provision 105-Environmental Requirements* at the following locations:

sta. 87+67	sta. 158+18
sta. 122+09	sta. 163+85

12. A cofferdam sedimentation basin is required if cofferdams are used. The basin shall be located in an upland area where the water can settle and seep into the ground or be released slowly to the resource in a manner that will not cause erosion. The location of such a cofferdam sedimentation basin shall be addressed in the SEWPCP.

Permits & Cultural Resources Unit

PIN #: 11444.00
Location: Woodstock
Permit Member: Laurie Rowe Photographs ☐ Database/Projex ☒ Package to ENV Coordinator: 1/15/04

☒ **HISTORIC AND CULTURAL RESOURCES**

MHPC Historic Resources	N/A ☐	Applicable☒	Approved ☒	MOA ☐
MHPC Archeological Resources	N/A ☐	Applicable☒	Approved ☒	MOA ☐
Tribal Consultation	N/A ☒	Applicable☐	Approved ☐	

☒ **4(f) and 6(f)**

Section 4(f)	N/A ☒	Applicable☐	Approved ☐
LAWCON 6(f)	N/A ☒	Applicable☐	Approved ☐

☒ **FEMA** N/A ☒ Applicable☐ Approved ☐

☒ **Maine Department of Environmental Protection (MDEP) Site Location of Development**
N/A ☒ Applicable ☐ Approved ☐

☒ **Local Zoning, Title 30-A, Section 4352-6**.
Is the project something other than the highway and bridge system, such as a maintenance lot, building/parking facility? Yes ☐ No ☒. If no, the project is exempt.
If yes, continue. Does the town in which the project is located have a comprehensive plan consistent with the Growth Management Program? Yes ☐ No ☐. If no, the project is exempt.
If yes, local zoning ordinances and/or permits are needed. Approved ☐

☒ **Maine Department of Inland Fisheries and Wildlife (MDIFW) Essential Habitat**

Eagle Nest	N/A ☒	Applicable ☐	Approved ☐
Piping Plover	N/A ☒	Applicable ☐	Approved ☐
Roseate Tern	N/A ☒	Applicable☐	Approved ☐

☒ **United States Fish and Wildlife Service (USFWS), Migratory Bird Act**
N/A ☒ Applicable ☐

☒ **Maine Department of Conservation/ Public Lands, Submerged Land Lease**
N/A ☒ Applicable ☐

☒ **Land Use Regulation Commission (LURC)** ☒ Not Applicable

No permit	☐	
Notice	☐	Approved ☐
Permit	☐	Approved ☐

☒ **Maine Department of Environmental Protection (MDEP), Natural Resource Protection Act**

No permit required	☐	
Exempt	☐	(Must use erosion and sediment control and not block fish passage.)
PBR	☒	Approved ☒
Tier 1	☐	Approved ☐
Tier 2	☐	Approved ☐
Tier 3	☐	Approved ☐

☒ **Army Corps of Engineers (ACOE), Section 10 of the Rivers and Harbors Act and Section 404 of the Clean Water Act.**

No permit required ☐	
Category 1-NR☒	Approved ☒
Category 2☐	Approved ☐
Category 3☐	Approved ☐

☒ **IN-WATER TIMING RESTRICTIONS:** 105 Special Provision ☒ n/a ☐
Dates instream work is allowed: 7/15 to 10/1

☒ Special Provision 656, Erosion Control Plan
* Boxes marked in red indicate items that are attached and need to be placed in the contract by the Project Manager.

DEPARTMENT OF ENVIRONMENTAL PROTECTION (DEP)

PERMIT BY RULE NOTIFICATION FORM

(For use with DEP Regulation, Chapter 305)

■ **MDOT PIN: 11444.00**

Name of Applicant: **State of Maine Department of Transportation** **Name of Contact:** **David Gardner**
Mailing Address: **16 Station State House** **Town/City:** **Augusta** **State:** **Me.** **Zip Code:** **04330-0016**
Daytime Telephone #: **(207)-624-3105** **Name of Wetland, Water Body or Stream:** **Black Brook, Unnamed stream and wetland**

Detailed Directions to Site: Project is located on Route 26, beginning 1.91 miles northerly of the West Paris town line and extending northerly 2.68 miles.

Town/City: **Woodstock** **Map #:** N/A **Lot #:** N/A **County:** **Oxford**

Description of Project: Highway overlay involving culvert, guardrail, slope and ditch maintenance and repairs. The project will be performed in accordance with erosion control measures conforming with the latest versions of the *State of Maine Department of Transportation Standard Specifications for Highways and Bridges* and the *Department of Transportation's Best Management Practices for Erosion and Sediment Control.*

Part of a larger project? ☐**Yes** ☒**No**

(**CHECK ONE**) This project... ☒ does ☐ does not ...involve work below mean low water.

I am filing notice of my intent to carry out work which meets the requirements for Permit By Rule (PBR) under DEP Regulation, Chapter 305. I have a copy of PBR Sections checked below. I have read and will comply with all of the standards.

☐Sec. (2) Soil Disturbance	☐Sec. (8) Shoreline stabilization	☐Sec. (14) Piers, Wharves & Pilings
☐Sec. (3) Intake Pipes	☐Sec. (9) Utility Crossing	☐Sec. (15) Public Boat Ramps
☐Sec. (4) Replacement of Structures	☐Sec. (10) Stream Crossing	☐Sec. (16) Coastal Sand Dune Projects
☐Sec. (5) REPEALED	☒Sec. (11) State Transport. Facilities	☐Sec. (17) Transfers/Permit Extension
☐Sec. (6) Movement of Rocks or Vegetation	☐Sec. (12) Restoration of Natural Areas	☐Sec. (18) Maintenance Dredging
☐Sec. (7) Outfall Pipes	☐Sec. (13) F&W Creation/Enhance/Water Quality Improvement	

I authorize staff of the Departments of Environmental Protection, Inland Fisheries & Wildlife, and Marine Resources to access the project site for the purpose of determining compliance with the rules. I also understand that ***this permit is not valid until approved by the Department or 14 days after receipt by the Department, whichever is less.***

I have attached all of the following required submittals. **NOTIFICATION FORMS CANNOT BE ACCEPTED WITHOUT THE NECESSARY ATTACHMENTS:**

- ■ **A $50 (non-refundable) payment shall be done by internal billing.**
- ■ ***Attach*** **a U.S.G.S. topo map or Maine Atlas & Gazetteer map with the project site clearly marked.**
- ❑ ***Attach*** **photographs showing existing site conditions (unless not required under standards).**

Signature of Applicant: John E. Dority, Chief Engineer **Date:** 10/20/03

Keep the bottom copy as a record of permit. Send the form with attachments via certified mail to the Maine Dept. of Environmental Protection **at the appropriate regional office listed below**. The DEP will send a copy to the Town Office as evidence of the DEP's receipt of notification. No further authorization by DEP will be issued after receipt of notice. Permits are valid for two years. **Work carried out in violation of any standard is subject to enforcement action.**

AUGUSTA DEP STATE HOUSE STATION 17 AUGUSTA, ME 04333-0017 (207)287-2111 PORTLAND DEP 312 CANCO ROAD PORTLAND, ME 04103 (207)822-6300 BANGOR DEP 106 HOGAN ROAD BANGOR, ME 04401 (207)941-4570 PRESQUE ISLE DEP 1235 CENTRAL DRIVE PRESQUE ISLE, ME 04769 (207)764-0477

OFFICE USE ONLY	Ck.#	Staff		Staff	
PBR #	FP	Date	Acc. Date	Def. Date	After Photos

Chapter 305: PERMIT BY RULE Section 11
State Transportation Facilities

1. Introduction. A "permit by rule" or "PBR", when approved by the Department of Environmental Protection (DEP), is an approval for an activity that requires a permit under the Natural Resources Protection Act (NRPA). Only those activities described in this chapter may proceed under the PBR process. A PBR activity will not significantly affect the environment if carried out in accordance with this chapter, and generally has less of an impact on the environment than an activity requiring an individual permit. A PBR satisfies the Natural Resources Protection Act (NRPA) permit requirement and Water Quality Certification requirement.

If a proposed activity is not described in this chapter, or will not be conducted in accordance with the standards of this chapter, the applicant must obtain an individual permit prior to beginning the activity.

A. Location of activity. The location of an activity may affect whether an activity qualifies for PBR, and whether review by the Department of Inland Fisheries and Wildlife is required.

(1) Type of resource. For some types of activities, the availability of a PBR is affected by the type of natural resource in or adjacent to which the activity is proposed. For example, an applicant proposing an activity consisting of "Movement of rocks or vegetation" may receive a PBR only if the activity will take place in a great pond, river, stream or brook. Limitations concerning the location of activities are addressed in the "Applicability" provision in each section of this chapter.

(2) Essential habitat. Essential habitats include areas critical to the survival of threatened and endangered species such as the bald eagle, least tern, roseate tern, and piping plover. If the activity is located in essential habitat, such as near an eagle nesting site, a PBR is only available if the applicant obtains written approval from the Department of Inland Fisheries and Wildlife (IF&W). This approval from IF&W must be submitted to the DEP with the PBR notification form, and the applicant must follow any conditions stated in the IF&W approval.

NOTE: Maps showing areas of essential habitat are available from the Department of Inland Fisheries and Wildlife regional headquarters, municipal offices, the Land Use Regulation Commission (for unorganized territories) and DEP regional offices. If the activity is located in essential habitat, IF&W must be contacted to request and obtain a "certification of review and approval".

B. Notification. The applicant must file notice of the activity with the DEP prior to beginning work on the activity. The notification must be on a form provided by the DEP and must include any submissions required in this chapter. The applicant must keep a copy to serve as the permit.

The notification form must be sent to the DEP by certified mail (return receipt requested), or hand delivered to the DEP and date stamped by the department.

C. Effective period

(1) Beginning of period. The PBR becomes effective 14 calendar days after the DEP receives the notification form, unless the DEP approves or denies the PBR prior to that date. If the DEP does not speak with or write to the applicant within this 14 day period regarding the PBR notification, the applicant may proceed to carry out the activity.

There are three exceptions regarding the effective date of an approved PBR:

(a) Activities listed in Section 10 (Stream crossings) occurring in association with forest management are exempt from the 14 day waiting period.

(b) Activities listed in Section 2 (Soil disturbance) and Section 10 (Stream crossings) performed or supervised by individuals currently certified in erosion control practices by the DEP are exempt from the 14 day waiting period. To be certified in erosion control practices, an individual must successfully complete all course requirements of the Voluntary Contractor Certification Program administered by the DEP's Nonpoint Source Training and Resource Center.

(c) Activities that are part of a larger project requiring a permit under the Site Location of Development or the Storm Water Management Acts may not proceed until any required permit under those laws is obtained.

NOTE: Activities that are part of a larger project may require other permits from the DEP also. These other laws may prohibit the start of construction of any part of the project unless a permit under that law is obtained. In these cases, while not a violation of this rule, starting work on a PBR approved activity would be a violation of those other applicable laws.

(2) End of period. The PBR is generally effective for 2 years from the date of approval, except that a PBR for "Replacement of structures" under Section 4 is effective for 3 years.

NOTE: Activities that qualify under this chapter may need to meet other local, state and federal requirements. Examples -- (1) If an activity extends below the low water line of a lake, coastal wetland or international boundary water, the applicant should contact the Bureau of Parks and Lands (287-3061) concerning possible lease or easement requirements, or (2) If an activity will involve work below the mean high water line in navigable waters of the United States, the applicant should contact the Army Corps of Engineers (623-8367).

D. Discretionary authority. Notwithstanding compliance with the PBR applicability requirements and standards set forth in this chapter, the DEP may require an individual permit application to be filed in any case where credible evidence indicates that the activity:

(1) May violate the standards of the NRPA (38 M.R.S.A. Section 480-D);

(2) Could lead to significant environmental impacts, including cumulative impacts; or

(3) Could adversely impact a resource of special concern.

If an individual permit is required pursuant to this subsection, the DEP shall notify the applicant in writing within the 14 calendar day waiting period described in sub-section (C) above. When the DEP notifies an applicant than an individual permit is required, no work may be conducted unless and until the individual permit is obtained.

E. Violations. A violation of law occurs when a person, or his or her agent, performs or causes to be performed any activity subject to the NRPA without first obtaining a permit from the DEP, or acts contrary to the provisions of a permit. The person, his or her agent, or both, may be held

responsible for the violation. Commonly, the "person" is the landowner, and the "agent" is the contractor carrying out the activity. A violation occurs when:

(1) An activity occurs that is not allowed under PBR, whether or not a PBR notification form has been filed with and/or approved by the DEP;

(2) An activity occurs that is allowed under PBR, but a PBR for the activity has not become effective prior to the beginning of the activity; or

(3) An activity occurs that is allowed under PBR and a PBR for the activity is in effect, but the standards specified in this chapter are not met.

See the "applicability" provision under each activity for rules concerning what activities are allowed under PBR. A PBR is only valid for the person listed on the notification form, or for his or her agent.

Each day that a violation occurs or continues is considered a separate offense. Violations are subject to criminal penalties and civil penalties of not less than $100 nor more than $10,000 for each day of that violation (38 M.R.S.A. Section 349).

NOTE: A local Code Enforcement Officer (CEO) may take enforcement action for a violation of the Natural Resources Protection Act if he or she is authorized to represent a municipality in District Court, and he or she has been certified as familiar with court procedures, 30-A M.R.S.A. Section 4452(7).

Chapter 305 Section 11

State transportation facilities

A. Applicability

(1) This section applies to the maintenance, repair, reconstruction, rehabilitation, replacement or minor construction of a State Transportation Facility carried out by, or under the authority of, the Maine Department of Transportation or the Maine Turnpike Authority, including any testing or preconstruction engineering, and associated technical support services.

(2) This section does not apply to an activity within a coastal sand dune system.

NOTE: The construction of a transportation facility other than roads and associated facilities may be subject to the Storm Water Management Law, 38 M.R.S.A. Section 420-D.

B. Standards

(1) Photographs of the area to be altered by the activity must be taken before work on the site begins. The photographs must be kept on file and be made available at the request of the DEP.

(2) The activity must be reviewed by the Department of Inland Fisheries and Wildlife, the Department of Marine Resources, the Atlantic Salmon Authority, and the DEP's Division of Environmental Assessment prior to the notification being filed with the DEP. The activity must be performed according to any recommendations from these authorities.

(3) The activity must be performed in accordance with erosion control measures conforming with the State of Maine Department of Transportation Standard Specifications for Highways and Bridges Revision of April 1995 and with the Department of Transportation's Best Management Practices for Erosion and Sediment Control, September 1997.

NOTE: Guidance on the use of erosion control best management practices can be obtained from the on site Construction Manager.

(4) Alignment changes may not exceed a distance of 200 feet between the old and new center lines in any natural resource.

(5) The activity may not alter more than 300 feet of shoreline (both shores added together) within a mile stretch of any river, stream or brook, including any bridge width or length of culvert.

(6) The activity may not alter more than 150 feet of shoreline (both shores added together) within a mile stretch of any outstanding river segment identified in 38 M.R.S.A. 480-P, including any bridge width or length of culvert.

(7) The activity must minimize wetland intrusion. The activity is exempt from the provisions of Chapter 310, the Wetland Protection Rules, if the activity alters less than 15,000 square feet of natural resources per mile of roadway (centerline measurement) provided that the following impacts are not exceeded within the 15,000 square foot area:

(a) 1,000 square feet of coastal wetland consisting of salt tolerant vegetation or shellfish habitat; or

(b) 5,000 square feet of coastal wetland not containing salt tolerant vegetation or shellfish habitat; or

(c) 1,000 square feet of a great pond.

All other activities must be performed in compliance with all sections of Chapter 310, the Wetland Protection Rules, except 310.2(C), 5(A), 9(1), 9(B) and 9(C).

(8) The activity may not permanently block any fish passage in any watercourse containing fish. The applicant must improve passage beyond what restriction may already exist unless the Department of Inland Fisheries and Wildlife, the Department of Marine Resources, the Atlantic Salmon Authority and the DEP's Division of Environmental Assessment concur that the improvement is not necessary.

(9) Rocks may not be removed from below the normal high water line of any coastal wetland, freshwater wetland, great pond, river, stream or brook except to the minimum extent necessary for completion of work within the limits of construction.

(10) If work is performed in a river, stream or brook that is less than three feet deep at the time and location of the activity, with the exception of culvert installation, the applicant must divert flow away from the activity while work is in progress.

(a) Diversion may be accomplished by the use of stable, inert material. No more than two thirds (2/3) of stream width may be diverted at one time.

(b) Any material used to divert water flow must be completely removed upon completion of the activity, and the stream bottom must be restored to its original condition.

(c) A pump may be operated, where necessary, for a temporary diversion. The pump outlet must be located and operated such that erosion or the discharge of sediment to the water is prevented.

NOTE: Guidance on the appropriate location of a diversion and materials which should be used for a stream diversion can be obtained from the on site Construction Manager.

(11) Wheeled or tracked equipment may not operate in the water. Equipment operating on the shore may reach into the water with a bucket or similar extension. Equipment may cross streams on rock, gravel or ledge bottom.

(12) All wheeled or tracked equipment that must travel or work in a vegetated wetland area must travel and work on mats or platforms.

(13) Any debris or excavated material must be stockpiled either outside the wetland or on mats or platforms. Hay bales or silt fence must be used, where necessary, to prevent sedimentation. Any debris generated during the activity must be prevented from washing downstream and must be removed from the wetland or water body. Disposal of debris must be in conformance with the Maine Hazardous Waste, Septage and Solid Waste Management Act, 38 M.R.S.A. Section 1301 et seq.

(14) Work below the normal high water line of a great pond, river, stream or brook must be done at low water except for emergency work or work agreed to by the resource agencies listed in paragraph 2 above. Measures, such as a silt boom or staked fencing, must be employed to reduce and isolate turbidity.

(15) Perimeter controls must be installed before the work starts. Disturbance of natural resources beyond the construction limits shown on the plans is not allowed under this rule.

NOTE: Guidance on the location of construction limits can be obtained from the on site Construction Manager.

(16) The use of untreated lumber is preferred. Lumber pressure treated with chromated copper arsenate (CCA) may be used, provided it is cured on dry land in a manner that exposes all surfaces to the air for a period of at least 21 days prior to construction. Wood treated with creosote or pentachlorophenol may not be used where it will contact water.

(17) A temporary road for equipment access must be constructed of crushed stone, blasted ledge, or similar materials that will not cause sedimentation or restrict fish passage. Such roads must be completely removed at the completion of the activity. In addition, any such temporary roads which are in rivers, streams or brooks, must allow for a passage of stormwater flows associated with a 10-year storm.

(18) Soil may not be disturbed during any period when soils are saturated due to rain or snow melt, except as necessary to protect work in progress or as required for bridge maintenance activities. Areas where soils are saturated (i.e. water drips from the soil when squeezed by hand, or the soil is capable of being rolled into a rod 1/8th inch in diameter that does not crumble) must be immediately mulched if they are disturbed.

(19) Disturbed soil must be protected within one week from the time it was last actively worked, and prior to any storm event, using temporary or permanent measures such as the placement of riprap, sod, mulch, erosion control blankets, or other comparable measures.

(20) Hay bale or straw mulch, where used, must be applied at a rate of at least one bale per 500 square feet (1 to 2 tons per acre).

(21) If mulch is likely to be moved because of steep slopes or wind exposure, it must be anchored with netting, peg and twine, binder or other suitable method and must be maintained until a catch of vegetation is established over the entire disturbed area.

(22) In addition to the placement of riprap, sod, erosion control blankets or mulch, additional steps must be taken where necessary to prevent sedimentation of the water Evidence of sedimentation includes visible sheet, rill or gully erosion, discoloration of water by suspended particles and/or slumping of banks. Silt fences, staked hay bales and other sedimentation control measures, where planned for, must be in place prior to the commencement of an activity, but must also be installed whenever necessary to prevent erosion and sedimentation.

NOTE: Guidance on the location and proper installation of erosion control measures can be obtained from the on site Construction Manager.

(23) Temporary erosion control measures must be maintained and inspected weekly until the site is permanently stabilized with vegetation or other permanent control measures. Erosion control measures must also be inspected immediately prior to and following storms.

(24) Permanent erosion control measures protecting all disturbed areas must be implemented within 30 days from the time the areas were last actively worked, or for fall and winter activities by the following June 15, except where precluded by the type of activity (e.g. riprap, road surfaces, etc.). The permanent erosion control measures must be maintained.

(25) The applicant shall immediately take appropriate measures to prevent erosion or sedimentation from occurring or to correct any existing problems, regardless of the time of year.

(26) Non-native species may not be planted in restored areas.

(27) Disposal of debris must be in conformance with Maine Hazardous Waste, Septage and Solid Waste Management Act, 38 M.R.S.A. Sections 1301 et seq.

(28) Disturbance of vegetation must be avoided, if possible. Where vegetation is disturbed outside of the area covered by any road or structure construction, it must be reestablished immediately upon completion of the activity and must be maintained.

(29) A vegetated area at least 25 feet wide must be established and maintained between any new stormwater outfall structure and the high water line of any open water body. A velocity reducing structure must be constructed at the outlet of the stormwater outfall that will create sheet flow of stormwater, and prevent erosion of soil within the vegetated buffer. If the 25 foot vegetated buffer is not practicable, the applicant must explain the reason for a lesser setback in writing. Approval from the DEP must be in writing and any recommendations must be incorporated into the activity.

C. Definitions. The following terms, as used in this chapter, have the following meanings, unless the context indicates otherwise:

(1) Diversion. A rerouting of a river, stream or brook to a location outside of its established channel.

(2) Fill. a. (verb) To put into or upon, supply to, or allow to enter a water body or wetland any earth, rock, gravel, sand, silt, clay, peat, or debris; b. (noun) Material, other than structures, placed in or immediately adjacent to a wetland or water body.

(3) Floodplain wetlands. Freshwater wetlands that are inundated with flood water during a 100-year flood event based on flood insurance maps produced by the Federal Emergency Agency or other site specific information.

(4) Riprap. Rocks that are fit into place, usually without mortar, on a slope as defined in the State of Maine, Department of Transportation, Standard Specifications for Highway and Bridges, revision of April 1995.

Permit No: GP-39

Effective Date: Sept. 29, 2000
Expiration Date: Sept. 29, 2005

Applicant: General Public, State of Maine

DEPARTMENT OF THE ARMY
PROGRAMMATIC GENERAL PERMIT
STATE OF MAINE

The New England District of the U.S. Army Corps of Engineers hereby issues a programmatic general permit (PGP) that expedites review of minimal impact work in coastal and inland waters 1 and wetlands within the State of Maine. Activities with minimal impacts, as specified by the terms and conditions of this general permit and on the attached DEFINITION OF CATEGORIES sheets, are either non-reporting (provided required local and state permits are received), or are reporting, to be screened by the Corps and Federal Resource Agencies for applicability under the general permit. This general permit does not affect the Corps individual permit review process or activities exempt from Corps jurisdiction.

Activities Covered: work and structures that are located in, or that affect, navigable waters of the United States (regulated by the Corps under Section 10 of the Rivers and Harbors Act of 1899) and the discharge of dredged of fill material into waters of the United States (regulated by the Corps under Section 404 of the Clean Water Act), and the transportation of dredged material for the purpose of disposal in the ocean (regulated by the Corps under Section 103 of the Marine Protection, Research and Sanctuaries Act).

PROCEDURES:

A. **State Approvals**

For projects authorized pursuant to this general perrnit that are also regulated by the State of Maine, the following state approvals are also required and must be obtained in order for this general permit authorization to be valid (applicants are responsible for ensuring that all required state permits and approval have been obtained):

(a) Maine Department of Environmental Protection (DEP): Natural Resources Protection Act permit, including permit-by-rule and general permit authorizations; Site Location and Development Act permit; and Maine Waterway Development and Conservation Act.
(b) Maine Department of Conservation: Land Use Regulation Commission (LURC) permit.
(c) Maine Department of Marine Resources: Lease.
(d) Bureau of Public Lands, Submerged Lands: Lease.

Note that projects not regulated by the State of Maine (e.g., seasonal floats or moorings) may still be authorized by this general permit.

B. **Corps Authorizations: Category I (Non-Reporting)**

Work in Maine subject to Corps jurisdiction that meets the definition of Category I on the attached DEFINITION OF CATEGORIES sheets and that meets all of this permit's other conditions, does not require separate application to the Corps of Engineers. If the State or the Corps does not contact the applicant for PBRs and Tier One permits during the State's Tier One 30-day review period, Corps approval may be assumed and the project may proceed. Refer to the Procedures Section at Paragraph E below for additional information regarding screening.

Note that the review thresholds under Category I apply to single and complete projects i only (see special condition 5). **Also note that Category I does not apply to projects occurring in a component of, or within 0.25 miles up and downstream of the main stem or tributaries of a river segment of the National Wild and Scenic River System** (see condition 11, and page 9 for the listed rivers in Maine).

There are also restrictions on other national lands or concerns, which must be met in order for projects to be eligible for authorization under this PGP. Refer to special conditions 6-13 under Paragraph F below.

Work that is not regulated by the State of Maine, but that is subject to Corps jurisdiction, is eligible for Corps authorization under this PGP in accordance with the review thresholds and conditions contained herein.

Although Category I projects are non-reporting, the Corps reserves the right to require screening or an individual permit review if there are concerns for the aquatic environment or any other factor of the public interest (see special condition 4 on Discretionary Authority). The Corps review or State/Federal screening process may also result in project modification, mitigation or other special conditions necessary to minimize impacts and protect the aquatic environment as a requirement for PGP approval.

C. Corps Authorization: Category II (Reporting - requiring screening)
APPLICATION PROCEDURES

For projects that do not meet the terms of Category I (see DEFINITION OF CATEGORIES sheets), the Corps, State, and Federal Resource Agencies will conduct joint screening meetings to review applications. If projects are concurrently regulated by the DEP or LURC, applicants do not need to submit separate applications to the Corps. For projects not regulated by DEP or LURC, applicants must submit an application to the Corps Maine Project Office for a case-by-case determination of eligibility under this general permit (Category II). **Category II projects may not proceed until written notification is received from the Corps.**

Category II projects which occur in a component of, or within 0.25 mile up or downstream of the main stem or tributaries of a river segment of the National Wild and Scenic River System, will be coordinated with the National Park Service (see special condition 11, and page 9 for listed rivers in Maine).

There are also restrictions on other national lands or concerns, which must be met in order for projects to be eligible for authorization under this PGP. Refer to special conditions 6-14 under Paragraph E below.

Category II applicants shall submit a copy of their application materials to the Maine Historic Preservation Commission and/or applicable Indian tribe(s) at the same time, or before, they apply to the DEP, LURC, or the Corps so that the project can be reviewed for the presence of historic/archaeological resources in the project area that may be affected by the proposed work. **Applications to the DEP or the Corps should include information to indicate that this has been done (applicant's statement or copy of cover letter to Maine Historic Preservation Commission and/or Indian tribe(s)).**

The Corps may require additional information on a case-by-case basis as follows:

(a) purpose of project;

(b) 8 1/2" by l l " plan views of the entire property including property lines and project limits with existing and proposed conditions **(legible, reproducible plans required);**

(c) wetland delineation for the site, information on the basis of the delineation, and calculations of waterway and wetland impact areas (see special condition 2);

(d) typical cross-section views of all wetland and waterway fill areas and wetland replication areas;

(e) delineation of submerged aquatic vegetation, e.g., eel grass beds, in tidal waters;

(f) area, type and source of fill material to be discharged into waters and wetlands, including the volume of fill below ordinary high water in inland waters and below the high tide line in coastal waters;

(g) mean low, mean high water and high tide elevations in navigable waters;

(h) limits of any Federal navigation project in the vicinity and State Plane coordinates for the limits of the proposed work closest to the Federal project;

(i) on-site alternatives analysis (contact Corps for guidance);

(j) identify and describe potential impacts to Essential Fish Habitat (contact Corps for guidance);

(k) for dredging projects, include:
1) the volume of material and area in square feet to be dredged below mean high water,
2) existing and proposed water depths,
3) type of dredging equipment to be used,
4) nature of material (e.g., silty sand),

5) any existing sediment grain size and bulk sediment chemistry data for the proposed or any nearby projects,
6) information on the location and nature of municipal or industrial discharges and occurrences of any contaminant spills in or near the project area,
7) location of the disposal site (include locus sheet),
8) shellfish survey, and
9) sediment testing, including physical, chemical and biological testing. For projects proposing open water disposal, applicants are encouraged to contact the Corps as early as possible regarding sampling and testing protocols.

The Corps may request additional information. Dredging applicants may be required to conduct a shellfish and/or eel grass survey and sediment testing, including physical, chemical and biological testing. Sediment sampling and testing plans should be prepared or approved by the Corps before the samples are collected.

STATE-FEDERAL SCREENING PROCEDURES:

The Corps intends to utilize the application information required by the State for its regulatory program to the maximum extent practicable and the Corps normally will not be interacting with an applicant who is concurrently making application to the DEP or LURC. Projects not regulated by the State, but needing Corps of Engineers approval, **must apply directly to the Corps.** The joint screening meeting for Category II projects will occur regularly at the Corps or State of fices and will involve representatives from the DEP, the Corps, the U.S. Environmental Protection Agency, the U.S. Fish and Wildlife Service, and the National Marine Fisheries Service.

The Corps and Federal Resource Agencies will classify the project within the State's review period, not to exceed 60 days, as: 1) approvable under the PGP as proposed; 2) needs additional information, including possible project modification, mitigation or other special conditions to minimize impacts; or 3) exceeds the terms or conditions of the PGP, including the minimal effects requirement, and an individual permit review will be required. In addition, the Corps retains the ability to exercise its discretionary authority and require an individual permit, irrespective of whether the terms and conditions of this general permit are met, based on concerns for the aquatic environment or any factor of the public interest (see special condition 4 on Discretionary Authority). All Category II projects must receive written approval from the Corps before work can proceed. If the project is not approvable as proposed, the DEP, LURC, or the Corps will contact the applicant to discuss the concerns raised. If the applicant is unable to resolve the concerns, the Corps, independently or at the request of the Federal Resource Agencies, will require an individual permit for the project. The applicant will be notified of this in writing, along with information about submitting the necessary application materials. The comments from the Federal Resource Agencies to the Corps may be verbal initially, and must be made within 10 working days of the screening meeting. These comments must be confirmed in writing within 10 calendar days of the verbal response if the Resource Agency(ies) will request an individual permit. The Federal Resource Agency's comments must reflect a concern within their area of expertise, state the species or resources that could be impacted by the project, and describe the impacts that either individually or cumulatively will be more than minimal.

MINERALS MANAGEMENT SERVICE (MMS) REVIEW

For Category II projects which involve construction of solid fill structures or discharge of fills along the coast which may extend the coastline or baseline from which the territorial sea is measured, coordination between the Corps and Minerals Management Service (MMS), Continental Shelf (OCS) Survey Group, will be needed (pursuant to the Submerged Lands Act, 43 U.S.C., Section 1301-1315, 33 CFR 320.4(f). During the screening period, the Corps will forward project information to MMS for their review. MMS will coordinate their determination with the Department of the Interior (DOI) Solicitor's Office. The DOI will have 15 calendar days from the date MMS is in receipt of project information to determine if the baseline will be affected. No notification to the Corps within 15 day review period will constitute a "no affect" determination. Otherwise, the solicitor's notification to the Corps may be verbal but must be followed with a written confirmation within 10 business days from the date of the verbal notification. This procedure will be eliminated if the State of Maine provides a written waiver of interest in any increase in submerged lands caused by a change in the baseline resulting from solid fill structure or fills authorized under this general permit.

D. Corps Authorization: Category III (Individual Permit)

Work that is in the INDIVIDUAL PERMIT category on the attached DEFINITION OF CATEGORIES sheets, or that does not meet the terms and conditions of this general permit, will require an application for an individual permit from the Corps of Engineers (see 33 CFR Part 325.1). The screening procedures outlined above will only serve to delay project review in such cases. The applicant should submit the appropriate application materials (including the Corps application form) at the earliest possible date. General information and application forms can be obtained at (207) 623-8367 (Maine Field Office), (800) 343-4789, or (800) 362-4367 in Massachusetts. Individual water quality certification and coastal zone management consistency concurrence will be required from the State of Maine before Corps permit issuance.

E. Programmatic General Permit Conditions:

The following conditions apply to activities authorized under the PGP, including all Category I (non-reporting) and Category II (reporting - requiring screening) activities:

GENERAL REQUIREMENTS:

1. **Other Permits.** Authorization under this general permit does not obviate the need to obtain other Federal, state, or local authorizations required by law.

2. **Applicability of this general permit shall be evaluated with reference to Federal jurisdictional boundaries.** Applicants are responsible for ensuring that the boundaries used satisfy the federal criteria defined at 33 CFR 328-329.

3. **Minimal Effects.** Projects authorized by this general permit shall have minimal individual and cumulative adverse environmental impacts as determined by the Corps.

4. **Discretionary Authority.** Notwithstanding compliance with the terms and conditions of this permit, the Corps of Engineers retains discretionary authority to require review for an individual permit based on concerns for the aquatic environment or for any other factor of the public interest. This authority is invoked on a case-by-case basis whenever the Corps determines that the potential consequences of the proposal warrant individual review based on the concerns stated above. This authority may be invoked for projects with cumulative environmental impacts that are more than minimal or if there is a special resource or concern associated with a particular project that is not already covered by the remaining conditions of the PGP and that warrants greater review.

Whenever the Corps notifies an applicant that an individual permit may be required, authorization under this general permit is void and no work may be conducted until the individual Corps permit is obtained or until the Corps notifies the applicant that further review has demonstrated that the work may proceed under this general permit.

5. **Single and Complete Projects.** This general permit shall not be used for piecemeal work and shall be applied to single and complete projects. All components of a single project and/or all planned phases of multi-phased projects shall be treated together as constituting one single and complete project (e.g., subdivisions should include all work such as roads, utilities, and lot development). This general permit shall not be used for any activity that is part of an overall project for which an individual permit is required.

NATIONAL CONCERNS:

6. St. **John/St. Croix Rivers.** This covers work within the Saint John and Saint Croix River basins that requires approval of the International Joint Commission. This includes any temporary or permanent use, obstruction or diversion of international boundary waters which could affect the natural flow or levels of waters on the Canadian side of the line, as well as any construction or maintenance of remedial works, protective works, dams, or other obstructions in waters downstream from boundary waters when the activity could raise the natural level of water on the Canadian side of the boundary.

7. **Historic Properties.** Any activity authorized by this general permit shall comply with Section 106 of the National Historic Preservation Act. Information on the location and existence of historic resources can be obtained from the Maine Historic Preservation Commission and the National Register of Historic Places. Federally recognized tribes (Penobscots, Passamaquoddys, Micmacs, and Maliseets) may know of the existence of other sites that may be of significance to their tribes. See page 14 for historic properties contacts.

Applicants with projects which will undergo the screening process (Category II) shall submit a copy of their application materials, with the name and address of the applicant clearly indicated, to the Maine Historic Preservation Commission, 55 Capitol Street, State House Station 65, Augusta, Maine 04333, and to the applicable tribe(s) to be reviewed for the presence of historic and/or archaeological resources in the permit area that may be affected by the proposed work. The Corps will then be notified by the Commission and/or

Tribe within 10 days if there are State and/or tribal concerns that the proposed work will have an effect on historic resources. The applicant should include with their application to the State or the Corps either a copy of their cover letter or a statement of having sent their application material to the Commission and Tribe(s).

If the permittee, either prior to construction or during construction of the work authorized herein, encounters a previously unidentified archaeological or other cultural resource, within the area subject to Department of the Army jurisdiction, that might be eligible for listing in the National Register of Historic Places, he/she shall stop work and immediately notify the District Engineer and the Maine Historic Preservation Commission and/or applicable Tribe(s).

8. **National Lands.** Activities authorized by this general permit shall not impinge upon the value of any National Wildlife Refuge, National Forest, or any area administered by the National Park Service.

9. **Endangered Species.** No activity is authorized under this general permit which
- may affect a threatened or endangered species or a species proposed for such designation as identified under the Federal Endangered Species Act (ESA),
- is likely to destroy or adversely modify the critical habitat or proposed critical habitat of such species,
- would result in a 'take' of any threatened or endangered species of fish or wildlife, or
- would result in any other violation of Section 9 of the ESA protecting threatened or endangered species of plants.

Applicants shall notify the Corps if any listed species or critical habitat, or proposed species or critical habitat, is in the vicinity of the project and shall not begin work until notified by the District Engineer that the requirements of the Endangered Species Act have been satisfied and that the activity is authorized. Information on the location of threatened and endangered species and their critical habitat can be obtained from the U.S. Fish and Wildlife Service and National Marine Fisheries Service (addresses attached, page 14).

10. **Essential Fish Habitat.** As part of the PGP screening process, the Corps will coordinate with the National Marine Fisheries Service (NMFS) in accordance with the 1996 amendments to the Magnuson-Stevens Fishery and Conservation Management Act to protect and conserve the habitat of marine, estuarine and anadromous finfish, mollusks, and crustaceans. This habitat is termed "essential fish habitat (EFH)", and is broadly defined to include "those waters and substrate necessary to fish for spawning, breeding, feeding, or growth to maturity." Applicants may be required to describe and identify potential impacts to EFH based upon the location of the proj ect, the activity proposed, and the species present. Conservation recommendations made by NMFS will normally be included as a permit requirement by the Corps. Information on the location of EFH can be obtained from the NMFS regulations (50 CFR Part 600) (address listed on page 14) and on their web site (http://www.nero.nmfs.gov/ro/doc/webintro.html).

The EFH designation for Atlantic salmon includes all aquatic habitats in the watershed of the following rivers and streams, including all tributaries to the extent that they are currently or were historically accessible for salmon migration:

St. Croix River	PleasantRiver	UnionRiver
Boyden River	Narraguagus River	Ducktrap River
Dennys River	Tunk Stream	Sheepscot River
Hobart Stream	Patten Stream	Kennebec River
Aroostook River	Orland River	Androscoggin River
East Machias River	Penobscot River	Presumpscot River
Machias River	Passagassawaukeag River	Saco River

11. **Wild and Scenic Rivers.** Any activity that occurs in a component of, or within 0.25 mile up or downstream of the main stem or tributaries of a river segment of the National Wild and Scenic River System, **must be reviewed by the Corps under the procedures of Category II of this general permit regardless of size of impact.** This condition applies to both designated wild and scenic rivers and rivers designated by Congress as study rivers for possible inclusion while such rivers are in an official study status. The Corps will consult with the National Park Service (NPS) with regard to potential impacts of the proposed work on the resource values of the Wild and Scenic River. The culmination of this coordination will be a determination by the NPS and the Corps that the work: (1) may proceed as proposed; (2) may proceed with recommended conditions; or (3) could pose a direct and adverse effect on the resource values of the river and an individual permit is required. If pre-application consultation between the applicant and the NPS has occurred whereby the NPS has made a determination that the proposed project is appropriate for authorization under this PGP (with respect to wild and scenic river issues), this determination should be furnished to the Corps with submission of the application. The address of the NPS can be found on Page 14 of this permit. *National Wild/Scenic Rivers System (Designated River in Maine) as of 5/2/00:* Allagash River beginning at Telos Dam continuing to Allagash checkpoint at Eliza Hole Rapids, approximately 3 miles upstream of the confluence with the St. John River. Length = 92 miles

12. **Federal Navigation Project.** Any structure or work that extends closer to the horizontal limits of any Corps navigation project than a distance of three times the project's authorized depth (see attached map following page 16 for locations of these projects) shall be subject to removal at the owner's expense prior to any future Corps dredging or the performance of periodic hydrographic surveys.

13. **Navigation.** There shall be no unreasonable interference with navigation by the existence or use of the activity authorized herein and no attempt shall be made by the permittee to prevent the full and free use by the public of all navigable waters at or adjacent to the activity authorized herein.

The permittee understands and agrees that, if future operations by the United States require the removal, relocation, or other alteration, of the structure or work herein authorized, or if, in the opinion of the Secretary of the Army or his authorized representative, said structure

or work shall cause unreasonable obstruction to the free navigation of the navigable waters, the permittee will be required, upon due notice from the Corps of Engineers, to remove, relocate, or alter the structural work or obstructions caused thereby, without expense to the United States. No claim shall be made against the United States on account of any such removal or alteration.

14. **Federal Liability.** In issuing this permit, the Federal Government does not assume any liability for the following: (a) damages to the permitted project or uses thereof as a result of other permitted or unpermitted activities or from natural causes; (b) damages to the permitted project or uses thereof as a result of current or future activities undertaken by or on behalf of the United States in the public interest; (c) damages to persons, property, or to other permitted or unpermitted activities or structures caused by the activity authorized by this permit; (d) design or construction deficiencies associated with the permitted work; (e) damage claims associated with any future modification, suspension, or revocation of this permit.

MINIMIZATION OF ENVIRONMENTAL IMPACTS:

15. **Minimization.** Discharges of dredged or fill material into waters of the United States shall be avoided and minimized to the maximum extent practicable, regardless of review category.

16. **Work in Wetlands.** Heavy equipment working in wetlands shall be avoided if possible, **and if required, shall be placed on mats or other measures taken** to minimize soil and vegetation disturbance. Disturbed areas in wetlands shall be restored to preconstruction contours and conditions upon completion of the work.

17. **Temporary Fill.** Temporary fill in waters and wetlands authorized by this general permit (e.g., access roads, cofferdams) shall be properly stabilized during use to prevent erosion. Temporary fill in wetlands shall be placed on geotextile fabric laid on existing wetland grade. Temporary fills shall be disposed of at an upland site, suitably contained to prevent erosion and transport to a waterway or wetland. Temporary fill areas shall be restored to their approximate original contours but not higher. No temporary fill shall be placed in waters or wetlands unless specifically authorized by the Corps.

18. **Sedimentation and Erosion Control.** Adequate sedimentation and erosion control management measures, practices and devices, such as phased construction, vegetated filter strips, geotextile silt fences or other devices, shall be installed and properly maintained to reduce erosion and retain sediment on-site during and after construction. They shall be capable of preventing erosion, of collecting sediment, suspended and floating materials, and of filtering fine sediment. These devices shall be removed upon completion of work and the disturbed areas shall be stabilized. The sediment collected by these devices shall be removed and placed at an upland location in a manner that will prevent its later erosion into a waterway or wetland. All exposed soil and other fills shall be permanently stabilized at the earliest practicable date.

19. **Waterway Crossings.**

(a) All temporary and permanent crossings of waterbodies shall be suitably culverted, bridged, or otherwise designed to withstand and to prevent the restriction of high flows, to maintain existing low flows, and to not obstruct the movement of aquatic life indigenous to the waterbody beyond the actual duration of construction.
(b) Temporary bridges, culverts, or cofferdams shall be used for equipment access across streams (NOTE: areas of fill and/or cofferdams must be included in total waterway/wetlands impacts to determine applicability of this general permit).
(c) For projects that otherwise meet the terms of Category I, instream construction work shall be conducted during the low flow period July 15 - October 1 in any year. Projects that are not to be conducted during that time period are ineligible for Category I and shall be screened pursuant to Category II, regardless of the waterway and wetland fill and/or impact area.

20. **Discharge of Pollutants.** All activities involving any discharge of pollutants into waters of the United States authorized under this general permit shall be consistent with applicable water quality standards, effluent limitations, standards of performance, prohibitions, and pretreatment standards and management practices established pursuant to the Clean Water Act (33 U.S.C. 1251) and applicable state and local laws. If applicable water quality standards, limitations, etc., are revised or modified during the term of this permit, the authorized work shall be modified to conform with these standards within six months of the effective date of such revision or modification, or within a longer period of time deemed reasonable by the District Engineer in consultation with the Regional Administrator of the Environmental Protection Agency. Applicants may presume that state water quality standards are met with issuance of the 401 Water Quality Certification.

21. **Spawning Areas.** Discharges into known 1) fish and shellfish spawning or nursery areas; and 2) amphibian and waterfowl breeding areas, during spawning or breeding seasons shall be avoided, and impacts to these areas shall be avoided or minimized to the maximum extent practicable during all times of year.

22. **Storage of Seasonal Structures.** Coastal structures such as pier sections and floats that are removed from the waterway for a portion of the year shall be stored in an upland location located above mean high water and not in tidal marsh.

23. **Environmental Values.** The permittee shall make every reasonable effort to carry out the construction or operation of the work authorized herein in a manner so as to maintain as much as is practicable, and to minimize any adverse impacts on, existing fish and wildlife and natural environmental values.

24. **Protection of Vernal Pools.** Impacts to uplands in proximity (within 500 feet) to the vernal pools referenced in DEFINITIONS OF CATEGORIES shall be minimized to the maximum extent possible.

PROCEDURAL CONDITIONS:

25. **Cranberry Development Projects.** For Cranberry development projects authorized under the PGP, the following conditions apply:

4

1. If a.cranberry bog is abandoned for any reason, the area must be allowed to convert to natural wetlands unless an individual permit is obtained from the Corps of Engineers allowing the discharge of fill for an alternate use.
2. No stream diversion shall be allowed under this permit.
3. No impoundment of perennial streams shall be allowed under this permit.
4. The project shall be designed and constructed to not cause flood damage on adjacent properties.

26. **Inspections.** The permittee shall permit the District Engineer or his authorized representative(s) to make periodic inspections at any time deemed necessary in order to ensure that the work is being performed in accordance with the terms and conditions of this permit. The District Engineer may also require post-construction engineering drawings for completed work, and post-dredging survey drawings for any dredging work. **To facilitate these inspections, the attached work notification form should be filled out and returned to the Corps for all Category II projects.**

27. Maintenance. The permittee shall maintain the work or structures authorized herein in good condition, including maintenance, to ensure public safety. Dredging projects: note that this does not include maintenance of dredging projects. Maintenance dredging is subject to the review thresholds described on the attached DEFINITION OF CATEGORIES sheets and/or any conditions included in a written Corps authorization.

28. **Property Rights.** This permit does not convey any property rights, either in real estate or material, or any exclusive privileges, nor does it authorize any injury to property or invasion of rights or any infringement of federal, state, or local laws or regulations. If **property associated with work authorized by the PGP is sold, the PGP authorization is automatically transferred to the new property owner. The new property owner should provide this information to the Corps in writing. No acknowledgement from the Corps is necessary.**

29. **Modification, Suspension, and Revocation.** This permit may be either modified, suspended, or revoked, in whole or in part, pursuant to the policies and procedures of 33 CFR 325.7 and any such action shall not be the basis for any claim for damages against the United States.

30. **Restoration.** The permittee, upon receipt of a notice of revocation of authorization under this permit, shall restore the wetland or waterway to its former condition without expense to the United States and as directed by the Secretary of the Army or his authorized representative. If the permittee fails to comply with such a directive, the Secretary or his designee may restore the wetland or waterway to its former condition, by contract or otherwise, and recover the cost from the permittee.

31. **Special Conditions.** The Corps, independently or at the request of the Federal Resource Agencies, may impose other special conditions on a project authorized pursuant to this general permit that are determined necessary to minimize adverse environmental effects or based on any other factor of the public interest. Failure to comply with all conditions of the authorization, including special conditions, will constitute a permit violation and may subject the permittee to criminal, civil, or administrative penalties or restoration.

32. **False or Incomplete Information.** If the Corps makes a determination regarding the eligibility of a project under this permit and subsequently discovers that it has relied on false, incomplete, or inaccurate information provided by the permittee, the permit shall not be valid and the government may institute appropriate legal proceedings.

33. **Abandonment.** If the permittee decides to abandon the activity authorized under this general permit, unless such abandonment is merely the transfer of property to a third party, he/she must restore the area to the satisfaction of the District Engineer.

34. **Enforcement cases.** This general permit does not apply to any existing or proposed activity in Corps jurisdiction associated with an on-going Corps of Engineers or Environmental Protection Agency enforcement action until such time as the enforcement action is resolved or the Corps determines that the activity may proceed independently without compromising the enforcement action. The Corps may choose not to accept applications or issue permits to any applicant with outstanding violations.

35. **Emergency situations.** This PGP can be used to authorize the repair, rehabilitation, or replacement of those structures destroyed by storms, floods, fire or other discrete unexpected and catastrophic event. In such situations and if the work exceeds Category I limitations, if applicant applies to the Corps within 30 days of the event, the Corps will attempt to contact the resource agencies for their approvals but, if unable to contact them, will issue an emergency permit and review them after-the-fact with the agencies at the next joint processing meeting. Proposed work submitted more than 30 days after the emergency will go through the standard PGP procedures.

DURATION OF AUTHORIZATION/GRANDFATHERING:

36. **Duration of Authorization.** Activities authorized under this general permit that have commenced (i.e., are under construction) or are under contract to commence in reliance upon this authorization will remain authorized provided the activity is completed within twelve months of the date of the general permit's expiration, modification, or revocation, unless discretionary authority has been exercised on a case-by-case basis to modify, suspend, or revoke the authorization in accordance with 33 CFR 325.2 (e)(2). Activities completed under the authorization of the general permit that was in effect at the time the activity was completed will continue to be authorized by the general permit.

37. **Previously Authorized Activities.**

(a) Activities which have commenced (i.e., are under construction or are under contract to commence) prior to the issuance date of this general permit, in reliance upon the terms and conditions of the non-reporting category of the previous Maine PGP shall remain authorized provided the activity is completed within twelve months of the date of issuance of this general permit, unless discretionary authority has been exercised on a case-by-case basis to modify, suspend, or revoke the authorization in accordance with special condition 4. The applicant must be able to document to the Corps satisfaction that the proj ect was under construction or contract by the appropriate date.

(b) Projects that have received written verification or approval from the Corps, based on applications made to the Corps prior to issuance of this general permit, for the previous Maine SPGP and PGP, Nationwide permits, regional general permits, or letters of permission shall remain authorized as specified in each authorization.

(c) This general permit does not affect activities authorized pursuant to 33 CFR Part 330.3 (activities occurring before certain dates).

For DISTRICT ENGiNEER Christine Gedfrey DATE 7 / 26 / 00

CONTACTS FOR MAINE PROGRAMMATIC GENERAL PERMIT:

U.S. Army Corps of Engineers
Maine Project Office
675 Western Avenue #3
Manchester, Maine 04351
207-623-8367
Fax # 207-623-8206

Federal Endangered Species
U.S. Fish and Wildlife Service
Maine Field Office
1033 South Main Street
Old Town, Maine 04468
207-827-5938
Fax # 207-827-6099

Federal Endangered Species and Essential Fish Habitat
National Marine Fisheries Service
One Blackburn Drive
Gloucester, Massachusetts 01939
978-281-9102
Fax # 978-281-9301

Wild and Scenic Rivers
National Park Service
North Atlantic Region
15 State Street
Boston, MA 02109
617-223-5203

Maine Historic Preservation Commission
55 Capitol Street
State House Station 65
Augusta, Maine 04333
207-287-2132
Fax # 207-287-2335

Aroostook Band of Micmacs
P.O. Box 772
Presque Isle, Maine 04769
207-764-1972
Fax # 207-764-7667

Passamaquoddy Tribe of Indians
Pleasant Point Reservation
Attn: Tribal Council
P.O. Box 343
Perry, Maine 04667
207-853-2600
Fax # 207-853-6039

Houlton Band of Maliseet Indians
Attn: Brenda Commander, Tribal Chief
Route 3 - Box 450
Houlton, Maine 04730
207-532-4273
Fax # 207-532-2660

Passamaquoddy Tribe of Indians
Indian Township Reservation
Attn: Donald Soctomah
P.O. Box 301
Princeton, Maine 04668
207-796-2301
Fax # 207-796-5256

Penobscot Indian Nation
Richard Hamilton, Chief
6 River Road
Indian Island Reservation
Old Town, Maine 04468
(207) 827-7776
Fax # 207-827-1137

Maine Department of Environmental Protection
(For State Permits and Water Quality Certifications)
Natural Resources Division
Bureau of Land and Water Quality Control
State House Station 17
Augusta, Maine 04333
207-287-2111

Southern Maine Regional Office
312 Canco Road
Portland, Maine 04103
201-822-6300

Eastern Maine Regional Office
106 Hogan Road
Bangor, Maine 04401
207-941-4570

Northern Maine Regional Office
1235 Central Drive
Skyway Park
Presque Isle, Maine 04769
207-764-0477

MaineLand UseRegulation Commission (LURC) offices
22 State House Station
Augusta, ME 04333-0022
207-287-2631
800-452-8711 (call to obtain appropriate LURC of fice)
Fax # 207-287-7439

45 Radar Road
Ashland,ME 04732-3600
207-435-7963
Fax # 207-435-7184

Lakeview Drive
P.O.BoxllO7
Greenville, ME 04441
207-695-2466
Fax # 207-695-2380

191 Main Street
EastMillinocket,ME 04430
207-746-2244
Fax # 207-746-2243

i

(For CZMDeterminations)
State Planning Office
Coastal Program
184 State Street
State House Station 38
Augusta, Maine 04333
207-287- 1009

Maine Department of Marine Resources
(For Aquaculture Leases)
McKown Point
Boothbay Harbor, Maine 04575
207-633-9500

(For Submerged Lands Leases)
Maine Department of Conservation
Bureau of Parks and Lands
22 State House Station
207-287-3061

A. INLAND WETLANDS (WATERS OF THE U.S.)[1]	CATEGORY I	CATEGORY II	INDIVIDUAL PERMIT
(a) NEW FILL/ EXCAVATION DISCHARGES	Less than 4,300 sf inland waterway and /or wetland fill and secondary impacts (e.g., areas drained, flooded or cleared). -- Includes projects covered by a State Tier One permit with no cumulative impacts over 15,000 sf in inland wetlands from previous permits, unauthorized work, and/or other state permits. -- Includes crossing of perennial waterways designated as Essential Fish Habitat (EFH) for Atlantic salmon[2] if the waterway is crossed with a span and footprints of the span abutments are outside ordinary high water with no more than 4,300 sf of associated wetland impact. -- Includes in-stream work of up to 4,300 sf of fill below ordinary high water in waterways not designated as EFH for Atlantic salmon[2] and performed in accordance with Maine Permit By Rule standards or a LURC permit.	4,300 sf to 3 acres inland waterway and/or wetland fill and secondary impacts (e.g., areas drained, flooded or cleared). -- Impact area includes all temporary and permanent fill and excavation discharges except for incidental fallback. -- Includes in-stream work, including crossings (other than a spanned crossing as described in Category I) with any discharge of fill below ordinary high water in perennial waterways designated as EFH for Atlantic salmon[2]. -- Time of year restrictions determined case-by-case.	Greater than 3 acres inland waterway and/or wetland fill and secondary impacts (e.g., areas drained, flooded or cleared). -- Impact area includes all temporary and permanent fill and excavation discharges except for incidental fallback[3]. In-stream work exceeding Category II limits. If EIS required by the Corps.

[1] Water of the U.S. in inland areas: inland rivers, streams, lakes, ponds and wetlands.
[2] Essential Fish Habitat for Atlantic salmon includes all aquatic habitats in the watersheds of the following rivers and streams, including all tributaries to the extent that they are currently or were historically accessible for salmon migration: St. Croix, Boyden, Dennys, Hobart Stream, Aroostook, East Machias, Machias, Pleasant, Narraguagus, Tunk stream, Patten Stream, Orland, Penobscot, Passagassawaukeag, Union, Ducktrap, Sheepscot, Kennebec, Androscoggin, Presumpscot and Saco River.
[3] The larger the impacts, the more likely an individual permit will be required. Projects involving widening, expansion or impacts to degraded or low value wetlands between 1-3 acres may be approved under Category II, subject to the Federal screening. The Corps recognizes and endorses the DEP Tier 2 upper thresholds of 1 acre. Compensatory mitigation is likely to be required at this level of impact.

	CATEGORY I	CATEGORY II	INDIVIDUAL PERMIT
(a) NEW FILL/ EXCAVATION DISCHARGES	-- Impact area includes all temporary and permanent fill and excavation discharges except for incidental fallback. -- In-stream work limited to July 15 - Oct. 1. -- This category excludes situations when a vernal pool of any size may be impacted, in accordance with the ME DEP definition of vernal pool[4]. -- This category excludes work within ¼ mile or a Wild and Scenic River[5]. -- This category excludes dams, dikes, or activities involving water withdrawal or water diversion. -- This category excludes work in National Wildlife Refuges.	Proactive restoration projects with any amount of impact can be reviewed under Category II. The Corps, in consultation with State and Federal agencies, must determine that net adverse effects are not more than minimal.	
(b) BANK STABILIZATION PROJECTS	Inland bank stabilization less than 500 ft. long and less than 1 cy fill per linear foot below ordinary high water in ponds, lakes, and waterway not designated as EFH for Atlantic salmon[2], provided there is no wetland fill. -- In-stream work limited to July 15 - Oct. 1.	Inland bank stabilization in ponds, lakes, and waterways not designated as EFH for Atlantic salmon[2] which exceeds Category I limits. Inland bank stabilization of any size below ordinary high water in waterways designed as EFH for Atlantic salmon[2]. -- Other stabilization exceeding Category I.	
(C) REPAIR AND MAINTENANCE OF AUTHORIZED FILLS	Repair or maintenance of existing, currently serviceable, authorized fills with no substantial expansion or change in use.	Replacement of non-serviceable fills, or repair or maintenance of serviceable fills with expansion of any amount up to 1 acre, or with a change in use.	Replacement of non-serviceable fills, or repair or maintenance of serviceable fills with greater than 1 acre of expansion.

[4] Vernal Pool: Naturally-occurring, or intentionally created for the purposes of compensatory mitigation, temporary to permanent bodies of water occurring in shallow depressions that fill during the spring and fall and may dry during the summer. Vernal pools have no permanent or viable populations of predatory fish. Vernal pools provide the primary breeding habitat for wood frogs, spotted salamanders, blue-spotted salamanders, and fairy shrimp, and provide habitat for other wildlife including several endangered and threatened species.

[5] National Wild/Scenic Rivers System (Designated River in Maine): Allagash River beginning at Telos Dam continuing to Allagash checkpoint at Eliza Hole Rapids, approximately 3 miles upstream of the confluence with the St. John River. Length = 92 miles.

4 5 6 7 8 ?

B. TIDAL WATERS AND NAVIGABLE WATERS[6]	CATEGORY I	CATEGORY II	INDIVIDUAL PERMIT
(a) FILL		Up to 1 acre waterway or wetland fill and secondary impacts (e.g., areas drained, flooded or cleared). Includes temporary and permanent waterway fill. -- Temporary tidal marsh impacts up to 1 acre. -- Permanent tidal marsh, mudflat, or vegetated shallows[7] fill up to 1,000 sf. -- Proactive restoration projects with any amount of impact can be reviewed under Cat. II. The Corps, in consultation with State and Federal agencies, must determine that net adverse effects are not more than minimal.	Greater than 1 acre waterway fill and secondary impacts (e.g., areas drained, flooded or cleared). Includes -- Temporary tidal marsh impacts over 1 acre. -- Permanent tidal marsh, mudflat, or vegetated shallows[7] fill over 1,000 sf.
(b) REPAIR AND MAINTENANCE WORK	Repair or maintenance of existing, currently serviceable, authorized structure or fills with no substantial expansion or change in use. -- Work must be in same footprint as original structure or fill	Repair or replacement of any non-serviceable structures or fill, or repair or maintenance of serviceable fills with expansion of any amount up to 1 acre, or with a change in use.	Replacement of non-serviceable structures or fill or repair or maintenance of serviceable structure or fill with expansion greater than 1 acre.

6 Navigable Waters: waters that are subject to the ebb and flow of the tide and Federally designated navigable waters (Penobscott River to Medway, Kennebec River to Moosehead Lake, and the portion of Umbagog Lake in Maine).

7 Vegetated Shallows: subtidal areas that support rooted aquatic vegetation such as eelgrass.

	CATEGORY I	CATEGORY II	INDIVIDUAL PERMIT
(c) DREDGING	Maintenance dredging of less than 1,000 cy with upland disposal. -- Proper siltation controls used -- Limited to work between November 1 and January 15. -- No impact to special aquatic sites8	Maintenance dredging of greater than 1,000 cy, new dredging of up to 25,000 cy, or projects that do not meet Category I. Disposal includes upland, open water or beach nourishment (above mean high water), only if material is determined suitable.	Maintenance dredging (any amount) in or affecting special aquatic sites7. See B(a) above for dredge disposal in wetlands or water. New dredging greater than 25,000 cy or any amount in or affecting special aquatic sites7.
(d) MOORINGS	-- Private, non-commercial, non-rental single boat moorings not associated with any boating facility? provided not located in a Federal Navigation Project, there is no interference with navigation, it is not located in vegetated shallows6, and it is within ¼ mile of the owner's residence or a public access point[10]. -- Minor relocation or previously authorized mooring and moored floats consistent with Harbormaster recommendations, provided it is also consistent with local regulations, is not located in vegetated shallows, and does not interfere with navigation.	Moorings that do not meet the terms of Category I (e.g., rental or service moorings) and moorings that meet the terms of Category I that are located in a Federal anchorage.	Moorings within the horizontal limits, or with moored vessels that extend, into the horizontal limits of a Federal Navigation Project, except those in Federal anchorages under Category II.

8 Special Aquatic Sites: include wetlands and salt marsh, mudflats, riffles and pools, and vegetated shallows.

? Boating Facilities: facilities that provide, rent, or sell mooring space, such as marinas, yacht, clubs, boat clubs, boat yards, town facilities, dockominiums, etc.

[10] Cannot be at a remote location to create a convenient transient anchorage.

	CATEGORY I	CATEGORY II	INDIVIDUAL PERMIT
(e) PILE-SUPPORTED STRUCTURES AND FLOATS	Reconfiguration of existing authorized docks, provided structures are not positioned over vegetated shallows[6] or salt marsh and provided floats are supported off substrate at low tide. No dredging, addition slips or expansion allowed.	Private piers and floats for navigational access to waterway (seasonal and permanent).	Structures, piers or floats that extend, or with docked/moored vessels that extend, into the horizontal limits of a Federal Navigation Project. Structures, including piers and floats, associated with a new or previously unauthorized boating facility[8].
(f) MISCELLANEOUS	-- Temporary buoys, markers, floats, etc., for recreational use during specific events, provided they are removed within 30 days after use is discontinued. -- Coast Guard approved aids to navigation. -- Oil spill clean-up temporary structures or fill. -- Fish/wildlife harvesting structures/fill (as defined by 33 CFR 330, App. A-4) -- Scientific measurement devices and survey activities such as exploratory drilling, surveying or sampling. -- Shellfish seeding (brushing the flats) projects[11]. -- Does not include oil or gas exploration and fills for roads or construction pads. -- This category excludes work in National Wildlife Refuges.	-- Structures or work in or affecting tidal or navigable waters that are not defined under any or the previous headings. Includes, but is not limited to, utility lines, aerial transmission lines, pipelines, outfalls, boat ramps, bridge fills/abutments, etc. -- Shellfish/finfish (other than Atlantic salmon), or other aquaculture facilities which are consistent with the Corps revised standard siting requirements and standard permit conditions dated 7/6/94, or as revised.	If EIS required by Corps.

[11] Brushing the flats: the placement of tree boughs, wooden lath structures, or small-mesh fencing on mudflats for the purpose of enhancing recruitment of soft-shell clams (Mya arenaria).