Appendix N

Protecting your property from flooding: Anchoring Heating Oil/Propane Tanks (FEMA 481- DVD Video)

Anchoring Home Fuel Tanks

A Presentation of FEMA's Mitigation Division

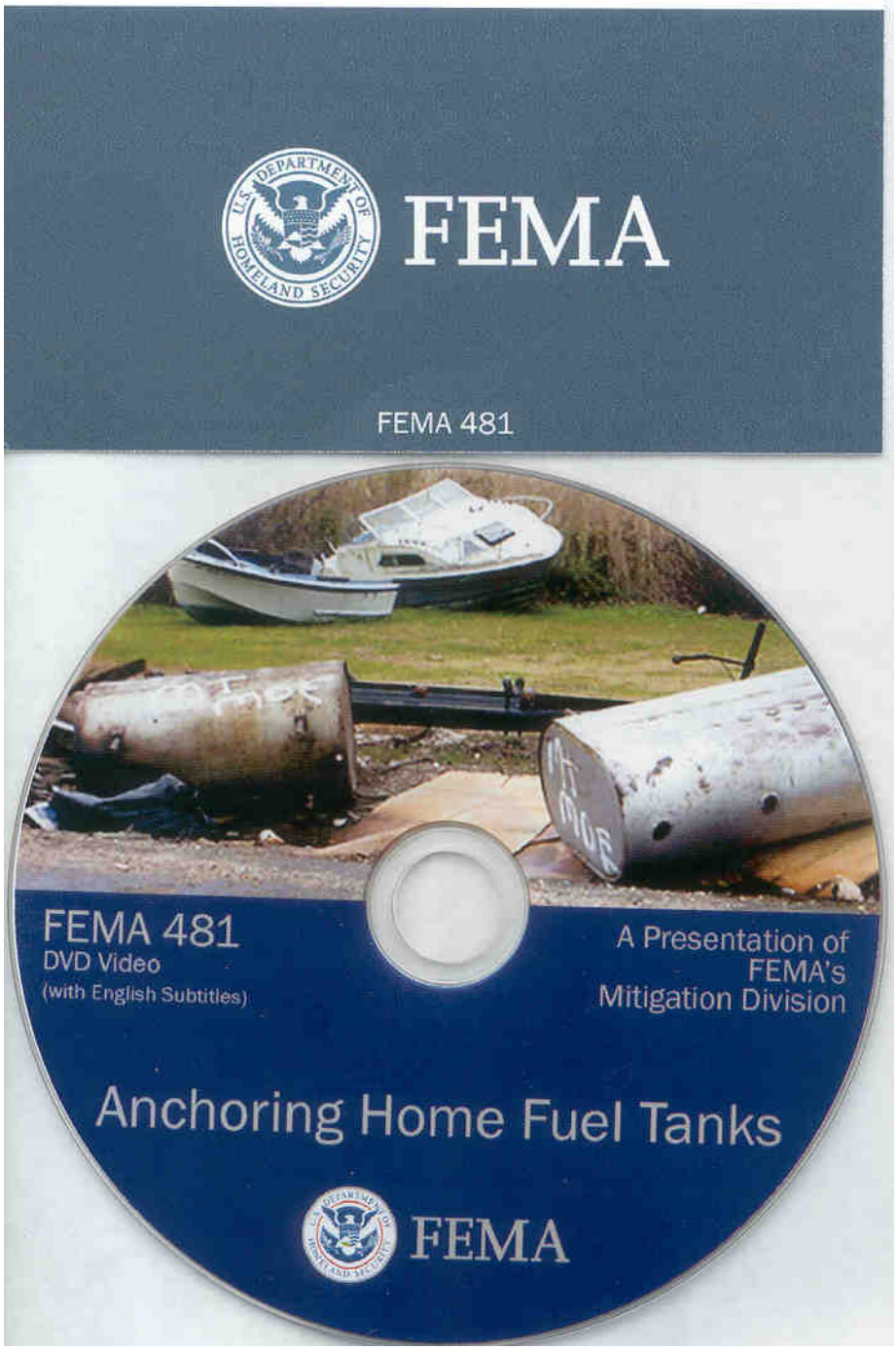

Protecting Your Property From Flooding

FEMA

Are You at Risk?

If you aren't sure whether your house is at risk from flooding, check with your local floodplain manager, building official, city engineer, or planning and zoning administrator. They can tell you whether you are in a flood hazard area. Also, they usually can tell you how to protect yourself and your house and property from flooding.

What You Can Do

Flood protection can involve a variety of changes to your house and property – changes that can vary in complexity and cost. You may be able to make some types of changes yourself; however, complicated or large-scale changes and those that affect the structure of your house or its electrical wiring and plumbing should be carried out only by a professional contractor licensed to work in your state, county, or city. One example of flood protection is anchoring fuel tanks. This is something that skilled homeowners can probably do on their own.

Anchor Outside Heating Oil Tanks

Unanchored heating oil tanks can be easily moved by flood waters. These tanks pose serious threats not only to you, your family, and your house, but also to public safety and the environment. An unanchored tank outside your house can be driven into your walls by flood waters, and it can be swept downstream, where it can damage other houses. As shown in the figure, one way to anchor an outside fuel tank is to secure it by running straps over it and attaching them to ground anchors. The ground anchors and straps described below are the same products that are required by building codes to tie-down mobile homes. These products are available from suppliers and installers that service the manufactured housing industry.

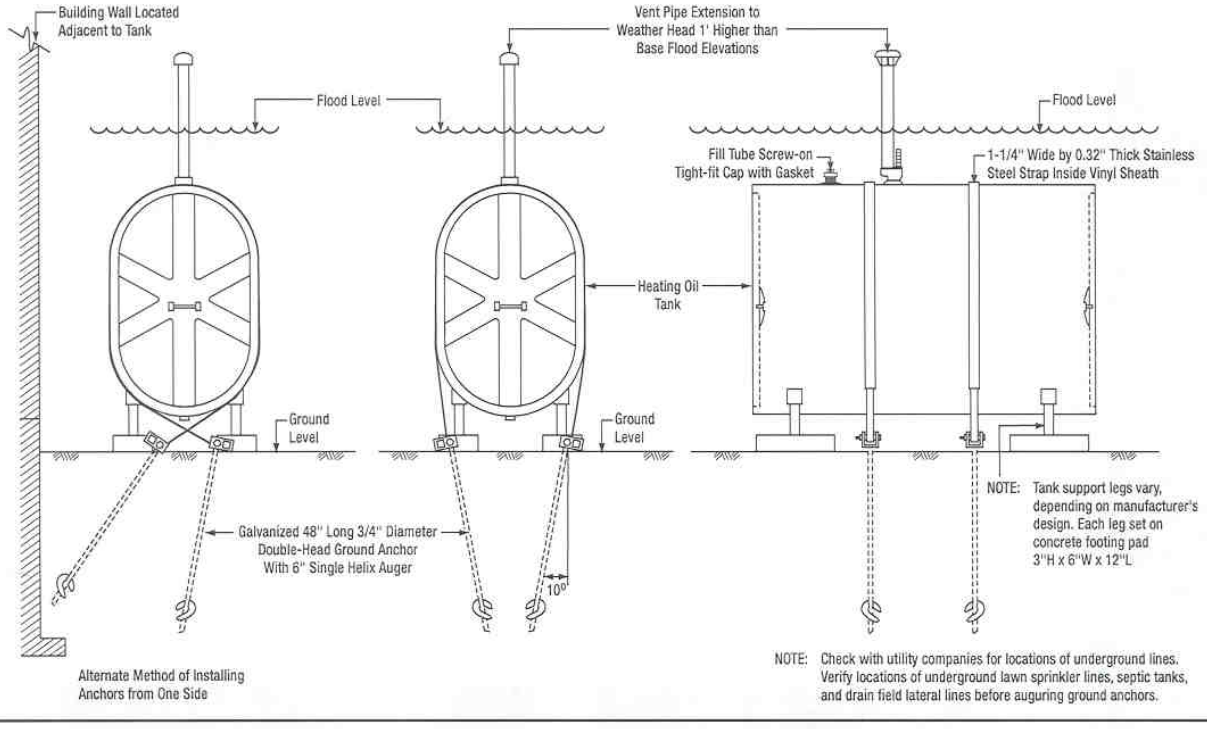

Protecting Your Property From Flooding

FEMA

Are You at Risk?

If you aren't sure whether your house is at risk from flooding, check with your local floodplain manager, building official, city engineer, or planning and zoning administrator. They can tell you whether you are in a flood hazard area. Also, they usually can tell you how to protect yourself and your house and property from flooding.

What You Can Do

Flood protection can involve a variety of changes to your house and property – changes that can vary in complexity and cost. You may be able to make some types of changes yourself; however, complicated or large-scale changes and those that affect the structure of your house or its electrical wiring and plumbing should be carried out only by a professional contractor licensed to work in your state, county, or city. One example of flood protection is anchoring propane tanks. This is something that skilled homeowners can probably do on their own.

Anchor Outside Propane Tanks
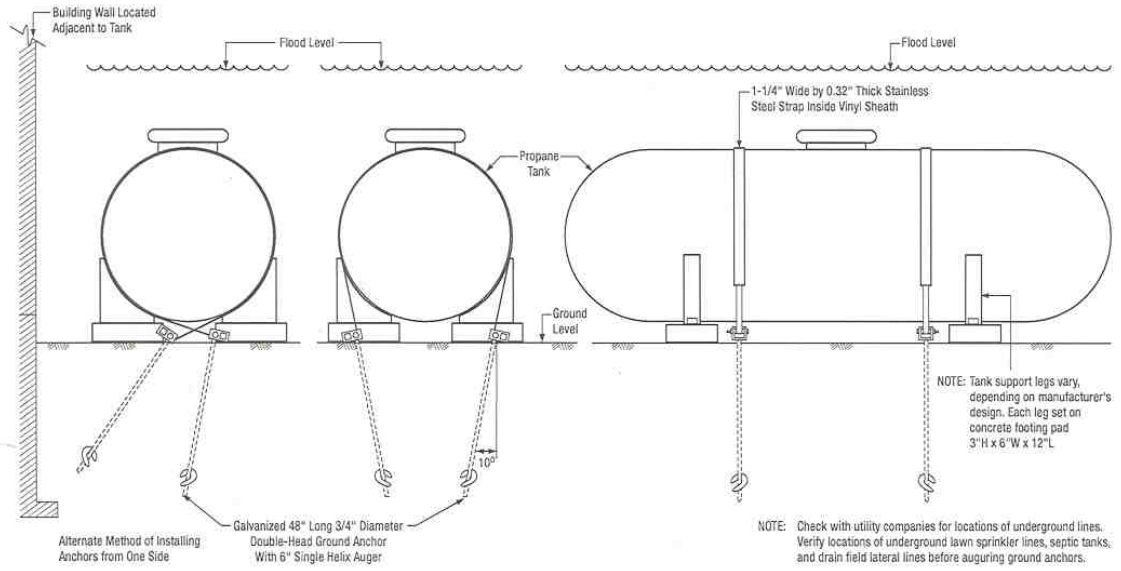
Unanchored propane tanks can be easily moved by flood waters. These tanks pose serious threats not only to you, your family, and your house, but also to public safety and the environment. Propane is stored in pressurized vessels as liquefied petroleum gas (LPG), which can be extremely volatile and potentially explosive if the tank is ruptured and the escaping LPG is ignited by a spark. An unanchored tank outside your house can be driven into your walls by flood waters, or can be swept downstream, where it can damage other houses. As shown in the figure, an inexpensive way to secure a horizontal outside propane tank is to install four ground anchors connected across the top of the tank with metal straps. Secure vertical tank (120-gallon, 420 lb. size) with two ground anchors. Set each anchor on opposite sides of vertical tank. Attach strap from each anchor to collar secured around top of tank. Attach another metal strap connected from one anchor to the other through tank base. The ground anchors and straps described below are the same products that are required by building codes to tie down mobile homes. These products are available from suppliers and installers that service the manufactured housing industry.