INSPECTION REPORT
for
Sarah Mildred Long Bridge
over Piscataqua River

PIN 16710.00

December 30, 2011

Prepared for:

Maine Department of Transportation

by:

HNTB

Volume 1 of 2

TABLE OF CONTENTS

VOLUME 1 OF 2	PAGE
Structural Inspection	
Inspection Field Report Summary	1-2
Inspection Findings	3-18
Location Map	19
Truss Span Elevation & Numbering System	20
Truss Span Cross Section	21
Truss Span Floor System & Framing Plan	22
Lift Span Tower Elevation	23
Condition Assessment Sketches	24-46
Photos	47-131

VOLUME 2 OF 2	PAGE
Ancillary Inspection	
Mechanical Inspection	1-21
Electrical Inspection	22-37
Building Structures Inspection	38-57
Railroad Inspection	58-69
Ultrasonic Testing of the Lift Span Hanger Pins	Appendix A
Underwater Inspection	Appendix B

MAINE DEPARTMENT OF TRANSPORTATION
STRUCTURES INSPECTION FIELD REPORT
ROUTINE INSPECTION
HNTB

2 - DIST	B.I.N.	BR. DEPT. NO.

CITY/TOWN	8 - STRUCTURE NO.	11-MILE POINT	41 - STATUS	90 - ROUTINE INSP DATE
Portsmouth, NH / Kittery, ME	3641 (ME) / 251/108 (NH)		Posted	10/11/11 - 12/14/11

07 - FACILITY CARRIED	MEMORIAL NAME / LOCAL NAME	27 - YR BUILT	106 - YR REBUILT	YR REHAB'D (NON 106)
US 1 BYPASS	Sarah Mildred Long	1940		1987

06 - FEATURES INTERSECTED	26 - FUNCTIONAL CLASS.	DOT BRIDGE INSPECTION ENGINEER
Piscataqua River & Pan Am RR	12-Urban Expressway	

43 - STRUCTURE TYPE	22 - OWNER	21 - MAINTAINER	TEAM LEADER	PROJECT MANAGER
Steel Movable – Vertical Lift	31-DOT	31-DOT	P. Keeping, P.E.	D. Ettinger, P.E.

107 - DECK TYPE	WEATHER	TEMP. (air)	TEAM MEMBERS
Concrete; Cast-in-Place	Variable	45°F	B. D'Artista, M. Fasano, M. McNary, J. Carney, D. Barrett

ITEM 58 — 4

DECK		DEF
1. Wearing surface	5	M-P
2. Deck Condition	4	S-P
3. Stay in place forms	4	S-P
4. Curbs	3	S-P
5. Median	N	
6. Safetywalks	4	S-P
7. Parapets	N	
8. Railing	3	C-H-A
9. Anti Missile Fence	N	
10. Drainage System	3	S-P
11. Lighting Standards	5	M-P
12. Utilities	6	M-P
13. Deck Joints	4	S-P
14. Warning Gates	4	S-P
15. Control House Framing	4	S-P
16. Access Stairs	4	S-P

Curb Reveal (Min) (In Inches)	N/E	S/W
	N/A	N/A

APPROACHES		DEF
a. Appr. pavement condition	N	
b. Appr. Roadway Settlement	N	
c. Appr. Sidewalk Settlement	N	

OVERHEAD SIGNS (Y/N) N
(Attached to bridge)

		DEF
a. Condition of Welds		
b. Condition of Bolts		
c. Condition of Signs		

ITEM 59 — 4

SUPERSTRUCTURE			DEF
1. Stringers		4	S-A
2. Floorbeams		4	S-A
3. Floor System Bracing		4	S-P
4. Girders or Beams		N	
5. Trusses - General		4	
a. Upper Chords	5		M/P
b. Lower Chords	4		S-P
c. Web Members	4		S-P
d. Lateral Bracing	4		S-P
e. Sway Bracing	N		
f. Portals	N		
g. End Posts	N		
6. Pin & Hangers		6	M/P
7. Conn Plt's, Gussets & Angles		4	S-P
8. Cover Plates		N	
9. Bearing Devices		5	M/P
10. Diaphragms/Cross Frames		5	S-P
11. Rivets & Bolts		4	S-P
12. Welds		N	
13. Member Alignment		6	M/P
14. Paint /Coating		4	S/P
15.			
Year Painted:		X	

COLLISION DAMAGE: *Please Explain*
None (☐) Minor (☐) Moderate (☒) Severe(☐)

LOAD DEFLECTION: *Please Explain*
None (☐) Minor (☒) Moderate (☐) Severe(☐)

LOAD VIBRATION: *Please Explain*
None (☐) Minor (☒) Moderate (☐) Severe(☐)

Any Fracture Critical Member : (Y/N) Y

Any Cracks: (Y/N) N

ITEM 60 — 4

SUBSTRUCTURE	Dive Rpt.	This Rpt.		DEF
1. Abutments			N	
a. Pedestals	N	N		
b. Bridge Seats	N	N		
c. Backwalls	N	N		
d. Breastwalls	N	N		
e. Wingwalls	N	N		
f. Slope Pavings/Rip-Rap	N	N		
g. Pointing	N	N		
h. Footings	N	N		
i. Piles	N	N		
j. Scour	N	N		
k. Settlement	N	N		
l.				
m.				
2. Piers or Bents			4	
a. Pedestals	N	5		M-P
b. Caps	N	4		S-P
c. Columns	N	N		
d. Stems/Webs/Pierwalls	N	6		M-P
e. Pointing	N	6		M-P
f. Footing	N	H		
g. Piles	N	H		
h. Scour	N	H		
i. Settlement	N	8		
j. Lift Span Towers	N	5		S/P
k Tower Lateral Bracing	N	5		M/P
3. Pile Bents			N	
a. Pile Caps	N	N		
b. Piles	N	N		
c. Diagonal Bracing	N	N		
d. Horizontal Bracing	N	N		
e. Fasteners	N	N		

UNDERMINING (Y/N): *if YES please explain* N

COLLISION DAMAGE
None (☒) Minor (☐) Moderate (☐) Severe(☐)

I-60 (Dive Report): N ***I-60 (This Report):*** 4

93b-U/W (DIVE) INSP DATE:

X = UNKNOWN N = NOT APPLICABLE H = HIDDEN / INACCESSIBLE R = REMOVED

City/Town	B.I.N.	Br. Dept. No.	8 - Structure No.	90 - Inspection Date
Portsmouth, NH / Kittery, ME			**3641 (ME) / 251/108 (NH)**	**10/11/11 - 12/14/11**

ITEM 61

N

CHANNEL & CHANNEL PROTECTION	Dive Rpt.	This Rpt.	DEF
1. Channel Scour	N	N	
2. Embankment Erosion	N	N	
3. Debris	N	N	
4. Vegetation	N	N	
5. Utilities	N	N	
6. Rip-Rap/Slope Protection	N	N	
7. Aggradation	N	N	
8. Fender System	N	N	

STREAM FLOW VELOCITY:

Tidal (☒) High (☒) Moderate (☐) Low (☐)

I-61 (Dive Report): ☐ *I-61 (This Report):* N

93b-U/W INSP. DATE:

ITEM 36 *TRAFFIC SAFETY*

	36	COND	DEF
1. Bridge Railing	0	3	C-H-A
2. Transitions	N	N	
3. Approach Guardrail	N	N	
4. Approach Guardrail Ends	N	N	

WEIGHT POSTING: *Not Applicable* ☐

	H	3	3S2	SINGLE
Actual Posting				20
Recommended Posting				20

Waived Date: **EJDMT Date:**

	At bridge N/E	At bridge S/W	Other Advance N/E	Other Advance S/W
Signs in Place (Y=Yes N=No)	Y	Y		
Legibility/ Visibility	7 / 7	7 / 7		

CLEARANCE POSTING: N/E S/W

Not Applicable ☒

	ft	in	ft	in	meter
Actual Field Measurement					
Posted Clearance					

	At bridge N/E	At bridge S/W	Advance N/E	Advance S/W
Signs in Place (Y=Yes N=No)				
Legibility/ Visibilitily				

ACCESSIBILITY: (Y/N/P)

	Needed	Used
Lift Bucket Rail	Y	Y
Ladder	Y	Y
Boat	Y	Y
Wader	N	N
Snooper	N	N
Rigging(Tower)	Y	Y
Staging	N	N
Traffic Control	Y	Y
RR Flagger	Y	Y
Police / Flagger	Y	Y
Other:	N	N
Barge w/Manlift	Y	Y

TOTAL HOURS:

PLANS: (Y/N) Y

(V.C.R.): (Y/N) N

TAPE #:

List of Field Tests Performed:

D-Meter, UT Hanger Pins

RATING:

Rating Report (Y/N): Y

Date: 12/09

(To be filed out by DBIE)

Request for Rating or Rerating (Y/N): ☐

If YES please give priority: HIGH (☐) MEDIUM (☐) LOW (☐)

Reason:

CONDITION RATING GUIDE (for Items 58, 59, 60)

	CODE	CONDITION	DEFECTS
	N	Not Applicable	
G	9	Excellent	Excellent condition.
G	8	Very Good	No problem noted.
G	7	Good	Some minor problems.
F	6	Satisfactory	Structural elements show some minor deterioration.
F	5	Fair	All primary structural elements are sound but may have minor section loss, cracking, spalling or scour.
P	4	Poor	Advance section loss, deterioration, spalling or scour.
P	3	Serious	Loss of section, deterioration, spalling or scour have seriously affected primary structural components. Local failures are possible. Fatigue cracks in steel or sheer cracks in concrete may be present.
C	2	Critical	Advance deterioration of primary structural elements. Fatigue cracks in steel or shear cracks in concrete may be present or scour may have removed substructure support. Unless closely monitored it may be necessary to close the bridge until corrective action is taken.
C	1	"Imminent" Failure	Major deterioration or section loss present in critical structural components or obvious vertical or horizontal movement affecting structure stability. Bridge is closed to traffic but corrective action may put it back in light service.
	0	Failed	Out of service - beyond corrective action.

DEFICIENCY REPORTING GUIDE

DEFICIENCY: A defect in a structure that requires corrective action

CATEGORIES OF DEFICIENCIES:

M= Minor Deficiency - Deficiencies which are minor in nature, generally do not impact the structural integrity of the bridge and could easily be repaired. Examples include but are not limited to: Spalled concrete, Minor pot holes, Minor corrosion to steel, Minor scouring, Clogged drainage, etc.

S= Severe/Major Deficiency - Deficiencies which are more extensive in nature and need more planning and effort to repair. Examples include but are not limited to: Moderate to major deterioration in concrete, Exposed and corroding rebars, Considerable settlement, Considerable scouring or undermining, Moderate to extensive corrosion to structural steel with measurable loss of section, etc.

C-S= Critical-Structural Deficiency - A deficiency in a structural element of a bridge that poses an extreme unsafe condition due to the failure or imminent failure of the element which will affect the structural integrity of the bridge.

C-H= Critical-Hazard Deficiency - A deficiency in a component or element of a bridge that poses an extreme hazard or unsafe condition to the public, but does not impair the structural integrity of the bridge. Examples included but are not limited to: Loose concrete hanging down over traffice or pedestrians, A hole in a sidewalk that may cause injuries to pedestrians, Missing section of bridge railing, etc.

URGENCY OF REPAIR:

I= Immediate - [Inspector(s) contact District Bridge Inspection Engineer (DBIE) to report the Deficiency and to receive further instruction from him/her].

A= As soon as possible - [Action/Repair should be initiated by District Maintenance Engineer or the Responsible Party (if not a State owned bridge) upon receipt of the Inspection Report].

P= Prioritize - [Shall be prioritized by District Maintenance Engineer or the Responsible Party (if not a State owned bridge) and repairs made when funds and/or manpower is available].

City/Town	B.I.N.	Br. Dept. No.	8 - Structure No.	90 - Inspection Date
Portsmouth / Kittery			**3641 (ME) / 251/108 (NH)**	**10/11/11 - 12/14/11**

Remarks

BRIDGE ORIENTATION

The Sarah Mildred Long Bridge (New Hampshire Bridge Number 251/108, Maine Bridge Number 3641) is a double deck movable structure spanning over the Piscataqua River between the City of Portsmouth, New Hampshire and the Town of Kittery, Maine **(see sketch 1 and photo 1)**. The upper deck carries the Route 1 Bypass **(see photo 2)** and the lower deck carries Pan Am railroad tracks **(see photo 3)**. The Sarah Mildred Long Bridge contains five main truss spans, one of which is a vertical lift span (truss span 3) **(see photo 4)**. There are fifteen roadway approach spans on the Portsmouth side and seven roadway approach spans on the Kittery side. The Portsmouth approach spans pass over Market Street and the Pan Am railroad tracks. The Kittery approach spans cross over Old Post Road.

The five main spans are Warren type steel deck trusses symmetrical about midspan of each span **(see sketch 2 and photo 5)**. The truss chords are comprised of built-up riveted steel box sections. The truss web members consist of built-up riveted steel box and I-shape sections.

The upper (roadway) floor system of the truss spans is comprised of built-up riveted steel floorbeams, rolled steel stringers and a reinforced concrete deck **(see sketches 3 & 4 and photo 6)**. The lower (railroad) floor system of the truss spans consists of built-up riveted steel floorbeams, rolled steel stringers and a timber tie open deck **(see sketches 3 & 4 and photo 3)**.

The substructure supporting the truss spans are reinforced concrete pierwalls with a granite facade and a reinforced concrete cap **(see photo 8)**. The lift span is operated by a control house (at the roadway level on truss span 2) and built-up riveted steel lift towers (piers 17 and 18) **(see sketch 5 and photo 4)**.

This bridge is oriented from the south to the north. The truss spans are designated as truss span 1 through 5 from the south to the north **(see sketch 2)**. The panel points and floorbeams are numbered 0 to 8 from the south to the north **(see sketches 2 & 4)**. The trusses and stringers are designated as west or east. The piers for the truss spans are labeled as piers 15 to 20 from the south to the north. The lift span towers and associated framing elements are designated as south (pier 17) and north (pier 18). The nomenclature used for this report corresponds to the original design plans and the previous inspection reports.

GENERAL REMARKS

The focus of this inspection was limited to the five truss spans, and the supporting piers, which have been identified to be rehabilitated **(see sketch 2)**. The inspection of the approach spans was performed by others and is not contained within this the scope of this inspection and report. Additionally, the portion of the piers from the mud line up to the high water elevation was inspected by divers and phased array ultrasonic testing was performed on the lift span hanger pins.

Weight Posting:

This structure has a 20 ton weight posting. There is a weight posting sign on each approach for this bridge **(see photo 9)**.

ITEM 58 - DECK

Item 58.1 - Wearing Surface

The concrete overlay wearing surface of the truss spans exhibits isolated locations of up to 1/8" wide transverse cracks by up to the full deck width **(see photo 10)**. There are numerous delaminated areas in the wearing surface throughout.

The wearing surface adjacent to pier 15 deck joint in truss span 1 **(see photo 11)** and the pier 20 deck joint in truss span 5 exhibits up to 6" long by full width by up to 1/2" deep spalling.

There are numerous concrete repairs to the wearing surface/top of deck throughout **(see photo 12)**. The concrete repairs vary in size and exhibit 1/16" transverse/map cracking. Isolated concrete repairs are depressed 1/2". There is minor unraveling along the edges of the concrete repairs.

The transverse traction grooves exhibit heavy wear, particularly along the wheel lines.

At the time of this inspection, ponding water was observed along the east shoulder in truss spans 1 and 5 **(see photo 13)**.

City/Town	B.I.N.	Br. Dept. No.	8 - Structure No.	90 - Inspection Date
Portsmouth / Kittery			**3641 (ME) / 251/108 (NH)**	**10/11/11 - 12/14/11**

Remarks

Item 58.2 - Deck Condition

Roadway Deck:

There are numerous concrete repairs to the wearing surface/top of deck throughout. The concrete repairs exhibit transverse and map cracking, and unraveling along the edges. Refer to Item 58.1 for additional comments.

The underside of the reinforced concrete deck typically exhibits hairline longitudinal and transverse cracking, delaminated areas and spalls with exposed reinforcement **(see photo 14)**. There is a 4'-0" long by 2'-2" wide by 2 1/4" deep spall with exposed reinforcement and surrounding 4'-0" long by 10" wide delamination between the east truss and east roadway stringer in bay 4 of truss span 5 **(see photo 15)**

The deck (non-composite) is not directly bearing on the top flange of the upper chords, floorbeams and stringers in numerous locations with gaps ¼ to ½" noted **(see photos 16 & 17)**.

Railroad Deck:

The timber deck ties for the railroad deck exhibits checks and through splits throughout **(see photo 18)**. Refer to the Track Inspection Report for additional comments.

Item 58.3 – Stay in Place Forms

The stay-in-place forms under the control house are in poor condition. The stay-in-place forms exhibit heavy rust and moderate section loss **(see photo 19)**. There are isolated areas of 100% section loss to the stay-in-place forms.

Item 58.4 – Curbs

The safetywalks have a concrete curb face. The concrete curb for the east safetywalk exhibits delaminations and advanced spalling with exposed reinforcement, especially in truss spans 1, 2 and 5. The east concrete curb spalling extends up to 26'-0" long by up to full height by up to 11" deep (across the safetywalk). The following are the most notable locations of east concrete curb spalling:

Truss Span 1, South Half of Span: Half of span length by full height by 6" deep spall with exposed reinforcement.
Truss Span 1, North Quarter of Span: 26'-0" long by full height delamination with 6" deep spalling with exposed reinforcement **(see photo 13)**.
Truss Span 2, South Third Point of Span: 3'-10" long by full height by 3 1/2" deep spall with exposed reinforcement.
Truss Span 2, Midspan: 4'-2" long by full height by 7 1/2" deep spall with exposed reinforcement.
Truss Span 2, North Third of Span: 11'-0" long by full height delamination with 2" deep spalling.
Truss Span 5, South Quarter point of Span: 3'-6" long by full height by up to 6" deep spall with exposed reinforcement **(see photo 20)**.
Truss Span 5, North Third Point of Span: 9'-0" long by full height by up to 11" deep spall with exposed reinforcement **(see photo 21)**.

Item 58.6 – Safetywalks

The safetywalks exhibit isolated hairline transverse and longitudinal cracks. The west safetywalk in truss span 1 at the south third point exhibits an 1/8" wide longitudinal crack by 6'-0" long.

The east safetywalk exhibits delaminations and advanced corner spalling at the curb face with exposed reinforcement, especially in truss spans 1, 2 and 5. This spalling extends up to 26'-0" long by up to full curb height by up to 11" wide. Refer to Item 58.4 for additional comments.

The safetywalks exhibit isolated locations of spalling not at the curb face. The following are the most notable locations of safetywalk spalling not at the curb face:

Truss Span 3, East Safetywalk at the Pier 17 Deck Joint: 19" long by 14" wide by 2" deep spall with exposed reinforcement.
Truss Span 5, West Safetywalk at the Pier 19 Deck Joint: 9" long by full width by 2" deep spall with exposed deck joint armor **(see photo 19)**.
Truss Span 5, West Safetywalk near Pier 19: 12" long by 6" wide by 2" deep spall around a rail post **(see photo 22)**.
Truss Span 5, East Safetywalk near Midspan: 12" long by 4" wide by full depth spall around a rail post.

City/Town	B.I.N.	Br. Dept. No.	8 - Structure No.	90 - Inspection Date
Portsmouth / Kittery			**3641 (ME) / 251/108 (NH)**	**10/11/11 - 12/14/11**

Remarks

Item 58.8 – Railing

The steel bridge railing is in serious condition. The bridge railing exhibits severe deterioration including 100% section loss to the original rail posts and 100% section loss to the pipe rail throughout. A retrofit was performed to the bridge railing consisting of tube steel rub rail bolted to the original rail posts **(see photo 23)**. The original rail posts were reinforced with a W beam which is through bolted to both flanges of the original rail post.

The original rail posts exhibit severe deterioration including 100% section loss by full height to the webs and by full width to the flanges **(see photo 24)**. The through bolts for the W beam retrofit typically occur at locations of 100% section loss to the web and/or severe section loss to the flanges. There are isolated locations of up to 50% section loss to the through bolts **(see photo 25)**.

There are numerous areas of severe deterioration and/or 100% section loss to the top pipe rail by up to full length between posts **(see photo 26)**. The 100% section loss is typically present at the rail posts and at the bottom of the top pipe rail along the picket panels. There is up to 1 1/2" impacted rust between the bottom of the top pipe rail and the top of the picket panels throughout **(see photo 23)**. This impacted rust has caused a separation between the bottom of the top pipe rail and the top of the picket panels in many locations.

The collars at the rail posts are typically non-functional, missing or have cracked welds on both sides of the rail post **(see photo 27)**. Impacted rust is present under the collars and is causing 100% section loss to the pipe rail.

The top of the rail pickets are up to 90% necked downed in isolated locations. There are isolated locations of missing railing pickets. There are two sections of bent pickets for the east bridge railing near pier 19 in truss span 5. The top of the picket panel of the west bridge railing at the control house in truss span 2 exhibits 100% section loss **(see photo 23)**.

Item 58.10 - Drainage System

The rectangular steel scupper downspouts in the truss spans exhibit heavy rust and severe deterioration, including 100% section loss on all sides **(see photo 28)**. The severely deteriorated scupper downspouts allow for water infiltration onto the superstructure below. This water infiltration is causing severe deterioration to the adjacent curb stringer **(see photo 29)**. Refer to Item 59.1 for additional comments.

The scupper grates exhibit heavy rust and minor section loss. The scupper grates are partially clogged with sand and debris in isolated locations.

There are two 3" diameter drain holes in the west shoulder of truss span 2 near the south tower (pier 17).

Item 58.11 – Lighting Standards

The lighting standard cantilever supports exhibit heavy rust and deterioration. The lighting standard cantilever supports are connected to the deteriorated fascia stringers and to the rail post repairs.

There is a missing cap for the southwest anchor bolt of the lighting standard on the east fascia of truss span 1. The anchor bolt at this location exhibits heavy surface rust.

Item 58.12 – Utilities

The steel conduit connected to the rail posts along the west fascia is disconnected from the connection clips at isolated locations **(see photo 30)**.

The conduits connected to the bottom flanges of the roadway floorbeams are in satisfactory condition **(see photo 6)**.

Item 58.13 - Deck Joints

The joint seal at pier 15 is dislodged, torn and filled with sand throughout **(see photo 11)**.

The finger joints at piers 16 and 19 exhibit heavy rust, heavy plow damage and moderate sand and debris accumulation **(see photo 31)**. The majority of the joint fingers are in contact with adjacent fingers. The pier 16 joint fingers in the west shoulder are protruding upward by 3/8" **(see photo 32)**. The pier 19 finger joint exhibits heavy plow damage and welded finger repairs in the southbound lane **(see photo 31)**.

City/Town	B.I.N.	Br. Dept. No.	8 - Structure No.	90 - Inspection Date
Portsmouth / Kittery			**3641 (ME) / 251/108 (NH)**	**10/11/11 - 12/14/11**

Remarks

The sliding plates in both safetywalks for the pier 16 deck joint exhibit heavy rust and 100% section loss by up to 3 1/2" long by 1 1/2" wide **(see photo 33)**.

The deck joints at the tower piers (17 and 18) exhibit minor plow damage. The pier 17 deck joint in the east safetywalk exhibits a 1 1/2" downward rotation **(see photo 34)**. There is a bend in the pier 17 deck joint armor in the west safetywalk.
The neoprene joint seals near the tower piers in truss spans 2 and 4 are torn and protruding upwards **(see photo 35)**.

Item 58.14 – Warning Gates Framing
The warning gate platforms exhibit heavy rust and deterioration with areas of 100% section loss **(see photo 36)**. There is moderate sand and debris accumulation on the warning gate platforms.

There is heavy rust to the seat angle for the aluminum grating of the warning gate platform on the east fascia of truss span 2.

The support beam cross beam for the warning gate platform on the east side of truss span 2 is not flush with the top of the top flange of the floorbeam cantilever. There is impacted rust between the bottom flange of the cross beam and the top flange of the floorbeam cantilever at this location.

The bolts for the warning gate supports and connections to the truss web members exhibit heavy rust.

Item 58.15 – Control House Framing
The control house and ancillary building are located on the west fascia of truss span 2 adjacent to the south tower (pier 17). The open fiberglass grating walkway between the control house and ancillary building, and adjacent to the south side of the ancillary building exhibits isolated locations of disconnected connection clips. The open fiberglass grating between the control house and ancillary building exhibits a repair consisting of a thin plate and tie wire **(see photo 37)**.

The open steel grating walkway behind the control house exhibits heavy rust.

The control house framing exhibits heavy rust and areas of moderate section loss, especially between panel points 7 and 8 **(see photo 38)**. The original floorbeam cantilever above the control house support floorbeam at panel point 6 exhibits a 5/8" high by 1/2" long corrosion hole in the web and 3/8" minimum remaining by full width to the top flange.

The framing between the control house and ancillary building exhibits heavy deterioration. This area is under the open fiberglass grating.
Refer to Item 58.3 for additional comments. Refer to the Architectural Inspection Report for control house facade, roof and interior comments.

Item 58.16 – Access Stairs
There are access stairs along the west fascia of truss span 5to access the retractable span. The access stair system exhibits heavy deterioration including areas of 100% section loss to the support members. There is a 100% section loss by up to 2 1/2" high to the web of the south support channel of the landing platform at mid-height of truss diagonal U7L8 **(see photo 39)**. There is 1 7/16" impacted rust between the channel web and support bracket at this location. The south support channel of the landing platform at mid-height of truss diagonal U7L8 also exhibits 100% section loss by full width to the top flange at midspan **(see photo 40)**. The bottom flange at this location exhibits heavy deterioration and section loss.

The stair side stringers exhibit heavy deterioration including areas of 100% section loss **(see photo 40)**. There is heavy rust to the stair steps.

The handrails for the access stair exhibit areas of heavy deterioration including areas of 100% section loss.

ITEM 59 - SUPERSTRUCTURE

Item 59.1 – Stringers
Railroad Stringers:
The railroad stringers are rolled wide flange sections (33WF210) that span between the floorbeams in truss spans 1 through 5. These members are designated east and west within each span. Due to typical heavy section loss to the top flanges under, and directly adjacent to, the railroad timber ties (closely spaced with 6” clear between ties) throughout their length, the stringers are considered to be in poor condition **(see sketches 6 & 7 and photos 41 through 43)**. There are also random areas of moderate to heavy section loss to the bottom flanges and webs of the railroad stringers **(see sketches 6 & 7 and photo 44)**.

City/Town	B.I.N.	Br. Dept. No.	8 - Structure No.	90 - Inspection Date
Portsmouth / Kittery			**3641 (ME) / 251/108 (NH)**	**10/11/11 - 12/14/11**

Remarks

Often the stringers exhibit intact paint over the majority of their length. However the top flange loss is hidden by the railroad ties and the debris/creosote accumulated on the top surface of the flanges. During this inspection, a track crew from Pan Am was on site for several days to jack up the tracks and laterally shift the timber ties to allow access to the top flanges of selected stringers and floorbeams directly beneath the ties. Once the debris is chipped away the dramatic thinning of the full width of the upper flange becomes evident **(see photo 45)**. Since the ties are so closely spaced, making taking measurements under every tie unfeasible, the assumption must be made that similar losses would be found under other ties throughout the stringers.

The lower lateral braces spanning between truss lower panel points are connected to the bottom flanges of the stringers. At these connections impacted rust and associated moderate section losses to the stringers flanges was observed. These connections typically are located at approximately the quarter points of the stringers.

Several of the stringers framing into end railroad floorbeams (floorbeams 0 and 8) exhibit heavy rust and moderate losses throughout the adjacent quarter-span and to the stringer connections to the floorbeams **(see photo 46)**.

Some of the railroad stringers exhibiting the most severe deterioration include:

Truss Span 1, East Stringer at South Quarter Point in Bay 1: the top and bottom flange on the west side exhibit 28% section loss by full width **(see sketch 6)**.

Truss Span 2, West Stringer at Midspan in Bay 1: the top flange averages 24% section loss by full width and the bottom flange averages 16% section loss by full width **(see sketch 6)**.

Truss Span 2, East Stringer at North Third Point in Bay 8: the top flange averages 33% section loss by full width and the bottom flange averages 18% section loss by full width **(see sketch 7)**.

Truss Span 4, East Stringer at North Quarter Point in Bay 4: the top flange averages 33% section loss by full width and the bottom flange averages 15% section loss by full width **(see sketch 7)**.

Roadway Stringers:
The roadway stringers are in satisfactory condition. The roadway stringers typically exhibit up to 1/16" section loss to the bottom flange by full width.

In truss span 4, both roadway stringers at floorbeam 2 in bay 3 and the east roadway stringer at floorbeam 3 in bay 4 exhibit miscellaneous rivets filling drilled holes in the web **(see photo 47)**.

Curb Stringers:
The curb stringers at the floorbeams exhibit isolated locations of heavy rust and advanced section loss to the web and flanges, including corrosion holes in the webs **(see sketches 8 & 9 and photo 48)**. The east curb stringer at floorbeam 8 of bay 8 in truss span 2 exhibits the most severe condition with 1/8" section loss to the web and 100% section loss by full width to the top flange **(see sketch 8 and photo 49)**.

The curb stringers exhibit advanced section loss to the flanges and lower web at most deteriorated scupper downspout locations **(see photo 14)**. The curb stringers at deteriorated scupper downspout locations exhibit up to 100% section loss to the bottom flange on the scupper side **(see sketch 8 and photo 50)**. These locations are typically at midspan of the bay.

The east curb stringer at midspan of bay 1 in truss span 3 exhibits the most severe bottom flange condition with 100% section loss by full width to the west side of the bottom flange **(see sketch 9 and photo 51)**.

Fascia Stringers:
The fascia stringers are in poor condition throughout. The fascia stringers exhibit advanced section loss to the web and flanges, especially at floorbeam cantilever and bridge rail post locations **(see sketch 10 and photo 52)**. East fascia stringer at floorbeam 5 in bay 5 of truss span 2 exhibits the most severe condition with 100% section loss by half the web height **(see sketch 10 and photo 53)**. There are isolated locations of corrosion holes in the fascia stringer webs at the floorbeam cantilevers and bridge rail posts **(see sketch 10 and photo 54)**.

City/Town	B.I.N.	Br. Dept. No.	8 - Structure No.	90 - Inspection Date
Portsmouth / Kittery			**3641 (ME) / 251/108 (NH)**	**10/11/11 - 12/14/11**

Remarks

Tower Stringers:
The railroad stringers within the framing system of both lift span towers are in serious condition with heavy section loss to the top and bottom flange extending throughout the length of the stringers. The webs of the railroad stringers are in satisfactory condition however with no significant section loss noted. Short sections of HP12x63 steel support columns have been recently installed beneath the bottom flange of each railroad stringer at midspan due to the flange deterioration. The steel columns are shimmed at the top and were all noted to be bearing tightly and appear to be effective however there is no positive connection between the support column and the bottom flange and no means of bracing for the added columns **(see sketches 11 & 12 and photos 55 & 56)**.

There are additional 12" deep stringers on each side of the two railroad stringers at each tower which provide support for a timber access platform. These stringers are also in serious condition with heavy flange section loss and scattered rust holes in the lower webs **(see sketch 13 and photo 57)**.

Item 59.3 - Floor System Bracing
Railroad Stringers Bracing:
The railroad stringer bracing system ties the east and west stringers together in each bay at quarter points of the top flange. The connection (gusset) plates at the top flange of the railroad stringers exhibit large areas of 100% section loss with paper thin areas remaining throughout the truss spans **(see photo 58)**. The back to back angles and their connection plates exhibit severe rust, impacted rust and deterioration. The impacted rust between the back-to-back vertical legs of the bracing angles is up to 1" thick for the full length of the braces which is distorting the legs of the angles **(see photos 59 and 60)**.

Item 59.4 – Floorbeams
Railroad Floorbeams:
The railroad framing floorbeams are built-up riveted members and they are numbered 0 through 8 in truss spans 1 through 5. All railroad floorbeams, except floorbeams 0 and 8 of span 3 (lift span) are built up 'I' shaped sections with top and bottom flange angles riveted to the web plate and they are in poor condition. Floorbeams 0 and 8 of span 3 (lift span) are built-up box shaped sections.

The end floorbeams (floorbeams 0 and 8, except in span 3) and many interior floorbeams exhibit moderate to heavy section loss (a few with corrosion holes) to the top and bottom flanges particularly at, and around, the midspan region (between the railroad stringers) **(see sketches 14 through 16 and photo 61)**. In addition all 'I' shaped railroad floorbeams exhibit two drilled holes on each side of the top flange just adjacent to the midspan of the floorbeams. These unfilled drilled holes vary in diameter from 3/4" to 1". There are occasional small areas of web section loss at the connections to the east and west truss **(see photo 62)**.

Railroad floorbeams 0 and 8 in span 3 (lift span) are built-up box sections that exhibit heavy rust throughout **(see photo 63)**. Beyond the exterior bearings these floorbeams transition into bracing struts that engage the span guides on the lift span towers. These struts, and their associated lateral diagonal braces, exhibit heavy rust and heavy deterioration with 100% loss to numerous lacing bars **(see photos 64 through 66)**.

During the field inspection the railroad floorbeams (as well as the rest of the structure below the roadway) were initially accessed utilizing a manlift on a barge. This provided a thorough hands-on inspection of the bottom flanges and webs of the railroad floorbeams and, because the timber ties supporting the rail were bearing on the top of the floorbeams, a more difficult inspection of the top flanges. At this time ultrasonic d-meter measurements were incorporated to determine the flange thickness remaining at various locations along the underside of the top flanges and straight edges were used to measure local losses just adjacent to the drilled holes. A follow up inspection, where railroad personnel (working atop the track) manually spread the timber ties to expose the top of the top flange of the more severely deteriorated floorbeams, was conducted after the barge inspection **(see sketches 14 through 16 and photos 67 through 69)**. This additional inspection of the top flanges enabled the inspection team to hammer away rust layers and tar debris from the ties and more accurately access the actual top flange section losses.
Some of the railroad floorbeams exhibiting the most severe deterioration include:

Truss Span 1, Floorbeam 0 at Midspan: the top flange averages approximately 53% section loss by full width and the bottom flange averages approximately 37% section loss by full width **(see sketch 14)**.

Truss Span 1, Floorbeam 2 near Midspan: the top flange averages approximately 42% section loss by full width and the bottom flange averages approximately 34% section loss by full width **(see sketch 14)**.

City/Town	B.I.N.	Br. Dept. No.	8 - Structure No.	90 - Inspection Date
Portsmouth / Kittery			**3641 (ME) / 251/108 (NH)**	**10/11/11 - 12/14/11**

Remarks

Truss Span 1, Floorbeam 8 at Midspan: the top flange averages approximately 43% section loss by full width and the bottom flange averages approximately 25% section loss by full width **(see sketch 15)**.

Truss Span 2, Floorbeam 5 near Midspan: the top flange averages approximately 35% section loss by full width and the bottom flange averages approximately 40% section loss by full width **(see sketch 15)**.

Truss Span 4, Floorbeam 0 at Midspan: the top flange averages approximately 45% section loss by full width and the bottom flange averages approximately 34% section loss by full width **(see sketch 16)**.

Truss span 5, floorbeam 0 at Midspan: the top flange averages approximately 57% section loss by full width and the bottom flange averages approximately 29% section loss by full width **(see sketch 16 and photo 69)**.

Roadway Floorbeams:
The roadway end floorbeams (0 and 8) exhibit advanced section loss to the bottom flanges **(see sketch 17 and photo 70)**. Roadway end floorbeam 0 at midspan of truss span 1 exhibits the most severe condition with 100% section loss to the bottom flange by 3" wide **(see sketch 17 and photo 71)**.

The roadway intermediate floorbeams exhibit moderate section loss to the bottom flanges at midspan **(see sketch 17)**.

There is a 1/4" high by 7" long bend in the south bottom flange of floorbeam 4 in truss span 1, 6' from the west end. The north bottom flange of floorbeam 3 in truss span 3 at midspan exhibits a 1/8" high by 5" long bend.

There are 7/8" diameter drilled holes in the bottom flange of the roadway floorbeams approximately 7' from each end **(see sketch 17 and photo 72)**. These drilled holes are apparently for the rods of the abandoned blast plates. The abandoned plate support rods have been torch cut and remain in place in many locations.

The floorbeam knee braces exhibit up to 1/4" impacted rust between the bottom flange and bottom flange connection plate to the truss web member in isolated locations. The floorbeam knee brace bottom flange connection plates exhibit up to 1/8" section loss beyond the knee brace bottom flange in isolated locations.

Roadway floorbeam 0 of truss span 3 is a box shaped member and has 6 consecutive rivets connecting the bottom cover plate to the bottom flange angle at midspan which are ineffective and allowing up to 11/16" separation of the plate **(see photo 74)**. At this location, two rivets are missing and the rivet heads are sheared off at 4 locations. The bottom cover plate has heavy section loss to the outer 6" along the south side where the rivets are ineffective with an average remaining thickness of 3/16" over a 3' length.

Roadway floorbeam 8 of truss span 3 is also a box shaped member and has similarly has several sheared rivet heads along the bottom flange at midspan with up to 1 3/8" impacted rust between the cover plate and lower flange angle **(see photo 75)**. This floorbeam also has significant impact damage along the north face extending from the east roadway stringer to the east truss **(see photo 76)**. At this location the north web and bottom flange angle are bent approximately 2" to the south and the bottom flange angle is bent slightly upwards. According to NH DOT maintenance personnel familiar with the structure, this damage occurred many years ago (circa 1960) when the operator of a delivery truck had a medical emergency and crashed through the gates as the span was in process of being raised.

Refer to Item 59.11 for additional comments.

Roadway Floorbeam Cantilevers:
The roadway floorbeam cantilevers exhibit heavy rust and advanced section loss to the top and bottom flanges **(see sketch 18 and photo 53)**. In truss span 4, roadway floorbeam 0 east cantilever exhibits the most severe condition with 100% section loss to the top flange by up to 1 1/4" wide with paper thin minimum thickness by the remaining width **(see sketch 18 and photo 73)**.

Railroad Tower Floorbeams:
Within the footprint of the four lift span tower legs there are stationary railroad and roadway framing systems that are independent of the lifting span. The floorbeams support the associated stringers (railroad and roadway). There is a north and south tower floorbeam at the north and south towers. These members are built up "hat" sections which are of constant height throughout most of their span. The cross section deepens as the floorbeams frame into the tower columns.

City/Town	B.I.N.	Br. Dept. No.	8 - Structure No.	90 - Inspection Date
Portsmouth / Kittery			**3641 (ME) / 251/108 (NH)**	**10/11/11 - 12/14/11**

Remarks

The lower level floorbeams supporting the railroad typically exhibit heavy pack rust between the lower edge of the web plates and the lower flange angle with distortion noted to the lower web throughout the length of the floorbeams. There is minor to moderate section loss to the top cover plate and outstanding legs of the lower angles **(see sketches 19, 20 & 21 and photos 77 & 78)**. There is heavy section loss to connecting rivets along the top surface of the top cover plate and along the upper and lower edges of the web plate in various locations **(see photos 79 & 80)**.

The upper level floorbeams supporting the roadway deck exhibit areas of heavy rusting and section loss to the webs beneath the curb lines **(see sketches 19, 22 & 23 and photos 80 & 82)**.

Item 59.5 - Trusses – General

Item 59.5.a - Upper Chords

The built up riveted box section upper chords typically exhibit intact paint with no measurable losses. Occasionally, most often in the end bays of the truss spans, there is up to 1 ½" impacted rust between the web plate and the vertical leg of the lower angle for the full length of the member with as little as 1/16" remaining to the web plate by 2" high **(see photos 83 and 84)**.

In some locations impacted rust up to 11/16" thick is evident at the bottom of the east and west web plates within the same cross section and in some locations there is also moderate section loss by 2" high **(see photo 85)**.

Item 59.5.b - Lower Chords

The lower chords typically exhibit isolated areas of light to moderate rust on the top of the top and bottom flanges with minor to moderate section loss to the top flanges at batten plates throughout and are in fair condition**.** Many webs also exhibit up to moderate rust on the exterior faces at a few random locations. The top and bottom batten plates and the lowest row of rivets (interior rivet heads) typically exhibit heavy rust with up to moderate section loss. All surfaces of the lower chords within the limits of the L0 and L8 gusset plates exhibit heavy rust and section loss. There are scattered panel points throughout the structure which exhibit a heavy accumulation of sand and debris.

Numerous lower chord sections exhibit up to heavy rust with moderate section loss on nearly all faces. Some of the most deteriorated lower chord sections are listed below:

Truss Span 1, West Truss, Bay 1 at North Quarter Point: one web plate exhibits 14% section loss and the outstanding leg of the four angles exhibit up to 1/4" loss by 2" wide **(see photo 86)**.

Truss Span 2, West Truss, Bay 1 at Midspan (at a Batten Plate): the east and west web plates exhibit approximately 10% section loss and the outstanding leg of the four angles exhibit up to 1/4" loss by full width **(see sketch 24 and photo 87)**.

Truss Span 2, West Truss, Bay 8 at Panel Point L8 (at a Batten Plate): the west web plate exhibits approximately 17% section loss and the outstanding leg of the four angles exhibit up to 1/8" loss by full width **(see photo 88)**.

Truss Span 3, West Truss, Bays 3 and 4 at Midspan (at a Batten Plate): the west web plate exhibits approximately 10% section loss and the outstanding leg of the four angles exhibit an average of 1/16" loss by full width. There is also impacted rust 5/8" thick between the top of the bottom batten plate and the bottom of the chord.

Truss Span 4, West Truss, Bay 5 at Panel Point L4: the outer west web plate exhibits approximately 24% section loss, this equates to approximately 4% loss over the full cross section **(see sketch 24)**. The west truss lower chord in span 4 in bay 4 at L4, and throughout bay 3, exhibits similar but less severe losses **(see photo 89).**

Truss Span 4, East Truss, Bay 6 at Midspan: the east face of the west web plate (inside face) and the east face of the east web plate exhibit an average of approximately 12% section loss.

Truss Span 4, West Truss, Bay 8 at Panel Point L8: the west face of the west web plate exhibits approximately 20% section loss. In addition two of the four angles have up to 1/4" section loss by up to full width of the 4" outstanding leg **(see sketch 25 & photo 90)**.

City/Town	B.I.N.	Br. Dept. No.	8 - Structure No.	90 - Inspection Date
Portsmouth / Kittery			**3641 (ME) / 251/108 (NH)**	**10/11/11 - 12/14/11**

Remarks

Truss Span 5, West Truss, Bay 4 near Panel Point L4: the west face of the outer west web plate exhibits approximately 9% section loss and the east face of the inner west web plate exhibits 12% section loss. In addition the inside face of the east inner web faces and portions of the bottom outstanding angle legs exhibit up to 3/16" section loss by up to 4" in length **(see sketch 25 & photo 91)**.

Item 59.5.c - Web Members

Truss diagonals are typically in fair condition with paint loss and up to moderate rust at random locations, most often at the lower half of the member. Numerous truss diagonals exhibit heavy rust, heavy losses and impacted rust at lower lacing bars.

Several diagonal member sections exhibit up to moderate rust on nearly all surfaces at, and near, connections to lower chord gusset plates.

Some of the most deteriorated truss diagonals are listed below:

Truss Span 1, West Truss, L4U5 at Lower 3/4 of Member: west face of the west channel exhibits areas with up to 5/16" section loss by 11" high. There are additional 1/4" deep web losses on the inside face of the east channel by 9" high **(see sketch 26 and photos 92 & 93)**.

Truss Span 2, West Truss, L4U5 Throughout: the web of the west channel has an average of 0.388" remaining and the web of the east channel has section loss over full height. In addition the top and bottom flanges of the west channel exhibit 1/4" section loss by up to full width **(see sketch 26 and photo 94)**. L4U3 in span 2 at the west truss exhibits similar but less severe losses at L4**.**

Truss Span 2, West Truss, L0U1 Throughout: both web plates exhibit approximately 10% section loss. All the lacing bars and bottom rows of rivets exhibit heavy rust and section loss **(see photo 95)**.

Truss Span 3, West Truss, L4U3: web areas (east and west web) with up to 1/4" section loss by 6" high near L4 **(see photo 96)**. Member L4U5 exhibits similar losses at both webs.

Truss Span 3, West Truss, L6U7: approximately 13% section loss to the outer face of the west web plate.

Truss Span 4, West Truss, L4U3 at L4: the web of the west channel has losses up to 5/16" deep for a height of 13" at the outside face. In addition 75% of the lacing bars on this member exhibit heavy rust and section loss **(see sketch 27 and photo 97)**.

Truss Span 4, West Truss, L0U1: approximately 5% section loss to both web plates.

Truss Span 4, East Truss, L8U7: approximately 5% section loss to the outer face of the east and west web. Note that approximately 50% of the top lacing bars have heavy section loss.

Truss Span 5, West Truss, L8U7: heavy impacted rust on the top face where it interfaces with framing elements of the access walkway.

Truss verticals web members are typically in fair condition with paint loss and up to moderate rust at random locations, most often the lower half of the member. Numerous truss verticals exhibit heavy rust, heavy losses and impacted rust at lower lacing bar connections.

Several vertical member sections exhibit up to moderate rust on nearly all surfaces at, and near, connections to lower chord gusset plates. Some members have approximately 90% of all rivet heads exhibiting moderate to heavy rust with losses and some exhibit heavy deterioration to up to 75% of lacing bars on one face. A few members exhibit holes.

Some of the most deteriorated truss vertical members are listed below:

Truss span 1, a few vertical truss web members at the west truss exhibit flange losses totaling approximately 5% of member flange area. Member L7U7 exhibits approximately 9% section loss to the total member flange area. The losses are typically noted at the interior face of the outstanding legs at the north side within the connection to the lower gusset plate.

City/Town	B.I.N.	Br. Dept. No.	8 - Structure No.	90 - Inspection Date
Portsmouth / Kittery			**3641 (ME) / 251/108 (NH)**	**10/11/11 - 12/14/11**

Remarks

Truss span 2, west truss, L4U4 near L4 exhibits approximately 23% section loss **(see sketch 28 and photo 98)**. Truss span 3, west truss, L4U4 near L4 and truss span 3, east truss, L2U2 at L2 exhibit similar losses. Truss span 4, west truss, L4U4 at L4 and L6U6 at L6 exhibit similar but less severe losses.

Truss span 2, west truss, L1U1 at L1 and L3U3 at L3 **(see sketch 28)** exhibit an average of approximately 28% section loss to the outstanding legs of the flange angles, which equates to approximately 16% section loss of the total cross section. Truss span 2, east truss, L3U3 at L3 and L5U5 at L5, and L1U1 at L1 at the east truss of span 4 exhibit similar losses. Truss span 2, west truss, L5U5 at L5 and L7U7 near U7 exhibit similar but less severe losses **(see photo 99)**.

Truss span 4, west truss, L0U0 near L0 has a 7” wide hole in the web **(see photo 100)**. This amounts to a 9% section loss. In span 5, at the east truss, L4U4 at L4 has a 4” wide by 2” high hole in the east channel section which equates to approximately 10% section loss relative to the whole cross section **(see photo 101)**.

Truss span 4, west truss, L3U3 at L3 exhibits approximately 47% section loss to the outstanding legs of each flange angle of the section which equates to approximately 25% section loss of the total cross section **(see photo 102)**. Truss span 4, west truss, L5U5 at L5 and L3U3 at L3, and truss span 5 at the east truss L5U5 at L5 exhibit similar section loss.

Truss span 5, east truss, L0U0 at L0 exhibits approximately 33% section loss to the east 15” wide channel section. This equates to approximately 12% section loss for the entire cross section.

Truss span 5, west truss, L7U7 at mid-height at the west face has two empty, 3/4” diameter drill holes.

Item 59.5.d - Lateral Bracing

Lower Lateral Bracing:

The vast majority of the lower lateral bracing angles exhibit severe impacted rust between the vertical legs and to all surfaces at the middle connection plates **(see photo 103)**. Many of these angles also exhibit moderate to heavy painted over losses throughout their length particularly at the connections to horizontal gusset plates at the lower panel points **(see photos 104 and 105).** In span 3, bay 7, there is 3/4” impact rust and an adjacent missing rivet.

Upper Lateral Bracing:

The upper lateral bracing angles exhibit up to 3/4" impacted rust between the horizontal legs and the horizontal connection plate to the truss upper chords in many locations **(see photo 106)**. The impacted rust measures up to 5" wide by up to 5" long under the horizontal leg of the upper lateral bracing. The horizontal connection plates at these locations exhibit light surface rust. There is heavy rust and 1/8" section loss to the horizontal connection plate at U8W for upper lateral brace U7EU8W in truss span 2.

The upper lateral bracing angles exhibit up to 11/16" impacted rust between the horizontal legs and the midspan horizontal connection plate in many locations **(see photo 107)**. The impacted rust measures up to 10" wide by up to 5" long under the horizontal leg of the upper lateral bracing. The horizontal connection plates at these locations exhibit up to 1/8" section loss by 1 1/4" wide by up to 4" long at the edge and/or around the horizontal leg of the upper lateral bracing.

There is up to 1/4" impacted rust between the vertical legs of the upper lateral bracing angles at midspan of the bay in isolated locations.

Item 59.5.g - End Posts

Refer to Item 59.5.c for comments.

Item 59.6 – Pin & Hangers

The hanger plate assemblies at the four corners of the lift span are generally in satisfactory condition with no appreciable rusting or section loss noted to the visible surfaces **(see photo 108)**. Phased array ultrasonic testing was performed on all eight hanger pins with testing performed from each end of the pins. The tests confirmed that there are no detectable cracks in the pins however wear grooves were noted near the top and bottom surface of most the pins where the hanger plates bear on the pins. In most cases these grooves are shallower than the 1/8” deep calibration sawcut that was cut in the calibration pin however a few locations were noted to be between 1/8” to ¼” deep. Refer to the attached ultrasonic test report for further information.

City/Town	B.I.N.	Br. Dept. No.	8 - Structure No.	90 - Inspection Date
Portsmouth / Kittery			**3641 (ME) / 251/108 (NH)**	**10/11/11 - 12/14/11**

Remarks

Item 59.7 - Conn Plt's, Gussets & Angles

The vertical gusset plates at the lower chords typically exhibit moderate paint loss and rusting with random areas of up to 1/8" section loss. Numerous exterior lower chord gusset plates exhibit up to heavy section loss throughout in the areas of connections to adjoining truss elements **(see photo 109),** particularly at panel points L0 and L8. In addition many of these gusset plates exhibit up to heavy impacted rust between the inside face of the plate and exterior surfaces of adjoining truss members **(see photo 110).** The impacted rust is also most prevalent at panel points L0 and L8.

Some of the most deteriorated lower chord gusset plates are listed below:

Truss Span 2, West Truss, West Gusset Plate, West Face at L0: throughout the connection to member L0U1 the gusset exhibits localized areas of 3/16" section loss around rivet heads with approximately 1/8" average loss throughout the connection **(see photo 111)**. In addition there is 3/16" loss by 4" wide around the perimeter of the gusset at the connection to lower chord member L0L1 **(see photo 112)**.

Truss Span 2, West Truss, West Gusset Plate, West Face at L8: along the edge of the diagonal 1/2" outer plate there is up to 5/8" impacted rust and 1/8" section loss **(see photo 113)**. Throughout the rest of the gusset there are areas of up to 1/8" section loss measuring 12" high by 7" wide. In addition there is 1/8" loss by 1 ½" high around the bearing connection plate **(see photo 114).**

Truss Span 3, West Truss, West Gusset Plate, West Face at L6: there are heavy losses throughout the center of the gusset plate. There is up to 1/4" section loss by the lowest 4" over the center 3'-7" length and 1/8" loss for a height of 9" just above. Throughout the connection to L6U6 the exterior face of the gusset exhibits approximately 1/8" loss by a 3" diameter around all the rivets. There is also 7/16" impacted rust between the bottom batten plate and the chord.

Truss Span 3, East Truss, East Gusset Plate, East Face at L8: there are two areas measuring 18" by 18" that exhibit 1/8" section loss **(see photo 115)**.

Truss Span 4, East Truss, West Gusset Plate, West Face at L8: at the north edge of the gusset plate there is 7/8" impacted rust between vertical gusset plates **(see photo 116)**. At the same location the east gusset plate (directly adjacent) exhibits similar impacted rust. In addition there is up to 1/8" section loss throughout the plate at the connection to L7L8.

The interior (west) face of the east gusset plate at the east truss in span 4 at the panel point L8 gusset plate has 3/16" deep by 4" diameter areas of loss around approximately 36 rivets **(see photo 117).** This type of pitting is very common throughout the lower chord gusset plates.

Truss Span 5, West Truss, West Gusset Plate, West Face at L0: throughout the connection to members L0U1 and L0L1 the gusset exhibits approximately 1/8" average section loss **(see photo 118)**.

The vertical gusset plates at the upper chords are typically in satisfactory condition with random areas of minor paint loss and rusting. End gusset plates (U0 and U8) at the upper chords exhibit up to heavy impacted rust and moderate section loss.

Some of the most deteriorated upper chord gusset plates are listed below:

Truss Span 1, West Truss, West Gusset Plate, West Face at U8: there is up to 1 1/4" thick impacted rust between the gusset and the flange of L8U8 at the lower 3" of the gusset plate as well as 1/8" section loss **(see photo 119)**. There are numerous locations where the impacted rust is nearly as thick and extends up to 11" high.

Truss Span 2, East Truss, East Gusset Plate, East Face at U5: there is a 30" high by 5" wide area at the connection to L5U5 that exhibits approximately 3/16" section loss. In addition there is up to 1/2" of impacted rust that extends 4" high and 3' long between the gusset plate and the bottom surface of member U4U5 **(see photo 120)**.

Truss Span 2, West Truss, West Gusset Plate, West Face at U0: there is nearly up to 2" thick impacted rust between the gusset and the flange of L0U0 at the bottom of the gusset plate with only 1/16" remaining to the outside 2 1/2" width by 24" high. In addition there is 5/16" loss around the connection angle near the drain trough at the top of the plate **(see photo 121)**. There is a similar condition in span 2, east truss, east face of the east plate at panel point U8 where there is also up to 3/16" loss around 16 deteriorated rivet heads.

City/Town	B.I.N.	Br. Dept. No.	8 - Structure No.	90 - Inspection Date
Portsmouth / Kittery			**3641 (ME) / 251/108 (NH)**	**10/11/11 - 12/14/11**

Remarks

Truss Span 4, East Truss, East Gusset Plate, East Face at U8: there is up to 1 3/8” thick impacted rust between the gusset and the flange of L8U8 at the lower 6” of the gusset plate as well as 1/8” section loss **(see photo 122)**. Span 4 at the west truss exhibits similar but less severe conditions at the same location.

Truss Span 4, East Truss, East Gusset Plate, East Face at U0: there is 5/16” section loss by up to 13” wide by 19” high at the bottom of the gusset plate. Above that loss there is 1/4” section loss by 7” wide by 3’-0” high.

Throughout the built up truss members there are many batten plates and lacing bars that exhibit impacted rust, heavy losses and numerous plates exhibit holes. Reference sketches, text descriptions in this report, and text below for information.

The following conditions are some of the worst locations for lacing bar and batten plate deterioration:

Truss Span 1, East Truss, Lower Chord L5L6: all top batten plates exhibit heavy deterioration.
Truss Span 1, East Truss, Web Diagonal L8U7: numerous top lacing bars exhibit heavy deterioration.

Truss Span 1, West Truss, Web Diagonals L0U1, L4U5 and L8U7: Many top lacing bars and batten plates exhibit heavy deterioration.
Truss Span 1, West Truss, Web Vertical L8U8: 100% loss by full height to a batten plate at mid-height on the north face.

Truss Span 2, East Truss, Lower Chord L0L1 and L5 through L8: up to all batten plates and lacing bars exhibit heavy deterioration.
Truss Span 2, East Truss, Web Diagonal L2U3: approximately 18 top lacing bars and 14 bottom lacing bars exhibit heavy rust and section loss.
Truss Span 2, East Truss, Web Diagonal L0U1: approximately 12 top lacing bars exhibit heavy rust and section loss.
Truss Span 2, East Truss, Web Diagonal L4U5: approximately 20 lacing bars exhibit heavy deterioration.
Truss Span 2, East Truss, Web Vertical L0U0: nearly all batten plates exhibit heavy deterioration.
Truss Span 2, West Truss, Lower Chord L5L6 and L7L8: all top and bottom lacing bars and most batten plates exhibit heavy deterioration.

Truss span 2, West Truss, Web Diagonals L4U5 and L6U5; approximately 22 lacing bars exhibit heavy deterioration **(see photo 123)**.
Truss Span 2, West Truss, Web Verticals L4U4 and L6U6: approximately 70% of lacing bars exhibit heavy deterioration **(see photo 98)**.
Truss Span 2, West Truss, Web Vertical L8U8: all batten plates exhibit heavy deterioration.

Truss Span 3, East Truss, Web Diagonal L2U3: approximately 12 top lacing bars and bottom batten plates exhibit heavy rust and section loss.
Truss Span 3, East Truss, Web Diagonal L6U5; approximately 12 lacing bars exhibit heavy rust and section loss.

Truss Span 4, West Truss, Web Vertical L4U4: approximately 50% of lacing bars at the north and south sides exhibit heavy rust and section loss.
Truss Span 4, East Truss, Lower Chord L1L2: all top and bottom lacing bars exhibit heavy rust and section loss.

Truss Span 5, West Truss, Web Vertical L4U4: approximately 50% of lacing bars exhibit heavy deterioration.
Truss Span 5, West Truss, Web Diagonal L0U1: approximately 50% of lacing bars exhibit heavy deterioration.

Railroad stringer connection plates, where they frame into end railroad floorbeams occasionally exhibit heavy rust with minor losses **(see photo 2939)**.

Refer to Items 59.3, 59.5.d and 59.10 for additional comments.

Item 59.9 - Bearing Devices
The lower chord truss bearings at the piers typically exhibit heavy rust on most components **(see photo 124)**.

The bearings exhibit up to 1/16" deep loss, up to 2" wide, around the pin nut and 1/8” loss to the vertical bearing plate around the circumference of the bearing pin **(see photos 124 and 125)**. In addition the vertical stiffener plates exhibit random areas with up to 1/4” deep section loss by 2 1/2” high by 20” long **(see photo 126)**.

City/Town	B.I.N.	Br. Dept. No.	8 - Structure No.	90 - Inspection Date
Portsmouth / Kittery			**3641 (ME) / 251/108 (NH)**	**10/11/11 - 12/14/11**

Remarks

The anchor bolt nuts at lower chord truss bearings typically exhibit heavy rust with blooming and up to 90% section loss **(see photo 127)**. There is also areas of heavy accumulation of sand and debris surrounding the bearings.

The bearings and centering casting for end floorbeams 0 and 8 in the lift span exhibit up to 100% section loss to the anchor bolt nuts **(see photo 128)**.

Item 59.10 - Diaphragms/Cross Frames

The cross frames that connect the railroad stringers at third points between floorbeams are typically in satisfactory condition. The connection plates attaching the cross frames to the stringers (these plates also connect the floor system bracing to the stringers) are typically in serious condition with large holes and areas of 1/16" thickness remaining **(see photo 58)**.

A few cross frames in span 4 exhibit heavy deterioration with holes **(see photo 129)**.

Item 59.11 - Rivets & Bolts

Many rivet heads at lower chord gusset plates, particularly at panel points L0 and L8, exhibit heavy rust and moderate to heavy section loss **(see photos 112 through 114 & 116)**. In addition many lower rows of rivets at the east and west lower chords and rivets connecting batten plates to the top and bottom of lower chord members also exhibit heavy rust with losses.

The following conditions are some of the worst locations for rivet deterioration in truss members;
Truss Span 1, East Truss, Lower Chord L5L6: rivets at top batten plates exhibit heavy deterioration.
Truss Span 1, East Truss, Lower Chord L6L7 and L7L8: lower row of web rivets exhibit heavy deterioration.

Truss Span 1, West Truss, Lower Chord L4L5: rivets at top batten plates exhibit heavy deterioration (up to 90% rivet head loss).

Truss Span 2, East Truss, Lower Chords L0L1 and L7L8: all top and bottom rivet heads and 15% of web rivets exhibit heavy deterioration.
Truss Span 2, East Truss, Lower Chord L1L2: 45% of all top and bottom rivet heads exhibit heavy deterioration.
Truss Span 2, East Truss, Lower Chords L2L3, L3L4: up to approximately 50% of rivet heads exhibit heavy deterioration. **(see photo 130)**.

Truss Span 2, East Truss, Lower Chords L5L6 and L6L7: all top and bottom rivets and 15% of the web rivets exhibit heavy deterioration.
Truss Span 2, East Truss, Web Diagonals L4U5 and L6U7: approximately 40 rivet heads exhibit heavy deterioration.
Truss Span 2, East Truss, Lower Gusset Plate at L8: 80% of rivet heads exhibit heavy deterioration.

Truss Span 2, West Truss, Lower Chord Splice at L5L6: 40% of all rivet heads exhibit heavy deterioration.
Truss Span 2, West Truss, Lower Chord L7L8: all rivet heads exhibit heavy deterioration.
Truss Span 2, West Truss, Web Diagonal L6U5: approximately 40 rivet heads exhibit heavy deterioration.
Truss Span 2, West Truss, Web Diagonal L8U7: approximately 50% of rivet heads exhibit heavy deterioration.
Truss Span 2, West Truss, Web Verticals L6U6 and L8U8: approximately 70% of rivet heads exhibit heavy deterioration.

Truss Span 3, West Truss, Lower Chord L6L7: approximately 50% of the east web lower row rivet heads exhibit heavy deterioration.

Truss Span 4, West Truss, Lower Chord L7L8: approximately 75% of the rivet heads exhibit heavy deterioration **(see photo 116)**.
Truss Span 4, West Truss, Lower Chord L5L6: all rivets at the lower row of the east and west web plates exhibit heavy deterioration.

Truss Span 5, East Truss, Lower Chord L5L6: all lower row rivets at the west side exhibit heavy deterioration.

The rivets at the connections of the deteriorated web members of the truss exhibit moderate to advanced deterioration.

There is 100% section loss to one rivet head for the west roadway stringer connection to floorbeam 3 in bay 4 of truss span 3 **(see photo 131)**. Several rivets have sheared near midspan of end floorbeams 0 and 8 in truss span 3 **(see photos 74 & 75)**.

City/Town	B.I.N.	Br. Dept. No.	8 - Structure No.	90 - Inspection Date
Portsmouth / Kittery			**3641 (ME) / 251/108 (NH)**	**10/11/11 - 12/14/11**

Remarks

Item 59.14 - Paint/Coating
The paint system on the exterior faces of the lower half of the trusses has failed at numerous locations. This is particularly prominent near the ends and center of the truss spans **(see photos 66 and 132)**.

The paint system at the top of the upper and lower flanges at the railroad stringers and floorbeams has failed in many locations. The paint loss at the railroad floorbeams is typically worse than at the stringers. As timber ties atop the railroad stringers and floorbeams were moved for inspection the severity of the paint loss was revealed **(see photo 68)**.

SuperStructure Load Vibration Notes
There is minor load vibration under heavy live load.

Item 60.2 - Piers or Bents
Item 60.2.a - Pedestals
The reinforced concrete pedestals for the truss bearings exhibit full height hairline cracks.

Item 60.2.b - Caps
The reinforced concrete pier caps exhibit 1/16" wide vertical/map cracking with efflorescence, delaminated areas and advanced spalling with exposed reinforcement. Piers 15, 18 and 19 exhibit the most severe conditions. The following are the most notable pier cap deficiencies:

Pier 15, Southwest Corner, South Face: up to 4'-4" long by full cap height by 6" deep spall with exposed reinforcement **(see photo 133)**. This spall extends 4'-3" (wide) across the top of the pier cap by 8" deep with exposed reinforcement.

Pier 15, South Face, West of West Truss: 5'-0" long by full cap height by 5" deep spall with exposed reinforcement.

Pier 15, South Face between Trusses: 7'-0" long by full cap height by 6" deep spall of the pier backwall with exposed reinforcement **(see photo 134)**. This spall extends to the edge of the masonry plate for the west truss bearing.

Pier 15, East Face: 2'-3" wide by full cap height by 10" deep spall of the nose with exposed reinforcement **(see photo 135)**.

Pier 16, Southwest Corner, South Face: 3'-0" long by 15" high by 2 1/2" deep spall with efflorescence **(see photo 8)**. This spall extends 11" (wide) across the top of the pier cap.

Pier 18, Southwest Corner, South Face: two horizontal corner spalls up to 4'-10" long by up to 10" high by up to 6" wide. There is also a vertical spall measuring 8" wide by 2'-0" high by 3 1/2" deep with exposed reinforcement.

Pier 18, Top of Cap at Center: 13'-0" long by 12'-0" wide delaminated area with 3" deep spalling and punky concrete **(see photo 136)**.

Pier 19, Top of Cap at West End: 4'-0" long by full width by up to 3" deep spall with punky concrete **(see photo 137)**.

Pier 19, Top of Cap adjacent to West Truss Bearings: up to 3'-3" long by up to 2'-6" wide by 2" deep spall with punky concrete adjacent to each bearing **(see photo 138)**.

Pier 20, Top of Cap, Approach Span 21: 3'-0" long by 3'-0" wide (across cap) by 1" deep spall adjacent to the west bearing.

The “Headway Speed While Passing Under Bridge” signs on pier 17 and 18 caps are in good condition.

Item 60.2.d - Stems/Webs/Pierwalls
The granite courses for the pierwalls exhibits isolated 1/16″ wide vertical/diagonal cracks **(see photo 139)**.

Refer to Item 60.2.e and the Underwater Inspection Report for additional comments.

Item 60.2.e – Pointing
The granite facade of the pierwalls is located within the tidal zone. There is deteriorated or missing mortar between the granite courses in isolated locations. There are a few mortar joints under the pier cap with moderate efflorescence **(see photos 133 and 140)**.

Refer to the Underwater Inspection Report for additional comments.

City/Town	B.I.N.	Br. Dept. No.	8 - Structure No.	90 - Inspection Date
Portsmouth / Kittery			**3641 (ME) / 251/108 (NH)**	**10/11/11 - 12/14/11**

Remarks

Item 60.2.j – Lift Span Towers

The lift span towers are in fair condition overall. The exterior surfaces of the towers exhibit areas of surface rusting throughout **(see photo 141)**. The lower reaches of the tower, from the base at extending to approximately midway between level T3 and T4, exhibit the heaviest rusting as they are in the splash zone of the roadway. In areas where rust delaminations were chipped away, the depth of section loss was generally in the range of 1/8" to 3/16". In a few locations along the north and south faces of the tower columns where the tower columns are constructed with thinner plates, some local rust holes ranging from 1" to 4 ½" in diameter were noted **(see photos 145 through 147)**.

The middle portion of the tower columns are sheathed with ¼" tick steel plates which enclose and protect the internal longitudinal bracing system. These plates exhibit heavy rusting on the interior faces (side facing the roadway) within the splash zone from the T4 level down to the base of the towers. The sheathing plates, and access doors that penetrate the sheathing, contain numerous rust hole perforations **(see photos 149 & 150)**. At the north tower, the east (interior) face of the west column has a 5'-8" long section of a seam weld, starting just above safetywalk level, that has torn open due to impacted rust **(see photo 150)**. Many of the access doors at roadway and railroad track level are in poor condition with some inoperable due to failed hinges.

The tower columns contain numerous horizontal seam welds between sections of the steel plates. Many of the seam welds were noted to have cracked, particularly along the thinner plates of the north and south faces of the tower columns **(see photos 151 & 153)**. At the west column of the south tower, approximately midway between T1 and T2 level, a local region of the south plate exhibits a 16" wide horizontal crack which turns upward and extends upward about 5" at each end of the crack **(see photo 152)**. In addition a small rust hole has developed surrounding these cracks. Rust holes are also forming in the north and south column plates near the top of the columns where the internal concrete fill is terminated (approximately at elevation of floor in mechanical rooms). These rust holes extend up to 18" wide and 12" high **(see photos 153 & 154).** Additionally, at approximately the floor level of the mechanical rooms, there is an overlapping plate seam on the exterior (side facing away from roadway) face of the east and west tower plates. There is often impacted rust at this overlapping seam which has distorted the lower 4" of the upper plate outward by about 5/8" **(see photo 156)**.

Impacted rust is also prevalent at the edges of the sheathing plates surrounding the openings at the counterweight level **(see photo 157)**. There is an overlapping horizontal seam in the sheathing plates just above the counterweight openings on the north and south faces of the towers that exhibits similar pack rust distortion due to widely spaced rivet connection points.

All of the tower columns exhibit sizable cracks in the vertical connection welds for the north and south tower plates at the upper portion of the towers near the counterweight level. These cracked welds are up to 12'8" long and the plates have typically bowed outward about ½" in the area of the cracks. There was no sign of heavy rusting or impacted rust in the areas where the plates have bowed outward. The following is a summary of the noted vertical cracks of this type:

SOUTH TOWER – East Column
South Plate- 8'-8" long crack in weld with 1 1/8" separation, at T1 level **(see photos 158 & 159)**
North Plate- 3'-1" long crack in weld with 1/2" separation, between T0 & T1 level **(see photo 160)**

SOUTH TOWER – West Column
South Plate- 3'-3" long crack in weld with 1/2" separation, at T2 level
(at T1 level the south plate has noticeable outward bow of about 1" at centerline of plate over a height of about 10 ' but no separation at weld observed)

NORTH TOWER – East Column
North Plate- 11'-4" long crack in weld with 1" maximum separation, at T2 level **(see photo 161)**

NORTH TOWER – West Column
South Plate- 11'-4" long crack in weld with 1/2" separation, between T1 & T2 level **(see photo162)**
North Plate- 12'-8" long crack in weld with 2 ¼" separation, at T1 level **(see photos 163 & 164)**

City/Town	B.I.N.	Br. Dept. No.	8 - Structure No.	90 - Inspection Date
Portsmouth / Kittery			**3641 (ME) / 251/108 (NH)**	**10/11/11 - 12/14/11**

Remarks

The structural steel roof trusses and wall framing members within the mechanical rooms typically exhibit surface rusting with no appreciable section loss **(see photo 165)**. The exception to this occurs at the base of a couple of windows within each mechanical room where some heavy rusting was noted to the checkered steel floor plate with some small rust hole perforations. Additionally, some local loss to the window support angles also occurs in some of these areas (see photo 166).

The roof of the mechanical rooms typically has extensive loss of paint with surface rust and no appreciable section loss noted **(see photo 167)**.

Item 60.2.j – Tower Lateral Bracing

There is a lateral bracing in the transverse direction extending between the east and west tower columns is in fair condition overall. Numerous lacing bars for the T4 level bracing just above roadway level exhibit areas of heavy rusting with scattered lacing bars rusting through **(see photo 168)**. Slight bends were noted to some members above the roadway from apparent vehicle impacts. The connection gusset plate for the north lateral brace, south tower, at the connection to the west column is also bent out of alignment about 3” at the east edge of the plate and has a defined crease/dent along the top chord of the horizontal brace.

At the south tower, the upper set of north diagonal bracing (T1 – T2 level) has been replaced with rolled beam members due prior damage to the bracing which occurred several years ago when the span went out of skew. The upper ends of the diagonal bracing in the bay below this level (T2 – T3 level) was also damaged when the span went out of skew but to a lesser degree. The north channel at these locations was bent up to 3” to the south which buckled numerous lacing bars. 17” wide x ¾” thick x 3’ long steel plates were bolted to the channels using the widely spaced holes for the removed lacing bars as a repair **(see photo 170)**.

The internal longitudinal bracing located within the sheathing plate enclosure is generally in satisfactory condition. There is considerable build-up of bird debris within the tower enclosure with areas of surface rusting to the bracing members, gussets and interior surface of the column and sheathing plates but with no appreciable section loss. There is up to about 6” of bird debris on many of the bracing struts that consist of rolled beam element with the web set horizontally which traps the debris between the flanges. The bracing gusset plates at the base level, just above the pier cap exhibit some heavy rusting with section loss.

The towers are anchored at the base with a grillage of anchor bolts and plates **(see photo 142**). The lower 3” of many of the anchor bolts exhibit some minor section loss (typically 1/16” to 1/8” deep) with some debris packed in around the base of the anchor bolts **(see photo 143)**. Additional some scattered moderate section loss occurs on the vertical web stiffeners in place between the anchor bolts and the anchor plate at the top anchor plate **(see photo 144)**.

TRAFFIC SAFETY

Item 36a - Bridge Railing

The bridge railing on this structure consists of the original steel pipe railing retrofitted with a tube steel rub rail and W beam posts sistered to the original posts. Refer to Item 58.8 for additional comments.

City/Town	B.I.N.	Br. Dept. No.	8 - Structure No.	90 - Inspection Date
Portsmouth / Kittery			**3641 (ME)/251/108 (NH)**	**10/11/11 - 12/14/11**

Sketches

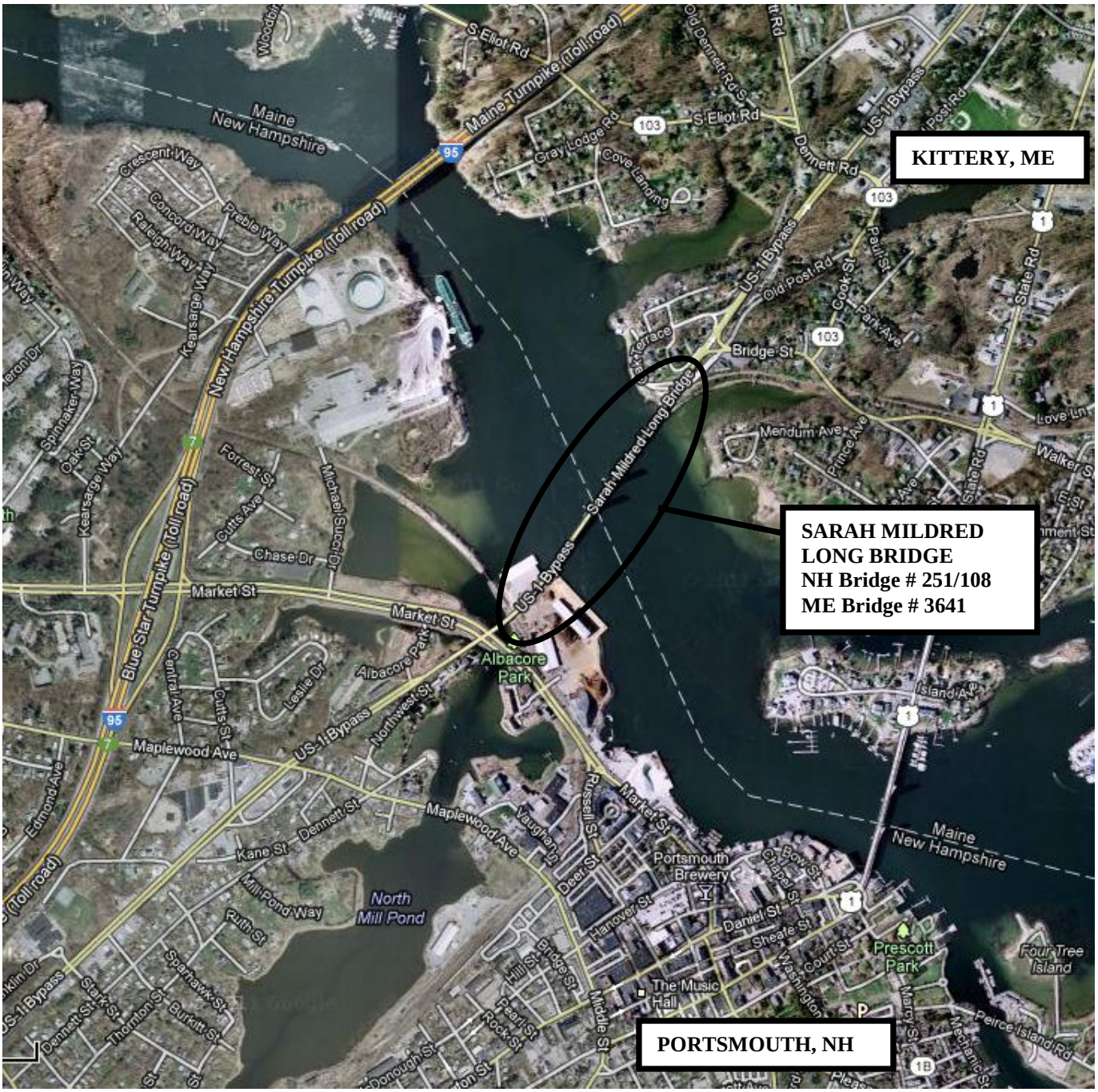

(Image obtained from Google.com)

Sketch 1: Location Map.

City/Town	B.I.N.	Br. Dept. No.	8 - Structure No.	90 - Inspection Date
Portsmouth / Kittery			**3641 (ME)/251/108 (NH)**	**10/11/11 - 12/14/11**

Sketches

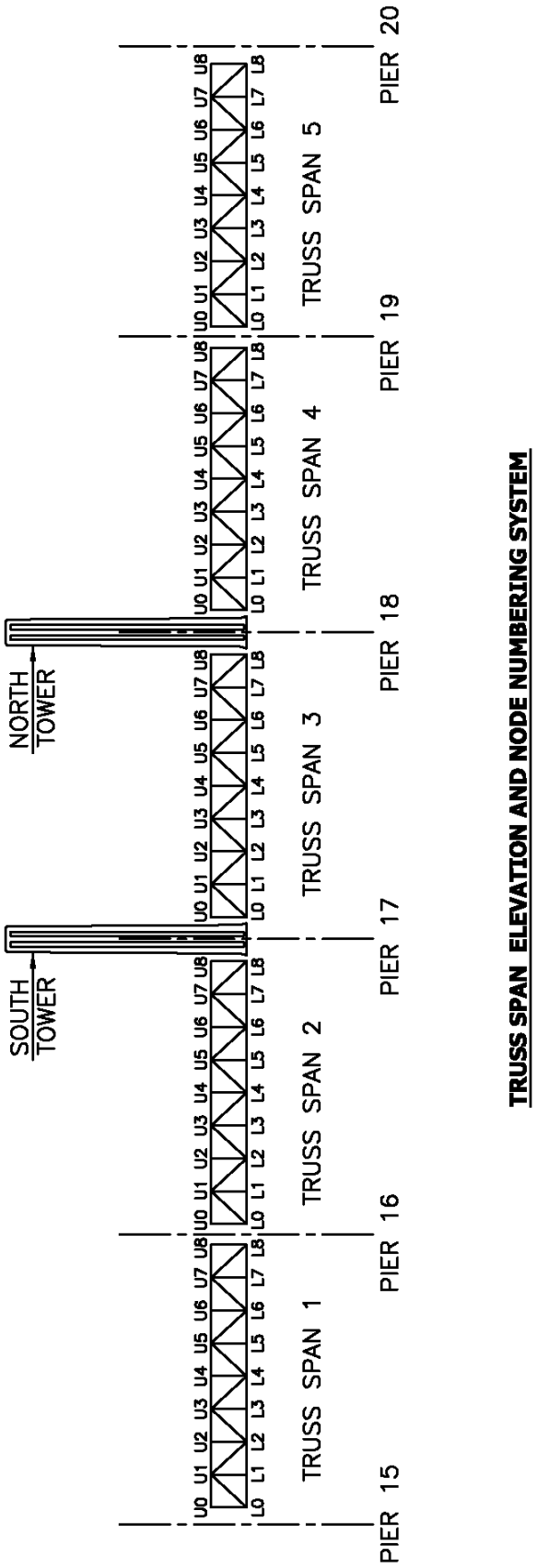

Sketch 2: Truss Elevation and Node Numbering System.

City/Town	B.I.N.	Br. Dept. No.	8 - Structure No.	90 - Inspection Date
Portsmouth / Kittery			**3641 (ME)/251/108 (NH)**	**10/11/11 - 12/14/11**

Sketches

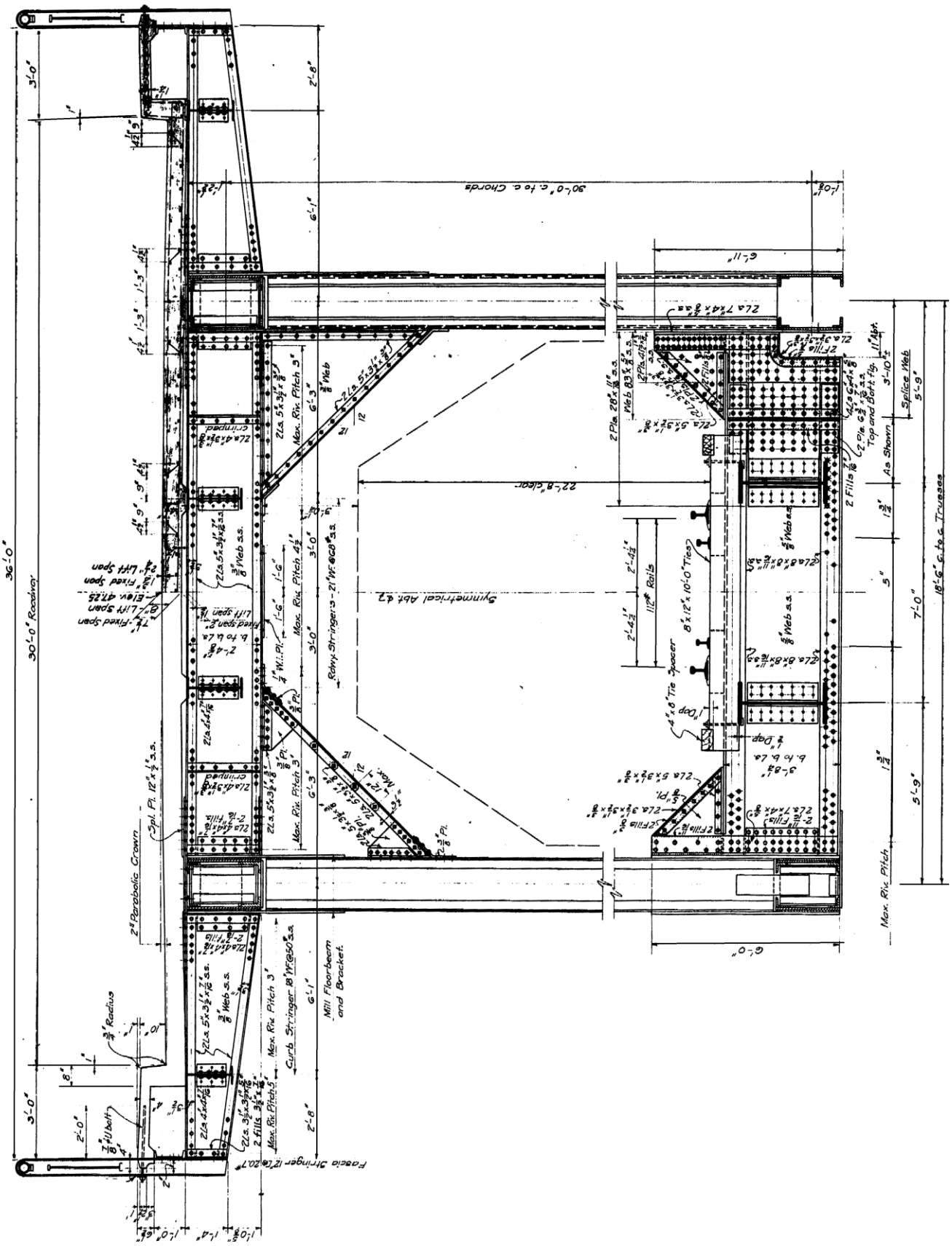

Sketch 3: Truss Span Cross Section.

City/Town	B.I.N.	Br. Dept. No.	8 - Structure No.	90 - Inspection Date
Portsmouth / Kittery			**3641 (ME)/251/108 (NH)**	**10/11/11 - 12/14/11**

Sketches

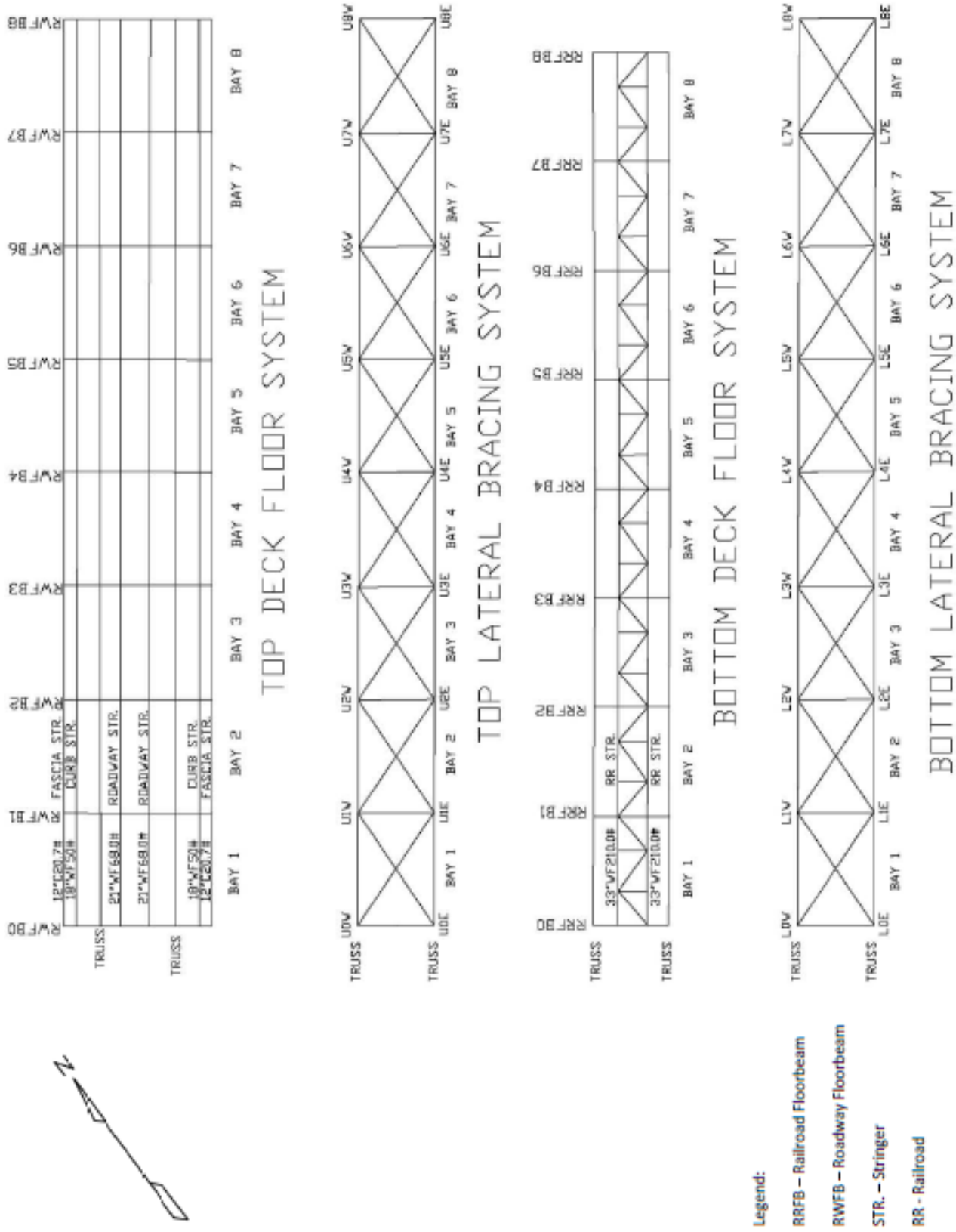

Sketch 4: Truss Spans Floor System and Bracing Framing Plans.

City/Town	B.I.N.	Br. Dept. No.	8 - Structure No.	90 - Inspection Date
Portsmouth / Kittery			**3641 (ME)/251/108 (NH)**	**10/11/11 - 12/14/11**

Sketches

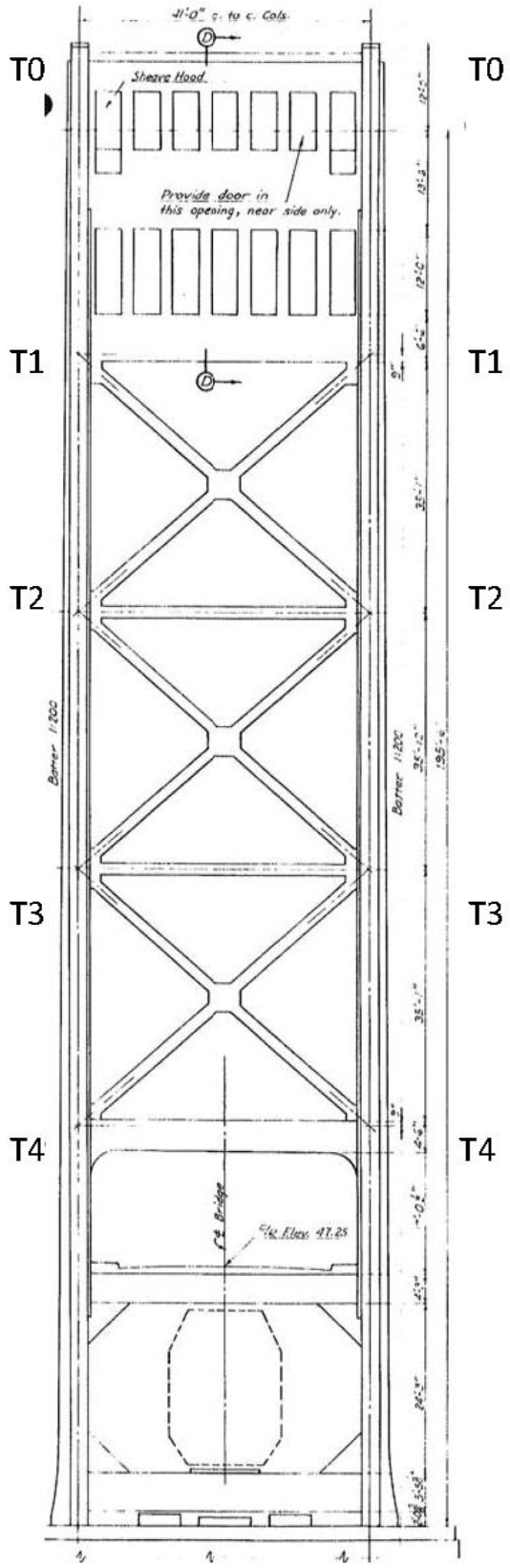

Sketch 5: Lift Span Tower Elevation.

City/Town	B.I.N.	Br. Dept. No.	8 - Structure No.	90 - Inspection Date
Portsmouth / Kittery			**3641 (ME)/251/108 (NH)**	**10/11/11 - 12/14/11**

Sketches

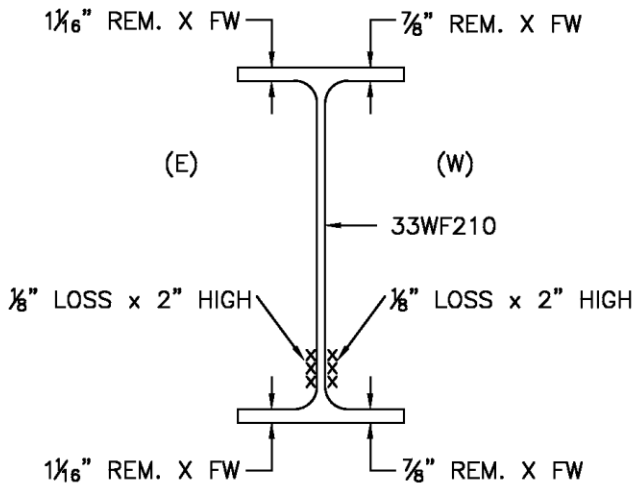

EAST RAILROAD STRINGER, TRUSS SPAN 1, BAY 1, SOUTH QUARTER POINT

AS-BUILT PROPERTIES (33WF210):
d = 33.120"
bf = 15.783"
tf = 1.210"
tw = 0.748"

⊕ INDICATES THICKNESS REMAINING PER D-METER

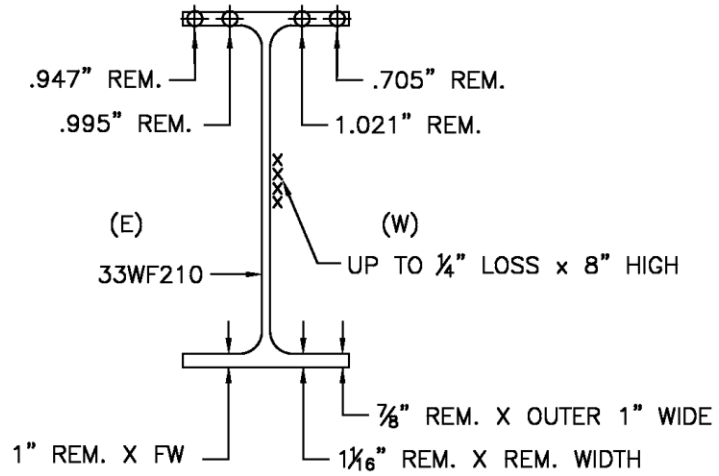

WEST RAILROAD STRINGER, TRUSS SPAN 2, BAY 1, @ MIDSPAN

Sketch 6: Railroad Stringer Conditions 1 of 2.

City/Town	B.I.N.	Br. Dept. No.	8 - Structure No.	90 - Inspection Date
Portsmouth / Kittery			**3641 (ME)/251/108 (NH)**	**10/11/11 - 12/14/11**

Sketches

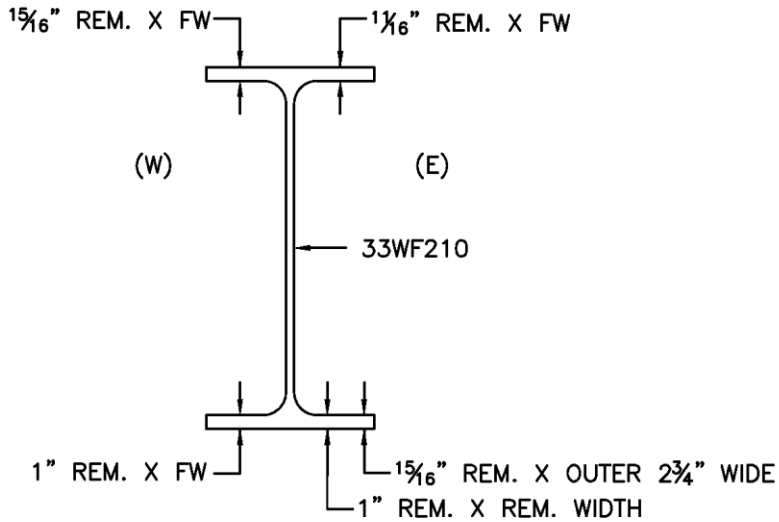

NOTE: SIMILAR BUT LESS SEVERE CONDITION FOR FULL LENGTH OF STRINGER.

EAST RAILROAD STRINGER, TRUSS SPAN 2, BAY 8, NORTH THIRD POINT

AS-BUILT PROPERTIES (33WF210):

d = 33.120"
bf = 15.783"
tf = 1.210"
tw = 0.748"

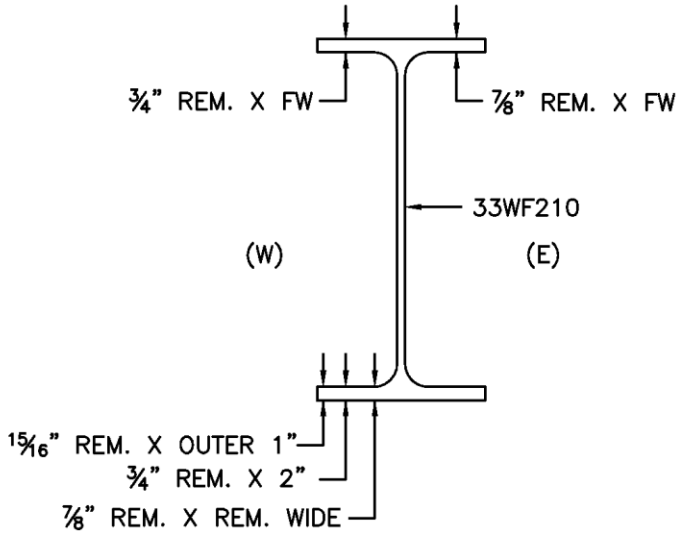

NOTE: TRUSS SPAN 4, BAY 4, WEST STRINGER; SIMILAR.

EAST RAILROAD STRINGER, TRUSS SPAN 4, BAY 4, NORTH QUARTER POINT

Sketch 7: Railroad Stringer Conditions 2 of 2.

City/Town	B.I.N.	Br. Dept. No.	8 - Structure No.	90 - Inspection Date
Portsmouth / Kittery			**3641 (ME)/251/108 (NH)**	**10/11/11 - 12/14/11**

Sketches

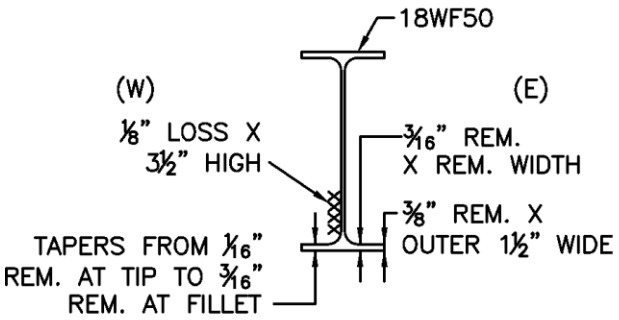

NOTE:
THIS SECTION IS AT A DETERIORATED SCUPPER LOCATION.

EAST CURB STRINGER, TRUSS SPAN 1, BAY 7, AT MIDSPAN

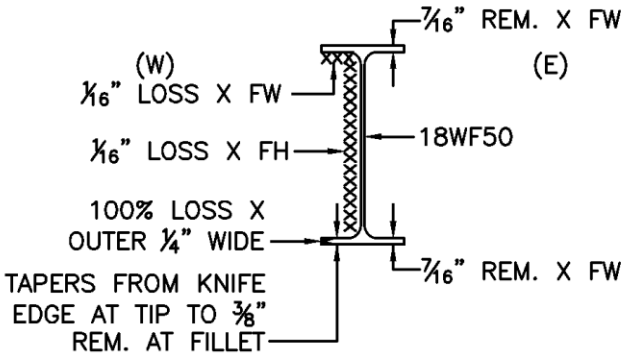

NOTE:
THIS SECTION IS AT A DETERIORATED SCUPPER LOCATION.

EAST CURB STRINGER, TRUSS SPAN 2, BAY 2, MIDSPAN

AS-BUILT PROPERTIES (18WF50):
d = 18.000"
bf = 7.500"
tf = 0.570"
tw = 0.358"

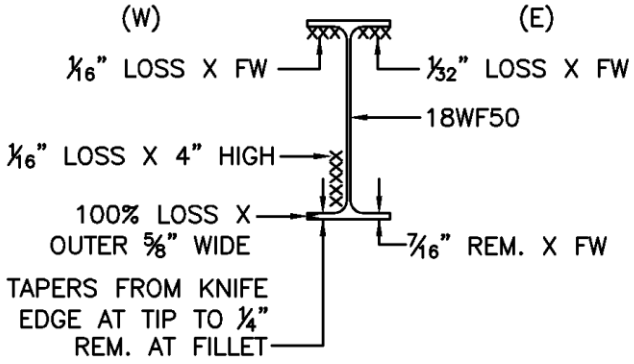

NOTE:
THIS SECTION IS AT A DETERIORATED SCUPPER LOCATION.

EAST CURB STRINGER, TRUSS SPAN 2, BAY 7, AT MIDSPAN

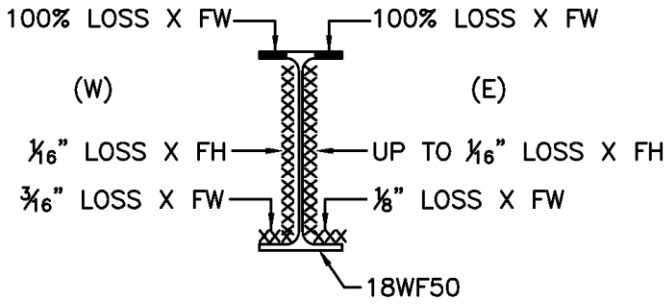

EAST CURB STRINGER, TRUSS SPAN 2, BAY 8, AT FLOORBEAM 8

Sketch 8: Curb Stringer Conditions 1 of 2.

City/Town	B.I.N.	Br. Dept. No.	8 - Structure No.	90 - Inspection Date
Portsmouth / Kittery			**3641 (ME)/251/108 (NH)**	**10/11/11 - 12/14/11**

Sketches

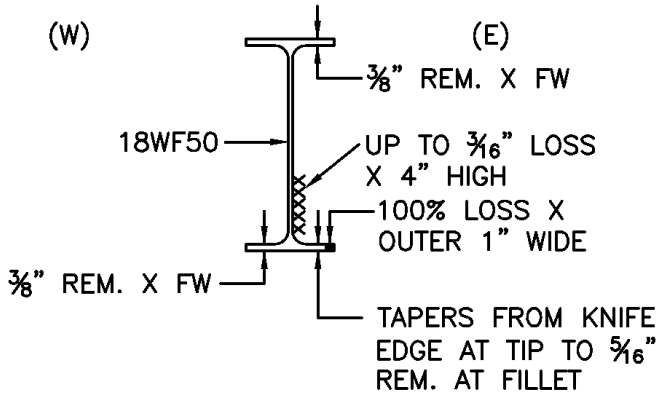

EAST CURB STRINGER, TRUSS SPAN 3, BAY 8, AT MIDSPAN

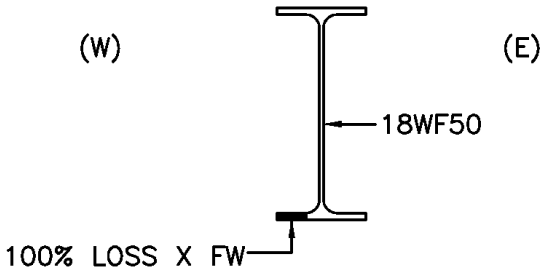

EAST CURB STRINGER, TRUSS SPAN 3, BAY 1, AT MIDSPAN

AS-BUILT PROPERTIES (18WF50):

d = 18.000"
bf = 7.500"
tf = 0.570"
tw = 0.358"

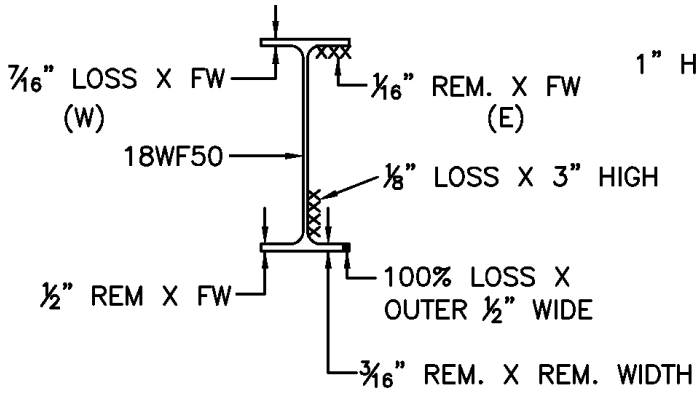

WEST CURB STRINGER, TRUSS SPAN 3, BAY 4, AT MIDSPAN

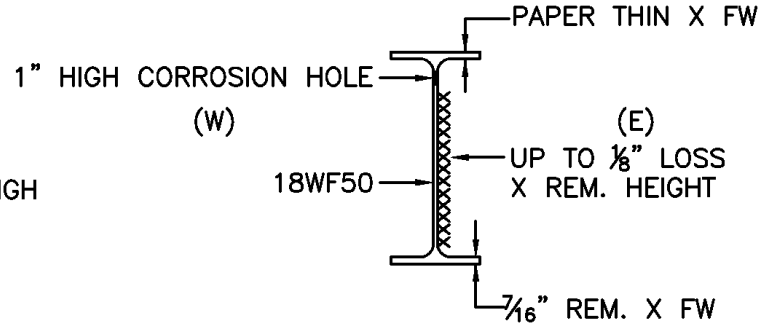

WEST CURB STRINGER, TRUSS SPAN 4, BAY 1, AT FLOORBEAM 0

Sketch 9: Curb Stringer Conditions 2 of 2.

City/Town	B.I.N.	Br. Dept. No.	8 - Structure No.	90 - Inspection Date
Portsmouth / Kittery			**3641 (ME)/251/108 (NH)**	**10/11/11 - 12/14/11**

Sketches

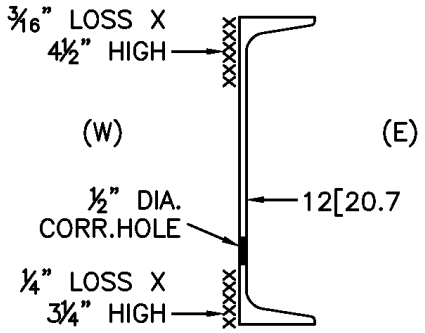

WEST FASCIA STRINGER
TRUSS SPAN 1, BAY 5, AT FLOORBEAM 5

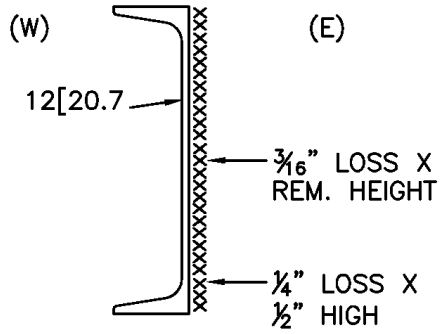

EAST FASCIA STRINGER
TRUSS SPAN 2, BAY 2, AT FLOORBEAM 2

AS-BUILT PROPERTIES (12[20.7):
d = 12.000"
bf = 2.940"
tf = 0.501"
tw = 0.282"

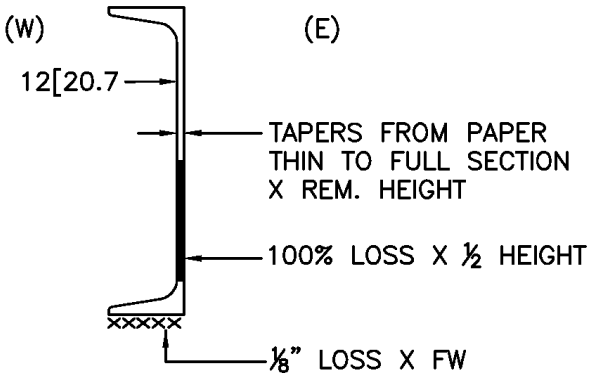

NOTE:
THIS FASCIA STRINGER IS ADJACENT TO THE WARNING GATE.

EAST FASCIA STRINGER
TRUSS SPAN 2, BAY 5, AT FLOORBEAM 5

Sketch 10: Fascia Stringer Conditions 1 of 1.

City/Town	B.I.N.	Br. Dept. No.	8 - Structure No.	90 - Inspection Date
Portsmouth / Kittery			**3641 (ME)/251/108 (NH)**	**10/11/11 - 12/14/11**

Sketches

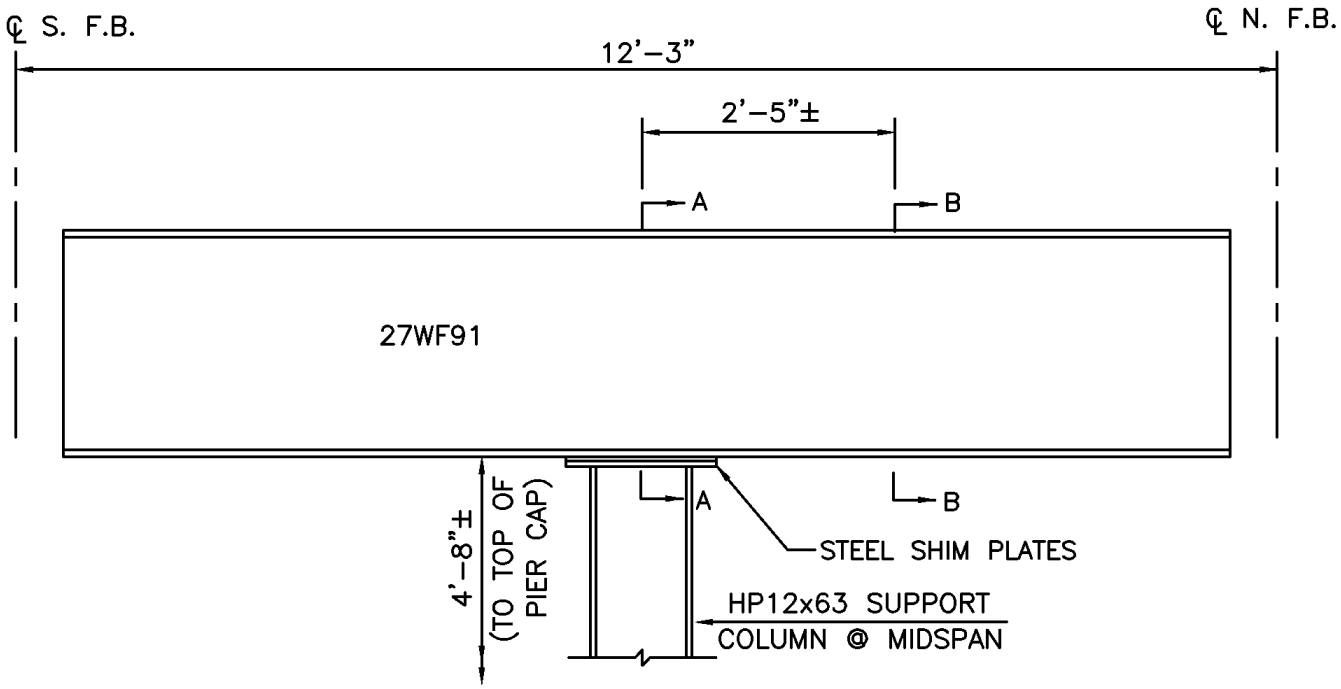

EAST ELEVATION
WEST RAILROAD STRINGER, SOUTH TOWER

AS–BUILT PROPERTIES (27WF91):
d = 26.840"
bf = 9.983"
tf = 0.712"
tw = 0.483"

⊕ INDICATES THICKNESS REMAINING PER D–METER

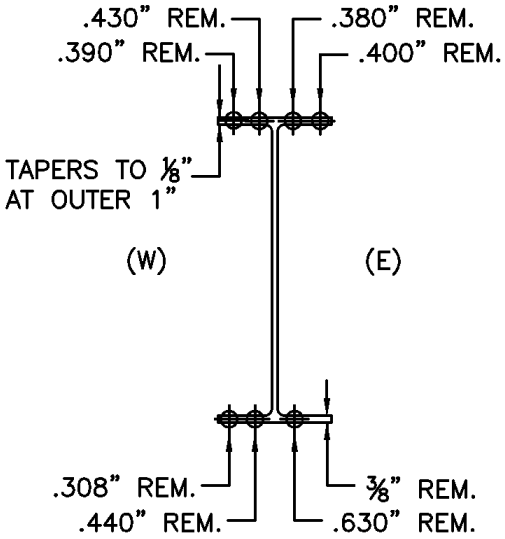

SECTION A-A

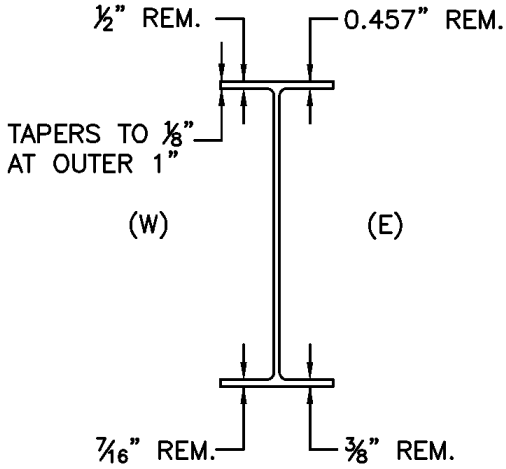

SECTION B-B

Sketch 11: West Railroad Stringer at South Tower.

City/Town	B.I.N.	Br. Dept. No.	8 - Structure No.	90 - Inspection Date
Portsmouth / Kittery			**3641 (ME)/251/108 (NH)**	**10/11/11 - 12/14/11**

Sketches

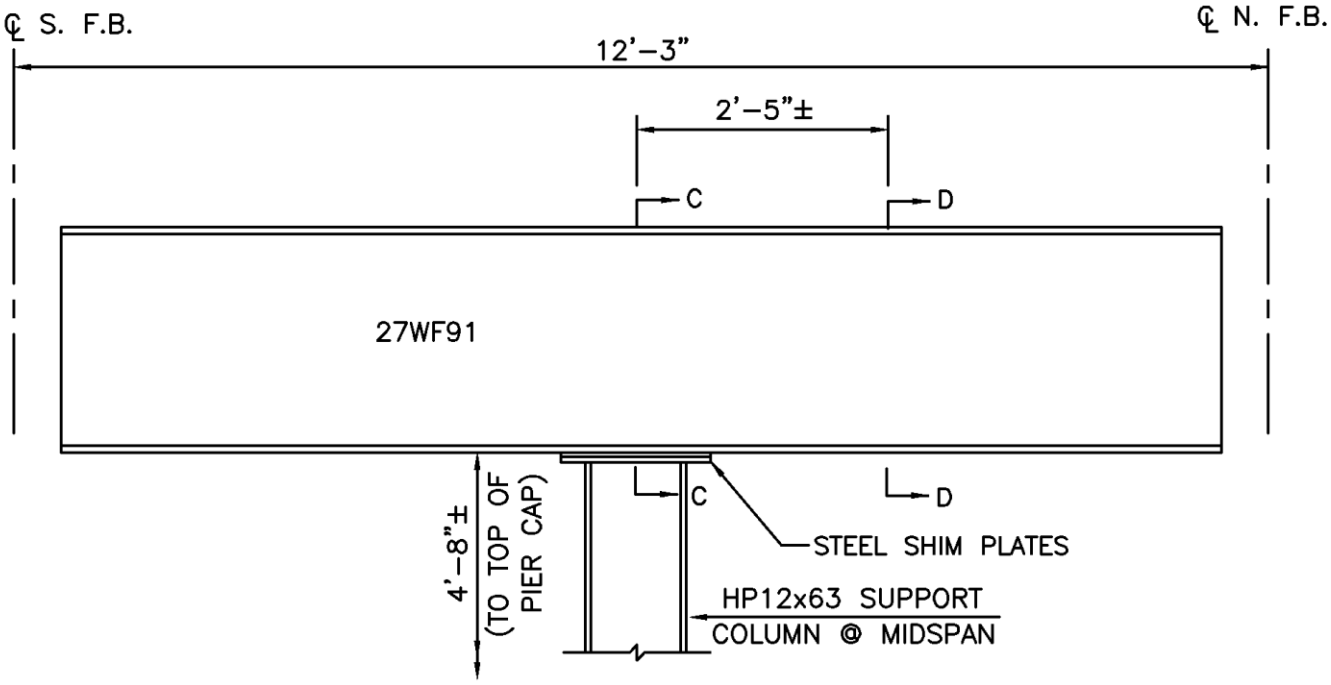

EAST ELEVATION
EAST RAILROAD STRINGER, NORTH TOWER

AS–BUILT PROPERTIES (27WF91):
d = 26.840"
bf = 9.983"
tf = 0.712"
tw = 0.483"

⊕ INDICATES THICKNESS REMAINING PER D–METER

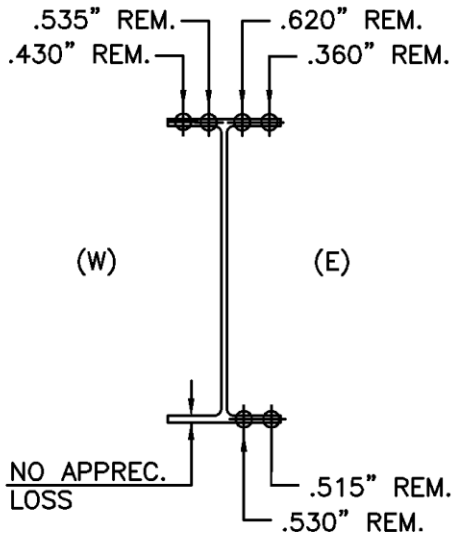

SECTION C-C

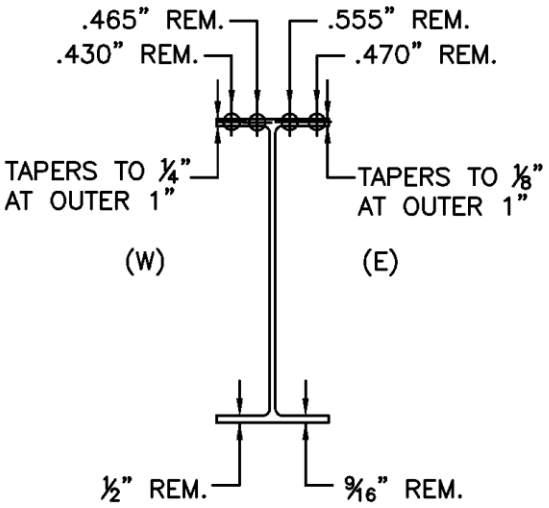

SECTION D-D

Sketch 12: East Railroad Stringer at North Tower.

City/Town	B.I.N.	Br. Dept. No.	8 - Structure No.	90 - Inspection Date
Portsmouth / Kittery			**3641 (ME)/251/108 (NH)**	**10/11/11 - 12/14/11**

Sketches

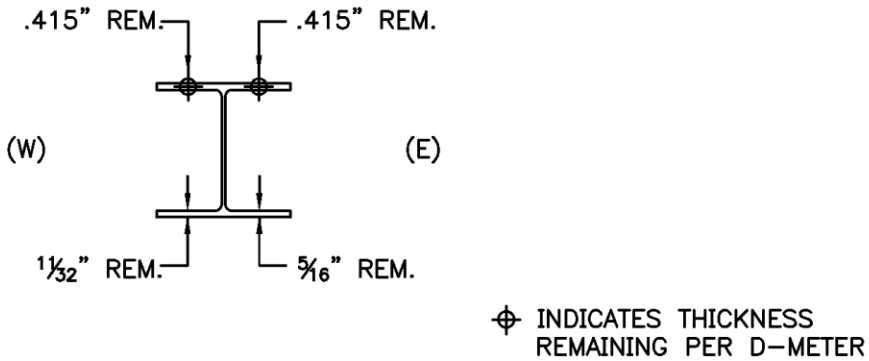

EAST RAILROAD WALKWAY STRINGER, SOUTH TOWER
SECTION AT MIDSPAN

AS-BUILT PROPERTIES (12WF45):
d = 12.060"
bf = 8.042"
tf = 0.576
tw = 0.336"

NOTES:

1. HEAVY SECTION LOSS IS TYPICAL TO FLANGES THROUGHOUT ENTIRE LENGTH OF THE WALKWAY STRINGERS. THE OUTER ½" IS COMPLETELY RUSTED THROUGH ON INNER SIDE OF BOTTOM FLANGE OF STRINGER SHOWN ABOVE FROM APPROX. ⅓ SPAN POINT FROM NORTH TO THE NORTH BEARING.
2. ALL RAILROAD WALKWAY STRINGERS EXHIBIT SIMILAR FLANGE LOSSES. SOME RAILROAD WALKWAY STRINGERS ALSO EXHIBIT AREAS OF RUST HOLES IN THE LOWER WEB.

Sketch 13: East Railroad Walkway Stringer at Midspan, South Tower.

City/Town	B.I.N.	Br. Dept. No.	8 - Structure No.	90 - Inspection Date
Portsmouth / Kittery			**3641 (ME)/251/108 (NH)**	**10/11/11 - 12/14/11**

Sketches

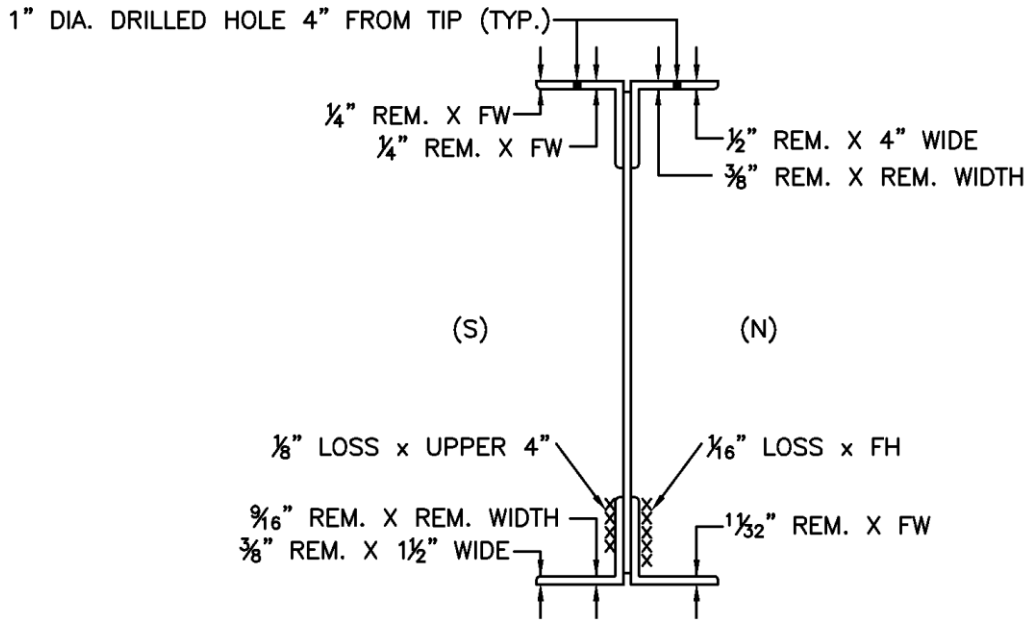

RAILROAD FLOORBEAM 0, TRUSS SPAN 1, AT MIDSPAN

AS-BUILT PROPERTIES:
WEB PLATE = ⅝"x44¼"
FLANGE ANGLES = L8x8x1 1/16

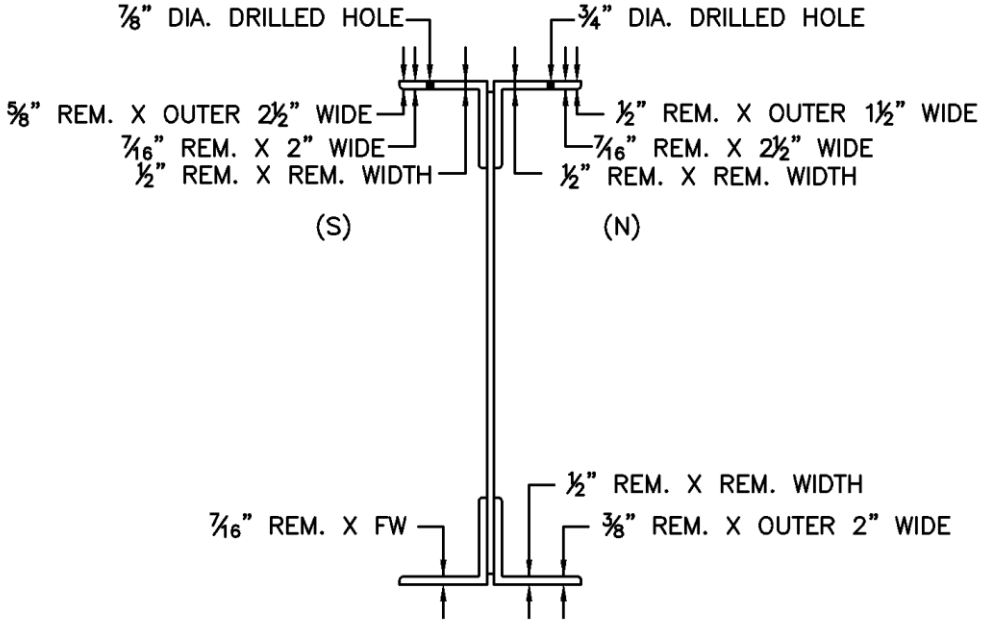

RAILROAD FLOORBEAM 2, TRUSS SPAN 1, 2'-6" EAST OF WEST STRINGER

Sketch 14: Railroad Floorbeam Conditions 1 of 3.

City/Town	B.I.N.	Br. Dept. No.	8 - Structure No.	90 - Inspection Date
Portsmouth / Kittery			**3641 (ME)/251/108 (NH)**	**10/11/11 - 12/14/11**

Sketches

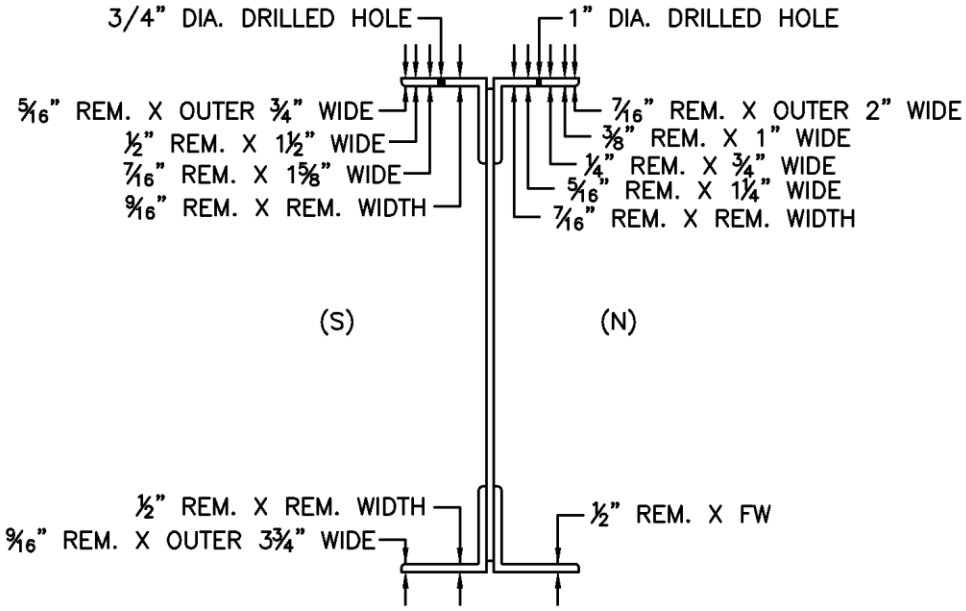

RAILROAD FLOORBEAM 8, TRUSS SPAN 1, AT MIDSPAN

AS-BUILT PROPERTIES:
WEB PLATE = 5/8"x44 1/4"
FLANGE ANGLES = L8x8x1 1/16

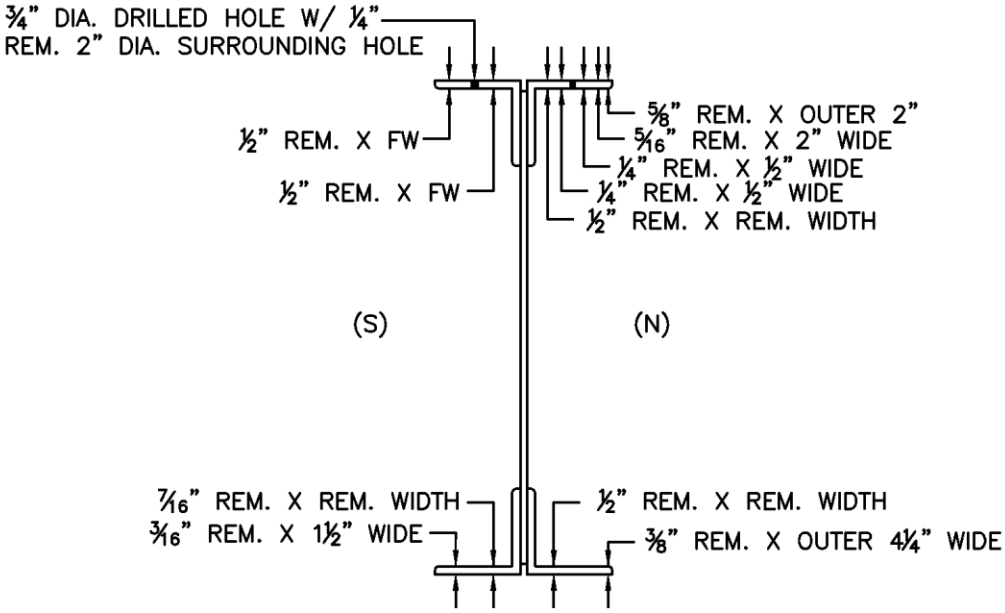

RAILROAD FLOORBEAM 5, TRUSS SPAN 2, 2'-6" EAST OF WEST STRINGER

Sketch 15: Railroad Floorbeam Conditions 2 of 3.

City/Town	B.I.N.	Br. Dept. No.	8 - Structure No.	90 - Inspection Date
Portsmouth / Kittery			**3641 (ME)/251/108 (NH)**	**10/11/11 - 12/14/11**

Sketches

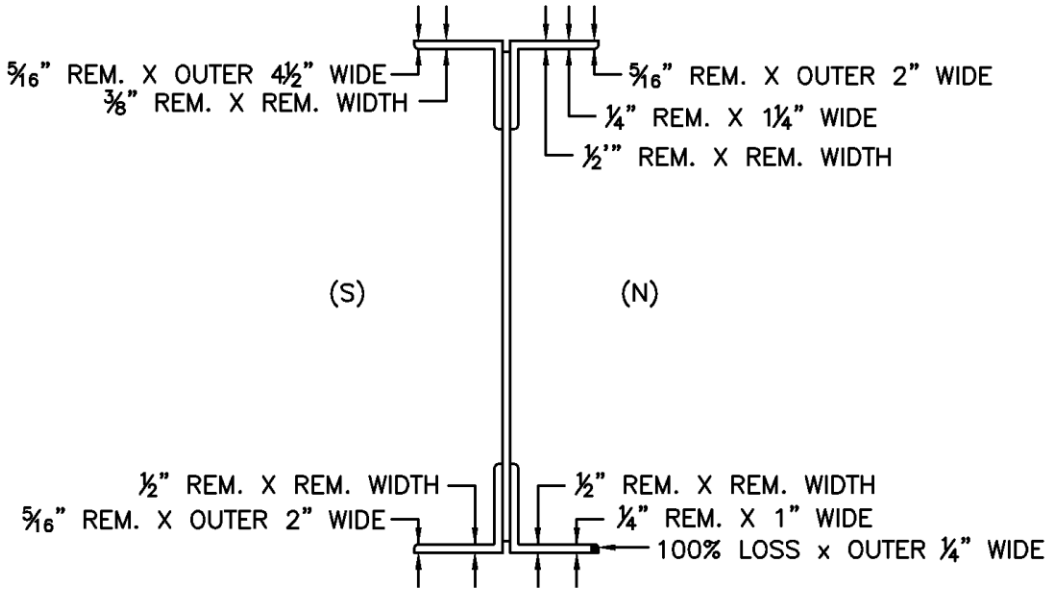

RAILROAD FLOORBEAM 0, TRUSS SPAN 4, AT MIDSPAN

AS-BUILT PROPERTIES:
WEB PLATE = ⅝"x44¼"
FLANGE ANGLES = L8x8x1 1/16

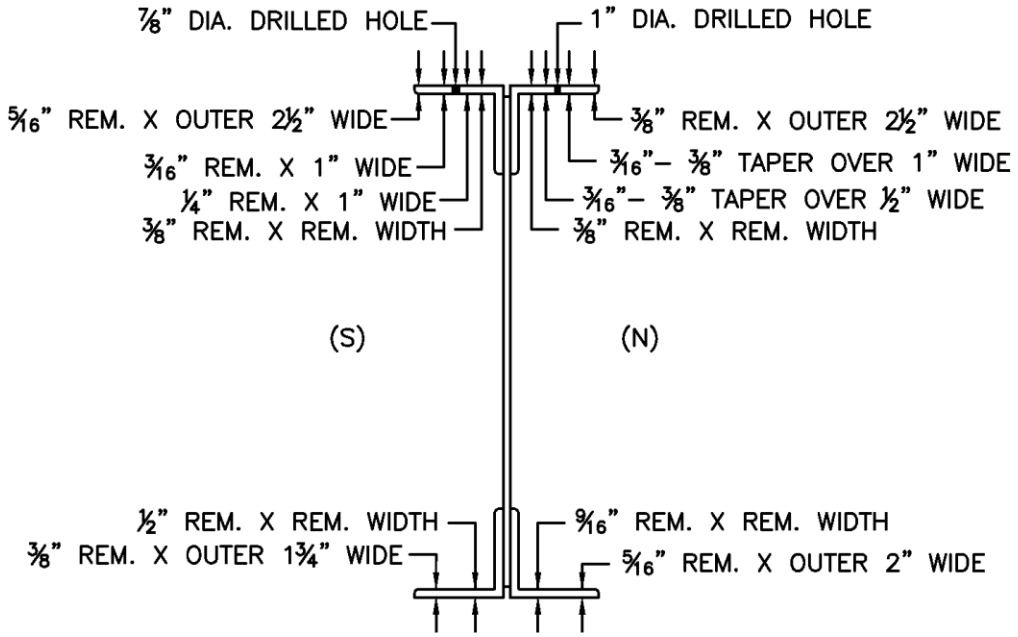

RAILROAD FLOORBEAM 0, TRUSS SPAN 5, AT MIDSPAN

Sketch 16: Railroad Floorbeam Conditions 3 of 3.

City/Town	B.I.N.	Br. Dept. No.	8 - Structure No.	90 - Inspection Date
Portsmouth / Kittery			**3641 (ME)/251/108 (NH)**	**10/11/11 - 12/14/11**

Sketches

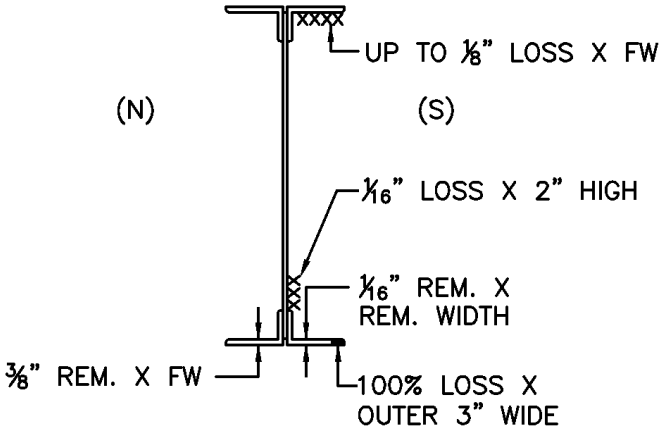

ROADWAY FLOORBEAM 0,
TRUSS SPAN 1, AT MIDSPAN

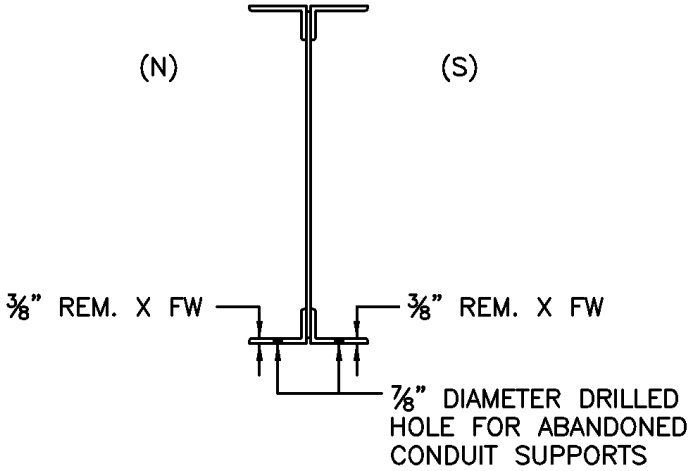

NOTE:
TYPICAL CONDITION AT ABANDONED CONDUIT SUPPORT.

ROADWAY FLOORBEAM 5,
TRUSS SPAN 1, AT 7' FROM EAST END

AS-BUILT PROPERTIES:
WEB PLATE = 3/8"x28 5/8"
FLANGE ANGLES = 5x3 1/2x7/16

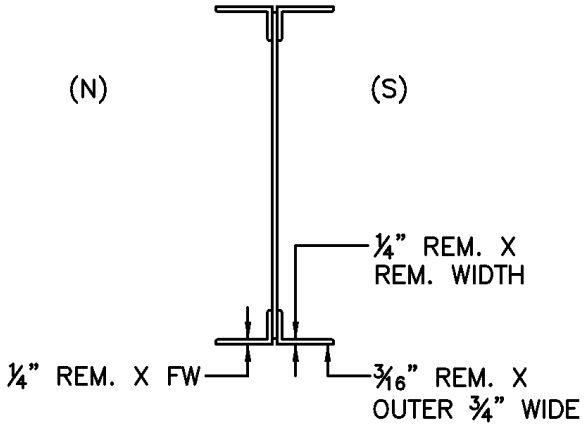

ROADWAY FLOORBEAM 2,
TRUSS SPAN 2, AT MIDSPAN

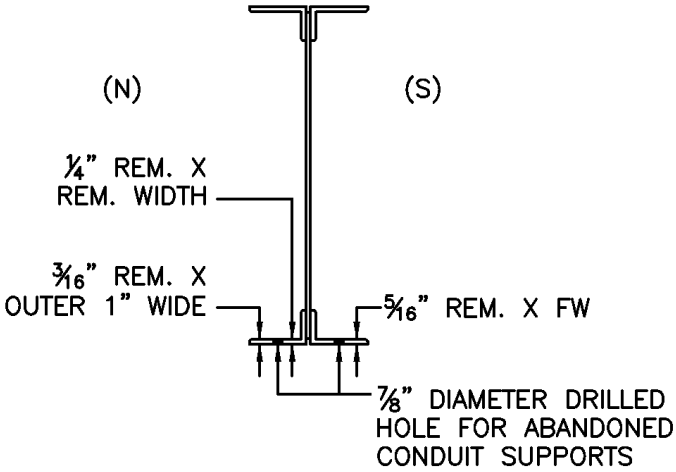

ROADWAY FLOORBEAM 8,
TRUSS SPAN 5, AT 7' FROM EAST END

Sketch 17: Roadway Floorbeam Conditions 1 of 1.

City/Town	B.I.N.	Br. Dept. No.	8 - Structure No.	90 - Inspection Date
Portsmouth / Kittery			**3641 (ME)/251/108 (NH)**	**10/11/11 - 12/14/11**

Sketches

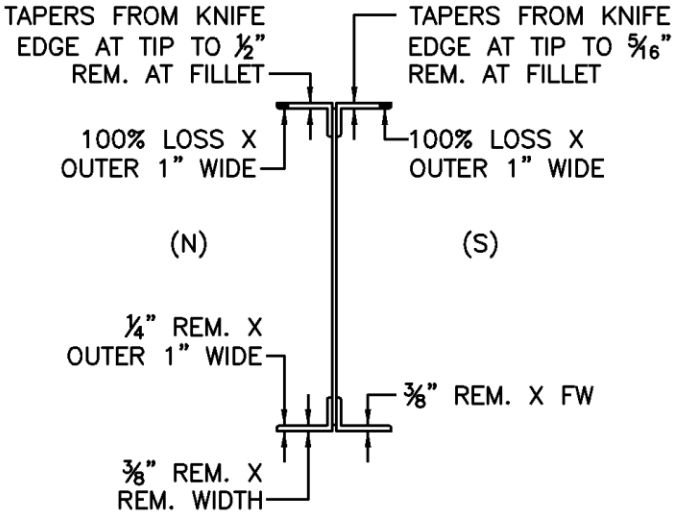

NOTE:
THIS SECTION IS UNDER THE WARNING GATE.

ROADWAY FLOORBEAM 5, EAST CANTILEVER, TRUSS SPAN 2

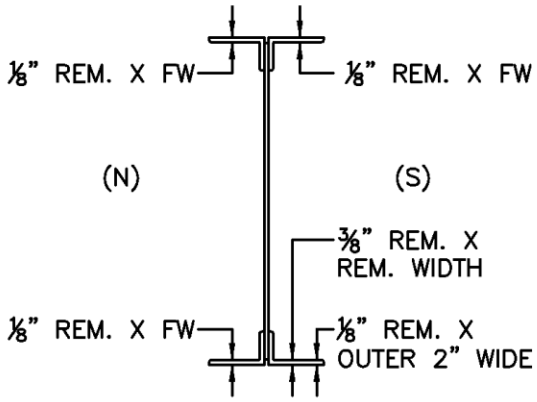

ROADWAY FLOORBEAM 7, WEST CANTILEVER, TRUSS SPAN 3

AS-BUILT PROPERTIES:
WEB PLATE = ⅜"x VARIES (18" TO 28⅝")
FLANGE ANGLES = 5x3½x7/16

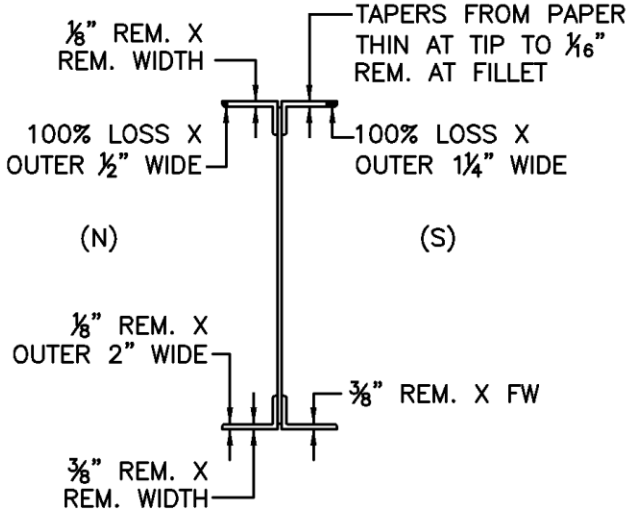

ROADWAY FLOORBEAM 0, EAST CANTILEVER, TRUSS SPAN 4

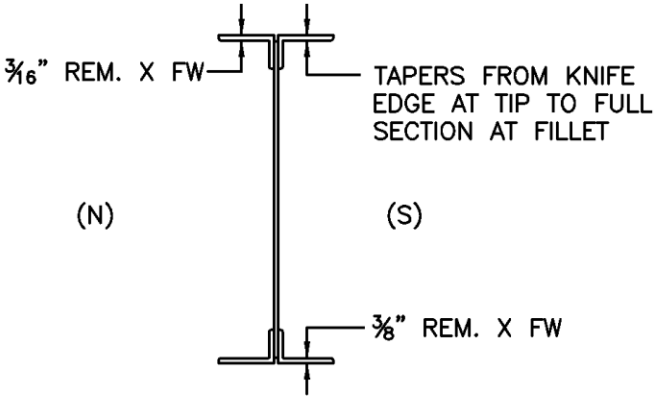

ROADWAY FLOORBEAM 4, WEST CANTILEVER, TRUSS SPAN 4

Sketch 18: Roadway Floorbeam Cantilever Conditions 1 of 1.

City/Town	B.I.N.	Br. Dept. No.	8 - Structure No.	90 - Inspection Date
Portsmouth / Kittery			**3641 (ME)/251/108 (NH)**	**10/11/11 - 12/14/11**

Sketches

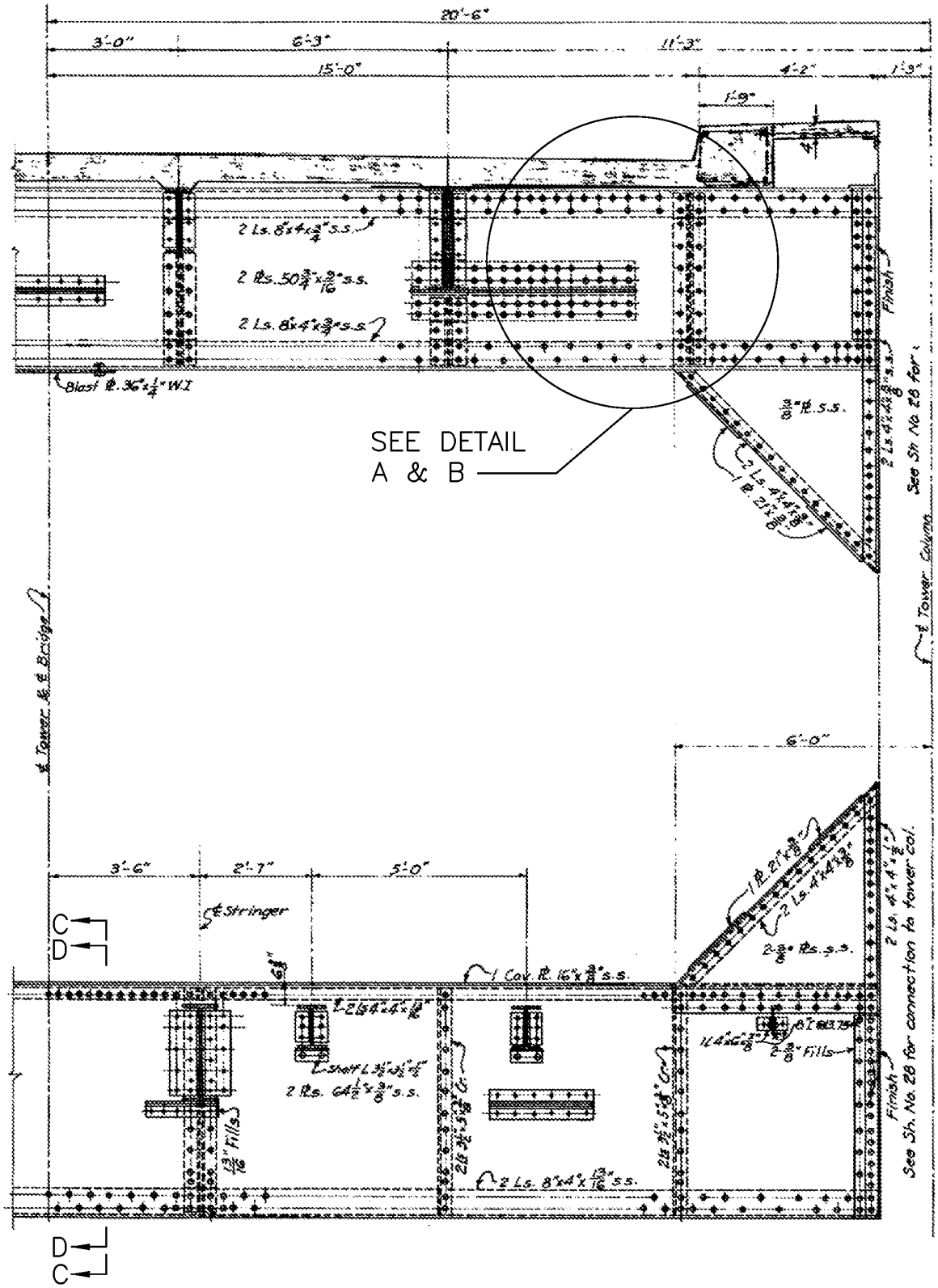

TYPICAL TOWER FLOORBEAM HALF ELEVATION

Sketch 19: Typical Tower Floorbeam Half Elevation.

City/Town	B.I.N.	Br. Dept. No.	8 - Structure No.	90 - Inspection Date
Portsmouth / Kittery			**3641 (ME)/251/108 (NH)**	**10/11/11 - 12/14/11**

Sketches

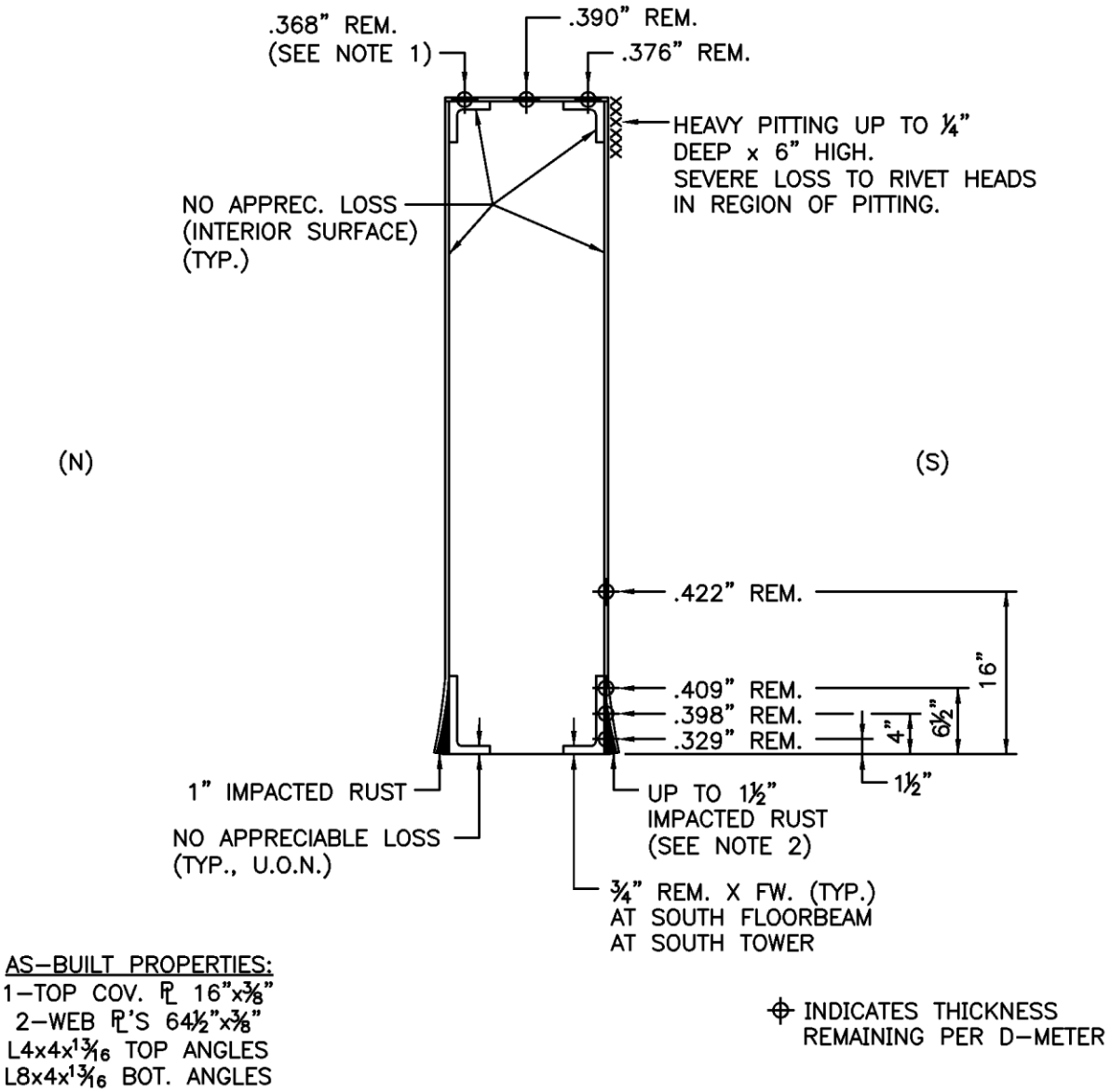

NOTES:

1. THE TIMBER TIES ABOVE THE FLOORBEAM PREVENTED DIRECT ACCESS TO TOP FLANGE AT MIDSPAN. D-METER READINGS WERE TAKEN 5'± EAST OF MIDSPAN WHERE TOP FLANGE WAS EXPOSED. RIVET HEADS ALONG TOP SURFACE OF PLATE TYPICALLY EXHIBIT 50% SECTION LOSS WITH UP TO 75% LOSS TO SOME.
2. TWO RIVETS ALONG LOWER ROW OF SOUTH WEB PLATE HAVE SHEARED HEADS, DUE TO THE IMPACTED RUST DISTORTION.
3. SOUTH FLOORBEAM AT SOUTH TOWER SIMILAR CONDITION (UNLESS OTHERWISE NOTED).

SECTION C-C

NORTH RR FLOORBEAM, NORTH TOWER, AT MIDSPAN

Sketch 20: North Railroad Floorbeam at Midspan, North Tower.

City/Town	B.I.N.	Br. Dept. No.	8 - Structure No.	90 - Inspection Date
Portsmouth / Kittery			**3641 (ME)/251/108 (NH)**	**10/11/11 - 12/14/11**

Sketches

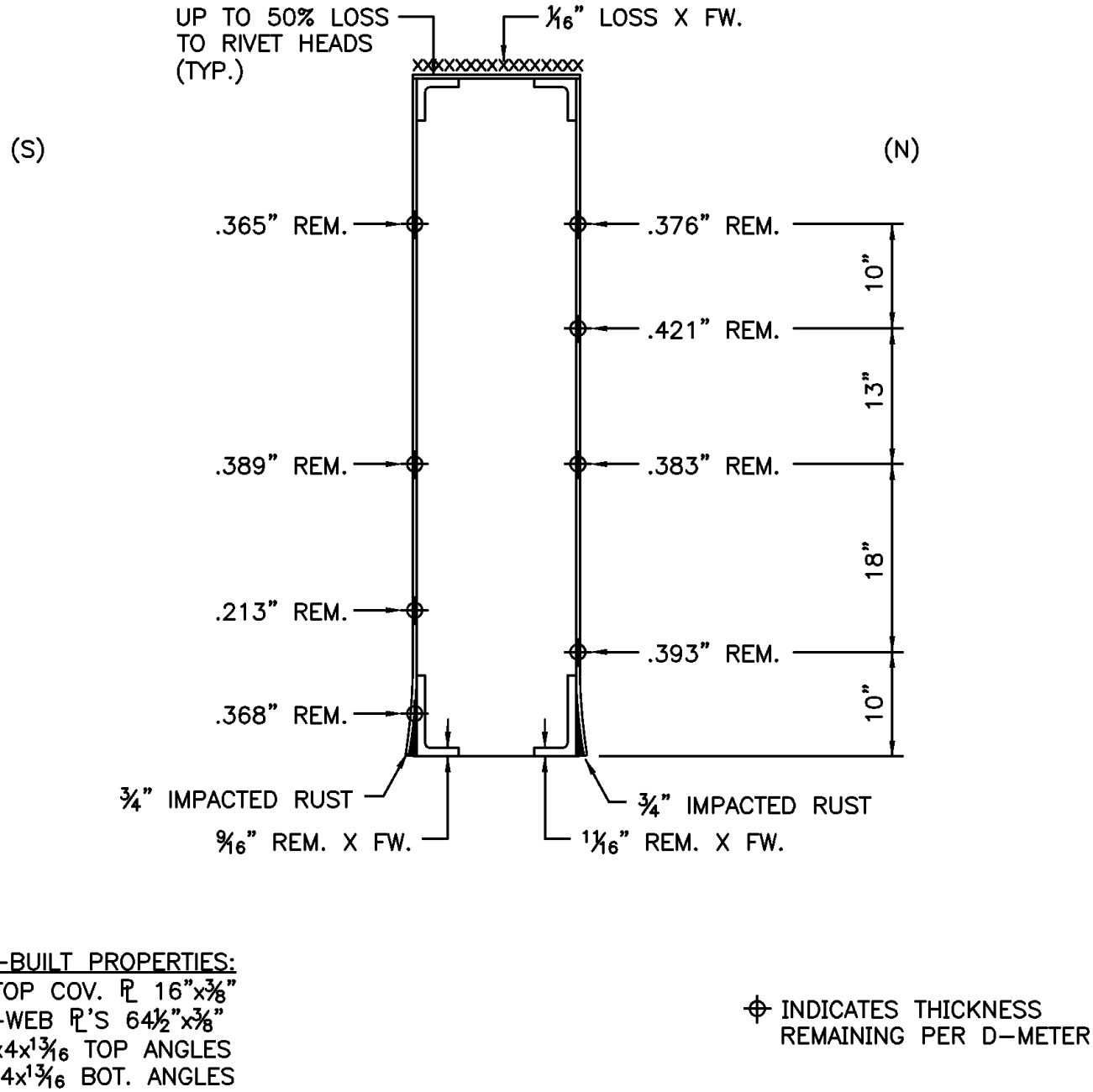

SECTION D-D

NORTH RR FLOORBEAM, SOUTH TOWER, AT MIDSPAN

Sketch 21: North Railroad Floorbeam at Midspan, South Tower.

City/Town	B.I.N.	Br. Dept. No.	8 - Structure No.	90 - Inspection Date
Portsmouth / Kittery			**3641 (ME)/251/108 (NH)**	**10/11/11 - 12/14/11**

Sketches

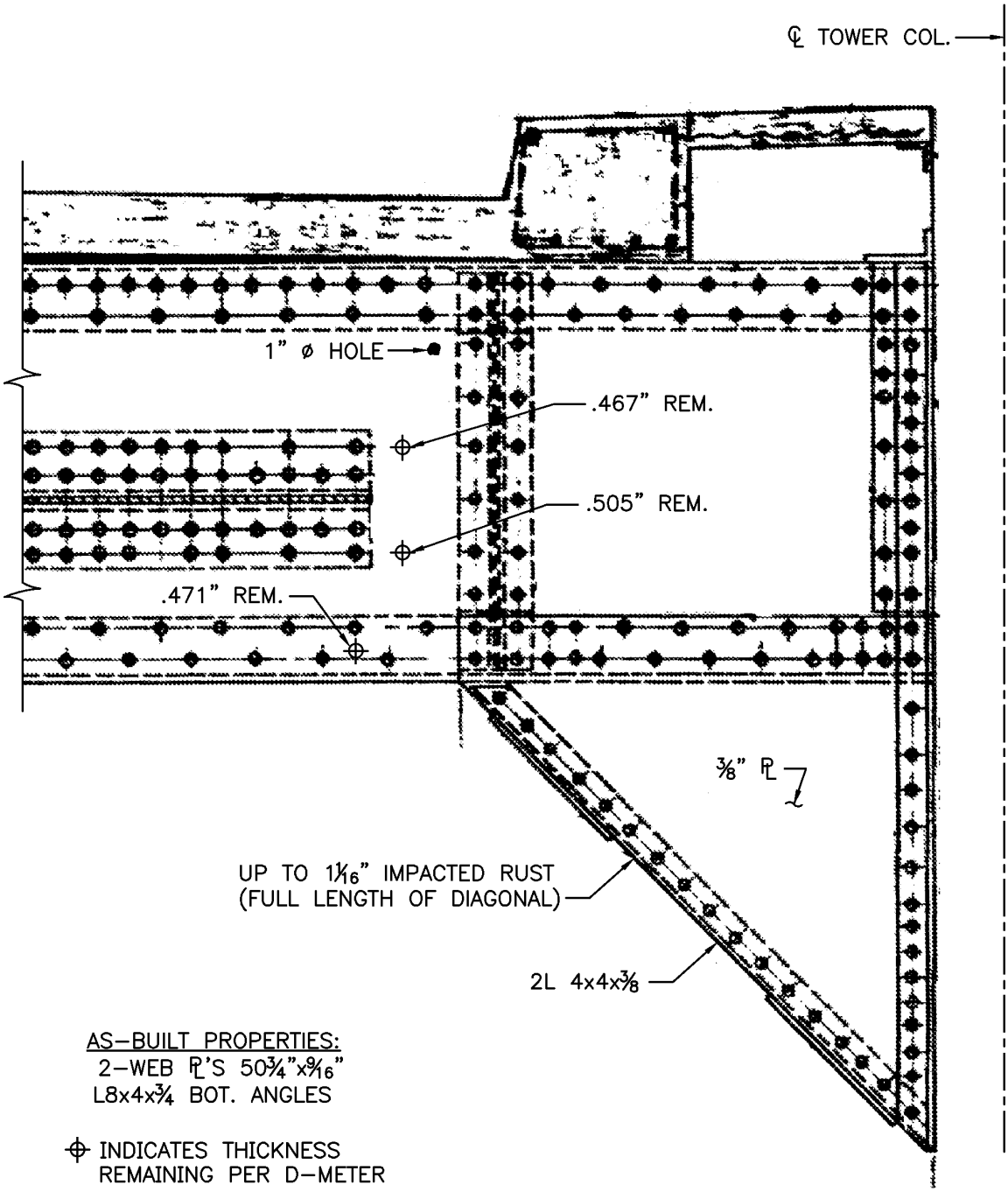

DETAIL A

WEST END OF UPPER NORTH FLOORBEAM, NORTH TOWER (NORTH FACE)

Sketch 22: Detail A - West End of Upper North Floorbeam, North Tower, North Face.

City/Town	B.I.N.	Br. Dept. No.	8 - Structure No.	90 - Inspection Date
Portsmouth / Kittery			**3641 (ME)/251/108 (NH)**	**10/11/11 - 12/14/11**

Sketches

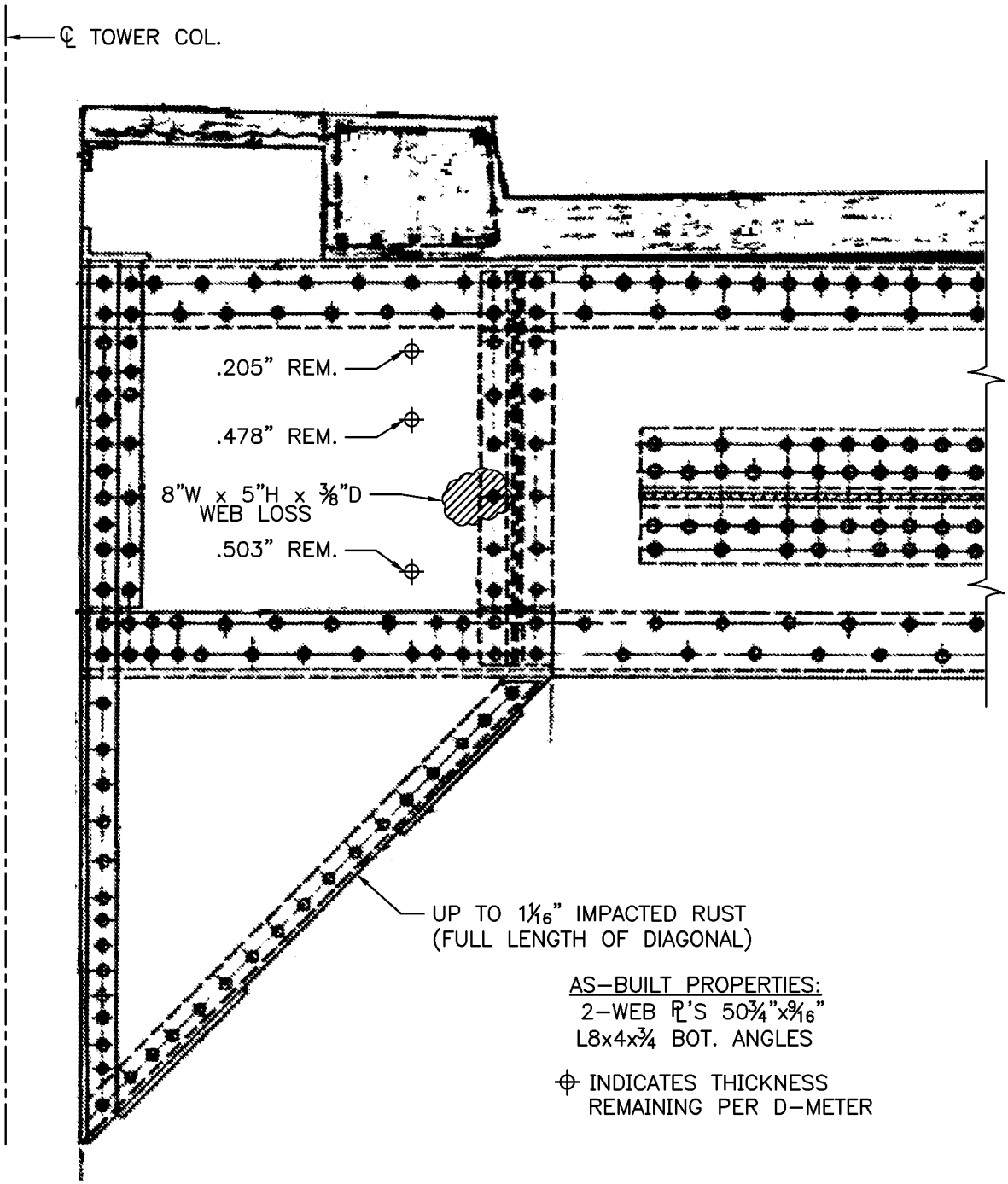

DETAIL B

EAST END OF UPPER NORTH FLOORBEAM, NORTH TOWER (NORTH FACE)

Sketch 23: Detail B - East End of Upper North Floorbeam, North Tower, North Face.

City/Town	B.I.N.	Br. Dept. No.	8 - Structure No.	90 - Inspection Date
Portsmouth / Kittery			**3641 (ME)/251/108 (NH)**	**10/11/11 - 12/14/11**

Sketches

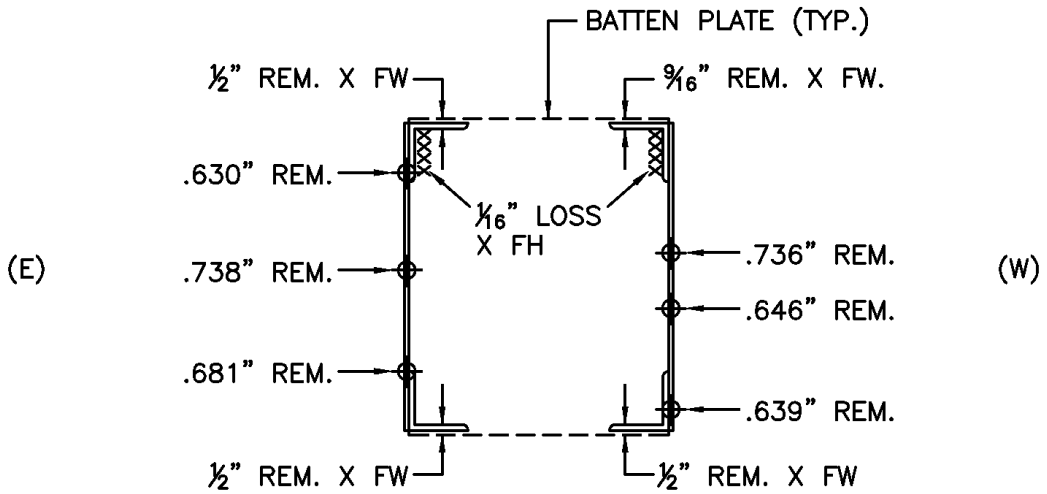

NOTE: LOSS SIMILAR FOR FULL LENGTH OF MEMBER.

TRUSS LOWER CHORD L0L1, TRUSS SPAN 2 WEST, AT MIDSPAN

AS-BUILT PROPERTIES:
L4x4x¾
PL ¾" x 24"
PL ¾" x 15" (INSIDE WEB) AT L4L5 ONLY
BATTEN PL: ⅜" x 14"

⊕ INDICATES THICKNESS REMAINING PER D-METER

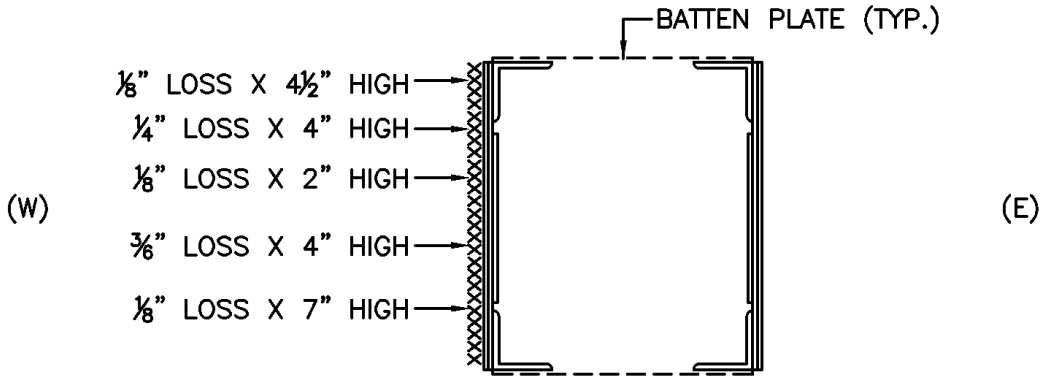

TRUSS LOWER CHORD L4L5, TRUSS SPAN 4 WEST, AT L4

Sketch 24: Truss Lower Chord Conditions 1 of 2.

City/Town	B.I.N.	Br. Dept. No.	8 - Structure No.	90 - Inspection Date
Portsmouth / Kittery			**3641 (ME)/251/108 (NH)**	**10/11/11 - 12/14/11**

Sketches

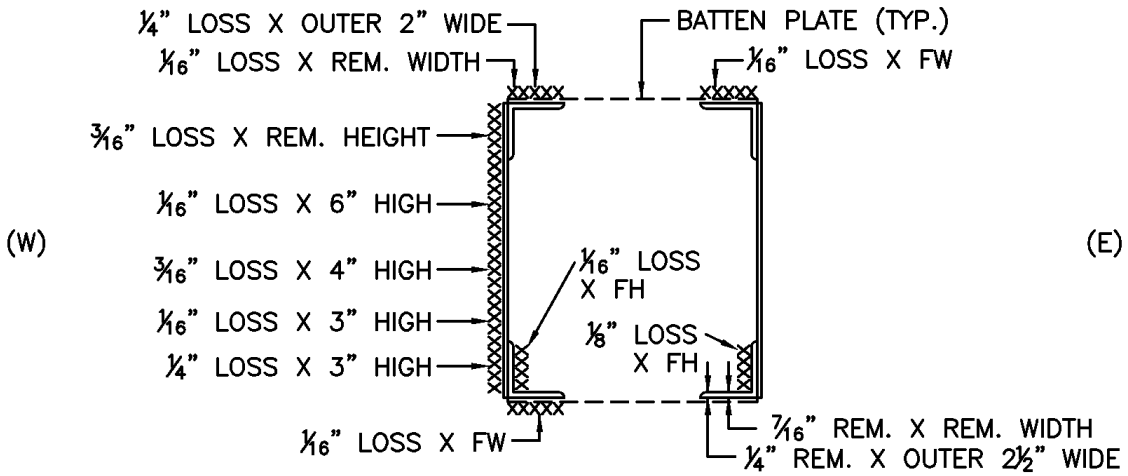

NOTE: ALL RIVETS AND BATTEN PLATES EXHIBIT HEAVY DETERIORATION.

TRUSS LOWER CHORD L7L8, TRUSS SPAN 4 WEST, AT L8

AS-BUILT PROPERTIES:
L4x4x¾
PL ¾" x 24"
PL ¾" x 15" (INSIDE WEB) AT L3L4 ONLY
BATTEN PL: ⅜" x 14"

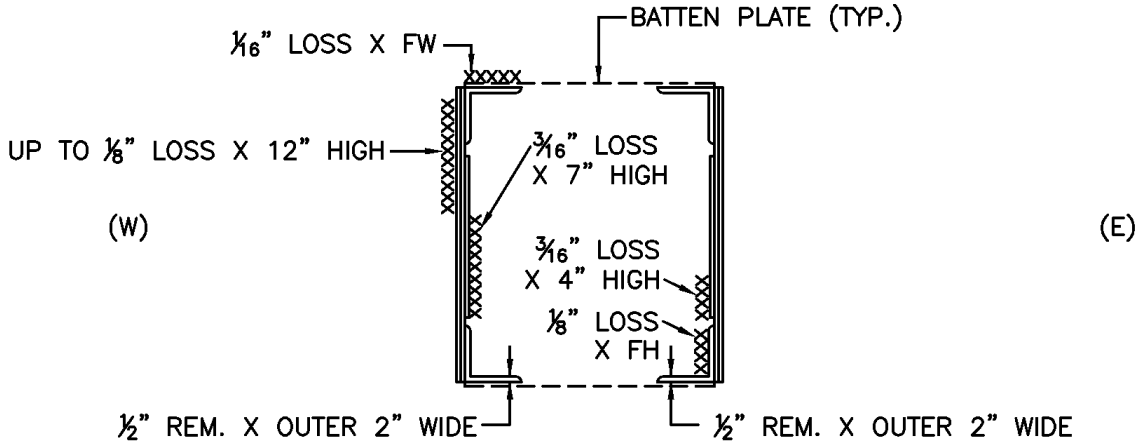

TRUSS LOWER CHORD L3L4, TRUSS SPAN 5 WEST, NEAR L4

Sketch 25: Truss Lower Chord Conditions 2 of 2.

City/Town	B.I.N.	Br. Dept. No.	8 - Structure No.	90 - Inspection Date
Portsmouth / Kittery			**3641 (ME)/251/108 (NH)**	**10/11/11 - 12/14/11**

Sketches

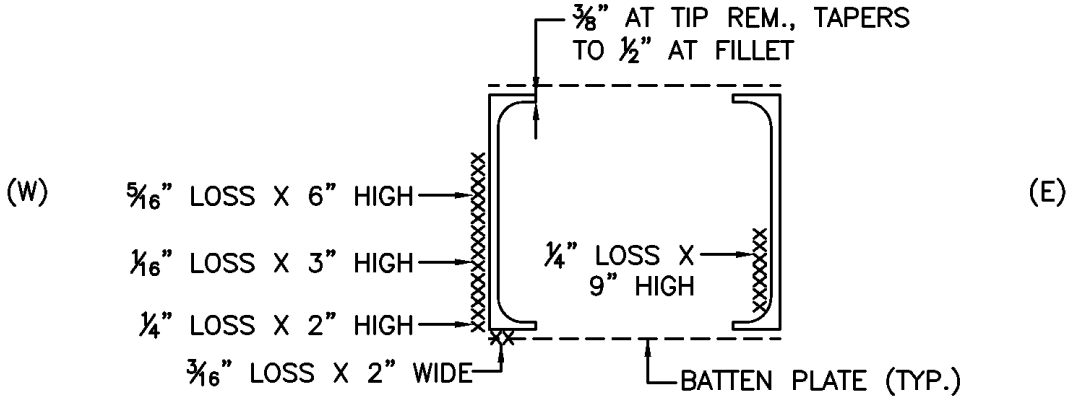

NOTE: LOSSES TYPICAL FOR LOWER 3/4 OF MEMBER. UP TO 80% TOP AND 20% BOTTOM LACING BARS WITH HEAVY DETERIORATION.

TRUSS WEB DIAGONAL L4U5, TRUSS SPAN 1 WEST, AT MIDHIGHT

⊕ INDICATES THICKNESS REMAINING PER D-METER

AS-BUILT PROPERTIES (18[45.8):

d = 18.000"
bf = 4.000"
tf = 0.625"
tw = 0.500"

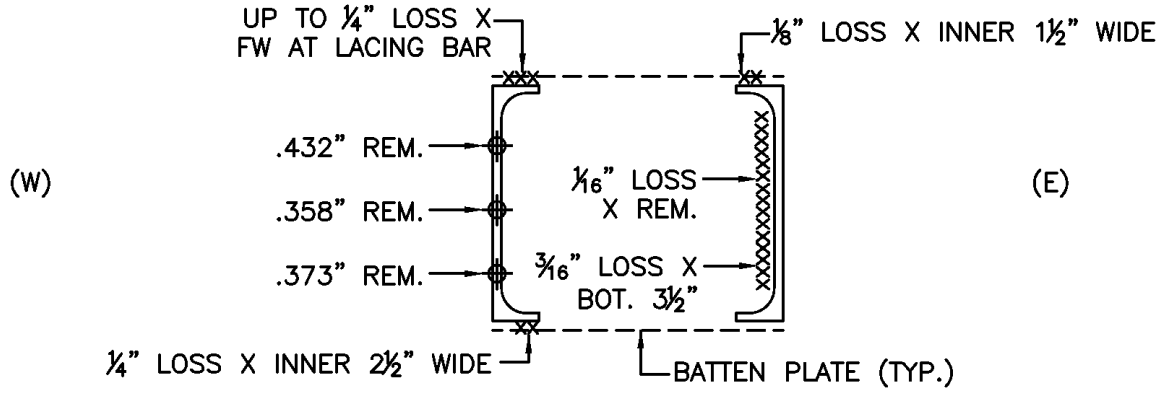

NOTE: LOSSES SIMILAR FOR FULL HEIGHT OF MEMBER.

TRUSS WEB DIAGONAL L4U5, TRUSS SPAN 2 WEST, AT BOTTOM QUARTER POINT

Sketch 26: Truss Web Diagonal Conditions 1 of 2.

City/Town	B.I.N.	Br. Dept. No.	8 - Structure No.	90 - Inspection Date
Portsmouth / Kittery			**3641 (ME)/251/108 (NH)**	**10/11/11 - 12/14/11**

Sketches

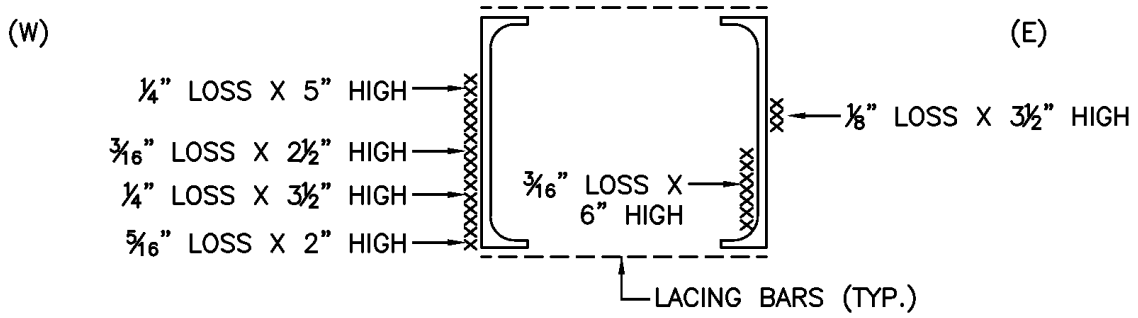

AS-BUILT PROPERTIES (18[45.8):

d = 18.000"
bf = 4.000"
tf = 0.625"
tw = 0.500"

NOTE: 75% OF LACING BARS EXHIBIT HEAVY DETERIORATION.

TRUSS WEB DIAGONAL L4U3, TRUSS SPAN 4 WEST, AT L4

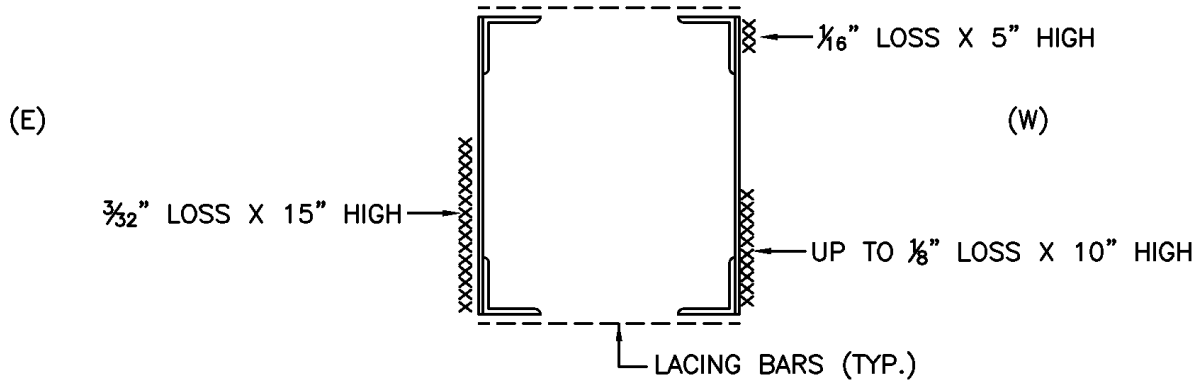

AS-BUILT PROPERTIES:

L4x4x5/8
PL 1⅜" x 24"

NOTE: LOSSES SIMILAR FOR BOTTOM HALF OF MEMBER. LACING BARS AND LOWER ROW RIVETS (E & W SIDES) EXHIBIT HEAVY DETERIORATION.

TRUSS WEB DIAGONAL L8U7, TRUSS SPAN 4 EAST, NEAR L8

Sketch 27: Truss Web Diagonal Conditions 2 of 2.

City/Town	B.I.N.	Br. Dept. No.	8 - Structure No.	90 - Inspection Date
Portsmouth / Kittery			**3641 (ME)/251/108 (NH)**	**10/11/11 - 12/14/11**

Sketches

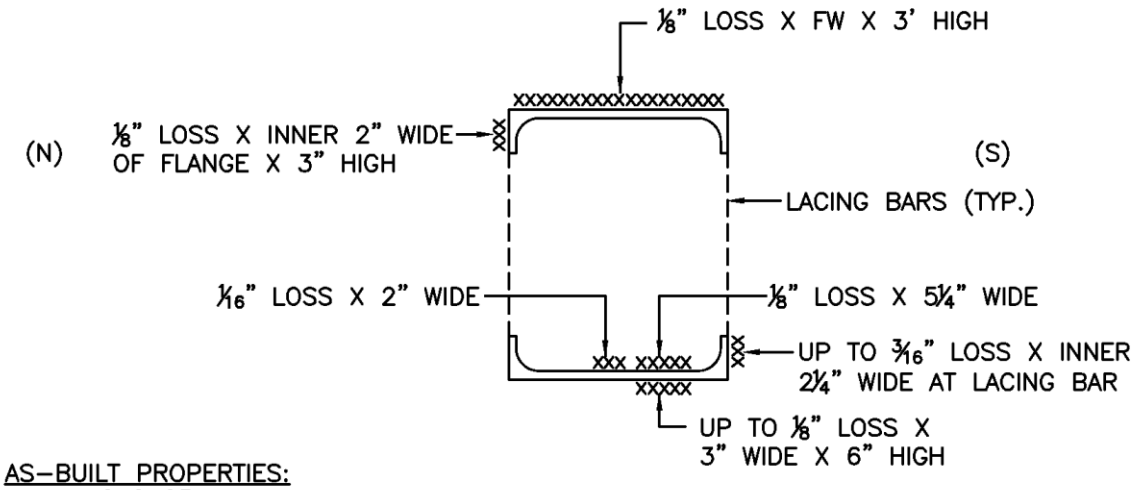

AS-BUILT PROPERTIES:
C12X25
LACING BARS: 7/16" X 2½"
END TIE PLATES: ⅜" X 21"
DEPTH = 1'-8¼"

TRUSS WEB VERTICAL L4U4, TRUSS SPAN 2 WEST, NEAR L4

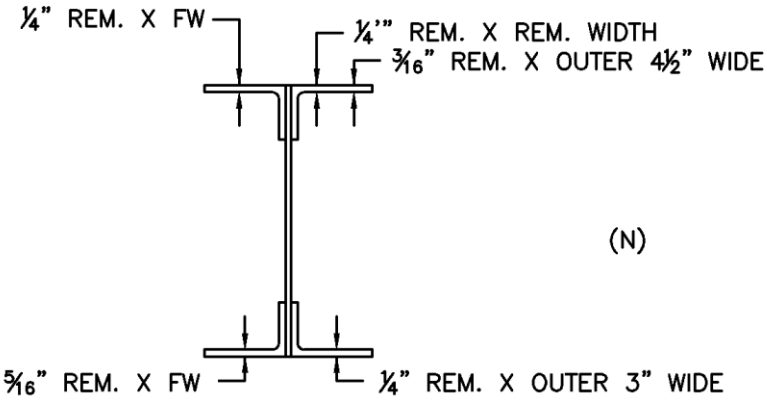

AS-BUILT PROPERTIES:
L6x4x⅜
PL ⅜" x 20"
DEPTH = 1'-8¼"

TRUSS WEB VERTICAL L3U3, TRUSS SPAN 2 WEST, AT L3

Sketch 28: Truss Web Vertical Conditions 1 of 1.

City/Town	B.I.N.	Br. Dept. No.	8 - Structure No.	90 - Inspection Date
Portsmouth / Kittery			**3641 (ME)/251/108 (NH)**	**10/11/11 - 12/14/11**

Photos

Photo 1: East Truss Elevation, Looking Northwest.

Photo 2: Top of Roadway Deck, Truss Span 1, Looking North.

City/Town	B.I.N.	Br. Dept. No.	8 - Structure No.	90 - Inspection Date
Portsmouth/Kittery			**3641 (ME)/251/108 (NH)**	**10/11/11 - 12/14/11**

Photos

Photo 3: Top of Railroad Deck, Truss Span 2, Looking North

Photo 4: Truss Span 3 and Lift Towers, Looking Southwest.

City/Town	B.I.N.	Br. Dept. No.	8 - Structure No.	90 - Inspection Date
Portsmouth/Kittery			**3641 (ME)/251/108 (NH)**	**10/11/11 – 12/14/11**

Photos

Photo 5: South Half of East Truss Span 3, Looking Southwest.

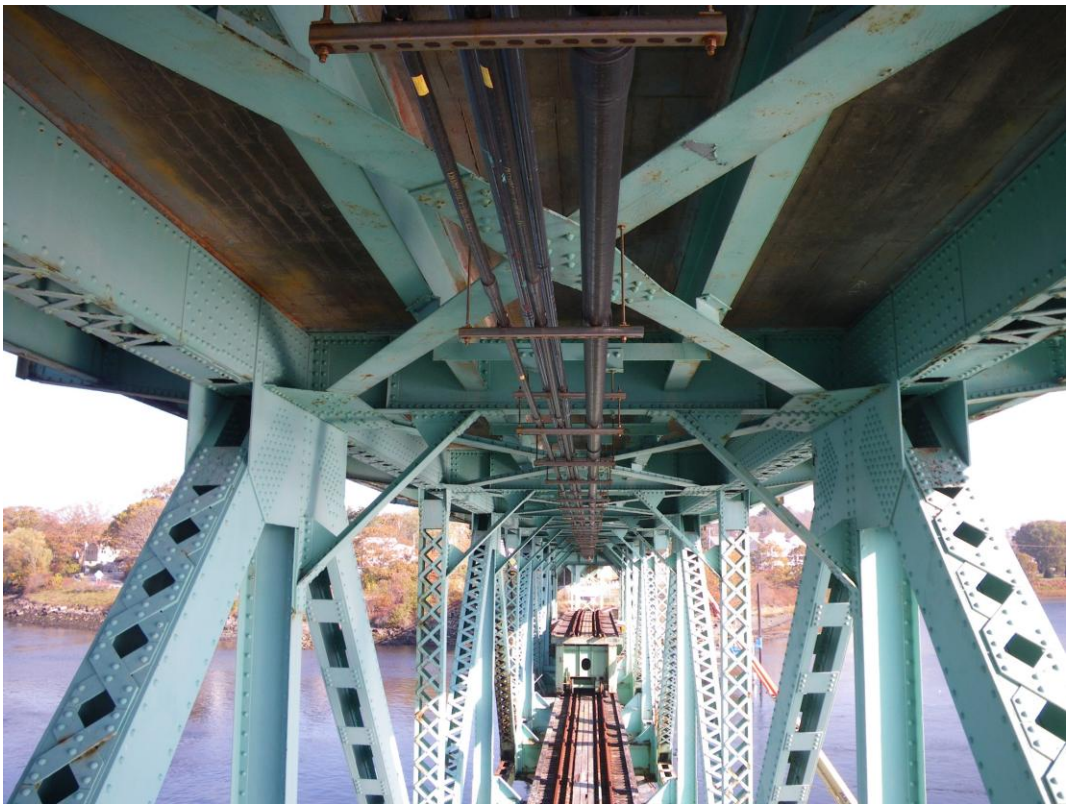

Photo 6: Underside of Upper Floor System, Truss Span 5, Looking North – retractable span resting on truss span 5. Note conduits supported by floorbeams.

City/Town	B.I.N.	Br. Dept. No.	8 - Structure No.	90 - Inspection Date
Portsmouth / Kittery			**3641 (ME)/251/108 (NH)**	10/11/11 -12/14/11

Photos

Photo 7: Underside of Lower Floor System, Truss Span 3, Looking Northwest.

Photo 8: Pier 16, South Face, Looking Northeast – Note spall on southwest corner.

City/Town	B.I.N.	Br. Dept. No.	8 - Structure No.	90 - Inspection Date
Portsmouth / Kittery			**3641 (ME)/251/108 (NH)**	10/11/11 – 12/14/11

Photos

Photo 9: Weight Posting Sign, South Approach – 20 ton weight limit.

Photo 10: Wearing Surface, Truss Span 1, Looking East – Transverse crack.

City/Town	B.I.N.	Br. Dept. No.	8 - Structure No.	90 - Inspection Date
Portsmouth / Kittery			**3641 (ME)/251/108 (NH)**	10/11/11 – 12/14/11

Photos

Photo11: Wearing Surface along Pier 15 Deck joint, Truss Span 1, Looking East – Spalling along joint. Note torn and dislodged joint seal with joint opening filling with sand.

Photo 12: Wearing Surface/Top of Deck, Southbound, Truss Span 2, Looking North - Numerous concrete repairs.

City/Town	B.I.N.	Br. Dept. No.	8 - Structure No.	90 - Inspection Date
Portsmouth / Kittery			**3641 (ME)/251/108 (NH)**	**10/11/11 – 12/14/11**

Photos

Photo 13: Wearing Surface adjacent to East Curb, Truss Span 1, Looking Southeast - Ponding water. Note curb spalling with exposed reinforcement.

Photo 14: Underside of Deck between East Roadway Springer and East Truss, Bay 8, Truss Span 5, Looking North – Spall with exposed reinforcement.

City/Town	B.I.N.	Br. Dept. No.	8 - Structure No.	90 - Inspection Date
Portsmouth / Kittery			**3641 (ME)/251/108 (NH)**	**10/11/11 – 12/14/11**

Photos

Photo 15: Underside of Deck between East Curb Stringer and East Truss, Bay 4, Truss Span 5, Looking North – Spall with exposed reinforcement.

Photo 16: Underside of Deck at Roadway Floorbeam4, East End, Bay 4, Truss Span 5, Looking North – Gap between top flange of floorbeam and the underside of deck.

City/Town	B.I.N.	Br. Dept. No.	8 - Structure No.	90 - Inspection Date
Portsmouth / Kittery			**3641 (ME)/251/108 (NH)**	**10/11/11 -12/14/11**

Remarks & Photos

Photo 17: Underside of Deck at West Floorbeam 4 Cantilever, Bay 5, Truss Span 5 – Looking Southeast – Gap between top flange of floorbeam and the underside of deck.

Photo 18: Timber Railroad Deck at East End, Bay 7, Truss Span 1, Looking Northwest – Through splits

City/Town	B.I.N.	Br. Dept. No.	8 - Structure No.	90 - Inspection Date
Portsmouth / Kittery			**3641 (ME)/251/108 (NH)**	10/11/11 – 12/14/11

Photos

Photo 19: Stay-In-Place Forms under Control House at Floorbeam 6, Bay 6, Truss Span 2, Looking North – Heavy rust and moderate section loss.

Photo 20: East Curb at South Quarter Point of Span, Truss Span 5, Looking South – Spall with exposed reinforcement.

City/Town	B.I.N.	Br. Dept. No.	8 - Structure No.	90 - Inspection Date
Portsmouth / Kittery			**3641 (ME)/251/108 (NH)**	**10/11/11 - 12/14/11**

Photos

Photo 21: East Curb at North Third Point of Span, Truss Span 5, Looking South – Spall with exposed reinforcement.

Photo 22: West Safetywalk at Pier 19 Deck joint, Truss Span 5, Looking West – Spall with exposed joint armor.

City/Town	B.I.N.	Br. Dept. No.	8 - Structure No.	90 - Inspection Date
Portsmouth/Kittery			**3641 (ME)/251/108 (NH)**	**10/11/11 - 12/14/11**

Photos

Photo 23: West Bridge Railing at Control House, Truss Span 2, Looking Northwest – Tube steel rub rail retrofit. Note 100% section loss and impacted rust between the bottom of the top pipe rail and the top of the picket panels and 100% section loss to the top of the picket panel.

Photo 24: West Bridge Railing, Truss Span 2, Looking North – Original rails posts with 100% web section loss by full height.

City/Town	B.I.N.	Br. Dept. No.	8 - Structure No.	90 - Inspection Date
Portsmouth/Kittery			**3641 (ME)/251/108 (NH)**	**10/11/11 – 12/14/11**

Photos

Photo 25: West Bridge Railing at Warning Gate Platform, Truss Span 2, Looking West – Through bolt for retrofit at location of 100% web section loss to original post. Note 50% section loss to through bolt.

Photo 26: West Bridge Rail, Truss Span 3, Looking Northwest – 100% section loss to top pipe rail by full length between posts.

City/Town	B.I.N.	Br. Dept. No.	8 - Structure No.	90 - Inspection Date
Portsmouth / Kittery			**3641 (ME)/251/108 (NH)**	10/11/11 -12/14/11

Photos

Photo 27 West Bridge Railing Truss Span 1 – Non-Functional collar at rail post. Note 100%.section loss to top rail at collar location.

Photo 28: Scupper Downspout adjacent to East curb Stringer, Midspan, Bay 2, Truss Span 2, Looking South – 100% section loss on all sides.

City/Town	B.I.N.	Br. Dept. No.	8 - Structure No.	90 - Inspection Date
Portsmouth / Kittery			**3641 (ME)/251/108 (NH)**	10/11/11 – 12/14/11

Photos

Photo 29: Scupper Downspout adjacent to East Curb Stringer, Midspan, Bay 7, Truss Span 2, .Looking Northeast – 100& section loss causing severe deterioration to the adjacent curb stringer.

Photo 30: Conduit along West Fascia, Truss Span 2, Looking South – Disconnected connection clips.

City/Town	B.I.N.	Br. Dept. No.	8 - Structure No.	90 - Inspection Date
Portsmouth / Kittery			**3641 (ME)/251/108 (NH)**	10/11/11 – 12/14/11

Photos

Photo 31: Pier 19 Deck Joint, Southbound, Looking East – Heavy rust, heavy plow damage and moderate sand and debris accumulation. Note welded repairs of finger.

Photo 32: Pier 16 Deck Joint at West Shoulder, Looking East – Joint Fingers in contact and protruding upward.

City/Town	B.I.N.	Br. Dept. No.	8 - Structure No.	90 - Inspection Date
Portsmouth / Kittery			**3641 (ME)/251/108 (NH)**	**10/11/11 – 12/14/11**

Photos

Photo 33: Pier Deck Joint in West Safetywalk – 100% section loss of sliding plates.

Photo 34: Pier 17 Deck Joint in East Safetywalk – Downward rotation.

City/Town	B.I.N.	Br. Dept. No.	8 - Structure No.	90 - Inspection Date
Portsmouth / Kittery			**3641 (ME)/251/108 (NH)**	**10/11/11 – 12/14/11**

Photos

Photo 35: Neoprene Joint Seal near pier 18, Truss Span 4, Looking South – Joint seal torn and protruding upwards.

Photo 36: Warning Gate Platform on Fascia, Truss Span 4 – 100% Section loss.

City/Town	B.I.N.	Br. Dept. No.	8 - Structure No.	90 - Inspection Date
Portsmouth / Kittery			**3641 (ME)/251/108 (NH)**	**10/11/11 -12/14/11**

Remarks & Photos

Photo 37: Grating between Control House and Ancillary Building, Truss Span 2, Looking West – Repair consisting of thin plate and tie wire.

Photo 38: Control House Framing between panel points 7 and 8, Truss Span 2, Looking Southeast - Heavy rust and areas of moderate section loss.

City/Town	B.I.N.	Br. Dept. No.	8 - Structure No.	90 - Inspection Date
Portsmouth / Kittery			**3641 (ME)/251/108 (NH)**	10/11/11 – 12/14/11

Photos

Photo 39: Access Stair South Support Channel, Landing Platform at Mid-height of West Truss Diagonal U7L8, Truss Span 5, North Face - 100% web section loss.

Photo 40: Access Stair South Support Channel, Landing Platform at Mid-height of West Truss Diagonal U7L8, Truss Span 5 – 100% top flange section loss. Note 100% section loss to stair stringer.

City/Town	B.I.N.	Br. Dept. No.	8 - Structure No.	90 - Inspection Date
Portsmouth / Kittery			**3641 (ME)/251/108 (NH)**	**10/11/11 - 12/14/11**

Photos

Photo 41: West Railroad Stringer, East Face Bay 1 Near South ¼ point Span 5 – Top flange section loss.

Photo 42: East Railroad Stringer, East Face, Bay 8 Near Midspan, Truss Span 4 – Top Flange section loss.

City/Town	B.I.N.	Br. Dept. No.	8 - Structure No.	90 - Inspection Date
Portsmouth/Kittery			**3641 (ME)/251/108 (NH)**	**10/11/11 - 12/14/11**

Photos

Photo 43: West Railroad Stringer, West Face, Bay 2 at Midspan, Truss Span 2 – Top flange section loss.

Photo 44: West Railroad Stringer, East Face Bay 4 at Midspan, Truss Span 5 – Bottom flange and web loss.

City/Town	B.I.N.	Br. Dept. No.	8 - Structure No.	90 - Inspection Date
Portsmouth/Kittery			**3641 (ME)/251/108 (NH)**	**10/11/11 – 12/14/11**

Photos

Photo 45: East Railroad Stringer, Bay 8 at Midspan, Truss Span 2 – Top flange section loss.

Photo 46: West Railroad Stringer, East Face, Bay 1 at South End, Truss Span 3 – Bottom flange sections loss and deteriorated connection angles.

City/Town	B.I.N.	Br. Dept. No.	8 - Structure No.	90 - Inspection Date
Portsmouth / Kittery			**3641 (ME)/251/108 (NH)**	10/11/11 -12/14/11

Photos

Photo 47 East Roadway Stringer at Floorbeam 3, Bay 4, Truss Span 4, West Face – Misc. rivets filling drilled holes in the web.

Photo 48: West Curb Stringer at Floorbeam 0, Bay 1, Truss Span 4, East Face – Corrosion hole in the web.

City/Town	B.I.N.	Br. Dept. No.	8 - Structure No.	90 - Inspection Date
Portsmouth / Kittery			**3641 (ME)/251/108 (NH)**	10/11/11 – 12/14/11

Photos

Photo 49: East Curb Stringer at Floorbeam 8, Bay 8, Truss Span 2, West Face - Web Section loss and 100% top flange section loss.

Photo 50: East Curb Stringer at Midspan, Bay 7, Truss Span 2, West Face, Looking North – 100% bottom flange section loss.

City/Town	B.I.N.	Br. Dept. No.	8 - Structure No.	90 - Inspection Date
Portsmouth / Kittery			**3641 (ME)/251/108 (NH)**	10/11/11 – 12/14/11

Photos

Photo 51: East Curb Stringer at Midspan, Bay 1, Truss Span 3, West Face, Looking Southeast – 100% bottom flange section loss.

Photo 52: East Fascia Stringer at Floorbeam 2, Bay 2, Truss Span 2, East Face – Web and bottom flange section losses.

City/Town	B.I.N.	Br. Dept. No.	8 - Structure No.	90 - Inspection Date
Portsmouth / Kittery			**3641 (ME)/251/108 (NH)**	**10/11/11 – 12/14/11**

Photos

Photo 53: East Fascia Stringer at Floorbeam 5, Bay 5 , Truss Span 2, East Face, Looking North - 100% web section loss. Note 100% section loss of the floorbeam cantilever top flange.

Photo 54: East Fascia Stringer at Floorbeam 5, Bay 5, Truss Span 1, West Face – Web section loss.

City/Town	B.I.N.	Br. Dept. No.	8 - Structure No.	90 - Inspection Date
Portsmouth / Kittery			**3641 (ME)/251/108 (NH)**	**10/11/11 – 12/14/11**

Photos

Photo 55: West Railroad Stringer, South Tower, Looking North – Severe top & bottom flange section loss. Note added steel support column.

Photo 56: East Railroad Stringer, North Tower, East Face – Close-up view of severe top flange section loss.

City/Town	B.I.N.	Br. Dept. No.	8 - Structure No.	90 - Inspection Date
Portsmouth / Kittery			**3641 (ME)/251/108 (NH)**	**10/11/11 -12/14/11**

Remarks & Photos

Photo 57: East Railroad Walkway Stringer, South Tower, Looking North – Areas of 100% section loss to outer edge of bottom flange at northerly 1/3 of span.

Photo 58: Floor System Bracing Gusset Plate at Stringer Cross Frame, Bay 5, Near Floorbeam 4 – Severe section loss.

City/Town	B.I.N.	Br. Dept. No.	8 - Structure No.	90 - Inspection Date
Portsmouth / Kittery			**3641 (ME)/251/108 (NH)**	10/11/11 – 12/14/11

Photos

Photo 59: Floor System, Bracing, Bay 2, Truss Span 3 – Heavy impacted rust between vertical angle legs.

Photo 60: Railroad Floor System Bracing, Bay 1, Truss Span 2 – Heavy impacted rust between vertical angle legs.

City/Town	B.I.N.	Br. Dept. No.	8 - Structure No.	90 - Inspection Date
Portsmouth / Kittery			**3641 (ME)/251/108 (NH)**	**10/11/11 - 12/14/11**

Photos

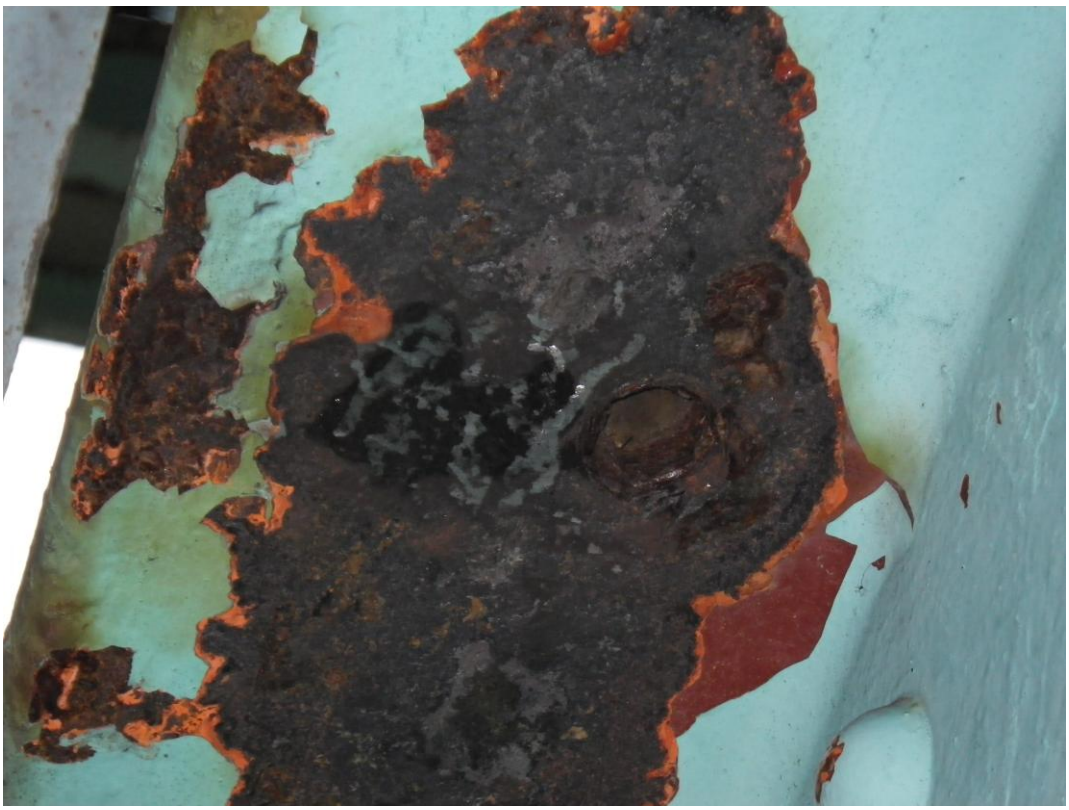

Photo 61: Railroad Floorbeam 8 at Midspan, Truss Span 2, North Face – Top flange section loss.

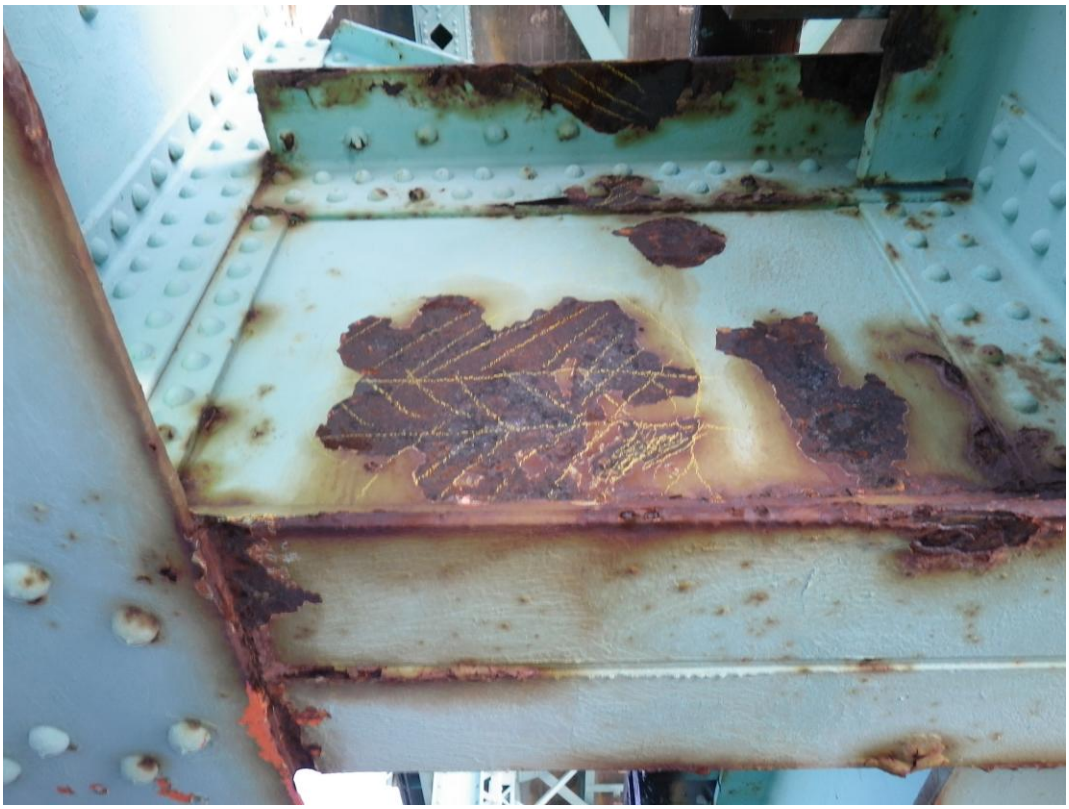

Photo 62: Railroad Floorbeam 4 at West End, Truss Span 4, South Face - Web plate section loss.

City/Town	B.I.N.	Br. Dept. No.	8 - Structure No.	90 - Inspection Date
Portsmouth/Kittery			**3641 (ME)/251/108 (NH)**	**10/11/11 - 12/14/11**

Photos

Photo 63: Railroad Floorbeam 0 at Centering Casting, Truss Span 3, North Face – Heavy rust with section loss.

Photo 64: Railroad Floorbeam 0, West End Strut, Truss Span 3, South Plate, North Face - Heavy rust with heavy section loss.

City/Town	B.I.N.	Br. Dept. No.	8 - Structure No.	90 - Inspection Date
Portsmouth/Kittery			**3641 (ME)/251/108 (NH)**	**10/11/11 – 12/14/11**

Photos

Photo 65: Railroad Floorbeam 0, Truss Span 3, Looking South - Heavy rust. Note lift Span opening.

Photo 66: Railroad Floorbeam 8, Truss Span 3, at East Truss - Heavy paint loss and rust throughout floorbeam and associated framing.

City/Town	B.I.N.	Br. Dept. No.	8 - Structure No.	90 - Inspection Date
Portsmouth / Kittery			**3641 (ME)/251/108 (NH)**	10/11/11 -12/14/11

Photos

Photo 67: Railroad Floorbeam 8 at Midspan, Truss Span 4, North Half – Top flange section loss.

;.

Photo 68: Railroad Floorbeam 8 at Midspan, Truss Span 4, South Half – Top flange Section loss.

City/Town	B.I.N.	Br. Dept. No.	8 - Structure No.	90 - Inspection Date
Portsmouth / Kittery			**3641 (ME)/251/108 (NH)**	10/11/11 – 12/14/11

Photos

Photo 69: Railroad Floorbeam 0 at Midspan, Truss Span 5, South Half – Top Flange section loss.

Photo 70: Roadway Floorbeam 8 at 7 Feet from East End, Truss Span 5, North Face, Looking Southwest – Note drilled hole in bottom flange for abandoned conduit support.

City/Town	B.I.N.	Br. Dept. No.	8 - Structure No.	90 - Inspection Date
Portsmouth / Kittery			**3641 (ME)/251/108 (NH)**	10/11/11 – 12/14/11

Photos

Photo 71: Roadway Floorbeam 0 at Midspan, Truss Span 1 South Face, Looking Northwest – 100% bottom flange section loss.

Photo 72: Roadway Floorbeam 5 at 7 Feet from East End, Truss Span 1, South Face looking Northwest – Drilled hole in bottom flange for abandoned blast plates.

City/Town	B.I.N.	Br. Dept. No.	8 - Structure No.	90 - Inspection Date
Portsmouth / Kittery			**3641 (ME)/251/108 (NH)**	**10/11/11 – 12/14/11**

Photos

Photo 73: Roadway Floorbeam 0, East Cantilever, Truss Span 4, North Face, Looking East – 100% top flange section loss.

Photo 74: Roadway Floorbeam 0, Truss Span 3, South Face Looking Northeast - Numerous sheared rivets with impacted rust and flange plate separation at midspan.

City/Town	B.I.N.	Br. Dept. No.	8 - Structure No.	90 - Inspection Date
Portsmouth / Kittery			**3641 (ME)/251/108 (NH)**	**10/11/11 – 12/14/11**

Photos

Photo 75: Roadway Floorbeam 8, Truss Span 3 – Several sheared rivet heads along bottom flange at midspan with up to 1 3/8" pack rust between cover plate and flange angle.

Photo 76: Roadway Floorbeam 8, Truss Span 3, North Face looking East – Impact damage to bottom flange angle and web between the east roadway stringer and the east truss.

City/Town	B.I.N.	Br. Dept. No.	8 - Structure No.	90 - Inspection Date
Portsmouth / Kittery			**3641 (ME)/251/108 (NH)**	**10/11/11 – 12/14/11**

Photos

Photo 77: North Railroad Floorbeam, North Tower - Typical 1" pack rust between bottom flange angle and web causing distortion to lower web.

Photo 78: North Railroad Floorbeam, North Tower - Close-up view showing maximum 1 1/2" pack rust distortion to lower web.

City/Town	B.I.N.	Br. Dept. No.	8 - Structure No.	90 - Inspection Date
Portsmouth / Kittery			**3641 (ME)/251/108 (NH)**	**10/11/11 – 12/14/11**

Photos

Photo 79: North Railroad Floorbeam, North Tower - Section loss to upper 6" of web and rivet heads on the south web plate.

Photo 80: South Railroad Floorbeam, South Tower - Heavy rust with minor section loss to top plate. Note severe rivet head losses.

City/Town	B.I.N.	Br. Dept. No.	8 - Structure No.	90 - Inspection Date
Portsmouth / Kittery			**3641 (ME)/251/108 (NH)**	**10/11/11 – 12/14/11**

Photos

Photo 81: South Railroad Floorbeam, South Tower - Heavy rust with minor section loss to top plate. Note severe rivet head losses.

Photo 82: North Roadway Floorbeam, North Tower - Heavy rust with section loss to north face of north web plate at west end.

City/Town	B.I.N.	Br. Dept. No.	8 - Structure No.	90 - Inspection Date
Portsmouth / Kittery			**3641 (ME)/251/108 (NH)**	**10/11/11 – 12/14/11**

Photos

Photo 83: Upper Chord U0U1, East Truss Span 4, Looking North - Heavy impacted rust.

Photo 84: Upper Chord U0U1 at U1, West Truss Span 4, East Face, Looking South – Heavy impacted rust with web deformation

City/Town	B.I.N.	Br. Dept. No.	8 - Structure No.	90 - Inspection Date
Portsmouth / Kittery			**3641 (ME)/251/108 (NH)**	**10/11/11 -12/14/11**

Remarks & Photos

Photo 85: Upper Chord U0U1 at U1, West Truss Span 4, Looking South - Heavy impacted rust with web deformation.

Photo 86: Lower Chord, Bay 1 at North Quarter Point, West Truss Span 1, Looking East - Heavy rust with web section loss.

City/Town	B.I.N.	Br. Dept. No.	8 - Structure No.	90 - Inspection Date
Portsmouth / Kittery			**3641 (ME)/251/108 (NH)**	10/11/11 – 12/14/11

Photos

Photo 87: Lower Chord, Bay 1 at Midspan, West Truss Span 2, Looking East - Heavy rust with web section loss.

Photo 88: Lower Chord, Bay 8 at L8, West Truss Span 2, Looking East - Web section loss at gusset plate.

City/Town	B.I.N.	Br. Dept. No.	8 - Structure No.	90 - Inspection Date
Portsmouth / Kittery			**3641 (ME)/251/108 (NH)**	10/11/11 – 12/14/11

Photos

Photo 89: Lower Chord, Bay 4 at Midspan, West Truss Span 4, Looking South - Top flange and web section loss.

Photo 90: Lower Chord, Bay 8 at L8, West Truss Span 4, Looking East - Web section loss and rivet deterioration.

City/Town	B.I.N.	Br. Dept. No.	8 - Structure No.	90 - Inspection Date
Portsmouth / Kittery			**3641 (ME)/251/108 (NH)**	10/11/11 – 12/14/11

Photos

Photo 91: Lower Chord, Bay 4 near L4, West Truss Span 5, East Face, West Web - Heavy rust and web section loss.

Photo 92: Web Diagonal, L4U5 at Mid-height, West Truss Span 1, West Face - Bottom flange and web section loss.

City/Town	B.I.N.	Br. Dept. No.	8 - Structure No.	90 - Inspection Date
Portsmouth / Kittery			**3641 (ME)/251/108 (NH)**	10/11/11 – 12/14/11

Photos

Photo 93: Web Diagonal, L4U5 at Mid-height, West Truss Span 1, West Face, East Web - Heavy section loss.

Photo 94: Web Diagonal, L4U5 at Lower Quarter Point, West Truss Span 2, West Face - Heavy section loss.

City/Town	B.I.N.	Br. Dept. No.	8 - Structure No.	90 - Inspection Date
Portsmouth / Kittery			**3641 (ME)/251/108 (NH)**	10/11/11 – 12/14/11

Photos

Photo 95: Web Diagonal, L0U1, West Truss Span 2, West Face - Heavy rust and section loss.

Photo 96: Web Diagonal, L4U3 near L3, West Truss Span 3, West Face - Heavy rust and section loss.

City/Town	B.I.N.	Br. Dept. No.	8 - Structure No.	90 - Inspection Date
Portsmouth / Kittery			**3641 (ME)/251/108 (NH)**	10/11/11 – 12/14/11

Photos

Photo 97: Web Diagonal, L4U3 at L4, West Truss Span 4, West Face - Heavy rust and section loss.

Photo 98: Web Vertical, L4U4 near L4, West Truss Span 2, West Face, Looking NE - Heavy rust and section loss.

City/Town	B.I.N.	Br. Dept. No.	8 - Structure No.	90 - Inspection Date
Portsmouth / Kittery			**3641 (ME)/251/108 (NH)**	10/11/11 – 12/14/11

Photos

Photo 99: Web Vertical, L5U5 at L5, West Truss Span 2, West Face - Heavy rust and section loss.

Photo 100: Web Vertical, L0U0 near L0, West Truss Span 4, West Face - 7" wide hole in the web.

City/Town	B.I.N.	Br. Dept. No.	8 - Structure No.	90 - Inspection Date
Portsmouth / Kittery			**3641 (ME)/251/108 (NH)**	10/11/11 – 12/14/11

Photos

Photo 101: Web Vertical, L4U4 at L4, East Truss Span 5, East Face - 4" wide hole in the web.

Photo 102: Web Vertical, L3U3 at L3, West Truss Span 4, West Face, Looking North - Heavy rust and flange loss.

City/Town	B.I.N.	Br. Dept. No.	8 - Structure No.	90 - Inspection Date
Portsmouth / Kittery			**3641 (ME)/251/108 (NH)**	**10/11/11 - 12/14/11**

Photos

Photo 103: Truss Lower Lateral Bracing, Bay 4 at Center Gusset Plate, Truss Span 5, Looking NE – Heavy impacted rust.

Photo 104: Truss Lower Lateral Bracing, Bay 1 at East Truss L0, Truss Span 1 - Painted over losses. Also note losses at gusset.

City/Town	B.I.N.	Br. Dept. No.	8 - Structure No.	90 - Inspection Date
Portsmouth/Kittery			**3641 (ME)/251/108 (NH)**	**10/11/11 - 12/14/11**

Photos

Photo 105: Truss Lower Lateral Bracing, Bay 3 near Center Gusset, Truss Span 1 - Hole in outstanding leg.

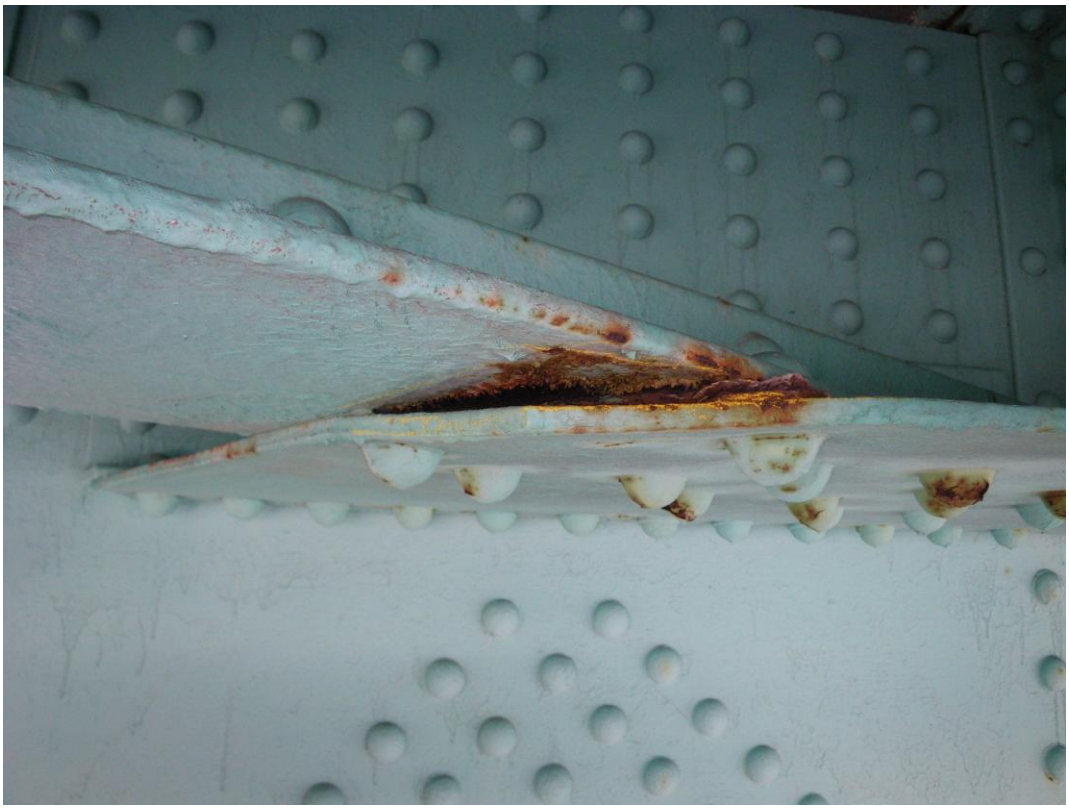

Photo 106: Truss Upper Lateral Bracing U0EU1W at U1W, Truss Span 4, Looking West - Impacted rust between the horizontal legs and connection plate to truss upper chord.

City/Town	B.I.N.	Br. Dept. No.	8 - Structure No.	90 - Inspection Date
Portsmouth/Kittery			**3641 (ME)/251/108 (NH)**	**10/11/11 – 12/14/11**

Photos

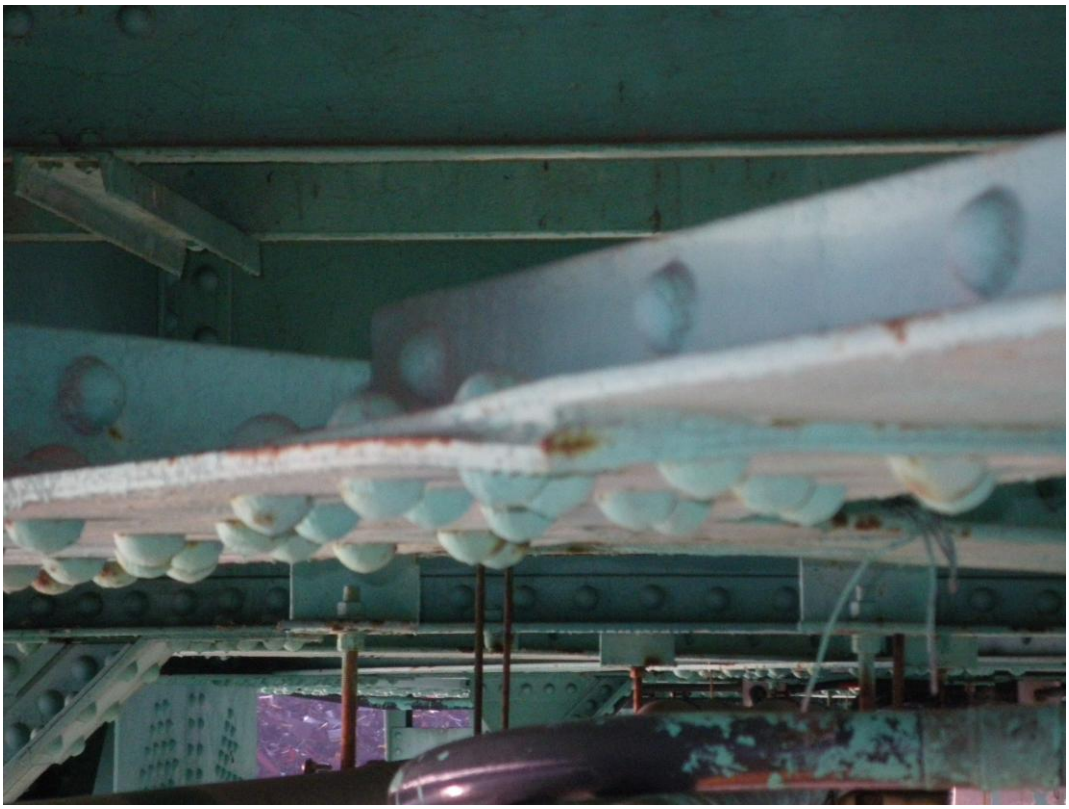

Photo 107: Truss Upper Lateral Bracing U6EU7W at Midspan, Truss Span 2, Looking Southwest - Impacted rust between the horizontal legs and midspan connection plate.

Photo108: Lift Span Hanger Assembly, Truss Span 3 – Hanger at southeast corner of lift span shown.

City/Town	B.I.N.	Br. Dept. No.	8 - Structure No.	90 - Inspection Date
Portsmouth / Kittery			**3641 (ME)/251/108 (NH)**	10/11/11 -12/14/11

Photos

Photo 109: Lower Chord Gusset Plate, Bay 8 at L8, West Truss Span 4, West Plate, West Face - Heavy rust and section loss.

;.

Photo 110: Lower Chord Gusset Plate, Bay 1 at L1, West Truss Span 2, West Plate, East Face - Heavy rust and section loss.

City/Town	B.I.N.	Br. Dept. No.	8 - Structure No.	90 - Inspection Date
Portsmouth / Kittery			**3641 (ME)/251/108 (NH)**	10/11/11 – 12/14/11

Photos

Photo 111: Lower Chord Gusset Plate, Bay 1 at L0, West Truss Span 2, West Plate, West Face - Heavy rust and section loss.

Photo 112: Lower Chord Gusset Plate, Bay 1 at L0, West Truss Span 2, West Plate, West Face - Heavy rust and section loss to plate and rivets.

City/Town	B.I.N.	Br. Dept. No.	8 - Structure No.	90 - Inspection Date
Portsmouth / Kittery			**3641 (ME)/251/108 (NH)**	10/11/11 – 12/14/11

Photos

Photo 113: Lower Chord Gusset Plate, Bay 8 at L8, West Truss Span 2, West Plate, West Face, Looking North - Heavy impacted rust and rivet head losses.

Photo 114: Lower Chord Gusset Plate, Bay 8 at L8, West Truss Span 2, West Plate, West Face - Heavy rust and section loss to plate and rivets.

City/Town	B.I.N.	Br. Dept. No.	8 - Structure No.	90 - Inspection Date
Portsmouth / Kittery			**3641 (ME)/251/108 (NH)**	**10/11/11 – 12/14/11**

Photos

Photo 115: Lower Chord Gusset Plate, Bay 8 at L8, East Truss Span 3, East Plate, East Face - Heavy rust and section loss.

Photo 116: Lower Chord Gusset Plate, Bay 8 at L8, East Truss Span 4, West Plate, West Face - Heavy impacted rust.

City/Town	B.I.N.	Br. Dept. No.	8 - Structure No.	90 - Inspection Date
Portsmouth / Kittery			**3641 (ME)/251/108 (NH)**	**10/11/11 – 12/14/11**

Photos

Photo 117: Lower Chord Gusset Plate, Bay 8 at L8, East Truss Span 4, East Plate, West Face - Heavy rust and section loss.

Photo 118: Lower Chord Gusset Plate, Bay 1 at L0, West Truss Span 5, West Plate, West Face - Heavy rust and section loss.

City/Town	B.I.N.	Br. Dept. No.	8 - Structure No.	90 - Inspection Date
Portsmouth / Kittery			**3641 (ME)/251/108 (NH)**	**10/11/11 -12/14/11**

Remarks & Photos

Photo 119: Upper Chord Gusset Plate, Bay 8 at U8, West Truss Span 1, West Plate, Looking South - Heavy impacted rust and section loss.

Photo 120: Upper Chord Gusset Plate, U5, East Truss Span 2, East Plate, East Face - Heavy rust, impacted rust and section loss.

City/Town	B.I.N.	Br. Dept. No.	8 - Structure No.	90 - Inspection Date
Portsmouth / Kittery			**3641 (ME)/251/108 (NH)**	10/11/11 – 12/14/11

Photos

Photo 121: Upper Chord Gusset Plate, Bay 1 at U0, West Truss Span 2, West Plate, West Face - Heavy impacted rust and section loss.

Photo 122: Upper Chord Gusset Plate, Bay 8 at U8, East Truss Span 4, East Plate, East Face - Heavy impacted rust and section loss.

City/Town	B.I.N.	Br. Dept. No.	8 - Structure No.	90 - Inspection Date
Portsmouth / Kittery			**3641 (ME)/251/108 (NH)**	**10/11/11 - 12/14/11**

Photos

Photo 123: Lacing Bars at Web Diagonal, L4U5 at Lower Quarter Point, West Truss Span 2, West Face - Heavy deterioration and section loss.

Photo 124: Truss Bearing, West Truss, Span 2 at Pier 16, Looking East - Heavy rust throughout.

City/Town	B.I.N.	Br. Dept. No.	8 - Structure No.	90 - Inspection Date
Portsmouth/Kittery			**3641 (ME)/251/108 (NH)**	**10/11/11 - 12/14/11**

Photos

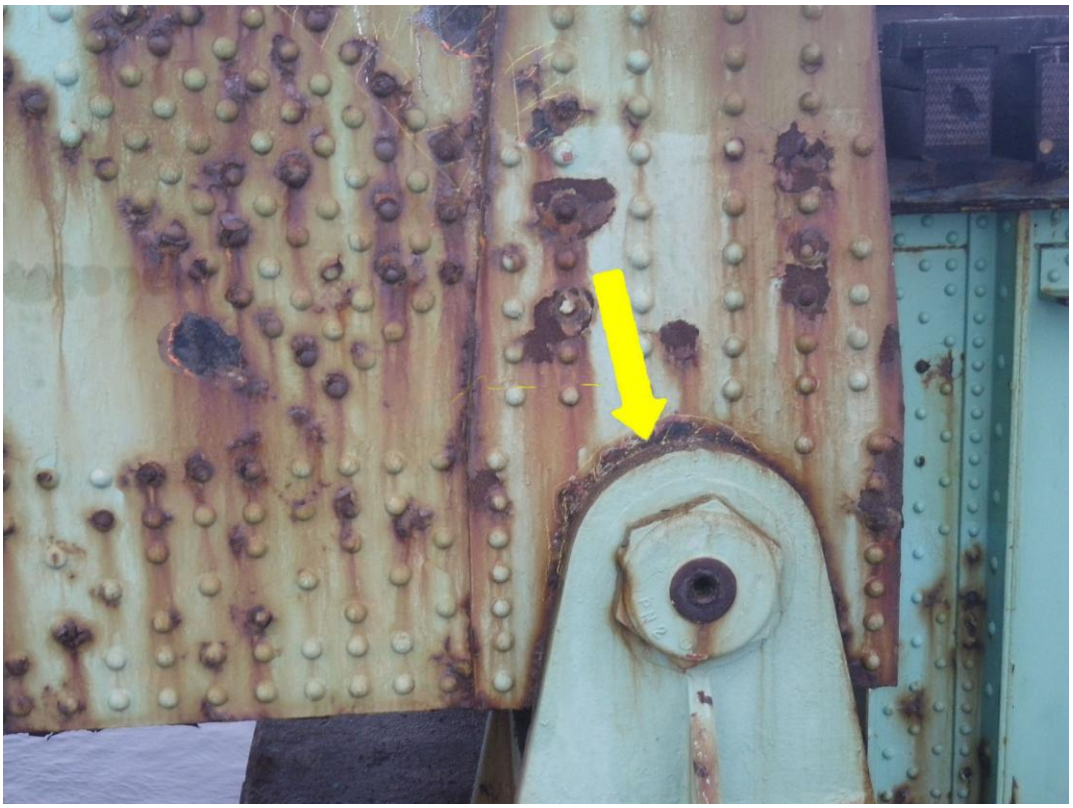

Photo 125: Truss Bearing, West Truss, Span 1 at Pier 15, Looking East - Heavy rust and section loss around pin nut.

Photo 126; Truss Bearing, East Truss, Span 5 at Pier 20, Looking East - Heavy stiffener losses.

City/Town	B.I.N.	Br. Dept. No.	8 - Structure No.	90 - Inspection Date
Portsmouth/Kittery			**3641 (ME)/251/108 (NH)**	**10/11/11 – 12/14/11**

Photos

Photo 131: Truss Bearing, West Truss, Span 1 at Pier 15, Looking Northeast - Heavy rust and losses to anchor bolt nut.

Photo 128: Lift Span centering Casting, Span 3 at Pier 17, Looking West - 100% section loss to NE anchor bolt nut.

City/Town	B.I.N.	Br. Dept. No.	8 - Structure No.	90 - Inspection Date
Portsmouth / Kittery			**3641 (ME)/251/108 (NH)**	10/11/11 -12/14/11

Photos

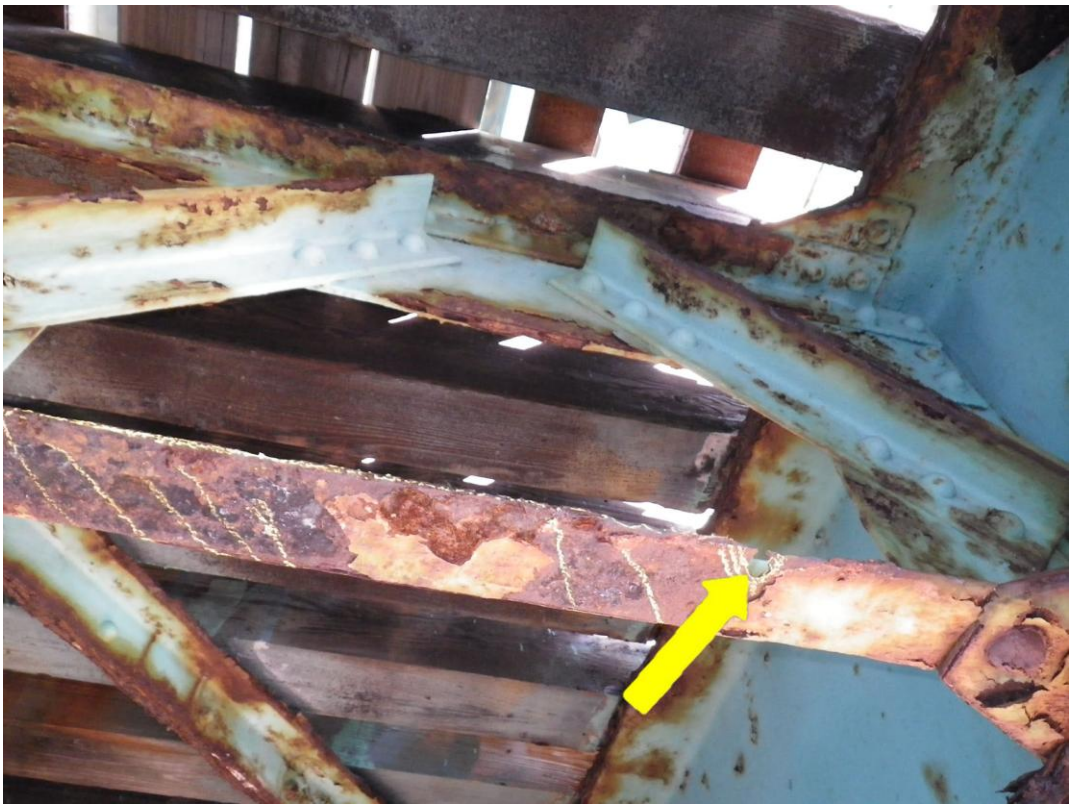

Photo 129: Railroad Stringer Cross Frame, Bay 8, Truss Span 4 - Heavy losses throughout with hole.

;.

Photo 130: Rivets, Lower Chord L2L3, East Truss Span 2, East Face, Looking North - Rivet heads with heavy rust and deterioration.

City/Town	B.I.N.	Br. Dept. No.	8 - Structure No.	90 - Inspection Date
Portsmouth / Kittery			**3641 (ME)/251/108 (NH)**	10/11/11 – 12/14/11

Photos

Photo 131: Roadway Floorbeam 3 at West Stringer Connection, Truss Span 3, North Face – 100% section loss to rivet head.

Photo 132: Lower Chord, Bay 5 at Midspan, West Truss Span 1, Looking East - Heavy rust and paint loss.

City/To	B.I.N.	Br. Dept. No.	8 - Structure No.	90 - Inspection Date
Portsmouth / Kittery			**3641 (ME)/251/108 (NH)**	**10/11/11 - 12/14/11**

Photos

Photo 133: Pier 15 Cap, West Face - Spall with exposed reinforcement.

Photo 134: Pier 15 Backwall, South Face, Looking West - Spall with exposed reinforcement.

City/Town	B.I.N.	Br. Dept. No.	8 - Structure No.	90 - Inspection Date
Portsmouth/Kittery			**3641 (ME)/251/108 (NH)**	**10/11/11 - 12/14/11**

Photos

Photo 135: Pier 15 Cap, East Face - Spall with exposed reinforcement.

Photo 136: Top of Pier 18 Cap, Center, Looking Southwest - Delaminated area with spalling and punky concrete. .

City/Town	B.I.N.	Br. Dept. No.	8 - Structure No.	90 - Inspection Date
Portsmouth/Kittery			**3641 (ME)/251/108 (NH)**	**10/11/11 – 12/14/11**

Photos

Photo 137: Top of Pier 19 Cap, West End, Looking North - Spall with punky concrete.

Photo138: Top of Pier 19 Cap, adjacent to West Truss Bearings, Looking West - Spall with punky concrete.

City/Town	B.I.N.	Br. Dept. No.	8 - Structure No.	90 - Inspection Date
Portsmouth / Kittery			**3641 (ME)/251/108 (NH)**	10/11/11 -12/14/11

Photos

Photo 139: Pierwall 18, South Face - Vertical crack in granite facade.

Photo 140: Pier 19, West Face - Efflorescence between cap and granite façade of pierwall.

City/Town	B.I.N.	Br. Dept. No.	8 - Structure No.	90 - Inspection Date
Portsmouth / Kittery			**3641 (ME)/251/108 (NH)**	10/11/11 – 12/14/11

Photos

Photo 141: North Tower – General elevation of north face.

Photo 142: South Tower, East Column – Typical condition of anchor bolt anchorage (S.E. corner of east column shown above).

City/Town	B.I.N.	Br. Dept. No.	8 - Structure No.	90 - Inspection Date
Portsmouth / Kittery			**3641 (ME)/251/108 (NH)**	**10/11/11 – 12/14/11**

Photos

Photo 143: South Tower, East Column – Typically localized section loss at base of anchor bolts (1/16”-1/8” deep section loss).

Photo 144: South Tower, East Column, Close-up new showing localized areas of section loss to grillage plates.

City/Town	B.I.N.	Br. Dept. No.	8 - Structure No.	90 - Inspection Date
Portsmouth / Kittery			**3641 (ME)/251/108 (NH)**	**10/11/11 – 12/14/11**

Photos

Photo 145: North Tower, East Column, South and East Faces – Areas of localized heavy rust with up to 5/16" deep pitting and a 4 ½ " diameter west hole on south face exposing the concrete fill.

Photo 146: North Tower, West Column, North Face – Areas of heavy rust and section loss at railroad track level with a 1" diameter rust hole exposing the concrete fill.

City/Town	B.I.N.	Br. Dept. No.	8 - Structure No.	90 - Inspection Date
Portsmouth / Kittery			**3641 (ME)/251/108 (NH)**	**10/11/11 -12/14/11**

Remarks & Photos

Photo 147: South Tower, West Column, South and East Faces – D-meter thickness readings in regions of heavy rust, between pier cap level and roadway deck level.

Photo 148: South Tower, West Column, East Face at RR Track Level – Numerous locations of heavy rust with rust hole perforations in the ¼" sheathing plate and access door.

City/Town	B.I.N.	Br. Dept. No.	8 - Structure No.	90 - Inspection Date
Portsmouth / Kittery			**3641 (ME)/251/108 (NH)**	10/11/11 – 12/14/11

Photos

Photo 149: North Tower, East Column, West Face at Roadway Level – Numerous areas of heavy rust with rust hole perforations in sheathing plate and access door.

Photo 150: North Tower, West Column, East Face at Roadway Level – 5'-8" long section of cracked seam weld in sheathing plate with pack rust.

City/Town	B.I.N.	Br. Dept. No.	8 - Structure No.	90 - Inspection Date
Portsmouth / Kittery			**3641 (ME)/251/108 (NH)**	**10/11/11 - 12/14/11**

Photos

Photo 151: North Tower, East Column, South Face at T3 Level – Horizontal crack along seam weld.

Photo 152: South Tower, West Column, Midway Between T1 and T2 Level – Local cracks and rust hole within a 16” wide x 5” high region.

City/Town	B.I.N.	Br. Dept. No.	8 - Structure No.	90 - Inspection Date
Portsmouth/Kittery			**3641 (ME)/251/108 (NH)**	**10/11/11 - 12/14/11**

Photos

Photo 153: South Tower, East Leg, East and South Faces – Horizontal inch along seam weld.

Photo 154: South Tower, East Leg, South Face – 7 ½" wide x 5" high rust hole at top of concrete encasement surface.

City/Town	B.I.N.	Br. Dept. No.	8 - Structure No.	90 - Inspection Date
Portsmouth/Kittery			**3641 (ME)/251/108 (NH)**	**10/11/11 – 12/14/11**

Photos

Photo 155: North Tower, West Leg, North Face between T0 and T1 Level – 18" Wide x up to 12 " High rust hole at top of surface of concrete encasement.

Photo156: South Tower, East Column, East Face – Overlapping seam with between T0 and T1 level with 5/3" pack rust.

City/Town	B.I.N.	Br. Dept. No.	8 - Structure No.	90 - Inspection Date
Portsmouth / Kittery			**3641 (ME)/251/108 (NH)**	10/11/11 -12/14/11

Photos

Photo 157. South Tower, South Face – Typical ¼" – ½" pack rust distortion to sheathing plate at counterweight level opening.

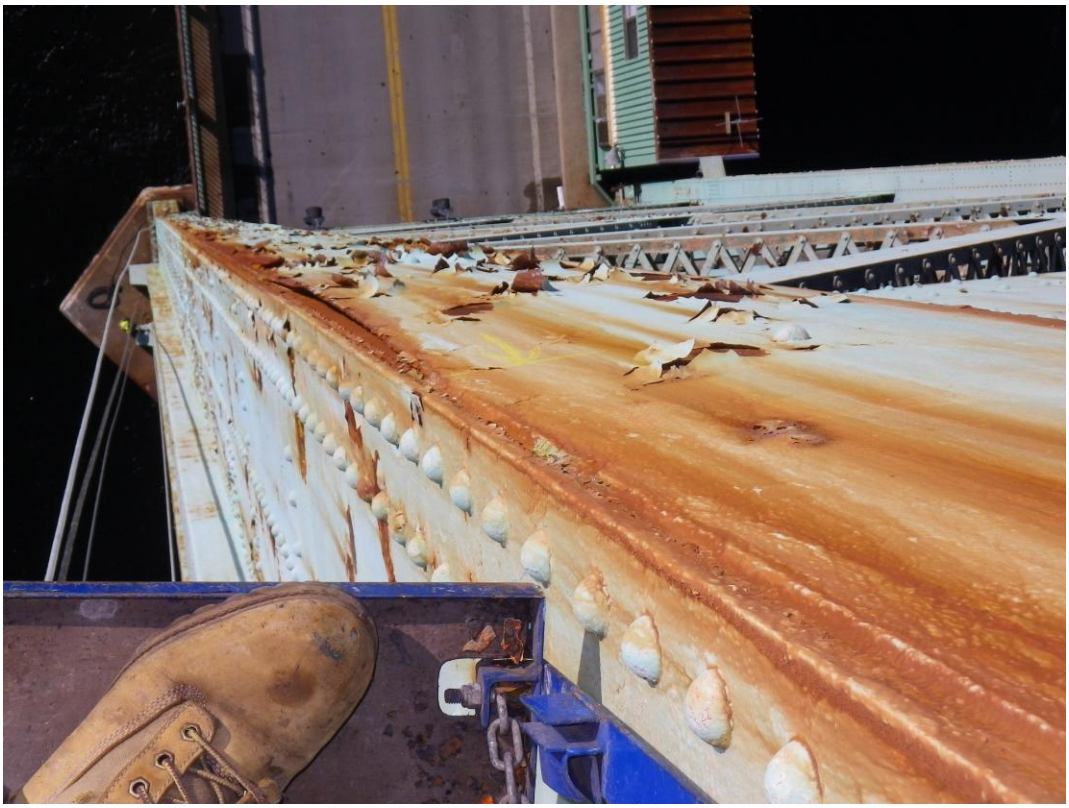

Photo 158: South Tower, East Column, South Face at T1 Level – 8'- 6" long section of south plate bowed outward up to 1 1/8" due to cracked weld at east face.

City/Town	B.I.N.	Br. Dept. No.	8 - Structure No.	90 - Inspection Date
Portsmouth / Kittery			**3641 (ME)/251/108 (NH)**	10/11/11 – 12/14/11

Photos

Photo 159:.South Tower, East Column, South Face at T1 Level – Close-up view showing 1 1/8” plate separation.

Photo 160: South Tower, East Column, North Face between T0 and T1 Level – 3’-1” long sections of cracked weld along east face with ½” separation.

City/Town	B.I.N.	Br. Dept. No.	8 - Structure No.	90 - Inspection Date
Portsmouth / Kittery			**3641 (ME)/251/108 (NH)**	10/11/11 – 12/14/11

Photos

Photo 161: North Tower, East Column, North Face at T2 Level – 11' – 4" long section of cracked weld along east face with 1" maximum separation.

Photo 162: North Tower, West Column, South Face between T1 and T2 Level – 11'-4" long section of cracked weld with" ½" separation.

City/Town	B.I.N.	Br. Dept. No.	8 - Structure No.	90 - Inspection Date
Portsmouth / Kittery			**3641 (ME)/251/108 (NH)**	**10/11/11 – 12/14/11**

Photos

Photo 163: North tower, West Column, North Face at T1 Level – 12'-8" long section of cracked weld along west face with 2¼" maximum separation

Photo 164: North Tower, West Column, North Face at T1 Level – Close-up view showing 2 ¼" plate separations. Note lack of pack rust behind bowed plate.

City/Town	B.I.N.	Br. Dept. No.	8 - Structure No.	90 - Inspection Date
Portsmouth / Kittery			**3641 (ME)/251/108 (NH)**	**10/11/11 – 12/14/11**

Photos

Photo 165: South Tower Mechanical Room Looking West, - Structure steel elements generally exhibit surface rust with no appreciable section loss

Photo 166: South tower Mechanical Room – Local rusting to checkered floor plate and window support angle at 2nd window from west, north face.

City/Town	B.I.N.	Br. Dept. No.	8 - Structure No.	90 - Inspection Date
Portsmouth / Kittery			**3641 (ME)/251/108 (NH)**	**10/11/11 -12/14/11**

Photos

Photo 167: North Tower Looking West – Typical loss of paint with surface rust and no appreciable section loss on exterior surface.

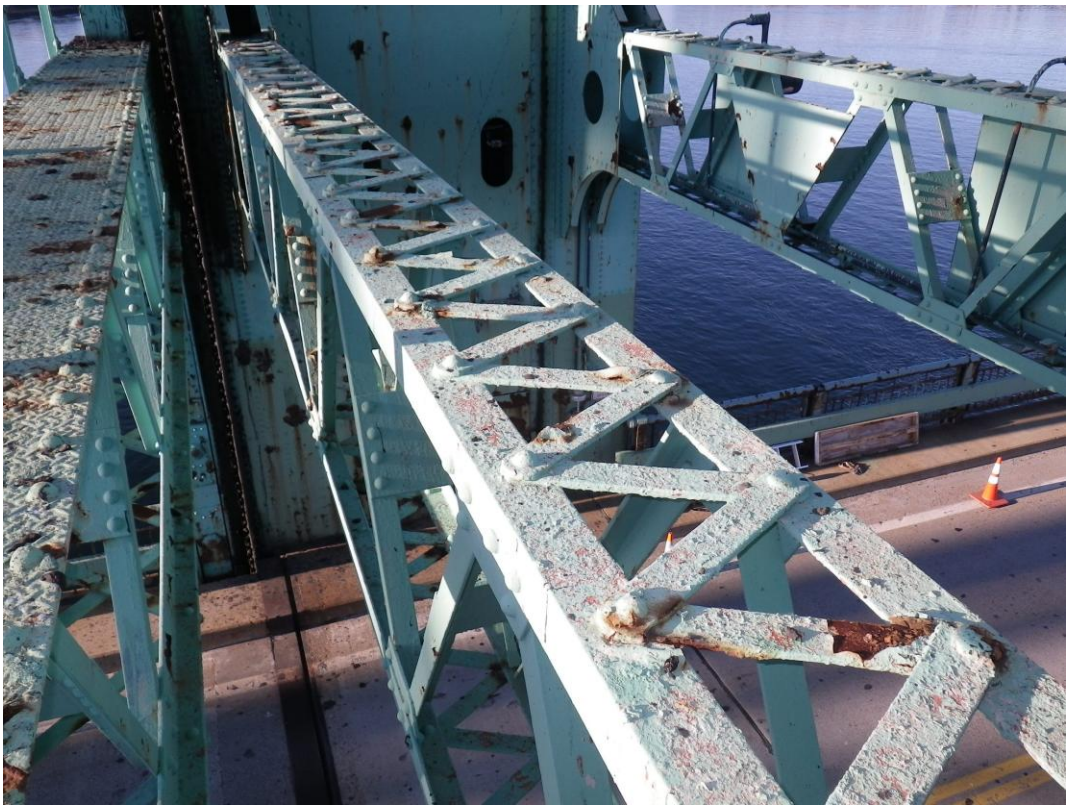

Photo 168: North Tower, Lateral Bracing at T4 Level – Lacing bars exhibit areas of rust delamination with scattered rust holes.

City/Town	B.I.N.	Br. Dept. No.	8 - Structure No.	90 - Inspection Date
Portsmouth / Kittery			**3641 (ME)/251/108 (NH)**	10/11/11 – 12/14/11

Photos

Photo 169: South Tower, North Diagonal Bracing between T1 and T2 Level - Replacement of original built up member with rolled beam sections.

Photo 170: South Tower, North Diagonal Bracing Looking East Just Below T2 Level – Damaged upper section of diagonal repaired with steel plate.

INSPECTION REPORT
for
Sarah Mildred Long Bridge
over Piscataqua River

PIN 16710.00

December 30, 2011

Prepared for:

Maine Department of Transportation

by:

HNTB

Volume 2 of 2

TABLE OF CONTENTS

VOLUME 1 OF 2	PAGE
Structural Inspection	
Inspection Field Report Summary	1-2
Inspection Findings	3-18
Location Map	19
Truss Span Elevation & Numbering System	20
Truss Span Cross Section	21
Truss Span Floor System & Framing Plan	22
Lift Span Tower Elevation	23
Condition Assessment Sketches	24-46
Photos	47-131

VOLUME 2 OF 2	PAGE
Ancillary Inspection	
Mechanical Inspection	1-21
Electrical Inspection	22-37
Building Structures Inspection	38-57
Railroad Inspection	58-69
Ultrasonic Testing of the Lift Span Hanger Pins	Appendix A
Underwater Inspection	Appendix B

MECHANICAL INSPECTION

Background Information

The Sarah Mildred Long Bridge is a Tower Drive vertical lift bridge spanning the Piscataqua River. The bridge consists of two levels. The lower level carries rail traffic, while the upper level carries 2 lanes of roadway for US Route 1 Bypass highway traffic. A retractable span is located within the lower level on the Kittery side. This span allows passage of small craft without raising the main lift span or interrupting vehicular traffic.

The machinery for span operation is located in a house at the top of each tower. The primary method of access to the machinery is via the counterweight. The bridge is operated by one of two 100 HP motors coupled to the primary reducer in each tower.

One Earle span lock assembly is located at each end of the movable span on the tower piers below the lower level.

The weight of the movable span is counterbalanced by two concrete filled steel shell counterweights, one in each tower. The counterweights are connected to the span via counterweight ropes that pass over sheaves located in the corners of both towers. There are no auxiliary counterweights present on this bridge.

A centering device is located at the center of each lift span tower pier.

The lift span is operated from the control house which is located on the southwest approach span. The retractable span is operated from a local control panel on the southwest approach of the retractable span.

The bridge was inspected to evaluate the mechanical components for an upcoming rehabilitation.

A schematic of the operating machinery is included at the end of this report to show major components of the mechanical system.

Inspection of the Lift Span

Primary Reducers

Observations

Both the north and south primary reducers were reportedly replaced in 1975. They are triple reduction speed reducers with helical gearing. The reducers were manufactured by D.O. James with a reduction ratio of 45.27:1. The nameplate rating is 151 HP at 870 RPM with a service factor of 1.0.

The reducer in the south tower was overall in satisfactory condition. The visible gears displayed minor scuffing and scoring. Minor pitting was observed in the dedendum of the gears. There was some foam present in the oil. Oil was leaking at all of the bearing covers, the breather, and the drain fittings. The north reducer was in similar condition with oil leaking from the split in the housing as well (See Photos M-1, M-2, and M-3). A slight knocking noise in the north reducer was noted during span operation.

Recommendations
The reducers are generally in satisfactory condition. Rehabilitation including replacement of all seals is recommended. This will extend the life of the reducers; however, replacement of both reducers will likely be necessary before the 50 year design life for this rehabilitation is reached since they are already over 35 years old.

Brakes

Observations
A Stearns motor brake is mounted to the rear of each main drive motor. The motor brakes appear to be fairly new and are in satisfactory condition. A thruster-type machinery brake is located on each cross shaft adjacent to the rack pinion. The machinery brakes are 19" Mondel brakes with a maximum torque rating of 2000 ft-lbs.

The machinery brakes were in satisfactory condition. The paint on the brakes was cracked between the shaft and the brakewheel at each location indicating possible relative movement. All links and pins appeared in satisfactory condition. The thrusters and brakes operated smoothly with no abnormal noise or vibration.

The northeast and northwest machinery brakewheels were polished with very minor scoring. Rudimentary sheet metal covers were located above the brakewheels (See Photo M-4). In addition, both the north and south shoes on the northwest machinery brake were axially misaligned.

The southeast machinery brake was in satisfactory condition with surface rust noted on the brakewheel.

The southwest machinery brake was axially misaligned by approximately ¼" (See Photo M-5). The brake pads did not release at the top of the brakewheel and were in contact with the brakewheel during operation. The brakewheel displayed moderate scoring. While the north shoe was tight all around, the south shoe displayed an excessive gap of approximate .048" at the bottom when the brake was set.

Recommendations
The brakes are recommended to be realigned and adjusted. A permanent full cover should be provided at all locations.

Shafts

Observations
There are two main cross shafts in each machinery room. These are floating shafts which transmit power from the primary reducer to the pinion shaft. The machinery brakes are mounted on these cross shafts. The shafts appear to be original.

The cross shafts were typically in satisfactory condition.

Recommendations
It is recommended that the cross shafts be cleaned and repainted.

See Rack and Rack Pinion section for discussion of the pinion shafts.

Couplings

Observations
One grid-type coupling attaches each motor to the primary reducer. They are type 1080T20 as manufactured by Falk. Single engagement gear couplings connect each cross shaft to the primary reducer output and the pinion shaft.

The couplings were in satisfactory condition. The grid-type couplings appeared to be fairly new and the covers were not painted. The paint was in satisfactory condition on the gear couplings. Minor dirt and grease accumulation was present on the hubs. Coupling fasteners and keys were present and tight.

Recommendations
The covers on the grid-type couplings should be painted in order to prevent corrosion. A guard should be provided over each grid-type coupling. The gear couplings should have all lubricant replaced and new seals and gaskets should be installed.

Bearings

Observations
There are two pinion shaft bearings located at each corner of the machinery room. The bearings are plain bronze-bushed bearings. These bearings support the rack pinion shaft.

The bearings were in satisfactory condition. Minor to moderate dirt and lubricant accumulation was typically present on the housings. Excessive clearance was measured at southeast bearing B4 and exterior bearings B3 at all locations. In general, the lubrication was in satisfactory condition. See Table M-1 for measured bearing clearances.

Recommendations
The bearing housings should be cleaned and painted. All old lubricant should be removed and new lubricant should be applied. Bushings and liners should be replaced at bearings with excessive clearances (5 out of 8 bearings).

Supports

Observations
The machinery supports were typically in satisfactory condition. No deficiencies were noted with the fasteners. Moderate debris accumulation was present on the base of the supports.

Recommendations
Supports should be cleaned and painted.

Rack and Rack Pinion

Observations

The rack pinion is integral to the rack pinion shaft. The pinion engages a sheave mounted rack gear. The width of the rack pinion is 9¼" and the rack is 5" wide. The racks and rack pinions appear original to the bridge.

The rack pinion shafts were in satisfactory condition with heavy lubricant accumulation. The shafts were not painted.

There was heavy scoring and pitting on both faces of the northeast pinion. Moderate plastic flow was noted on both faces on the tips of the teeth.

The northwest pinion had plastic flow on the tips of the teeth on both the opening and closing faces (See Photo M-6). There was minor scoring present on the closing face and heavy scoring on the opening face.

Both the southeast and the southwest pinion had moderate scoring on both faces. There was moderate plastic flow at the tips of the teeth, heavier on the opening face.

The racks were in fair condition. Minor to moderate scoring was present on both faces at all rack locations. There was a depression at the pitch circle on both faces; more pronounced on the opening face (See Photo M-7). Plastic flow was noted on the tips of the teeth on the northeast, northwest, and southeast racks. Up to 1/8" of wear was measured on the pinion teeth. See Table M-2 for gear tooth measurements.

Recommendations
Due to the condition and wear observed and measured, the racks and rack pinions should be replaced at all locations.

Sheaves and Trunnion Bearings

Observations
There are four counterweight sheaves supporting the movable span, one in each corner. The counterweight sheaves are steel castings with 10 ft. rope pitch diameter. The sheaves and the trunnion bearings are the original assemblies. The trunnion bearings are plain bronze bushed bearings. The trunnion bearings carry the entire weight of the movable span, counterweight, and counterweight ropes when raising the span.

The sheaves appeared to be in fair condition. The sheave grooves were typically worn as measured with a groove gauge. The northwest and southwest counterweight ropes made snapping noises on the sheave during both opening and closing of the span. This is typically indicative of heavily worn grooves. Chatter marks were visible in several of the sheave rope grooves indicating that ropes are jumping in the sheave grooves. Minor surface rust and corrugation were present on the grooves (See Photo M-8).

The trunnion bearing housings were in satisfactory condition with lubricant and debris accumulation present. Large clearance between the trunnion journal and trunnion bearing cap was measured at all locations. The paint was in fair condition with chipping in multiple places on the housings and the supports. The lubrication was in satisfactory condition for all bearings and double nuts were present on the cap bolts.

Calculations have determined that the counterweight sheave trunnion shafts have exceeded their fatigue life. Re-machining of the rope grooves in the sheave would be necessary to restore proper operation of the ropes. Based on available information, there is not sufficient rim thickness on the sheaves to accomplish this.

Recommendations
Based on the extent of the work required on the sheave assemblies, the sheaves, trunnion bearings, and trunnion shafts should be replaced at all locations.

Counterweight Ropes and Sockets

Observations
The counterweight wire ropes are 6 x 19 and have a diameter of 1¾". There are 16 ropes per sheave. The rope sockets are block sockets which bear against steel castings at the lift span and the counterweight.

The ropes appeared to be in satisfactory condition. The lubrication appeared satisfactory with old lubricant accumulation and debris noted near the counterweight connections and span connections (See Photo M-9). Rope tensions were not measured during this inspection. The sockets appeared to be in satisfactory condition; however, heavy lubricant accumulation at the counterweight side sockets precluded thorough inspection. Flat spots of approximately 3/8" to 1/2" were noted on the ropes though they could not be measured due to lack of access (See Photo M-10).

There was very heavy grease accumulation on top of the counterweight in the area of the rope connections (See Photo M-11). In addition, there were no railings which present a hazard to maintenance and inspection crews.

Recommendations
The ropes should be cleaned of old lubricant, re-lubricated, and the tensions should be adjusted. The tops of the counterweight should be cleaned of old lubricant and railings should be provided.

Tower Hoist

Observations
A material hoist was located in the northeast and southeast tower legs. Reportedly, they have not been functional for some time. No information was available on these elevators.

Recommendations
Replacement of these hoists would be necessary to return this functionality and facilitate transfer of materials and equipment to the machinery rooms. Based on the available space in the tower leg, the installation of a passenger elevator does not appear feasible. In addition, a passenger elevator would require a significant amount of safety measures and interlocking.

Span Lock Machinery

Observations
A lockbar driven by a linear actuator is located at each end of the lift span at the tower pier. The lockbar is driven by a 1.5 HP electric motor through enclosed reducers. The guides are located on the pier and the receiver is on the movable span.

The span lock assemblies were in fair condition. Moderate to heavy corrosion was present on all components of the assemblies including the guides (See Photo M-12). The paint was in fair to poor condition. There was no rod boot present on the north lockbar. The rod boot over the south lock bar was not attached at the front end (See Photo M-12). The drive screws appeared satisfactory with the lubrication being in good condition. No manual release for the brake was present on the south motor.

Recommendations
The span lock machinery should be replaced, including the actuators, lockbars, guides, and receivers. A cover should be provided over the span lock equipment to shield it from debris.

Span and Counterweight Guides

Observations
There are upper and lower span guides in each corner of the lift span. The southeast and southwest lower guides are fixed, while the remaining guides are expansion-type. There are upper and lower guides on the east and west sides of each counterweight. The counterweight guides consist of a casting with a u-shaped slot which engages a guide rail on the inside of the tower leg.

The span guides are in satisfactory condition. Dirt and old lubricant accumulation was present on the guides and rails at all locations (See Photo M-13). There is a kink in the southwest span guide rail near the top of the tower (See Photo M-14). This appears to be above the travel of the lower (fixed) guide and does not interfere with operation of the lift span. The upper counterweight guides also appeared in satisfactory condition. Dirt and old lubricant build-up was noted on all upper guides and rails. The lower guides were not readily accessible for inspection; however, no operational issues were observed.

Recommendations
The span guides and rails should be cleaned and lubricated. The portion of guide that is kinked should be ground smooth to ensure it does not affect the operation of the lift span. The counterweight guides and rails should be cleaned and painted.

Centering Devices

Observations
There is one centering device on each end of the lift span. The centering device consists of a receiver mounted to the movable span and a guide lug mounted to the tower pier. Both components appear to be original.

The centering devices appeared in fair condition. The paint has failed and corrosion is present on both the receiver and the guide lug (See Photo M-15). Debris was collecting on the guide lug (See Photo M-16).

Recommendations
The receiver and the guide lug should be cleaned and painted. The anchor bolts should be replaced on the guide lug. The connection between the receiver and the lift span has deteriorated and should be repaired. The connection plates and rivets should be replaced.

Inspection of the Retractable Span

The retractable span repositions a portion of the rail deck to allow small marine craft traffic to pass. The retractable span is normally in the open position and infrequently closes to allow rail traffic. The span is raised on screw jacks and then translates on rails to clear the channel.

The screw jacks are type HMT as manufactured by Limitorque. There are 8 total screw jacks, one pair at each end of both lifting tables. Each pair is driven by a common electric motor through a gear reducer. The screws reside within a steel frame with a movable cover on one side. The cover does not completely seal the area which leaves the screw exposed to debris and salt water causing corrosion (See Photo M-17). The maintenance crew reportedly covers the screws during the winter to protect them from road salt. An oil system was added to lubricate the screws. The oil system was not functional at the time of inspection reportedly due to a failed pump. The screw jacks were manually lubricated prior to and during operation. The bottom of the pump cabinet had a considerable amount of water in it.

The span is guided by four vertical rails, two at each end. The rails are in fair condition with corrosion noted toward the lower end of the rails. The guide shoe was in poor condition with heavy corrosion throughout (See Photo M-18).

There are two trolley beams that are mounted below the upper roadway that guide the span longitudinally as it translates. Rollers attached to vertical trolley arms ride within these beams. Squealing noises were observed during operation from the rollers on the north trolley arms.

The translating machinery consists of a gearmotor and two chain and sprocket reductions. The gearmotor had a 15 HP motor and a ratio of 130:1. The gearmotor was in fair condition with an oil leakage at the lower portion of the gearbox. The chains and sprockets were fully enclosed and were not accessible for inspection. There was minor oil leakage noted at the bottoms of the covers. The shaft bearings were held in place with jacking screws. This is to allow adjustment of tension in the drive chains. The fasteners on the bearings had minor corrosion. There was moderate lubricant accumulation throughout.

The retractable span machinery was in fair condition. The screw jacks should be replaced at all locations. The span guide shoes should be replaced and rails should be rehabilitated. For future reliable operation, the trolley wheels, gear motor, brake, chains, and sprockets should be replaced. The axles and wheels should also be replaced.

Control House Mechanical Systems

Observations

The control house does not have running water or a sewer connection. A 5 gallon bottled water cooler/heater is located on the upper level of the house. A portable restroom is located outside of the house.

Recommendations

A water line should be installed along the Portsmouth approach to the control house. A sewer line from the control house lavatory to a wastewater holding tank located outside the control house should also be provided.

Observations

Heat for the control house is provided by electric radiant heaters and a gas furnace. The upper level consists of three baseboard units in the seating area and one wall unit in the bathroom. They are controlled by a single thermostat in the upper level hallway. The lower level contains two electric wall units and a direct vent gas furnace. All three are independently controlled. The gas for the furnace was provided by a propane tank located outside of the control house. There is no air conditioning unit currently installed.

Recommendations

The electric heaters were in fair condition. They have reached the end of their expected service life and should be replaced (See Photo M-19). The gas furnace is newer and in satisfactory condition (See Photo M-20). Other than routine maintenance, no further actions are recommended for this unit. An exhaust fan should be provided in the lavatory.

Observations

The electric shed had one electric wall mounted heater and an overhead convection unit. A through-the-wall air conditioner was installed.

Recommendations

The convection unit heater and the air conditioner were in satisfactory condition. No action is recommended at the present time for these units. The wall mounted electric heater was in fair condition with rust present on the unit. It should be replaced to ensure reliable operation.

Mechanical Photographs

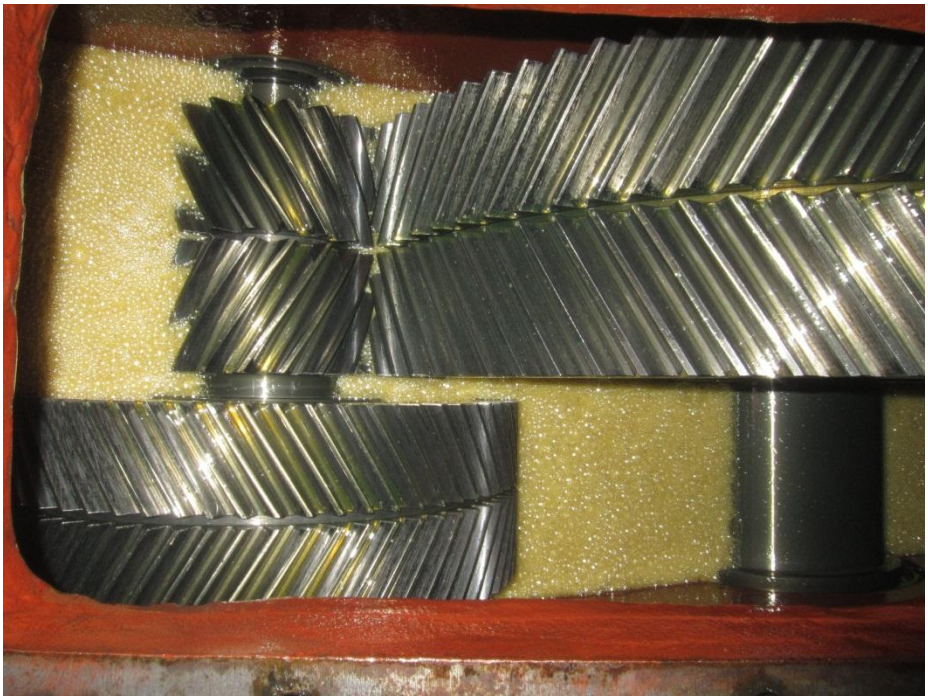

Photo No.: M-1
Location: North Primary Reducer
Description: Typical overall gear condition. Note foam in oil.

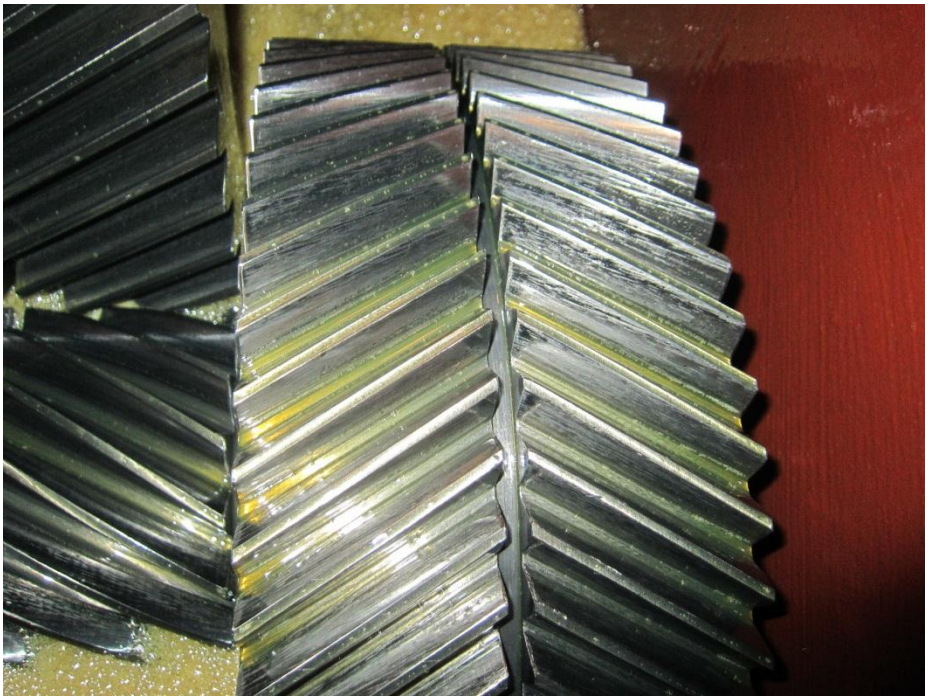

Photo No.: M-2
Location: North Primary Reducer Gears
Description: Note scuffing and scoring on gears.

Photo No.: M-3
Location: North Primary Reducer
Description: Oil leakage from housing and seals.

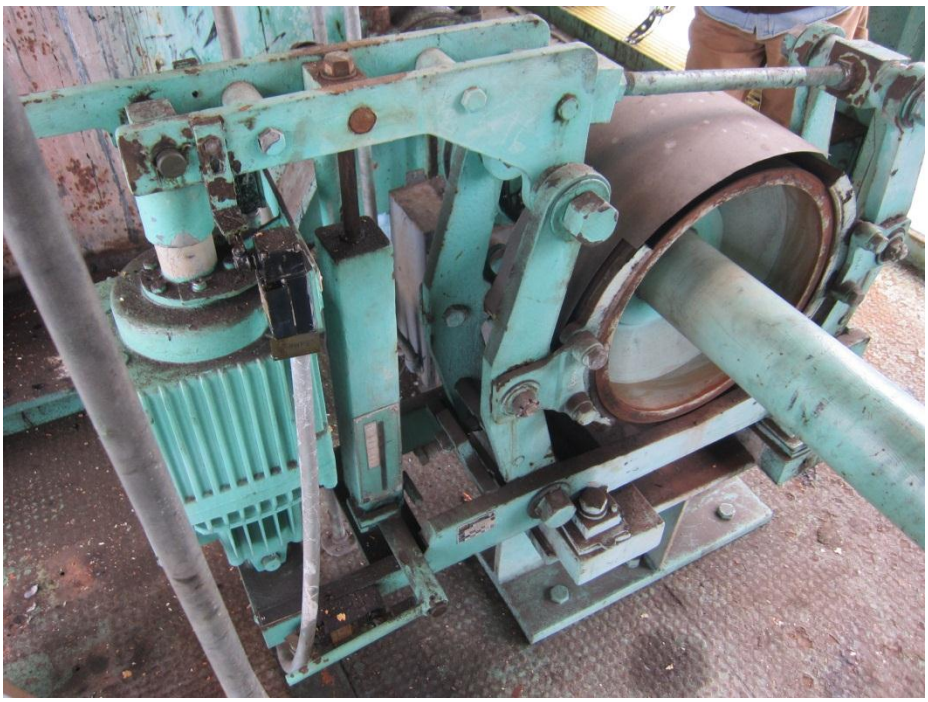

Photo No.: M-4
Location: Northwest Machinery Brake
Description: Typical condition of brake. Note sheet metal cover over brakewheel and axial misalignment.

Photo No.: M-5
Location: Southwest Brakewheel
Description: Axial misalignment of brakewheel, corrosion on brakewheel.

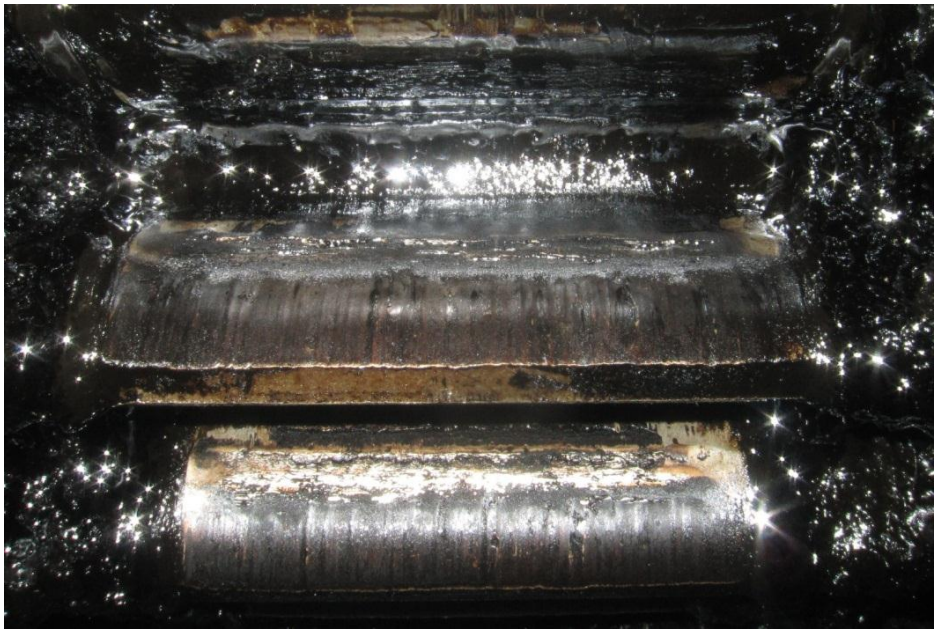

Photo No.: M-6
Location: Northwest Pinion Opening Face
Description: Heavy scoring on tooth and plastic flow on tip of tooth.

Photo No.: M-7
Location: Southeast Rack Opening Face
Description: Note scoring and depression at pitch circle.

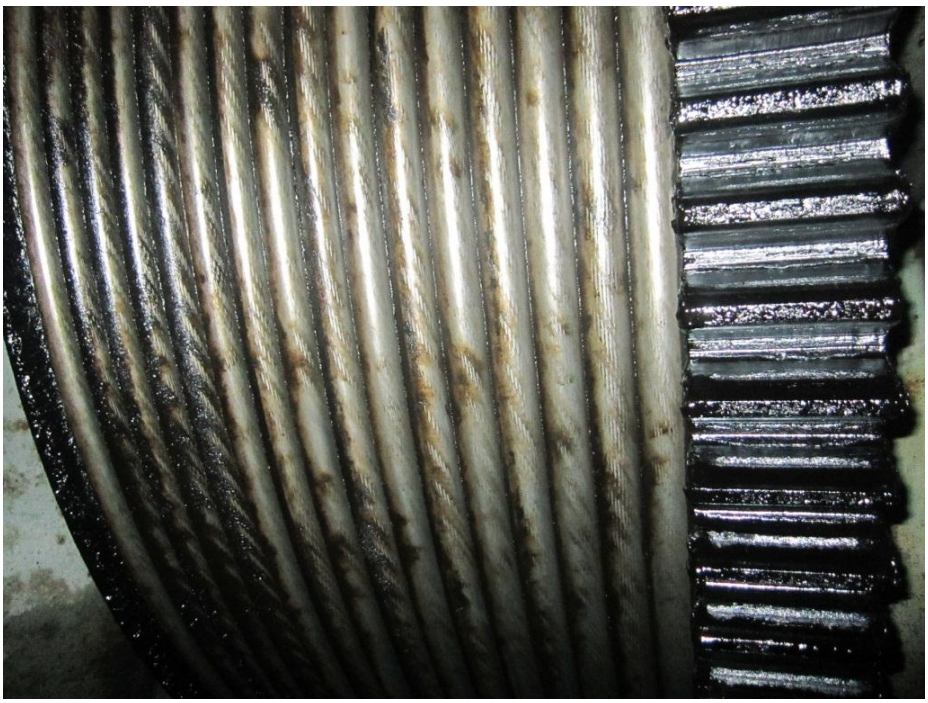

Photo No.: M-8
Location: Northwest Rope Grooves
Description: Note minor surface rust and corrugation in grooves.

Photo No.: M-9
Location: Northwest Counterweight Ropes Connection at Lift Span
Description: Typical condition of sockets and connection.

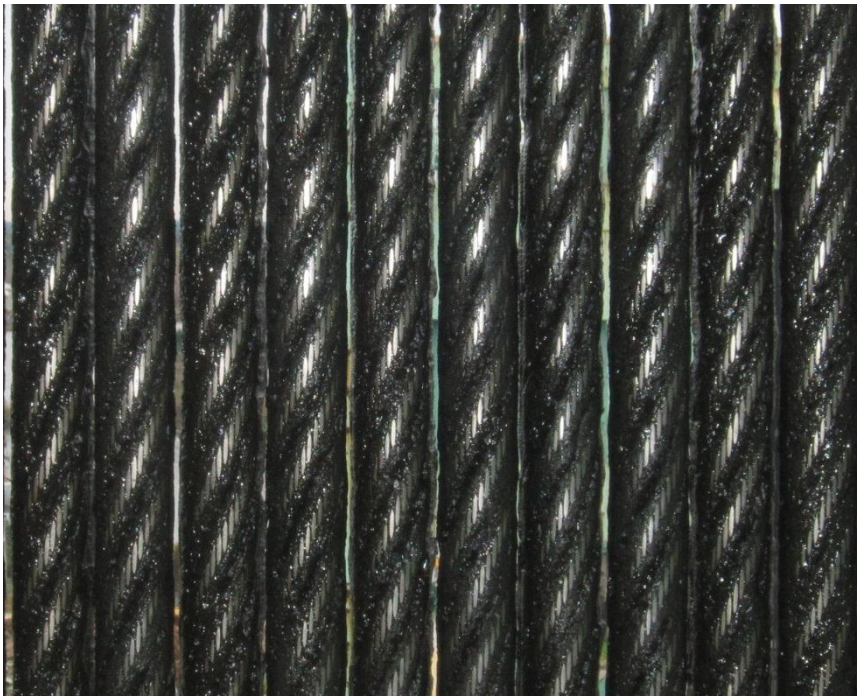

Photo No.: M-10
Location: Northeast Counterweight Ropes
Description: Typical condition of Ropes. Note flat spots of 3/8” to 1/2".

Photo No.: M-11
Location: Southeast Counterweight Ropes Counterweight Connection
Description: Heavy grease accumulation on top of counterweight. Note no railings present.

Photo No.: M-12
Location: South Span Lock
Description: Corrosion throughout. Note unattached lockbar rod boot.

Photo No.: M-13
Location: Northeast Span Guide
Description: Typical condition of guide and rails.

Photo No.: M-14
Location: Southwest Span Guide Rail
Description: Kink in guide rail.

Photo No.: M-15
Location: North Centering Device Receiver
Description: Note deterioration of connection fasteners and corrosion throughout.

Photo No.: M-16
Location: North Centering Device Guide Lug
Description: Debris present on assembly and deteriorated anchor bolts.

Photo No.: M-17
Location: North Screw Jack
Description: Typ. condition of screw jacks on north side. Note surface rust.

Photo No.: M-18
Location: Southwest Span Guide Shoe on Retractable Span
Description: Heavy corrosion on shoe and surface rust on rail.

Photo No.: M-19
Location: Upper Level Electric Baseboard Unit
Description: Worn units in need of replacement.

Photo No.: M-20
Location: Lower Level Furnace
Description: Unit appears to be a recent installation.

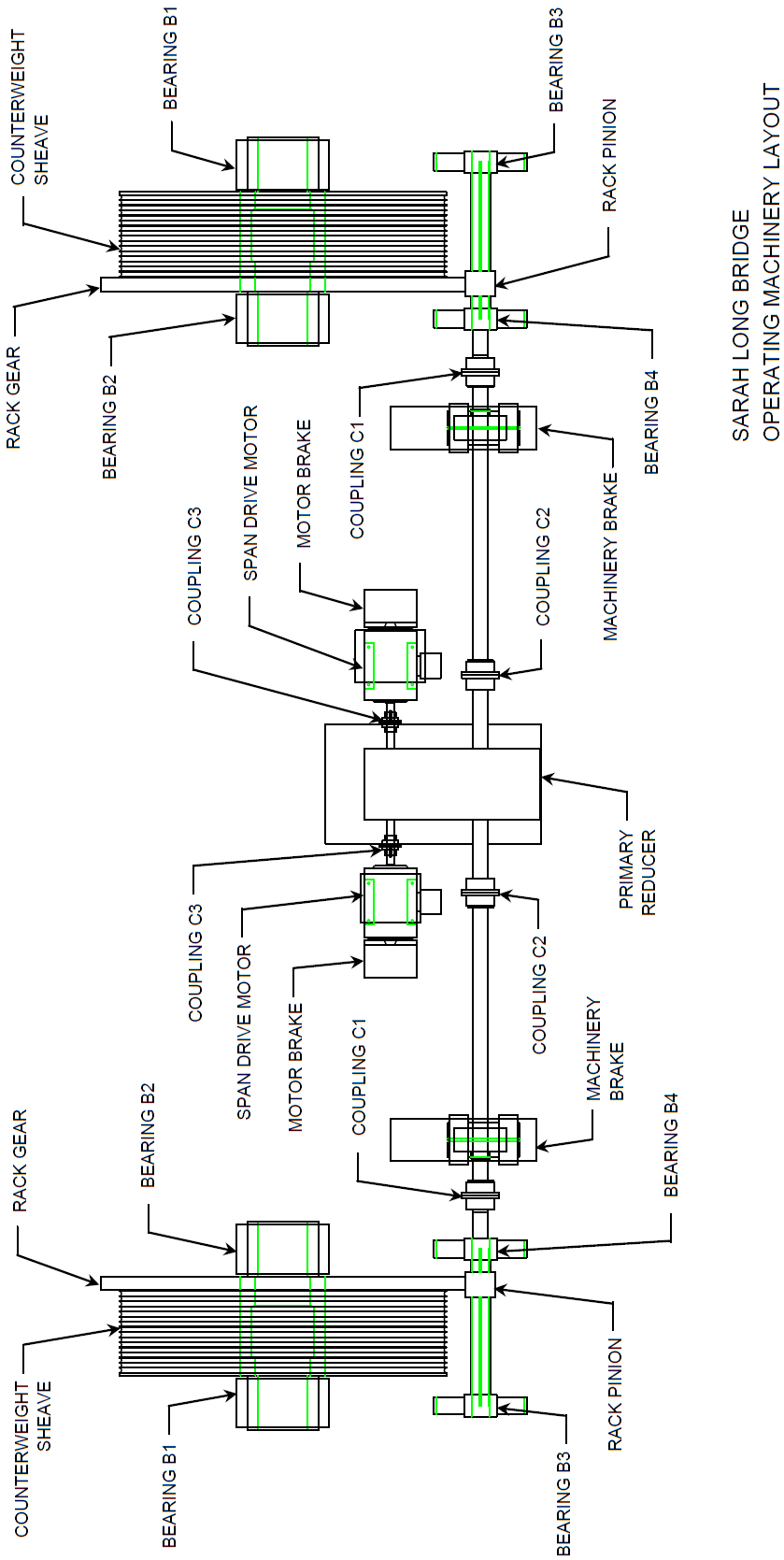

SARAH LONG BRIDGE
OPERATING MACHINERY LAYOUT

Table M-1: Operating Machinery Bearing Clearances

Bearing Mark, Location Description	Recommended RC6 Clearance	Previous Clearance	Measured Clearance
North Tower East Bearing B1*	0.008-0.018”	0.120”	0.122”
North Tower East Bearing B2*	0.008-0.018”	0.100”	0.102”
North Tower East Bearing B3	0.003-0.010”	0.013”	0.012”
North Tower East Bearing B4	0.003-0.010”	0.007”	0.006”
North Tower West Bearing B1*	0.008-0.018”	0.098”	0.096”
North Tower West BearingB2*	0.008-0.018”	0.106”	0.106”
North Tower West Bearing B3	0.003-0.010”	0.013”	0.012”
North Tower West Bearing B4	0.003-0.010”	0.019”	0.009”
South Tower East Bearing B1*	0.008-0.018”	0.062”	0.062”
South Tower East Bearing B2*	0.008-0.018”	0.048”	0.057”
South Tower East Bearing B3	0.003-0.010”	0.011”	0.013”
South Tower East Bearing B4	0.003-0.010”	0.017”	0.015”
South Tower West Bearing B1*	0.008-0.018”	0.042”	0.047”
South Tower West Bearing B2*	0.008-0.018”	0.062”	0.076”
South Tower West Bearing B3	0.003-0.010”	0.010”	0.012”
South Tower West Bearing B4	0.003-0.010”	0.008”	0.008”

*Bearing clearance noted is between the trunnion journal and cap, not a running fit.

Table M-2: Operating Machinery Gear Tooth Measurements

Tooth Thickness Pinion Gears measured at addendum = 0.831” Rack Gears measured at addendum = 0.799”			
	Chordal Thickness		
Gear Mark	**Theoretical**	**Previous**	**Measured**
South Tower West Rack Gear	T- 1.25	T- 1.200” M- 1.215” H- 1.226”	M- 1.216”
South Tower West Pinion Gear	T- 1.25	T- 1.228” M- 1.127” H-1.130”	M- 1.135”
South Tower East Rack Gear	T- 1.25	T- 1.164” M- 1.180” H-1.183”	M- 1.204”
South Tower East Pinion Gear	T- 1.25	T- 1.200” M- 1.095” H-1.100”	M- 1.124”
North Tower West Rack Gear	T- 1.25	T- 1.230” M- 1.229” H-1.225”	M- 1.227”
North Tower West Pinion Gear	T- 1.25	T- 1.105” M- 1.102” H-1.116”	M- 1.102”
North Tower East Rack Gear	T- 1.25	T- 1.211” M- 1.215” H-1.172”	M- 1.216”
North Tower East Pinion Gear	T- 1.25	T- 1.121” M- 1.116” H-1.115”	M- 1.117”

ELECTRICAL INSPECTION

Inspection of the Lift Span

Motors

The main Motors are flux vector driven 4 pole, 100 hp, 460v, 3 phase induction motors, Blue Max model type by Marathon. There are 2 main motors in each tower. The motors are equipped with integral brakes, heaters and encoders. The integral motor brakes are Stearns 330 lb-ft brakes. The encoders are BEI industrial encoders. The motor assemblies were in new condition.

The span lock motors have integral brakes. A cam limit switch is mounted to the span lock gear box. The motors' exteriors are heavily rusted. The cam limit switch exterior is also rusted. However, the interior is in good condition.

Machinery Brakes

The machinery brakes are drum brakes. The brakes are released by motor driven hydraulic thrusters. The thruster motors are Mondel brake motors. Each brake is equipped with 3 limit switches for brake released, brake set, and manual operation indication. The thruster motors are in moderate to good condition, with oil and dirt on most of the motor housings. The limit switches are also in moderate to good condition. Most limit switches are heavily covered in oil or grease, but serviceable. (See Picture E-06).

The northeast machinery brakes manual release handle is wired to a ring bolt in the floor to prevent release due to vibration. (See Picture E-12) The brake should be adjusted to rectify this problem.

Control system

The south tower machinery is controlled by the south tower control cabinet. This cabinet contains 2 GE Fanuc Versamax PLC's, powered by Sola power supplies and a long range wireless ethernet radio system by AvaLAN. A Hengstler encoder connected to a wire spool connected to the counterweight is located in this cabinet. This encoder is used for span height detection. The cabinet was heated and lighted. The interior of the cabinet was in new condition, with some dirt on the bottom. The cabinet was a NEMA 4, non stainless steel cabinet.

The north tower equipment is similar to the south tower equipment. The north tower control cabinet is in new condition inside and out.

There are fiber optic aerial cables between the north and south tower machinery rooms. The cables, mounting, fiber junction boxes are all in new to good condition.

There was legacy, unused abandoned equipment located in the machinery rooms:

South East Torque Monitoring System, south machinery room.

Stearns Heavy Duty Clutch Rectifiers, south machinery room.

North East Torque Monitoring System, north machinery room.

There are 3 methods of measuring skew and height. Span position is detected by encoders on the sheaves, encoders in the drive motors, and the encoders on the wire spools in the north and south tower control cabinets. The sheave and spool encoders are manufactured by Hengstler.

The control house consists of a control room on the first floor and an operator accommodations room upstairs. There is no running water or sewer in the control house.

The control house is equipped with a telephone, incandescent lighting, emergency lights, and heat.

The control room contains 2 PLC cabinets, 2 panel boards, the control desk, monitors for the CCTV system, marine radios, and handheld radios for the bridge staff.

The control desk contained a touch sensitive display, some manual controls, and the generator control mounted on the left side of the control desk. The manual controls operated the traffic signals, gates and span locks. The control desk had indicators for brake status, motor status, and emergency stop as well as some bypass controls.

The control desk display was used for most bridge operations. The display had controls and indicators for traffic lights, gates, span locks, marine navigation lights, aviation obstruction lights, span height, and skew. The operator could automatically raise the span to preset heights, depending on marine traffic. Alarms were displayed and logged. Motor parameters, such as current, speed, etc. are recorded and logged.

The interlocking was checked under PLC operation. The following tests were made:

Barrier gates could not be lowered before the warning gates

The span could not be moved (raised or lowered) while the barrier gates are up

The span could not be moved while the span locks are pulled.

The barrier gates or warning gates cannot be raised while the span locks are pulled.

The warning gates cannot be raised before the barrier gates.

The traffic lights cannot be turned green while the warning gates are down.

A Cummins Onan generator control and alarm indicator was located on the left side of the control desk. This annunciator indicates generator battery condition, generator running or stopped, utility power available, motor parameters and alarm conditions.

A railroad span interlock span control circuit was also located in the control room.

The PLC equipment is located in 2 cabinets to the right of the control desk and the CCTV monitors. Both cabinets and equipment were in good to new condition. The electronics in the cabinets were powered by uninterruptable power supplies. The PLC's were based on the GE Fanuc Genius system.

Inspection of the Retractable Span

Motors

The retractable railroad span is lifted by 8 motor-driven screw jacks. One motor is mounted at each span corner and drives a pair of jacks. The span is moved horizontally by a motor located on the south end of the retractable structure.

The span is moved in the horizontal direction by a Westinghouse 440v, 3 phase, 1725 rpm, 15 hp, wound rotor motor. The motor drives the span via a gear and chain system to the railway wheels. The motor is controlled by rotor resistors. The resistor bank is made by Cutler-Hammer, and is located close to the motor.

Control System

The span is controlled through a control panel and contactors located south of the retractable span along the west edge of the bridge. This area is below, and accessible from the roadway. The control

system was not working as designed. The retractable span was moved with personnel evaluating the span height and skew for the operator. The limit switches determining the horizontal span position were mechanically unreliable. Most of the other limit switches are heavily covered in grease, oil, and dirt. (See Picture E-02).

The cabinets were stainless steel NEMA 4. The cabinets were in good condition. Most of the equipment in the cabinets was in good condition. Some equipment had minor surface corrosion.

There was an oil pump cabinet on the north side of the span that is used to pump oil to the screw jacks through piping attached to the roadway span above the retractable channel. This cabinet was a stainless steel NEMA 4 cabinet. However water had accumulated on the bottom of the cabinet, and poured out of the cabinet when the door was opened. (See Picture E-03). The equipment in this cabinet was above the water, and was in moderate condition.

Marine Navigation Lights

Marine navigation lights are installed on the main and retractable railway piers and spans. The main lift span has 2 navigation lights on each pier, and 2 lift span center channel lights. The retractable railway span has 2 navigation lights on each pier and lift span center channel lights.

The marine navigation lights were older incandescent models.

Frequent access to the lights is required for bulb replacement. Personnel access to several of these lights is difficult and requires span movement.

Miscellaneous

Power and control to the moving retractable span is routed through spring loaded cable reels, which were recently replaced.

Inspection of Ancillary Items

Gates

There is one barrier gate on the north side of the bridge and one barrier gate on the south side of the bridge. Each barrier gate has a single arm which blocks both traffic lanes. The gate is supported by the actuator housing, and a structurally enhanced cradle when the arm is down, to support the forces required to stop a vehicle. Barrier gates include the actuators, gongs, arms, actuators, and limit switches. The gates are manufactured by B&B Electromatic. Each barrier gate has a stainless steel NEMA 4 box behind the actuator. The box contains a temperature sensor, transformer, external controls for hand, off, automatic operation, and indicator lights for open and closed positions. The transformer is a 9kva 3 phase 480v to 208y/120v.

The south barrier gate was in moderate to good condition. The actuator housing had some rust on the outside and top cover. There was some minor rust on some of the arm components. One of the cords between the flashers and the actuator housing had pulled out of the coupling on the housing. There was some rust on some wire terminal screws. The motor was in good condition. Behind the actuator housing is a stainless steel NEMA 4 cabinet. The label for the green power on light was missing.

The north barrier gate is located on the west side of the bridge. The interior of the actuator housing was in good condition. There was minor light rust on the tops of components inside the actuator housing. There was minor rust on the actuator housing bottom. The stainless steel NEMA 4 transformer cabinet behind the gate was in good condition both inside and outside.

The warning gates block only the oncoming traffic lanes. The gates include the actuator housing containing motors, limit switches, gear boxes, etc. The actuator housings contain a limit switch disabling the gate when the access doors are opened. The gate motors are Baldor 0.5 hp 208-230/460 volt 1725 rpm.

The south warning gate housing exterior had rust over the entire top surface and spotted rust on the sides. The power cord to the flashers was taped to the top of the housing. Duct tape secured the cord to the gate arm. (See Picture E-07). The cord should be secured with approved clamps. The motor was in good condition. There was some rust on the worm gear housing. There was also some dirt and grease in the cam limit switch. Electrical tape was used to keep the tip flasher housing closed. The housing should be repaired or replaced. The flasher cord was secured by wire to parts of the gate arm. The cord should be secured by approved clamps.

The warning gate was in good condition. However, there was some rust on the housing exterior. The gate motor was in new condition.

North Generator and Service Entrance

The main service entrance is in the vicinity of the generator. The utility transformers are located on the north side of the bridge near the generator. Beneath the pole transformers are the service entrance boxes located on the west side of the roadway. These boxes are in new condition. These boxes are fed from the pole transformers. These boxes in turn, feed the transformer switches and boxes located in the generator area, under the north end of the bridge.

The generator area contains:

TVSS, 480v, 3 phase, 400 amps, from (main, generator)

Main Disconnect, 480y, 3 phase, 400 amps

Transfer Switch, 480y, 3 phase, 400 amp, ASCO power transfer switch, Emerson network

MCC disconnect, from transfer switch, Control panel, ASCO Power Technologies

Transformer, 7.5kva 480v to 120/240

Power Panel, 480v, 3 phase, 400 amps, 7.5kva, from transfer switch

Retractable Span Disconnect, 480y, 3 phase, 200a, from transfer switch

Surge Protector

Generator

All boxes are stainless steel NEMA 4 junction boxes. All boxes are in good condition.

The generator is a Caterpillar standby rated generator, 218.8 kva, 175 kw, 480/277 v, 3 phase, 1800 rpm generator.

The generator is not equipped with a load bank.

South Generator and Service Entrance

The south generator and service entrance is located under the south end of the roadway span, west of the railway tracks. This area contains:

Generator House

Main Switch (disconnect), Square D

Surge Protector

Large "Junction Box"

Transformer, 5kva, 1 phase, Acme

Disconnect located on the Large "Junction Box"

Convenience Receptacles

Work Lights

Small "Junction Box"

Transfer Switch, 400 a, 480 v, ASCO

Main Transformer

Service Entrance Meter

The service transformer was built by Howard industries for Northeast Utility Service. The transformer was dated 03/13/03. The exterior of the transformer is in good condition. However there was some rust on the top surfaces.

A number of outside electrical cabinets and boxes have been recently replaced with NEMA 4 cabinets. Theses cabinets are in good to new condition. There are a number of electrical boxes and cabinets which were not replaced with NEMA 4 cabinets.

The service meter is mounted on a metal box. The box has rust of over 20% of the exterior surface. (See Picture E-10).

The surge protector is mounted in a heavy metal box. The box has rust over the entire top surface. The sides are completely rust covered. The door is rust covered over about 20% of its surface. Metal was scaling off the box due to rust.

The "Main Switch" is a Square D disconnect is a metallic box, rusted over the entire exterior surface. (See Picture E-09).

The generator house is in new condition. The generator house contains the generator, incandescent work lights, emergency lights, battery charger, and vents. The generator house is equipped with a fire extinguisher and ventilation fan, but no fire detection system.

The generator is an Onan standby rated at 150 kw, 187.5 kva, 3 phase, 1800 rpm, 277/480v.

The generator is started with a single 12 v battery. The battery is charged by a Cummins Onan battery float charger. The charger is in good condition. The charger is sitting unsecured on top of the generator.

The generator is not equipped with a load bank.

Aviation Obstruction Lights

The aviation obstruction lights consisted of 2 flashing red lights on the north and south tower tops. The obstruction lights are 300 mm, 620w, 130v, incandescent beacons manufactured by TWR lighting, Houston Texas. There are two 620w bulbs in each light. The lights are actuated by photocells on the respective towers. Because separate photo cells are used, each light will turn on and off at different times during sunrise or sunset. The flashing between the north and south tower is not synchronized, and should be modified to be in synchronization.

Marine Navigation Lights

The marine navigation lights on the railway retractable span were older style lights. (See Picture E-04). The housings and lenses ranged from moderate to good condition. Bulb replacement required the span to be moved so that personnel could access the lights. Access ladders or walkways should be installed to access these lights. The conduits supplying these lights were in moderate to poor condition, and should be replaced.

The main span pier lights were also old style lights. The light housings and lenses ranged from moderate to good condition. Some of the covers have missing bolts or fasteners and are held closed by clamps. (See Picture E-11). Most of the conduits supplying the pier lights are corroded, bent, and crushed and require replacement.

All of the marine navigation lights used incandescent bulbs. Although the light housings were serviceable, they should be replaced with modern fixtures, and LED lighting to increase reliability.

Traffic Signals

Traffic stop light signals are located near the warning gates, barrier gates, and on the towers. The traffic lights located near the warning gates consist of 2 lights on an arm over the roadway and 1 light mounted on the pole. The Barrier gate stop lights are mounted on a conduit. There are two stop lights mounted for each direction at the towers.

The traffic lights were in moderate to good condition. Some of the Red lights were not operational, particularly in the vicinity of the south warning gate.

A "Workers on Bridge When Flashing" sign was installed on the side of the bridge. This sign was operational and in good condition.

Yellow pole mounted flashers were mounted on the north side of the bridge for north bound traffic. This unit was used when repairs were made to the bridge foundation in this area. The flashers are not operational and have been abandoned. The flasher lights are in good condition, although one flasher is missing a hood. The junction box between the flasher lights has deteriorated so that the bottom of the box is exposed. See picture E-05.

The traffic light near the north barrier gate was mounted on a heavily corroded conduit. (See picture E-01).

Roadway Lighting

Roadway lights are mounted on pedestals mounted to the roadway structure. Most lights were in moderate to good condition. Some lights had water in the lenses. The roadway lights were only observed during daylight, and not observed in operation.

The roadway lights are powered independently of the main bridge service entrances. The south roadway lights are serviced by a meter located along the east side of the road south of the warning gates. The meter is in good condition.

The north roadway lights are serviced by a meter located along the west side of the road, near the warning gate. The meter is in good condition. There were several junction and disconnect boxes near the meter. The boxes were in good condition, with some rust, particularly on the top surfaces.

CCTV

Closed-Circuit Television (CCTV) Cameras are positioned to monitor marine and vehicular traffic. There are 4 CCTV monitors in the control room, and a monitor in the crew room in the control house. Most of the cameras are Pan-Tilt-Zoom (PTZ) cameras, controlled from the control room.

There are 2 PTZ CCTV cameras on the railway level in a position to monitor rail traffic.

There are 2 PTZ CCTV cameras mounted at each end of a main span pier positioned for marine traffic. These cameras were protected from roadway level snow plow debris by metal hoods.

There are PTZ CCTV cameras mounted at the roadway level for traffic monitoring in the vicinity of the warning and barrier gates, and near the lift towers.

The control room equipment was in good condition. The external PTZ housings were in good condition. Some of the roadway PTZ CCTV housings were not securely mounted. The CCTV PTZ camera on the north side, east edge of the bridge is mounted to a pole with nails and chains. The mounting system should be changed to a more secure system.

Electrical Boxes

The NTL and NTP panel boards in the north tower machinery room had wires exposed around the edges of the breaker boards when the boxes were opened. This should be corrected so no wires are exposed unless the breaker panel is opened, not just the NTL or NTP box. (See Picture E-08).

The electrical panels in the north and south generator areas are discussed in the Generator and Service Entrance Sections.

There are MCC rooms next to the control house at the roadway level, and at the north and south tower pier levels. The MCC equipment next to the control house was in good condition. The pier level MCC rooms contained transformers, motor drives, and motor starters and overloads for brakes, span locks, gates, etc. The rooms had heat, air conditioning, smoke detection system, and door open alarms, all in good condition.

The submarine cable cabinets are mounted at the pier level. The submarine cables are no longer used. The cables have been severed. The cabinets are stainless steel NEMA 4. The bottoms of the cabinets were heavily corroded. These cabinets function as signal or control junction boxes.

Intercom

There is a non-operational public address and intercom system. Units are located in the south machinery room, north machinery room, and control room.

The machinery room units are mounted in plastic enclosures with a loudspeaker. A handset is located inside the plastic enclosure. The systems are Gai-Tronics systems. The units were physically in good condition, but not operational.

There is a phone system in the vicinity of the south warning gate that serves an unknown purpose. The phone system at best is unreliable and may not be operational.

Fire System

There is no fire alarm system in the north or south machinery rooms. An ABC fire extinguisher is located in the machinery rooms.

The south machinery room extinguisher is pressurized properly, but the inspection is out of date.

There is no fire detection system in the south generator house. The south generator house is equipped with a fire extinguisher dated 2011.

Miscellaneous

The machinery rooms are equipped with material hoists, motors and controls. The material hoists have reported not been operational since 1988. The motors are in moderate condition and not maintained.

An alarm is installed warning personnel on the roadway of the lowering counterweight has been updated from a limit switch system to an infrared detector system. The alarm activates a strobe and a bell. The components of the system are in moderate to good condition. Unused equipment should be removed.

There were infrared sensors over the railway on the northwest side of the main span. They were in good condition. Their operation and monitoring systems were unknown.

Recommendations

General

The following recommendations for electrical equipment have been developed based on field review of the existing equipment.

Electrical items will be replaced with new equipment based on the following criteria:

- The equipment is in poor condition.
- The item or the location of the item does not meet regulatory requirements.
- The item will require removal as a result of mechanical, structural, architectural, etc. design modifications.
- High cost items, which will require replacement within 10 years or have a greater than 60% life expectancy remaining will be judged on a case by case basis.
- Low cost items, in other than new condition items, which will require replacement within 20 years.

Lift Span

- Replace the south approach electrical service disconnect, TVSS and other equipment with corrosion problems.
- Replace four machinery brake limit switches, two in each tower machinery room identified as northeast, northwest, southeast, and southwest.
- Replace and refurbish counterweight lowering roadway warning equipment.
- Replace all 4 span fully seated limit switches.
- Replace all span lock motors and associated limit switches.
- Replace the north and south tower material hoist system electrical components.
- Replace all marine navigation lights on the main span, including pier lights and bridge channel lights. Replace any associated conduits and junction boxes showing any signs of corrosion or damage.
- Replace the north tower and south tower aviation obstruction lights with LED equipment. Mid height obstruction lights shall be considered. Use the PLC to activate and deactivate the tower aviation obstruction lights at sunrise and sunset. Flashing of the lights will be synchronized.
- Replace the oncoming warning gates. Install two new warning gates for off going traffic to be in compliance with the standards.
- Replace the 2 Barrier gates. Ideally only the housings require replacement. However, because the housings are intricately connected with internal equipment, just changing the housing may not be possible.
- Replace all traffic signals, poles, and mounting equipment. Traffic signals shall be 12” LED type.

- Update PLC software as required for the refurbishments.
- Add work/access lighting underneath tower machinery rooms lighting the counterweight tops.
- Restore missing labels on all electrical cabinets, barrier and warning gates. Check, verify, and label all electrical panel schedules.
- Replace tower to roadway ladder work lights inside tower legs. Replace locks on towers to allow egress exit.
- Repair northwest machinery brake manual release mechanism so that vibration cannot cause a manual brake release.
- Install in sight disconnects for all motors and machinery brakes in the north and south tower.

Retractable Span

- Replace marine navigation lighting, including pier lights and bridge channel light.
- Completely revamp the control system for the railway retractable bridge system. The retractable span should be capable of control from the control room, and the retractable span area. Replace all motors, encoders, resolvers, and limit switches.
- Install security lighting at the retractable span to allow use of CCTV cameras during nighttime hours.

Ancillary Items

- Repair temporary and insecurely mounted CCTV pole mounting systems.
- Update control room CCTV monitor and PTZ (Pan Tilt Zoom) systems. Replace monitors with flat screen monitors. Replace hardware based camera and monitor control with a software based system.
- Install new CCTV cameras for roadway monitoring around the main lift towers.
- Install new CCTV cameras in the vicinity of the retractable railway span, both to monitor span movements, rail and marine traffic.
- Replace existing CCTV cameras for system wide compatibility.
- Install remote CCTV monitoring capability at NHDOT's office located at 10 Ranger Way, Portsmouth, New Hampshire.
- Equip the following areas with fire alarm system, with alarm indications to the control house.
    i. North machinery room
    ii. South machinery room
    iii. MCC room, roadway level next to control house
    iv. North pier level MCC room
    v. South pier level MCC room
    vi. South Generator house
    vii. South Generator area
    viii. North Generator area
- Remove unused equipment in the tower machinery rooms.

- Remove unused traffic control equipment, particularly the abandoned yellow flasher on the bridge north end.
- Replace the submarine cable cabinets which are presently serving as junction boxes.
- Remove old, disconnected, and abandoned submarine cables.
- Replace roadway lighting with full cutoff dark sky compliant fixtures. Use of LED lighting shall be considered.
- Replace Intercom system.
- Install load banks for the north and south generators.
- Securely mount the south generator battery charger.
- Install OSHA compliant access platforms and ladders to all aviation obstruction and marine navigation lights, and other span mounted equipment.
- Repair breaker panels, including the NTL and NTP panels, removing any hazardous conditions.
- Remove the phone system in the vicinity of the south warning gate. Replace this system with the intercom system.
- Install a lightning protection system. A lightning protection system is not currently installed on the bridge.
- Upgrade electrical grounding system to meet LFRD requirements.
- Perform other electrical work as determined to be necessary as a result of structural, mechanical and architectural work, such as heat and ventilation.

Photo No.: E-01
Location: Stop Light mount and conduit
Description: Corrosion at mount base

Photo No.: E-02
Location: Rail retractable span, typical limit switch
Description: Switch covered with grease and dirt.

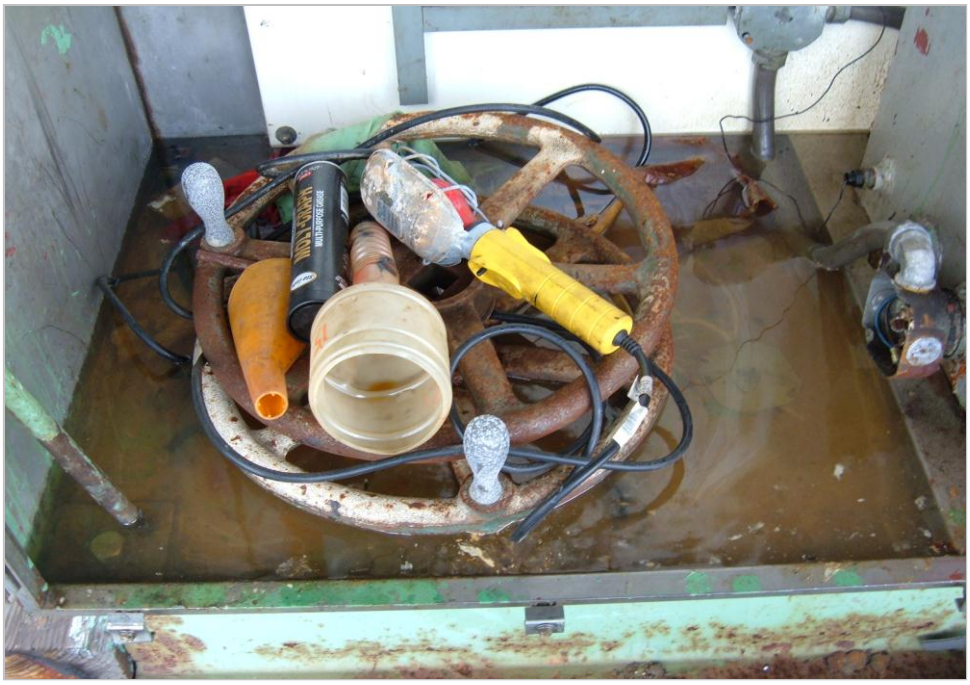

Photo No.: E-03
Location: Railway Retractable span oil pump cabinet
Description: Bottom flooded with water

Photo No.: E-04
Location: Railway Retractable span, typical Marine Nav Light
Description: Older style fixture. Difficult maintenance location

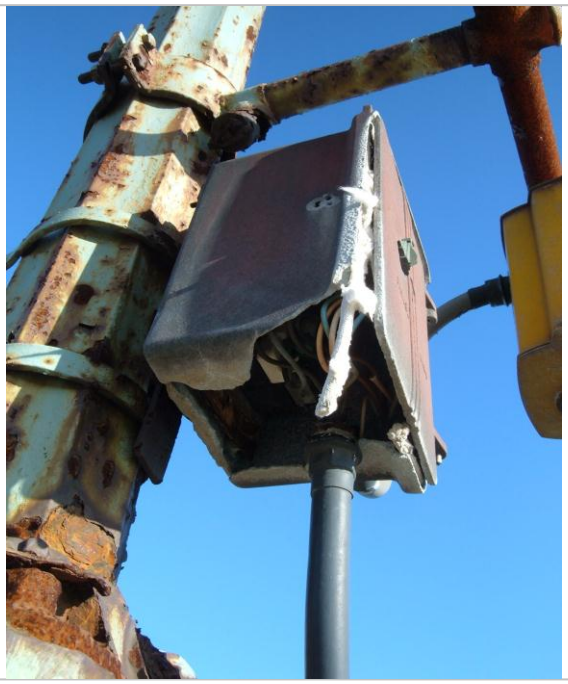

Photo No.: E-05
Location: Traffic flasher junction box, North end
Description: Heavily corroded junction box

Photo No.: E-06
Location: SW machinery brake limit switch
Description: Typical condition, grease and dirt

Photo No.: E-07
Location: South warning gate
Description: Flasher cord improperly secured to gate arm

Photo No.: E-08
Location: South tower machinery room box NTP
Description: Wires behind breaker board exposed

Photo No.: E-09
Location: S Generator area, main switch
Description: Rust over exterior surface

Photo No.: E-10
Location: S Generator area, service meter
Description: Rusted electrical box

Photo No.: E-11
Location: N pier marine nav. light
Description: Typical condition, Clamp holding cover closed

Photo No.: E-12
Location: NE machinery brake
Description: Brake release handle wired to floor

BUILDING STRUCTURES INSPECTION

Inspection of the Control House

The Control House is a two-story building with the control desk on the first level and operator accommodations on the second level. The original control house was a thirty by eight foot single story building original to the bridge. In 1971 second story addition was added adding a sitting area and rest room. In 2011 Hoyle, Tanner & Associates, Inc. prepared construction documents for the renovation of the control house. On the date of the inspection, none of the work described in the 2011 drawings had been performed and there was no evidence of preparatory work.

Exterior

The exterior is painted corrugated steel, with aluminum windows and a stainless steel entry door. The corrugated steel panel is in poor condition, with extensive oxidation, particularly at the base of the building where snow, ice and salts accumulate, as well as at openings in the envelope for doors, windows and other penetrations. At many of these locations the metal substrate has been consumed by the oxidation process.

There is evidence of remedial repairs, with different color patches above the ribbon bay window on the east side of the first floor and above the entry door on the south elevation of the building. Conversations with maintenance and operator staff indicated that the material is a fiberglass-reinforced-resin, intended to prevent water leaks into the building interior at those locations. These patches appear to be at least partially ineffective, as indicated by the presence of water on the interior sills during the building inspection. Additionally, expanding spray-foam insulation has been used to patch holes in the metal panel where it has rotted away. Some of those holes have been filled with expanding spray-foam insulation. That product is generally effective at eliminating drafts and preventing bulk water intrusion, but is not suitable for permanent, exposed use as a weather barrier. It retains and transmits moisture, which exacerbates the oxidation process.

Plywood is installed along the length of the eastern exterior wall below the ribbon window and sealed with expanding spray-foam insulation in the cells of the corrugated metal. That assembly is painted to match the building. The condition of the metal beneath the plywood at this location is unknown, but should be assumed to be in the same, or worse condition as that around the rest of the building due to prolonged exposure to moisture in the plywood and because that location is vulnerable to corrosive chemicals used in roadway de-icing operations.

The exterior windows are generally in poor condition. There are five types of windows installed throughout: fixed pane, awning, sliding, double hung and ribbon-bay. The window at the north face of the second floor is a residential-type double hung with a vinyl frame and insulated glazing. All of the others are non-thermally broken aluminum frames with single pane glass, which are thermally inefficient. The awning windows have makeshift opening limiters made from synthetic cording. Sliding windows are difficult to operate. Glazing at three of the panels on the ribbon-bay window has been replaced with aluminum panel. Corrosion is evident on the interior of several frames. There is tape or

pressure-adhesive applied foam tape at the perimeter of most windows, and air infiltration was observed during the visit.

Miscellaneous wall penetrations include: three (3) observation mirrors; various antennae; one (1) loudspeaker; exterior light fixtures; gas service; one (1) ladder; one (1) combustion exhaust vent from the gas-fired unit-heater; one (1) abandoned exhaust stack and approximately five (5) conduit. Additionally, there is one abandoned through-wall penetration which has been sealed with a piece of PVC pipe, a flexible pipe repair coupling and expanding spray-foam insulation. Many of these penetrations show evidence of previous leak repair. Due to the relatively small number and diameter of conduit penetrations through the wall, it is expected that more conduits penetrate into the MCC cabinets through the first floor structure.

The roof was inaccessible for close inspection as the exterior ladder on the west side of the control house stops short of roof level. Observation was possible from the lift-span at approximately 75', at which point a metal standing seam roof with surface rust throughout was noted. There was no paint or protective coating apparent. The roof appears to have a very slight slope towards the west – perhaps 1/4" per foot. There are no gutters or conductors to direct water away from the face of the building, which may be a contributing factor to the poor condition of the metal panel on that elevation.

Interior

The interior shows signs of water damage and extreme wear. The floor finish is damaged. The interior walls are exposed plywood and the ceiling is lay-in acoustical ceiling. The window sills and trim are wood. Many of the sills and trim are water damaged. Interior doors are hollow core. The exterior door is stainless steel and is in good condition. The lights are surface mount fluorescent. Make shift task lighting is randomly wall mounted. Shading devises at the windows provide glare control and are typically roller shades; additional make shift shading devices have been tacked to some windows to provide added glare control. Hooks, shelving, lighting have been mounted to the walls to provide added storage. The space is cluttered and inefficient. The lower level contains electrical equipment and control desks. The lower level is heated by gas furnace and electric baseboard heat. A propane tank fueling the gas furnace sits on the walkway near the door. The upper level contains a restroom/ electrical room with a non-functioning toilet. The floor around the toilet is sagging and needs to be reinforced. The upper level is heated with electric baseboard heat. The upper level contains a roughly built in break area with electric stove/ oven and shelving for entertainment system. This blocks part of the windows on the second floor. Many of the casement windows are no longer functioning properly and are held closed with string. Conduit and outlets are surface mounted on the walls as needed.

Inspection of the Machine Room

Exterior

There are two Machine rooms, one at the top of each tower. The east and west facades are floor to ceiling glazed bays with steel pilasters between. The glazed portions are divided light single pane fixed windows. The center section functions as a hopper window, allowing cross ventilation when both side are open. These Machine rooms are painted to match bridge. The aluminum door no longer fits tightly

within its frame. Surface rust is evident on the exterior of the machinery house. The roof also shows evidence of rust.

Interior

The ceiling is opened to the exposed trusses supporting the roof. The space is illuminated Eight (8) overhead incandescent fixtures with task lighting. The machinery sits in the middle of the room with electric panels mounted to the pilasters in the wall. The floor is steel diamond plate raised floor which is rotting.

Inspection of the Storage Shed

Exterior

Exterior is similar to the Control House. It is in better condition because it has fewer penetrations. The roof has no gutters or downspouts. The general condition is poor.

Interior

The interior of the shed has been recently renovated. Gypsum Board and Deck at ceiling appear to be in good shape.

Recommendations

Control House

Given the age of the control house, the deteriorated condition of the exterior and the ineffectiveness of the interior layout a complete renovation is recommended. The exterior cladding system and roof system should be removed to the framing. All unused penetrations should be sealed. Replace with new exterior cladding system and roof system. All exterior finishes should be of the highest corrosion resistance. The roof system should be designed to drain properly with gutters and downspouts to drain to water way below. All doors and windows should be replaced with stainless steel insulated doors and windows. The entire exterior enclosure system should perform in accordance with the requirements of the International Energy Conservation Code.

The interior should be fully gutted. Wall boards, flooring, light fixtures and ceilings should be replaced. Electrical wiring should be routed through the wall cavity, outlets and switches should be recessed. Bathroom floor should be stabilized, toilet replaced with a 250 gallon holding tank, exhaust fan installed and a hand sink installed. A new water line will need to be brought to the building (see mechanical). The bathroom should be finished with water resistant and easily maintained finish material. The stairs should be refinished and a color contrast/ slip resistant nosing added to the tread.

Operations of the Control house should be analyzed, a space plan performed and workstations designed to accommodate the activities.

Machine Room

Moderate renovation of the machinery house is recommended. Strip and paint the roof trusses and the underside of the structure. Replace the windows with full height insulated, operable windows that are

laminated to 4 feet above finished floor. Replace the door with an insulated stainless steel door. A code compliant means of access from the roadway to the machinery house should be provided. Strip and paint exterior of machinery house. All exterior finishes should be of the highest corrosion resistance.

Storage Shed

The exterior cladding system and roof system should be removed to the framing. All unused penetrations should be sealed. Replace with new exterior cladding system and roof system. All exterior finishes should be of the highest corrosion resistance. The roof system should be designed to drain properly with gutters and downspouts to drain to water way below.

Space planning for equipment layout should be performed. Blocking placed in walls as needed to hold equipment. Plywood should be mounted on walls as required for installation of wall hung equipment. Interior walls should be repaired and painted. Door openings should be cased and painted.

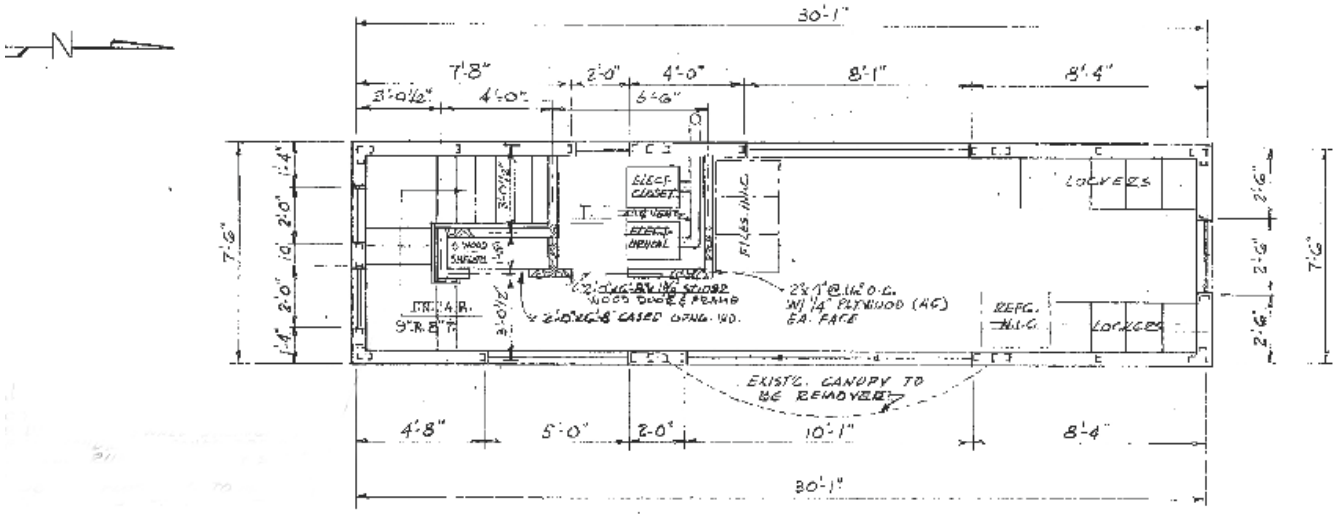

SECOND FLOOR PLAN
SCALE: ¼"=1'-0"

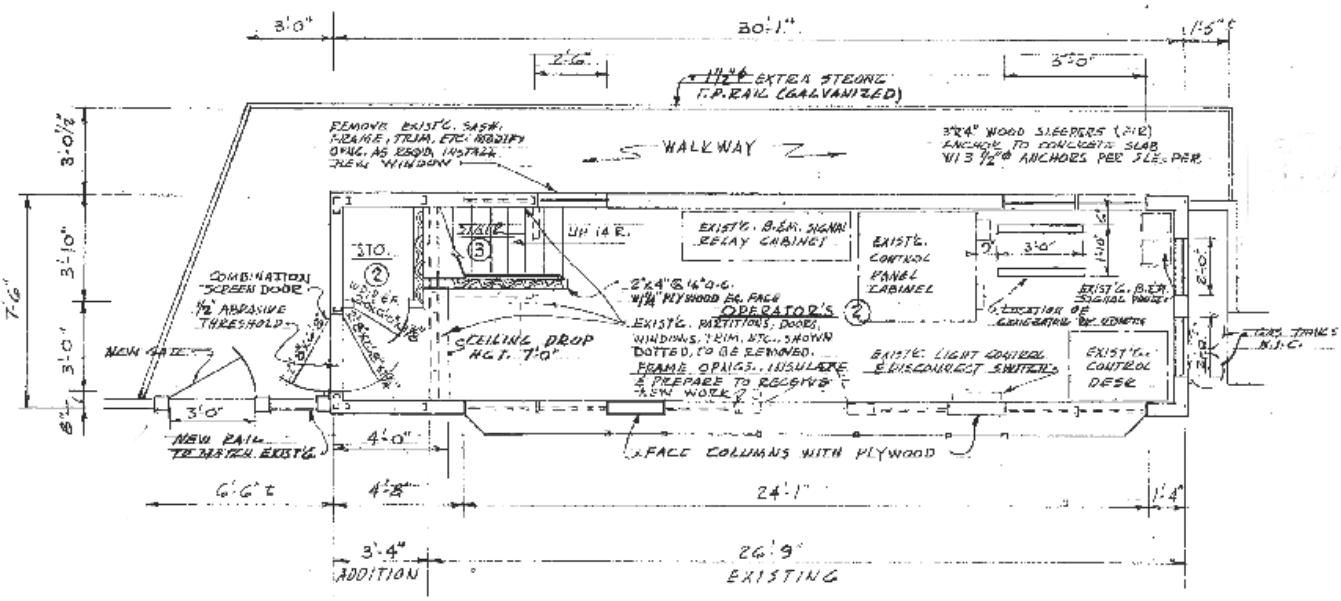

FIRST FLOOR PLAN
SCALE: ¼"=1'-0"

PLANS - Control House

PHOTO 1: Control House- North elevation

PHOTO 2: Control House- North elevation

PHOTO 3: Control House Roof

PHOTO 4: Control House Exterior Door

PHOTO 5: Deterioration at Control House Door

PHOTO 6: Control House Walkway

PHOTO 7: Penetration in Control House Exterior

PHOTO 8: Control House Exterior- North Elevation

PHOTO 9: Control House Exterior- North Elevation

PHOTO 10: Control House Exterior- Walkway at West

PHOTO 11: Control House Exterior- Walkway at West

PHOTO 12: Control House Interior

PHOTO 13: Control House interior

PHOTO 14: Control House Interior

PHOTO 15: Control House Interior

PHOTO 16: Control House Interior

PHOTO 17: Control House Interior

PHOTO 18: Control House Interior

PHOTO 19: Control House Interior

PHOTO 20: Control House Interior

PHOTO 21: Control House Interior

PHOTO 22: Control House Interior

PHOTO 23: Machinery House

PHOTO 24: Machinery House Interior

PHOTO 25: Machinery House Interior - Window

PHOTO 26: Machinery House Interior – Floor

PHOTO 27: Machinery House Interior – Roof Trusses

PHOTO 28: Machinery House Interior

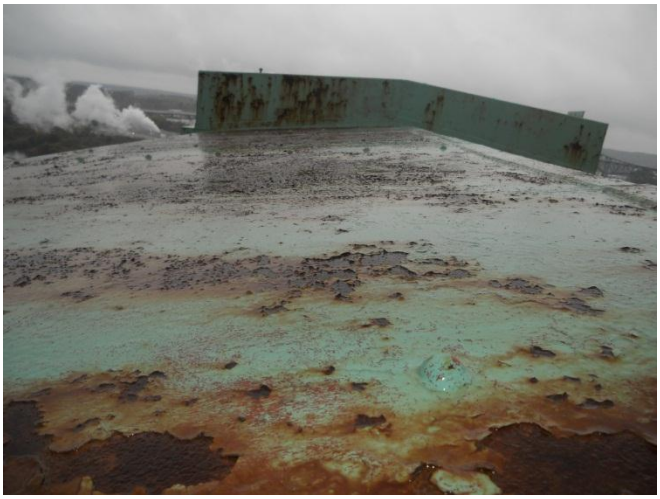

PHOTO 29: Machinery House Exterior

PHOTO 30: Machinery House Interior

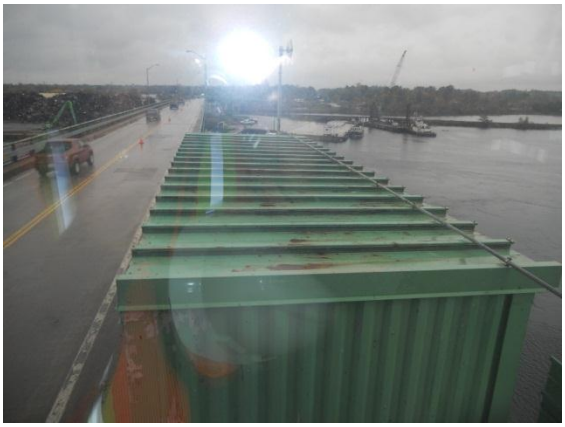

PHOTO 31: Storage Shed Exterior

PHOTO 32: Storage Shed Exterior

PHOTO 33: Storage Shed Exterior

PHOTO 34: Storage Shed Exterior

PHOTO 35: Storage Shed Exterior

PHOTO 36: Storage Shed Exterior

PHOTO 27: Storage Shed Exterior

PHOTO 38: Storage Shed Exterior

PHOTO 39: Storage Shed Interior

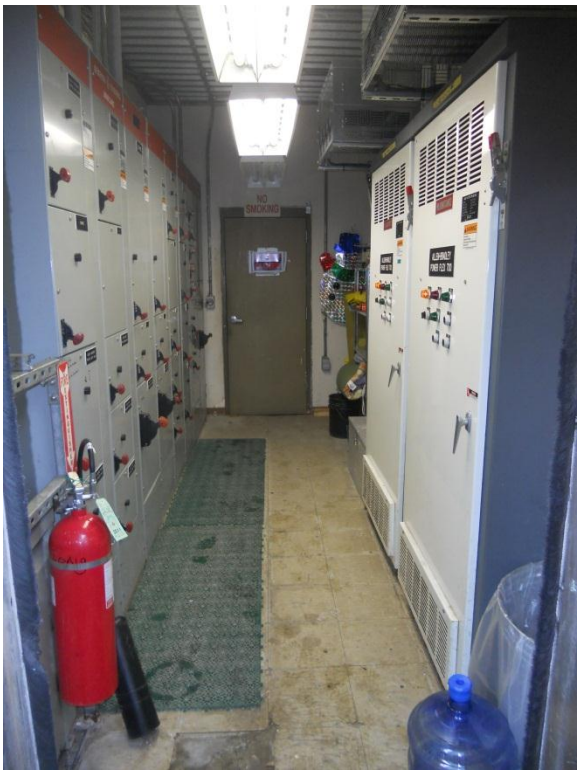

PHOTO 40: Storage Shed Interior

RAILROAD INSPECTION

Background Information

The railroad bridge features two separate movable spans. The first movable span is the vertical lift span which opens to serve the navigational channel for passage of large vessels.

The secondary movable span is only apparent to water and rail traffic. On the north side of the lift bridge, the first non-truss railroad span lifts up and moves south as a retractable bridge, coming to rest atop of the rails on the first span inside the truss.

This secondary span creates a waterway large enough for most recreational boats to pass through without the need for interruption of automobile traffic on the upper deck.

The current railroad operations across the Sarah Mildred Long Bridge on this line are limited to two - three round trips per year to remove waste materials from the Portsmouth Naval Shipyard. The new railroad track and related components shall be designed for a minimum service life of 50 years.

HNTB performed an inspection of the track structure across the Sarah Mildred Long Bridge on November 1-2, 2011. The inspection was performed in order to document and evaluate the existing track conditions from the Portsmouth, NH approach, across the bridge over the Piscataqua River, and along the Kittery, ME approach. The current ballast track approaches and open deck bridge structure alignment were constructed in the late 1930's and opened to rail traffic in 1940. In 1965 girder span 21 was modified to a retractable span to accommodate openings for small crafts.

The track inspection included the existing running rails, guard rails, bridge timbers, timber and rail fastening systems, lift joints, expansion joints, and wood ties and ballast track on bridge approach sections.

EXISTING CONDITIONS ASSESSMENT

The single track between the Portsmouth and Kittery approaches consists of two types of track construction, including the following:

- Wood ties in ballast track on bridge approaches outside of the open deck structure abutments

- Open deck timber track on steel stringers and floor beams between the abutments across the girder and truss spans.

Ballast Track in Approach Areas

The track structure in the ballast approach sections consists of 112 RE jointed running rails on 8'-6"x 8" x 6"wood ties with double shoulder plates, and cut spike fasteners. The double emergency guard rail on the bridge extends beyond the abutments into the ballast approaches approximately 30'. The guard rails are fastened directly to the ties with cut spikes, inside of and parallel to the running rails.

The majority of the approach ties, according to date nails found in ties, are approximately 70 years old, are in poor shape and have outlived their life expectancy.

Ballast on the approaches is generally sparse, fouled and in poor condition.

Open Deck Track

Track on the open deck girder, truss and lift spans of the bridge consists of 112 RE jointed running rail and double shoulder plates on varying dimensioned timber ties. The running rail and plates are fastened to the bridge timbers with cut spikes. The 85 AS emergency guard rail is fastened to the timbers directly with cut spikes. The timbers across the entire structure are spaced and fastened together with dapped 4"x 8" continuous wood spacer planks which are fastened with screw spikes on both sides of every third timber on the top outside of the timbers.

The timber ties on the tangent section of the bridge are dapped over steel stringers and rest flat on floor beams. These timbers are only fastened to the stringers, with U-bolts, in areas with safety platforms. There are no existing spacer blocks between the timbers on the tangent section.

The timber ties on the curved rail sections of the bridge are dapped over wooden sleepers which are fastened to the steel stringers with ¾" bolts. The sleepers are beveled from side to side and are designed to provide superelevation in the curves. There is currently approximately 3 ½" of full elevation

in the main body of the curves. The existing superelevation equates to a design speed of 35 MPH and is excessive for today's actual speed of less than 10 MPH today, due to railroad security gate access.

The bridge timbers are fastened to the sleepers with drive spikes. There are limited and sporadic spacer blocks in curved track areas which sit on the sleepers and are fastened directly to the timbers in an attempt to prevent timbers from skewing and moving horizontally along the stringers.

Bridge Timbers

Overall the timber condition was in fair to poor condition. The majority of the current timber deck appears to have been installed during the 1939 bridge construction and the timbers are long past the end of their life expectancy. Many timbers have checked and split due to exposure to the elements and some have deteriorated due to plate cutting and weakening of fasteners. Adjacent timbers and track components are showing wear because they are now bearing the load of the failing timbers.

Other timbers, particularly those on the girder spans appear to have been replaced at some point since the original bridge construction and are in better condition than those on the truss spans. The retractable span timbers are believed to have been replaced during the 1965 re-construction. The retractable span timbers appeared to be in fair condition, but were inaccessible during the inspection period due to the span being in the open position.

Running Rail

The 112 RE jointed rail across the bridge and approaches was installed in 1939 -1940 and has therefore been in service for approximately 70 years. There was limited head and gauge wear measured at numerous points along the rail. This was surprising for rail in service for such a long period of time, however this was attributed to the very limited amount of train traffic across the bridge. There was one broken rail (Dutchman) found on the structure.

This occurred along the west running rail at the south end of the northerly lift joint located on the main lift span. There were no other major rail defects noted during the walking inspection, however the following rail conditions caused by age, weather, and proximity to waterway were identified:

- Corrosion and pitting of rail, joints, plates and otm across entire structure, particularly in the more enclosed tower areas.

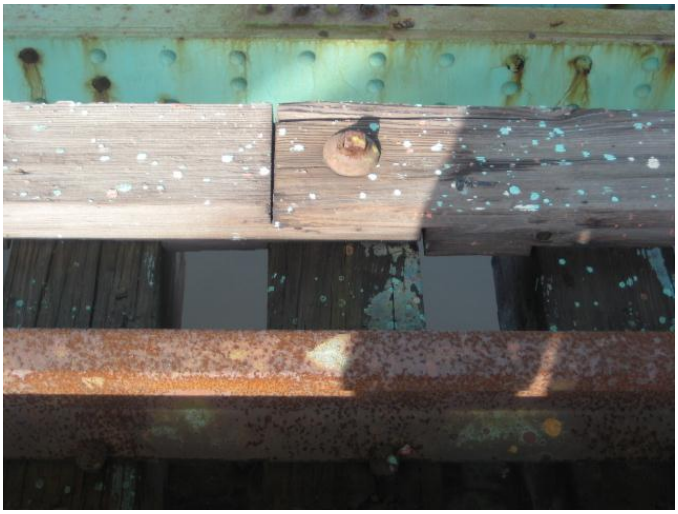

Note thread loss on drive spike removed from spacer plank.

Rail fastening systems, and tie plates

The existing rail fastening system consists of 5 ½" base double shoulder canted tie plates, tie pads and standard railroad cut spikes. The tie plates and cut spikes showed signs of pitting and corrosion similar to the running rail. Due to deterioration and plate cutting it was hard to determine whether tie pads had been installed. The visible tie pads were in poor condition.

Guard Rails

Bridge emergency guard rails consisted of 85 AS jointed rails manufactured in 1921. They are fastened directly to the bridge timbers with cut spikes. The guard rails are typically inside of the running rails across the bridge with the exception of the main lift span where the guard rails are outside of the running rails.

The guard rails and cut spikes showed signs of pitting and corrosion similar to the running rail.

Gauge

Generally the statically measured gauge of the track across the bridge ran between 56 1/4" to 56 ¾'. Some small sections of track were observed during the inspection where missing or loose cut spikes, tie plates and deteriorated timbers occurred. These are indications that the track structure may be weak and gauge could spread under train loads.

Alignment

The horizontal alignment across the bridge is typically tangent with (2) six degree curves occurring in the vicinity of the first 2 girder spans on the south end and the last 3 girder spans on the north end, including the retractable span.

These curves continue off the structure into the ballast track approaches. Overall, the alignment was generally in good condition with minor varying deviations throughout which will be further explored and removed during the design process.

Track surface

Generally the track surface across the bridge was in good to fair condition. Some profile deviations were noticeable, particularly in the bridge to ballast track transition areas at both the Portsmouth and Kittery abutments, where the approaches are lower than the bridge profile. The overall profile will be explored and deviations will be removed during the design process.

Expansion Joints

There are three pairs of expansion joints located along the open deck structure between the Portsmouth and Kittery abutments which appear to have been installed in 1939, and one pair located in the ballast track on the Kittery approach which appear to have been installed in 1965. They are positioned to allow for rail movement across the bridge during the rail expansion process. They are located as follows; one pair on the truss span immediately south of the lift span, one pair on the lift span, one pair on the truss span immediately north of the lift span, and one pair in the ballast track approximately 35' off the north abutment. All expansion joints are 45 -70 years old and appear to be working as designed, and did not show signs of measurable expansion. The expansion joints and fastenings show signs of pitting and corrosion similar to the running rail.

Lift Joints

There are two pairs of lift joints located on the main lift span which appear to have been installed in 1939, and two pairs located on the retractable span which appear to have been installed in 1965. They are positioned to allow for vertical lifting of the main lift and retractable bridge segments during bridge openings. All lift joints are 45 -70 years old and appear to be working as designed. The lift joints and fastenings show signs of pitting and corrosion similar to the running rail.

Walkway and safety platforms

There is one common walkway across the entire structure which is supplemented by small safety platforms located at various intervals along each side of the bridge. The safety platforms are outside of the train clearance envelope and allow railroad personnel a place to stand safely in the event of a passing train. The walkway consists of three 3”x 8” planks nailed to the bridge timbers along the centerline of track between the emergency guard rails. There are also timber walkway decks within the tower areas where the emergency guard rails transition from inside gauge to outside gauge allowing personnel to cross from center walkway to outside walkway at each tower and back to center walkway across the main lift span. The timber walkways are generally in fair to poor condition with some loose or missing planks noted during the inspection.

The timber walkway decks within the towers are in poor condition with many deteriorated, loose and some missing planks.

The safety platforms are typically 4’ wide and extend 3’-6” beyond the average timber lengths. They consist of 3” x 10” planks fastened to and supported by two extended bridge timbers, which are fastened to the stringers with u-bolts on each end. The platforms typically have one handrail affixed to the outside face.

The safety platforms are generally in poor condition. Some have been removed and not replaced while others are missing decking and/or handrails.

Turnouts

There were no turnouts within the track inspection limits.

Rail Lubricators

There were no rail lubricators visible within the track inspection limits.

RECOMMENDATIONS:

Upon completion of inspections and review of data and photographs, it is recommended that the entire track structure across the bridge and on the approaches be replaced within the next 3-5 years, using components listed below:

- Investigate rail expansion parameters and costs of two possible rail installation options over bridge and approaches: 1) Install new 115 RE CWR running rail. 2) Install new 115 RE jointed running rail.
- Install new 115 RE expansion joints. HNTB to investigate the potential for reducing the quantity of existing expansion joints.
- Install new 115 RE lift joints on lift and retractable spans.
- Install new 5 ½" base resilient plates, screw spikes, clips and fasteners.
- Install all new treated bridge timbers.
- Investigate the potential for removal of, or height reduction of timber sleepers on stringers by eliminating excessive super elevation in curved areas.
- Install new treated spacer blocks fastened between each end of all timbers.
- Install ¾" variable length hook bolts on both ends of every fourth timber.
- Install new 5/8"x 3"continous steel spacer bars.
- Re-install existing 112 RE running rail as guard rail.
- Install transition timbers on bridge approaches in ballast track adjacent to abutments.
- Install new ballasted track on approaches.

Appendix A

HNTB CORPORATION
PHASED ARRAY
JOB # 1211-040

PERFORMED BY:

BAKER TESTING SERVICES, INC.

Inspection Procedure

Phase Array Ultrasonic Inspection
OF BRIDGE PINS
BTS-PAUTBP

Revisions Log

Revision No.	Date	Record of Revisions
0	9/1/11	New Procedure

UNCONTROLLED COPY
NOT SUBJECT TO REVISION CONTROL

APPROVED BY:

Pres.	Director of Q.A./Q.C.
V. Pres.	Responsible Level III

1.0 Scope and General Requirements.

This procedure is a general guide for the ultrasonic examination of bridge pins. In the absence of a specification and acceptance standard this procedure shall be used for the mapping of indications present in a pin and not for determination of acceptance.

2.0 Reference Documents

2.1 SNT-TC-1A Recommended Practice for personnel Qualification and Certification of Nondestructive Testing Personnel.
2.2 CP-189 ASNT Standard for Qualification and Certification of Nondestructive Testing Personnel.
2.3 ASME Code Section V.
2.4 ASTM A388 Practice for Ultrasonic Examination of Heavy Steel Forgings

UNCONTROLLED COPY
NOT SUBJECT TO REVISION CONTROL

3.0 Equipment

3.1 Examination shall be conducted with an Olympus Omniscan MX Ultrasonic System or equivalent capable of generating frequencies over the range of 1 MHZ to 10 MHZ unless otherwise specified.

3.2 When specifically required, the electronic apparatus shall contain a Calibrated Attenuator, accurate over it's range to ± 20 percent or ± 2 db which will allow comparison of indications beyond the viewable portion of the screen presentation of the instrument.

3.3 The Ultrasonic instrument shall provide Linear Vertical Presentation within ± 5 percent of full screen height for 20% to 80% of the calibrated screen height.

3.4 The proper functioning of the examination equipment shall be checked and the equipment shall be calibrated by the use of the calibration standard. This calibration shall be saved in the instrument for recall during inspection. If during any check it is determined that the testing equipment is not functioning properly, all of the product that has been tested since that last valid equipment calibration shall be re-examined.

3.5 Search units with contoured contact wedges may be used to aid ultrasonic coupling. Calibration shall be done with the contact wedges used during the examination.

3.6 The following materials will act as a suitable couplant, Sonotrace, Ultragel, Sonotech UT-X, or motor oil.

3.7 Post examination cleaning will be performed when specified in the customers written requirements.

3.8 Transducers shall produce a longitudinal wave to include a zero degree beam. This longitudinal wave shall also be refracted to a higher angle based on the pin configuration.

4.0 Qualification of Personnel.

4.1 All personnel performing examinations specified herein shall be certified Ultrasonic Level II or Level III in accordance with SNT-TC-1A and Baker Testing Services, Inc. Quality Control Manual. When required by contract personnel shall also hold a current NY DOT UT Certification.

5.0 Examination Standardization.

5.1 The scanning surface shall be prepared for examination so that it is free of paint, scale and rust. The surface shall be reasonably flat to allow sound transmission into the pin.

5.2 Recording of indications shall be made with respect to the reference level.

5.3 Whenever possible each pin shall be tested from both the inboard end and the outboard end.

5.4 Each scan will complete one full revolution about the pin centerline covering 360 degrees of rotation. The inboard scan will be encoded in a clockwise direction and the outboard end will be encoded in a counterclockwise direction.

5.5 Each scan shall start at top dead center of the pin. This location will be referenced as 12:00. Indications will be referenced using clock positions as viewed from the inboard end. Inversing the encoder will ensure indications seen from both ends plot correctly.

5.6 Each scan shall use an encoder to record the position of indications noted.

5.7 Each scan shall be stored within the unit as a data file to be analyzed in detail.

5.8 The rate of the manual encoded scan shall not produce greater than 5% drop out of data nor two adjacent data lines dropped.

6.0 Calibration Standards.

6.1 Calibration pins shall be of an acoustically similar material and shall have a surface finish which will be representative of the examination surface.

6.2 The calibration standard shall have at least two reflector notches prepared to suit the diameter and the configuration of the pins to be examined. Ideally these notches should be placed within the shear plane area of the pin. It would also be an acceptable practice to use a correctly placed single saw cut viewed from each end at the correct sound path distances.

6.3 The engineer of record for each job shall approve the calibration pins dimensions as they relate to the pins under examination for each bridge.

7.0 Calibration Procedure:

7.1 Calibrate the encoder.

7.1.1 Affix the encoder to the probe holder so that the wheel will rotate parallel to the scan progression. Configure the probe holder so that it is free to rotate about the pin centerline.

7.1.2 Using a level position the probe at top dead center.

7.1.3 Select Wizard / Calibration / Encoder. Set the Origin at 0 and set the Distance at 12.

7.1.4 Move the probe clockwise one full revolution stopping at top dead center.

7.1.5 Select Calibrate and Accept.

7.1.6 Verify the encoder is correctly calibrated by re-setting the scan start and complete one full revolution scan. The encoder end position shall be within 1% of the scanned length (a value of 11.880 to 12.120).

7.1.7 Any change in position of the probe, encoder or center point will require a re calibration of the encoder.

7.2 Calibrate the unit - Each focal law group setting will require calibration.

7.2.1 Perform a Velocity calibration.

7.2.1.1 Using any suitable carbon steel known thickness standard develop two depth points. Multiple echo's from an IIW block or from a fabricated pin calibration standard would be ideal calibration standards.

7.2.1.2 Select Wizard / Calibration / Type Ultrasound / Mode Velocity / Start.

7.2.1.3 Enter Angle Zero / Next.

7.2.1.4 Echo Type Depth.

7.2.1.5 Enter Depth 1 and Depth 2 / Next.

7.2.1.6 Gate on indication at Depth 1 and Select Get Position.

7.2.1.7 Gate on indication at Depth 2 and Select Get Position.

7.2.1.8 Select Accept. The V should change to green to indicate that the velocity is correctly calibrated.

7.2.2 Perform a Wedge Delay calibration. Note even contact transducers need wedge delay calibration performed.

7.2.2.1 The .060" SDH in an IIW block would be an ideal calibration standard.

7.2.2.2 Select Wizard / Calibration / Type Ultrasound / Mode Wedge Delay / Start

7.2.2.3 Chose Depth as echo type / Next / gate on the signal from the hole / Next.

7.2.2.4 Move the probe over the hole to build an envelope. Chose calibrate. Again move the probe over the hole to see that the envelope is within the tolerance window. If not correct select Clear Envelope / Restart and repeat the process. When the calibration is satisfactory chose Accept. The W should change from red to green to indicate the probe delay is correctly calibrated.

7.2.3 Perform a Sensitivity calibration. Note this calibration only normalizes each of the focal laws within group.

7.2.3.1 The .060" SDH in an IIW block would be an ideal calibration standard.

7.2.3.2 Select Wizard / Calibration / Type Ultrasound / Mode Sensitivity / Start.

7.2.3.3 Select Next / Next / gate on signal from the hole / Next.

7.2.3.4 Move the probe over the hole to build an envelope. Ensure that the highest amplitude detected is located between the two reference lines. If not adjust using the gain value. Chose calibrate. Again move the probe over the hole to see that the envelope is within the tolerance window. If not correct select Clear Envelope / Restart and repeat the process. When the calibration is satisfactory chose Accept. The S should change from red to green to indicate the sensitivity is correctly calibrated.

7.2.4 Sensitivity calibration / TCG calibration. Note this calibration sets the overall sensitivity of the inspection.

7.2.4.1 The ideal calibration reflector for this calibration would be an induced flaw (sawcut) in a fabricated pin closely matching the actual pins to be tested. Other configurations of calibration standards may be used when agreed upon. The depth of the sawcut shall be agreeded upon prior to testing.

7.2.4.2 Select Gate Alarm / Sizing Curves / TCG / Edit.

7.2.4.3 Point one is set by default.

7.2.4.4 Peak signal from 1st sawcut and manually adjust the gain to obtain 80% FSH enter it's (depth) and Select Add (point2).

7.2.4.5 Peak signal from 2nd sawcut and manually adjust the gain to obtain 80% FSH enter it's (depth) position and Select Add (point 3).

7.2.4.6 Repeat as required for each calibration point.

7.2.4.7 Select Mode / Setup to exit the calibration screen.

7.2.4.8 Save this calibration for recall.

8.0 Examination Procedure.

8.1 Both end surfaces of the pins shall be free of any roughness that would interfere with free movement of the search unit or impair the transmission of ultrasonic vibrations.

8.2 A suitable couplant will be placed on the end of the pin.

8.3 Scanning may be performed at 6db over Reference Level.

8.4 The transducer shall be placed on the end of the pin at top dead center 12:00 position and scanned one full revolution. The operator should note the indications produced by the geometry of pin (ie. shoulder, treads, center punches, etc.) Any indications other than geometry shall be noted and evaluated further.

8.5 The pins shall be examined for indications that are circumferentially oriented to the axis of the pins. The critical areas are the shear plane sections and threaded ends if present.

8.6 The probe shall be moved to the other end of the pin and inspection above repeated. Note: If the pin is fabricated the same on both ends, the indications from the geometry of the pin should be the same when inspecting both sides. There shall still be a strong signal at and about the zero degree wave from the opposite end of the pin.

9.0 Evaluation & Reporting of Indications.

9.1 Indications shall be reported at the reference sensitivity level.

9.2 All indications with amplitudes greater than 20% of reference shall be reported. Indications less than 20% may be reported for the purpose of information.

9.3 Indications shall be reported to include the following information:

9.3.1 Signal amplitude of the indication expressed as % of reference.
9.3.2 Location of the indication. (Distance from the end of the pin.)

9.3.3 Circumferential orientation of the indication. (Start and end of the indication expressed in clock position as viewed from end being tested.)

10.0 Reporting.

10.1 Detailed reports showing defect tables may be generated and output using Olympus Tomoview software.

10.2 Detailed calibration sheets shall be produced using Olympus Tomoview software.

11.0 Evaluation of Test Data

11.1 The evaluation of the test data resulting from this examination shall be performed by others.

Scan Plan

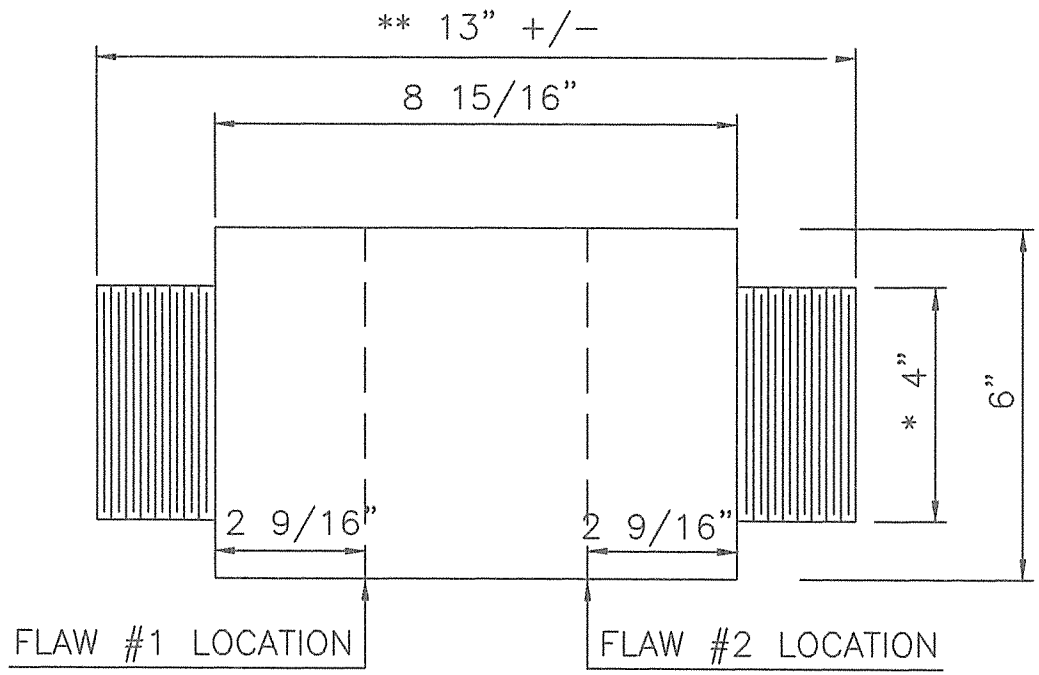

FLAW #1 – 1/8" DEEP X 1/2" – 3/4" NOTCH (SAWCUT)
FLAW #2 – 1/4" DEEP X 3/4" – 1" NOTCH (SAWCUT)

* THREADED END FIELD MEASURED AT 3.985" WITH DIAL CALIPERS.

** LENGTH OF PIN NOT GIVEN ON RECORD PLANS. LENGTH OBTAINED IN FIELD COULD NOT BE DIRECTLY MEASURED THEREFORE, DIMENSION SHOWN MAY VARY SLIGHTLY FROM ACTUAL LENGTH.

SARAH MILDRED LONG BRIDGE
LIFT SPAN HANGER PINS

DETAILS OF TEST PIN FOR UT EXAMINATION

Phased Array Technique

eference Material

ject No.	Technique	Part	Weld
ed Long Bridge	Phased Array	Lift Span Hanger Pins	

on Unit

Manufacturer	Model	Serial Number	PA Channels	Law Channels
ympus	Omniscan MX	OMNI-1258	128	32

n Block

n Block	Material	Target
abricated	CS	1/8" deep saw cuts

Instructions:
; to 80% FSH using DAC.

Coverage

50" off
terpoint.

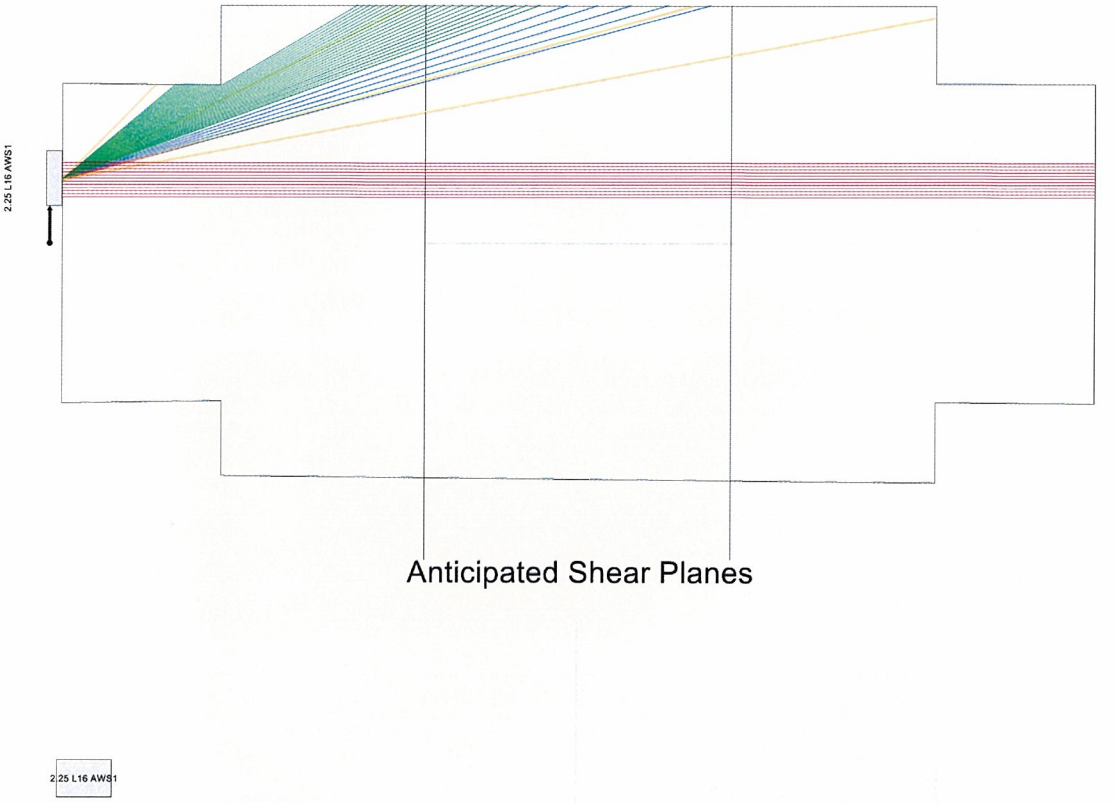

Piece

Material	Thickness	Shear Velocity	Compression Velocity
Steel 1020	12"	0.13IN/µs	0.23IN/µs

HAZ: 25% **HAZ Width:** 0.2"

Phased Array Probe: 2.25 L16 AWS1

Index Offset: -6.5" **Scan Offset:** 0" **Mirrored:** False

Transducer: 2L16-AWS1

Num. of Elements	Element Pitch	Total Aperture
16	0.04"	0.63"

Sectorial Beamset

Law Config.: Sectorial **Wave Type:** Longitudinal

Element Qty	First Element	Min. Angle	Max Angle	Angle Steps
16	1	15°	22°	1°

Focusing: None
Gate: OFF

Sectorial Beamset

Law Config.: Sectorial **Wave Type:** Longitudinal

Element Qty	First Element	Min. Angle	Max Angle	Angle Steps
16	1	20°	40°	0.5°

Focusing: None
Gate: OFF

Linear Beamset

Law Config.: Linear **Wave Type:** Longitudinal

Element Qty	First Element	Last Element	Num. of Beams	Refracted Angle
5	1	16	12	0°

Focusing: None
Gate: OFF

Scanner Details

Scanner Model	Serial Number
Custom Fabricated	

Scanner Properties:
Encoded 360 degree scan

Instructions

Scanning Instructions:
Record Criteria:
Report indications @ reference level. **Acceptance Criteria:**
Report indications amplitude, length, and location. Disregard indications less than 20%. **Special Instructions:**
Notes:
Green Beam Set to inspect near side threads. Blue Beam Set to inspect pin barrel. Red Beam set to record overall length and ensure adequate coupling has been maintained.

Document Date: 10/31/11

Instrument Calibration

OLYMPUS

OmniScan Report

Baker Testing Services, Inc. 22 Reservoir Park Drive Unit #1 Rockland, MA 20370 PH (781) 871-4458 FAX (781) 871-0123 WWW.BAKERTESTING.COM

Report Date	Report Version	Setup File Name	Inspection Date	Inspection Version	Save Mode
2011 / 12 / 22	MXU - 2.0R26	SML12611.ops	2011 / 12 / 22	MXU - 2.0R26	Report
OmniScan Type	**OmniScan Serial #**	**Module Type**	**Module Serial #**	**Calibration Due**	**Data File Name**
OmniScan MX	OMNI-1258	OMNI-M-PA16128	OMNI-2462	2012 / 09 / 19	Unnamed

		Technician	James Doyle
		Part Number	

Group 1

Probe Characterization

Probe Model	Probe Serial #				
2.25L16-AWS1	J0346				
Probe Frequency	**Peak Frequency**	**Wedge Model**	**Wedge Angle**	**Probe Aperture**	
2.25 MHz	N/A	Contact	0.0°	0.630 in	
	Lower Frequency	**Higher Frequency**	**Center Frequency**	**Bandwidth (MHz)**	**Bandwidth (%)**
-6 dB	N/A	N/A	N/A	N/A	N/A
-20 dB	N/A	N/A	N/A	N/A	N/A
Date	**Time**	**Procedure**	**Calibration Block**	**Characterization Gain**	**A%**
N/A	N/A	N/A	N/A	N/A	N/A

Setup

A:15.0 Sk:090 L:001

Beam Delay	Start (Half Path)	Range (Half Path)	Max. PRF	Type	Averaging Factor
1.394 us	1.863 in	9.917 in	75	PA	1
Scale Type	**Scale Factor**	**Video Filter**	**Pretrig.**	**Rectification**	**Band-Pass Filter**
Compression	27	On	0.00 µs	FW	2.25 MHz (1.1 - 3.4 MHz)
Voltage	**Gain**	**Mode**	**Wave Type**	**Sound Velocity**	**Pulse Width**
80 (High)	30.90 dB	PE (Pulse-Echo)	User-Defined	0.230 in./µs	220.00 ns
Scan Offset	**Index Offset**	**Skew**			
0.000 in	-1.800 in	90.0°			

Gate	Start	Width	Threshold	Synchro
I	14.155 in	0.357 in	22.00 %	Pulse
A	2.710 in	6.800 in	27.00 %	Pulse
B	14.155 in	0.357 in	31.00 %	Pulse

TCG Point Number	Position (Half-Path)	Gain
1	0.000 in	0.0 dB
2	4.600 in	3.0 dB
3	8.300 in	5.6 dB

Calculator

Used Element Qty.	First Element	Last Element	Resolution	Wave Type	Material Velocity
16	1	16	1.0	User-Defined	0.230 in./µs
Start Angle	**Stop Angle**	**Angle Resolution**	**Focal Depth**	**Law Configuration**	
15.0°	22.0°	1.0°	5.000 in	Sectorial	

Group 2

Probe Characterization

Probe Model	**Probe Serial #**				
2.25L16-AWS1	J0346				
Probe Frequency	**Peak Frequency**	**Wedge Model**	**Wedge Angle**	**Probe Aperture**	
2.25 MHz	N/A	Contact	0.0°	0.197 in	
	Lower Frequency	**Higher Frequency**	**Center Frequency**	**Bandwidth (MHz)**	**Bandwidth (%)**
-6 dB	N/A	N/A	N/A	N/A	N/A
-20 dB	N/A	N/A	N/A	N/A	N/A
Date	**Time**	**Procedure**	**Calibration Block**	**Characterization Gain**	**A%**
N/A	N/A	N/A	N/A	N/A	N/A

Setup

A:00.0 Sk:090 L:001					
Beam Delay	**Start (Half Path)**	**Range (Half Path)**	**Max. PRF**	**Type**	**Averaging Factor**
0.005 us	1.999 in	12.986 in	75	PA	1
Scale Type	**Scale Factor**	**Video Filter**	**Pretrig.**	**Rectification**	**Band-Pass Filter**
Compression	35	On	0.00 µs	FW	2.25 MHz (1.1 - 3.4 MHz)
Voltage	**Gain**	**Mode**	**Wave Type**	**Sound Velocity**	**Pulse Width**
80 (High)	24.90 dB	PE (Pulse-Echo)	Longitudinal	0.232 in./µs	220.00 ns
Scan Offset	**Index Offset**	**Skew**			
0.000 in	-0.350 in	90.0°			
Gate	**Start**	**Width**	**Threshold**	**Synchro**	
I	14.904 in	0.372 in	22.00 %	Pulse	
A	12.800 in	0.765 in	25.00 %	Pulse	
B	14.904 in	0.372 in	31.00 %	Pulse	

Calculator

Used Element Qty.	**First Element**	**Last Element**	**Resolution**	**Wave Type**	**Material Velocity**
5	1	16	1.0	Longitudinal	0.232 in./µs
Start Angle	**Stop Angle**	**Angle Resolution**	**Focal Depth**	**Law Configuration**	
0.0°	N/A	N/A	5.000 in	Linear	

Group 3

Probe Characterization

Probe Model	Probe Serial #				
2.25L16-AWS1	J0346				
Probe Frequency	**Peak Frequency**	**Wedge Model**	**Wedge Angle**	**Probe Aperture**	
2.25 MHz	N/A	Contact	0.0°	0.630 in	
	Lower Frequency	**Higher Frequency**	**Center Frequency**	**Bandwidth (MHz)**	**Bandwidth (%)**
-6 dB	N/A	N/A	N/A	N/A	N/A
-20 dB	N/A	N/A	N/A	N/A	N/A
Date	**Time**	**Procedure**	**Calibration Block**	**Characterization Gain**	**A%**
N/A	N/A	N/A	N/A	N/A	N/A

Setup

A:20.0 Sk:090 L:001

Beam Delay	Start (Half Path)	Range (Half Path)	Max. PRF	Type	Averaging Factor
1.054 us	0.769 in	1.836 in	75	PA	1
Scale Type	**Scale Factor**	**Video Filter**	**Pretrig.**	**Rectification**	**Band-Pass Filter**
Compression	5	On	0.00 µs	FW	2.25 MHz (1.1 - 3.4 MHz)
Voltage	**Gain**	**Mode**	**Wave Type**	**Sound Velocity**	**Pulse Width**
80 (High)	24.90 dB	PE (Pulse-Echo)	User-Defined	0.230 in./µs	220.00 ns
Scan Offset	**Index Offset**	**Skew**			
0.000 in	-1.125 in	90.0°			

Gate	Start	Width	Threshold	Synchro
I	13.282 in	0.334 in	22.00 %	Pulse
A	1.095 in	0.896 in	40.00 %	Pulse
B	13.282 in	0.334 in	31.00 %	Pulse

Calculator

Used Element Qty.	First Element	Last Element	Resolution	Wave Type	Material Velocity
16	1	16	1.0	User-Defined	0.230 in./µs
Start Angle	**Stop Angle**	**Angle Resolution**	**Focal Depth**	**Law Configuration**	
20.0°	40.0°	1.0°	1.700 in	Sectorial	

Part

Material	Geometry	Thickness
STEEL, MILD	Plate	13.000 in

Scan Area

Scan Start	Scan Length	Scan Resolution	Index Start	Index Length	Index Resolution
0.000 in	12.008 in	0.039 in	0.000 in	0.000 in	0.472 in
Synchro	**Max. Scan Speed**				
Encoder	2.953 in/s				

Axis	Encoder	Encoder Type	Encoder Resolution	Polarity
Scan	1	Quadrature	225.583 step/in	Normal
Index	Off	Off	Off	Off

Notes

2.25 L16
Contact
13 inch pin
Group 1
15-22 degree L wave covers pin barrel
Reference level set on 1/8" saw cut @ 4 and 8" depth using DAC
Group 2
0 degree L wave pin length and verify coupling
Group 3
20-40 degree L wave covers near threads
Reference level set on a single 1/8" saw cut @ 1.9" depth
Encoded to show one revolution of the probe as 12 clock locations.

Technician Name	James Doyle
Technician Signature	[signature]
Contractor	Baker Testing Services
Date	12/22/11

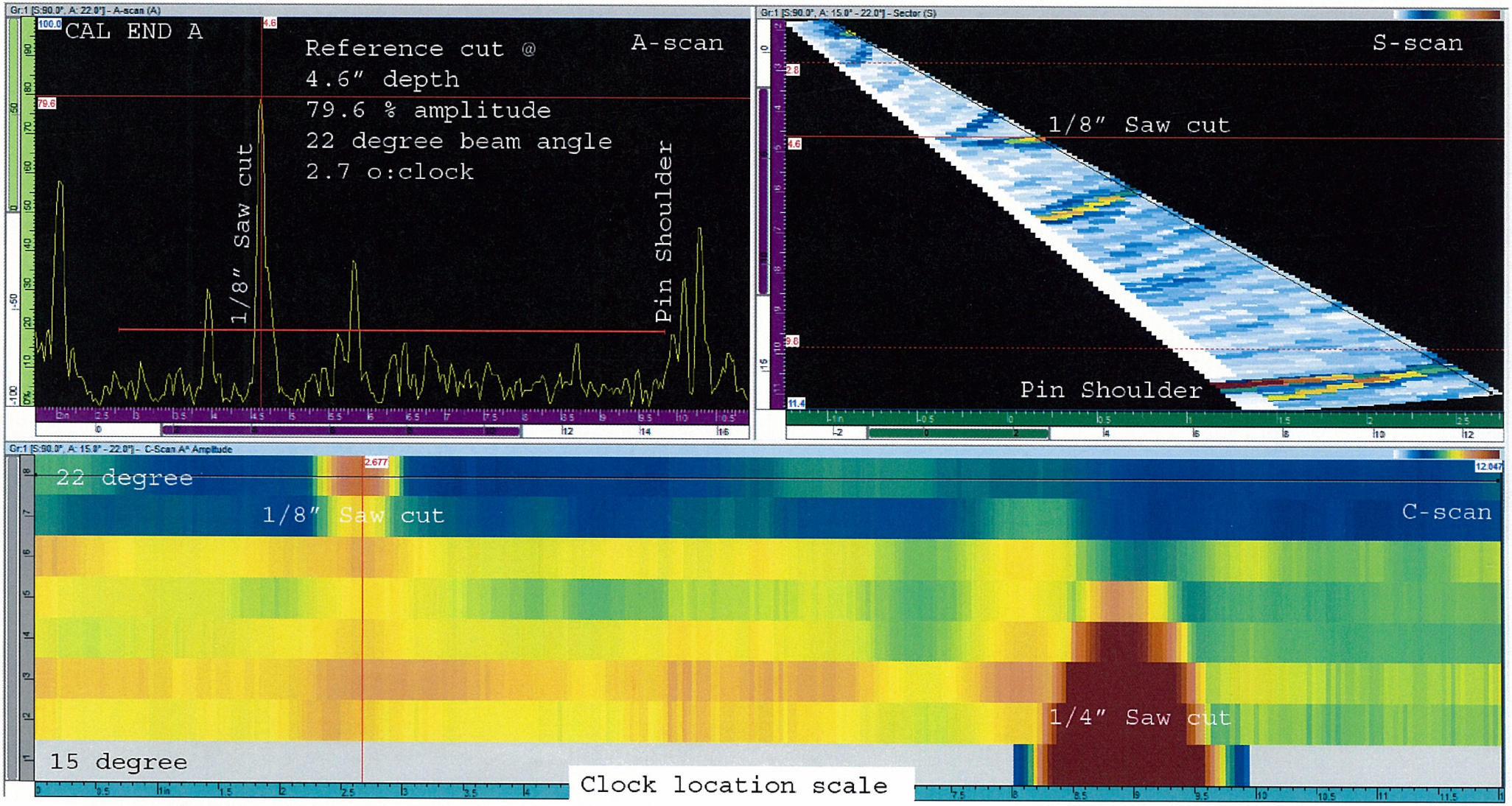
CAL END A
Reference cut @
4.6" depth
79.6 % amplitude
22 degree beam angle
2.7 o:clock
A-scan
1/8" Saw cut
Pin Shoulder
S-scan
1/8" Saw cut
Pin Shoulder
22 degree
1/8" Saw cut
C-scan
1/4" Saw cut
15 degree
Clock location scale

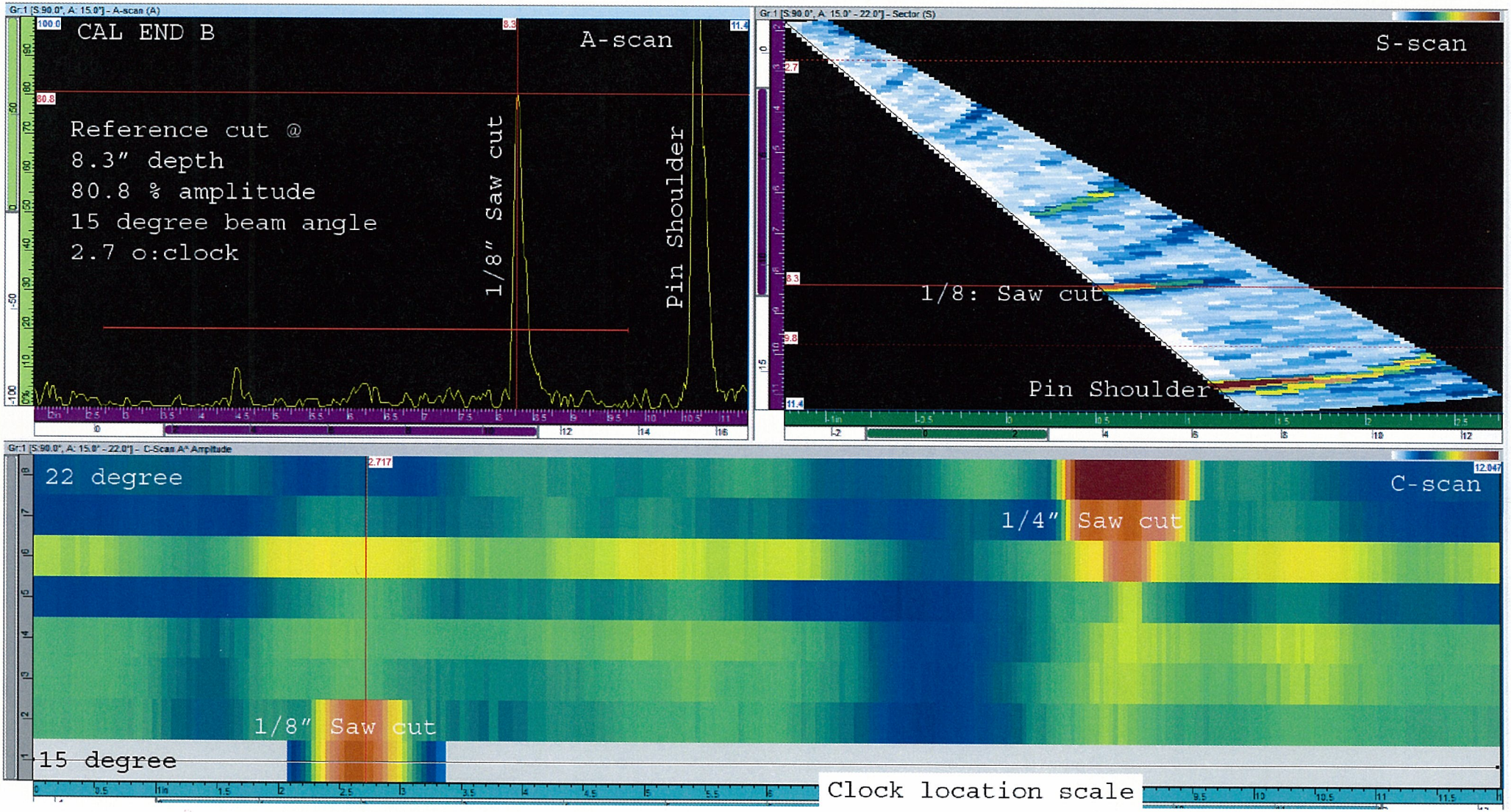
CAL END B
A-scan
Reference cut @
8.3" depth
80.8 % amplitude
15 degree beam angle
2.7 o:clock
1/8" Saw cut
Pin Shoulder
S-scan
1/8: Saw cut
Pin Shoulder
22 degree
C-scan
1/4" Saw cut
1/8" Saw cut
15 degree
Clock location scale

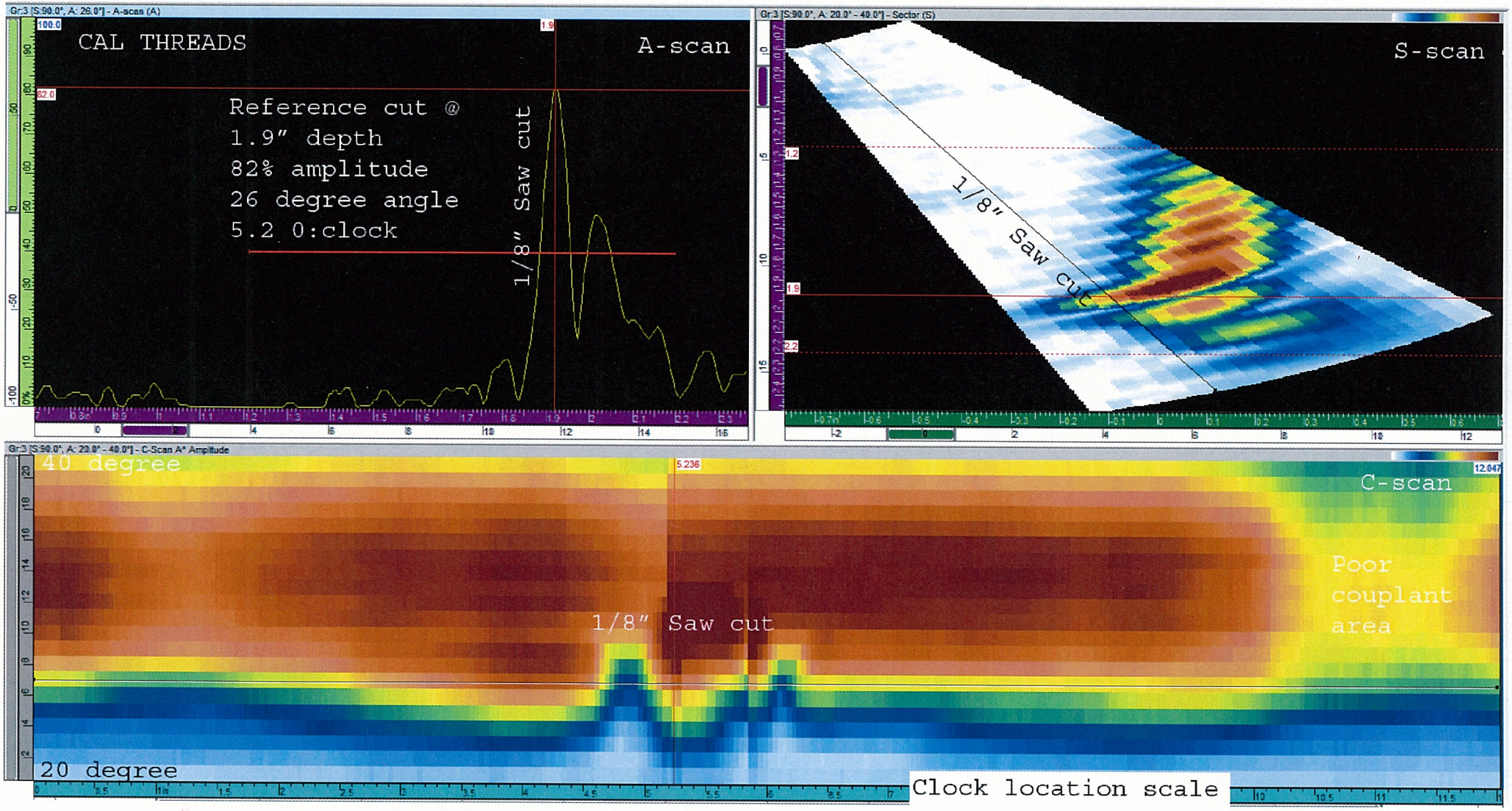
CAL THREADS
A-scan
Reference cut @
1.9" depth
82% amplitude
26 degree angle
5.2 0:clock
1/8" Saw cut
S-scan
1/8" Saw cut
40 degree
C-scan
Poor
couplant
area
1/8" Saw cut
20 degree
Clock location scale

Inspection Report

OFFICE / LABORATORY
22 Reservoir Park Drive Unit #1
Rockland, MA 02370

BAKER TESTING SERVICES, INC.

NONDESTRUCTIVE EXAMINATION
METALLURGY AND FAILURE ANALYSIS

(TEL) 781-871-4458
(FAX) 781-871-0123

NON-DESTRUCTIVE TEST REPORT

Customer:	HNTB Corporation	**Page** 1 **of** 25	**BTS Job No.:** 1211-040
Purchase Order No:		**Inspection Date:**	12/7/11 and 12/13/11
Inspection Method:	Ultrasonics	**Type:**	Phased Array
Job Location:	Portsmouth NH / Kittery ME	**Test Equipment:**	Olympus Omniscan
Part Identification:	Sarah Mildred Long Bridge	**Lighting Equipment:**	N/A
Part Name:	Lift Span Hanger Pins	**Quantity:**	8 pins
Part No.:	6" diameter x 13" long	**Material:**	Carbon Steel
Specification:	Customer Information	**Thickness:**	13"
Acceptance Std:	Customer Information	**Inspect Procedure:**	BTS-PAUTBP Rev. 0

Test Data:

See Omniscan calibration report. The basic calibration reflector was 1/8" saw cuts set to 80%.

The four corners of the lift span were labeled as North East, North West, South East, South West.
The two pins at each location labeled as Top and Bottom.
The two scans per pin were labeled as Inboard and Outboard.

Results:

See the following sheets for c-scan images and pin data sheets. Amplitudes less than 20% are not reported.
The c-scan images show one complete revolution of the probe, clock location is shown along the bottom scale.
Beam angle is shown on left scale 1 (being 15 degree) thru 8 (being 22 degree), exact values noted on data sheet.
Color coded amplitude scale is shown in upper right corner, exact values are noted on data sheet.

All of the pins showed wear groves typically found on the bottom (6:00 position) and somewhat lesser wear on the top (12:00) position. All of the indications showed a singular sharp "signal signature" that appears to be mechanically induced. This signature is quite different than a crack indication, with no indications of cracking noted. There are multiple plates wearing on these pins.

Three pins, NW BOT, SW TOP and SE BOT showed indications exceeding 80% amplitude (data shown in red).
These flaws exceed 1/8" thru wall but are likely to be less than 1/4" deep.

All of the threaded areas appeared to be free of any type of flaws.

All of the pins showed a good back wall response with measurements at 13.0 inch in length.
The NW TOP pin showed somewhat less amplitude from both scans. This may be a material difference within this pin only, perhaps a courser grain structure due to difference in heat treatment.

Due to the extent of wear noted it is recommended that these pins be reinspected at regular intervals.

INSPECTION TECHNICIAN:	LEVEL:	APPROVED SIGNATORY:	DATE:
James Doyle	III	QA/QC REPRESENTATIVE	12/22/2011

Reproduction of this report shall be in full only, pending our written approval.

OFFICE / LABORATORY
22 Reservoir Park Drive Unit #1
Rockland, MA 02370

BAKER TESTING SERVICES, INC.

NONDESTRUCTIVE EXAMINATION
METALLURGY AND FAILURE ANALYSIS

(TEL) 781-871-4458
(FAX) 781-871-0123

NON-DESTRUCTIVE TEST REPORT

Customer: HNTB Corporation **Job No.:** 1211-040 **Page:** 2 **of** 25

NE BOT IN

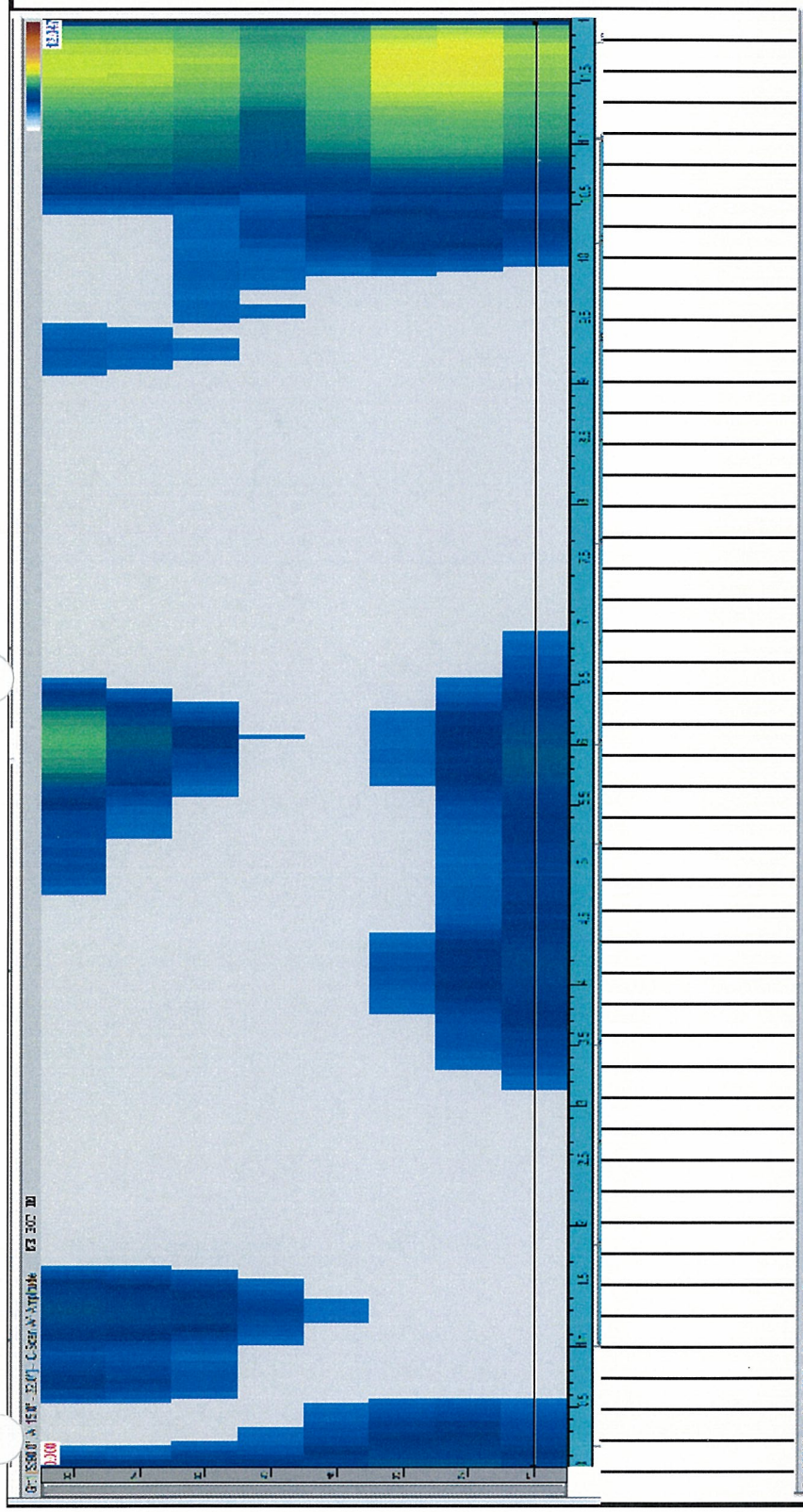

NE BOT OUT

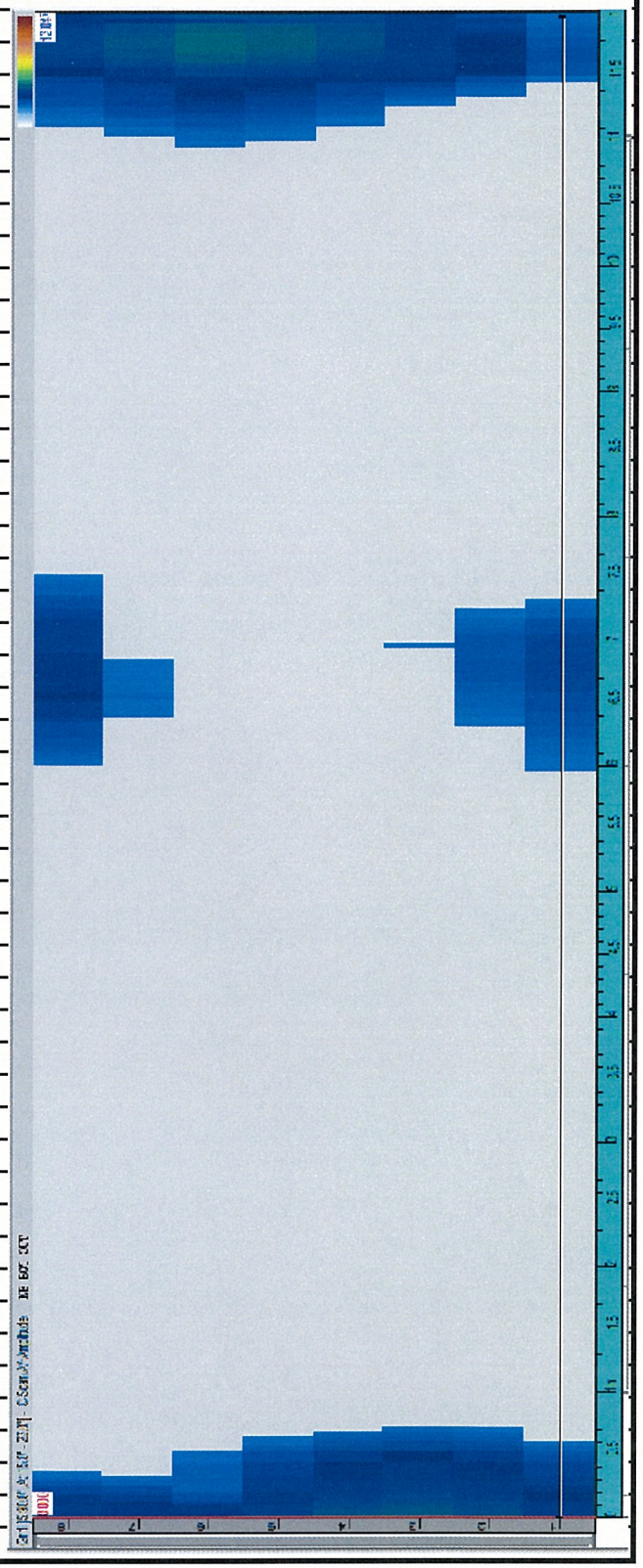

OFFICE / LABORATORY
22 Reservoir Park Drive Unit #1
Rockland, MA 02370

BAKER TESTING SERVICES, INC.

NONDESTRUCTIVE EXAMINATION
METALLURGY AND FAILURE ANALYSIS

(TEL) 781-871-4458
(FAX) 781-871-0123

NON-DESTRUCTIVE TEST REPORT

Customer: HNTB Corporation **Job No.:** 1211-040

NE TOP IN

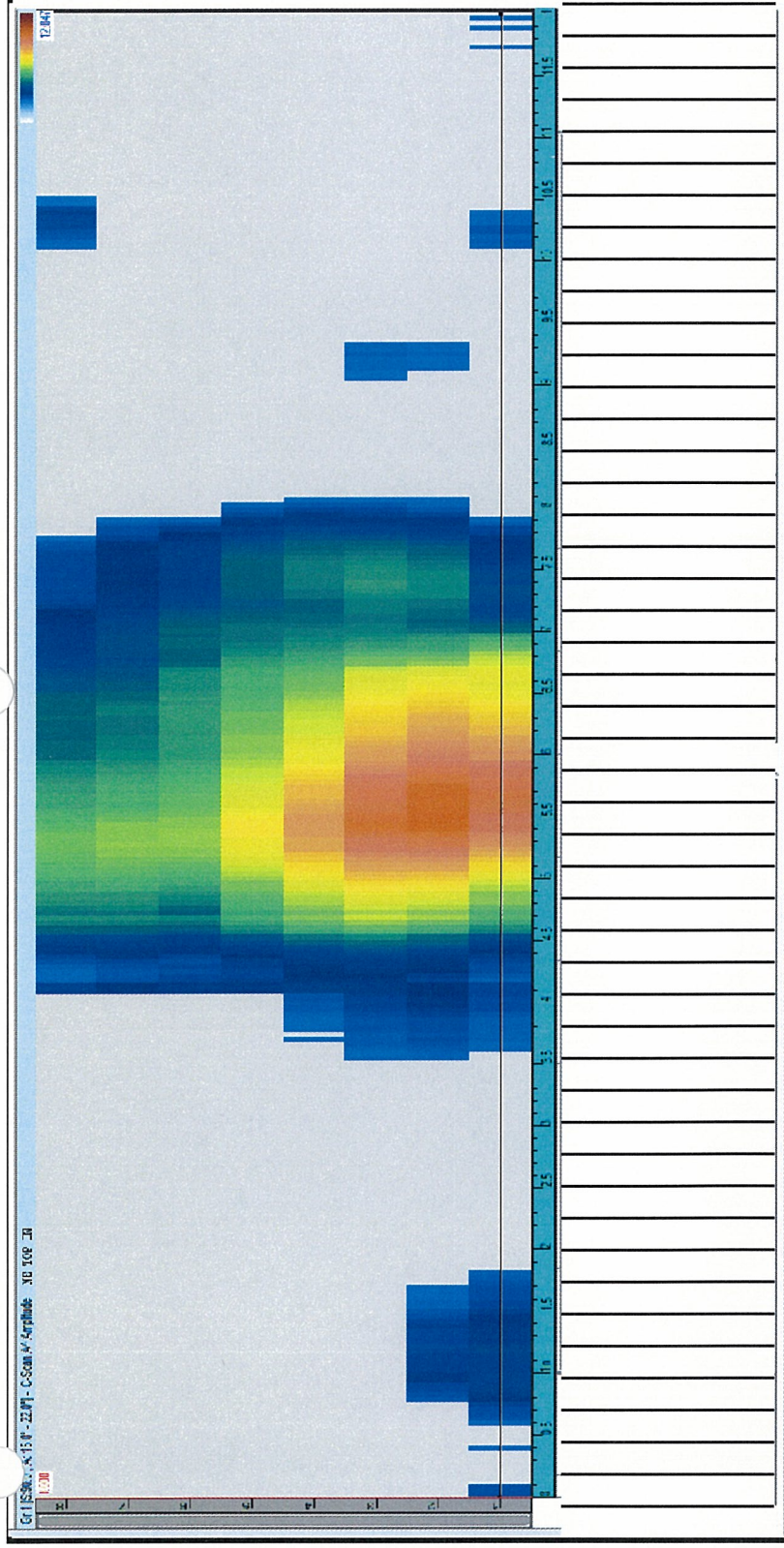

NE TOP OUT

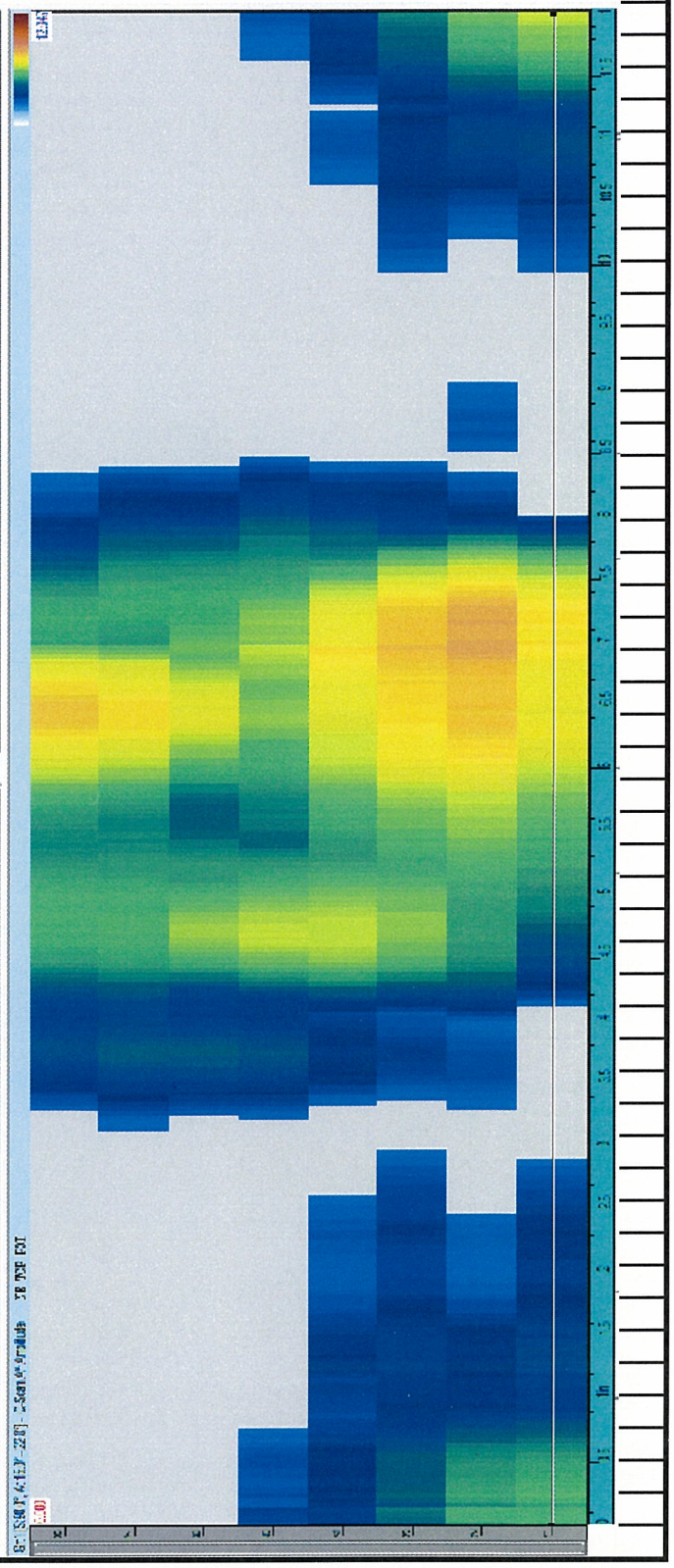

OFFICE / LABORATORY
22 Reservoir Park Drive Unit #1
Rockland, MA 02370

BAKER TESTING SERVICES, INC.

NONDESTRUCTIVE EXAMINATION
METALLURGY AND FAILURE ANALYSIS

(TEL) 781-871-4458
(FAX) 781-871-0123

NON-DESTRUCTIVE TEST REPORT

Customer: HNTB Corporation **Job No.:** 1211-040

NW BOT IN

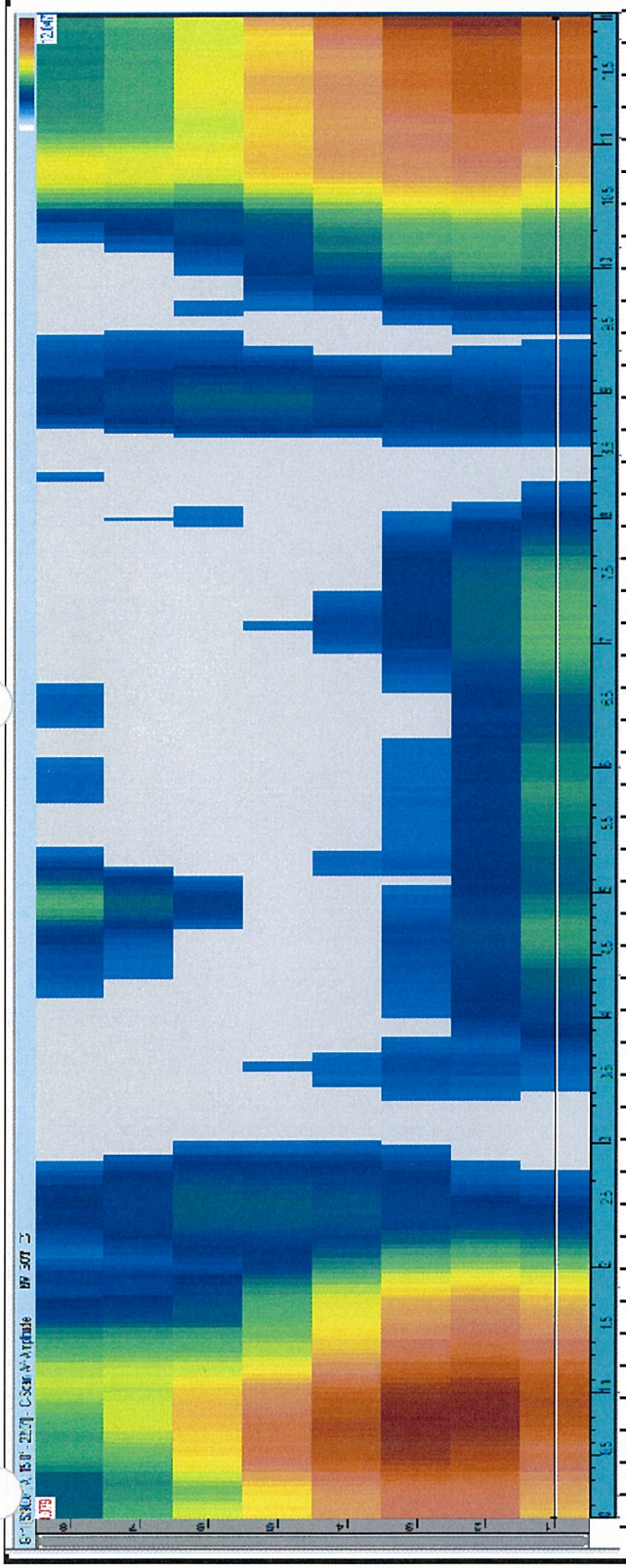

NW BOT OUT

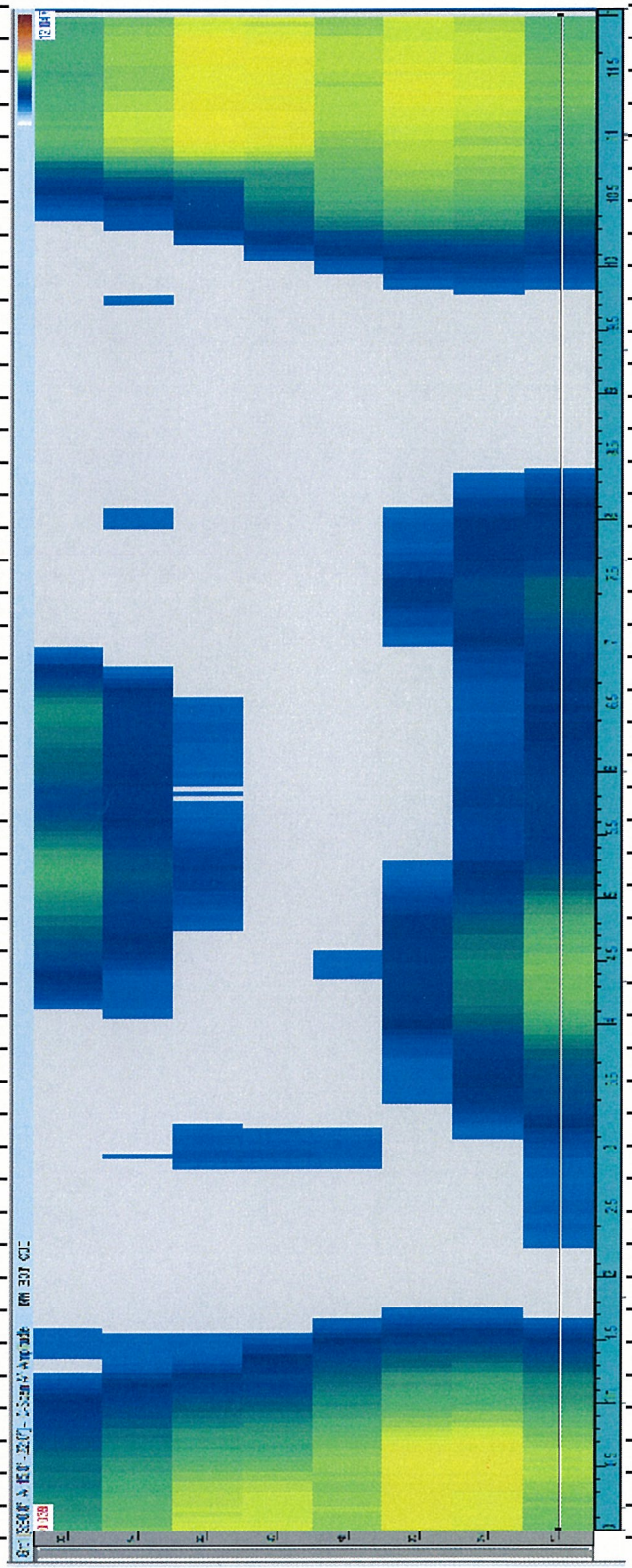

OFFICE / LABORATORY
22 Reservoir Park Drive Unit #1
Rockland, MA 02370

BAKER TESTING SERVICES, INC.

NONDESTRUCTIVE EXAMINATION
METALLURGY AND FAILURE ANALYSIS

(TEL) 781-871-4458
(FAX) 781-871-0123

NON-DESTRUCTIVE TEST REPORT

Customer: HNTB Corporation **Job No.:** 1211-040

NW TOP IN **NW TOP OUT**

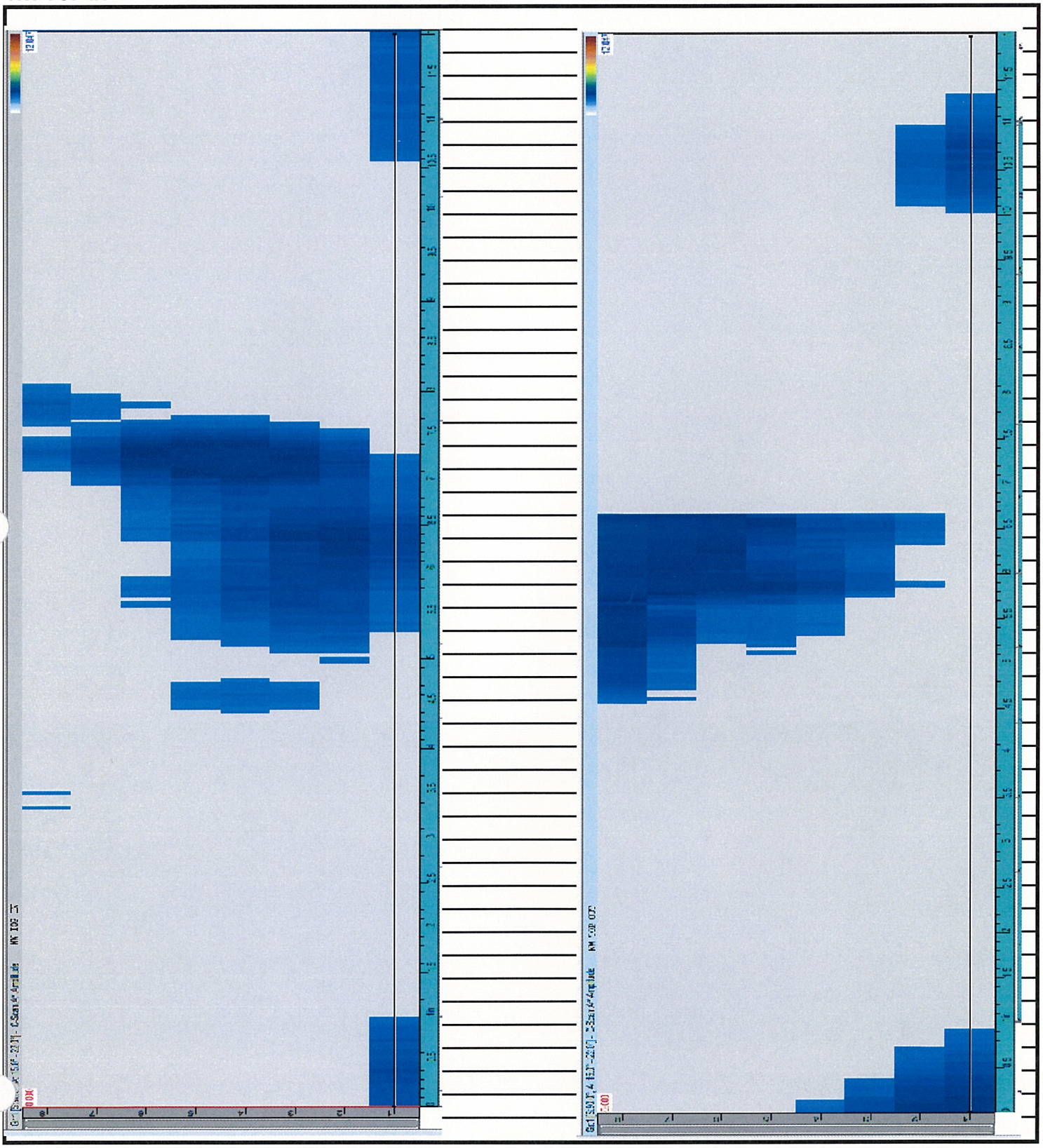

OFFICE / LABORATORY
22 Reservoir Park Drive Unit #1
Rockland, MA 02370

BAKER TESTING SERVICES, INC.

NONDESTRUCTIVE EXAMINATION
METALLURGY AND FAILURE ANALYSIS

(TEL) 781-871-4458
(FAX) 781-871-0123

NON-DESTRUCTIVE TEST REPORT

Customer: HNTB Corporation **Job No.:** 1211-040

SE BOT IN

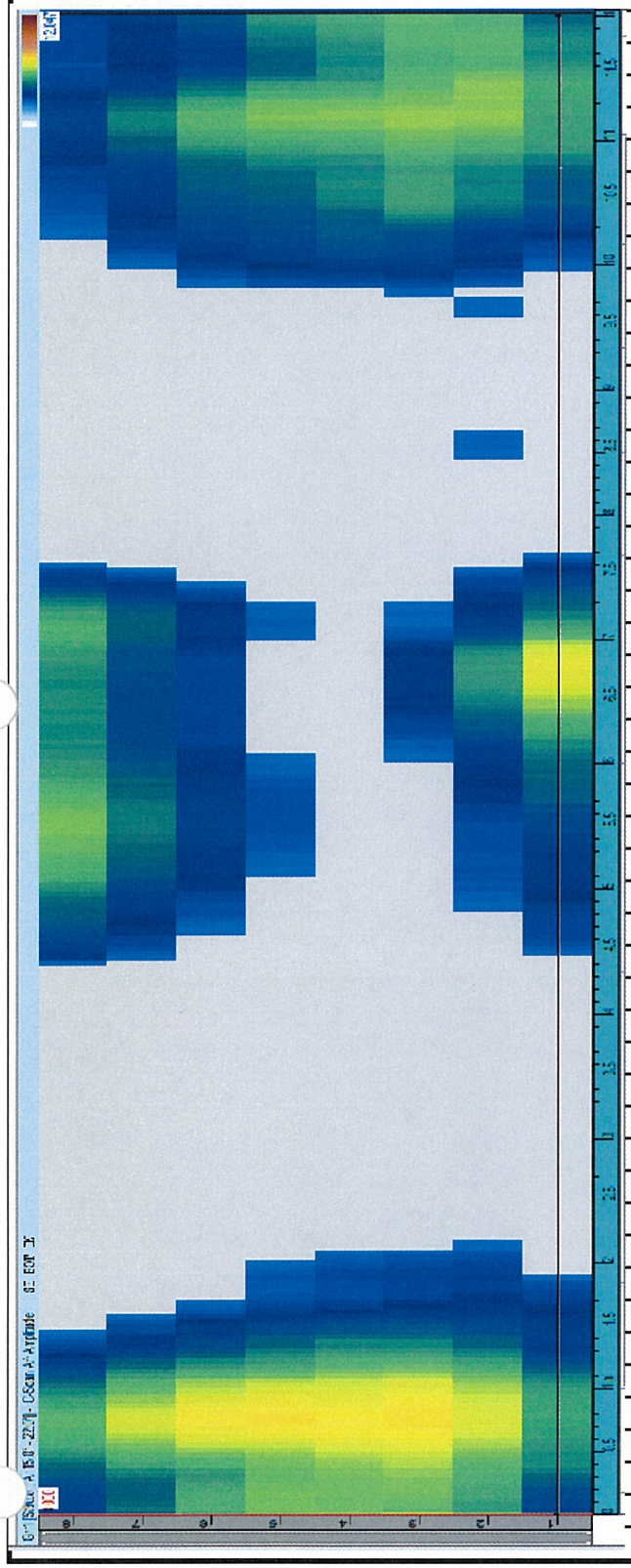

SE BOT OUT

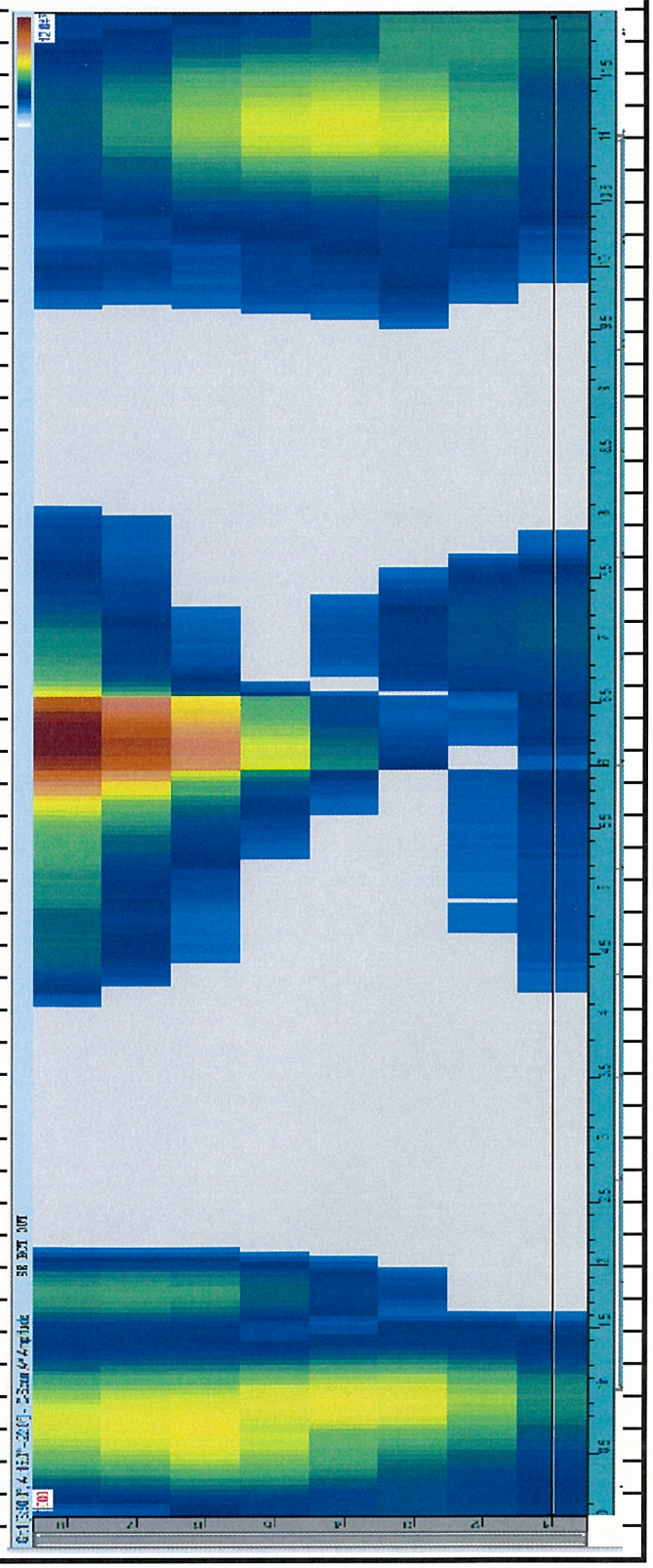

OFFICE / LABORATORY
22 Reservoir Park Drive Unit #1
Rockland, MA 02370

BAKER TESTING SERVICES, INC.

NONDESTRUCTIVE EXAMINATION
METALLURGY AND FAILURE ANALYSIS

(TEL) 781-871-4458
(FAX) 781-871-0123

NON-DESTRUCTIVE TEST REPORT

Customer: HNTB Corporation **Job No.:** 1211-040 **Page:** 7 **of** 25

SE TOP IN

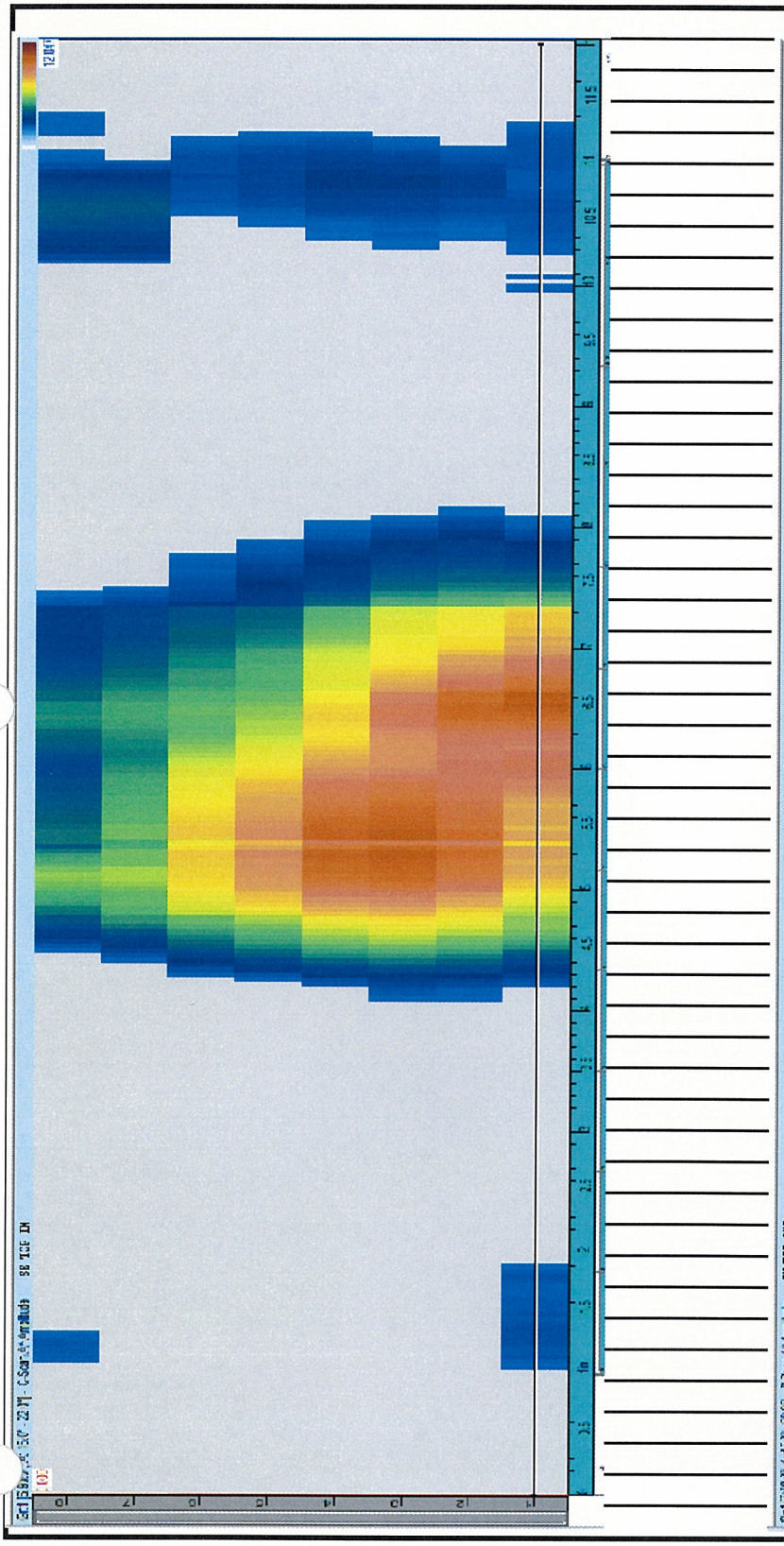

SE TOP OUT

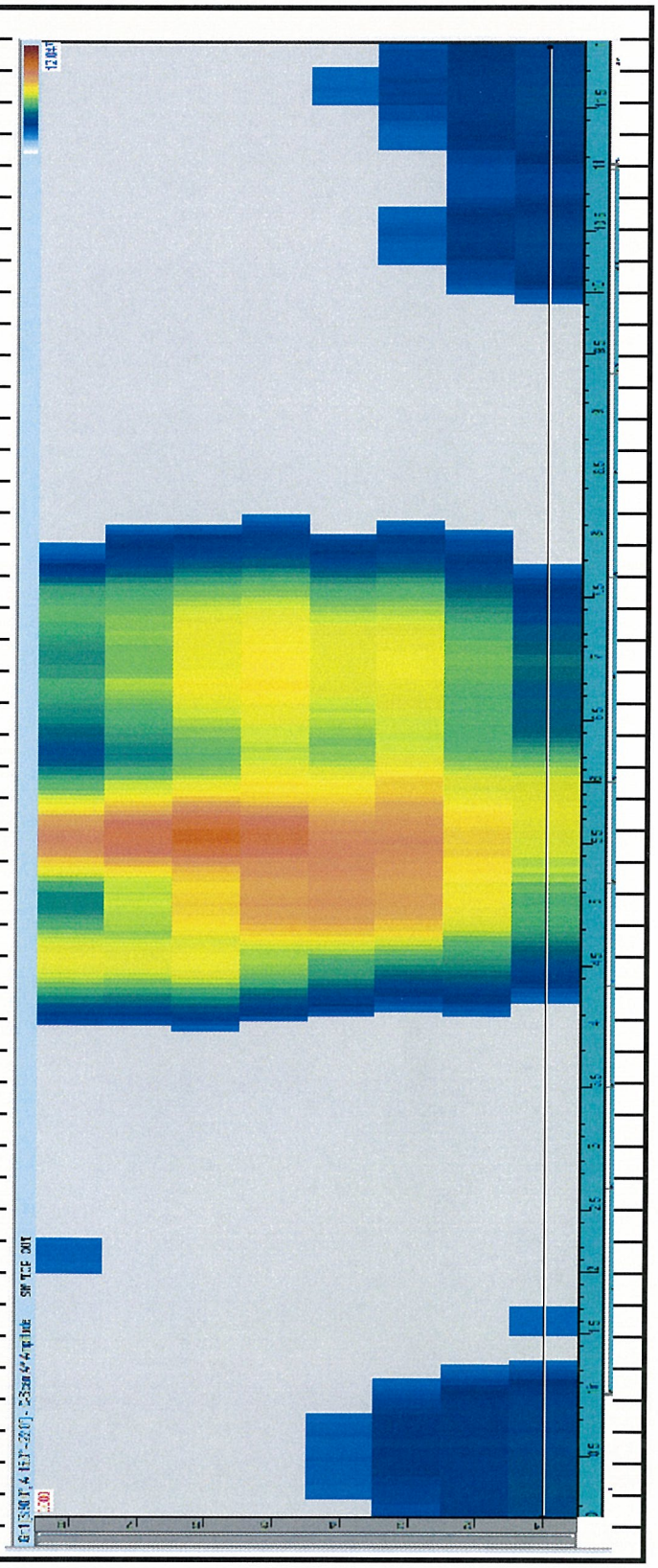

OFFICE / LABORATORY
22 Reservoir Park Drive Unit #1
Rockland, MA 02370

BAKER TESTING SERVICES, INC.

NONDESTRUCTIVE EXAMINATION
METALLURGY AND FAILURE ANALYSIS

(TEL) 781-871-4458
(FAX) 781-871-0123

NON-DESTRUCTIVE TEST REPORT

Customer: HNTB Corporation **Job No.:** 1211-040 **Page:** 8 **of** 25

SW BOT IN

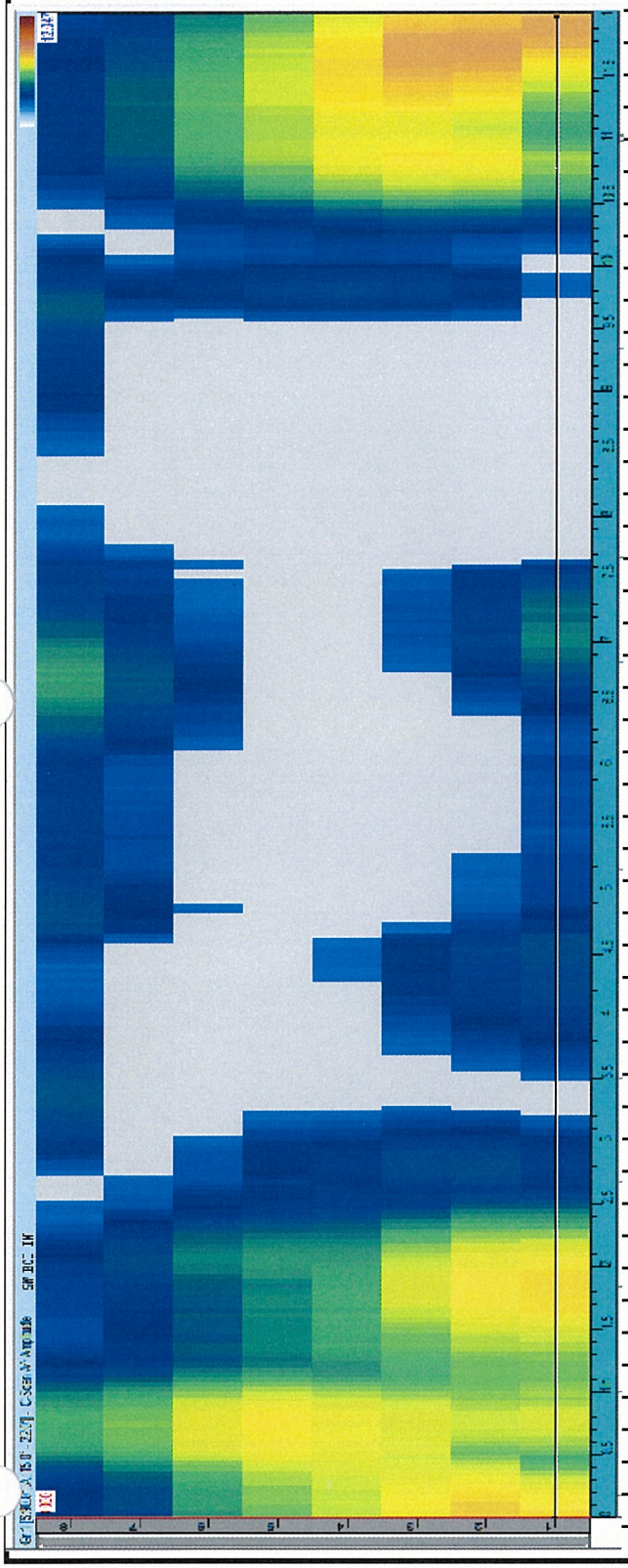

SW BOT OUT

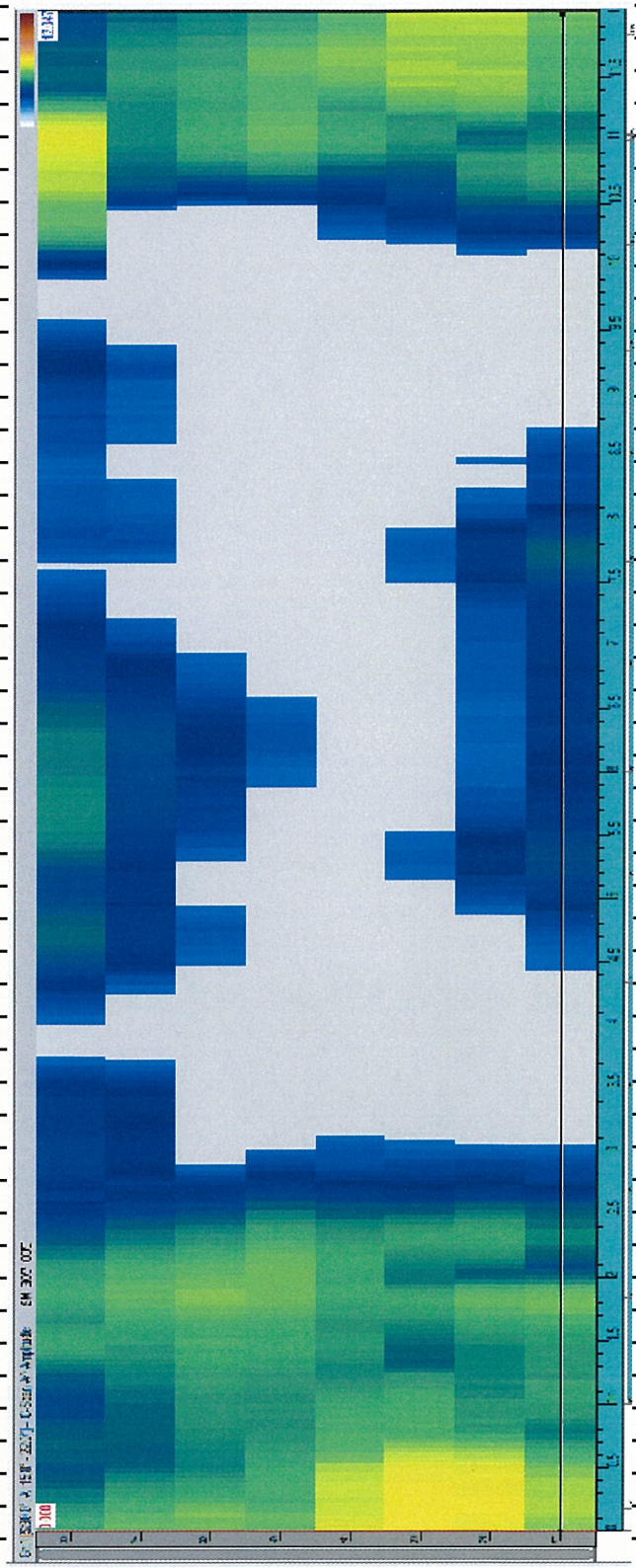

OFFICE / LABORATORY
22 Reservoir Park Drive Unit #1
Rockland, MA 02370

BAKER TESTING SERVICES, INC.

NONDESTRUCTIVE EXAMINATION
METALLURGY AND FAILURE ANALYSIS

(TEL) 781-871-4458
(FAX) 781-871-0123

NON-DESTRUCTIVE TEST REPORT

Customer: HNTB Corporation **Job No.:** 1211-040 **Page:** 9 **of** 25

SW TOP IN

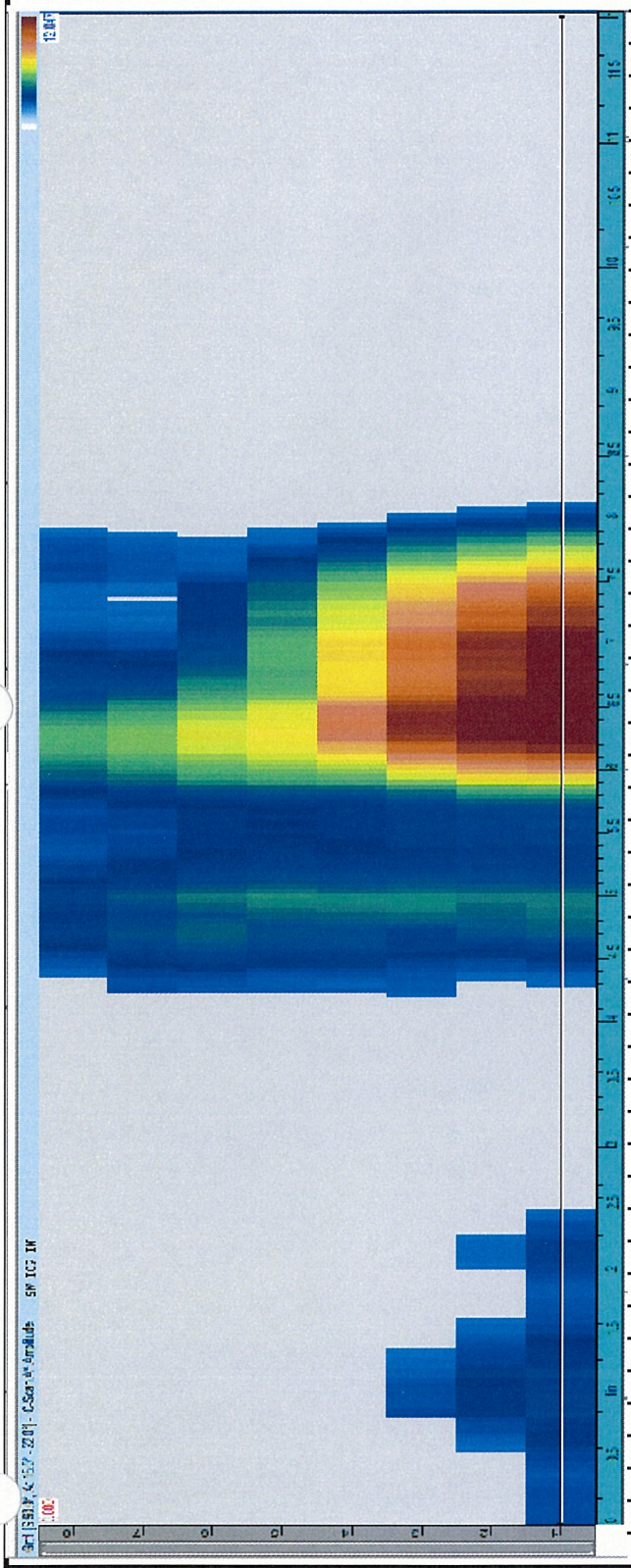

SW TOP OUT

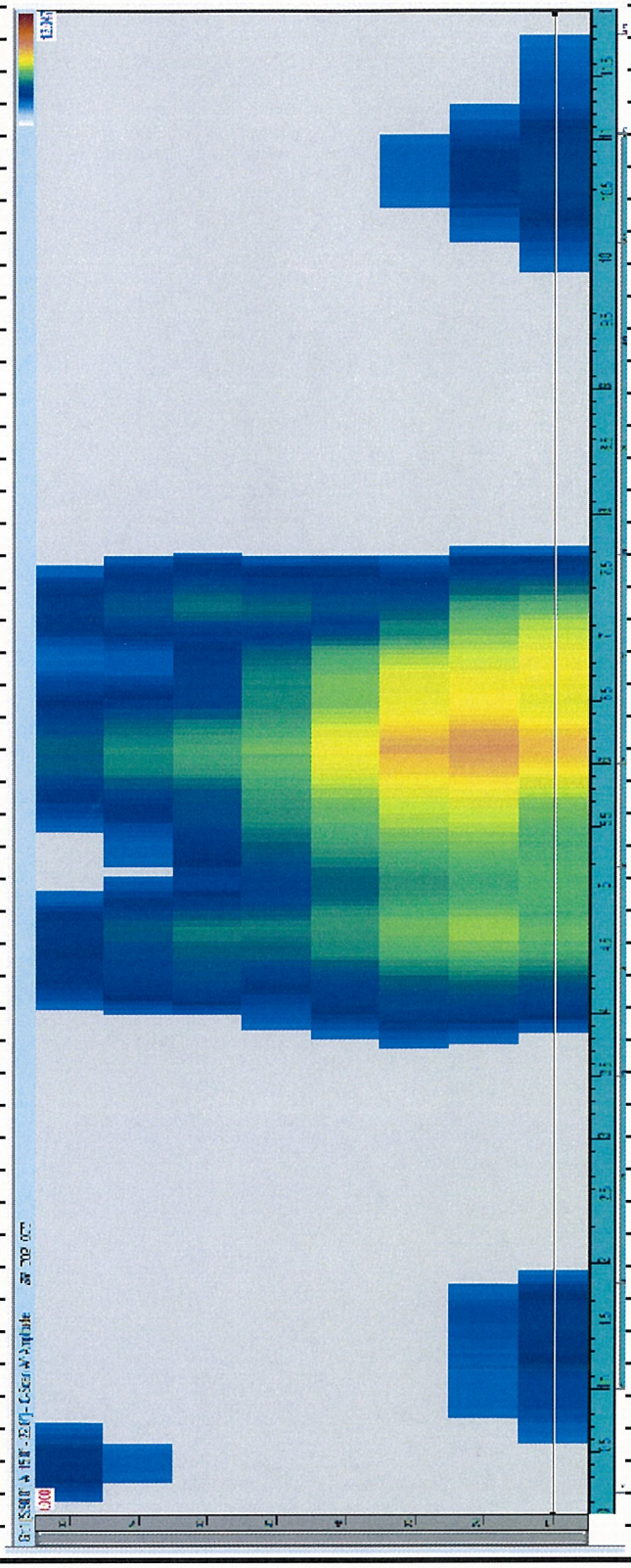

File Name NE Bot In

	Depth (in)	Amplitude (% FSH)	Beam Angle (degrees)
1:00	5.5	25	22
2:00			
3:00			
4:00	9.0	32	15
5:00	4.6	24	22
	9.0	25	15
6:00	4.6	45	22
	9.0	35	15
7:00			
8:00			
9:00			
10:00	7.2	20	17
11:00	5.5	39	21
	6.1	33	19
	7.2	44	17
12:00	5.5	47	21
	6.2	42	20
	6.6	38	18
	7.2	52	16

File Name NE Bot Out

	Depth (in)	Amplitude (% FSH)	Beam Angle (degrees)
1:00			
2:00			
3:00			
4:00			
5:00			
6:00	4.6	20	22
	9.0	20	15
7:00	4.6	26	22
	9.0	24	15
8:00			
9:00			
10:00			
11:00	7.2	20	20
	10.2	20	15
12:00	5.7	20	20
	6.2	22	20
	7.2	34	20
	8.1	22	20

File Name NE Top In

	Depth (in)	Amplitude (% FSH)	Beam Angle (degrees)
1:00	9.0	30	15
2:00			
3:00			
4:00	7.4	24	15
5:00	5.6	45	20
	6.2	30	20
	6.7	46	18
	7.3	64	17
	8.3	52	15
6:00	5.6	41	21
	6.2	36	18
	6.7	62	17
	7.3	72	16
	8.3	56	15
7:00	5.6	29	21
	6.3	40	18
	6.7	39	17
	7.4	38	16
	8.3	38	15
8:00	6.3	20	19
	6.7	25	18
9:00			
10:00	10.2	24	15
11:00			
12:00			

File Name NE Top Out

	Depth (in)	Amplitude (% FSH)	Beam Angle (degrees)
1:00	8.9	30	15
2:00	8.9	26	15
3:00			
4:00	6.1	34	21
	7.3	23	16
5:00	6.1	46	21
	6.5	44	20
	7.2	49	18
	8.2	44	16
6:00	5.5	28	22
	6.1	54	22
	6.5	41	21
	7.1	42	18
	8.1	57	17
7:00	5.5	23	22
	6.0	43	22
	6.5	43	20
	7.1	53	18
	8.1	67	16
8:00	6.1	26	22
	6.6	36	19
	7.2	26	17
	8.1	28	16
9:00			
10:00	8.9	21	15
11:00	8.9	34	15
	10.1	20	15
12:00	8.8	30	16
	10.1	55	15

File Name NW Bot In

	Depth (in)	Amplitude (% FSH)	Beam Angle (degrees)
1:00	5.5	52	21
	6.1	40	20
	6.6	73	17
	7.2	94	16
	8.2	68	15
2:00	5.5	22	21
	6.1	21	20
	6.6	20	17
	7.2	49	16
3:00			
4:00	8.9	33	15
5:00	4.5	42	22
	8.9	37	15
	10.1	33	15
6:00	4.5	21	22
	9.0	38	15
	10.1	40	15
7:00	7.3	24	15
	9.0	47	15
	10.1	30	15
8:00	6.1	20	20
	7.2	20	17
	8.9	29	15
9:00	6.1	35	20
	7.2	26	16
10:00	6.6	20	17
	7.3	42	16
	8.2	20	15
11:00	5.5	51	22
	6.1	33	19
	6.6	73	17
	7.2	77	16
	8.2	51	15
12:00	5.5	42	21
	6.1	54	20
	6.6	64	17
	7.2	93	16
	7.8	24	16
	8.2	79	15

File Name NW Bot Out

	Depth (in)	Amplitude (% FSH)	Beam Angle (degrees)
1:00	5.6	23	21
	6.3	37	19
	6.7	30	18
	7.4	46	16
	8.2	30	16
2:00			
3:00	6.3	24	20
	9.0	23	15
4:00	9.0	45	15
	10.2	24	15
5:00	4.6	42	22
	9.0	40	15
6:00	4.6	37	22
	9.0	31	15
7:00	4.6	20	22
	9.0	31	15
8:00	9.0	29	15
9:00			
10:00	7.3	27	16
11:00	5.6	29	22
	6.2	55	20
	6.6	26	19
	7.3	52	17
	8.2	20	16
12:00	5.6	37	22
	6.3	53	19
	6.6	45	19
	7.3	53	17
	8.2	35	16

File Name NW Top In

	Depth (in)	Amplitude (% FSH)	Beam Angle (degrees)
1:00	10.0	20	15
2:00			
3:00			
4:00			
5:00	7.2	20	16
6:00	6.5	21	19
	7.2	26	16
7:00	6.5	27	18
	7.2	25	17
8:00	5.5	20	22
9:00			
10:00			
11:00	10.1	20	15
12:00	10.1	23	15

File Name NW Top Out

	Depth (in)	Amplitude (% FSH)	Beam Angle (degrees)
1:00			
2:00			
3:00			
4:00			
5:00	5.6	24	22
6:00	5.6	27	22
	6.2	31	22
	7.3	26	19
7:00			
8:00			
9:00			
10:00	9.0	21	15
11:00	9.0	24	15
12:00	9.0	26	16

File Name SE Bot In

	Depth (in)	Amplitude (% FSH)	Beam Angle (degrees)
1:00	5.5	23	22
	6.6	56	19
	7.3	57	17
	8.3	40	16
2:00	7.3	23	17
3:00			
4:00			
5:00	4.7	41	22
	9.0	21	15
	10.2	28	15
6:00	4.7	42	22
	8.9	29	15
	10.2	38	15
7:00	4.7	45	22
	9.0	36	15
	10.1	48	15
8:00			
9:00			
10:00	6.7	31	17
	7.3	24	17
11:00	5.6	24	22
	6.2	28	20
	6.7	46	18
	7.3	48	17
	8.3	43	16
12:00	5.5	20	22
	6.6	32	19
	7.3	48	17
	8.2	33	16

File Name SE Bot Out

	Depth (in)	Amplitude (% FSH)	Beam Angle (degrees)
1:00	6.2	52	21
	6.6	31	19
	7.3	57	18
	8.3	25	16
2:00	5.6	20	22
	6.2	31	20
3:00			
4:00			
5:00	4.7	41	22
	8.9	24	15
6:00	4.7	101	22
	8.9	25	15
7:00	4.7	40	22
	8.9	37	15
	10.1	30	15
8:00	4.7	24	22
9:00			
10:00	5.7	26	22
	6.7	29	17
11:00	5.6	20	21
	6.2	43	20
	6.7	54	18
	7.3	33	17
	8.3	21	15
12:00	5.6	25	21
	6.7	29	17
	7.3	41	17
	8.3	28	15

File Name SE Top In

	Depth (in)	Amplitude (% FSH)	Beam Angle (degrees)
1:00	4.9	22	22
	10.4	21	15
2:00			
3:00			
4:00			
5:00	5.8	52	20
	6.4	54	19
	6.9	77	17
	7.5	48	16
	8.5	47	15
6:00	5.9	35	19
	6.4	43	19
	6.9	72	17
	7.5	74	16
	8.5	75	15
7:00	5.8	39	19
	6.4	31	19
	6.9	61	16
	7.5	69	15
8:00	6.9	24	17
9:00			
10:00	10.4	21	15
11:00	4.9	23	21
	7.0	24	19
	9.1	23	15
12:00			

File Name SE Top Out

	Depth (in)	Amplitude (% FSH)	Beam Angle (degrees)
1:00	8.7	29	15
2:00			
3:00			
4:00	5.9	22	21
5:00	6.0	43	20
	6.4	69	18
	7.1	54	16
	8.0	44	16
6:00	5.3	27	22
	5.9	57	20
	6.4	61	19
	7.1	43	16
	8.0	55	16
7:00	5.4	23	22
	5.9	39	22
	6.4	60	19
	7.1	38	17
	8.0	28	16
8:00	6.4	30	19
	7.1	22	16
9:00			
10:00	8.7	24	15
11:00	8.7	26	15
12:00	8.7	31	15

File Name SW Bot In

	Depth (in)	Amplitude (% FSH)	Beam Angle (degrees)
1:00	6.7	51	17
	7.3	43	17
	8.3	51	15
2:00	6.7	43	18
	7.3	43	17
	8.3	58	16
3:00	7.3	31	16
	8.3	22	15
4:00	8.9	31	15
5:00	4.7	33	22
	8.9	25	15
	10.0	21	15
6:00	4.6	28	22
	8.9	24	15
	10.1	22	15
7:00	4.6	39	22
	8.9	40	15
	10.0	25	15
8:00	4.6	22	22
9:00			
10:00	6.3	27	19
11:00	5.5	20	22
	6.2	39	19
	6.7	58	17
	7.3	48	16
	8.3	33	15
12:00	6.3	37	17
	6.7	62	17
	7.3	64	16
	8.3	35	15

File Name SW Bot Out

	Depth (in)	Amplitude (% FSH)	Beam Angle (degrees)
1:00	6.6	54	19
	7.3	43	17
	8.3	51	15
2:00	6.6	42	19
	7.3	44	17
	8.3	59	16
3:00	7.3	31	16
	8.3	22	15
4:00	4.7	20	22
	8.9	31	15
5:00	4.7	33	22
	8.9	25	15
	10.0	21	15
6:00	4.6	29	22
	8.9	25	15
	10.1	22	15
7:00	4.6	38	22
	8.9	40	15
	10.1	24	15
8:00	4.6	22	22
9:00			
10:00	6.4	25	16
11:00	5.5	20	22
	6.2	39	19
	6.6	53	19
	7.3	48	16
	8.3	33	15
12:00	6.3	36	17
	6.7	63	17
	7.3	64	16
	8.3	35	15

File Name SW Top In

	Depth (in)	Amplitude (% FSH)	Beam Angle (degrees)
1:00	8.9	32	15
	10.1	24	15
2:00	8.9	23	15
3:00			
4:00			
5:00	5.5	22	22
	6.2	31	20
	6.6	39	20
	7.3	22	16
	8.3	39	16
6:00	5.5	29	22
	6.2	42	20
	6.6	45	20
	7.3	28	16
	8.3	73	15
7:00	5.5	25	22
	6.2	26	19
	7.3	27	16
	8.3	111	15
8:00	6.7	22	17
	8.3	28	15
9:00			
10:00			
11:00			
12:00			

File Name SW Top Out

	Depth (in)	Amplitude (% FSH)	Beam Angle (degrees)
1:00	9.0	24	15
	10.2	20	15
2:00			
3:00			
4:00	6.2	22	20
	6.6	20	19
	7.3	31	16
	8.3	22	16
5:00	6.2	27	18
	6.7	29	17
	7.3	44	16
	8.3	46	15
6:00	5.6	29	21
	6.2	47	19
	6.6	42	18
	7.3	64	17
	8.3	51	15
7:00	6.1	26	21
	6.7	27	17
	7.3	42	17
	8.2	51	16
8:00			
9:00			
10:00	9.0	21	15
11:00	9.0	29	15
12:00			

Appendix B

Underwater Inspection and Material Testing
Sarah Mildred Long Bridge Rehabilitation
MAINE DEPARTMENT OF TRANSPORTATION

December 2011

Presented to:

HNTB
340 County Road, Suite 6-C
Westbrook, ME 04092
207-774-5155

Prepared by:

CHILDS ENGINEERING CORPORATION
34 William Way, Bellingham, Massachusetts 02019

Phone: 508-966-9092

Table of Contents

SUMMARY 1
INTRODUCTION 1
OBJECTIVE 1
STRUCTURE DESCRIPTION 1
OBSERVATIONS 2
Pier 15 2
Pier 16 2
Pier 17 3
Pier 18 3
Pier 19 3
Pier 20 4
APPENDIX A – Photographs
APPENDIX B – Underwater Inspection Reports
APPENDIX C – SIMCO Technologies Report (Available January 2012)

SUMMARY

The above water and underwater portions of Piers 15 through 20 of the Sarah Mildred Bridge were found to be in Satisfactory condition. Most of the observed deterioration was found between elevations +6.0' and +10.5' MLW and consists of cracks, spalls and spalls with exposed reinforcing steel. The granite block facing remains in good condition. The concrete below the waterline remains sound with a maximum of 3/8" softness. Steel cofferdams used during construction are visible at each pier. No evidence of scour was observed.

INTRODUCTION

In November 2011, Childs Engineering Corporation completed an above water and underwater inspection of Piers 15 through 20 of the Sarah Mildred Bridge. The inspection was performed by a four-man dive team under the direction of a professional engineer and included a visual and tactile inspection of exposed vertical faces between the mudline and the top of each pier. Typical defects including concrete cracks and spalls are shown on Drawings X-101 through X-107. Above and underwater photographs of typical and atypical conditions are found in Appendix A. Underwater inspection reports are found in Appendix B.

In October 2011, Black Dog Divers of Portsmouth, NH, acting as a subcontractor to Childs, drilled two concrete cores from each of the six inspected piers. Cores were shipped to SIMCO Technologies, Inc. of Quebec, Canada for testing and analysis. Testing and analysis is ongoing at this time. Results will be used to confirm service life simulations, conclusions and recommendations for repair. SIMCO's report will be available in January 2012.

OBJECTIVE

The objective of this project is to document the existing condition of Piers 15 through 20, determine the rate of concrete deterioration through testing and analysis of concrete cores, and assist in the development of plans for the rehabilitation of theses piers for the proposed service life of 75 years.

STRUCTURE DESCRIPTION

The Sarah Mildred Long Bridge was constructed circa 1940 over the Piscataqua River and connects Portsmouth, New Hampshire to Kittery, Maine by way of U.S. Route 1 Bypass. The bridge is 2,804 feet long and is supported by a total of 23 piers. Piers 15 through 20, the focus of this inspection, support five truss spans and the lift bridge section. Each pier consists of a concrete base supporting a reinforcing concrete shaft. Each concrete base bears on bedrock at elevations ranging between -50.9' MLW (Pier 20) to -88.9' MLW (Pier 16). Reinforced concrete shafts extend from the top of the concrete base to elevation +10.5' MLW and have a granite facing between elevations +6' and -6' MLW (see Photo 1). Horizontal and vertical joints between granite stones are filled with lead wool. Mudline elevations range between elevation -16' MLW (Pier

20) to -65' MLW (Pier 17). Steel sheetpile cofferdams used during construction remain in place and are visible at each pier.

OBSERVATIONS

In general, Piers 15 through 20 exhibit similar marine growth profiles. Light marine growth was observed between approximate EL – 8' MLW and the mudline. A thick layer of mussels was observed between mid tide and approximately EL -8' MLW, and barnacles were observed between mid tide and high tide. The granite block facing and concrete shaft is clean between high tide and the top of the pier at elevation +10.5 MLW. Divers used hand tools to remove marine growth from selected areas so that the concrete shaft, granite block facing and mortar joints could be closely examined. Shovels and ice scrapers were used to remove mussels and barnacles from the granite block facing above the waterline.

Most of the deterioration observed during the above water and underwater inspection was found in the reinforced concrete shaft between elevations +6.0' and +10.5' MLW. Deterioration typically consists of cracks, spalls and spalls with exposed reinforcing steel. Below water, the concrete exhibits 1/8" to 3/8" softness. Minor honeycombing and spalling was also observed. Steel sheetpile cofferdams used to construct the piers remain in place and are still visible. Horizontal steel beams embedded in the concrete extend up to 4 inches beyond the face of the shaft. These steel beams, along with the observed portions of the steel sheetpile cofferdams are shown on Drawings X-102 through X-107. The river bottom typically consists of dense silt, gravel and cobbles. No loose organic material is present due to the high currents in the river. No evidence of scour was observed. Following is a summary of observed conditions at each pier.

Pier 15

Pier 15 is 32 feet long and 10 feet wide measured at the top of the concrete shaft. The upriver (west) and downriver (east) bullnoses have the shape of a 103 degree triangle. The mudline is located at elevation -36' MLW, and the top of the steel sheetpile cofferdam is at elevation -30' MLW. Construction drawings indicate that the concrete base bears on rock at an average elevation of -57.8' MLW. In general, the concrete above and below water remains hard and sound with a maximum of 1/8" softness. Specific anamolies are shown on Drawing X-102 and include cracks, spalls and spalls with exposed reinforcing steel. Granite blocks and lead wool pointing remain in good condition (see Photos 2 through 4).

Pier 16

Pier 16 is 33 feet long and 9 feet wide measured at the top of the concrete shaft. The upriver (west) and downriver (east) bullnoses have the shape of a 100 degree triangle. The mudline is located at elevation -62' MLW and the top of the steel sheetpile cofferdam is at elevation -40' MLW. Construction drawings indicate that the concrete base bears on rock at an average elevation of -88.9' MLW. In general, the concrete above and below the water remains hard and sound with 1/4" to 3/8" softness. Specific anomalies are shown on Drawing X-103 and include cracks and spalls between

elevation +6’ and +10.5’ MLW at the east and west ends of the pier. A steel angle on the east bullnose at elevation -33’ MLW can be chipped off but the underlying concrete is sound. Granite blocks and lead wool pointing remain in good condition (see Photos 5 through 7).

Pier 17

Pier 17 is 66 feet long and 25 feet wide measured at the top of the concrete shaft. The upriver (west) and downriver (east) bullnoses have the shape of a 100 degree triangle. Mudline elevations vary between -53’ and -66’ MLW, and the top of the steel sheetpile cofferdam is at elevation -44’ MLW. A large pile of granite blocks was observed on the mudline west of the cofferdam. Construction drawings indicate that the concrete base bears on rock at an average elevation of -77.1’ MLW. In general, the concrete above and below the water remains hard and sound with 1/8” to 1/4” softness. Specific anomalies are shown on Drawing X-104 and include minor honeycombs below water and spalls with reinforcing steel exposed above water. Granite blocks and lead wool pointing remain in good condition (see Photos 8 through 11).

Pier 18

Pier 18 is 66 feet long and 25 feet wide measured at the top of the concrete shaft. The upriver (west) and downriver (east) bullnoses have the shape of a 100 degree triangle. Mudline elevations vary between -46’ and -61’ MLW, and the top of the steel sheetpile cofferdam is at elevation -35’ MLW. Construction drawings indicate that the concrete base bears on rock at an average elevation of -67’ MLW. In general, the concrete above and below the water remains hard and sound with a maximum of 1/8” softness. Specific anomalies are shown on Drawing X-105 and include minor concrete cracks and a vertical crack in a granite block located at the top course on the south side. All other granite blocks and wool pointing remain in good condition (see Photo 12 and 13).

Pier 19

Pier 19 is 33 feet long and 9 feet wide measured at the top of the concrete shaft. The upriver (west) and downriver (east) bullnoses have the shape of a 100 degree triangle. Mudline elevations vary between -32’ and -40’ MLW, and the top of the steel sheetpile cofferdam is at elevation -40’ MLW. Construction drawings indicate that the concrete base bears on rock at an average elevation of -56’ MLW. In general, the concrete above and below the water remains hard and sound with a maximum of 3/8” softness. Specific anomalies are shown on Drawing X-106 and include minor honeycombs, cracks and spalls. Granite blocks and lead wool pointing remain in good condition (see Photo 14).

Pier 20

Pier 20 is 32 feet long and 10 feet wide measured at the top of the concrete shaft. The upriver (west) and downriver (east) bullnoses have the shape of a 103 degree triangle. The mudline elevations vary between -17' MLW and -23' MLW, and the top of the steel sheetpile cofferdam is at elevation -20.5' MLW. Construction drawings indicate that the concrete base bears on rock at an average elevation of -50.9' MLW. In general, the concrete above and below water remains hard and sound with a maximum of 3/8" softness. Specific anomalies are shown on Drawing X-107 and include minor cracks and spalls on the south face between elevations +6' and +10.5' MLW. Granite blocks and lead wool remain in good condition (see Photo 15 and 16).

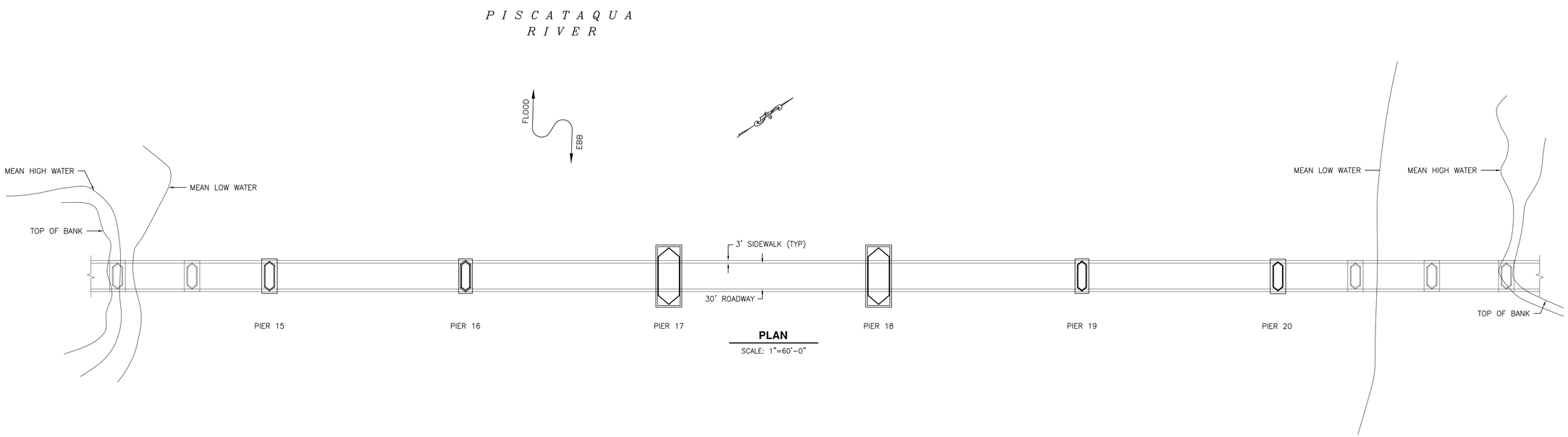

PLAN

SCALE: 1"=60'-0"

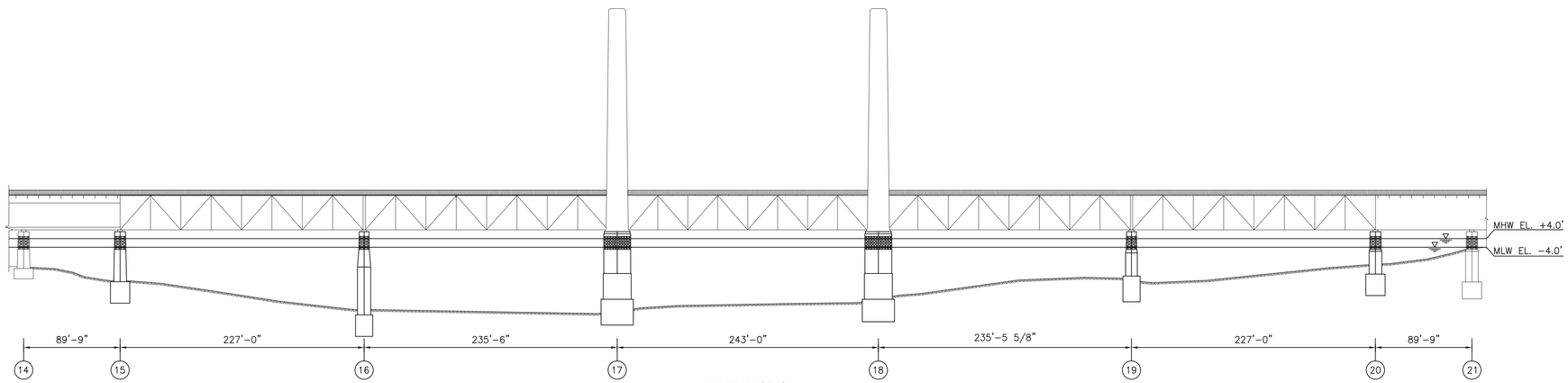

ELEVATION

SCALE: 1"=60'-0"

REFERENCED FROM:
STATE OF NEW HAMPSHIRE DEPARTMENT OF PUBLIC WORKS
AND HIGHWAYS BRIDGE DESIGN DIVISION
US 1 BYPASS OVER PISCATAQUA RIVER
GENERAL PLAN AND ELEVATION - PARTS 2 AND 3
DATED 7/1979

CHILDS ENGINEERING CORPORATION
BOX 333 MEDFIELD, MASSACHUSETTS 02052 U.S.A.
Phone: (508) 359-8945 Fax: (508) 359-2751
E-mail: mail@childseng.com

Mark	Description	Date	Appr.

Designed by: CDS	Date: 12/14/11	
Dwn. by: APL	Ckd. by: CDS	Design file no. 229311 X-101
Reviewed by: CDS	Scale: 1"=60'-0"	

MAINE DEPARTMENT OF TANSPORTATION
SML BRIDGE SUB-STRUCTURE INSPECTION
PORTSMOUNTH NH TO KITTERY ME

PLAN AND ELEVATION

Sheet reference number:
X-101
Sheet 1 of 7

TOM QUINN K:\2293-11.00 SML BRIDGE INSPECTION\CADD\CURRENT WORKING DWGS\229311 X-101 PLAN AND ELEVATION.DWG Dec 19, 2011 - 8:19am

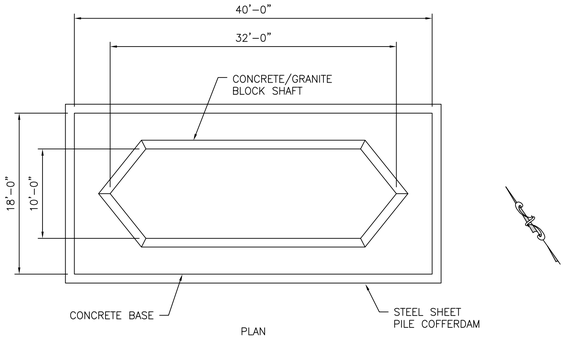

PLAN

LEGEND

- CONDITION NOTES
- MUDLINE
- MUDLINE INSIDE SHEET PILE COFFERDAM
- AVERAGE ROCK ELEVATION
- AREA OF SPALLED CONCRETE
- AREA OF MULTIPLE HAIRLINE CRACKS
- CRACK

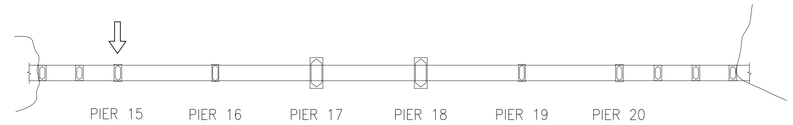

KEY PLAN

SCALE: NONE

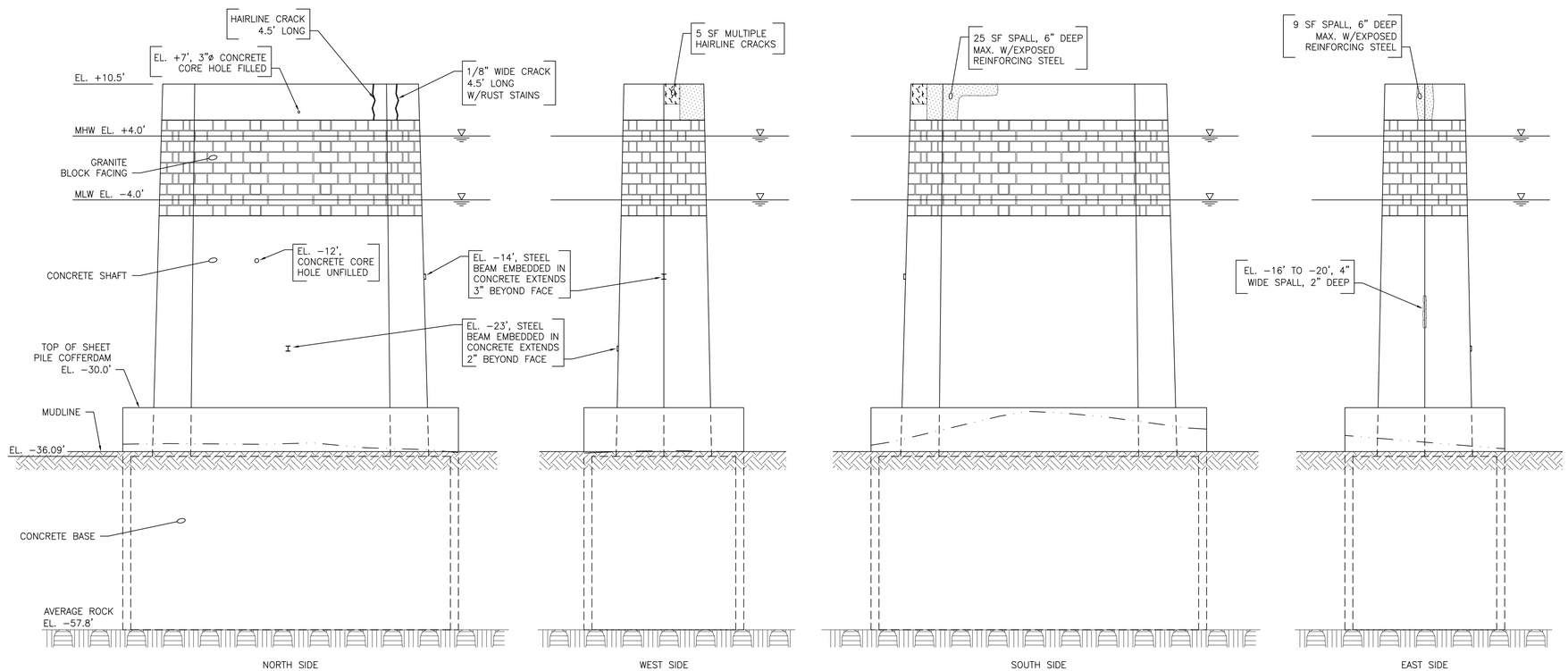

PIER 15

SCALE: 1/8"=1'-0"

DATUM:
MEAN LOW WATER = 0.0'

REFERENCED FROM:
P.W.A. PROJECT NO. N.H. 1037-F, MAINE 1088-F
MAINE - NEW HAMPSHIRE INTERSTATE BRIDGE AUTHORITY
PISCATAQUA RIVER BRIDGE
PORTSMOUTH, N.H. TO KITTERY, ME
PIERS 15 AND 20
BY HARRINGTON AND CORTELYOU
DATED 4/20/39 SHEET NO. 8

CHILDS ENGINEERING CORPORATION
BOX 333 MEDFIELD, MASSACHUSETTS 02052 U.S.A.
Phone: (508) 359-8945 Fax: (508) 359-2751
E-mail: mail@childseng.com

Mark	Description	Date	Appr.

Designed by: CDS	Date: 12/14/11		
Dwn by: APL	Ckd by: CDS	Design file no: 229311 X-102	
Reviewed by: CDS		Scale: 1/8"=1'-0"	

MAINE DEPARTMENT OF TANSPORTATION
SML BRIDGE SUB-STRUCTURE INSPECTION
PORTSMOUTH NH TO KITTERY ME

PIER 15
PLAN AND ELEVATIONS

Sheet reference number:
X-102
Sheet 2 of 7

TOM QUINN K:\2293-11.00 SML BRIDGE INSPECTION\CADD\CURRENT WORKING DWGS\229311 X-102 PIER 15.DWG Dec 14, 2011 - 11:47am

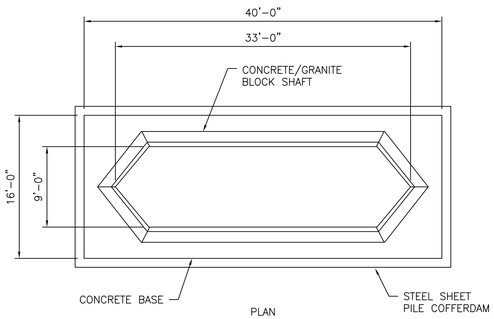

PLAN

LEGEND

- CONDITION NOTES
- MUDLINE
- MUDLINE INSIDE SHEET PILE COFFERDAM
- AVERAGE ROCK ELEVATION
- AREA OF SPALLED CONCRETE
- CRACK

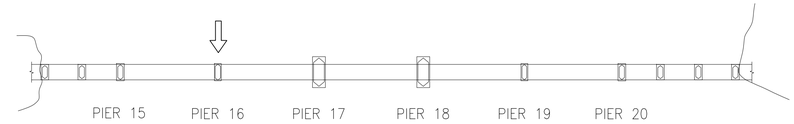

KEY PLAN

SCALE: NONE

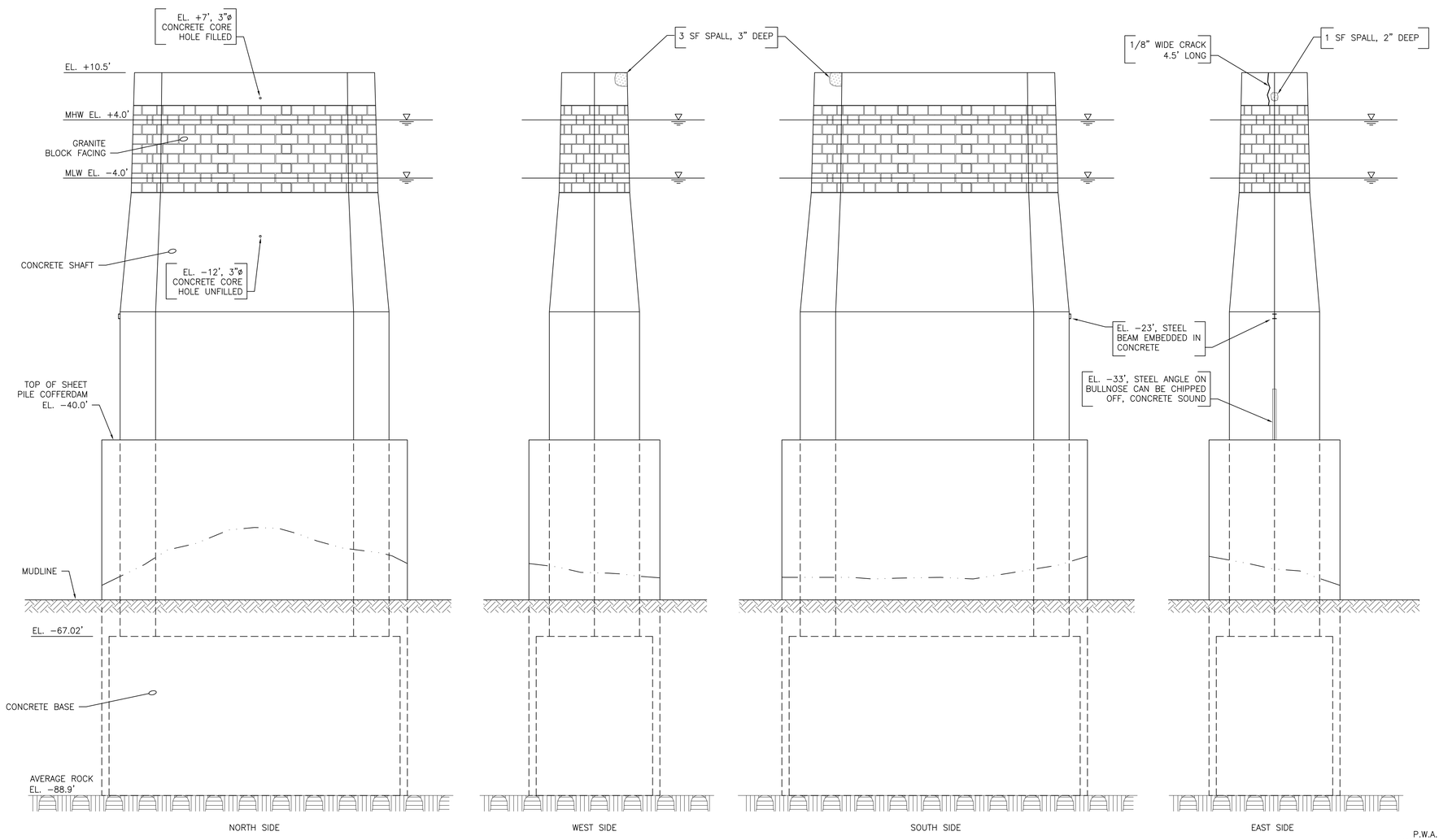

PIER 16

SCALE: 1/8"=1'-0"

DATUM:
MEAN LOW WATER = 0.0'

REFERENCED FROM:
P.W.A. PROJECT NO. N.H. 1037-F, MAINE 1088-F
MAINE – NEW HAMPSHIRE INTERSTATE BRIDGE AUTHORITY
PISCATAQUA RIVER BRIDGE
PORTSMOUTH, N.H. TO KITTERY, ME
PIERS 16 AND 19
BY HARRINGTON AND CORTELYOU
DATED 4/20/39 SHEET NO. 9

CHILDS ENGINEERING CORPORATION
BOX 333 MEDFIELD, MASSACHUSETTS 02052 U.S.A.
Phone: (508) 359-8945 Fax: (508) 359-2751
E-mail: mail@childseng.com

Mark	Description	Date	Appr.

Designed by: CDS	Cad by: CDS	Date: 12/14/11	Design file no. 229311 X-103
Dwn by: APL	Reviewed by: CDS	Scale: 1/8"=1'-0"	

MAINE DEPARTMENT OF TANSPORATION
SML BRIDGE SUB-STRUCTURE INSPECTION
PORTSMOUNTH NH TO KITTERY ME

PIER 16
PLAN AND ELEVATIONS

Sheet reference number:
X-103
Sheet 3 of 7

TOM QUINN K:\2293-11.00 SML BRIDGE INSPECTION\CADD\CURRENT WORKING DWGS\229311 X-103 PIER 16.DWG Dec 19, 2011 - 8:21am

LEGEND

- [ ] CONDITION NOTES
- MUDLINE
- MUDLINE INSIDE SHEET PILE COFFERDAM
- AVERAGE ROCK ELEVATION
- AREA OF SPALLED CONCRETE
- CRACK

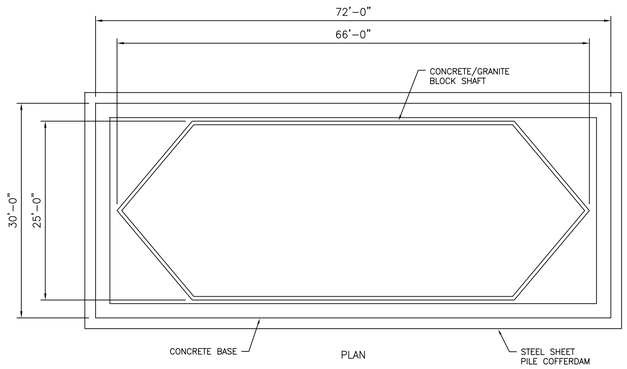

PLAN

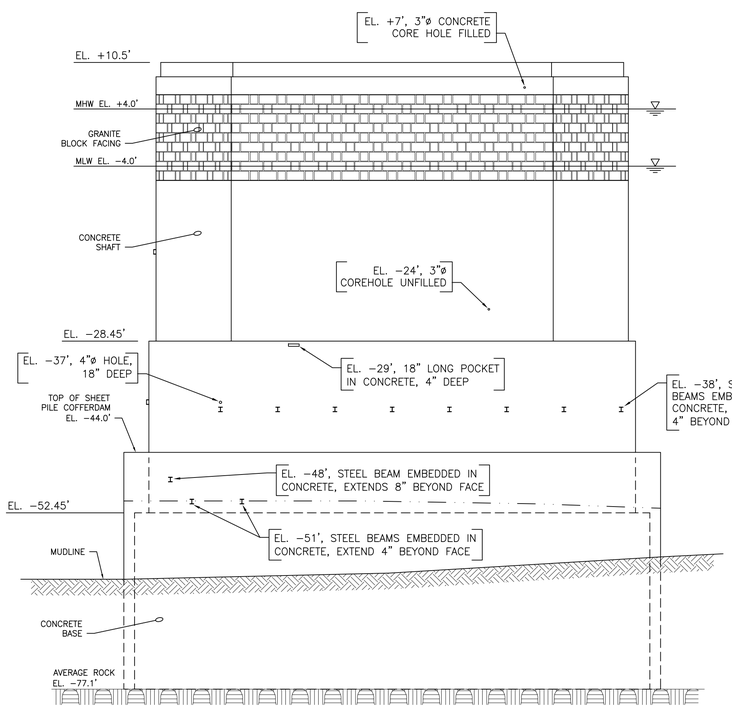

NORTH SIDE

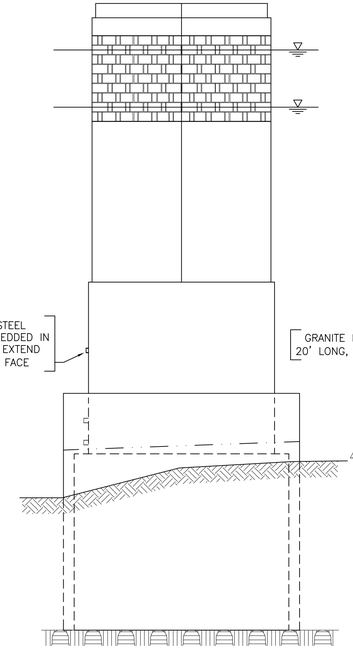

WEST SIDE

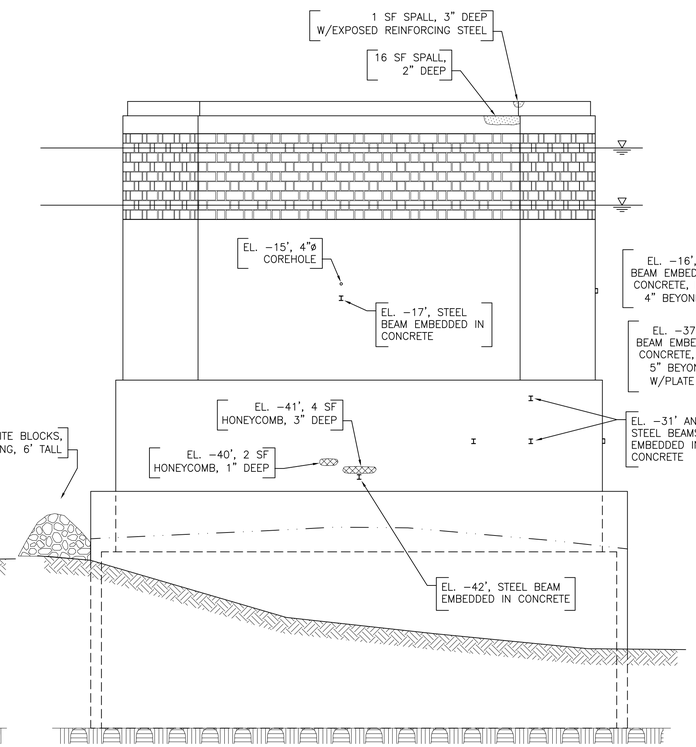

SOUTH SIDE

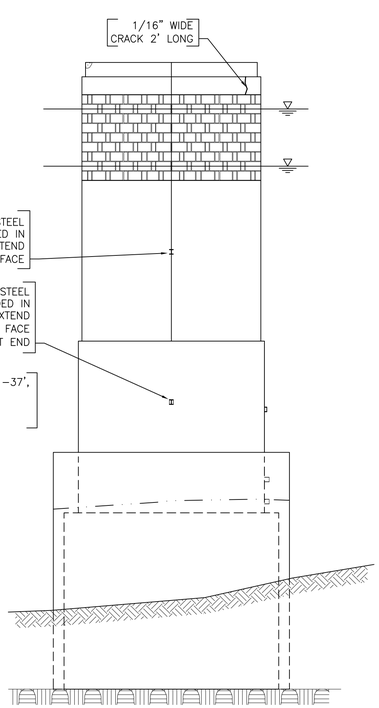

EAST SIDE

PIER 17

SCALE: 1"=10'-0"

DATUM:
MEAN LOW WATER = 0.0'

STATE BRIDGE AUTHORITY
PISCATAQUA RIVER BRIDGE
PORTSMOUTH, N.H. TO KITTERY, ME
PIERS 17 AND 18
BY HARRINGTON AND CORTELYOU
DATED 4/20/39 SHEET NO. 10

CHILDS ENGINEERING CORPORATION
BOX 333 MEDFIELD, MASSACHUSETTS 02052 U.S.A.
Phone: (508) 359-8945 Fax: (508) 359-2751
E-mail: mail@childseng.com

Mark	Description	Date	Appr.

Designed by: CDS	Date: 12/14/11	
Dwn. by: APL	Chk. by: CDS	Design file no. 229311 X-104
Reviewed by: CDS		Scale: 1"=10'-0"

MAINE DEPARTMENT OF TANSPORTATION
SML BRIDGE SUB-STRUCTURE INSPECTION
PORTSMOUTH NH TO KITTERY ME

PIER 17
PLAN AND ELEVATIONS

Sheet reference number:
X-104
Sheet 4 of 7

TOM QUINN K:\2293-11.00 SML BRIDGE INSPECTION\CADD\CURRENT WORKING DWGS\229311 X-104 PIER 17.DWG Dec 14, 2011 - 1:13pm

LEGEND

- CONDITION NOTES
- MUDLINE
- MUDLINE INSIDE SHEET PILE COFFERDAM
- AVERAGE ROCK ELEVATION
- CRACK

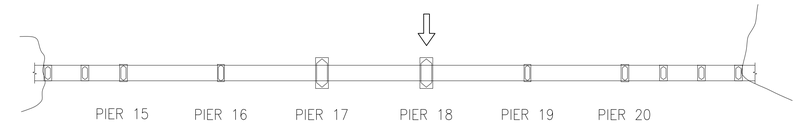

KEY PLAN

SCALE: NONE

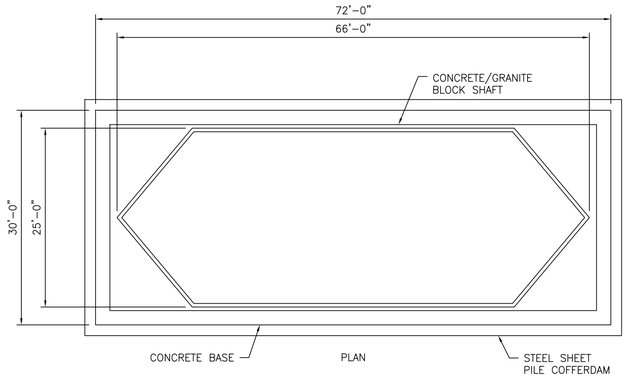

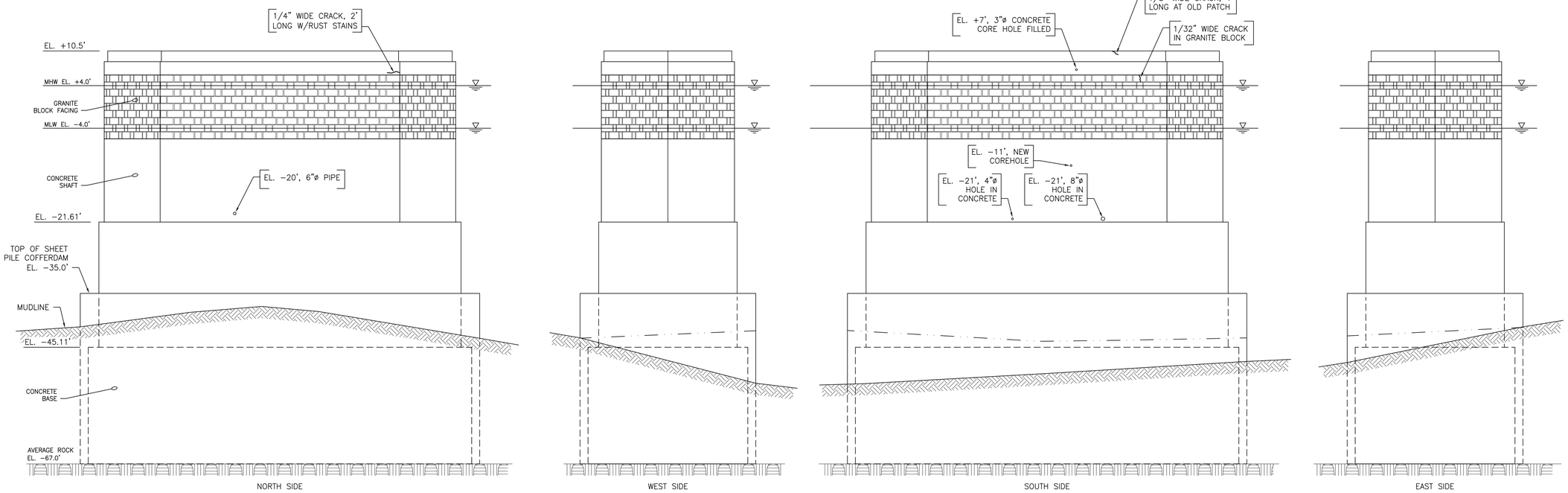

PIER 18

SCALE: 1"=10'-0"

DATUM:
MEAN LOW WATER = 0.0'

REFERENCED FROM:
P.W.A. PROJECT NO. N.H. 1037-F, MAINE 1088-F
MAINE – NEW HAMPSHIRE INTERSTATE BRIDGE AUTHORITY
PISCATAQUA RIVER BRIDGE
PORTSMOUTH, N.H. TO KITTERY, ME
PIERS 17 AND 18
BY HARRINGTON AND CORTELYOU
DATED 4/20/39 SHEET NO. 10

CHILDS ENGINEERING CORPORATION
BOX 333 MEDFIELD, MASSACHUSETTS 02052 U.S.A.
Phone: (508) 359-8945 Fax: (508) 359-2751
E-mail: mail@childseng.com

Mark	Description	Date	Appr.

Date: 12/14/11
Design file no. 229311 X-105
Scale: 1"=10'-0"
Designed by: CDS
Det. by: CDS
Det. by: APL
Reviewed by: CDS

MAINE DEPARTMENT OF TANSPORATION
SML BRIDGE SUB-STRUCTURE INSPECTION
PORTSMOUNTH NH TO KITTERY ME

PIER 18
PLAN AND ELEVATIONS

Sheet reference number:
X-105
Sheet 5 of 7

TOM QUINN K:\2293-11.00 SML BRIDGE INSPECTION\CADD\CURRENT WORKING DWGS\229311 X-105 PIER 18.DWG Dec 19, 2011 - 8:25am

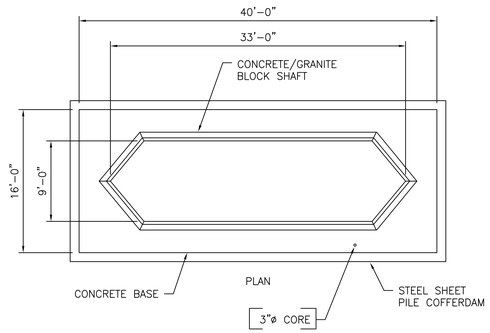

LEGEND

- CONDITION NOTES
- MUDLINE
- MUDLINE INSIDE SHEET PILE COFFERDAM
- AVERAGE ROCK ELEVATION
- CRACK
- AREA OF SPALLED CONCRETE
- AREA OF HONEYCOMBED CONCRETE

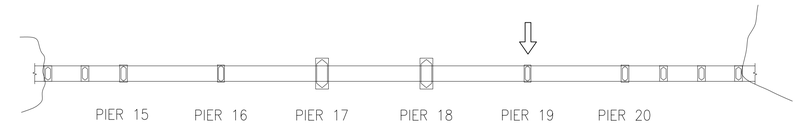

KEY PLAN

SCALE: NONE

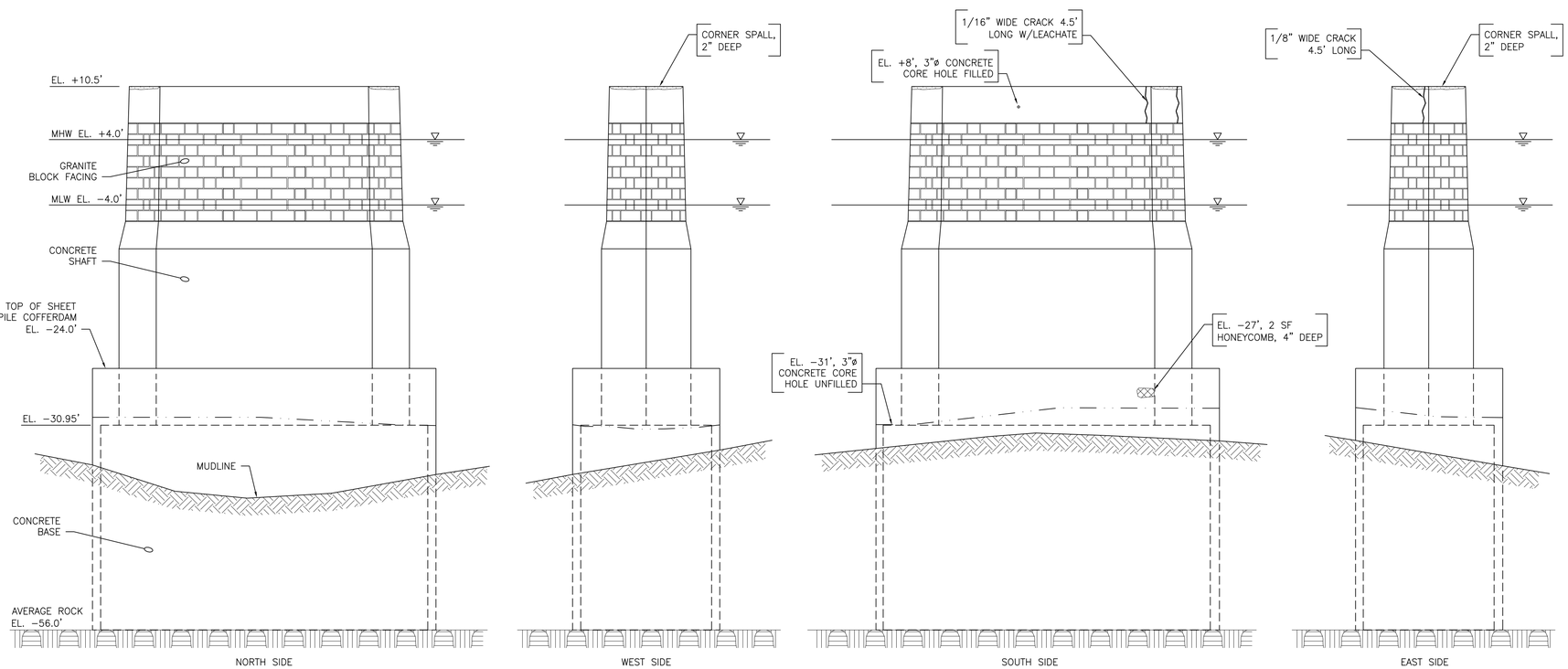

PIER 19

SCALE: 1/8"=1'-0"

DATUM:
MEAN LOW WATER = 0.0'

REFERENCED FROM:
P.W.A. PROJECT NO. N.H. 1037-F, MAINE 1088-F
MAINE – NEW HAMPSHIRE INTERSTATE BRIDGE AUTHORITY
PISCATAQUA RIVER BRIDGE
PORTSMOUTH, N.H. TO KITTERY, ME
PIERS 16 AND 19
BY HARRINGTON AND CORTELYOU
DATED 4/20/39 SHEET NO. 9

CHILDS ENGINEERING CORPORATION
BOX 333 MEDFIELD, MASSACHUSETTS 02052 U.S.A.
Phone: (508) 359-8945 Fax: (508) 359-2751
E-mail: mail@childseng.com

Mark	Description	Date	Appr.

Designed by: CDS	Date: 12/14/11		
Dwn by: APL	Ckd by: CDS	Design file no. 229311 X-106	Scale: 1/8"=1'-0"
Reviewed by: CDS			

MAINE DEPARTMENT OF TANSPORTATION
SML BRIDGE SUB-STRUCTURE INSPECTION
PORTSMOUNTH NH TO KITTERY ME

PIER 19
PLAN AND ELEVATIONS

Sheet reference number:
X-106
Sheet 6 of 7

TOM QUINN K:\2293-11.00 SML BRIDGE INSPECTION\CADD\CURRENT WORKING DWGS\229311 X-106 PIER 19.DWG Dec 14, 2011 - 1:53pm

LEGEND

- CONDITION NOTES
- MUDLINE
- AVERAGE ROCK ELEVATION
- CRACK
- AREA OF SPALLED CONCRETE

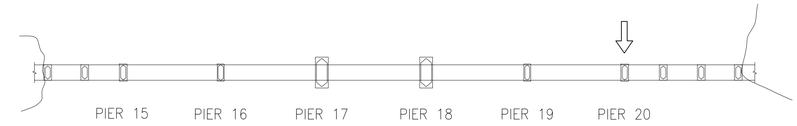

KEY PLAN

SCALE: NONE

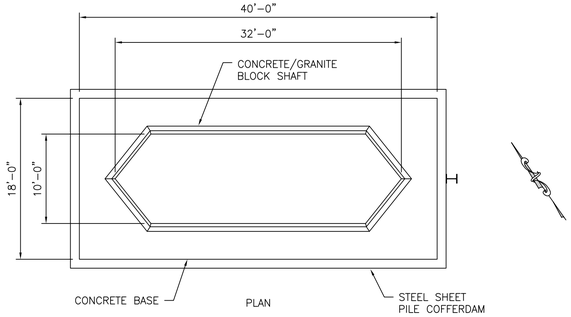

PLAN

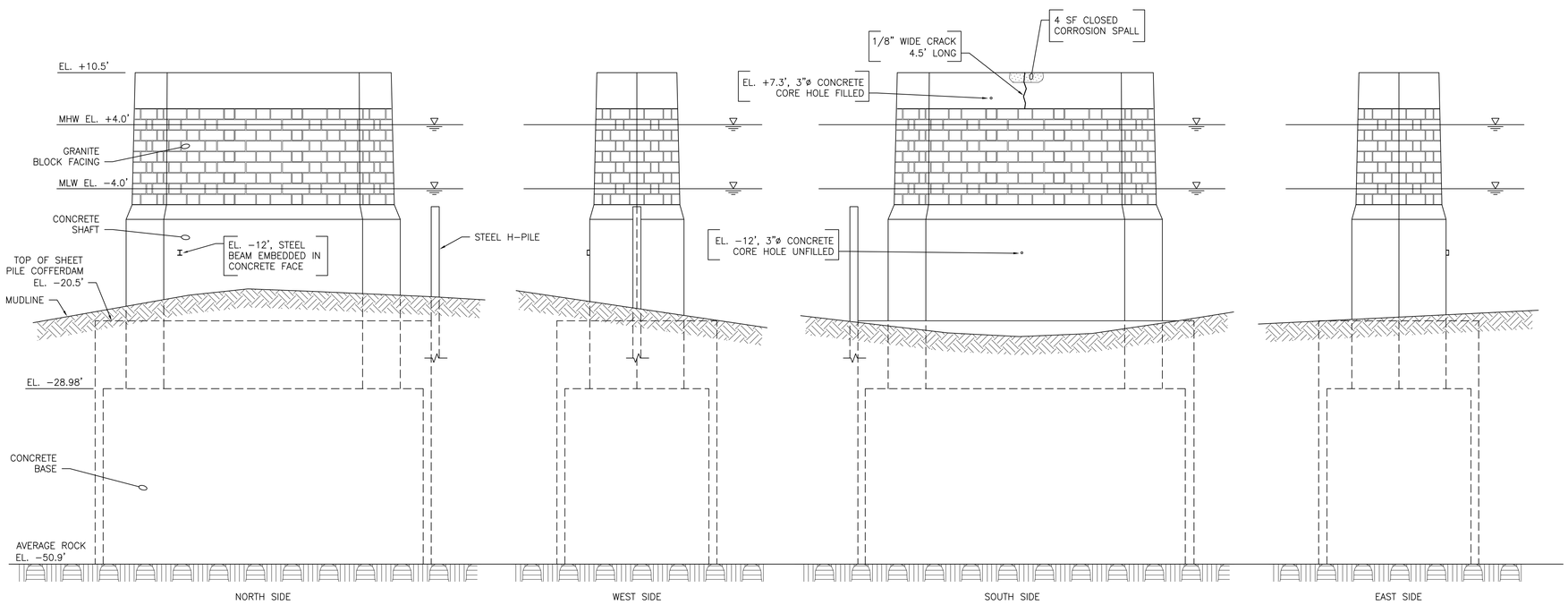

PIER 20

SCALE: 1/8"=1'-0"

DATUM:
MEAN LOW WATER = 0.0'

REFERENCED FROM:
P.W.A. PROJECT NO. N.H. 1037-F, MAINE 1088-F
MAINE – NEW HAMPSHIRE INTERSTATE BRIDGE AUTHORITY
PISCATAQUA RIVER BRIDGE
PORTSMOUTH, N.H. TO KITTERY, ME
PIERS 15 AND 20
BY HARRINGTON AND CORTELYOU
DATED 4/20/39 SHEET NO. 8

CHILDS ENGINEERING CORPORATION
BOX 333 MEDFIELD, MASSACHUSETTS 02052 U.S.A.
Phone: (508) 359-8945 Fax: (508) 359-2751
E-mail: mail@childseng.com

Mark	Description	Date	Appr.

Designed by: CDS
Date: 12/14/11
Dwn by: APL
Ckd by: CDS
Design file no. 229311 X-107
Reviewed by: CDS
Scale: 1/8"=1'-0"

MAINE DEPARTMENT OF TANSPORTATION
SML BRIDGE SUB-STRUCTURE INSPECTION
PORTSMOUTH NH TO KITTERY ME

PIER 20
PLAN AND ELEVATIONS

Sheet reference number:
X-107
Sheet 7 of 7

TOM QUINN K:\2293-11.00 SML BRIDGE INSPECTION\CADD\CURRENT WORKING DWGS\229311 X-107 PIER 20.DWG Dec 14, 2011 - 2:13pm

APPENDIX A

PHOTOGRAPHS

Photo 1 Pier 20, south face – Typical construction of piers. Top of pier is at EL +10.5' MLW. Top of granite facing is at EL +6' MLW.

Photo 2 Pier 15, east face – Six inch deep spall with exposed reinforcing steel between elevations +6' and +10.5' MLW.

Photo 3 Pier 15, southwest face – Six inch deep spall with exposed reinforcing steel between elevations +6’ and +10.5’ MLW.

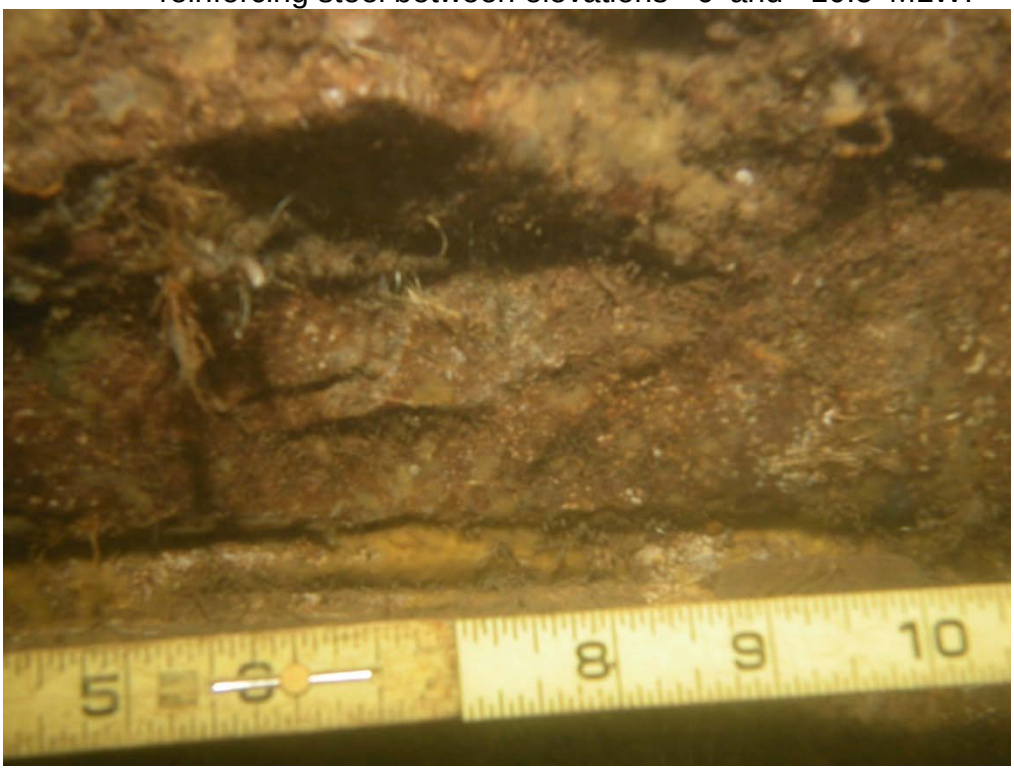

Photo 4 Pier 15, south face, 8 feet from west end – Joint between concrete and bottom course of granite facing.

Photo 5 Pier 16, north face – Overview of granite facing. Granite blocks and lead wool pointing remain in good condition.

Photo 6 Pier 16, north face at the west end – Typical condition of lead wool pointing.

Photo 7 Pier 16, southwest face – 3 inch deep spall at top of concrete.

Photo 8 Pier 17, south face, fifth course from top – Vertical joint in good condition.

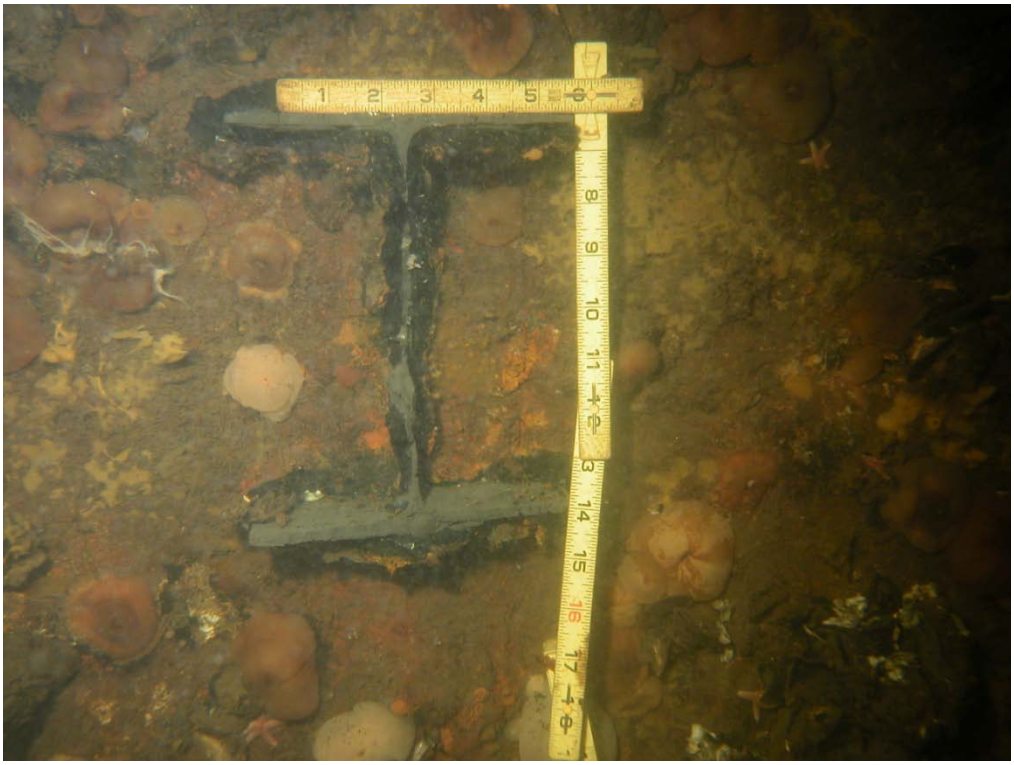

Photo 9 Pier 17, south face, EL -17’ MLW – Steel beam embedded in concrete.

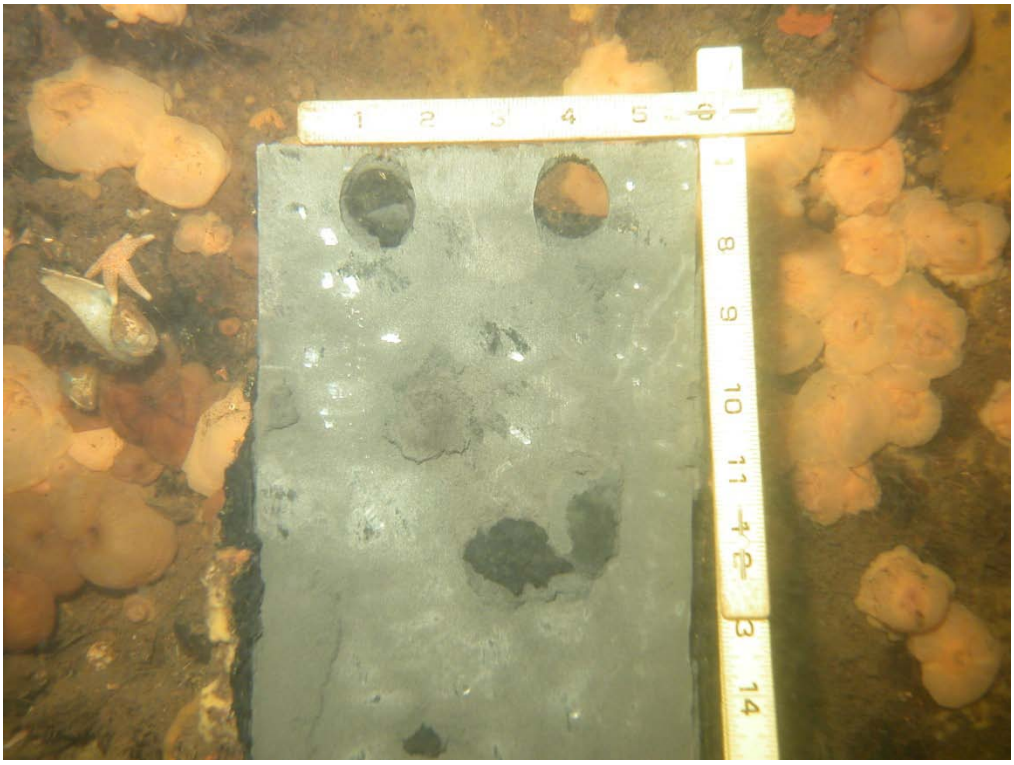

Photo 10 Pier 17, east face, EL -37’ MLW – Steel beam with plate at end embedded in concrete.

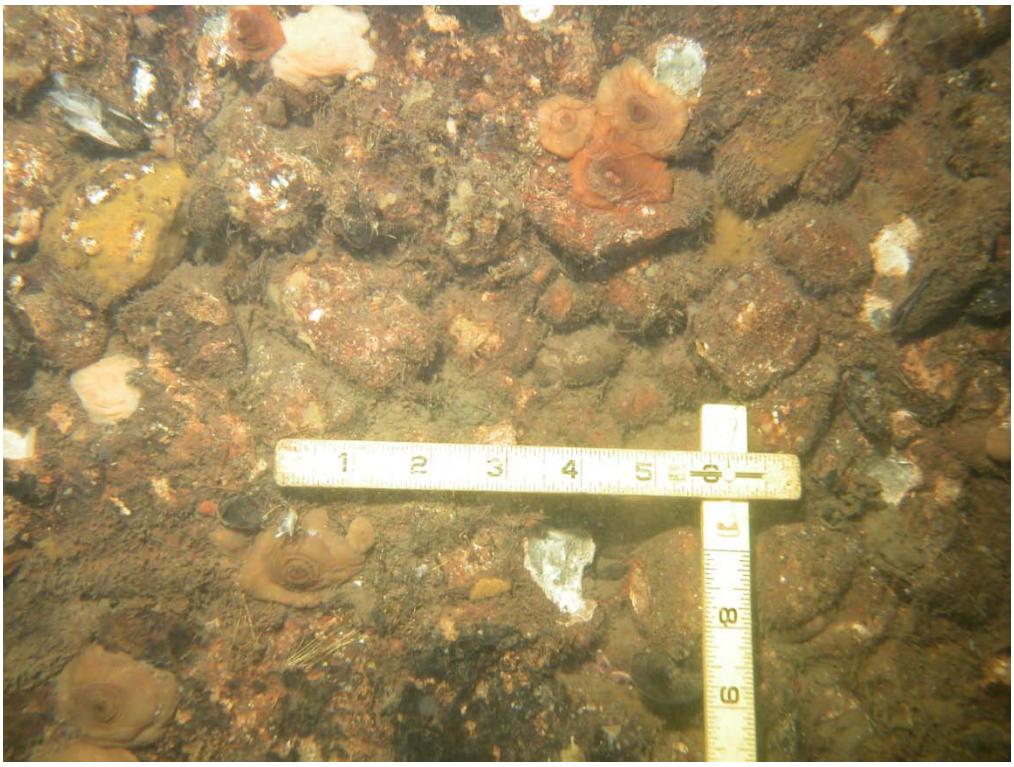

Photo 11 Pier 17, south face, EL -41' MLW – 3 inch deep honeycomb, but concrete remains hard.

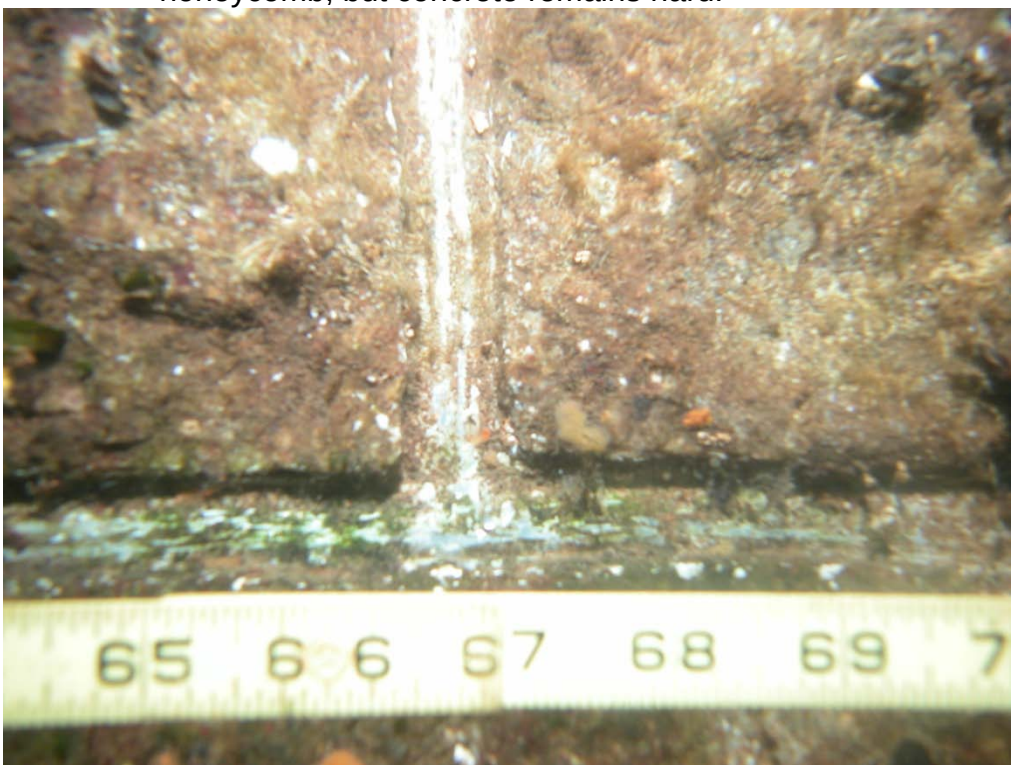

Photo 12 Pier 18, north face, 8 feet from northeast corner – Lead wool pointing between bottom course and concrete remains in good condition.

Photo 13 Pier 18, south face, east end, top course – Crack in granite block.

Photo 14 Pier 19, southeast face – Concrete spalls and cracks with white leachate.

Photo 15 Pier 20, north face, east end – Typical condition of lead wool pointing.

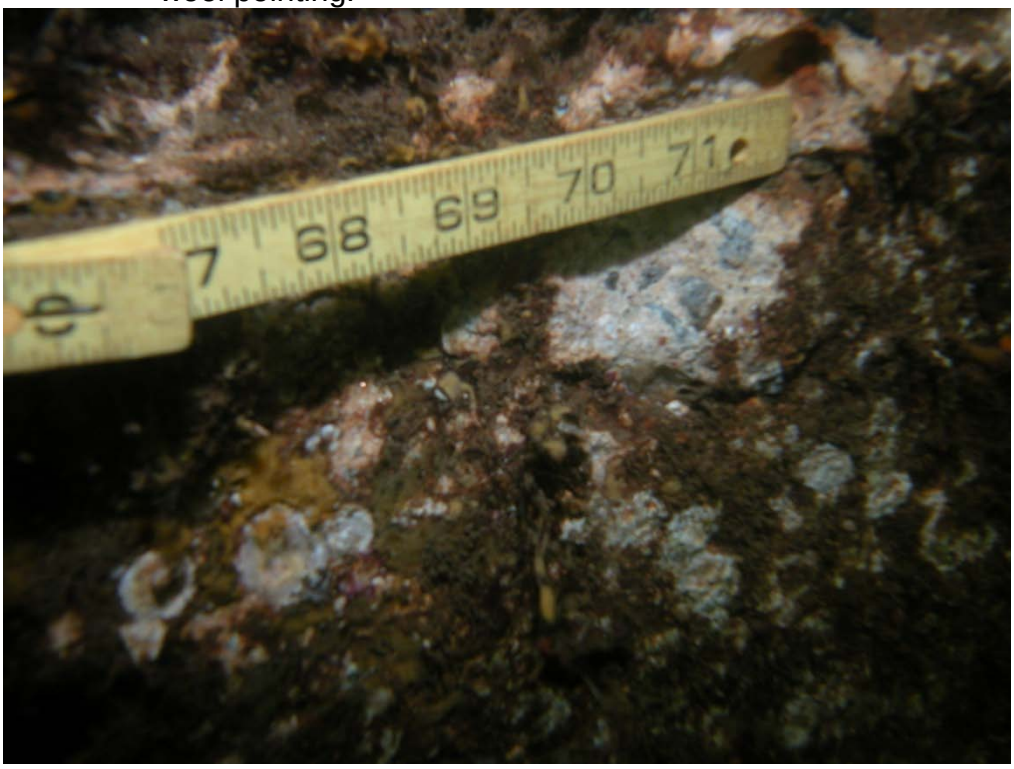

Photo 16 Pier 20, northeast corner, elevation -12’ MLW – Maximum concrete softness is 3/8”.

APPENDIX B

UNDERWATER INSPECTION REPORTS

UNDERWATER INSPECTION

460 SUBSTRUCTURE COND. / 461 CHANNEL COND.

N	NOT APPLICABLE
9	EXCELLENT CONDITION – New
8	VERY GOOD CONDITION – No problems noted
7	GOOD CONIDITON – some minor problems
6	SATISFACTORY CONDITION – Minor deterioration: Surface scaling of concrete; surface rust, no pitting of steel. Minor localized scour in scour resistant soil.
5	FAIR CONDITION – Minor section loss, hairline cracking, spalling or scour. No repairs needed now.
4	POOR CONDITION – Advanced section loss, deterioration, spalling or scour. Repairs needed to prevent possible failure. No undermining.
3	SERIOUS CONDITION – Large loss of section, deterioration, spalling or scour. Local failures are possible. Bridge undermined.
2	CRITICAL CONDITION – Advanced deterioration with potential for settlement or failure. Scour may have removed substructure support.
1	"IMMINENT" FAILURE CONDITION – Major deterioration, section loss or scour or obvious vertical or horizontal movement affecting structure stability. Bridge closed.
0	FAILED CONDITION – Bridge closed, beyond corrective action.

493	EQUIP/ADD INSP	697	SHAFT TYPE	698	FOUNDATION TYPE
0	None needed				
1	Full face mask	1	Mass Conc.	1	Piles
2	Boat	2	Full Ht. Reinf. Conc.	2	Ledge
3	Ladder	3	Stub Conc. Abut.	3	Gravel Base
4	Rope	4	Open Concrete	4	Concrete Slab
5		5	Stone Masonry	5	Grillage
6	Sounding (profiles, fathometer, etc.)	6	Timber Piles	6	
7		7	Timber	7	
8	Scour Evaluation	8	Steel Bent	8	
9	Other	9	Other	9	Other
		N	Not Applicable	N	Not Appilcable

685 & 686 RECOMMENDED REPAIRS

20	ABUTMENTS	21	PIERS	40	CHANNEL
1	Replace	1	Replace	1	Rep Riprap
2	Rehabilitation	2	Rehabilitation	2	Clean Chan.
3	Rep. Br. Seats	3	Rep. Br. Seats	3	Remove Debris
4	Repair Conc.	4	Repl. Piles	4	Repair Scour
5	Rep. Timber	5	Rep. Brac./Fen.	5	Rep. Slope Paving
6	Rep. Wing/Ret. W	6	Repair Steel	6	Rep. Nav. Lig.
7	Rep. Und. W. El.	7	Rep. Und. Wat. El.	7	
8	Rep. Undermining	8	Rep. Undermining	8	
9	Other	9	Other	9	Other

WORK-PRIORITY

1-3	Critical
4-6	Recommended
7-9	Desired
N	Not Applicable

WORK-EFFORT

1-3	Major (>6 weeks)
4-6	Rehabiliation (1-6 weeks)
7-9	Routine (<1 week)
N	Not Applicable

UNDERWATER INSPECTION REPORT

TOWN (S)Portsmouth, NH to Kittery, ME

BR NAME Sarah Mildred Long Bridge Pier 15

		BRIDGE NO.	
193	1 0 3 1 1 1	DATE	
493	1 2	EQUIP/ADD. INSP	
460	5	SUBST. COND.	
461	8	CHAN. COND.	
697	2	SHAFT TYPE	
698	2	FOUNDATION	

RECOM. REPAIRS

685	2	1	2	5	5
686					

TEAM LEADER Fred Radcliffe

DIVERS Phil Iantosca, Bob Welch, Nic Sarata

TIME: ENTRY 10:35

EXIT 11:35

WEATHER Sunny, 50 deg. F

WATER TEMP 50 deg. F

MAX DEPTH 30 FT

VISIBILITY 5 FT

CURRENT Tidal-1 knot

INSP. SIGN

STREAMBED DESC. Dense silt, gravel, cobbles.

COMMENTS/PROBLEMS/HAZARDS

INSPECTION REPORT Granite blocks and pointing remain in very good condition. Concrete softness 1/8" max. Spalls with exposed reinforcing steel observed above the waterline. Steel sheetpile cofferdam remains in place. No evidence of scour observed.

UNDERWATER INSPECTION REPORT

TOWN (S)Portsmouth, NH to Kittery, ME

BR NAME Sarah Mildred Long Bridge Pier 16

		BRIDGE NO.	TEAM LEADER Fred Radcliffe
193	1 1 0 1 1 1	DATE	DIVERS Phil Iantosca, Bob Welch, Nic Sarata
493	1 2	EQUIP/ADD. INSP	TIME: ENTRY 11:40
460	6	SUBST. COND.	EXIT 12:35
461	8	CHAN. COND.	WEATHER Fair, 50 def. F
697	2	SHAFT TYPE	WATER TEMP 50 deg. F
698	2	FOUNDATION	MAX DEPTH 60 FT
	RECOM. REPAIRS		VISIBILITY 8 FT
685	2 1 2 7 6		CURRENT Tidal-1 knot
686			INSP. SIGN

STREAMBED DESC. Dense silt, gravel, cobbles.

COMMENTS/PROBLEMS/HAZARDS

INSPECTION REPORT Granite blocks and pointing remain in very good condition. Concrete softness 3/8" max. Minor cracks and spalls observed above the granite facia. Steel sheetpile cofferdams remain in place. No evidence of scour observed.

UNDERWATER INSPECTION REPORT

TOWN (S)Portsmouth, NH to Kittery, ME

BR NAME Sarah Mildred Long Bridge Pier 17

		BRIDGE NO.	
193	1 1 0 3 1 1	DATE	
493	1 2	EQUIP/ADD. INSP	
460	6	SUBST. COND.	
461	8	CHAN. COND.	
697	2	SHAFT TYPE	
698	2	FOUNDATION	

RECOM. REPAIRS

685	2	1	2	7	6
686					

TEAM LEADER Fred Radcliffe

DIVERS Phil Iantosca, Bob Welch, Nic Sarata

TIME: ENTRY 8:15 13:40

EXIT 9:30 14:35

WEATHER Sunny, 50 deg. F

WATER TEMP 50 deg. F

MAX DEPTH 65 FT

VISIBILITY 4 FT

CURRENT Tidal-1 knot

INSP. SIGN

STREAMBED DESC. Dense silt, gravel, cobbles. Pile of granite blocks observed on mudline west of cofferdam.

COMMENTS/PROBLEMS/HAZARDS

INSPECTION REPORT Granite blocks and pointing remain in very good condition. Concrete softness 1/4" max. Minor cracks and spalls observed above the granite facia, and minor honeycombing observed below the waterline. Steel sheetpile cofferdam remains in place. No evidence of scour observed.

UNDERWATER INSPECTION REPORT

TOWN (S)Portsmouth, NH to Kittery, ME

BR NAME Sarah Mildred Long Bridge Pier 18

		BRIDGE NO.	
193	1 1 0 4 1 1	DATE	
493	1 2	EQUIP/ADD. INSP	
460	6	SUBST. COND.	
461	8	CHAN. COND.	
697	2	SHAFT TYPE	
698	2	FOUNDATION	

RECOM. REPAIRS

685	2	1	2	7	6
686					

TEAM LEADER Fred Radcliffe

DIVERS Phil Iantosca, Bob Welch, Nic Sarata

TIME: ENTRY 8:30 14:50

EXIT 9:20 15:28

WEATHER Sunny, 55 deg. F

WATER TEMP 50 deg. F

MAX DEPTH 55 FT

VISIBILITY 10 FT

CURRENT Tidal-1 knot

INSP. SIGN

STREAMBED DESC. Dense silt, gravel, cobbles.

COMMENTS/PROBLEMS/HAZARDS

INSPECTION REPORT Granite blocks and pointing remain in very good condition, vertical crack observed in one block. Concrete softness 1/8" max. Minor cracks observed above the granite facia. Steel sheetpile cofferdam remains in place. No evidence of scour observed.

UNDERWATER INSPECTION REPORT

TOWN (S)Portsmouth, NH to Kittery, ME

BR NAME Sarah Mildred Long Bridge Pier 19

		BRIDGE NO.	TEAM LEADER Fred Radcliffe
193	1 1 0 2 1 1	DATE	DIVERS Phil Iantosca, Bob Welch, Nic Sarata
493	1 2	EQUIP/ADD. INSP	TIME: ENTRY 12:46
460	6	SUBST. COND.	EXIT 13:48
461	8	CHAN. COND.	WEATHER Sunny, 50 deg. F
697	2	SHAFT TYPE	WATER TEMP 48 deg. F
698	2	FOUNDATION	MAX DEPTH 40 FT
	RECOM. REPAIRS		VISIBILITY 10 FT
685	2 1 2 7 6		CURRENT Tidal-1 knot
686			INSP. SIGN

STREAMBED DESC. Dense silt, gravel, cobbles.

COMMENTS/PROBLEMS/HAZARDS

INSPECTION REPORT Granite blocks and pointing remain in very good condition. Concrete softness 3/8" max. Minor cracks and spalls observed above the granite facia, minor honeycombing observed below the waterline. Steel sheetpile cofferdam remains in place, no evidence of scour observed.

UNDERWATER INSPECTION REPORT

TOWN (S)Portsmouth, NH to Kittery, ME

BR NAME Sarah Mildred Long Bridge Pier 20

		BRIDGE NO.	TEAM LEADER Fred Radcliffe
193	1 1 0 2 1 1	DATE	DIVERS Phil Iantosca, Bob Welch, Nic Sarata
493	1 2	EQUIP/ADD. INSP	TIME: ENTRY 7:50
460	6	SUBST. COND.	EXIT 8:25
461	8	CHAN. COND.	WEATHER Sunny, 50 deg. F
697	2	SHAFT TYPE	WATER TEMP 48 deg. F
698	2	FOUNDATION	MAX DEPTH 20 FT
	RECOM. REPAIRS		VISIBILITY 10 FT
685	2 1 2 7 6		CURRENT Tidal-1 knot
686			INSP. SIGN

STREAMBED DESC. Dense silt, gravel, cobbles.

COMMENTS/PROBLEMS/HAZARDS

INSPECTION REPORT Granite blocks and pointing remain in very good condition.
Concrete softness 3/8" max. Minor cracks and spalls observed above the granite facia.
Steel sheetpile cofferdam remains in place, no evidence of scour observed.

APPENDIX C

SIMCO Technologies Report

(Available in January 2012)