New Hampshire Department of Transportation

IN-DEPTH INSPECTION AND CONDITION REPORT FOR THE SARAH MILDRED LONG BRIDGE OVER THE PISCATAQUA RIVER

251/108

December 2009

PREPARED BY:

HDR Engineering, Inc.
695 Atlantic Ave 2FL
Boston, MA 02111

Hoyle, Tanner & Associates, Inc.
150 Dow Street
Manchester, NH 03101

STATE OF NEW HAMPSHIRE
LORETTA GIRARD DOUGHTY
No. 08820
LICENSED PROFESSIONAL ENGINEER

12-21-09

VOLUME 1 OF 2

TABLE OF CONTENTS

VOLUME 1 OF 2

SECTION

LOCATION MAP	1
DESCRIPTION OF BRIDGE	2
BRIDGE ELEVATION	3
BRIDGE ELEVATION – TRUSS SPANS	4
BRIDGE FRAMING PLAN – ROADWAY APPROACH SPANS 1-13	5
BRIDGE FRAMING PLAN – ROADWAY APPROACH SPANS 14, 15 AND 21-27	6
TYPICAL BRIDGE FRAMING PLAN – ROADWAY APPROACH SPANS 1-13, 24-27	7
TYPICAL BRIDGE FRAMING PLAN – ROADWAY APPROACH SPANS 14, 15, 21-23	8
TYPICAL BRIDGE FRAMING PLAN – TRUSS SPANS	9
TYPICAL BRIDGE FRAMING PLAN – TOWER ELEVATION	10
TYPICAL BRIDGE FRAMING PLAN – RAILROAD APPROACH SPANS	11
TYPICAL BRIDGE CROSS SECTION – ROADWAY APPROACH SPANS	12
TYPICAL BRIDGE CROSS SECTION – TRUSS SPANS	13
TYPICAL BRIDGE RAILROAD DECK CROSS SECTION	14
CROSS SECTION – RETRACTABLE RAILROAD APPROACH SPAN 21	15
INSPECTION FINDINGS	16
FRACTURE CRITICAL INSPECTION	35

APPENDIX A – INSPECTION FORMS

APPENDIX B – PHOTOS

APPENDIX C – CONDITION SUMMARY TABLES AND SKETCHES

VOLUME 2 OF 2

REPORTS

PIN INSPECTION TECHNICAL REPORT

UNDERWATER INSPECTION REPORT

CONCRETE CHARACTERIZATION AND CONDITION ASSESSMENT

MECHANICAL AND ELECTRICAL INSPECTION REPORT

LOCATION MAP

N

DESCRIPTION OF BRIDGE

Date of Construction:	**1940**
Original Design Loading:	**H20 Highway Loading – with 1.65 lanes considered per truss.**
	Cooper E-72 Railroad Loading
Bridge Type:	**Tower Driven Vertical Lift Bridge; Comprised of 5 double-deck truss spans and 22 steel girder approach spans of which 5 spans are double-deck. The deck is reinforced concrete for upper level highway and open timber tie deck for lower level railroad.**
Skew:	**0°**
Spans:	**5 truss spans, 22 approach spans for highway level; 5 truss spans, 5 approach spans for railroad**
Width of Highway Bridge Deck:	**30'-0" between curbs for highway**
	10'-0" between ends of timber ties for railroad
Roadway Surface:	**Monolithic concrete**
Sidewalk/Walkway/Median:	**Monolithic concrete**
Bridge Railing:	**Steel pipe rail along sidewalk**
Approach Railing:	**Steel pipe rail along sidewalk**
Superstructure:	**5 double-deck main truss spans with a vertical lift span in center. Stringers supported by floorbeams at truss panel points for both upper and lower decks.**
	15 steel girder south approach spans with 2 spans of double-deck and 7 steel girder north approach spans with 3 spans of double-deck and one retractable span for railroad.
	2 towers adjacent to the lift span. Stringers supported by floorbeams for both upper and lower deck systems.
Modifications to Original Superstructure:	**Lower level railroad span at Span 21 was modified to a retractable span in 1965; Upper level highway deck was repaired and an overlay was placed in 1987; Expansion bearings were modified, operator house was expanded and electrical and maintenance enclosure was added in 1988.**
Utilities:	**Various electric conduits along the structure from both ends of the bridge (for bridge service only).**
Substructure:	**Reinforced concrete piers and abutments with stone masonry fascia in tidal zone and steel pier bents at Piers 13 and 14, and supporting the north approach spans.**
Modifications to Original Substructure:	**None**

BRIDGE ELEVATION

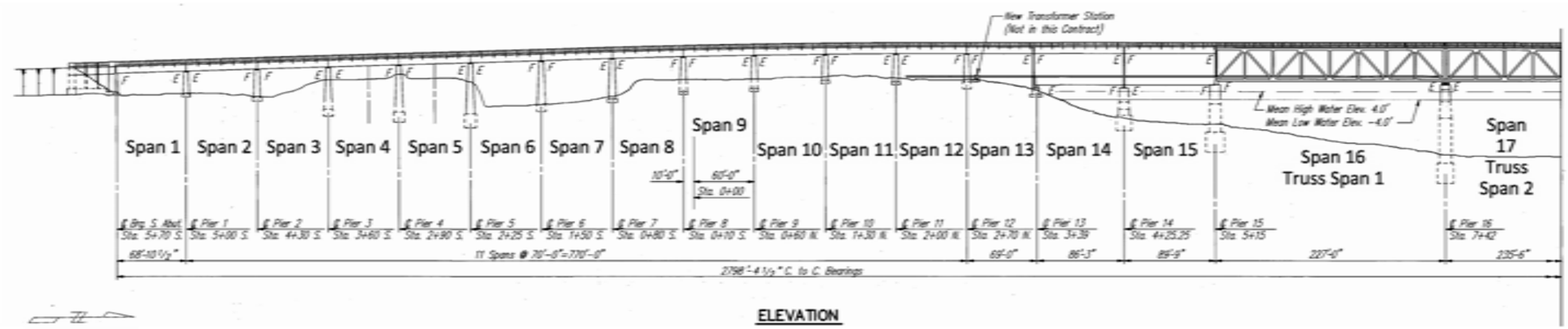

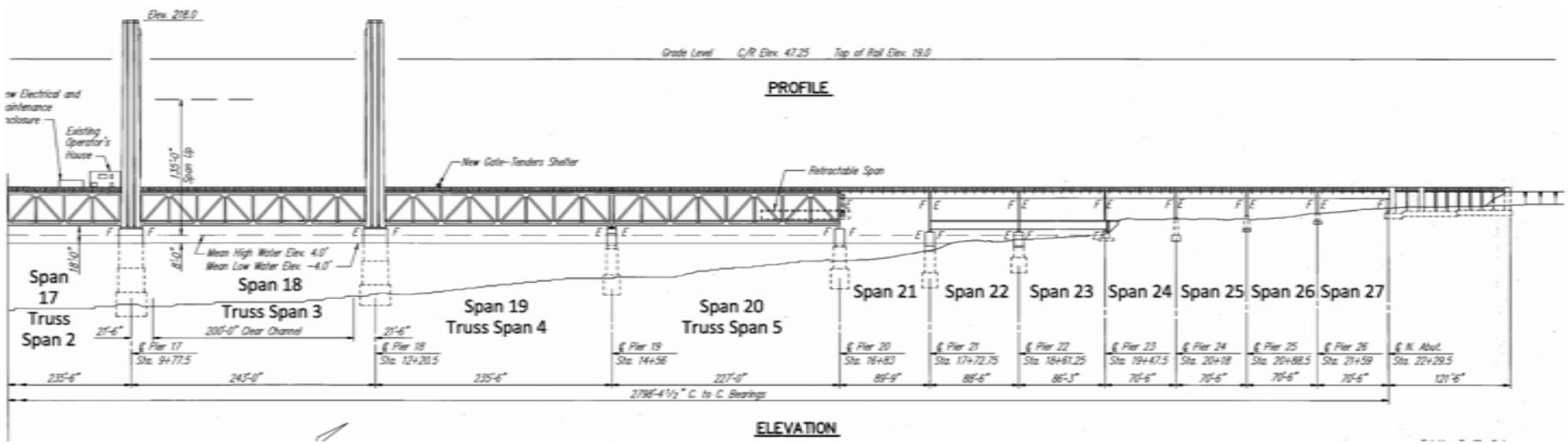

BRIDGE ELEVATION – TRUSS SPANS

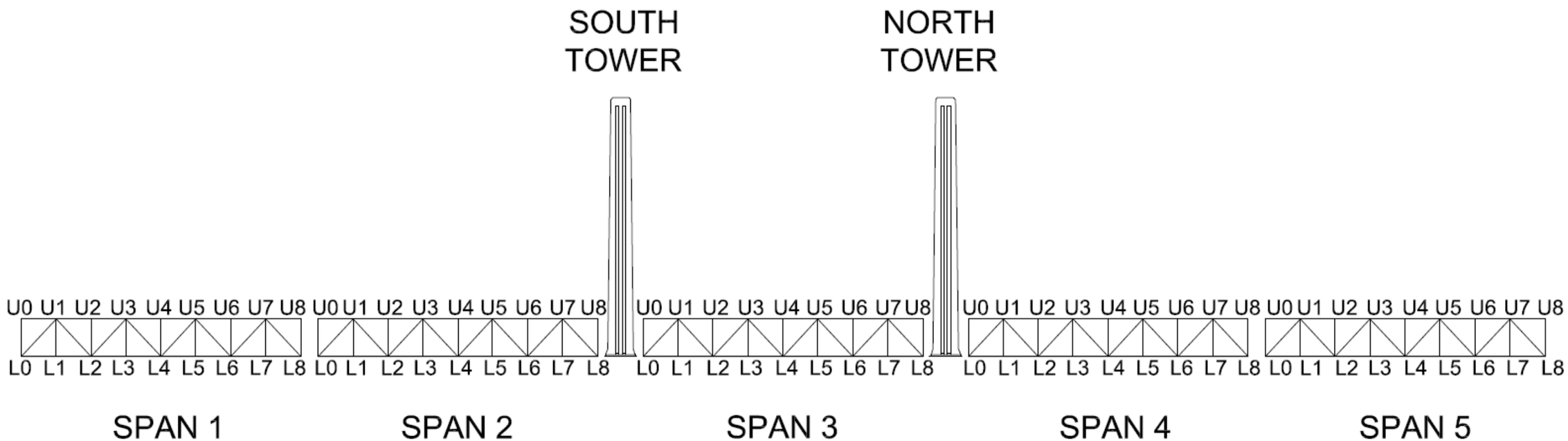

BRIDGE FRAMING PLAN – ROADWAY APPROACH SPANS 1-13

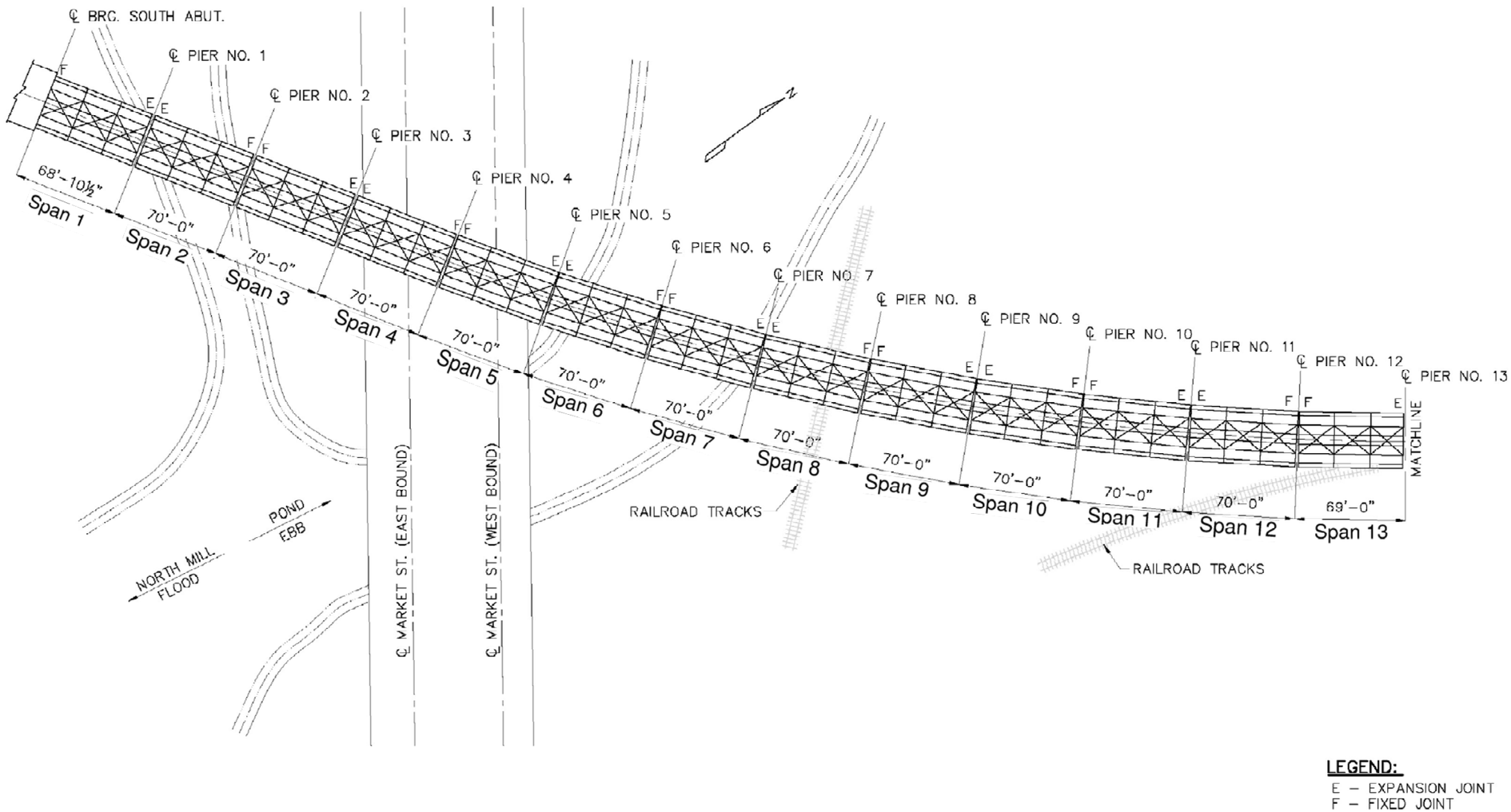

BRIDGE FRAMING PLAN – ROADWAY APPROACH SPANS 14, 15 AND 21-27

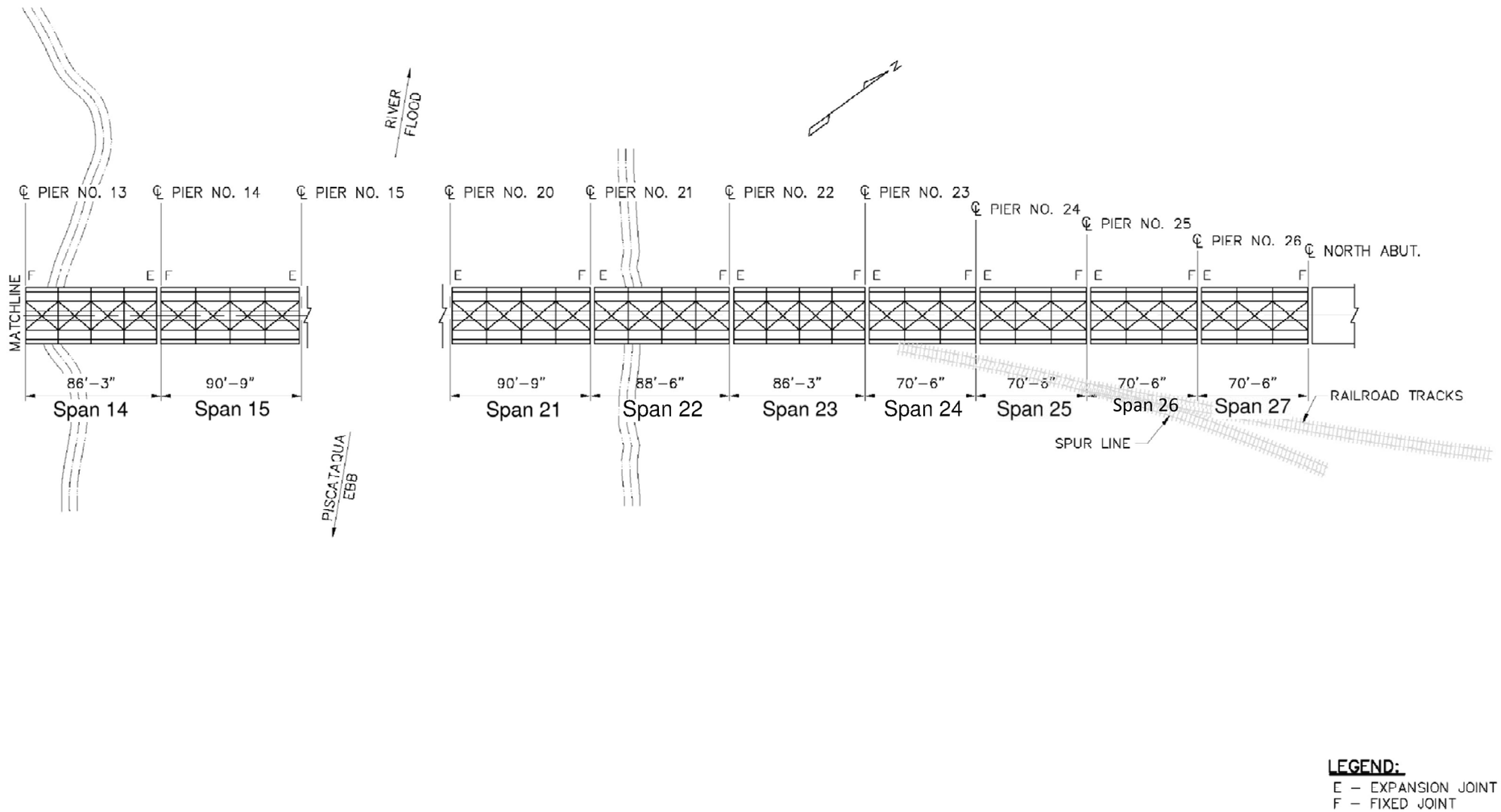

TYPICAL BRIDGE FRAMING PLAN – ROADWAY APPROACH SPANS

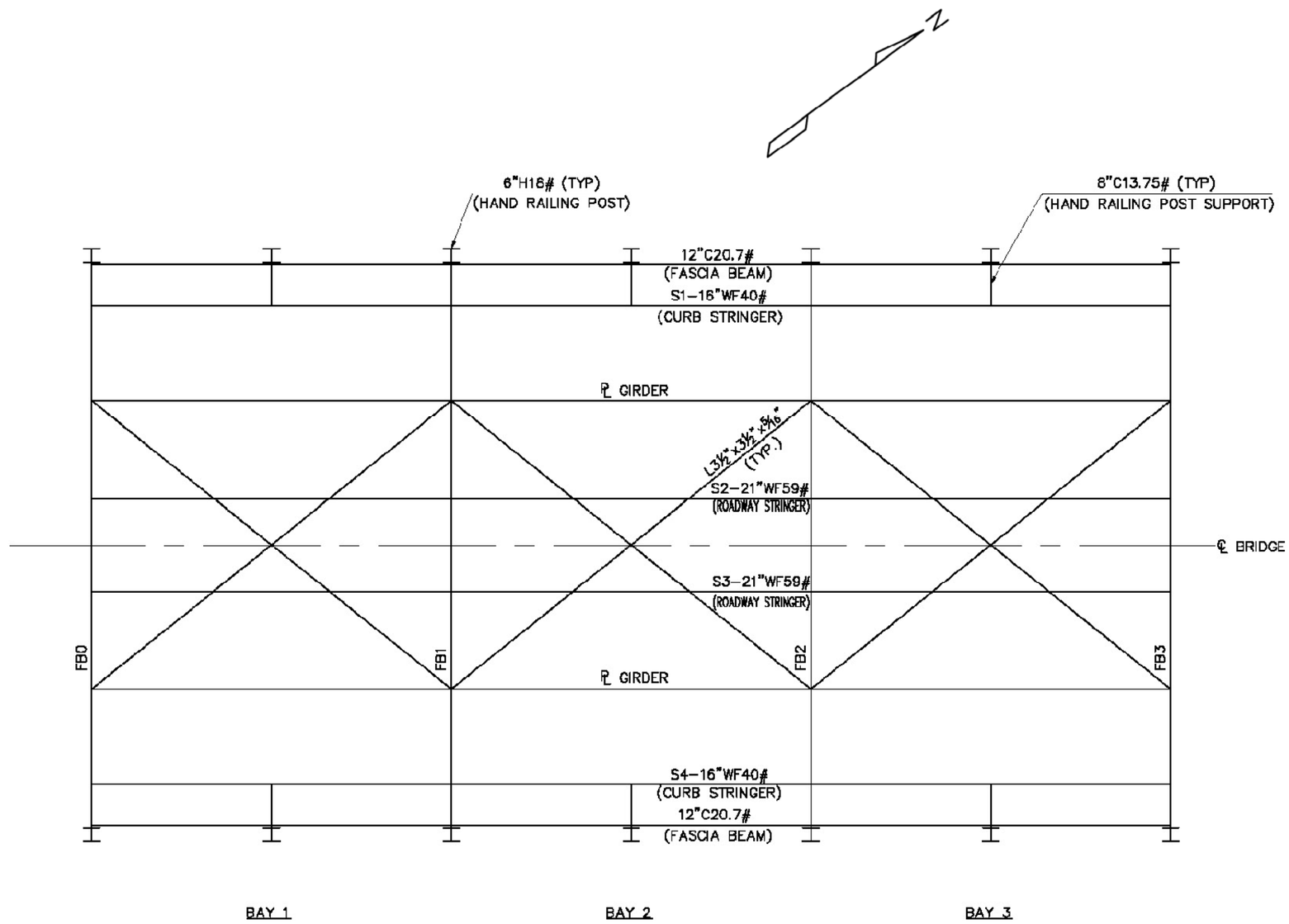

APPROACH SPAN FRAMING PLAN
(SPANS 1–13, 24–27)

TYPICAL BRIDGE FRAMING PLAN –ROADWAY APPROACH SPANS

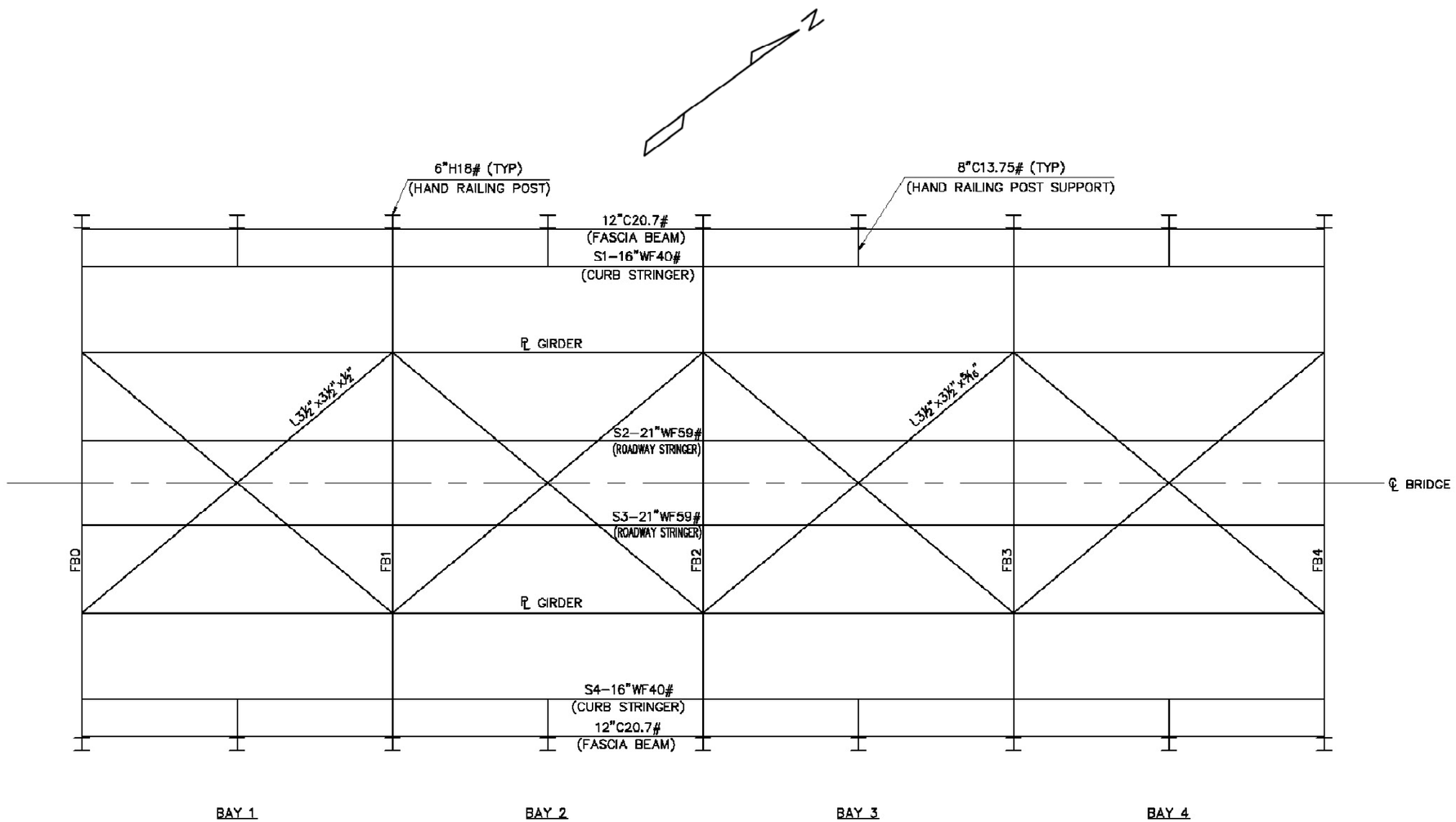

APPROACH SPAN FRAMING PLAN
(SPANS 14, 15, 21–23)

TYPICAL BRIDGE FRAMING PLAN – TRUSS SPANS

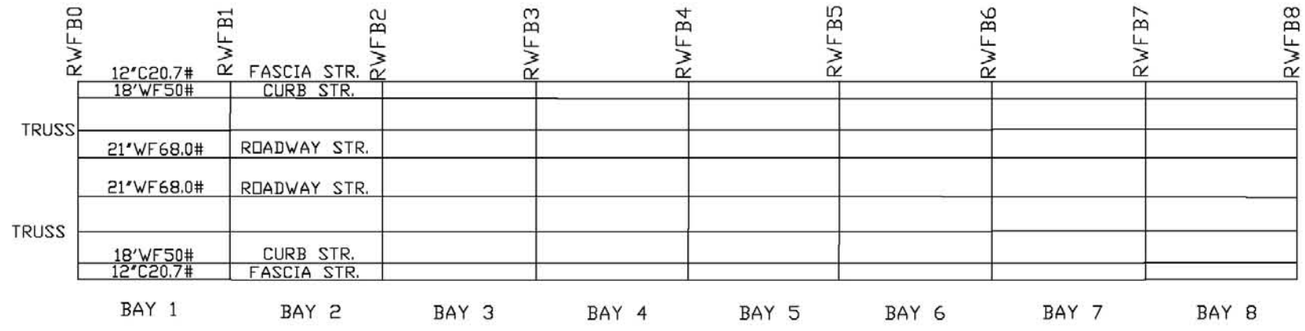

TOP DECK FLOOR SYSTEM

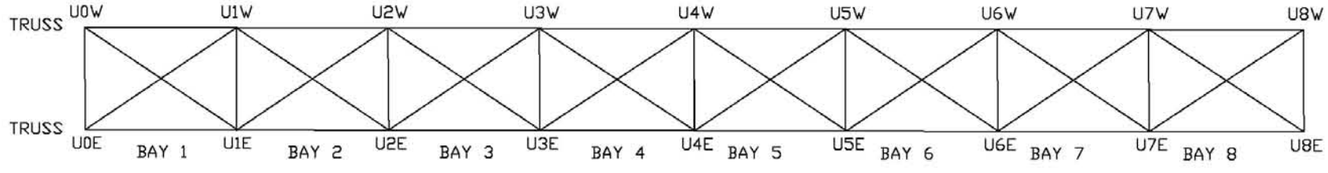

TOP LATERAL BRACING SYSTEM

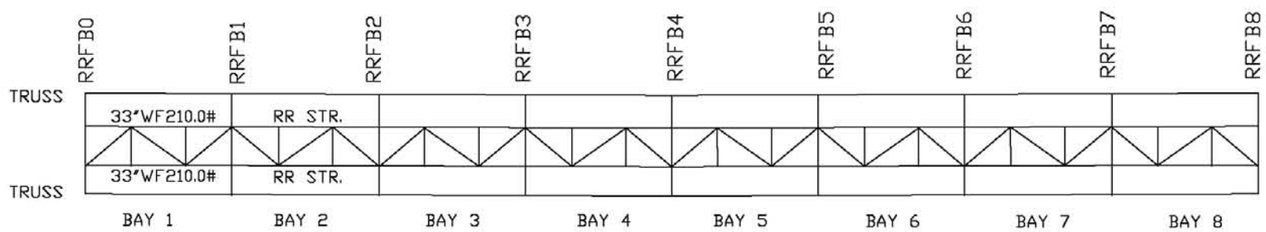

BOTTOM DECK FLOOR SYSTEM

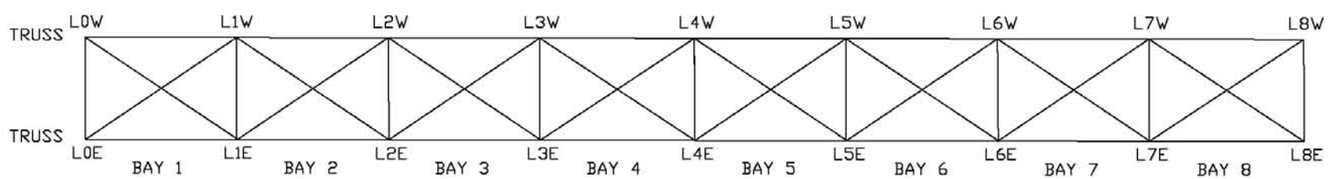

BOTTOM LATERAL BRACING SYSTEM

Legend:

RRFB – Railroad Floorbeam

RWFB – Roadway Floorbeam

STR. – Stringer

RR - Railroad

TYPICAL BRIDGE FRAMING PLAN – TOWER ELEVATION

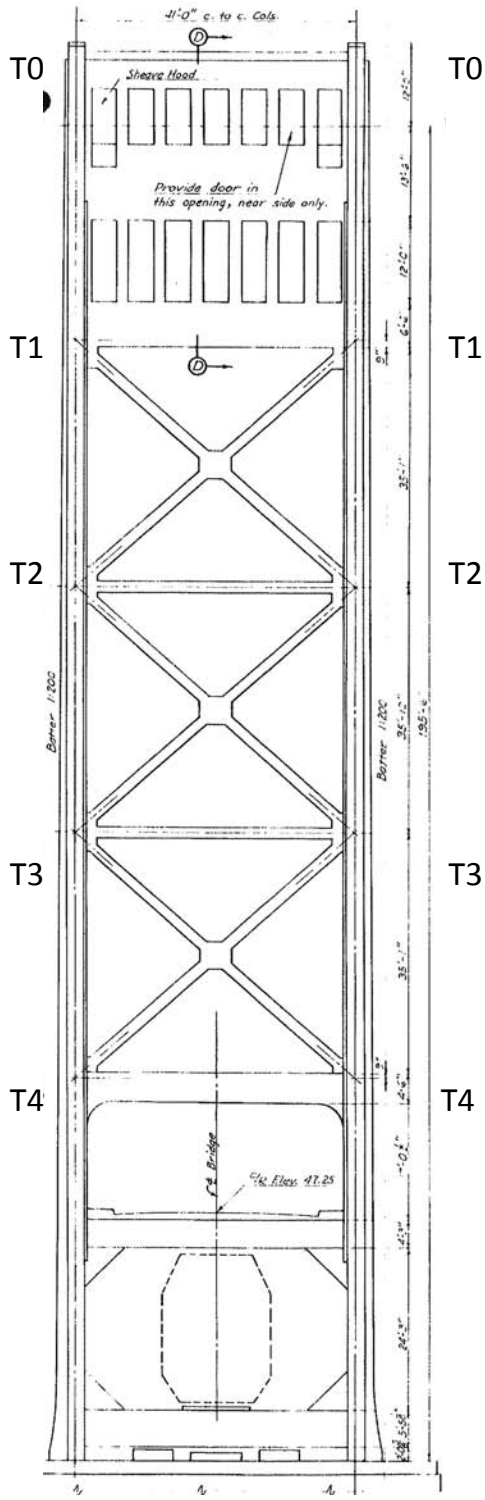

TYPICAL BRIDGE FRAMING PLAN – RAILROAD APPROACH SPANS

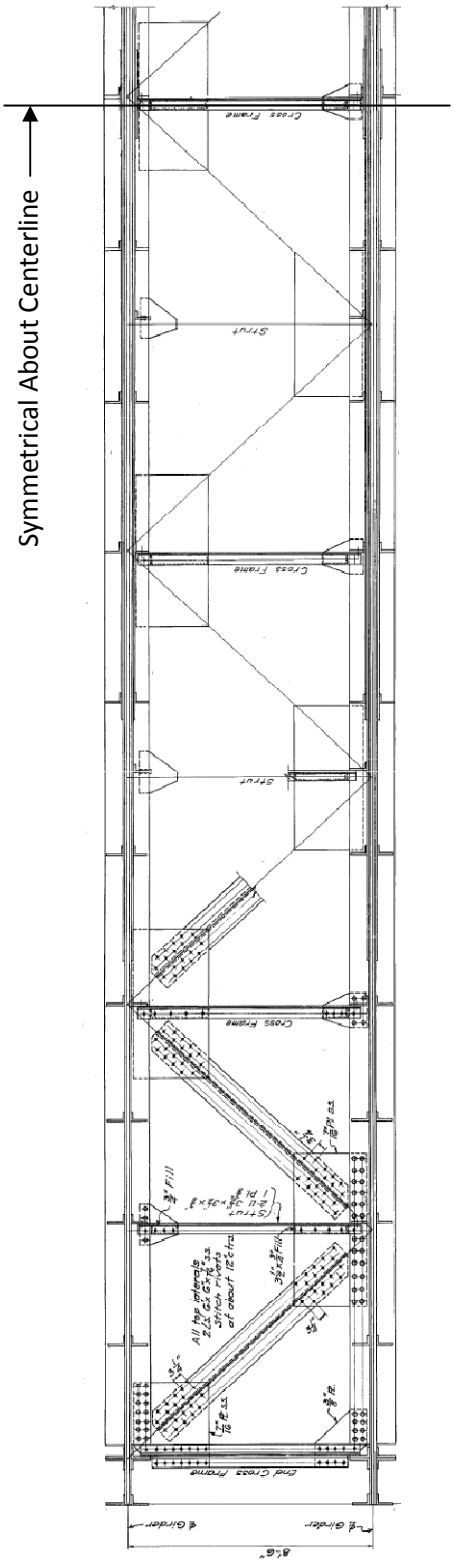

TYPICAL BRIDGE CROSS SECTION – ROADWAY APPROACH SPANS

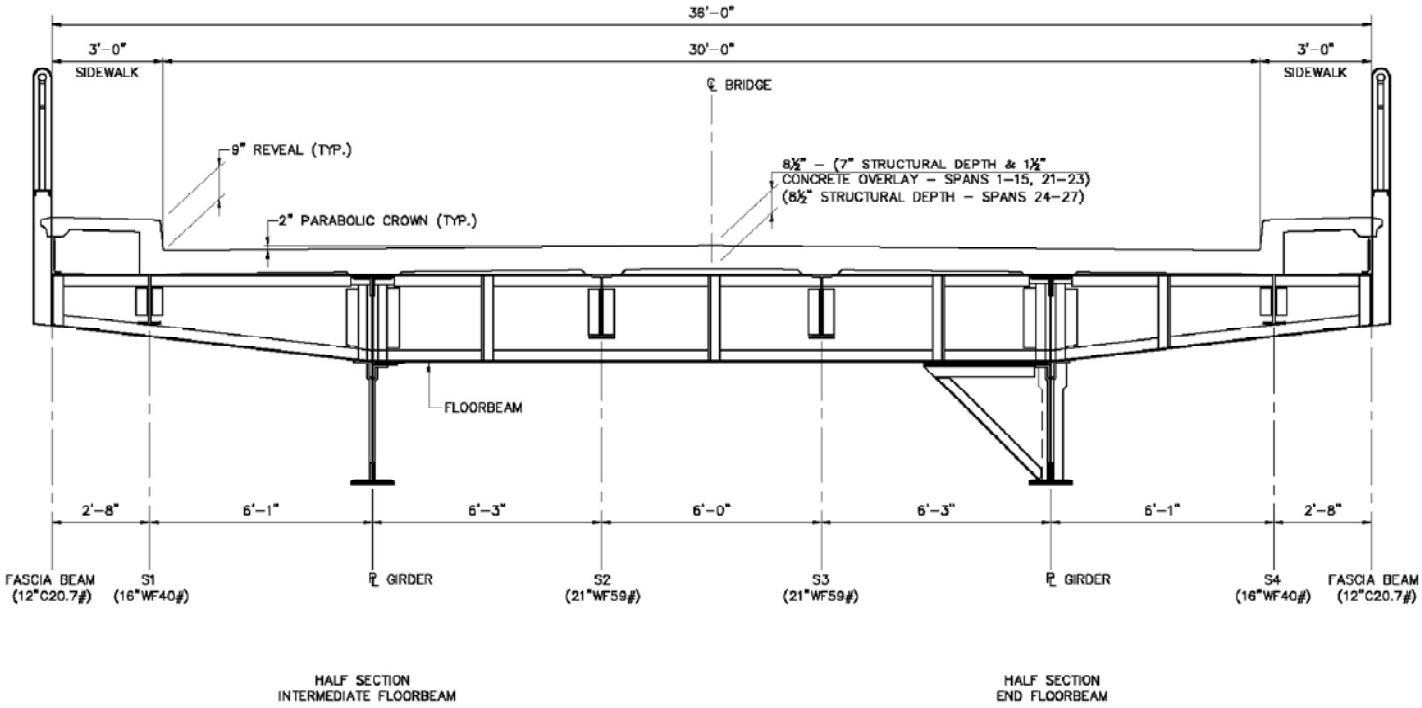

TYPICAL BRIDGE CROSS SECTION – TRUSS SPANS

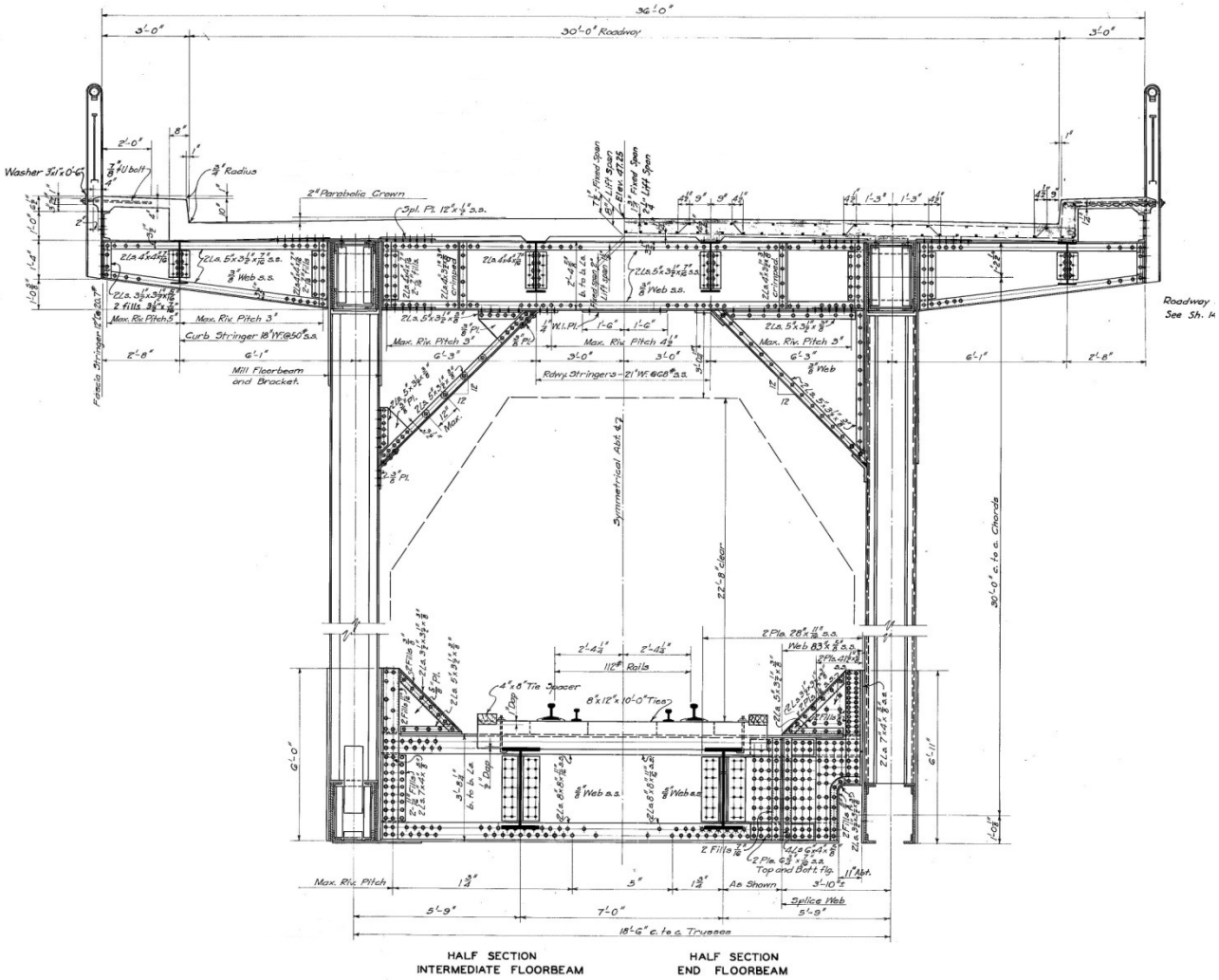

TYPICAL BRIDGE RAILROAD DECK CROSS SECTION

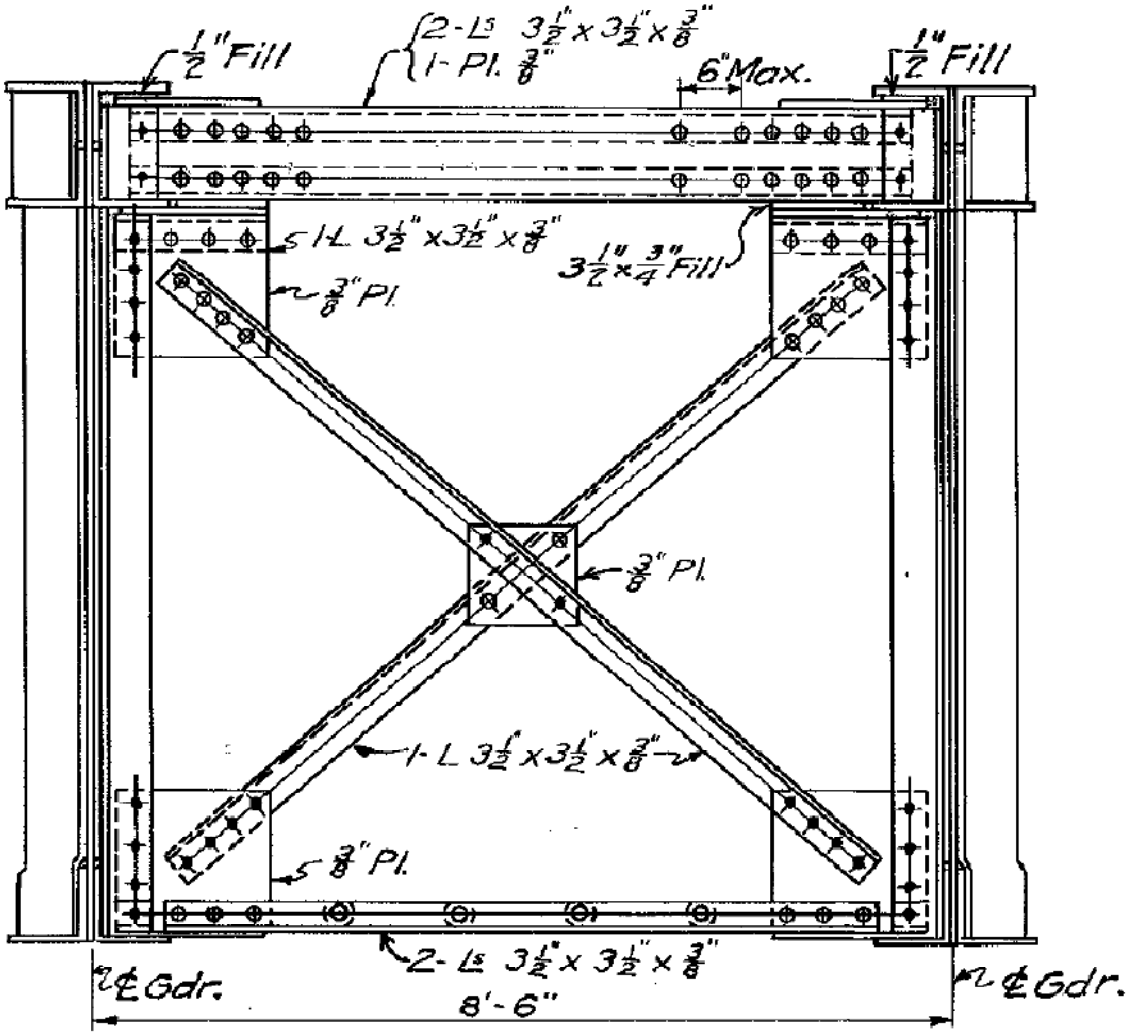

CROSS SECTION – RETRACTABLE RAILROAD APPROACH SPAN 21

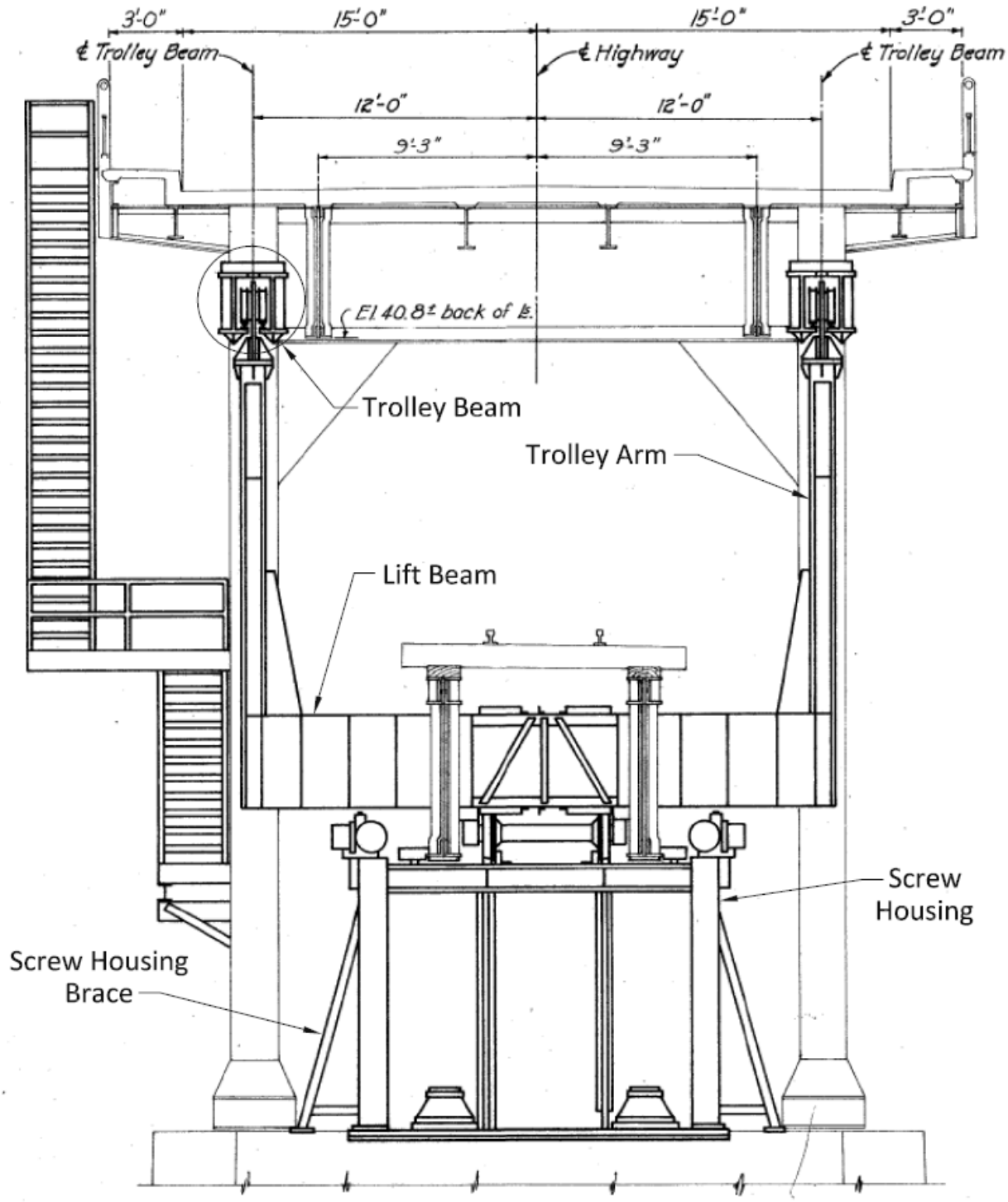

INSPECTION FINDINGS

INTRODUCTION

In May and June of 2009, HDR Engineering, Inc. (HDR) and Hoyle Tanner and Associates, Inc. (HTA) performed an in-depth inspection of the Sarah Mildred Long Bridge for the New Hampshire Department of Transportation. The inspection results are to be used to perform a load rating for the existing structure in its as-inspected condition and to develop rehabilitation cost estimates for the Sarah Mildred Long Bridge as part of the Bridge Inspection and Cost Analysis (BICA) Study.

BRIDGE DESCRIPTION

The Sarah Mildred Long Bridge carries the Route 1 Bypass over the Piscataqua River from Portsmouth, New Hampshire to Kittery, Maine. The structure is located in a tidal area where water elevation typically has an eight to twelve foot variation between high and low tide. The tower-drive vertical lift bridge was built in 1940. The five main spans carry both highway and rail traffic and consist of five riveted steel, straight-back, warren-type truss spans. The roadway approach spans consist of fifteen approach spans on the south end of the bridge and seven approach spans on the north end of the bridge. They are comprised of built-up riveted deck girders and floorbeams, as well as rolled I-shaped and C-shaped stringers. The railroad approach spans consist of three deck girder spans on the south approach, as well as two fixed deck girder spans and a retractable deck girder span on the north approach. The roadway and sidewalk decks are composed of reinforced concrete and carry at 30 foot wide roadway. The railroad spans carry timber tie open decks. The truss spans are supported by reinforced concrete piers with granite facades. The approach spans are supported by reinforced concrete piers and abutments, and steel pier bents.

The spans are numbered 1 to 27, from south to north. The truss spans are numbered from south to north as 16 to 20 and are referred to as Truss Spans 1 to 5 within this report. Truss panel points and floorbeams are numbered from south to north with the southernmost panel point or floorbeam of each span designated as 0. Stringers are numbered from west to east.

INSPECTION METHODS

Several inspection access methods were utilized to perform the in-depth inspection of the Sarah Mildred Long Bridge.

The fascia side of the trusses, the fascia side gusset plates, the overhang and floorbeam support brackets and the bottom deck (railroad) floor system were inspected utilizing a bucket boat. The bucket boat is a custom designed and constructed craft consisting of a 30’ by 15’ boat with pontoons and a 60’ bucket.

The interior face of the trusses and the underside of the roadway deck were inspected utilizing a UB-30 hi-rail vehicle operating from the railroad deck.

The towers were inspected by industrial rope access. Structure climbing and of the vertical lift span were used to access the top of the towers.

The Truss Span Piers were inspected utilizing a bucket boat, as well as underwater diving.

The roadway approach span structural steel and underside of deck were inspected using a UB-30 operating from the roadway deck. Land access was utilized to inspect the bridge deck wearing surface and soffit, abutment and bases of the piers. The railroad approach spans were inspected by bucket boat and land access.

BRIDGE CONDITION

Item 58 – Overall Deck – Poor Condition

58.1: Deck

The bridge decks Spans 1-23 were rehabilitated in a 1987 project that consisted of removing the existing 1" asphalt wearing surface, scarifying ½" of the deck top surface and constructing a 1½" concrete overlay upon completion of partial and full-depth repairs. The project also included a complete deck replacement, with the thickness increased from 7½" to 8½", for Spans 24 to 27.

Bridge deck soffit condition observations are noted in this section. Spans 1 to 23 concrete overlay and Spans 24 to 27 integral wearing surface conditions are noted in the Item 58.2 Wearing Surface section of the report.

Roadway Approach Spans 1 to 15 and 21 to 23:

Numerous full-depth concrete repairs were observed on the deck soffit throughout the approach spans. Many of these repaired areas and other locations exhibit concrete spalling, delamination, cracking and efflorescence. Exposed reinforcement with significant section loss was also observed. Spalled areas range in size from approximately one square foot to 38 square feet. Deck spalls are also prominent around the curb PVC downspouts adjacent to the stringer top flanges.

The concrete sidewalks, curbs and deck overhangs also exhibit significant spalling, delamination and efflorescence. Curb spalls occur on both sides of the expansion joints at numerous locations. Curb spalls were also observed at bridge rail post locations. Exposed reinforcement was observed at many of the locations.

Truss Spans 1 to 5, Roadway deck:

Truss Span 1 deck soffit between trusses exhibits random map cracking. Truss Spans 2 soffit exhibits one 6" x 1' spall with exposed reinforcement. Truss Span 3 (lift span) deck soffit between the trusses has numerous full depth repairs and other locations exhibit concrete spalling, delamination and cracking. Areas of honeycombing and spalling, with exposed reinforcement, were observed on the Truss Span 5 soffit.

The roadway deck overhangs are spalled around the majority of metal drain pipes and PVC downspouts. The deck is also spalled adjacent to locations where the pedestrian rail connects to the fascia stringer. Many bays have spalls ranging in area from one-half square foot to 24 square feet. The majority of bays have hairline cracks transverse to the roadway, many with efflorescence. Spalls typically occur between the interior stringer and top chord.

Railroad deck:

The open-deck railroad ties are in generally fair condition with moderate checking and splitting on the majority of the railroad ties.

Roadway Approach Spans 24 to 27:

The deck in approach Spans 24 to 27 is considered to be in good condition. Transverse cracking with some efflorescence was observed primarily in the overhangs. Concrete spalls were primarily observed at expansion joint locations; however, some spalls were observed at girder and stringer flange edges. Rust staining was also observed in the deck soffit and overhang cracks.

58.2 Wearing Surface:

Roadway Approach Spans 1 to 15 and 21 to 23, and Truss Spans 1 to 5:

Visual observations and soundings by the chain drag method were utilized to determine the condition and extent of deterioration for the 1½" concrete wearing surface. Based on the visual observations and nondestructive testing methods, the wearing surface is considered to be in poor condition. The following deficiencies were noted:

- The wearing surface has been repaired in numerous locations.
- Many of these repaired areas exhibit extensive cracking with some delamination.
- The wearing surface exhibits extensive cracking, some of which originates at repair locations.
- A large number of delaminated areas were identified and mapped during the inspection.
    - Approximate areas of delamination:
        - Approach Spans 1 to 15 = 1610 square feet (Span 5 is the worst with approximately 210 square feet).
        - Truss Spans 1 to 5 = 2420 square feet (Truss Span 3 (lift span) is the worst with approximately 840 square feet).
        - Approach Spans 21 to 23 =1320 square feet (Span 23 is the worst with approximately 620 square feet).
    - Total estimated delaminated area = 5350 square feet, which represents approximately 7% of the wearing surface area of these spans, which is approximately 75,500 square feet.

Roadway Approach Spans 24 to 27:

Visual observations and soundings by the chain drag method were utilized to determine the condition and extent of deterioration for the ½" integral concrete wearing surface. Based on the visual observations and nondestructive testing methods, the wearing surface, for these spans, is considered to be in good condition. The integral wearing surface exhibits random cracking. Spalling and delamination was observed adjacent to expansion joints. Little or no spalling or delamination was observed within the spans.

58.3 Deck Joints:

Roadway Approach Spans 1 to 15:

The South Abutment compression seal is damaged and holed at the curb. The seal is filled with sand and debris.

Approach Spans 1 to 15 have three different expansion joint types. The expansion joints at Piers 1, 3, 5, 7, 9 and 11 consist of a Transflex 200-A elastomeric modular type joint. Fixed Piers 2, 4, 6, 8, 10 and 12 consist of a nominal 2"x2" neoprene compression seal joint. The expansion joints at Piers 13 through 15 are prefabricated compression joints installed during the 1987 rehabilitation project. The following deficiencies were noted:

- Joints are filled with sand and debris.
- Compression seals at fixed Piers 2, 4, 6, 8, 10 and 12 are leaking.
    - These joints are located directly above the end floorbeam top flange.
    - Extensive leakage has led to significant deterioration of the floorbeam top flanges and overhang tension tie plates.
    - Extensive leakage at the sidewalk has led to significant deterioration of the curb stringers.
    - Refer to Items 59.2 and 59.3 for stringer and floorbeam condition.
- Compression seal at Pier 4 joint has been repaired with what appears to be an elastomeric type sealant.
- Compression seal at Pier 6 is no longer tight against the concrete.
- Significant deterioration of easterly curb at Pier 8 has rendered the compression seal ineffective in this location.
- Pier 12 compression seal has a missing section at the westerly sidewalk curb. Seal was replaced with polystyrene foam.
- Piers 1, 3, 5, 7, 9, 11, and 13 through 15 expansion joints are leaking.
- The elastomeric modular seal at Piers 1, 3 and 9 was repaired with what appears to be an elastomeric type sealant.
- Pier 15 joint seal has failed and is hanging below the deck.
- Expansion joint steel is heavily rusted.

Truss Spans 1 to 5:

The following deficiencies were noted:

- Finger joints are filled with sand and debris.
- Finger joints exhibit rusting with laminar corrosion.
- Moderate laminar corrosion on sidewalk sliding plates.
- Pier 16 joint sidewalk plates are holed.
- Pier 17 (South Tower) westerly sidewalk seating plate is bent at the corner.
- Pier 18 (North Tower) sidewalk seating plates are bent and torn.
- North Tower compression seal is torn and is not seated against the concrete sidewalk curb.
- Pier 19 easterly sidewalk sliding plate exhibits heavy rusting.
- Pier 19 finger joint has plow damage.
    - Broken fingers were repaired.
    - Some finger ends are damaged.

Roadway Approach Spans 21 to 27:

The existing finger plate expansion joints were replaced with prefabricated compression seal joints as part of the 1987 rehabilitation project. Joint steel is heavily rusted with laminar corrosion.

Expansion joint structural steel rusting and subsequent staining of the concrete deck soffit is indicative of extensive joint leakage.

The North Abutment compression seal is torn at the curbs. Sections of the seal are cracked. One section of the seal, adjacent to a concrete header repair, is missing. Water leaks onto the superstructure and substructure below.

58.4 Sidewalks:

Sidewalk decks are comprised of reinforced concrete, supported by the roadway deck, a C-shaped steel stringer and floorbeam overhangs. See sections 58.1, 59.2 and 59.3 for the conditions of the concrete deck, stringers and floorbeams, respectively.

58.5 Bridge Rail:

The existing pipe rail with balusters is inadequate for vehicular impact. The rail was strengthened by adding a 12" horizontal HSS tube section. The bridge rail is considered to be in serious condition due to the following deficiencies observed:

- Rail posts are holed at connection locations below supplemental posts added to correct this deficiency.
- Pipe rail is heavily rusted with separation from rail posts and holed areas throughout.
- Heavy rusting and laminar corrosion of pipe rail, balusters, rail posts and other rail components.

58.6 Drainage:

Roadway Approach Spans 1 to 15 and 21 to 27:

The scupper downspouts exhibit significant rusting and section loss. Downspout section loss at ends allows water and salt-laden debris to collect on curb stringer flanges resulting in moderate to severe laminar corrosion and section loss.

Truss Spans 1 to 5:

The fixed truss spans have both metal and PVC drain pipes underneath the deck. The PVC downspouts are small diameter drain pipes, approximately 1" diameter, and are spaced at approximately 5' on center. The metal downspouts are large drain pipes located at the midpoint of each bay.

Metal pipes are typically heavily deteriorated with corrosion holes. The corrosion holes have allowed water to pour onto the interior overhang stringer, causing laminar corrosion on the stringer. Truss bottom chords, diagonals and verticals located under the metal drains pipes have deterioration that is more advanced than the typical truss condition.

Item 59 – Overall Superstructure – Serious Condition

59.1 Girders

Roadway Approach Spans 1 to 15 and 21 to 27:

The girders are considered to be in satisfactory condition. The following deficiencies were noted during the inspection:

- Many end and intermediate bearing stiffeners exhibit significant pack rust between the protruding angle legs.
- There is pack rust with section loss between girder inner and outer cover plates.
- Some girders also exhibit pack rust with section loss between the girder bottom flange angle and cover plate.
- Spans 1 to 12 girder end protruding angle legs exhibit significant section loss. Many have holed legs.
- Moderate to heavy rusting with paint system failure at girder ends.
- Some areas of light rusting with paint system failure along the girder length.
- Minor web plate corrosion with section loss at bearing locations.
- Moderate to heavy top flange angle rusting with section loss at bearing locations.
- Rivet head section loss at bearing locations for some of the girders.
    - Span 3 West Girder is the most severe with 10 rivets having 40% estimated loss.
- Rivet head section loss at isolated locations along the span.
    - Span 21 West Girder has 10 rivets with estimated 80% loss and 6 rivets with nearly 100% loss.
- Isolated pitting on top surface of bottom flange exterior angles.
- Some girder webs at or near the bearings were repaired with welded plates.
- Span 13 East and West Girder hinge seat flanges are holed and are very thin.
    - Top flange exhibits heavy rusting and laminar corrosion at hinge locations due to expansion joint leakage.
- Spans 24 to 27girder hinge seat flange angles exhibit laminar corrosion of girder hinge seat flanges with section loss.
- Spans 24 to 27 hinge seat flange angle to web rivets exhibit head loss.
- Spans 24 to 27 girder hinge seat flanges were repaired with welded plates.
- Span 25 west girder hinge support bottom flange has approximately ½" of deformation.
- Span 27 East Girder bottom flange angles and cover plates are bent due to vehicular impact.

Refer to Appendix C for detailed girder condition sketches.

Railroad Approach Spans 14, 15, 21, 22, 23:

Span 14 girders have laminar corrosion on the top flange. The East Girder has laminar corrosion on the bottom flange at the lateral gusset plates. The West Girder has laminar corrosion on the bottom flange for the southernmost 8'.

Span 15 girders have pitting on the top face of the interior side of the bottom flange at the southern end of the span. The East Girder has pitting for a length of ten feet and the West Girder for a length of fifteen feet. Both girders have pitting on the bottom flange for a length of twelve feet from the

north end. The fascia sides of the bottom flanges have surface rust over the full length. The West Girder has pack rust with minimal prying between flange plates at midspan. The top flanges have laminar corrosion over the majority of the span length. The interior faces of the webs have surface rust at span ends.

Span 21 is a retractable span that is left open during summer months to allow the passage of small boats. The span was inspected while retracted, resting above Truss Span 5. The girders have laminar corrosion on the bottom flange and bearing stiffener at the north end. The East Girder has distortion in the web at the northernmost 6" of the web. The bottom flanges of both girders have up to 1/8" pitting over the northern four bays and at the southern end, with minor surface corrosion elsewhere. The top flanges have moderate to heavy laminar corrosion over the northern four bays and surface rust elsewhere. The end stiffener plate at the southern end of the West Girder has two corrosion holes.

Span 22 girders exhibit laminar corrosion on the bottom flanges for six to eight feet from span ends and surface rust on the top face of the top flanges, full-length. The outside faces of the girders have paint loss with some surface rust on the top face of the bottom flange.

Span 23 girders have surface rust on the top face of the top flanges. The East Girder bottom flange has laminar corrosion for a length of 5' from the south bearing.

59.2 Stringers:

Roadway Approach Spans 1 to 15 and 21 to 27 Sidewalk Fascia Beams:

Sidewalk fascia beams are considered to be in serious condition. The following deficiencies were noted:

- Paint system failure with heavy rusting.
- Laminar corrosion of channel top flange.
- Web holes adjacent to rail posts.

Roadway Approach Spans 1 to 15 and 21 to 27 Curb Stringers:

The curb stringers are considered to be in poor to serious condition. The following deficiencies were noted and are summarized below:

- Moderate to heavy rusting with paint system failure at stringer ends.
- Moderate to heavy top flange rusting with laminar corrosion and section loss.
- Moderate to heavy bottom flange rusting with laminar corrosion and section loss at scupper locations.
    - Span 9, Bay 1, Stringer S4 has approximately one quarter of the flange width lost.
- Moderate to heavy web rusting with laminar corrosion and section loss.
- The following stringers have holed webs:
    - Span 4, Bay 3, Stringer S1.
    - Span 6, Bay 3, Stringers S1 and S4.
    - Span 10, Bay 3, Stringer S1. NHDOT bridge maintenance has repaired this stringer since the time of inspection.
    - Span 12, Bay 3, Stringers S1 and S4.

- Span 5, Bay 1, Stringer S4 top flange is not in contact with the deck.

Refer to Appendix C for detailed curb stringer condition sketches.

Roadway Approach Spans 1 to 15 and 21 to 27 Roadway Stringers:

The roadway stringers are considered to be in fair condition. Moderate to heavy rusting with some laminar corrosion was observed at stringer ends. Additionally, Span 6 Roadway Stringer S1 has section loss at web cope/flange interface.

Truss Spans 1 to 5:

The roadway deck overhang is supported by an I-shaped steel curb stringer located below the roadway curb and a C-shaped channel on the fascia end of the overhang. The curb typically has laminar corrosion on the bottom flange at metal drain pipe locations. The C-shaped fascia beam typically has laminar corrosion at locations where the pedestrian pipe railing is bolted to the channel. In Span 1, Bay 4 East and Span 4, Bay 1 East, there is laminar corrosion on all surfaces at the south end of the curb stringers. In Span 2, Bay 8 East, there is laminar corrosion on the west face of both flanges and the web of the curb stringer at the metal drain pipe. Under the Operator House on Span 2, Bays 7 and 8, the curb stringer has paint loss and surface rust throughout, as well as laminar corrosion on the top flange.

The truss span roadway stringers are considered to be in good condition. No serious deficiencies were observed.

Truss span railroad stringers are typically in fair condition. There is laminar corrosion on the bottom flanges at interfaces with truss lateral bracing connections. The top flanges typically have surface rust full-length and the webs typically have laminar corrosion on less than 5% of their surface area.

Railroad stringers at Piers 17 and 18 span over the piers at the towers. There are two stringers that carry the railroad track and an additional four stringers that support working platforms at the towers. These stringers span between two cross girders that are supported by the towers. The stringers are typically rusted with laminar corrosion and pack rust. These stringers are considered to be in serious condition.

The following deterioration was noted on the stringers at Pier 17 (South Tower):

- The East Railroad Stringer has 3/8" section loss in the bottom flange at span ends.
- Both railroad stringers have up to 1" pack rust between the top flange and the cover plate, with up to 1/8" section loss in the top flange. The cover plates are heavily deteriorated.
- The two eastern platform stringers have up to 1" pack rust between the bottom flange and the end connection.
- The bottom flange of the easternmost platform stringer has up to 3/16" section loss in the bottom flange.

The following deterioration was noted on the stringers at Pier 18 (North Tower):

- The West Railroad Stringer has 1/8" section loss in the bottom flange.
- The top flange of the West Railroad Stringer has 100% section loss in a 4" wide portion of the top flange over a length of six feet.
- The westernmost platform stringer has a 12"x1" hole in the web at approximately midspan.

59.3 Floorbeams:

Roadway Approach Spans 1 to 15:

Intermediate floorbeam cantilever top and bottom flange angles exhibit moderate to heavy rusting with laminar corrosion and section loss. No serious deficiencies were observed on intermediate floorbeam sections between the girders. Refer to Appendix C for detailed intermediate floorbeam condition sketches.

Spans 1 to 15 end floorbeams are considered to be in serious condition. The following deficiencies were observed:

- Expansion joints and fixed joint compression seals leak resulting in significant rusting, laminar corrosion and section loss of top and bottom flange angles.
- In many areas, the top flange angles are holed exposing the deck above.
- Top flange angle leg section loss of up to 100% was observed on numerous floorbeams.
- Top flange tension tie plates, which provide floorbeam cantilever continuity, are severely corroded with section loss.
- Tie plate section loss up to 50% is estimated in some locations. Section loss could only be estimated since plate is partially embedded within the bridge deck.
- Rivet head loss at tension tie plates.
- Rivet head section loss at isolated locations along the floorbeams.
- The floorbeams identified below have severe deficiencies:
    - Span 2 end floorbeam FB3 has up to 100% top flange angle section loss for full width of leg. Remaining angle leg has over 50% section loss.
    - Span 3 end floorbeam FB0 cantilever has up to 90% top flange loss and tension tie plate heavy rusting with laminar corrosion.
    - Span 4 end floorbeam FB3 cantilever has up to 100% top flange loss and approximately 50% loss of tension tie plate.
    - Span 6 end floorbeam FB3 between the girders has up to 100% section loss in the top and bottom flange angles in several locations.
    - The cantilevered portion of span 6 floorbeam FB3 has up to 100% section loss in the top flange angle near the tension tie plate with significant rivet head loss on both sides of the web.
    - Span 8 end floorbeam FB3 has up to 100% top flange angle section loss for full width of leg. Remaining angle leg has over 50% section loss.
    - The cantilevered portion of span 8 end floorbeam FB3 has up to 100% section loss in the top flange angle near the tension tie plate with significant rivet head loss on both sides of the web.
    - Span 15 end floorbeam FB4 has 100% bottom flange angle section loss for full width of leg.

Refer to Appendix C for detailed end floorbeam condition sketches.

Truss Spans 1 to 5:

On the roadway deck, the floorbeam overhangs supporting the concrete deck are in generally fair condition. Floorbeam overhangs have laminar corrosion on the top flange at the ends, beneath the C-shaped fascia stringer, as well as surface rust on the top and bottom flanges at the interface with the truss gusset plate.'

The roadway floorbeams between trusses are in generally fair condition. Top flange angles generally exhibit light to moderate rusting. Some floorbeams exhibit areas of heavy rusting with laminar corrosion. Many of the tension tie plates have tack welds on both sides of the web that are approximately 1½" to 2" in length. One bottom flange angle section loss was observed on truss span 1 floorbeam 0 and is estimated to be approximately 50% to 70%. Due to the number and location of electrical conduits, a section loss could not be measured. Truss spans 1 and 2 floorbeams FB8 and FB0 respectively, also exhibit some section losses.

On the railroad deck, intermediate floorbeams typically have surface rust throughout the top face of the top flange, on knee braces and on less than 5% of the web surface area. There is typically pack rust between the bottom flange and the truss lateral bracing gusset plates, and laminar corrosion on the top face of both flanges between the stringers. There is also laminar corrosion on the top flange at the interfaces with knee braces. Floorbeams have two 1" diameter holes drilled in each side of the flange near midspan. The holes are not filled and are presumably holes for tie anchors that are no longer used.

End railroad floorbeams are in similar condition to intermediate floorbeams, with the exception that top flanges typically have laminar corrosion on the full length of the top face and no pack rust at lateral gusset plate interfaces. Additionally, the steel brackets attached to the web that support the deck between spans have laminar corrosion throughout.

Railroad floorbeams are in fair condition. See Appendix C for a diagram of typical railroad floorbeam deterioration.

Railroad cross girders at Piers 17 and 18 support the stringers that span over the piers at the towers. These cross girders are typically rusted throughout with corrosion holes in the top flange cover plate. The south cross girder on the south tower has up to 1" pack rust between the web and bottom flange, laminar corrosion on the web and corrosion holes on the top flange.

Roadway Approach Spans 21 to 27:

Spans 21 to 27 floorbeams are considered to be in poor to serious condition. The following deficiencies were noted:

- Cantilever top and bottom flanges exhibit moderate to heavy rusting with laminar corrosion and section loss.
- Rivet head loss at tension tie plates.
- Top angles between girders exhibit moderate rusting.
- The bottom flange angles between the girders exhibit section loss.
- Rivet head section loss at isolated locations along the floorbeams.
- Top flange tension tie plate's exhibit moderate to heavy rusting with laminar corrosion and section loss.

Refer to Appendix C for detailed floorbeam condition sketches.

59.4 Truss Members:

Truss Spans 1 to 5:

Truss bottom chords typically have surface rust on the top face of the top and bottom flanges and laminar corrosion on the top flange at batten plate interfaces. The interior web typically has laminar corrosion at interfaces with gusset plates. The exterior web plate typically has isolated paint loss and surface rust. Batten plates on the bottom chords are typically rusted. Bottom and top flanges typically have laminar corrosion with section loss between gusset plates at truss joints. Several chord members have sustained more advanced deterioration, including laminar corrosion on the exterior web, top flanges and bottom flanges. Several batten plates have advanced deterioration with corrosion holes and pack rust with prying.

Truss top chords are typically in fair condition, with surface rust on the top face of the bottom flanges. Several top chord members have pack rust with prying between the batten plate and bottom flange, as well as between the bottom flange and web plates.

Truss diagonals are typically in fair condition, with surface rust on less than 10% of the webs, top face of both flanges and lacing bars. Several members have more advanced deterioration, which consists of laminar corrosion on the top flanges, batten plates and lacing bars, as well as the exterior web. Several batten plates have corrosion holes.

Truss verticals are typically in fair condition, with some surface rust on the exterior flange and lacing bars. Several verticals have more advanced deterioration, consisting of laminar corrosion on the lacing bars, batten plates and exterior webs. Many of the verticals with advanced deterioration have pack rust between the flanges and bottom chord gusset plates. Vertical L4-U4 on Truss Span 5 West Truss has a 3”x1” corrosion hole on the exterior web near the lower gusset plate.

Truss members underneath metal drain pipes typically are the members with advanced deterioration.

See Appendix C for a detailed schedule of truss member conditions.

59.5 Towers and Retractable Span 21:

The tower facades have pack rust between several panels and at the tower windows. The pack rust is causing prying between overlapping panel points as well as prying of the façade from the tower. There are fifteen cracks throughout the façade, ranging in length from 1” to 53”. Three of the cracks near the northwest corner of the South Tower exhibit efflorescence from the mortar bed behind the panels. There are isolated areas with rust and laminar corrosion throughout the tower façades, with heavier corrosion within the splash zone near the bridge roadway deck. A 20’ length of panel on the southwest corner of the North Tower, a 15’ length of panel on the northeast corner of the North Tower and a 12’ length of panel on the northwest corner of the South Tower are prying away from the tower. Prying is up to 0.75” on the North Tower and up to 2.5” on the South Tower. A layer of mortar is visible behind the pried plate on the South Tower. There is a 3”x1” hole located on the South Tower, south face, east side approximately 3’ below the windows. There are also

corrosion holes varying between 1" and 2" diameter in size located on the North Tower, north face, west side.

Tower bracing typically has some isolated surface rust on the top faces of members. Panel points typically have laminar corrosion and pack rust at interfaces between members and gusset plates. On the North Tower, north face, the west gusset plate at panel point T3 is bent with laminar corrosion. Also on the North Tower, north face, the diagonal between panel points T1 and T2 is bent, apparently due to impact damage. On the South Tower, north face, the east gusset plate at panel point T4 has heavy laminar corrosion and it is bent out of plane approximately 2". Also on the South Tower, the vertical legs underneath the windows typically have pack rust with prying on the outside face.

Retractable Span 21 Trolley Beams are in generally satisfactory condition, with some surface rust on the horizontal faces of the beam. The elastomeric bearings for the Trolley Beams at Pier 21 are crushed and bulging. The Trolley Arms have surface rust adjacent to the Lift Beams and knee braces, as well as laminar corrosion at the bolted splice adjacent to the Trolley Beams. The Trolley Arms have ladder rails welded to them. The Lift Beams have laminar corrosion on the top flanges over the full length and on the bottom flanges at beam ends. Laminar corrosion on the top flange is more severe at the interface with knee braces. Screw Housing and Screw Housing Braces at Pier 20 have laminar corrosion throughout, with more severe corrosion near the base. Screw Housing and Screw Housing Braces at Pier 21 have laminar corrosion throughout, with more severe corrosion and several large corrosion holes near the base. The Screw Housing Braces at Pier 21 have up to 50% loss in cross-sectional area.

59.6 Bearings:

Roadway Approach Spans 1 to 15:

Approach Spans 1 to 12 bearings exhibit significant rusting and laminar corrosion. Span 5 northwest bearing anchor bolt nuts have up to 30% section loss. Span 13 girder hinge seat bearings are in satisfactory condition. Spans 14 and 15 bearings are also considered to be in satisfactory condition.

Railroad Approach Spans 14, 15, 21, 22 and 23:

Fixed railroad approach span bearings typically have laminar corrosion on the outside face of the bearing assemblies. In Spans 22 and 23, there is up to 70% section loss in the bolt nuts connecting the deck girders to the bearing assemblies. The south bearing anchor bolt nuts in Span 23 have up to 100% section loss. In Span 22, the north bearings have up to 80% section loss on the anchor bolt nuts. The Span 22 north bearings also have laminar corrosion on the bearing base plates. In Spans 14 and 15, there is up to 80% section loss in the anchor bolt nuts.

Retractable Railroad Approach Span 21 bearing plates typically have laminar corrosion and up to 50% section loss on bolts connecting the plate to the deck girders. Bearing base plates typically have surface rust on all surfaces.

Truss Spans 1 to 5: Truss bearings at Piers 15, 16, 19 and 20 typically have laminar corrosion on the base plate, as well as on the vertical bearing plate at the interface with the pin.

- Span 1 South Bearings (fixed – Pier 15) have surface rust between the pin caps and the bearing assemblies.
- Span 1 North Bearings (expansion – Pier 16) have laminar corrosion on the bearing pins. The anchor bolt nuts are heavily deteriorated, with up to 80% section loss.
- Span 2 South Bearings (expansion – Pier 16) have laminar corrosion on the inside of the gusset plates bearing on the pin. The anchor bolt nuts are heavily deteriorated, with up to 80% section loss.
- Span 2 North Bearings (fixed – Pier 17) have section loss to several anchor bolts. The east bearing has 70% section loss to two anchor bolt nuts. The west bearing has 90% section loss to an anchor bolt nut, and 30% section loss to another. The east bearing has laminar corrosion on all surfaces inside the bearing assembly.
- Span 3 South Bearings (fixed – Pier 17) have laminar corrosion on the base plates. All anchor bolts on the bearings are bent forward, toward Span 3.
- Span 3 North Bearings (expansion – Pier 18) have some surface rust between the base plate and top bearing plate.
- Span 4 South Bearings (fixed – Pier 18) have up to 80% section loss on two anchor bolt nuts on the west bearing. Two anchor bolt nuts on the east bearing have 70% and 30% section loss. The west bearing has surface rust on the pin cap. The east bearing has laminar corrosion on the bearing gusset plate inside the bearing assembly.
- Span 4 North Bearings (expansion – Pier 19) have 80% section loss on two anchor bolt nuts on the west bearing and 40% section loss on two of the east bearing anchor bolt nuts. There is laminar corrosion on the bearing gusset plates inside of the bearing assemblies.
- Span 5 South Bearings (expansion – Pier 19) have laminar corrosion on the bearing gusset plates inside of the bearing assemblies. The east bearing has laminar corrosion on the outside face of the bearing assembly. Two anchor bolts on the east bearing have 40% section loss.
- Span 5 North Bearings (fixed – Pier 20) have section loss to several anchor bolt nuts. On the east bearing, one anchor bolt nut has 60% section loss and another has 30% loss. On the west bearing, all anchor bolt nuts have up to 30% section loss. There is surface rust on the exterior surface of the bearing assembly.

Roadway Approach Spans 21 to 27:

Piers 21 and 22 Bearings:

The stainless steel expansion bearings are in satisfactory condition. The Span 22 West Bearing PTFE pad has partially slid out from between the bearing plates.

Girder Hinge Seat Bearings:

The girder hinge seat stainless steel expansion bearings are considered to be in satisfactory condition; however, the Span 23 West Girder hinge PTFE pad has slid out from between the bearing plates.

North Abutment Bearings:

The North Abutment bearings exhibit significant rusting and laminar corrosion. Anchor bolts and nuts are heavily rusted with section loss.

Retractable Span 21 Trolley Beam Bearings:

The elastomeric bearings are bulging.

59.7 Connections and Plates:

Roadway Approach Spans 1 to 15 and 21 to 27:

The lateral bracing to floorbeam connection plates are in fair condition. The following deficiencies were noted:

- Paint system failure with moderate rusting on some connection plates.
- Holed plate with significant pack rust at Span 6, Bay 3, FB3, for FB2 to FB3 bracing member.
- Heavy rusting with laminar corrosion on FB2 to FB3 Span 8, Bay 3, FB3 connection plate.
- Span 27, Bay 3, FB3 northeasterly connection plate is bent.

Railroad Approach Spans 14, 15, 21, 22 and 23:

The railroad approach spans have gusset plates connecting lateral bracing and cross frames to the top and bottom flanges. On the fixed railroad spans, top and bottom gusset plates typically have laminar corrosion on the top face. End bottom lateral gussets are heavily corroded, with a corrosion hole in the northernmost gusset on the East Girder of Span 22. In Span 22, several bottom lateral gusset plates near midspan have pack rust with prying between the bottom flange and gusset plate. In Span 23, the end cross frame gusset plates are severely deteriorated, with almost 100% section loss on the East Girder top gusset plate.

Span 21 lateral gusset plates located in the northernmost four bays have laminar corrosion on the top face. The northernmost bottom lateral gusset plate on the East Girder has heavy deterioration with a 3" diameter corrosion hole. Lateral gusset plates elsewhere have paint loss and surface rust on the top face.

Truss Spans 1 to 5:

Truss gusset plates are typically in satisfactory condition. Plates typically have small, isolated areas of laminar corrosion. Several gusset plates exhibit prying due to pack rust between the gusset and truss member. Upper gusset plates typically have surface rust at the interface with the upper floorbeam overhang and at the interface with the roadway floorbeam knee braces. Gusset plates at panel points U0 and U8 typically have laminar corrosion and pack rust over much of the plate. See Appendix C for a schedule of truss gusset plate deterioration.

Truss Bottom Chord Lateral Bracing gusset plates are typically corroded on the top face. There is paint rust, surface rust and some laminar corrosion on the plates. There is typically pack rust on the plate at interfaces with the lateral bracing and floorbeams. Steel around the edges of cut drain holes is typically rusted.

Truss Top Chord Lateral Bracing connection plates are generally in good condition. Connection plates exhibit light rusting. Pack rust with prying action was observed at the lateral bracing angle and connection plate interface.

Stringer bracing and top cross frame gusset plates at the railroad deck are typically rusted with some laminar corrosion on the top face. Bottom cross frame gusset plates have some surface rust on the top face.

Lateral bracing gusset plates on the railroad deck at Piers 17 and 18 are typically corroded and covered with debris. At Pier 17, the gusset plate at the south end of the East Railroad Stringer has a corrosion hole.

59.8 Bracing:

Roadway Approach Spans 1 to 15 and 21 to 27:

Lateral bracing is considered to be in good condition. Paint system failure with moderate rusting with some laminar corrosion was observed on several of the bracing members. The lateral bracing angle in Span 27, Bay 3 from FB2 to FB3 is bent.

Railroad Approach Spans 14, 15, 21, 22 and 23: Top lateral bracing typically have pack rust between the two angles with prying, and surface rust on the top face. Bottom lateral bracing typically have paint loss and surface rust throughout with laminar corrosion near the gusset plate connections. End cross frames typically have laminar corrosion throughout. Intermediate cross frames typically have surface rust on the top face of the top strut with isolated areas of surface rust throughout.

Truss Spans 1 to 5:

Truss Bottom Chord Lateral Bracing typically has surface rust on the top face, as well as pack rust at the interfaces with the lateral bracing gusset plates at the truss panel points and at the center of each bay. Truss lateral bracing also typically has pack rust between the two steel angles comprising each bracing member, causing a scalloping effect throughout the member.

Top chord lateral bracing members are in generally good condition. Members' exhibit paint system failure with light to moderate rusting.

Railroad deck stringer cross frames typically are rusted on the top face of the top strut. Other cross frame members exhibit some paint loss and surface rust. Top cross frame gusset plates have laminar corrosion on the top face.

Railroad deck stringer bracing typically are rusted on the top face and have pack rust between the two steel angles. Like the truss lateral bracing, this causes prying between the two members.

Lifting Girder Bracing at Truss Span 3:

The horizontal struts bracing the bottom chord at truss ends have laminar corrosion on horizontal surfaces. There is a lacing bar missing from the I-shaped southeastern strut. The steel angles connecting the box-shape struts to the end gusset plates are bent and distorted. There is a 4.5" long

crack in the steel angle connecting the top flange of the northwestern box-shape strut connection to the truss gusset plate. The same box-shaped strut has corrosion holes in the top lacing bars. The box-shaped struts have laminar corrosion at the guide rail.

59.9 Operator House Support Structure:

The Operator House Supports exhibit some laminar corrosion and pack rust at connections to the truss. The Operator House framing system exhibits some laminar corrosion on the support beams and stringers, as well as surface rust on top flanges. Purlins are in generally good condition. Portions of the Operator House have stay-in-place forms underneath the deck. These forms are rusted at the edges.

Item 59 – Overall Substructure – Serious Condition

62.1 Abutments:

The South Abutment and wingwalls exhibit significant concrete spalling with exposed reinforcement, delamination and map cracking, and are considered to be in poor condition. Approximately 200 to 300 square feet of delaminated and potential repair area was identified. Two large spalls with exposed reinforcement were observed on the abutment face. One spall was measured to be 4" deep. The wingwall concrete has spalled in several areas, primarily on the Southwest Wingwall.

Pier 13 has delamination and scaling between the steel bent columns. The bearing seat is spalled 4" to 8" deep. There is exposed rebar on the top face and there is a hairline crack at the western railroad bearing.

Pier 23 has two spalls on the backwall and one on the abutment stem. There is soil erosion at the southwest corner of the backwall. There are hairline cracks on the top and sides of the pier cap.

62.2 Piers:

Piers 1 through 12 are considered to be in poor to serious condition. The piers exhibit significant areas of concrete spalling, delamination and map cracking with areas of exposed reinforcement. Many piers have been repaired with concrete patches. The previous repairs exhibit significant concrete spalling, delamination and map cracking. Total estimated delaminated and potential repair areas for Piers 1 to 12 is approximately 6000 square feet. This area represents approximately 28% of the pier area above the footings, which is approximately 21,430 square feet.

Piers 1, 2 5, 6 and 7 have steel plate jackets to protect the concrete within the tidal fluctuation zone. These plates are heavily corroded and gapped at the corners allowing salt-laden water to infiltrate the pier columns. Pier 2 has voids approximately 5" deep, Pier 6 has voids over 12" deep, and Pier 7 has voids over 6" deep within the steel jacket limits. Pier 6 also has exposed reinforcement within the steel jackets.

Additional deficiencies observed are noted below:

- Pier 1 footing is exposed and exhibits map cracking. Two spalls were observed. One spall measured 12”x12”x2” deep. The second spall was shallow and measured 2”x18”.
- Pier 2 footing is exposed and exhibits map cracking.
- Pier 12 concrete cap has large width cracks emanating from the bearing anchor bolts.

Piers 14 through 22 have hairline cracks on the top and sides of the pier cap. Piers 14 through 17 have vegetation on portions of the pier that are below the high water elevation. Piers 15 and 16 have previously patched spalls.

- Pier 15 has a 6’ by 4’ spall up to 6” in depth on the southwestern corner of the pier, as well as corrosion up to 6” deep with exposed reinforcement on the top face. The eastern corner of the pier cap is spalled with exposed rebar. There is a crack with efflorescence on the full height of the cap on the west face. The north face has a patched spall.
- Pier 16 has two spalls on the east face. On the north face, two areas where spalls were previously patched are cracking with efflorescence. On the east face, there are two small spalls on the east.
- Pier 17 has hairline cracks on the bearing pedestals and erosion on the west face. There is a 2” by 6” spall with a depth up to 1” on the west side of the south face and two spalls on the east side, the larger being 6“ by 3’. The concrete at the southwest corner is beginning to spall. The concrete is cracked and visibly lifting away from the pier.
- Pier 18 has several narrow and medium cracks with efflorescence, including at the northeast corner, adjacent to the tower base. There is a small spall on the south face and two on the west face. The largest measures 6” by 6” and up to 3” in depth. There is erosion on the west face pier cap.
- Pier 19 has a small spall on the east face and on the south face. Efflorescence is emanating from the hairline cracks in the pier cap.
- Pier 20 has erosion on the south and east faces.
- Pier 21 has a shallow 2” by 18” spall on the south face, as well as two circular patches below the west bearing. These circular patches may be repairs for conic pop-outs on the pier cap.
- Pier 23 has two spalls on the backwall and one on the abutment stem. There is erosion on the southwest corner of the backwall.

Steel Pier Bents at Piers 13, 14 and 21-26:

The steel bent substructures are comprised of built-up and W-shape columns, W-shape lateral bracing and built-up riveted cross beams. The bents exhibit varying degrees of rusting, laminar corrosion and section loss. The following deficiencies were noted:

- Pier Bent 13 has pack rust with prying action at multiple lateral bracing angle and connection plate interfaces. Base plate heavy rusting with pitting and laminar corrosion was observed. Base plate anchor bolt nuts exhibit laminar corrosion with section loss. The cross beam exhibits heavy rusting with laminar corrosion. Rivet head section loss was observed at cross beam to column connections.
- Pier Bent 14 columns exhibit moderate to heavy rusting with laminar corrosion. Rivet head section loss was observed at cross beam to column connections. The east cross beam cantilever tension tie plate has 100% section loss with a knife edge. The deterioration extends to the cantilever flange angle.
- Pier Bent 21 columns exhibit moderate to heavy rusting in areas of paint system failure on the exterior surface. The cross beam bottom flange angles exhibit pitting and section loss.

One knee bracing web plate has a 1" x 1" hole. Heavy rusting with laminar corrosion was observed on the interior of both columns. The west vertical column plate has a 6" x 1½" hole.

- Pier Bent 22 columns exhibit light rusting in areas of paint system failure on the exterior surface. Pack rusting between anchor bolts and stiffener plates was observed. One stiffener plate is bent. Heavy rusting with laminar corrosion was observed on the interior of the both columns. The westerly column interior vertical plate has a 9½" x 1½" hole.
- Pier Bent 23 columns exhibit paint system failure with light to moderate rusting. W-shaped lateral bracing members have some section loss. Lateral bracing connection plates have pack rust with prying. Both bottom lateral bracing plates exhibit moderate to heavy rusting with laminar corrosion along with up to 100% rivet head section loss. One lower diagonal lateral brace has approximately 50% section loss over the end 7" of the flange. Base plate anchor bolts exhibit up to 60% section loss and pack rusting between anchor bolts and stiffener plates was observed. The cross beam top and bottom flange angles exhibit moderate rusting.
- Pier Bent 24 columns exhibit paint system failure with light to moderate rusting. Flange and web pitting was observed approximately 4 feet from the bottom of the easterly column. The lower horizontal strut member web and flange exhibit light pitting. Column base plates exhibit rusting with some laminar corrosion and pitting. Pack rusting between anchor bolts and stiffener plates and base plate rivet head loss was also observed. Bottom lateral bracing connection plates exhibit pack rust with prying. The concrete pedestals exhibit cracking with rust staining.
- Pier Bent 25 columns exhibit paint system failure with light to moderate rusting. Column base plates exhibit rusting with some laminar corrosion and pitting. Pack rust between the east column and base plate members was also observed. Pack rust with prying action was observed at the lateral bracing angle and connection plate interface. The cross beam top and bottom flange angles exhibit moderate rusting with laminar corrosion and section loss. Rivet head losses of up to 50% were observed at cross beam to column connections and at various locations along the cross beam bottom flange angles. The west cross beam cantilever tension tie plate has up to 40% rivet head loss. The concrete pedestal exhibits cracking, delamination and spalling with exposed reinforcement.
- Pier Bent 26 columns exhibit paint system failure with light to moderate rusting. Lateral bracing members also exhibit moderate to heavy rusting with laminar corrosion. Base plate anchor bolts exhibit up to 50% section loss. The east lower lateral bracing connection plate exhibits moderate pitting with rivet head loss. Light rusting of the cross beam top flange was observed. Rivet head losses were observed at various locations along the cross beam flange angles.

Refer to Appendix C for detailed steel bent condition sketches.

FRACTURE CRITICAL INSPECTION

IDENTIFICATION OF FRACTURE CRITICAL MEMBERS

Type of FCM:	Quantity:
Steel Riveted Built-Up Deck Girder – Roadway Approach	44
Steel Riveted Built-Up Deck Girder – Railroad Approach	12
Steel Riveted Built-Up Floorbeams – Roadway Approach Spans	85
Steel Riveted Built-Up Floorbeams – Truss Spans	45
Steel Riveted Built-Up Cross Beams – Steel Bents	8
Steel Riveted Truss Bottom Chords	40
Steel Riveted Truss Top Chords	2
Steel Riveted Truss Diagonals	20
Steel Riveted Truss Verticals	30

IDENTIFICATION OF FRACTURE CRITICAL MEMBERS – ROADWAY APPROACH SPANS 1-13

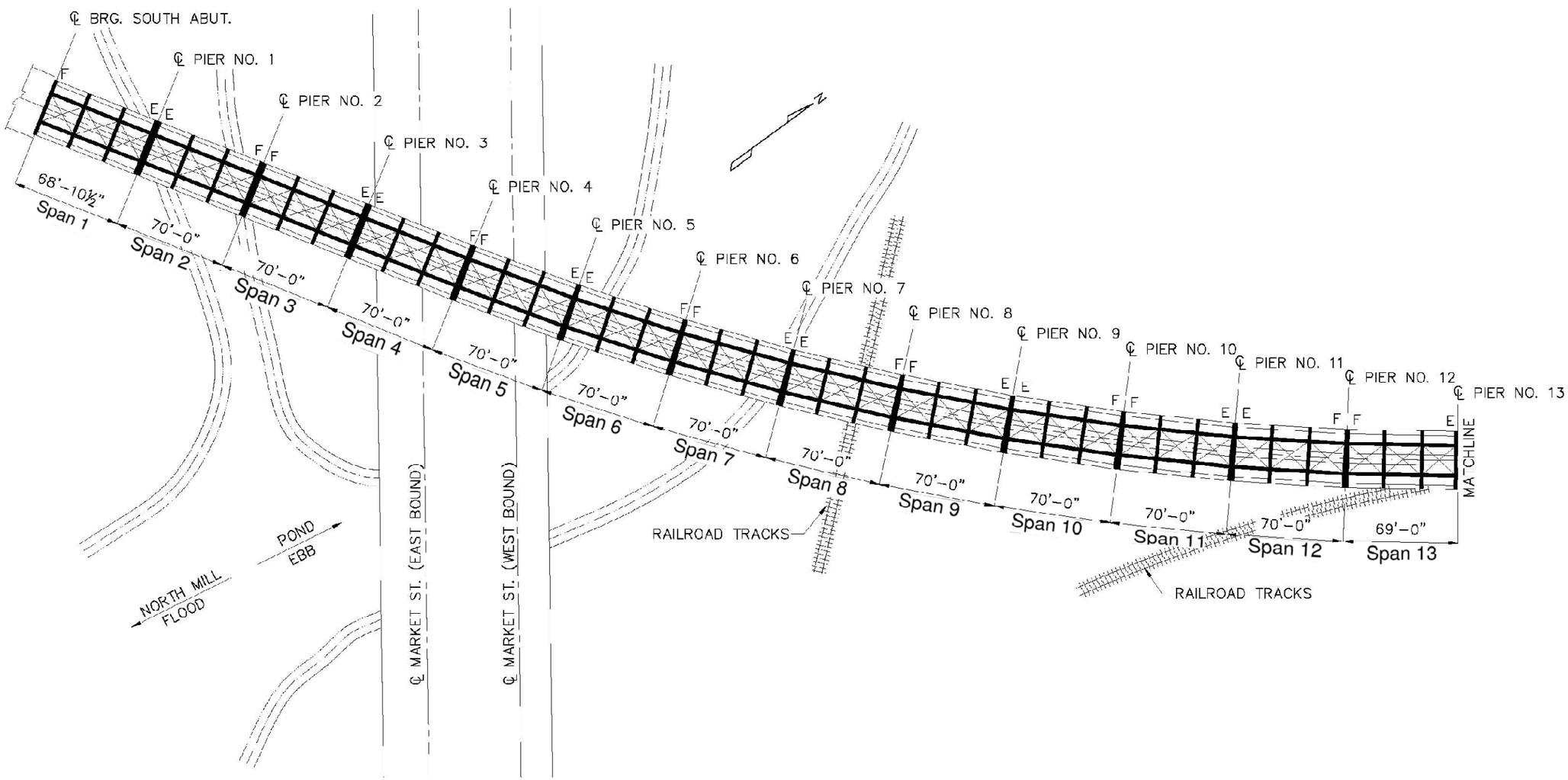

LEGEND:

E – EXPANSION JOINT
F – FIXED JOINT
▬ Fracture Critical Member

IDENTIFICATION OF FRACTURE CRITICAL MEMBERS – ROADWAY APPROACH SPANS 14, 15 AND 21-27

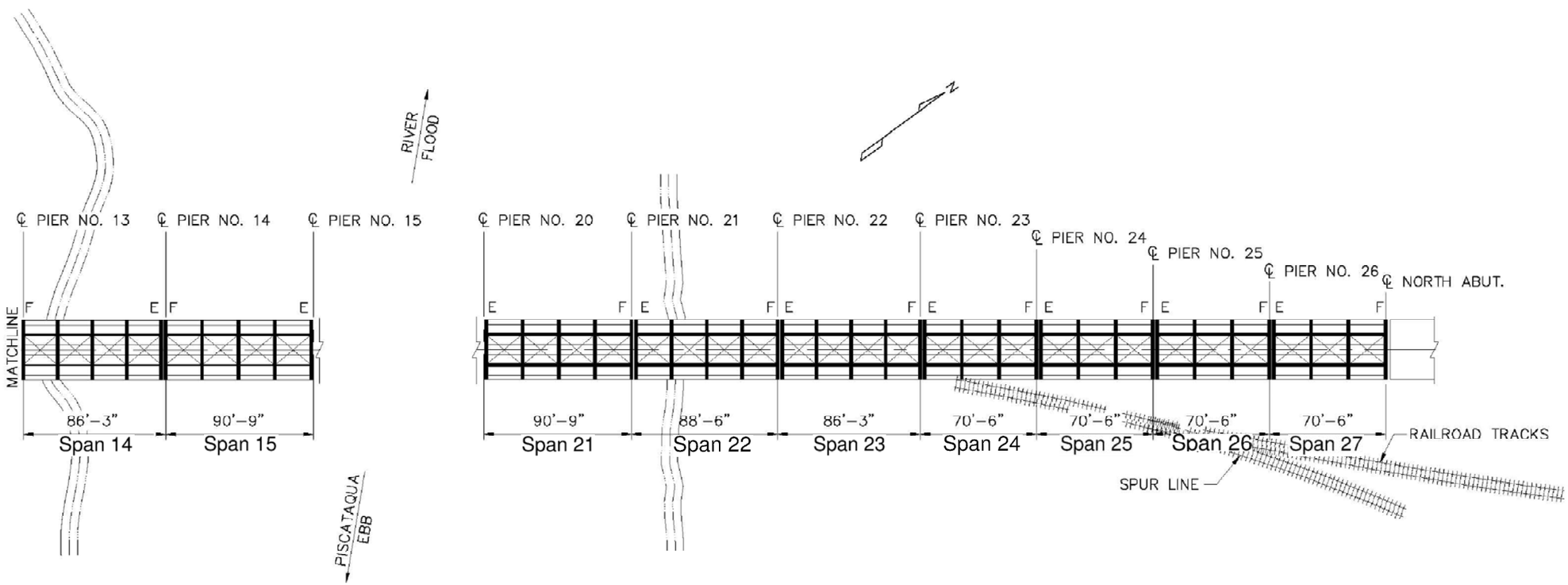

LEGEND:

E – EXPANSION JOINT
F – FIXED JOINT
▬ Fracture Critical Member

IDENTIFICATION OF FRACTURE CRITICAL MEMBERS – TRUSS ELEVATION

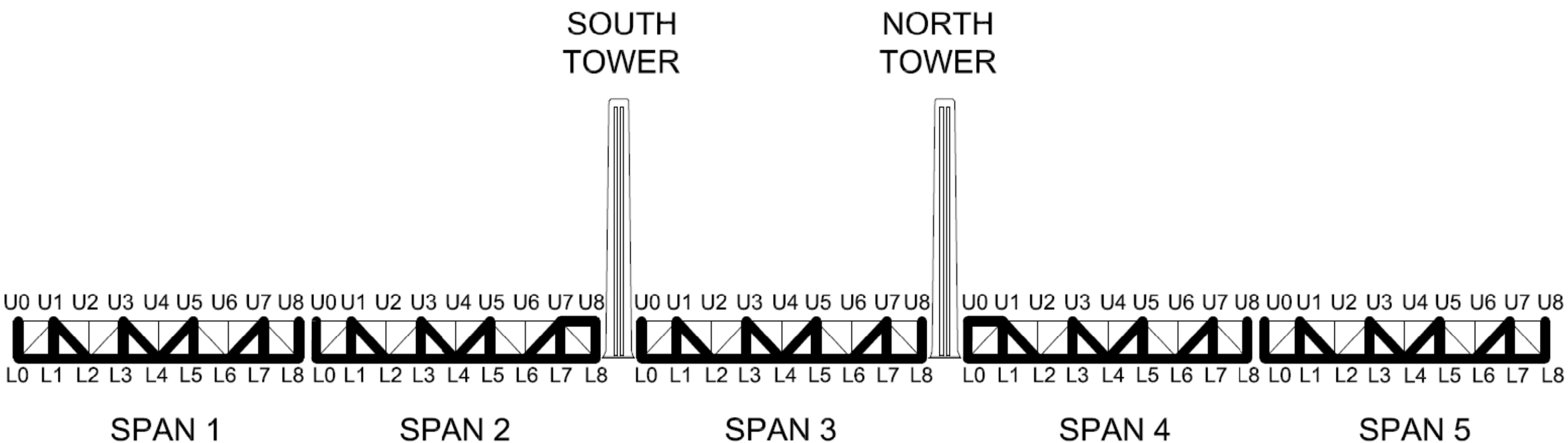

Fracture Critical Member

IDENTIFICATION OF FRACTURE CRITICAL MEMBERS – TRUSS FLOOR SYSTEM

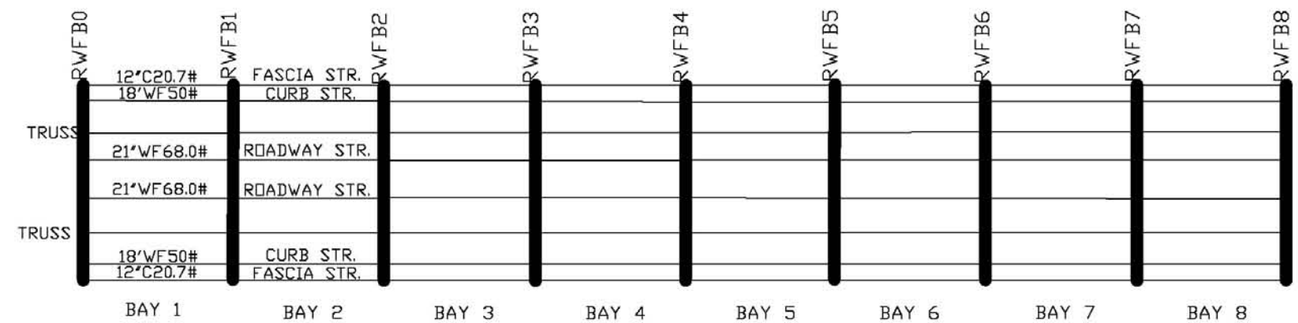

TOP DECK FLOOR SYSTEM

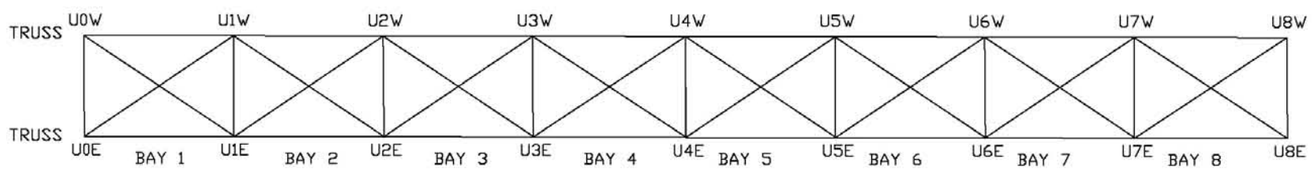

TOP LATERAL BRACING SYSTEM

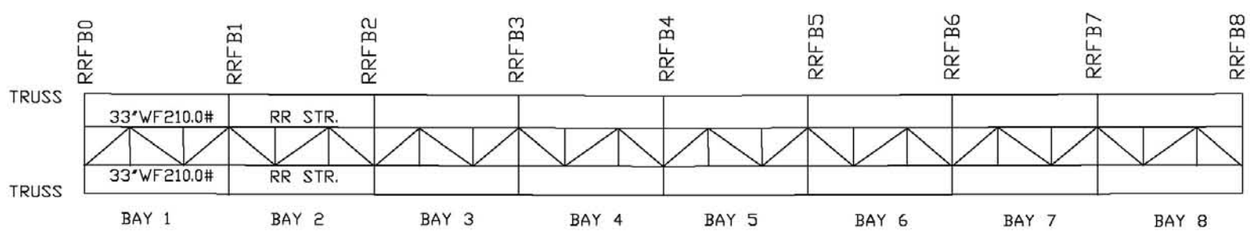

BOTTOM DECK FLOOR SYSTEM

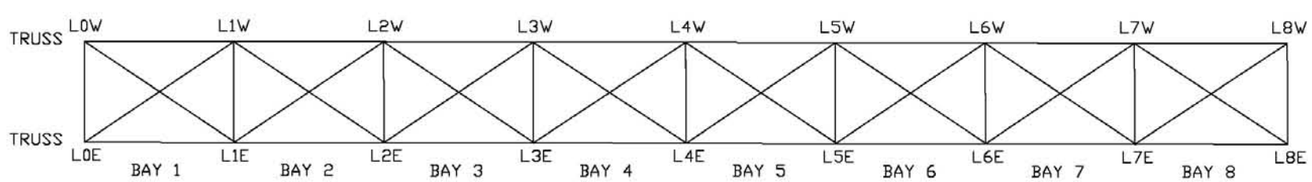

BOTTOM LATERAL BRACING SYSTEM

— Fracture Critical Member

FRACTURE CRITICAL INSPECTION PROCEDURES

Steel Riveted Built-Up Floorbeams and Cross Girders:

1. Check all rivets and bolts to determine that they are tight and that the individual components are operating as one. Check for cracked or missing bolts, rivets and rivet heads

   Findings: Although rivet heads have section losses in some locations, all individual components are operating as one.

2. Check the member for misplaced holes or repaired holes that have been filled with weld metal. These are possible sources of fatigue cracking.

   Findings: On the lower floor system of the truss spans, there are drilled holes in the top flanges of floorbeams at midspan. No cracks were observed propagating from these holes.

3. Check the area around the floorbeam and lateral bracing connections for cracking in the web due to out-of-plane bending.

   Findings: No cracks were found in the webs due to out-of-plane bending.

4. Check the entire length of the tension flanges and web for cracking, which may have originated from corrosion, pitting, section loss, or defects in fabrication (e.g., nicks and gouges in the steel).

   Findings: There is some isolated corrosion, pitting and section loss on the floorbeam webs and tension flanges. No cracks propagating from corrosion were found.

5. Check the entire length of temporary erection welds, tack welds, welded connections not shown on the design drawings or other miscellaneous welds used in either construction or repair as these are possible sources of cracks.

   Findings: Welds were found on the Floorbeam Overhangs at the tie plates. No cracks propagating from welds were found.

Steel Riveted Truss and Tower Members:

1. Check each component to see that the loads are being evenly distributed between them by attempting to vibrate the member by hand, and that batten plates and lacing are tight.

   Findings: Although rivet heads have section losses in some locations, all individual components are operating as one.

2. Check carefully along the first row of rivets for cracking as the first row carries more load than succeeding rows. The first row is the row closest to the edge of the gusset plate and perpendicular to the axis of the member.

   Findings: No cracks were observed.

3. Check for nicks, gouges and tears due to the impact from passing vehicular or marine traffic. This type of damage can initiate future cracks.

   Findings: No nicks, gouges and tears were observed.

4. Observe carefully any tack welding used either in construction or repair as this is a potential source of cracks. Any tack welds should be flagged to the attention of the bridge engineer in the report for future observation and consideration in stress rating.

   Findings: There are several locations with welded connections, primarily utility connections to the bottom chord. No cracks were observed at repair welds.

5. If any misplaced holes or holes used for reconstruction have been plug welded, check carefully for fatigue cracks.

   Findings: There are numerous holes drilled for utility connections. These holes were covered by repair plates or by washers and bolts. No cracks were observed outside of the area covered by washers at the hole locations.

IDENTIFICATION OF FATIGUE SENSITIVE DETAILS (FSD)

FSD 14 - Base metal at details connected with transversely loaded welds, with the welds perpendicular to the direction of stress:

Vertical welds on truss bottom chords where electric conduit supports are welded.

FSD 17 - Base metal adjacent to details attached by longitudinally loaded fillet welds:

Horizontal welds on truss bottom chords where electric conduit supports are welded. Welds connecting the tie plate to the top flange of the Floorbeam Overhangs.

FSD 21 - Base metal at net section of riveted connections:

All fracture critical members.

Quantity of FSD Types: 3

IDENTIFICATION OF FATIGUE SENSITIVE DETAILS (FSD)

General Condition	Situation	Detail Category	Illustrative Example; See Figure 6.6.1.2.3-1
Plain Members	Base metal:		1, 2
	• With rolled or cleaned surfaces; flame-cut edges with *AASHTO/AWS D1.5M/D1.5* (Section 3.2.2) smoothness of 1,000 μ-in. or less	A	
	• Of unpainted weathering steel, all grades, designed and detailed in accordance with FHWA (*1989*)	B	
	• At net section of eyebar heads and pin plates	E	
Builtup Members	Base metal and weld metal in components, without attachments, connected by:		3, 4, 5, 7
	• Continuous full-penetration groove welds with backing bars removed, or	B	
	• Continuous fillet welds parallel to the direction of applied stress	B	
	• Continuous full-penetration groove welds with backing bars in place, or	B′	
	• Continuous partial-penetration groove welds parallel to the direction of applied stress	B′	
	Base metal at ends of partial-length cover plates:		
	• With bolted slip-critical end connections	B	22
	• Narrower than the flange, with or without end welds, or wider than the flange with end welds ○ flange thickness ≤0.8 in. ○ flange thickness >0.8 in.	 E E′	7
	• Wider than the flange without end welds	E′	
Groove-Welded Splice Connections with Weld Soundness Established by NDT and All Required Grinding in the Direction of the Applied Stresses	Base metal and weld metal at full-penetration groove-welded splices:		
	• Of plates of similar cross-sections with welds ground flush	B	8, 10
	• With 2.0 ft. radius transitions in width with welds ground flush	B	13
	• With transitions in width or thickness with welds ground to provide slopes no steeper than 1.0 to 2.5 ○ grades 100/100W base metal ○ other base metal grades	 B′ B	11, 12
	• With or without transitions having slopes no greater than 1.0 to 2.5 when weld reinforcement is not removed	C	8, 10, 11, 12

From AASHTO LRFD Bridge Specifications, 4th Edition, Table 6.1.2.3-1

IDENTIFICATION OF FATIGUE SENSITIVE DETAILS (FSD)

General Condition	Situation	Detail Category	Illustrative Example; See Figure 6.6.1.2.3-1
Longitudinally Loaded Groove-Welded Attachments	Base metal at details attached by full- or partial-penetration groove welds:		
	• When the detail length in the direction of applied stress is:		
	○ less than 2.0 in.	C	6, 15
	○ between 2.0 in. and 12 times the detail thickness, but less than 4.0 in.	D	15
	○ greater than either 12 times the detail thickness or 4.0 in.		
	—detail thickness <1.0 in.	E	15
	—detail thickness ≥1.0 in.	E′	15
	• With a transition radius with the end welds ground smooth, regardless of detail length:		16
	○ transition radius ≥24.0 in.	B	
	○ 24.0 in. > transition radius ≥ 6.0 in.	C	
	○ 6.0 in. > transition radius ≥ 2.0 in.	D	
	○ transition radius <2.0 in.	E	
	• With a transition radius with end welds not ground smooth	E	16
Transversely Loaded Groove-Welded Attachments with Weld Soundness Established by NDT and All Required grinding Transverse to the Direction of Stress	Base metal at detail attached by full-penetration groove welds with a transition radius:		16
	• With equal plate thickness and weld reinforcement removed:		
	○ transition radius ≥24.0 in.	B	
	○ 24.0 in. > transition radius ≥ 6.0 in.	C	
	○ 6.0 in. > transition radius ≥ 2.0 in.	D	
	○ transition radius <2.0 in.	E	
	• With equal plate thickness and weld reinforcement not removed:		
	○ transition radius ≥6.0 in.	C	
	○ 6.0 in. > transition radius ≥ 2.0 in.	D	
	○ transition radius <2.0 in.	E	
	• With unequal plate thickness and weld reinforcement removed:		
	○ transition radius ≥2.0 in.	D	
	○ transition radius <2.0 in.	E	
	• For any transition radius with unequal plate thickness and weld reinforcement not removed	E	
Fillet-Welded Connections with Welds Normal to the Direction of Stress	Base metal:		
	• At details other than transverse stiffener-to-flange or transverse stiffener-to-web connections	Lesser of C or Eq. 6.6.1.2.5-3	14
	• At the toe of transverse stiffener-to-flange and transverse stiffener-to-web welds	C′	6
Fillet-Welded Connections with Welds Normal and/or Parallel to the Direction of Stress	Shear stress on the weld throat Base metal at end of weld	E	9

From AASHTO LRFD Bridge Specifications, 4th Edition, Table 6.1.2.3-1

IDENTIFICATION OF FATIGUE SENSITIVE DETAILS (FSD)

General Condition	Situation	Detail Category	Illustrative Example; See Figure 6.6.1.2.3-1
Longitudinally Loaded Fillet-Welded Attachments	Base metal at details attached by fillet welds:		
	• When the detail length in the direction of applied stress is:		
	○ less than 2.0 in. or stud-type shear connectors	C	15, 17, 18, 20
	○ between 2.0 in. and 12 times the detail thickness, but less than 4.0 in.	D	15, 17
	○ greater than either 12 times the detail thickness or 4.0 in.		7, 9, 15, 17
	—detail thickness <1.0 in.	E	
	—detail thickness ≥1.0 in.	E′	
	• With a transition radius with the end welds ground smooth, regardless of detail length		16
	○ transition radius ≥2.0 in.	D	
	○ transition radius <2.0 in.	E	
	• With a transition radius with end welds not ground smooth	E	16
Transversely Loaded Fillet-Welded Attachments with Welds Parallel to the Direction of Primary Stress	Base metal at details attached by fillet welds:		16
	• With a transition radius with end welds ground smooth:		
	○ transition radius ≥2.0 in.	D	
	○ transition radius <2.0 in.	E	
	• With any transition radius with end welds not ground smooth	E	
Mechanically Fastened Connections	Base metal:		21
	• At gross section of high-strength bolted slip-critical connections, except axially loaded joints in which out-of-plane bending is induced in connected materials	B	
	• At net section of high-strength bolted nonslip-critical connections	B	
	• At net section of riveted connections	D	
Eyebar or Pin Plates	Base metal at the net section of eyebar head, or pin plate	E	23, 24
	Base metal in the shank of eyebars, or through the gross section of pin plates with:		
	• Rolled or smoothly ground surfaces	A	23, 24
	• Flame-cut edges	B	23, 24

From AASHTO LRFD Bridge Specifications, 4th Edition, Table 6.1.2.3-1

IDENTIFICATION OF FATIGUE SENSITIVE DETAILS (FSD)

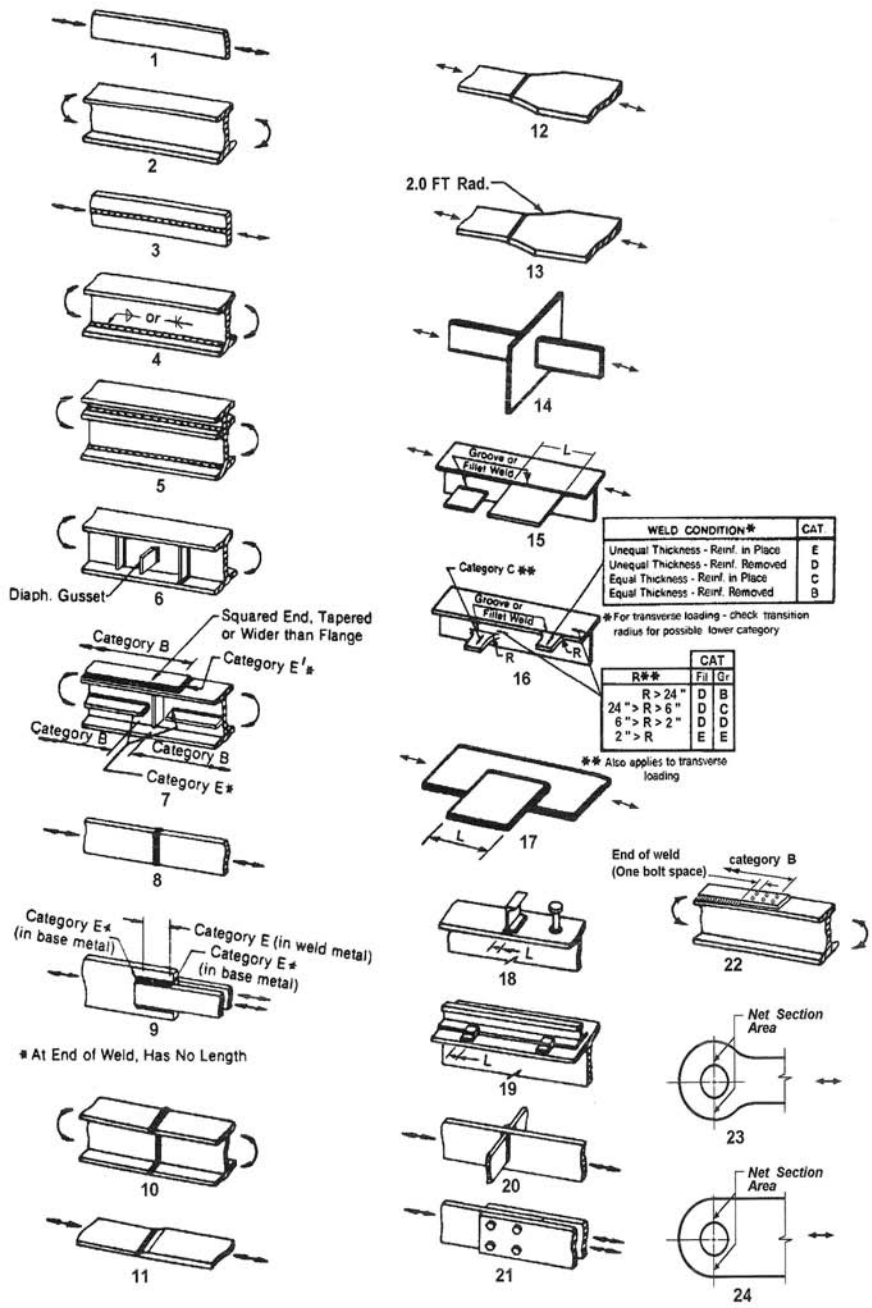

WELD CONDITION*	CAT.
Unequal Thickness - Reinf. in Place	E
Unequal Thickness - Reinf. Removed	D
Equal Thickness - Reinf. in Place	C
Equal Thickness - Reinf. Removed	B

* For transverse loading - check transition radius for possible lower category

R**	CAT Fil	CAT Gr
R > 24"	D	B
24" > R > 6"	D	C
6" > R > 2"	D	D
2" > R	E	E

** Also applies to transverse loading

Figure 6.6.1.2.3-1 Illustrative Examples.

From AASHTO LRFD Bridge Specifications, 4th Edition, Table 6.1.2.3-1

APPENDICES

Appendix A: Inspection Forms

Appendix B: Photos

Section I: Superstructure and Deck - Roadway Approach Spans

Section II: Superstructure, Deck and Towers - Truss Spans

Section III: Superstructure and Deck - Railroad Approach Spans

Section IV: Bearings

Section V: Substructure

Section VI: Wearing Surfaces and Bridge Railing

Appendix C: Condition Summary Tables and Sketches

Part I – Truss Spans

- Section A: Truss Member Condition
- Section B: Gusset Plate Condition
- Section C: Typical Stringer Condition
- Section D: Typical Floorbeam Condition

Part II – Approach Spans

- Section A: Girder Condition
- Section B: Floorbeam Condition
- Section C: Stringer Condition
- Section D: Pier Bents 21-26 Condition

New Hampshire Department of Transportation

IN-DEPTH INSPECTION AND CONDITION REPORT FOR THE SARAH MILDRED LONG BRIDGE OVER THE PISCATAQUA RIVER

251/108

December 2009

PREPARED BY:

HDR Engineering, Inc.
695 Atlantic Ave 2FL
Boston, MA 02111

Hoyle, Tanner & Associates, Inc.
150 Dow Street
Manchester, NH 03101

STATE OF NEW HAMPSHIRE
LORETTA GIRARD DOUGHTY
No. 08820
LICENSED
PROFESSIONAL ENGINEER

12-21-09

VOLUME 2 OF 2

TABLE OF CONTENTS

VOLUME 1 OF 2

SECTION

LOCATION MAP	1
DESCRIPTION OF BRIDGE	2
BRIDGE ELEVATION	3
BRIDGE ELEVATION – TRUSS SPANS	4
BRIDGE FRAMING PLAN – ROADWAY APPROACH SPANS 1-13	5
BRIDGE FRAMING PLAN – ROADWAY APPROACH SPANS 14, 15 AND 21-27	6
TYPICAL BRIDGE FRAMING PLAN – ROADWAY APPROACH SPANS 1-13, 24-27	7
TYPICAL BRIDGE FRAMING PLAN – ROADWAY APPROACH SPANS 14, 15, 21-23	8
TYPICAL BRIDGE FRAMING PLAN – TRUSS SPANS	9
TYPICAL BRIDGE FRAMING PLAN – TOWER ELEVATION	10
TYPICAL BRIDGE FRAMING PLAN – RAILROAD APPROACH SPANS	11
TYPICAL BRIDGE CROSS SECTION – ROADWAY APPROACH SPANS	12
TYPICAL BRIDGE CROSS SECTION – TRUSS SPANS	13
TYPICAL BRIDGE RAILROAD DECK CROSS SECTION	14
CROSS SECTION – RETRACTABLE RAILROAD APPROACH SPAN 21	15
INSPECTION FINDINGS	16
FRACTURE CRITICAL INSPECTION	35

APPENDIX A – INSPECTION FORMS

APPENDIX B – PHOTOS

APPENDIX C – CONDITION SUMMARY TABLES AND SKETCHES

VOLUME 2 OF 2

REPORTS

PIN INSPECTION TECHNICAL REPORT

UNDERWATER INSPECTION REPORT

CONCRETE CHARACTERIZATION AND CONDITION ASSESSMENT

MECHANICAL AND ELECTRICAL INSPECTION REPORT

Pin Inspection Technical Report

Sarah Mildred Long Bridge Pin Inspection
Technical Report

Prepared for:
HDR Inc.
3 Gateway Center 3 Floor
Pittsburgh, PA 15222-1074
(412) 497-6000

Inspected by:

2134 Sandy Drive STE 14
State College, PA 16803

Ethan Ray
Field Engineer

Approved by
Thomas R Hay, PhD
ASNT UT Level III
Certificate no. 107162

6/10/2009

Executive Summary

Nondestructive inspection of the eight lift cable pins on the US Route One Bypass road deck and the 16 end panel bearing pins on the lower railroad deck of the Sarah Mildred Long Bridge was performed using phased array ultrasound. No significant defects, wear, or corrosion were detected in 20 of the 24 pins. Advanced corrosion was detected in one pin, with a circumferential length of approximately two inches that penetrated approximately ¼ inch into the volume of the pin. The total cross-sectional area of the material loss due to this corrosion was estimated to be 0.5 in^2. Due to the presence of advanced corrosion in one of the lift cable pins, and minor corrosion on three others, it is recommended that the eight lift cable pins be re-inspected every two years in conjunction with the routine bridge inspection to determine at what rate the pin cross-section is decreasing. Due to the lack of reflectors found in the end panel bearing pins it is recommended to re-inspect these pins every four years.

Table 1: Bridge Pin Inspection Summary

Pin ID	UT Findings	Recommendation	Pin ID	UT Findings	Recommendation
Rt1-NB17T	Reflector Free	Re-inspect at two year interval	Rt1-SB17T	Largest Reflector **Exceeded DAC** @ 8.5”, 180° Est. area: 0.5 in^2	Re-inspect at two year interval
Rt1-NB17B	Reflector Free	Re-inspect at two year interval	Rt1-SB17B	Largest Reflector @ 7.5”, 0°	Re-inspect at two year interval
Rt1-NB18T	Largest Reflector @ 7.5”, 200°	Re-inspect at two year interval	Rt1-SB18T	Reflector Free	Re-inspect at two year interval
Rt1-NB18B	Reflector Free	Re-inspect at two year interval	Rt1-SB18B	Largest Reflector @ 7.5”, 0°	Re-inspect at two year interval
RR-NB20S	Reflector Free	Re-inspect at four year interval	RR-SB20S	Reflector Free	Re-inspect at four year interval
RR-NB19N	Reflector Free	Re-inspect at four year interval	RR-SB19N	Reflector Free	Re-inspect at four year interval
RR-NB19S	Reflector Free	Re-inspect at four year interval	RR-SB19S	Reflector Free	Re-inspect at four year interval
RR-NB18N	Reflector Free	Re-inspect at four year interval	RR-SB18N	Reflector Free	Re-inspect at four year interval
RR-NB17S	Reflector Free	Re-inspect at four year interval	RR-SB17S	Reflector Free	Re-inspect at four year interval
RR-NB16N	Reflector Free	Re-inspect at four year interval	RR-SB16N	Reflector Free	Re-inspect at four year interval
RR-NB16S	Reflector Free	Re-inspect at four year interval	RR-SB16S	Reflector Free	Re-inspect at four year interval
RR-NB15N	Reflector Free	Re-inspect at four year interval	RR-NB15N	Reflector Free	Re-inspect at four year interval

Table of Contents

Executive Summary i
Table of Contents ii
Table of Figures ii
1. Introduction 1
  1.1. Bridge Nomenclature 1
  1.2. Ultrasound Equipment 2
2. Procedure 2
  2.1. Calibration 2
  2.2. Pin Preparation 4
  2.3. Probe Movement/Scanning Procedure 5
  2.4. Scanning Sensitivity 5
  2.5. Storing Inspection Data 6
3. Results – Cable Lift Pins 7
  3.1. Reflector Free Pin 7
  3.2. Reflectors Found 7
  3.3. Pin Findings Summary 8
4. Results – End Panel Bearing Pins 9
  4.1. Reflector Free Pin 9
5. Summary 11

Table of Figures

Figure 1: Bridge schematic with pin locations highlighted 1
Figure 2: Influence of distance on ultrasonic signal. 3
Figure 3: End view of the calibration specimen 3
Figure 4: WINS' bridge pin calibration block with three $^{1}/_{8}$" x ¾" holes 4
Figure 5: Pin after grinding and prepped for inspection 4
Figure 6: Probe scanning procedure 5
Figure 7: Comparison of reflection at 15 dB (left) and 9 dB (right) 6
Figure 8: S-scan (left) and A-scan (right) from a reflector free cable lift pin 7
Figure 9: A-scan of the reflector that exceeded the DAC 8
Figure 10: Representative A-scan of reflectors that did not break the DAC 8
Figure 11: S-scan (left) and A-scan (right) from a reflector free end panel bearing pin 9

1. Introduction

The Sarah Mildred Long Bridge is the Route One Bypass Bridge that crosses the Piscataqua River between Portsmouth, NH and Kittery, ME. The areas of interest on the bridge were the eight lift cable pins on the Route One Bypass road deck and the 16 end panel bearing pins on the lower railroad deck. The pin locations are shown in Figure 1.

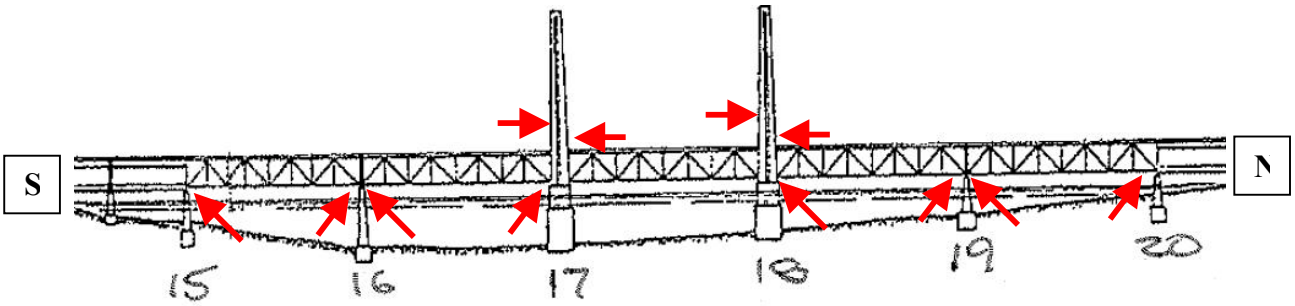

Figure 1: Bridge schematic with pin locations highlighted

1.1. Bridge Nomenclature

The Sarah Mildred Long Bridge consisted of 24 pins, eight lift cable pins and 16 bearing pins. The lift cable pins were located on the Route One Bypass road deck, while the bearing pins were located on the lower railroad deck. The following pin nomenclature is used throughout this report: Deck (Rt1 or RR) - Direction (northbound or southbound), Pier number, Location (north/south or top/bottom). Using this nomenclature, the top cable pin on the road deck on the first northbound lift tower was labeled as Rt1-NB17T. The abbreviations used are defined as follows:

- Rt1 = Route 1 Car Deck
- RR = Railroad Deck
- NB = Northbound
- SB = Southbound
- ## = Pier Number
- T = Top
- B = Bottom
- N = North
- S = South

Table 2: Summary of pins tested

Northbound (East) Side of Bridge	Southbound (West) Side of Bridge
Rt1-NB17T	Rt1-SB17T
Rt1-NB17B	Rt1-SB17B
Rt1-NB18T	Rt1-SB18T
Rt1-NB18B	Rt1-SB18B
RR-NB20S	RR-SB20S
RR-NB19N	RR-SB19N
RR-NB19S	RR-SB19S
RR-NB18N	RR-SB18N
RR-NB17S	RR-SB17S
RR-NB16N	RR-SB16N
RR-NB16S	RR-SB16S
RR-NB15N	RR-NB15N

1.2. Ultrasound Equipment

A Harfang X-32 ultrasonic phased array instrument was used for inspection of the bridge pins. A phased array system has is advantageous to conventional ultrasound as it provides full volumetric coverage from limited sensor positions. The ability to sweep ultrasonic angles minimizes the requirement for transducer wedges thus reducing the time required to scan each pin. A 2.25 MHz transducer was selected for the required sensitivity and depth of penetration.

2. Procedure

Following is a description of the pin inspection procedure carried out by the inspector. The pins were accessed without the aid of any advanced access methods, such as rope or snooper truck; however, fall protection practices were followed when required.

2.1. Calibration

Before each inspection, the ultrasonic phased array instrument was calibrated using WINS' calibration block shown in Figure 3 and Figure 4. A Distance Amplitude Correction (DAC) curve was set up using the ⅛ inch side drilled holes located at 1.4, 4.0, and 6.7 inches from the scanning surface. The DAC curve is used to correct the amplitude of same size reflectors at different depths in the pin. For instance, in Figure 2 there are two equivalent sized reflectors at different depths in the pin. Naturally, the closest reflector will reflect ultrasound with greater amplitude since attenuation increases with propagation distance. While the second reflector is the same size, it will reflect less ultrasound and may be mistakenly interpreted as a smaller reflector. The DAC curve is used to compensate for attenuation of ultrasound in the pin and to assist in the reliable interpretation and sizing of internal reflectors.

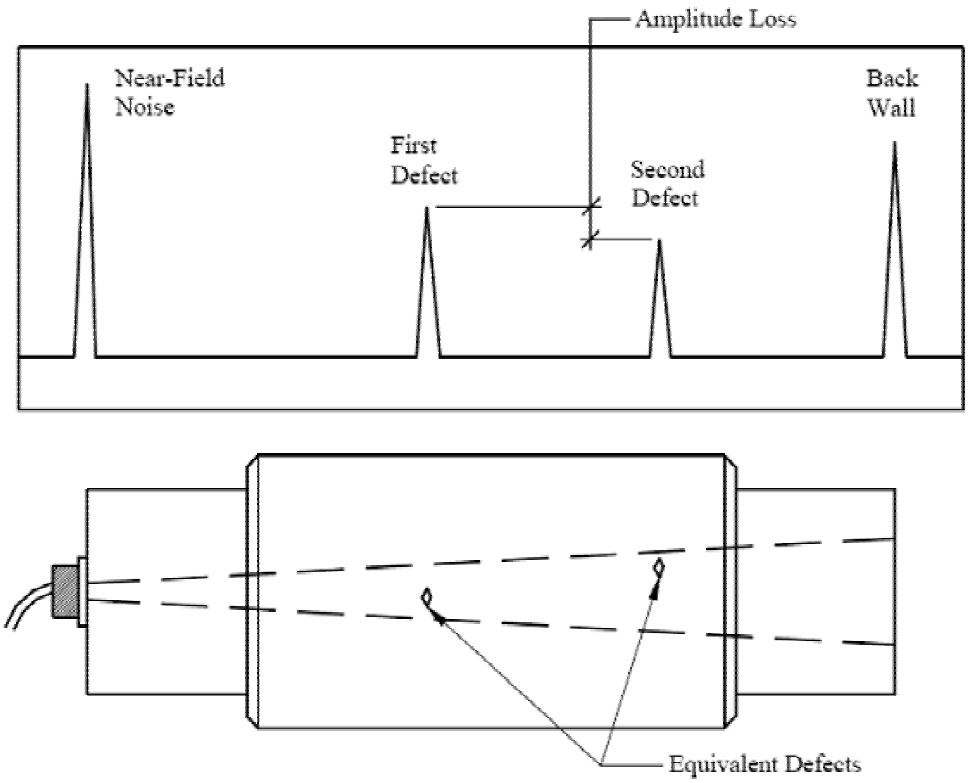

Figure 2: Influence of distance on ultrasonic signal.

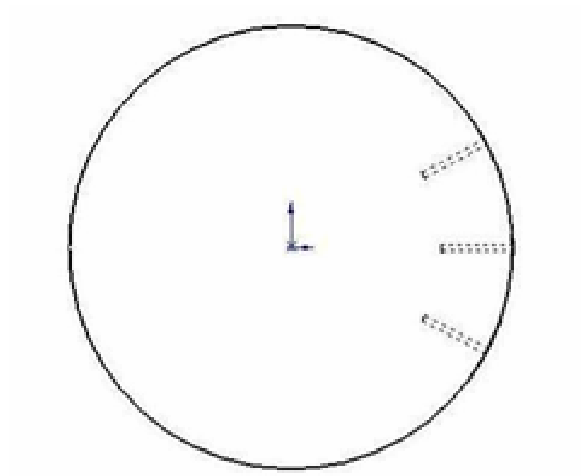

Figure 3: End view of the calibration specimen

Figure 4: WINS' bridge pin calibration block with three $^{1}/_{8}$" x ¾" holes

2.2. Pin Preparation

Each pin was prepared for inspection to ensure that ultrasound was coupled efficiently from the transducer in to the steel pin. Paint and scale was observed on most pins. The faces of the pins were ground down to bare metal before inspection. A prepared pin is shown in Figure 5. After the face was prepared, ultrasound couplant gel was applied evenly over the face of the pin.

Figure 5: Pin after grinding and prepped for inspection

2.3. Probe Movement/Scanning Procedure

The top of each pin (0 degrees) was chosen as the angular reference point for scanning. The probe was positioned at the center of the pin so that the phased array volumetric scan was parallel to the transducer scan path. The back wall echo was maximized. The transducer was then scanned in the radial direction towards the edge of pin. The back wall amplitude was monitored so that if the amplitude dropped by more than six dB, then the section would be rescanned. If there were no observable reflections between the main bang and the back wall, the procedure was repeated at 45° increments from the angular reference point until the scanning pattern shown in Figure 6 was completed.

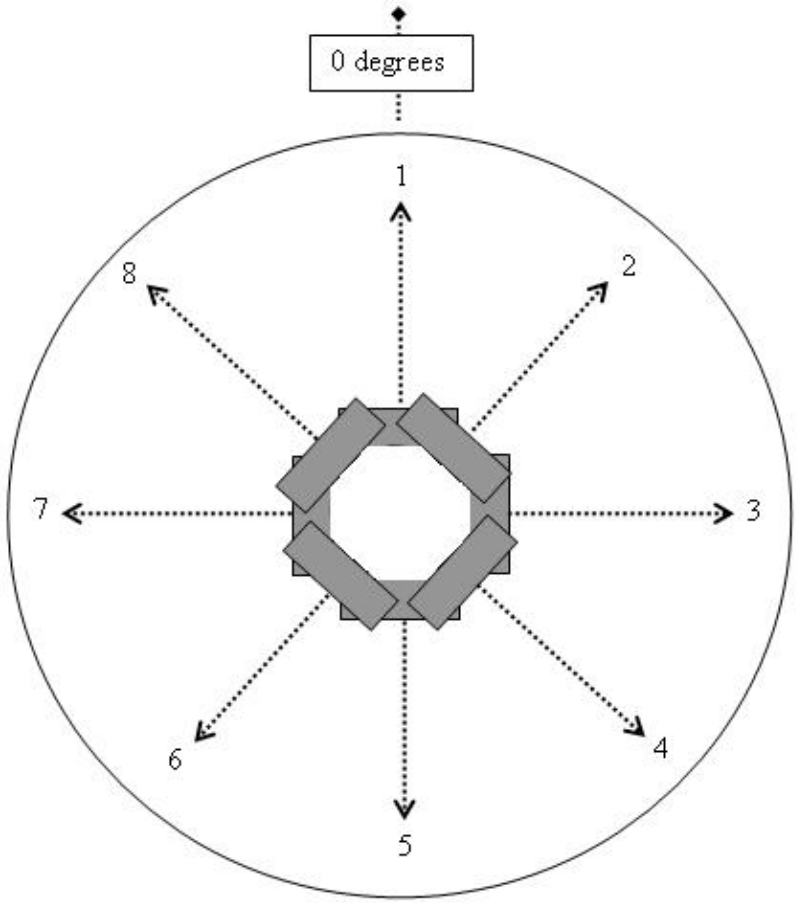

Figure 6: Probe scanning procedure

2.4. Scanning Sensitivity

The transducer gain during the inspection was three to six dB higher than transducer gain established during the calibration procedure (reference gain). The reason for scanning at a higher gain than the reference gain is to make interpretation easier as shown in Figure 7. Once a reflector was found the gain was lowered to the reference gain and the reflection was compared to the calibration DAC.

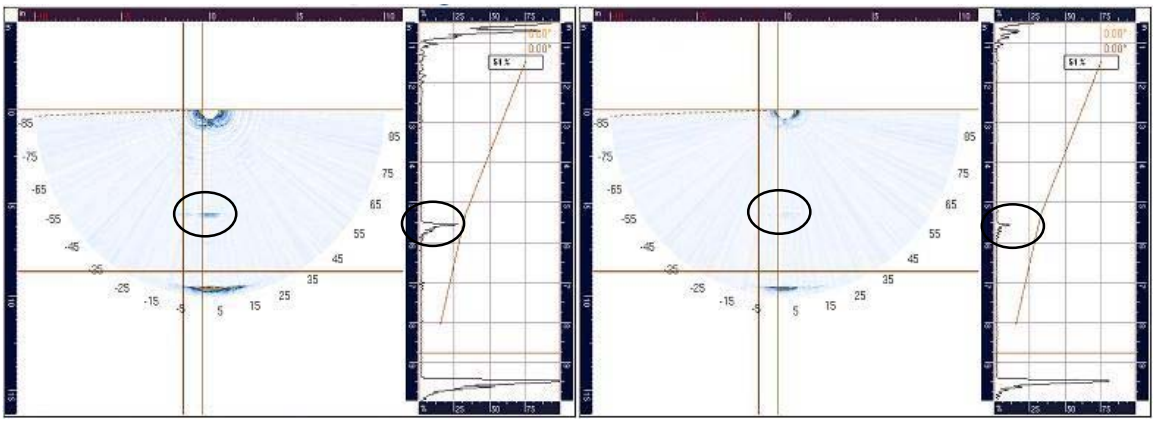

Figure 7: Comparison of reflection at 15 dB (left) and 9 dB (right)

2.5. Storing Inspection Data

At least one data file was stored for all pins tested. When a reflector was found the following three files were saved for each pin:

1) A-scan at 0 degrees and gain at the higher scanning level
2) A-scan at 0 degrees and gain at the lower, calibration level
3) A-scan lined up on point of maximum reflection and gain at the lower, calibration level (for DAC comparison).

3. Results – Cable Lift Pins

3.1. Reflector Free Pin

Four of the eight cable lift pins inspected on the Sarah Mildred Long Bridge had no internal reflectors other than the near threads, far shoulder and back wall. The Sector scan (S-scan) and Amplitude scan (A-scan) of one pin Rt1-NB17T are shown in Figure 8. All pins not mentioned in this section are cleared as *Reflector Free Pins* and behaved in this manner.

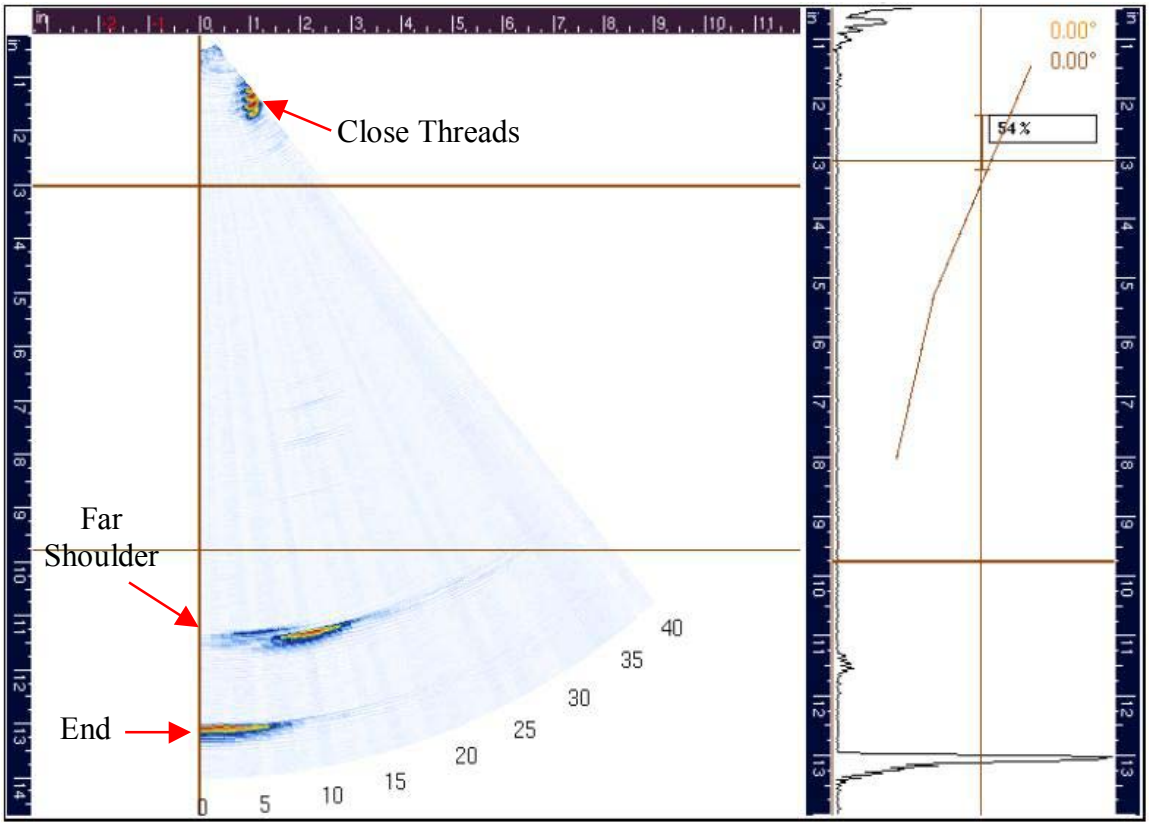

Figure 8: S-scan (left) and A-scan (right) from a reflector free cable lift pin

3.2. Reflectors Found

Reflectors were found in four of the eight cable lift pins. The largest reflector found was in pin Rt1-SB17T. At 8.5 inches from the near face the reflection broke the DAC, as is shown in Figure 9. Based on probe movement and measurement techniques it is estimated that the reflection represents an area of corrosion of approximately two inches in circumferential length that penetrates ¼ inch into the volume of the pin. The total cross-sectional area of the corrosion, or material loss, is estimated to be 0.5 in^2. Three other cable lift pins had reflectors however, none exceeded the DAC. An example is shown in Figure 10.

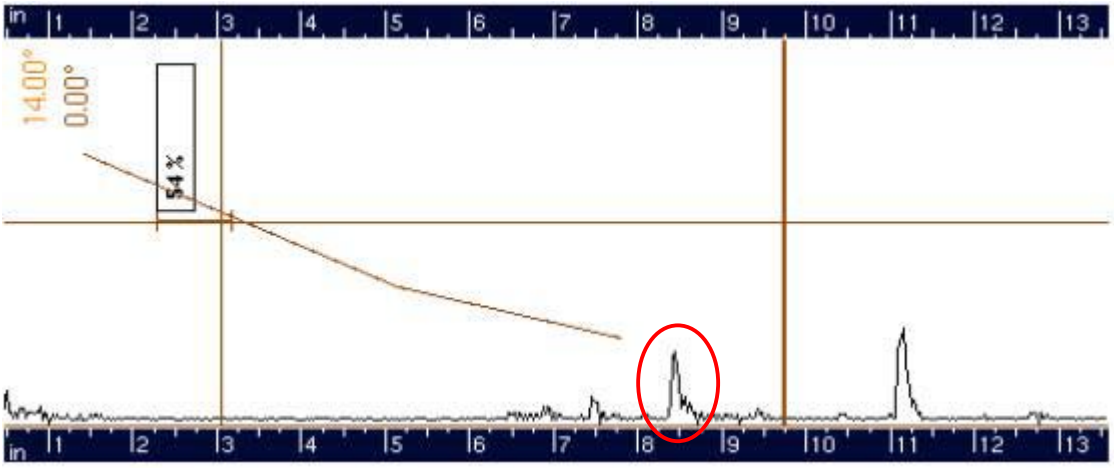

Figure 9: A-scan of the reflector that exceeded the DAC

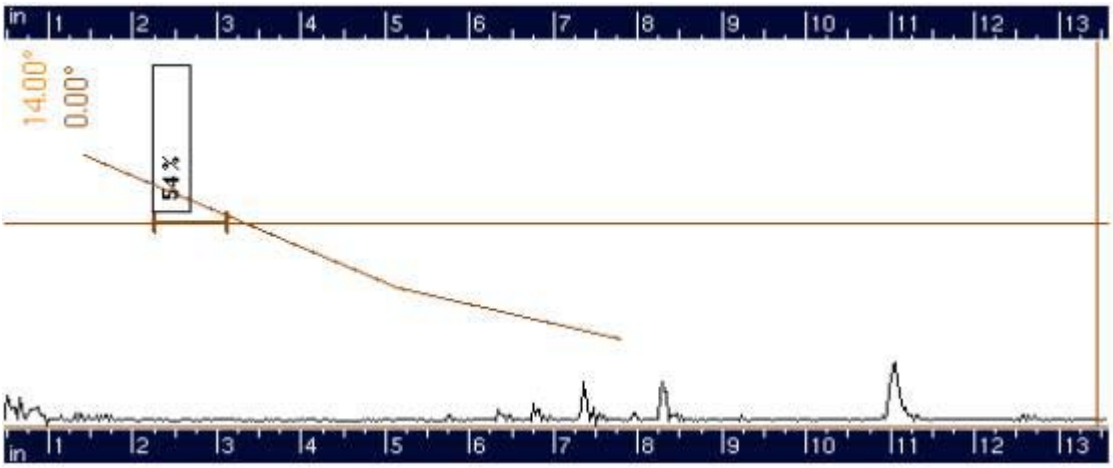

Figure 10: Representative A-scan of reflectors that did not break the DAC

3.3. Pin Findings Summary

Table 3: Inspection summary for the cable lift pins of the Sarah Mildred Long Bridge

Pin ID	UT Findings	Recommendation	Pin ID	UT Findings	Recommendation
Rt1-NB17T	Reflector Free	Re-inspect at two year interval	Rt1-SB17T	Largest Reflector **Exceeded DAC** @ 8.5 in., 180° Est. area: 0.5 in^2	Re-inspect at two year interval
Rt1-NB17B	Reflector Free	Re-inspect at two year interval	Rt1-SB17B	Largest Reflector @ 7.5 in., 0°	Re-inspect at two year interval
Rt1-NB18T	Largest Reflector @ 7.5in., 200°	Re-inspect at two year interval	Rt1-SB18T	Reflector Free	Re-inspect at two year interval
Rt1-NB18B	Reflector Free	Re-inspect at two year interval	Rt1-SB18B	Largest Reflector @ 7.5 in., 0°	Re-inspect at two year interval

4. Results – End Panel Bearing Pins

4.1. Reflector Free Pin

All 14 of the end panel bearing pins inspected on the Sarah Mildred Long Bridge had no internal reflectors other than the near threads, far shoulder and back wall. The S-scan and A-scan from pin RR-NB20S are shown in Figure 11. All pins on the railroad deck are cleared as *Reflector Free Pins* and behaved in this manner.

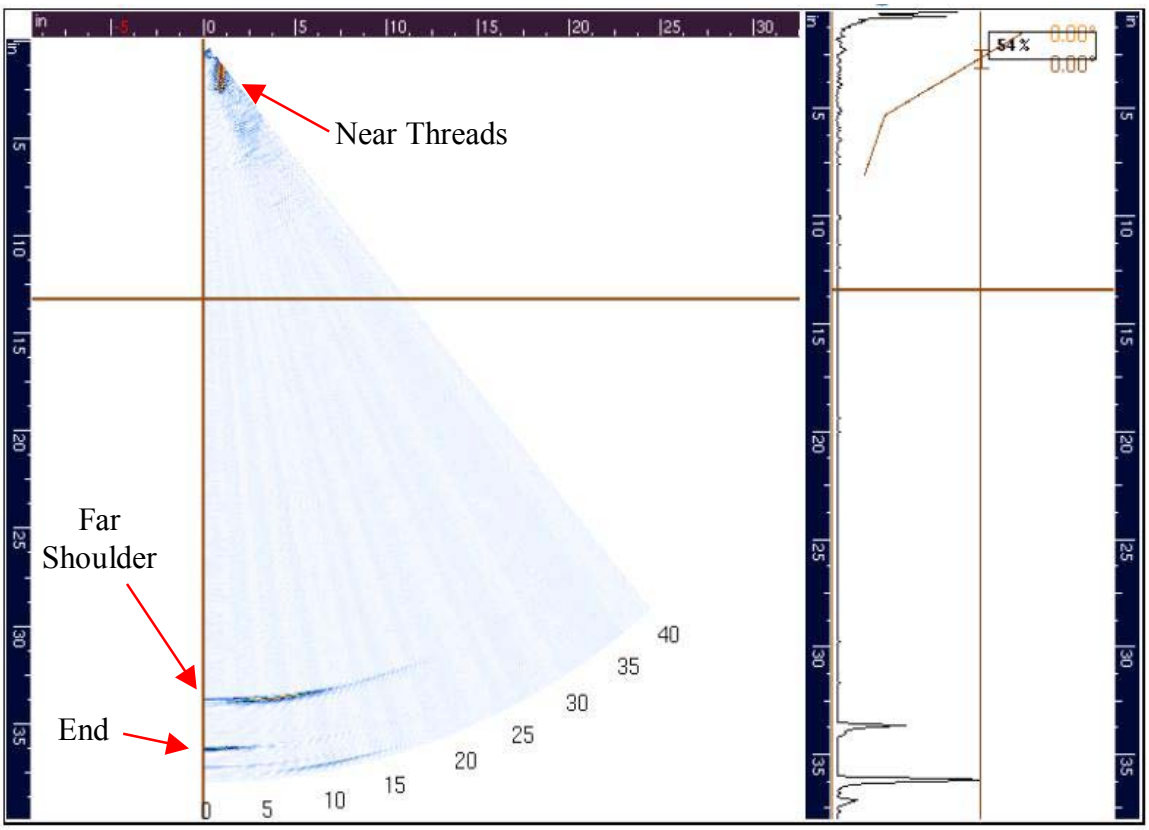

Figure 11: S-scan (left) and A-scan (right) from a reflector free end panel bearing pin

Table 4: Inspection summary for the end panel bearing pins of the Sarah Mildred Long Bridge

RR-NB20S	Reflector Free	Re-inspect at four year interval	RR-SB20S	Reflector Free	Re-inspect at four year interval
RR-NB19N	Reflector Free	Re-inspect at four year interval	RR-SB19N	Reflector Free	Re-inspect at four year interval
RR-NB19S	Reflector Free	Re-inspect at four year interval	RR-SB19S	Reflector Free	Re-inspect at four year interval
RR-NB18N	Reflector Free	Re-inspect at four year interval	RR-SB18N	Reflector Free	Re-inspect at four year interval
RR-NB17S	Reflector Free	Re-inspect at four year interval	RR-SB17S	Reflector Free	Re-inspect at four year interval
RR-NB16N	Reflector Free	Re-inspect at four year interval	RR-SB16N	Reflector Free	Re-inspect at four year interval
RR-NB16S	Reflector Free	Re-inspect at four year interval	RR-SB16S	Reflector Free	Re-inspect at four year interval
RR-NB15N	Reflector Free	Re-inspect at four year interval	RR-NB15N	Reflector Free	Re-inspect at four year interval

5. Summary

Nondestructive inspection of the eight lift cable pins on the US Route One Bypass road deck and the 16 end panel bearing pins on the lower railroad deck of the Sarah Mildred Long Bridge was performed using phased array ultrasound. No significant defects, wear, or corrosion were detected in 20 of the 24 pins. Advanced corrosion was detected in one pin, with a circumferential length of approximately two inches that penetrated approximately ¼ inch into the volume of the pin. The total cross-sectional area of the material loss due to this corrosion was estimated to be 0.5 in^2. Due to the presence of advanced corrosion in one of the lift cable pins, and minor corrosion on three others, it is recommended that the eight lift cable pins be re-inspected every two years in conjunction with the routine bridge inspection to determine at what rate the pin cross-section is decreasing. Due to the lack of reflectors found in the end panel bearing pins it is recommended to re-inspect these pins every four years.

Underwater Inspection Report

SARAH MILDRED LONG BRIDGE

SUMMARY

The underwater portions of the substructure units inspected for the Sarah Mildred Long Bridge were found to be in Satisfactory condition. The deterioration generally consists of minor deterioration to the concrete around low water. The deterioration to the back channel piers is more pronounced with corrosion holes in the steel casing, deteriorated concrete, and exposed reinforcing steel. No evidence of scour was observed.

INTRODUCTION

In June 2009, Appledore Marine Engineering, Inc. (AMEI) completed an underwater inspection of the Sarah Mildred Long Bridge. The inspection was performed by a four-man dive team under the direction of a Professional Engineer, and included a visual and tactile inspection of nine piers in the Piscataqua River and one pier in the back channel. The other piers on the Kittery and Portsmouth approach are exposed entirely above low water and therefore were excluded from the scope of the underwater inspection.

Previously Appledore completed underwater inspections for this structure in 2008.

OBJECTIVE

The objective of this project is to provide a general description and assessment with recommendations of the underwater condition of the Sarah Mildred Long Bridge Piers.

FACILITY DESCRIPTION

The Sarah Mildred Long Bridge was constructed in approximately 1940 over the Piscataqua River connecting Portsmouth, NH with Kittery, ME. The bridge is 2,804 feet long consisting of Pier 1 to Pier 9 and the Back Channel Pier which consists of a concrete pylon base with a steel encasement.

OBSERVATIONS

Below low water the structures are generally covered in light marine growth and representative areas were cleaned using hand tools for closer examination. The photos within this report provide a visual representation of the typical underwater conditions.

Piscataqua River Piers

The concrete is generally in sound condition below low water with some minor concrete surface deterioration. The surface deterioration is generally concentrated around the low water line and is limited to the outer 1½-inch of the concrete piers. Cleanings and hammer soundings identified sound concrete from the riverbed to the low water zone (Photo 1&2). The riverbed is generally composed of gravel with limited to no evidence of scour. Protruding approximately 4 to 8 feet from the mudline is a steel cofferdam encompassing the bridge piers. The cofferdam is generally 4 feet from the face of the bridge piers and was not inspected as it does not contribute to the structural system of the bridge.

Back Channel Pier

The two pylons in the Back Channel have severe corrosion of the steel encasement and moderate deterioration of the underlying concrete (Photo 3). At two locations steel reinforcing is exposed with moderate section loss (Photo 4).

While not included in the scope of the underwater inspection photographs were taken of more severe tidal zone deterioration (Photo 5&6) as access to this area was readily available by the support vessel.

ASSESSMENTS

Based on our underwater inspection, the underwater condition of these structures is Satisfactory due to isolated areas of minor to moderate deterioration. The deterioration noted in this report does not warrant load reductions to the substructure elements. Detailed examinations of the concrete cores and service life predictions determined that the concrete below low water has a remaining service life greater than 50 years, provided 1-2 inches of section loss can be tolerated.

The detailed concrete examination and material service life prediction determined that concrete exposed to higher oxygen levels in the tidal and atmospheric zones may require rehabilitation to provide an extended service life.

RECOMMENDATIONS

No repairs are recommended to the below low water portions of the Piscataqua River concrete piers.

Short term repairs (0-5 years) are recommended to the back channel piers that would consist of removing all unsound concrete and providing a concrete jacket from the riverbed to low water. For the purposes of this estimate we have assumed the repair would extend from the mudline to the top of the steel shell.

TABLE 2

Item No.	Recommended Repairs	Estimated Construction Cost (ECC)
1	Pylon repairs	$ 105,000
	Subtotal	**$ 105,000**
	Est. Engineering fees (Inspection, Design, Permits, and Const Admin)	$ 25,000
	TOTAL * say	**$ 130,000**

Costs are in 2009 dollars and include: Contingency, Mobilization, and Contractor Overhead and Profit.

PHOTOGRAPHS

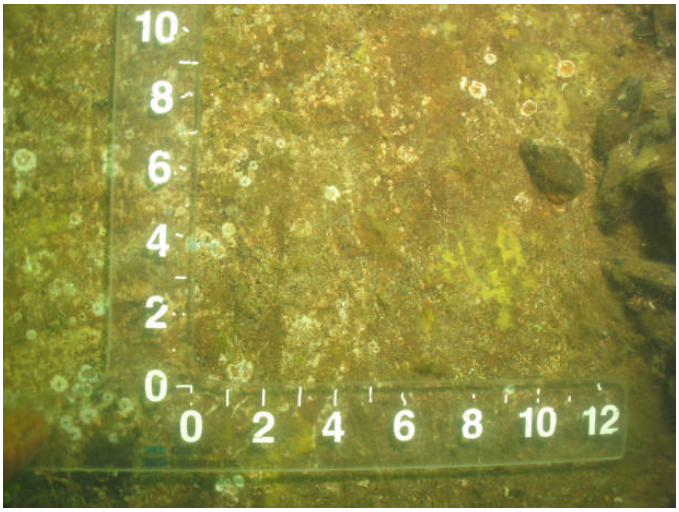

Photo 1:

Typical condition of concrete piers, note sound concrete.

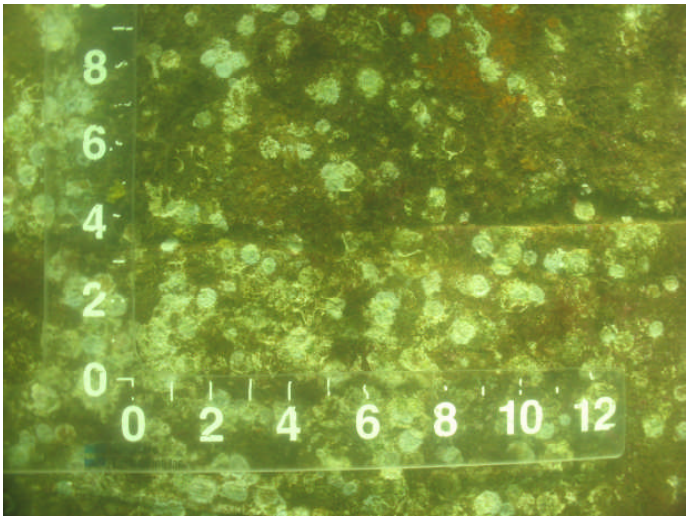

Photo 2:

Typical condition at construction joint.

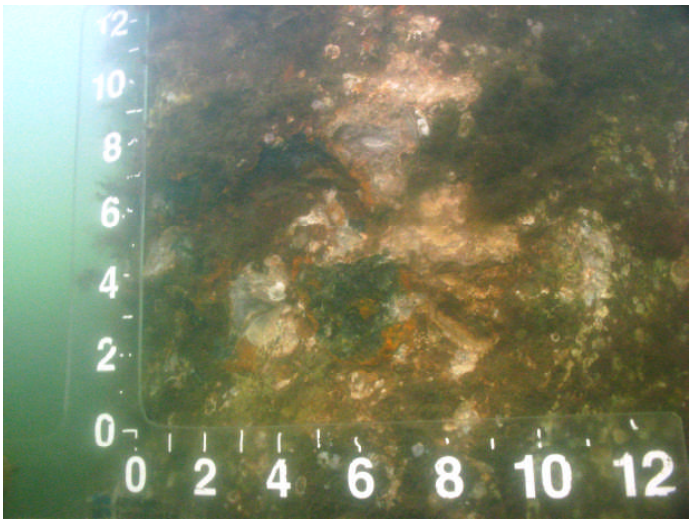

Photo 3:

Spalling of back channel pier at low water.

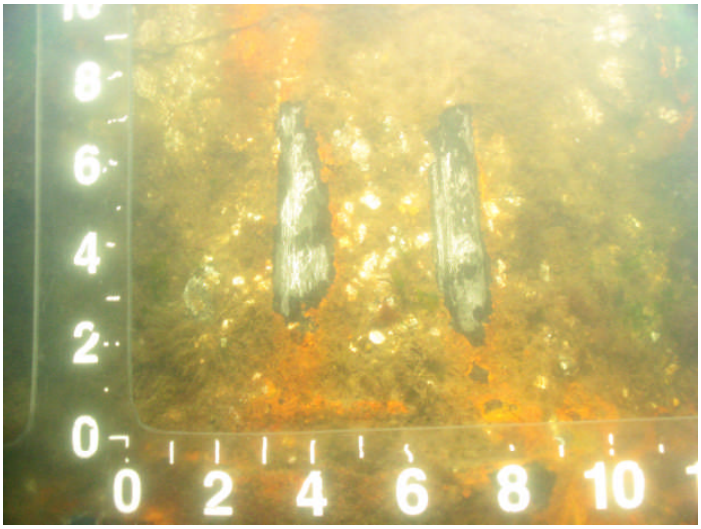

Photo 4:

Deteriorated concrete and exposed reinforcing of back channel piers at low water.

Photo 5:

Tidal zone deterioration of the concrete pylons, note split corners of steel shell with loose aggregate.

Photo 6:

Tidal zone deterioration at corner of pylon, note loss of concrete and exposed reinforcing.

FIGURES

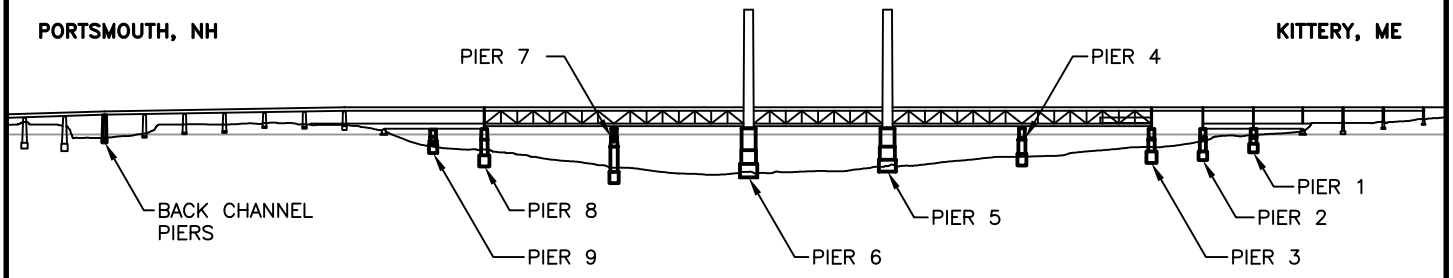

ELEVATION

SCALE: 1" = 300'–0"

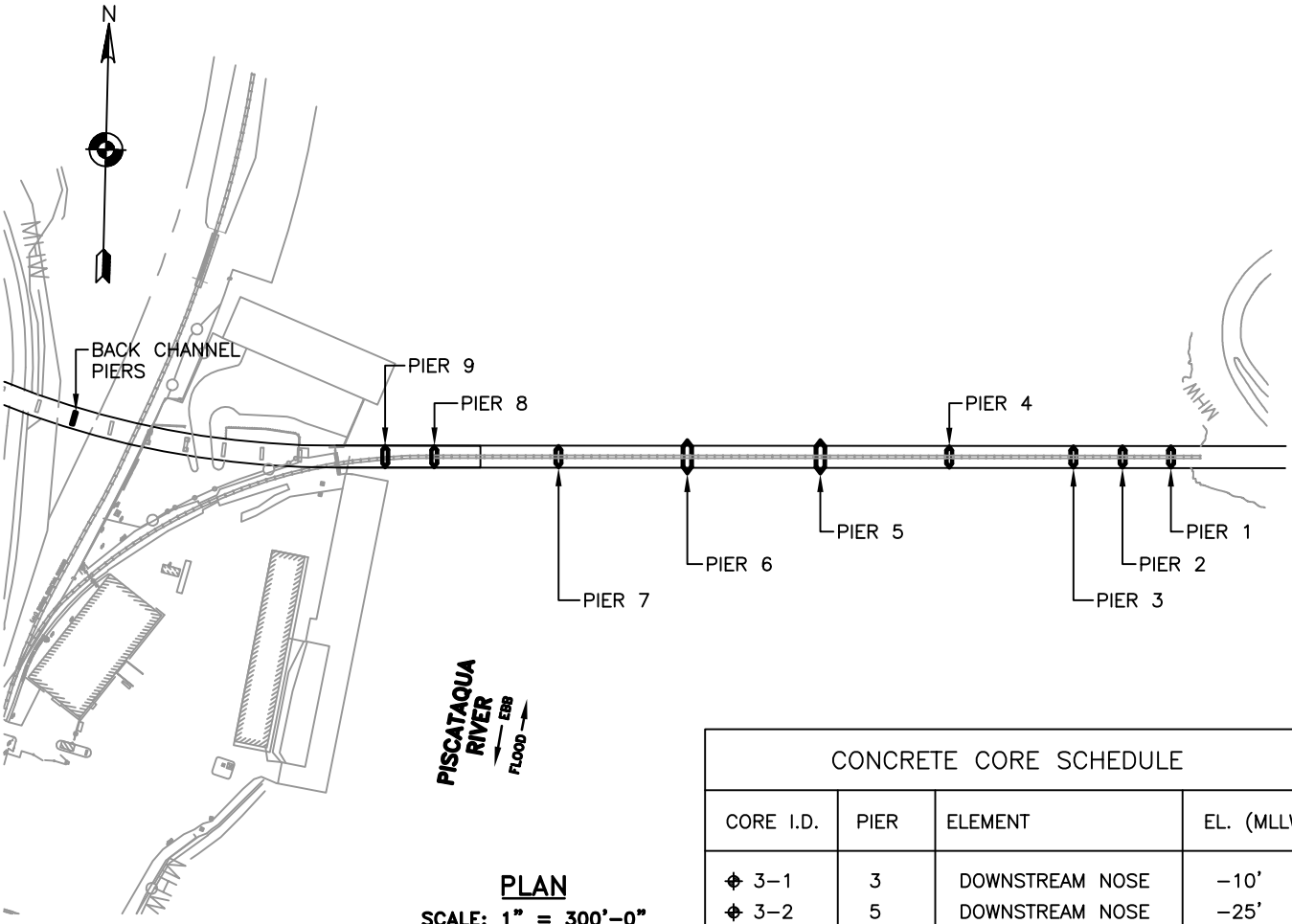

PLAN

SCALE: 1" = 300'–0"

CONCRETE CORE SCHEDULE			
CORE I.D.	PIER	ELEMENT	EL. (MLLW)
⌖ 3–1	3	DOWNSTREAM NOSE	–10'
⌖ 3–2	5	DOWNSTREAM NOSE	–25'
⌖ 3–3	6	UPSTREAM NOSE	–25'
⌖ 3–4	6	DOWNSTREAM NOSE	0'
⌖ 3–5	6	DOWNSTREAM NOSE	–50'
⌖ 3–6	BCP	CHANNEL FACE	–2'

GRAPHIC SCALE AS NOTED	DATE AUGUST 2009	APPLEDORE MARINE ENGINEERING, INC. PORTSMOUTH, N.H.	HDR ONE COMPANY Many Solutions 695 ATLANTIC AVE | 2ND FLOOR | BOSTON | MA | 02111
			PORTSMOUTH, NH SARAH MILDRED LONG BRIDGE GENERAL PLAN AND ELEVATION FIG. NO. 2

5083–Report Sarah Long.dwg

CONDITION RATING DESCRIPTIONS

CONDITION RATING DESCRIPTIONS

Rating	Description
Good	No visible damage, or only minor damage is noted. Structural elements may show very minor deterioration, but no overstressing is observed. No repairs are required.
Satisfactory	Limited minor to moderate defects or deterioration are observed, but no overstressing is observed. No repairs are required.
Fair	All primary structural elements are sound, but minor to moderate defects or deterioration is observed. Localized areas of moderate to advanced deterioration may be present but do not significantly reduce the load-bearing capacity of the structure. Repairs are recommended, but the priority of the recommended repairs is low.
Poor	Advanced deterioration or overstressing is observed on widespread portions of the structure, but does not significantly reduce the load-bearing capacity of the structure. Repairs may need to be carried out with moderate urgency.
Serious	Advanced deterioration, overstressing, or breakage may have significantly affected the load-bearing capacity of primary structural components. Local failures are possible and loading restrictions may be necessary. Repairs may need to be carried out on a high-priority basis with urgency.
Critical	Very advanced deterioration, overstressing, or breakage has resulted in localized failure(s) of primary structural components. More widespread failures are possible or likely to occur, and load restrictions should be implemented as necessary. Repairs may need to be carried out on a very high priority basis with strong urgency.

From: *Underwater Investigations, Standard Practice Manual*, ASCE, 2001.

Concrete Characterization and Condition Assessment

Sarah Mildred Long Bridge

Concrete Characterization and Condition Assessment – Actual and Future Deterioration

Final Report

Project No. MSL09307

Submitted to:

Mr. Noah Elwood, PE
Appledore Marine Engineering, inc.
600 State Street, Suite E
Portsmouth NH 03801
USA

Prepared by:

Materials Service Life, LLC
1400 Boul. du Parc Technologique, Suite 203
Quebec QC G1P 4R7
Canada

November 2009

LIMITED LIABILITY STATEMENT

THIS REPORT IS FOR THE EXCLUSIVE USE OF M.S.L.'S CLIENT AND IS PROVIDED ON AN "AS IS" BASIS WITH NO WARRANTIES, IMPLIED OR EXPRESSED, INCLUDING, BUT NOT LIMITED TO, WARRANTIES OF MERCHANTABILITY AND FITNESS FOR A PARTICULAR PURPOSE, WITH RESPECT TO THE SERVICES PROVIDED. M.S.L. ASSUMES NO LIABILITY TO ANY PARTY FOR ANY LOSS, EXPENSE, OR DAMAGE OCCASIONED BY THE USE OF THE REPORT. ONLY THE CLIENT IS AUTHORIZED TO COPY OR DISTRIBUTE THIS REPORT AND THEN ONLY IN ITS ENTIRETY. THE REPORT'S ANALYSIS, RESULTS, AND RECOMMENDATIONS REFLECT THE CONDITION OF THE SITES TESTED EXCLUSIVELY, AND MAY NOT BE REPRESENTATIVE OF ALL LOCATIONS THROUGHOUT A TESTED STRUCTURE. THE REPORT'S OBSERVATIONS AND TEST RESULTS ARE RELEVANT ONLY TO THE SAMPLES TESTED AND ARE BASED ON IDENTICAL TESTING CONDITIONS. FURTHERMORE, THIS REPORT IS INTENDED FOR THE USE OF INDIVIDUALS WHO ARE COMPETENT TO EVALUATE THE SIGNIFICANCE AND LIMITATIONS OF ITS CONTENT AND RECOMMENDATIONS AND WHO ACCEPT RESPONSIBILITY FOR THE APPLICATION OF THE MATERIAL IT CONTAINS.

THE STADIUM® MODEL IS A HELPFUL TOOL TO PREDICT THE FUTURE CONDITIONS OF CONCRETE MATERIALS. HOWEVER, ALL DURABILITY-MODELING PARAMETERS HAVE A STATISTICAL RANGE OF ACCEPTABLE RESULTS. THE MODELING USED IN THIS REPORT USES VALUES AS INPUT PARAMETERS BASED ON TECHNICAL INFORMATION OBTAINED FROM TECHNICAL DATASHEETS. THIS PROVIDES A SINGLE RESULT, WHICH PROVIDES A SIMPLE ANALYSIS EVALUATING CORROSION PROTECTION OPTIONS. PREVIOUS CONDITIONS ARE ASSUMED TO CARRY FORWARD IN THE PREDICTION MODEL; THERE ARE NO ASSURANCES THAT THE STRUCTURE WILL BE EXPOSED TO A SIMILAR ENVIRONMENT AS IN THE PAST.

ALL ANALYSES IN THIS REPORT ARE BASED STRICTLY ON THE CORROSION PROTECTION AND CONDITION OF THE REINFORCED CONCRETE MATERIALS. THE CONDITION APPRAISAL AND ANALYSIS BY NO MEANS CONSTITUTES A STRUCTURAL ENGINEERING CONDITION APPRAISAL OR ANALYSIS. ANY AND ALL RECOMMENDATIONS PRESENTED IN THIS REPORT SHOULD BE VERIFIED AND VALIDATED BY A COMPETENT STRUCTURAL ENGINEER.

© Copyright – Material Service Life, LLC

TABLE OF CONTENTS

1 Mandate 1
1.1 Introduction 1
1.2 Objectives and Work Scope 2
1.2.1 Laboratory Investigation 2
1.2.2 Service Life Modeling 3

2 Laboratory Investigation 4
2.1 Visual Inspection of the Cores 4
2.2 Compressive strength 6
2.3 Air-void characteristics 6
2.4 Transport properties 7
2.4.1 Porosity 7
2.4.2 Ionic Diffusion Coefficients 7
2.5 Petrographic examinations 8
2.5.1 Visual Observations of Samples 8
2.5.2 Microscopy Observations 9
2.5.3 Concrete composition 10
2.6 Total Chloride Content Profiles – Test Results 11

3 Discussions – Results and Observations 12
3.1 Compressive strength 12
3.2 Air void characteristics 12
3.3 Transport properties 12
3.4 Petrographic examination 13
3.5 Chloride profiles 13

4 Corrosion initiation 14

5 Service Life Modeling - Time to Corrosion Initiation 15
5.1 Exposure conditions 15
5.2 Numerical Model Validation 16
5.3 Future chloride penetration – no repairs 17
5.4 Chemical degradation – no repairs 17
5.5 Repair Options 20
5.5.1 6-inch repair 20
5.5.2 10-inch repair 21

6 Conclusion 22

Appendix A – Core pictures 25

Appendix B – Petrographic examinations 27

© Copyright – Material Service Life, LLC

1 Mandate

1.1 Introduction

Materials Service Life, LLC (MSL) was mandated by **Appledore Marine Engineering, Inc.** (AME) to characterize the concrete and to assess the service life of the underwater concrete piers from two bridges located at Portsmouth, New Hampshire. The mandate also covered the assessment of different repair options and recommendations for maintaining the pier in good condition. The service life assessment uses simulations performed with STADIUM®, a predictive modeling software. The two bridges are:

- Memorial Bridge
- Sarah Mildred Long Bridge

This report presents the concrete characterization and condition assessment for the Sarah Mildred Long Bridge only. A separate report was done for the Memorial Bridge.

The Sarah Mildred Long Bridge is a lift-bridge over the Piscataqua River between Portsmouth, New Hampshire and Kittery, Maine. The bridge is a double deck truss bridge, with the US 1 Bypass road deck above and a railroad bed below (Figure 1). The bridge construction was completed in 1940 and has a total length of 854.7 m (2,804 ft) and a total width of 9.1 m (29.9 ft). The main unit is composed by 5 spans, including the lift span. There are twenty-two approach spans.[1],[2]

Figure 1 – Typical view of the Sarah Mildred Long Bridge over the Piscataqua River at Portsmouth, NH

[1] wikipedia
[2] http://nationalbridged.com

© Copyright – Material Service Life, LLC

1.2 *Objectives and Work Scope*

This investigation was undertaken to identify the cause of the concrete degradation of the underwater concrete piers, to generate information on the residual service-life of the structure and to analyze the influence of different remediation strategies. The work scope included a laboratory investigation and a service life modeling.

The field work, including the cores selection, and the core extraction were performed by Appledore Marine Engineering (AME) personnel. Six 2 ¾-in. diameter cores were extracted in the underwater portion of the piers.

A final report was prepared to summarize the laboratory results, the service life simulations, the conclusions, and the recommendations.

1.2.1 *Laboratory Investigation*

Laboratory testing was conducted on concrete cores received. Results of the laboratory and field investigations were used to predict future performance of the concrete. The laboratory investigation included the following tests:

1. Determination of compressive strength according to ASTM C39 – *Standard Test Method for Compressive Strength of Cylindrical Concrete Specimens*. Compressive strength was determined on two 2 ¾-in. diameter cores taken from two different piers.

2. Determination of ionic diffusion coefficients from the results of transport property tests based on the following procedures:
   - Porosity test according to ASTM C642 – *Standard Test Method for Density, Absorption, and Voids in Hardened Concrete*;
   - Pore solution chemistry analysis;
   - Ion migration test (modified- ASTM C1202 - (05) – *Electrical Indication of Concrete's Ability to Resist Chloride Ion Penetration*).

   The two companion test samples needed for each test were from two different piers. Moreover, in each selected core, a porosity test sample was selected near an ion migration test sample.

3. Evaluation of the condition of the concrete and possible causes of deterioration. Petrographic examinations were carried out in compliance with guidelines provided in ASTM C856 - *Standard Practice for Petrographic Examination of Hardened Concrete*. Analyses were performed by Niels Thaulow of RJ Lee Group Inc. Petrographic examinations included the determination of carbonation depth using the phenolphthalein pH-indicator and microscopic observations. The concrete

© Copyright – Material Service Life, LLC

microstructure was observed by optical and scanning electron microscopy (SEM). Petrographic examinations were conducted on one concrete core to obtain information on the concrete and the aggregate properties and to detect any active degradation mechanisms.

4. Determination of total chloride content based on the procedure in ASTM C1152-(04) – *Standard Test Method for Acid-Soluble Chloride in Mortar and Concrete*. Total chloride contents were measured at various depth increments from exposed surface. Chloride ion profiles were determined to assess the severity of chloride ion contamination from exposure to seawater exposure. Two concrete cores were selected, such as they represent different pier and different water level.

5. Determination of the air-void characteristics according to ASTM C457 - *Standard Test Method for Microscopical Determination of Parameters of the Air-Void System in Hardened Concrete*. The test was performed on one core.

1.2.2 *Service Life Modeling*

The service life modeling included three subtasks, described below. Field and laboratory data were used to predict future durability performance and to propose repair options (restoration and maintenance). A state-of-the-art software, called STADIUM®, was used to model future performance against deterioration of concrete. The analysis involved:

1. Determination of past chloride exposure conditions using the chloride ion profiles and concrete transport properties obtained with the laboratory investigation.

2. Prediction of future chloride contamination using STADIUM®. Evaluation of the possible future deterioration based on the data collected during the laboratory testing.

3. Assessment of maintenance and repair options to determine the most effective technical solutions to extend the expected service life of the structure.

© Copyright – Material Service Life, LLC

2 Laboratory Investigation

Laboratory testing was conducted on the concrete cores received. Tests results are presented in the following sub-sections. The results are presented in this section (section 2) and the discussion on the results is presented in section 3.

2.1 Visual Inspection of the Cores

The cores were extracted under the supervision of Appledore Marine Engineering (AME). Six 2 ¾-in. diameter concrete cores from Sarah Mildred Long bridge were received at the laboratory.

From the information received, the cores were taken from different pier and at different elevation. Table 1 presents the list of the cores received along with their location. All concrete cores were identified as written on the concrete core, provided by Appledore Marine Engineering, Inc.

Table 1 - Samples received

Core ID		Pier	Element	EL. (MLLW)	Number of pieces
# 3-1	Sarah Mildred Long Bridge	3	Downstream nose	-10′	1
# 3-1	Sarah Mildred Long Bridge	3	Downstream nose	-10′	1
# 3-2	Sarah Mildred Long Bridge	5	Downstream nose	-25′	1
# 3-3	Sarah Mildred Long Bridge	6	Upstream nose	-25′	1
# 3-4	Sarah Mildred Long Bridge	6	Downstream nose	0′	1
# 3-5	Sarah Mildred Long Bridge	6	Downstream nose	-50′	2
# 3-6	Sarah Mildred Long Bridge	BCP	Channel face	-2′	1

Visual observations for all cores are presented in Tables 2. Upon reception, the cores were photo-documented. Pictures of the cores are presented in Appendix A. A complete visual inspection of one core is presented for the samples selected for petrographic examination. These observations are presented in section 2.4.

© Copyright – Material Service Life, LLC

Table 2 – Visual observations of the cores received from Sarah Mildred Long Bridge

ID	Number of pieces	Diam. (inch)	Length (inch)	General Comment
# 3-1	1	2 ¾	14 ⅛	- Well consolidated concrete (Dmax = 1 ⅜'') - Exposed surface was "polished" by coring operation
# 3-2	1	2 ¾	11	- Well consolidated concrete (Dmax = 1 ⅝'') - Exposed surface was rough without apparent coarse aggregate
# 3-3	1	2 ¾	12 ¾	- Well consolidated concrete (Dmax = 1 ½'') - Exposed surface was rough without apparent coarse aggregate - Cracks parallel to the exposed surface at ¼'' depth (white deposits within the cracks) - Steel reinforcement with a cover of 3 ⅝''
# 3-4	1	2 ¾	13	- Well consolidated concrete (Dmax = 1 ½'') - Exposed surface was rough without apparent coarse aggregate - Crack parallel to the exposed surface, 2 in. long, at ¼'' depth - White deposits within voids to a depth of 1 ½'' from exposed surface - Steel reinforcement with a cover of 5 ½'' (corrosion pits)
# 3-5	2	2 ¾	13	- Well consolidated concrete (Dmax = 1 ¼'') - Exposed surface was rough without apparent coarse aggregate - Crack parallel to the exposed surface, 2'' long, at ¼'' depth - White deposits within voids to a depth of 1 ½'' from exposed surface - Steel reinforcement with a cover of 3 ⅞'' (pits of corrosion)
# 3-6	1	2 ¾	12 ⅛	- Well consolidated concrete (Dmax = 1 ⅝'') - Exposed surface was delaminated (apparent coarse aggregates and white deposits) - Cracks parallel to the exposed surface to a depth of ⅜'' (cracks propagated through aggregate and had white deposits) - White deposits within voids to a depth of 3'' from exposed surface

© Copyright – Material Service Life, LLC

2.2 *Compressive strength*

Compressive strength determination was performed in accordance with ASTM C39 – *Standard Test Method for Compressive Strength of Cylindrical Concrete Specimens*. Individual results are summarized in Table 3, expressed in psi and MPa. From Table 3, the individual compressive strength results are similar from one location to the other (5,775 and 6,195 psi (39.8 and 42.7 MPa)) for an average of 5,985 psi.

Table 3 – Compressive strength results

Core I.D.	Bridge	Sample position in core+, inch	Compressive Strength, psi (MPa)†
# 3-3	Sarah Long Bridge	5 ⅛'' to 9 ⅞''	6,195 (42.7)
# 3-4	Sarah Long Bridge	6 ¾'' to 11 ⅜''	5,775 (39.8)

Note +: depth measured from the exposed surface of core
Note *: as received conditions
Note †: 1 MPa = 145 psi

2.3 *Air-void characteristics*

The air-void characteristics were determined according to ASTM C457 - *Standard Test Method for Microscopical Determination of Parameters of the Air-Void System in Hardened Concrete*. The characteristics measured with this test allows evaluating the concrete's ability to adequately resist frost action such as freezing and thawing cycles in saturated conditions in the presence or absence of deicing salts.

Test was performed on one core by bridge. The results of the tests are presented in Table 4. In Table 4, the measured air contents and spacing factors are below 2.5% and over 0.020 inch (500 µm), respectively.

Table 4 - Parameters of the Air-Void System in Hardened Concrete

Core I.D.	Bridge	Paste Content, %	Air Content, %	Specific Surface, $inch^{-1}$ (mm^{-1})	Spacing Factor, inch (µm)
# 3-5	Sarah Long Bridge	22.3	2.0	262 (10.3)	0.025 (643)

© Copyright – Material Service Life, LLC

2.4 *Transport properties*

To generate information on the transport properties of concrete, the ionic diffusion coefficients were determined with the porosity test and the ion migration test. These tests were performed on concrete specimens cut from the extracted cores. The two companion test samples needed for each test were from two different piers.

2.4.1 *Porosity*

Porosity measurements were performed according to ASTM C642 – (06) – *Standard Test Method for Density, Absorption, and Voids in Hardened Concrete*. Porosity corresponds to the total volume of voids that can be saturated with water. In addition to provide information on the quality of in-place concrete, porosity values were used as input parameters in STADIUM®-IDC to determine diffusion coefficients and in STADIUM® to simulate future contaminant ingress. The selected cores and their respective results are summarized in Table 5.

As can be seen in Table 5, porosity results are around 13.0%. The absorption is around 5.5%. Based on these results, the concrete seems to be of good quality.

Table 5 – Absorption and Porosity Results

Core I.D.	Bridge	Sample position in core+, inch	Absorption, %	Porosity, %
# 3-2	Sarah Long Bridge	⅜'' to 4 ¾''	5.5	12.6
# 3-5	Sarah Long Bridge	5 ⅛'' to 9 ¼''	5.6	12.7

Note +: depth measured from the exposed surface of core

2.4.2 *Ionic Diffusion Coefficients*

Ionic migration tests were performed to characterize the ionic diffusion properties of the concrete cores extracted from the piers. The test used was a modified (and improved) version of ASTM C1202 - (05) – *Electrical Indication of Concrete's Ability to Resist Chloride Ion Penetration*.

Ion transport through a saturated concrete specimen was accelerated by applying an electrical potential to the test cell. During testing, which lasts usually 14 days, the current passing through the sample was measured. Migration test results, as well as porosity, were used to determine the diffusion coefficients using STADIUM®-IDC, a specialized version of STADIUM®. The length of the samples was extended to 3'' rather than the usual 2'' length in order to avoid direct path along the cement paste-aggregate interface.

© Copyright – Material Service Life, LLC

The selected cores and their respective results are presented in Table 6. The results vary from 24.0 to 36.0 x 10^{-11} m^2/s.

Table 6– OH^- Diffusion Coefficient Results

Core I.D.	Bridge	Sample position in core+, inch	OH^- Diffusion coefficient, x 10^{-11} m^2/s	Average, x 10^{-11} m^2/s
# 3-2	Sarah Long Bridge	4 ¾'' to 7 ⅞''	24.0	30
# 3-5	Sarah Long Bridge	9 ¼'' to 12 ¼''	36.0	

Note +: depth measured from the exposed surface of core

2.5 *Petrographic examinations*

One core was selected for petrographic examination. Sample was cross-sectioned and one surface was coated with the pH indicator phenolphthalein. Two thin sections were then prepared from the core, one from the exposed surface and one from the interior (a total of 2 examinations was performed). Niels Thaulow at RJ Lee Group performed these examinations.

The thin sections were analyzed in accordance with ASTM C 856-04 *Standard Practice for Petrographic Examination of Hardened Concrete* using visual examinations, an optical stereo-microscope, a polarized light microscope (PLM) and a scanning electron microscope (SEM) with energy dispersive spectrometry (EDS). The water/cement ratio (W/C) was determined by fluorescence microscopy and the composition of the concrete was calculated based on W/C and estimation of the cement paste content. In addition, a piece of rebar from the Sarah Long Bridge core was examined with an optical stereo-microscope and with a scanning electron microscope.

2.5.1 *Visual Observations of Samples*

The visual observations are a compilation of observations made visually on the core in as-received condition and with an optical stereo-microscope on the cut face of the core.

Pier 6 of Sarah Mildred Long Bridge, core #3-3 (RJLG ID 3638016)

The sample was received in two pieces, which were 2 ¾" in diameter and approximately 8 ½" in length overall. One portion was 0" to 5" of the original length and the other portion was from 9 ¾" to 12 ¼" of the original length. The top exposed surface had marine growth and some spalling. The bottom (at 12 ¼") was a fractured surface. The core had a 1" piece of reinforced steel with a cover of 3 ⅝". The interior surface of the reinforcement had patches of brownish red corrosion as seen in Figure 2 and Figure B2 in Appendix B. The paste was light gray in color and even in appearance. The concrete was

© Copyright – Material Service Life, LLC

well consolidated. The coarse aggregate was mostly rounded. The maximum aggregate size was about 1 ⅜". The exposed surface was not carbonated. Section location and the phenolphthalein test are shown in Figure B1 in Appendix B.

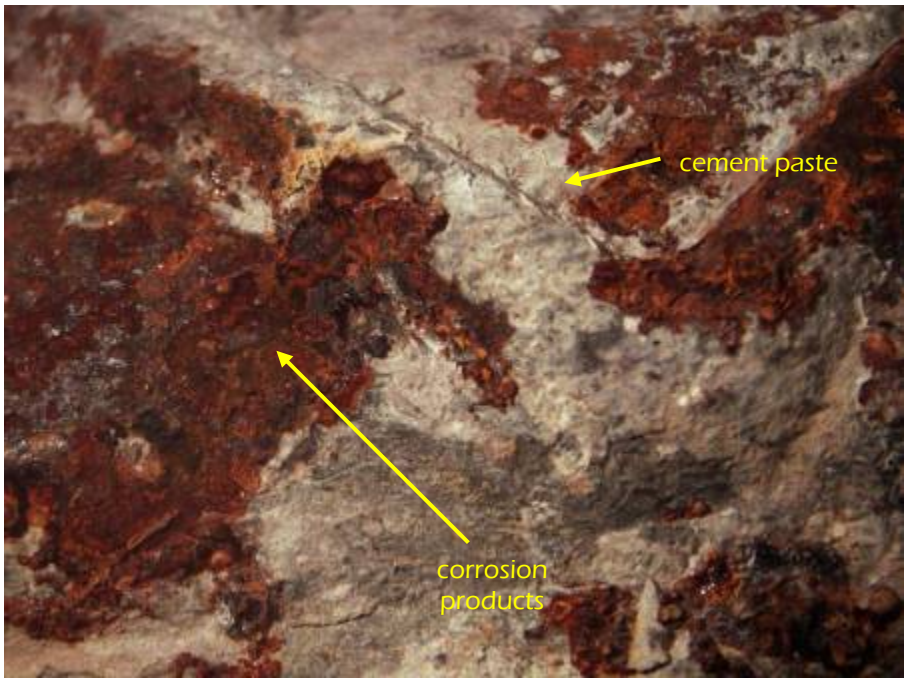

Figure 2 - Pier 6 of Sarah Mildred Long Bridge core #3-3 (RJLG ID 3638016). Stereo optical image showing corrosion products and cement paste adhering to the rebar. Image area is 21 mm wide.

2.5.2 *Microscopy Observations*

Microscopy observations were performed on thin sections extracted from selected areas.

Pier 6 of Sarah Long Bridge, 3-3, RJLG ID 3638016

Examination of the rebar by SEM revealed iron chloride corrosion product and chloride in the paste adhering to the steel reinforcement. The images are seen in Figure B3 and Figure B4 in Appendix B. Thin sections were prepared from the top exposed surface (noted as "T") and from the interior of the core (noted as "B") perpendicular to the exposed surface. The concrete was not air-entrained and was dense with a water/cement ratio of approximately 0.45. The cement was a Portland cement and fully hydrated. The cement paste content was estimated as 30% by volume. No fly ash or slag was seen. The coarse aggregate consisted of predominately feldspar and quartz. The fine aggregate was quartz. No alkali silica reaction was seen. The exposed surface had weak external sulfate attack seen as cracking parallel to the exposed surface and ettringite in cracks and voids (Figure 3). Calcium carbonate was seen in cracks near the exposed surface and calcium hydroxide

© Copyright – Material Service Life, LLC

was seen in the non-carbonated paste throughout the core. Friedel's salt, a sign of chloride ingress, was seen in the top section of the core. In Appendix B, images from the petrographic microscope are shown in Figure B5 through Figure B7 and images from the SEM are shown in Figure B8 through Figure B29.

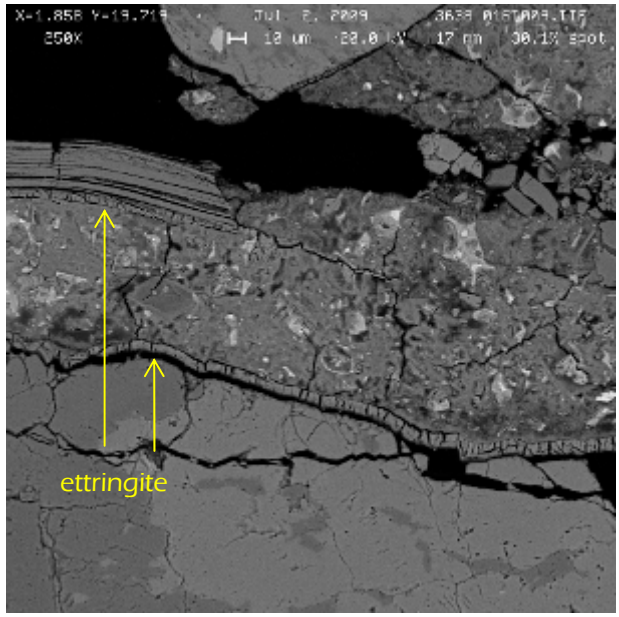

Figure 3 - Pier 6 of Sarah Mildred Long Bridge, core #3-3 (RJLG ID 3638016T). SEM image showing cracks parallel to the exposed surface. Some of the cracks are filled with ettringite

2.5.3 *Concrete composition*

The composition of the concrete was assessed during the petrographic examinations and is summarized in Table 7. The cement content is calculated based on the estimated paste volume and water-cement ratio assuming a specific gravity of 3.15 for the cement. The concrete has a water/cement ratio of 0.45, which correlates with the porosity results but not the ionic diffusion coefficient results. The concrete analyzed is of fair quality based on all results.

Table 7 – Composition of the Concrete

Core I.D.	Bridge	Observed properties		Calculated Cement Content*, lb/yd³ (kg/m³)
		Water/Cement ratio	Paste Content, %	
# 3-3	Sarah Long Bridge	0.45	30	659 (391)

Note *: The cement content is calculated based on the estimated paste volume and w/c ratio assuming a specific gravity of 3.15 for the cement.

© Copyright – Material Service Life, LLC

2.6 *Total Chloride Content Profiles – Test Results*

Total chloride ion content was measured, at various depth increments, based on the procedure described in ASTM C1152 – *Standard Test Method for Acid-Soluble Chloride in Mortar and Concrete*. The concrete was ground at different depth to produce a fine powder prior to chloride determination. For each chloride content determination, a minimum of 20 grams of concrete was ground. Chloride ions were digested using a diluted nitric acid. Diluted nitric acid was prepared with a commercial laboratory concentrated nitric acid (normal concentration of 65%). The mix was 1 volume of 65% HNO_3 to 9 volumes of distilled water. After the oven-drying period, 10 grams of dried powder sample was weighed and placed into a 150-ml beaker. The 100 ml diluted nitric acid, heated at 176°F (80°C), was poured into each beaker and mixed with the powder sample. One hour after adding acid, the dissolved solution was then vacuum filtered using filter paper (47 mm Ø55, Cat. no. 1001 055). The filtrate was collected in plastic sample bottle for chloride concentration analysis. Chloride content was determined using an automatic titrator (Mettler DL21).

Chloride profiles were performed on two concrete cores selected from the received cores (see Table 1). The selected concrete cores represent different piers and different water level. Figure 4 presents the chloride profiles determined on the selected concrete cores. On the graphs, 0 on the X-axis represents the surface exposed to seawater. In this figure, it can be observed that, near the surface, the chloride concentrations are high (around 7,000 ppm).

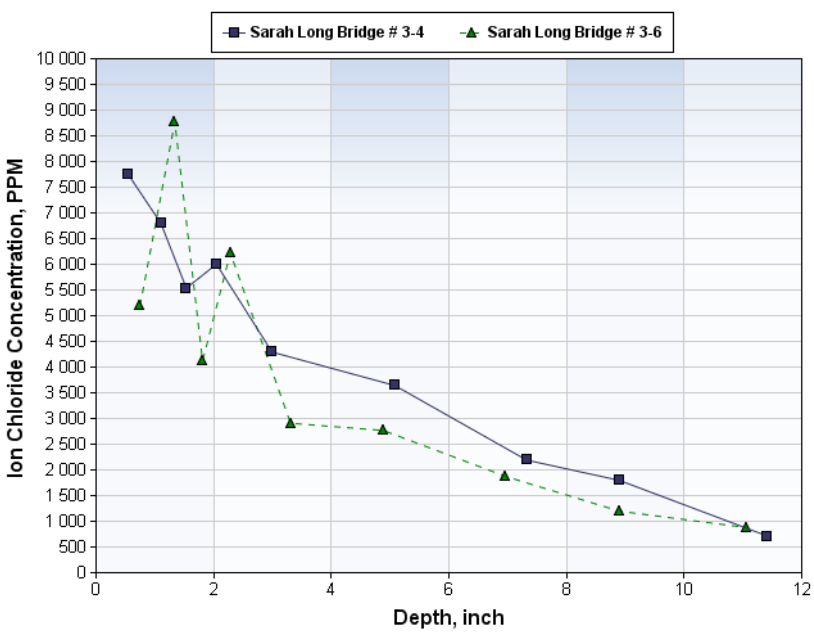

Figure 4 – Experimental chloride profiles – Sarah Mildred Long Bridge after 69 years of exposure

© Copyright – Material Service Life, LLC

3 Discussions – Results and Observations

Different tests were performed to assess the characteristics of the concrete, the contamination level and possible degradation mechanisms inside the concrete extracted from the Sarah Mildred Long bridge over the Piscataqua River at Portsmouth, NH.

3.1 Compressive strength

The compressive strength results are quite similar from one location to the other (5,775 and 6,195 psi (39.8 and 42.7 MPa)).

3.2 Air void characteristics

The air void results suggest that piers' concrete was not properly air entrained. The air-void network does not possess the required characteristics to protect the concrete of the piers against the effects of freezing and thawing in saturated conditions or against deicer salt scaling. Suggested values of 0.008 inch (200 µm) for the spacing factor and 6% for the air content are given in the document ACI 201.2R *Guide to Durable Concrete* to protect concrete against frost action.

3.3 Transport properties

The concrete from both piers have porosity around 13%. The porosity results are indicative of good quality concrete. Good quality normal-weight laboratory-produced concrete with a 0.45 water-binder ratio generally shows 11% to 12% porosity.

The ionic diffusion coefficient varies from one location to the other. The variability in the ionic diffusion coefficient results is not consistent with the variability found for the porosity results given in Table 5 (both samples were extracted from the same core).

The ionic diffusion coefficients indicate that the concrete is more porous than a typical 0.45 water-cement ratio concrete. Based on this affirmation, the ionic diffusion coefficient does not correlate the quality of concrete with the porosity. From the ionic diffusion coefficient results, the concrete from these structures could be considered porous, since good quality laboratory-produced concrete having a water/binder ratio of 0.45 normally shows values from 10 to 13 x 10^{-11} m^2/s.

© Copyright – Material Service Life, LLC

3.4 *Petrographic examination*

Pier 6 of the Sarah Mildred Long Bridge showed weak signs of external sulfate attack at the exposed surface of the core, which was 25′ under water. Ettringite was found in voids and cracks near the exposed surface. Chloride ions were found throughout the sample in the calcium silicate hydrate (CSH) and as Friedel's salt (see Figure 5). Chloride ingress can cause corrosion of the steel reinforcements without deleterious effects in the paste. The steel reinforcement that had a cover of 3 ⅝″ showed areas of weak chloride-induced corrosion (see Figure 2). There were no signs of alkali silica reaction. The concrete in the interior of the pier was sound with fully-hydrated Portland cement. The concrete was not air-entrained, which may exacerbate cracking at the waterline and above due to freezing and thawing.

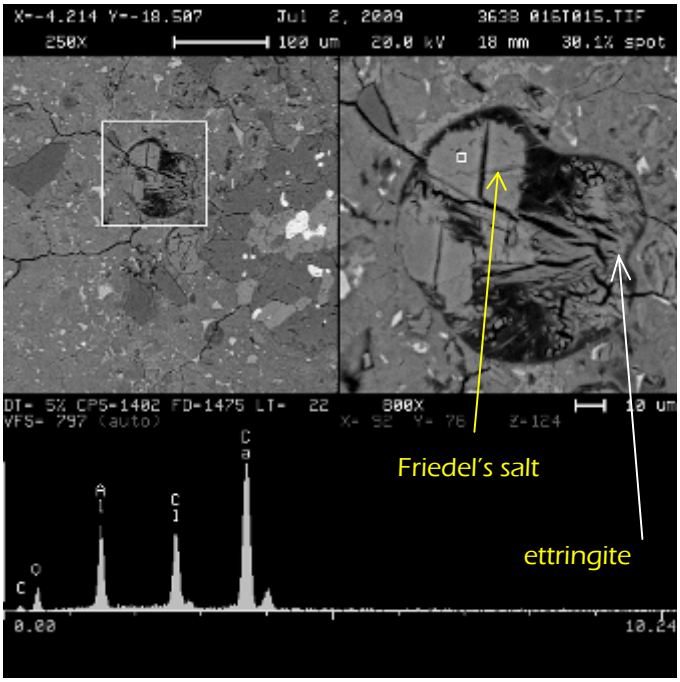

Figure 5 - Pier 6 of Sarah Long Bridge, core #3-3 (RJLG ID 3638016T). SEM images with EDS spectrum showing Friedel's salt in an air void. The other material in the air void is ettringite.

3.5 *Chloride profiles*

Chloride profiles shown in Figure 4 (see section 2.6) showed that piers are contaminated with chlorides. From the results, the concrete is contamination reaches a depth of at least 12 inches. Chloride profiles in Figure 4 suggest that the concrete from piers is exposed to high salinity water

© Copyright – Material Service Life, LLC

4 Corrosion initiation

The critical chloride concentration required to initiate the corrosion reaction has been extensively investigated over the past decades. Moreover, the critical chloride threshold for corrosion initiation is not a fixed value. Recent investigations suggest that the threshold chloride concentration is also influenced by the quality of the steel (plain steel, epoxy-coated, or stainless).[3] Furthermore, for a given type of steel, threshold values tend to vary quite significantly.[4,5] For instance, in their comprehensive review, Alonso et al.[2] found that values reported for black steel ranged from 0.25% to 3.0% of chloride per mass of binder. A total chloride content above 0.30% of the cement mass is often considered sufficient to initiate corrosion of black steel[6] in concrete that is initially chloride-free. This threshold is used by the Federal Highway Administration (FHWA) but is, based on the literature data, a conservative assumption since it is in the lower part of the bracket.

Tests performed by MSL have yielded a threshold value within this range. The corrosion initiation threshold established by MSL is 0.50 ± 0.05% of the cement mass[7]. This critical chloride content will be used in the following analysis.

Using a critical chloride content threshold of 0.50 ± 0.05% per mass of cement, for a concrete having a cement content of 659 lb/yd^3 (391 kg/m^3), based on the petrographic examinations, and a bulk dry specific gravity of 2.30 (calculated from the porosity results), the chloride threshold would be 0.094 % by mass of dry concrete (940 ppm).

The ion chloride profiles in Figure 4 indicate that the chloride content is over the critical value of 940 ppm up to 12 in. depth. The ion chloride profiles in Figure 4 indicate that the chloride content at rebar depth (about 3 ⅝ - 5 ½ in. from the received cores from Sarah Mildred Long Bridge) is over 3,000 ppm. Visual observations revealed patchy corrosion on the rebar area (see Figure 6). That means that corrosion has initiated but the propagation rate is slow. The slow rate of corrosion induced by chloride contamination is due to the fully saturated concrete that leads to the lack of oxygen around the embedded rebars. The reduction reactions are slowed, if not stopped, without supply of oxygen at the rebar. Under these conditions, the reduction reaction controls the corrosion rate which is maintained low. However, in tidal zone, oxygen is available and corrosion can propagate faster.

---

[3] Federal Highway Administration (FHWA), *Corrosion Evaluation of Epoxy-coated, Metallic-clad and Solid Metallic Reinforcing Bars in Concrete*, Report No. FHWA RD 98 153. December 1998.
[4] Alonso, C. et al. 2000, 'Chloride Threshold Values to Depassivate Reinforcing Bars Embedded in a Standardized OPC Mortar', *Cement and Concrete Research*, Vol. 30, pp. 1047-1055.
[5] Bentur, A., Diamond, S., Berke, N. (1999) *Steel Corrosion in Concrete - Fundamentals and Civil Engineering Practice*, E & FN Spon.
[6] Rosenberg, A. et al. 1989, 'Mechanisms of Corrosion of Steel in Concrete', *Materials Science of Concrete*, Vol. 1, J. Skalny ed., American Ceramic Society, Westerville (USA), pp. 285-313.
[7] Henocq et al., 2007, '*Determination of the Chloride Content Threshold to Initiate Steel Corrosion*', Proceedings of the 5th International Essen Workshop – Transport in Concrete:Nano to Macrostructure, Max J. Setzer Editor, June 2007.

© Copyright – Material Service Life, LLC

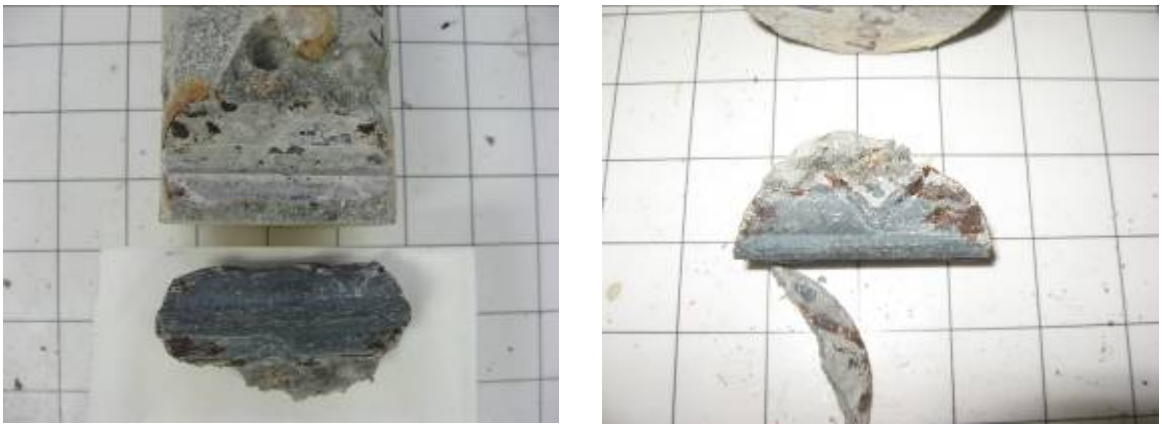

Figure 6 – Pier 6 of Sarah Long Bridge, Core #3-4 – Patchy corrosion on steel reinforcement with a cover of 5 ½''

5 Service Life Modeling - Time to Corrosion Initiation

5.1 Exposure conditions

Numerical simulations were run to predict future chloride ingress and concrete degradations. For the simulations, it was considered that the piers were massive and that at 30 inches, the concrete condition was stable. Thus only the first 27 ½ inches, from the exposed surface, were simulated. The parameters for the modeling have been presented in section 2.

The temperature of the sea water was considered since the cores were below the Mean Lower Low Water elevation (Table 1). Temperature was fixed based on data found for Wells, ME, located at 20 miles from Portsmouth, NH (source: http://tidesandcurrents.noaa.gov). Numerical simulations were run assuming the concrete was immersed in seawater with a salinity of 34‰. The concrete was exposed to 100% relative humidity from the exposed surface. The average temperature used in the simulations is 49 ± 12.5°F. Figure 7 presents the cyclic temperature used in the numerical simulations.

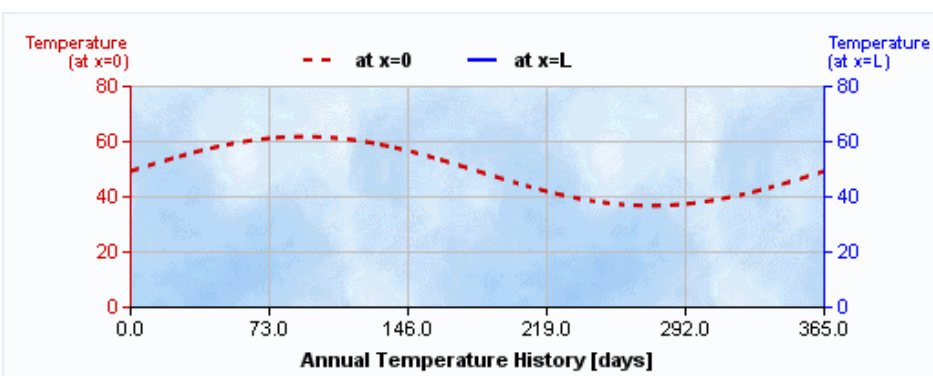

Figure 7 - Cyclic temperature used in the simulation

© Copyright – Material Service Life, LLC

Simulations were run for 69 years. From the salinity, the seawater had 530.7 mmol/L of chloride, 27.2 mmol/L of sulfate, and 51.6 mmol/L of magnesium. The concentration of chloride is considered high while for the two other ion species, the concentrations are considered low. This is typical for seawater composition on the east coast.

The mix used in the simulations was based on the results of the petrographic examinations that indicated that the water-binder ratio was approximately 0.45 and the paste content was around 30%. A 0.45 water-binder mix without supplementary cementitious materials was selected. Due to the high chloride binding potential of the concrete (see Figure 4), the cement used in the simulation was rich in SO_3 and Al_2O_3.

5.2 Numerical Model Validation

Exposure conditions were determined for both investigated structures. Figure 8 presents the experimental chloride profiles along with the numerical simulation results used to reproduce them using the exposure conditions presented earlier. A red line represents numerical simulations. It can be seen that STADIUM® simulations reproduced the actual chloride penetration relatively well.

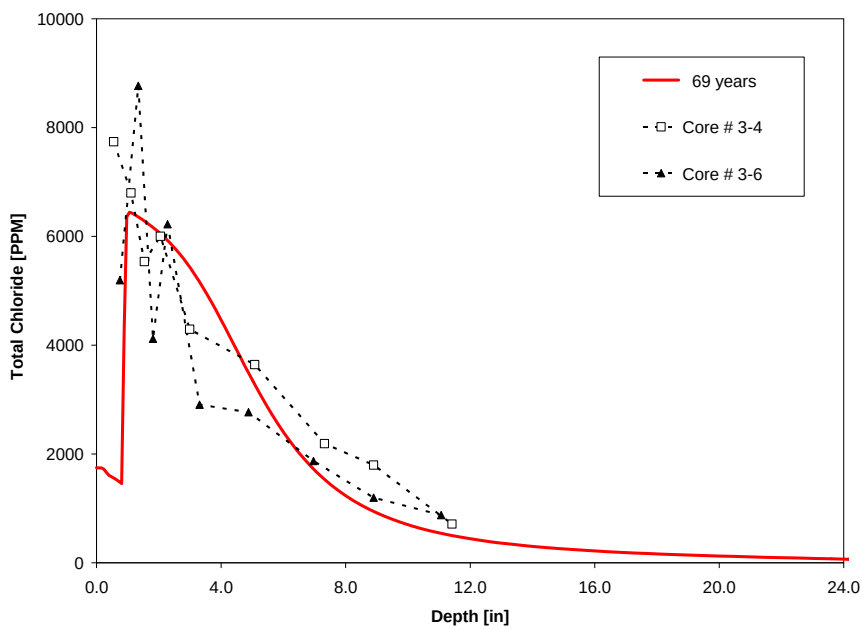

Figure 8 - Chloride profile measured on Sarah Mildred Long Bridge and STADIUM® numerical simulation

© Copyright – Material Service Life, LLC

5.3 *Future chloride penetration – no repairs*

Since chloride have already reached the rebar position (approximately 4 in. for Sarah Long Bridge), future chloride ingress for potential corrosion initiation is irrelevant. Nevertheless, simulations were performed for 50 years in the future and for different depth in concrete, the time for the chloride concentration to reach critical level is presented.

From Table 8, and considering the rebar concrete covers, the corrosion should have initiated early in the age of the structure. The corrosion propagation could have been slowed down quite considerably since the concrete is in the immersed part of the piers. In the immersed concrete, the oxygen, required for the corrosion reaction, availability is low and thus the corrosion reactions are hindered.

It should be noted that the critical chloride level will be reached for Sarah Mildred Long Bridge at a depth of 10 in. in 10 years from 2009.

Table 8 - Time to reach critical chloride concentration for corrosion initiation

Structure	Concrete Depth						
	2.5 in.	4 in.	6 in.	8 in.	10 in.	12 in.	18 in.
	Years from the time of construction*						
Sarah Long Bridge	4	12	28	50	79	114	>119

Note *: present concrete age is 69 years for Sarah Mildred Long Bridge.

5.4 *Chemical degradation – no repairs*

The analysis of chemical degradation was carried out for the concrete of piers. A numerical simulation was performed to provide information on the microstructural alterations of concrete resulting from the exposure to seawater. The sulfate and magnesium ions, present in seawater, are likely to react with the hydrated cement paste to form new compounds that have detrimental effect on the microstructure of concrete.

Upon exposure to seawater, a number of hydrated and unhydrated phases in the concrete tend to react with the migrating sulfate ions. These phases are *calcium hydroxide, tricalcium aluminate, and monosulfoaluminate*. The chemical reactions between these phases and the sulfate ions result in the formation of new products that have little cementing properties. As pointed out by Taylor[8], the formation or the dissolution of phases during sulfate attack can lead to strength loss, expansion cracking, and, ultimately, disintegration of the solid.

[8] Taylor H.F.W., (1990), *Cement Chemistry*, Academic Press Inc., San Diego, 475 p.

© Copyright – Material Service Life, LLC

Portlandite is the most soluble phase and acts as a buffer for the pore solution of concrete. The dissolution of portlandite supplies OH^- and Ca^{2+} ions and helps to maintain the pH and equilibrium of the solution. When the portlandite is dissolved, the calcium of the CSH phase starts to dissolve and the paste is weakened. The gradual dissolution increases the porosity of the paste and decreases its resistance, which causes gradual erosion of the concrete surface. Hydroxyl ions (OH^-) can be leached out by soft water as the concentrations tend to equilibrate. In seawater, the dissolution occurs even faster, because the diffusion of chlorides and sulfates (negatively charged ions) is accompanied by a counter diffusion of hydroxyl ions.

External sulfate ions can react with the aluminum phases of the hydrated cement paste to form ettringite. The reaction is essentially driven by a dissolution/precipitation process. The formation of ettringite from tricalcium aluminate and calcium hydroxide leads to a volume increase of the solid about 280% (Clifton and Pommersheim[9]).

The environmental sulfate ions may also react with the crystalline calcium hydroxide present in the hydrated cement to yield crystalline gypsum and brucite (the formation of brucite occurs only if concrete is exposed to magnesium and sulfate-bearing solution). This two-step chemical reaction first involves the dissolution of portlandite and then the formation of gypsum (and/or brucite). The formation of gypsum from calcium hydroxide yields to a volume increase of the solid about 120% (Clifton and Pommersheim[7]). The formation of brucite is usually not expansive.

Figures 9 and 10 present the solid phases for the Sarah Long Bridge at an age of 69 years and in 50 years in the future. Currently, based on STADIUM® modeling, the formation of ettringite has reached ⅞ in. This depth also corresponds to the dissolution of portlandite. For this depth, there is a risk of concrete cracking. The formation of brucite, another expensive product, has reached ⅜ in.

In the next 50 years, the chemical degradation will be limited to depth slightly higher than 1 in. No major chemical degradation should occur deep inside the concrete. In 50 years from 2009, the ettringite, and the dissolution of portlandite, will have reached 1 ⅛ in. In 50 years, brucite should have reached a depth of ½ in.

[9] Clifton J.R., Pommersheim J.M., (1994), *Sulfate Attack of Cementitious Materials: Volumetric Relations and Expansions*, National Institute of Standards and Technology, NISTIR 5390, 20 p.

© Copyright – Material Service Life, LLC

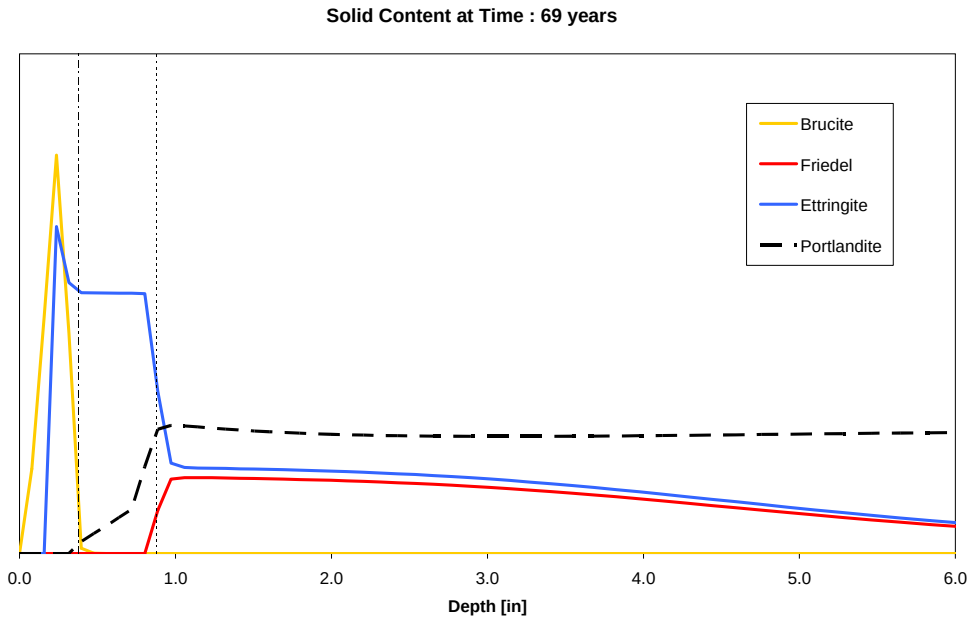

Figure 9 - Solid Phases – Sarah Mildred Long Bridge – Today

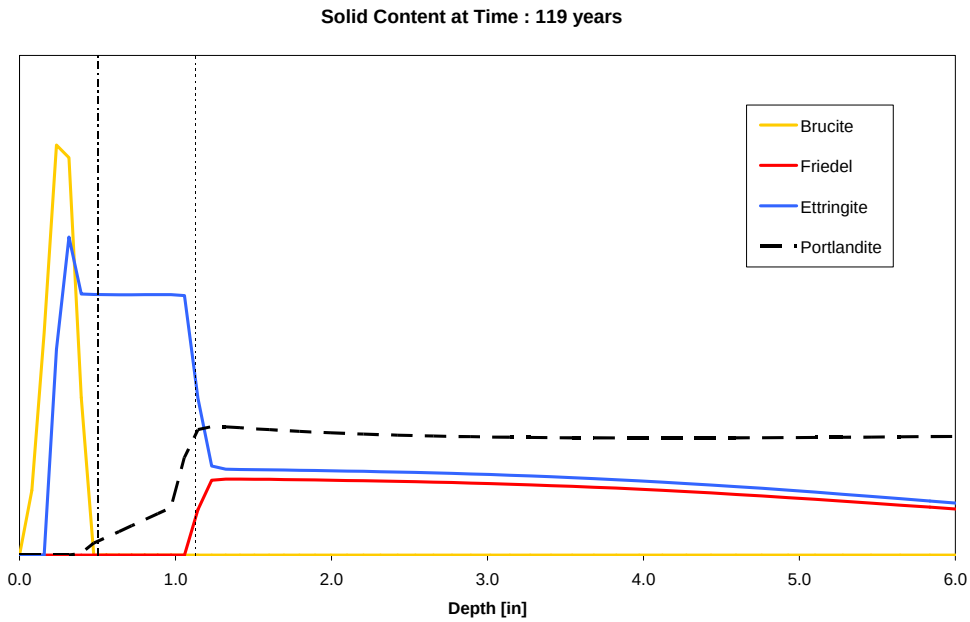

Figure 10 - Solid Phases – Sarah Mildred Long Bridge – 50 years in the future

© Copyright – Material Service Life, LLC

5.5 *Repair Options*

Two different repair options were considered and their relative durability regarding the risk for corrosion initiation was assessed. The information provided could be useful in evaluating the required depth of chloride removal to slow, or even stop, the penetration of chloride deeper in the old concrete. It is also considered that near the lower tidal zone, the concrete is as contaminated as the immersed concrete. Thus in that area, the piers require repairs and the selection of the repair materials and the depth of repair is important.

In the simulations, it was considered that new rebar were placed with a concrete cover of 3 in. Two different repair materials were considered:

1. Plain Type 1 cement concrete with a water/binder ratio of 0.35
2. Type 1 cement concrete with 20% fly ash and a water/binder ratio of 0.45

The first mixture is more a typical low water/binder ratio repair materials while the second mixture is believed to be better repair materials for the structures. In fact, mixture 2 should have mechanical properties closer to the structures' concrete, which would allow a better compatibility between the two concrete (old and new). In both cases, the repair concrete should be properly air entrained to resist the effects of freezing and thawing in saturated conditions with or without deicer salt.

5.5.1 *6-inch repair*

Figure 11 presents the chloride content evolution with time for different depths inside the concrete for a 6-inch repair with mixture 2. This type of repair stops the increase of chloride content to a depth of 10 in. or more. However, since the concrete is highly contaminated, the time to initiate corrosion for a concrete cover of 3 in. is not prevented for more than 28 years.

Moreover, the results for Mixture 1 are not presented since the difference between both concrete in preventing corrosion is negligible. Still, it is a more appropriate choice to repair with mixture 2 since its mechanical properties should be similar to the in-place concrete.

© Copyright – Material Service Life, LLC

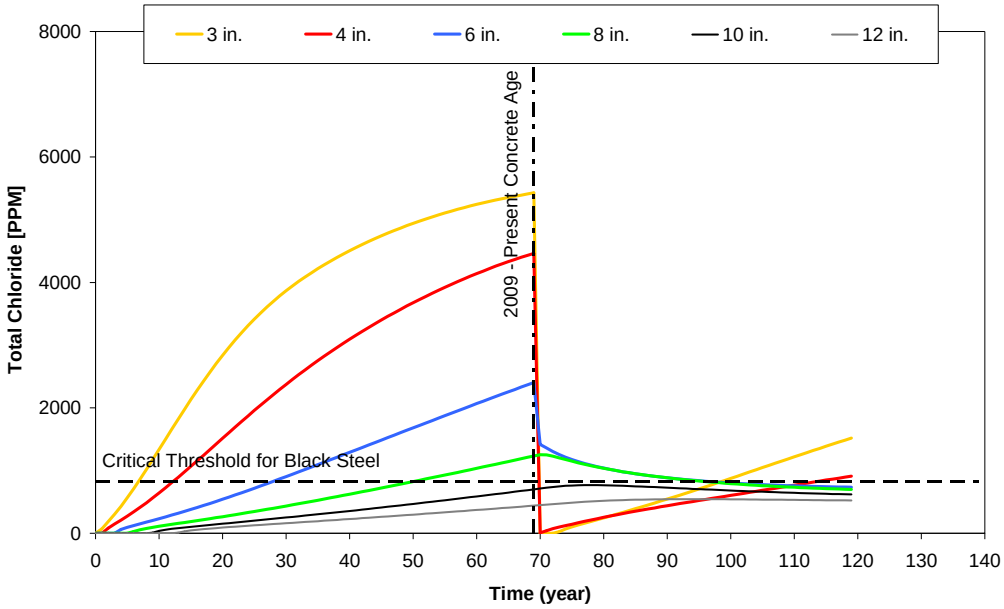

Figure 11 - Sarah Mildred Long Bridge – 6-inch repair – Mixture 2

5.5.2 *10-inch repair*

Figure 12 presents the chloride content evolution with time for different depth inside the concrete for each structure for a 10-inch repair with mixture 2. Analysis of the figure clearly shows the beneficial influence of removing old contaminated-concrete to higher depth. This type of repair stops the chloride ingress for a depth of 10 in. or more like a 6-inch repair. However, the impact is greater.

In the figure, it is shown that the chloride concentration at a depth of 3 in. inside the repair materials will reach the critical concentration in less than 50 years (i.e., 36 years). Thus, the simulations indicate that the repair material should have a certain quantity of corrosion inhibitor to increase the critical chloride content for corrosion. From our calculation, the addition of 1 gal/yd^3 of corrosion inhibitor should be sufficient to provide 50 years of corrosion protection. At 4 in. inside the repair materials, the critical chloride concentration should be reached after more than 50 years.

Moreover, the comments mentioned in the 6-inch repair regarding the mixture choice still apply.

© Copyright – Material Service Life, LLC

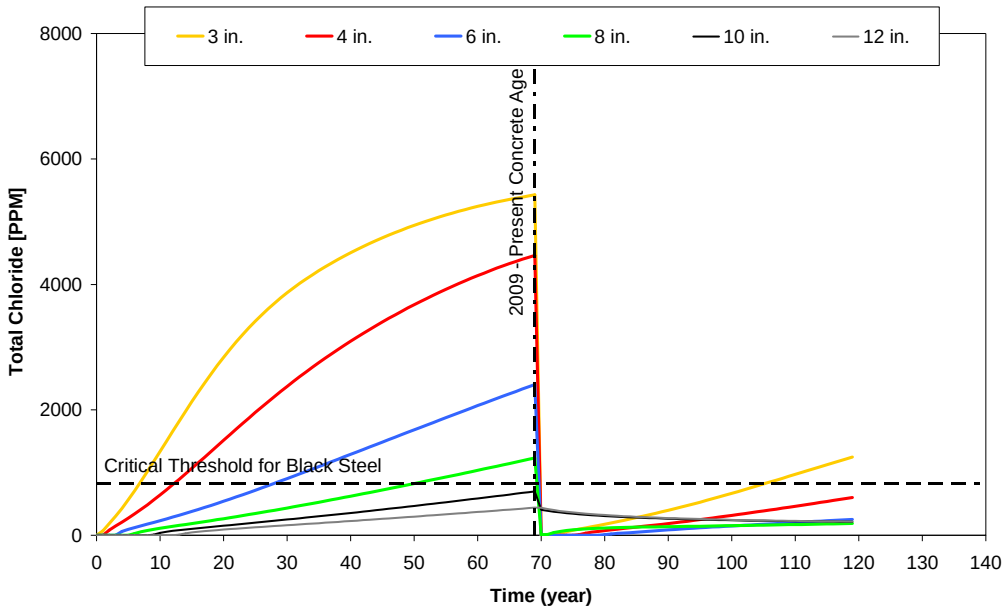

Figure 12 - Sarah Mildred Long Bridge – 10-inch repair – Mixture 2

6 Conclusion

The Sarah Mildred Long Bridge is located in Portsmouth, NH. The piers' concrete was investigated and the service life was assessed. For this mandate, a total of 6 cores from the Sarah Mildred Long bridge were extracted by Appledore Marine Engineering and sent to our laboratory for concrete test characterization. All concrete were taken on or below the low water level.

The concrete characterization revealed that the concrete inside the piers is sound and that the compressive strength is higher than 5,775 psi (39.8 MPa). Near the surface, the concrete strength was not evaluated. However, based on the Memorial Bridge investigation[10], the concrete could have low compressive strength. Moreover, the air void network characteristics revealed that the concrete does not have the properties to be frost resistant, thus making it susceptible for frost damage.

The transport properties (i.e., porosity and ionic diffusion coefficient) show that the concrete has variable properties. However, the porosity indicates that the concrete is of good quality while the ionic diffusion coefficients suggest that the concrete is porous. The chloride profiles show that the concrete is contaminated by external chlorides and is exposed to high salinity seawater. The concrete from both structures is contaminated to a depth of approximately 12 inches. Near the rebar position, the chloride concentration is

[10] Materials Service Life, LLC, Memorial Bridge and Sarah Mildred Long Bridge - Concrete Characterization and Condition Assessment - Actual and Future Deterioration, Project No.MSL09307, August 2009.

© Copyright – Material Service Life, LLC

high enough to initiate and promote corrosion. However, the observed rebars on the core show little signs of corrosion, which suggest the corrosion rate is low and the risk for corrosion underwater is low due to the lack of oxygen. This is observed in concrete located below the water level. At these depths, the oxygen availability is scarce.

Petrographic examinations were performed to characterize the concrete and to provide a general assessment of the current condition of the concrete, below the low water level, and the potential mechanism of degradation. On pier 6 of the Sarah Mildred Long Bridge, the concrete showed weak signs of external sulfate attack at the exposed surface. There were no signs of alkali silica reaction and delayed ettringite formation (DEF). The concrete in the interior of the piers was sound. The petrographic examination showed signs of chloride contaminations. It was also observed that the concrete was not air-entrained. Finally, the concrete had a water-binder ratio of 0.45.

Different numerical simulations were performed to assess the concrete state in the future (50 years in the future) and also evaluate different repair depths. Based on the contamination results, the concrete is exposed to high salinity seawater (i.e., high chloride concentration and low concentrations of sulfate and magnesium). Modeling was thus performed to predict how the degradation will progress inside the concrete within the next 50 years. In addition, numerical modeling was performed to help in the elaboration of repair strategies.

Based on the numerical simulations, the chemical degradations (mainly sulfate attack) will not affect concrete deeper than 2 inches from the exposed surface for the next 50 years. From the petrographic examinations, there are no signs of alkali silica reaction or DEF inside the concrete and there is no indication that these degradation mechanisms will occur in the next 50 years. Moreover, the concrete below the low water level is not submitted to freeze-thaw cycles and the corrosion rate seems low. Thus, the remaining service life of this part of the piers if no repair is done should be higher than 50 years, assuming the structure can tolerate 2-inches of concrete loss, the corrosion rate remain low and the exposure conditions do not change.

Repair options were evaluated for concrete area where the corrosion can propagate at high rate due to the oxygen availability or where concrete can be submitted to the effect of freeze-thaw cycles. Two different depths of the concrete repair were considered to evaluate the impact of the remaining chlorides in old concrete. The simulations considered those two repair materials:

1. Plain Type 1 cement concrete with a water/binder ratio of 0.35 and air entrained;
2. Type 1 cement concrete with 20% fly ash, a water/binder ratio of 0.45 and air entrained.

© Copyright – Material Service Life, LLC

As explained in the report, the second mixture is believed to be a better repair material for the structures (i.e., this mixture should have mechanical properties closer to the structure's concretes).

The different repair scenarios were simulated. The result revealed that a 6-inch repair stops the increase of chloride content to a depth of 10 in. or more. However, since the structure's concretes are highly contaminated, the risk for corrosion at a depth of 3 in. for 6-inch repair materials is not prevented for more than 28 years.

From the simulation results, a 10-inch concrete repair is more beneficial to the concrete contamination than a 6-inch concrete repair. A bigger repair provide more time before reaching the critical chloride concentration at a depth of 3 in. in the repair materials. However, the simulation results gave 36 years before reaching this value. Thus, it is recommended to include the presence of a corrosion inhibitor in the concrete repair materials. A dosage of 1 gal/yd^3 of a calcium nitrite corrosion inhibitor should be sufficient. At 4 in. inside the repair materials, the critical chloride concentration should be reached after more than 50 years *without corrosion inhibitor.*

Finally, it should be noted that the exposition in the tidal zone (above the low water level) is as severe as the exposition in the immersed zone. Thus, the concrete in the tidal zone should be considered as contaminated by chloride as the immersed concrete. The corrosion should propagate at a higher rate in the tidal zone where the oxygen is available. If on-site observations confirm the degradation of concrete in the tidal zone, the simulation of the repair options would be applicable for the concrete in this area. Moreover, it is more appropriate to repair with mixture 2 since its mechanical properties are similar to the in-place concrete. In all cases, the repair concrete should be properly air entrained to resist the effects of freezing and thawing in saturated conditions with or without deicer salt scaling.

MATERIALS SERVICE LIFE (MSL), LLC

Xavier Willem, Ph.D.
Project Manager

Eric Ouellet, P. Eng. M.Sc.
Director of operations

Petrograhic examination performed by

Niels Thaulow
Technical Director, Construction Materials

© Copyright – Material Service Life, LLC

Appendix A
Core Pictures

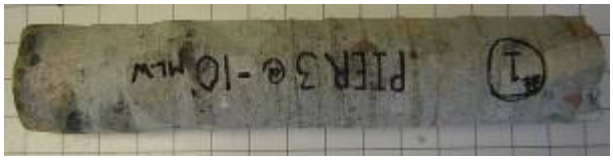

Figure A1 - core # 3-1

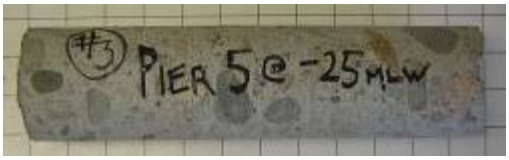

Figure A2 - core # 3-2

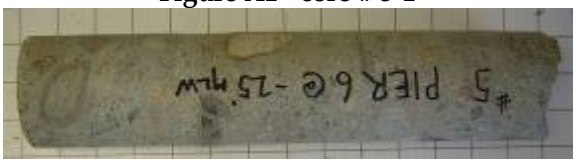

Figure A3 - core # 3-3

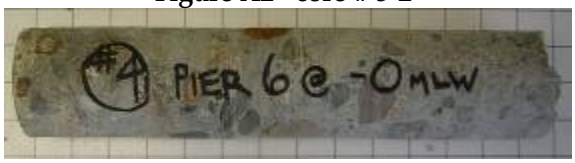

Figure A4 - core # 3-4

Figure A5 - core # 3-5

Figure A6 - core # 3-6

© Material Service Life, LLC

Appendix B
Petrographic examinations

Sample 3638016
Pier 6 of Sarah Long Bridge
3-3

© Material Service Life, LLC

Figure B1 - Pier 6 of Sarah Long Bridge, 3-3, RJLG ID 3638016. The core was cut and the thin sections were taken from the top and bottom of the right face perpendicular to the top exposed surface. The pH indicator, phenolphthalein, was applied to the left cut face.

Figure B2 - Pier 6 of Sarah Long Bridge, 3-3, RJLG ID 3638016. Stereo optical image showing corrosion products and cement paste adhering to the rebar. Image area is 8 mm wide.

© Material Service Life, LLC

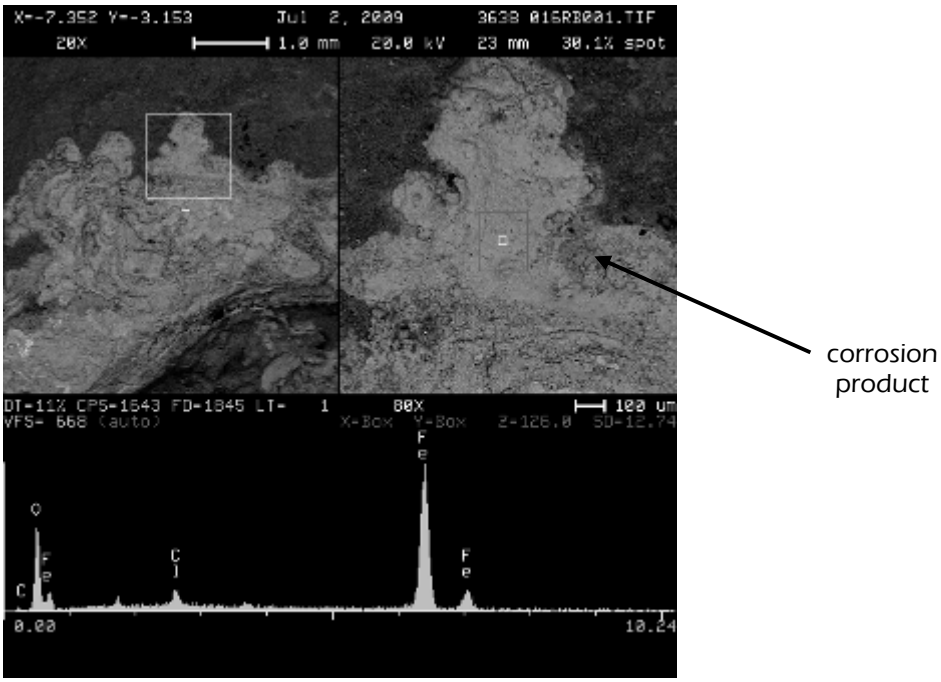

Figure B3 - Pier 6 of Sarah Long Bridge, 3-3, RJLG ID 3638016. SEM images with EDS spectrum showing chloride in the corrosion product.

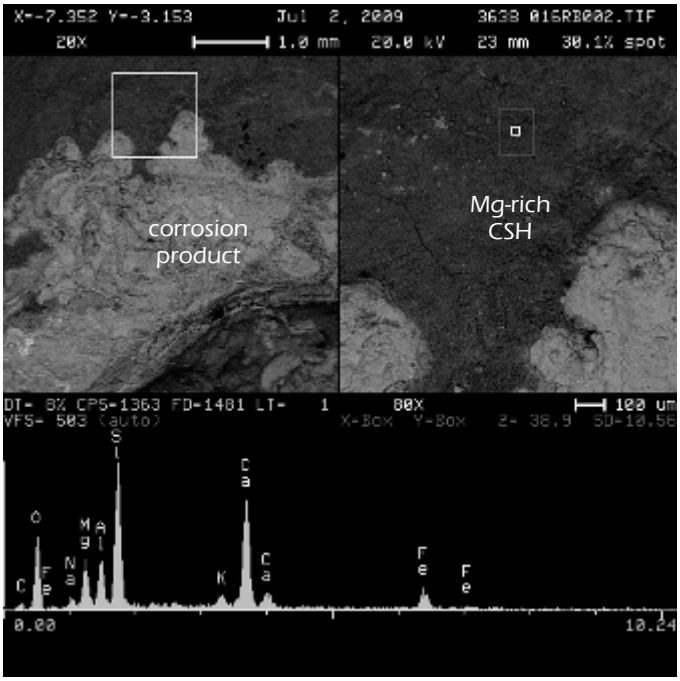

Figure B4 - Pier 6 of Sarah Long Bridge, 3-3, RJLG ID 3638016 Rebar. SEM images with EDS spectrum showing magnesium-rich CSH adhering to the rebar.

© Material Service Life, LLC

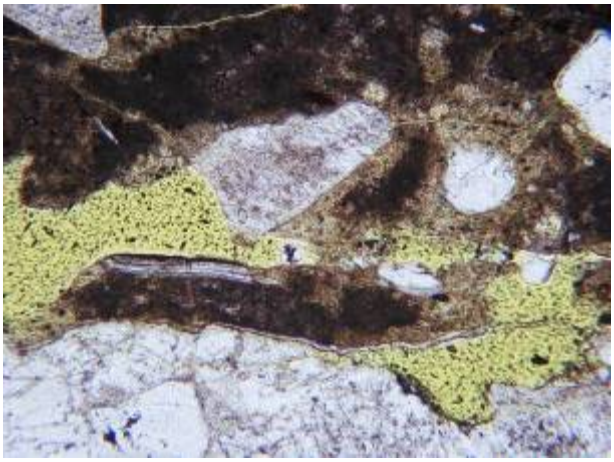

(a) Plane polars

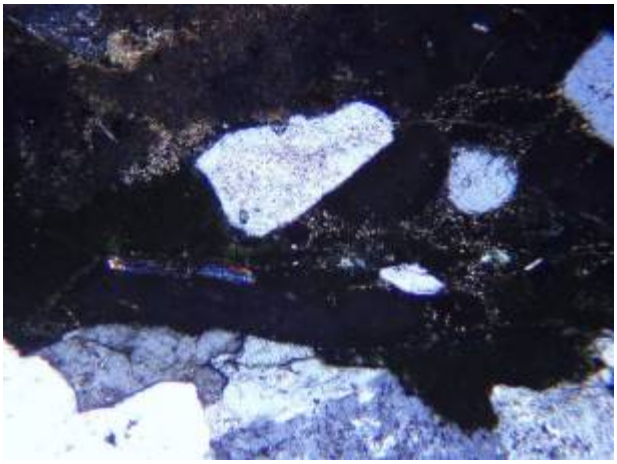

(b) Crossed polars

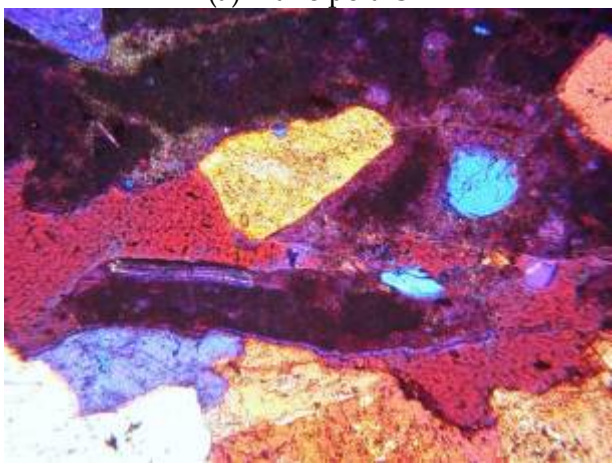

(c) Gypsum plate

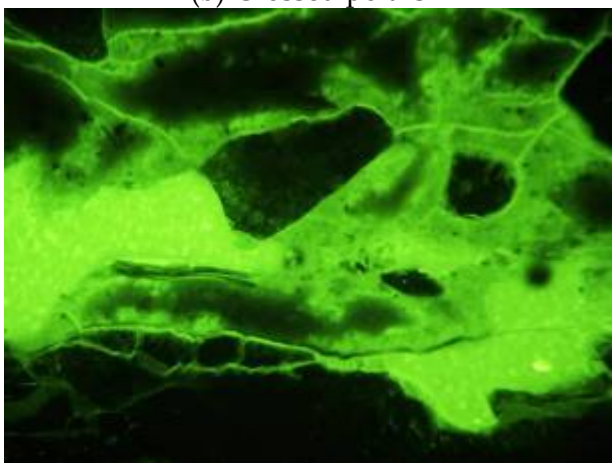

(d) Fluorescent mode

Figure B5 - Pier 6 of Sarah Long Bridge, 3-3, RJLG ID 3638016T. Optical images in different light modes showing cracks near the exposed surface. Area is 1.0 mm wide.

© Material Service Life, LLC

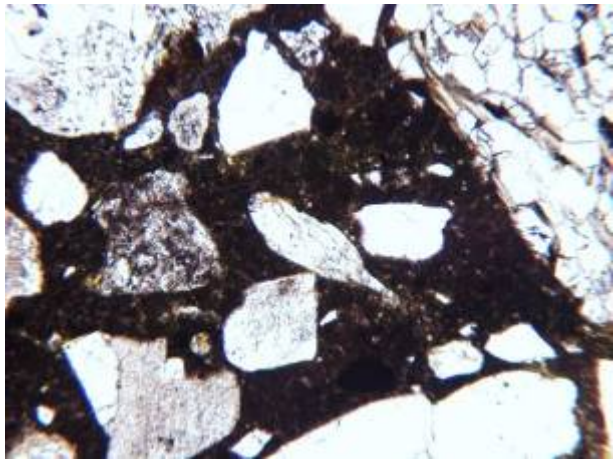

(a) Plane polars

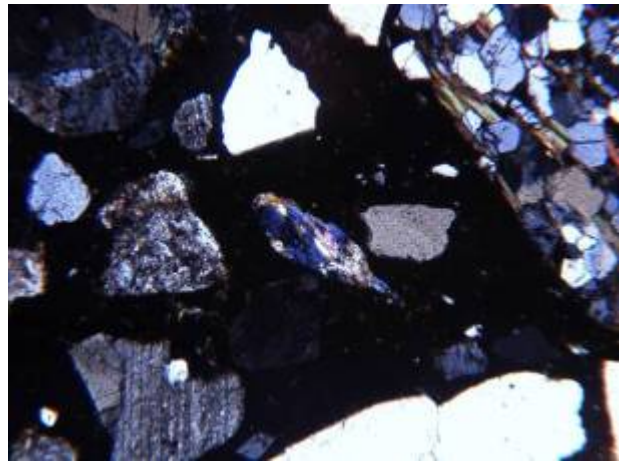

(b) Crossed polars

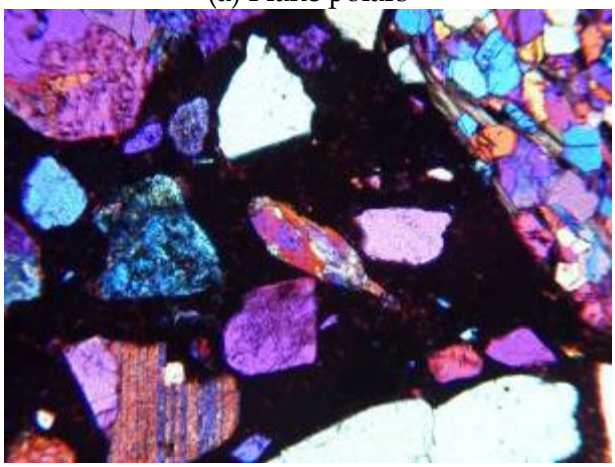

(c) Gypsum plate

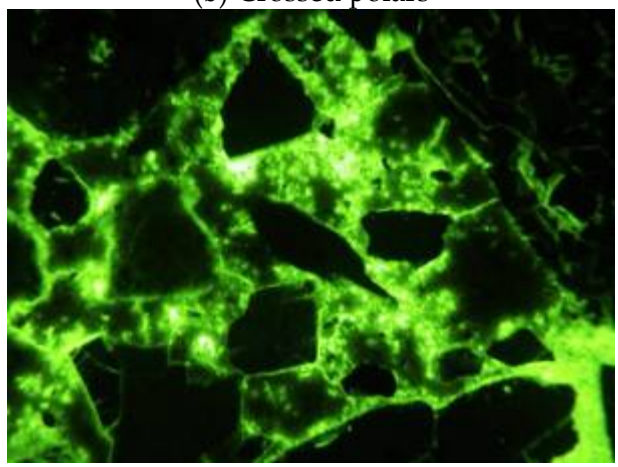

(d) Fluorescent mode

Figure B6 - Pier 6 of Sarah Long Bridge, 3-3, RJLG ID 3638016T. Optical images in different light modes showing the concrete microstructure. Area is 2.6 mm wide.

© Material Service Life, LLC

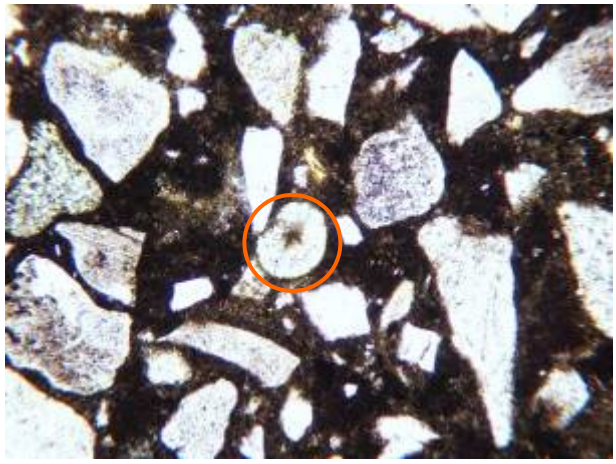

(a) Plane polars

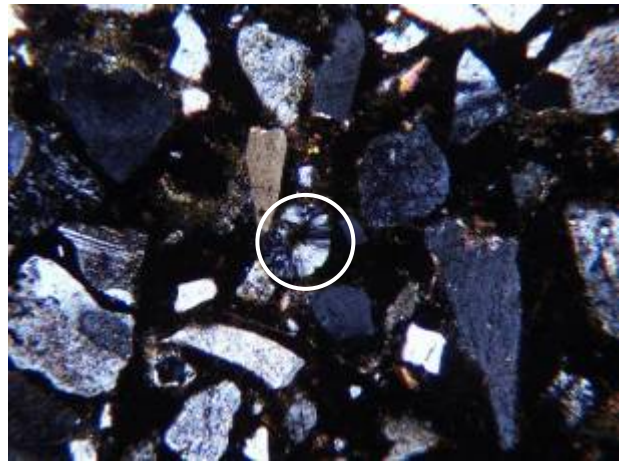

(b) Crossed polars

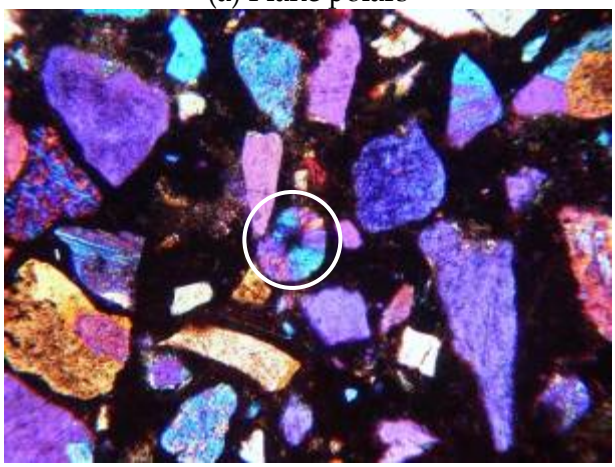

(c) Gypsum plate

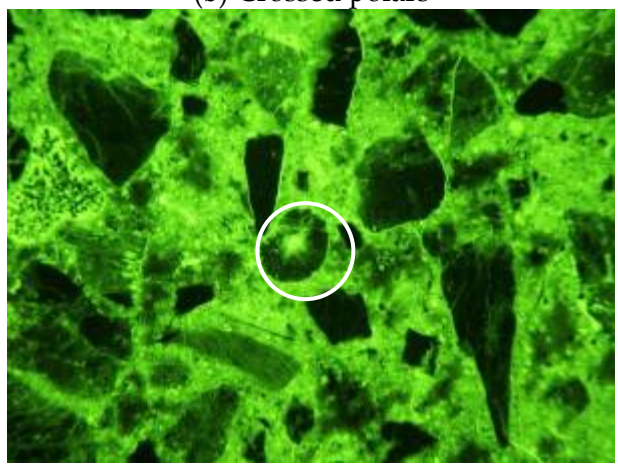

(d) Fluorescent mode

Figure B7 - Pier 6 of Sarah Long Bridge, 3-3, RJLG ID 3638016B. Optical images in different light modes showing an air void filled with ettringite (circled) in the dense paste. Area is 2.6 mm wide.

© Material Service Life, LLC

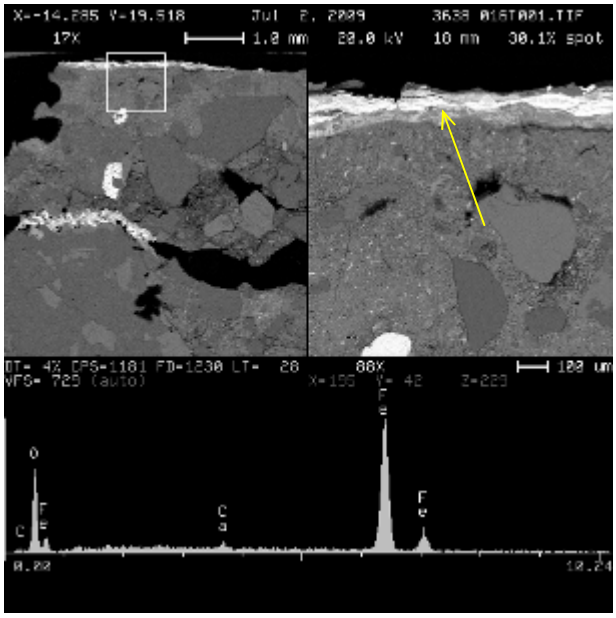

Figure B8 - Pier 6 of Sarah Long Bridge, 3-3, RJLG ID 3638016T. SEM images with EDS spectrum showing iron oxide at the exposed surface as indicated by the yellow arrow.

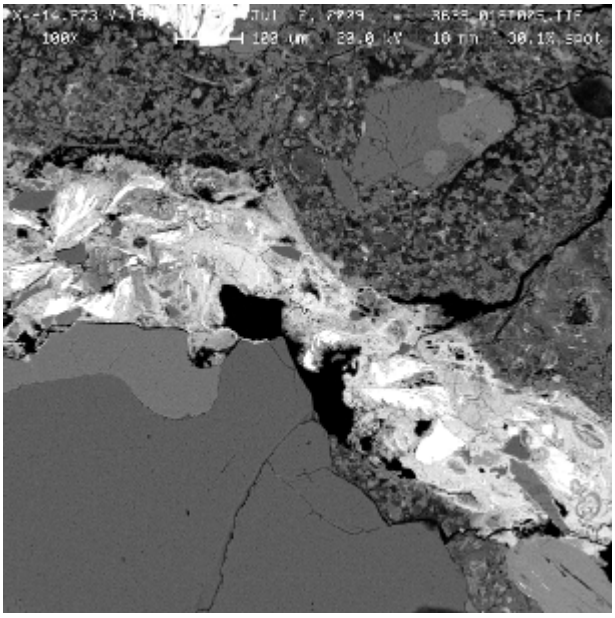

Figure B9 - Pier 6 of Sarah Long Bridge, 3-3, RJLG ID 3638016T. SEM image showing the different phase of iron oxide in a crack near the exposed surface.

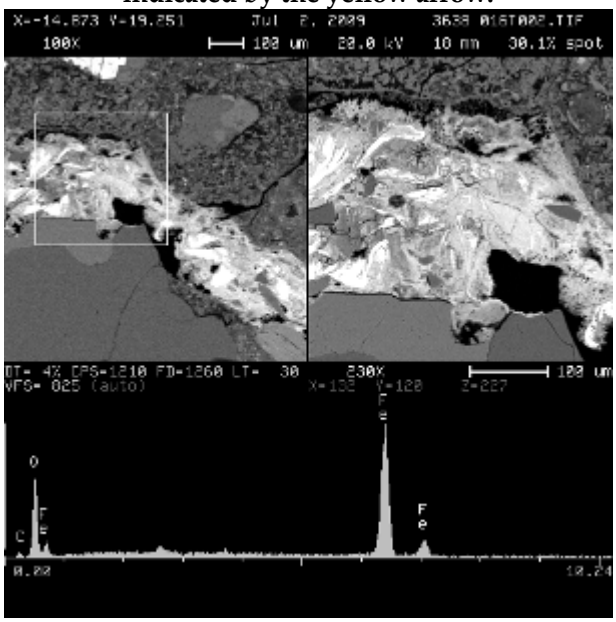

Figure B10 - Pier 6 of Sarah Long Bridge, 3-3, RJLG ID 3638016T. SEM images with EDS spectrum showing one of the iron phases in the crack. The left-hand image is the same as in Figure B46.

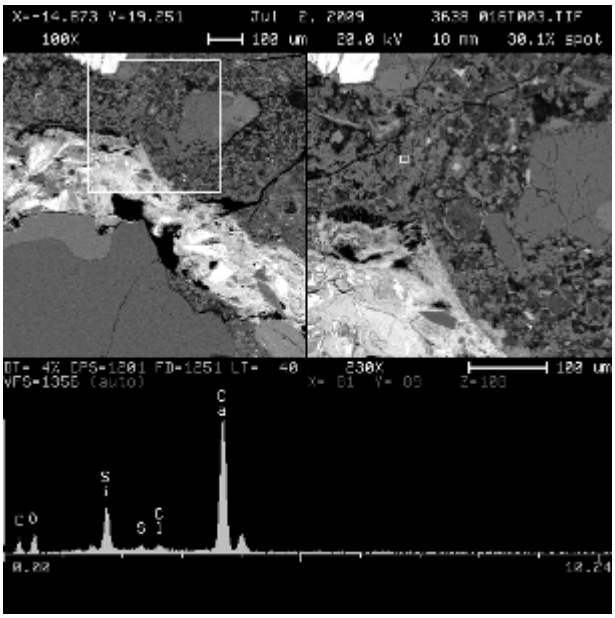

Figure B11 - Pier 6 of Sarah Long Bridge, 3-3, RJLG ID 3638016T. SEM images with EDS spectrum showing leached carbonated paste with traces of sulfur and chloride.

© Material Service Life, LLC

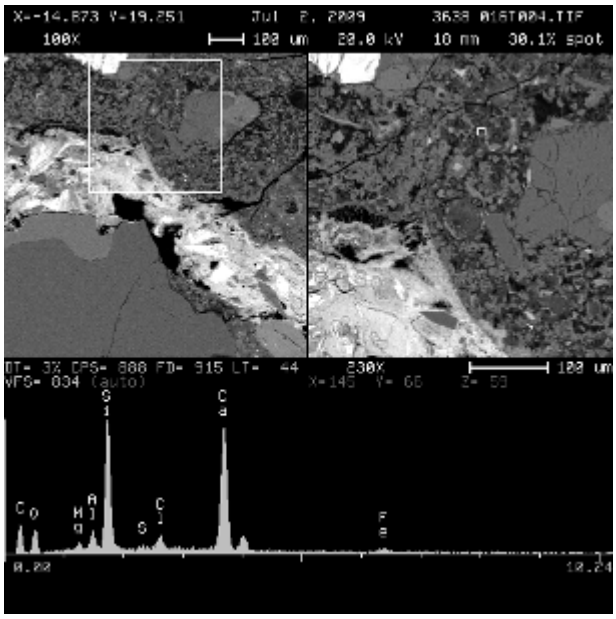

Figure B12 - Pier 6 of Sarah Long Bridge, 3-3, RJLG ID 3638016T. SEM image showing CSH with a trace of chloride.

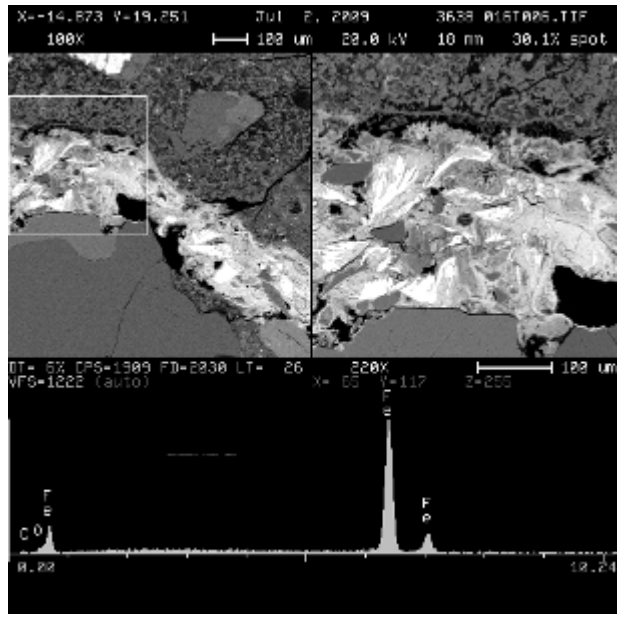

Figure B13 - Pier 6 of Sarah Long Bridge, 3-3, RJLG ID 3638016T. SEM images with EDS spectrum showing iron (bright white areas) in the crack.

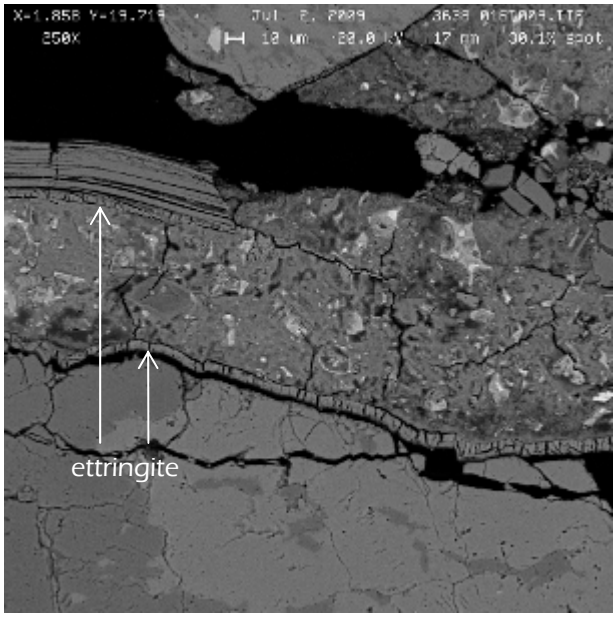

Figure B14 - Pier 6 of Sarah Long Bridge, 3-3, RJLG ID 3638016T. SEM image showing cracks parallel to the exposed surface. Some of the cracks are filled with ettringite.

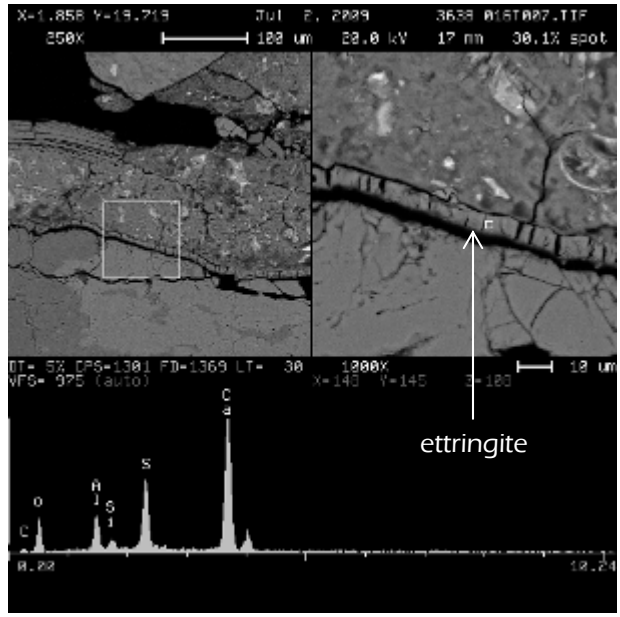

Figure B15 - Pier 6 of Sarah Long Bridge, 3-3, RJLG ID 3638016T. SEM images with EDS spectrum showing ettringite in a crack near the exposed surface.

© Material Service Life, LLC

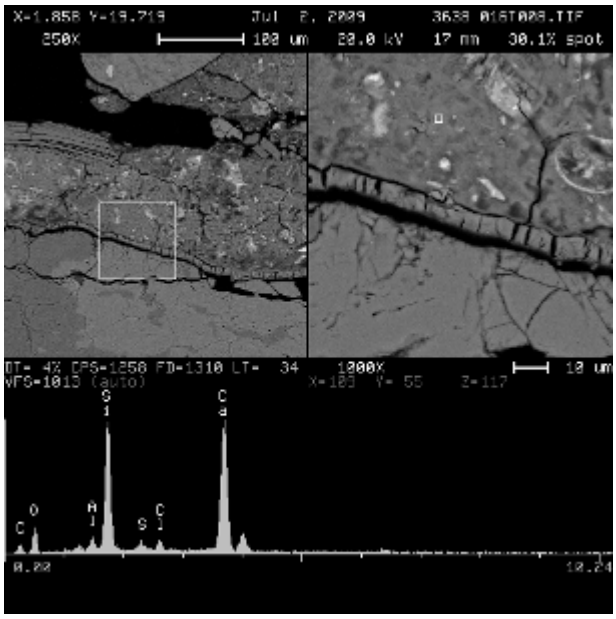

Figure B16 - Pier 6 of Sarah Long Bridge, 3-3, RJLG ID 3638016T. SEM images with EDS spectrum showing a trace of chloride and sulfur in the CSH near the crack.

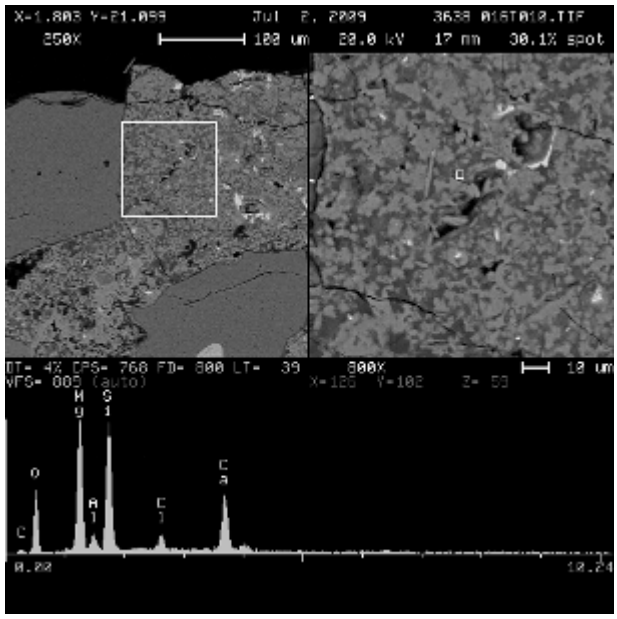

Figure B17 - Pier 6 of Sarah Long Bridge, 3-3, RJLG ID 3638016T. SEM images with EDS spectrum showing CSH converted to magnesium silicate with a trace of aluminum.

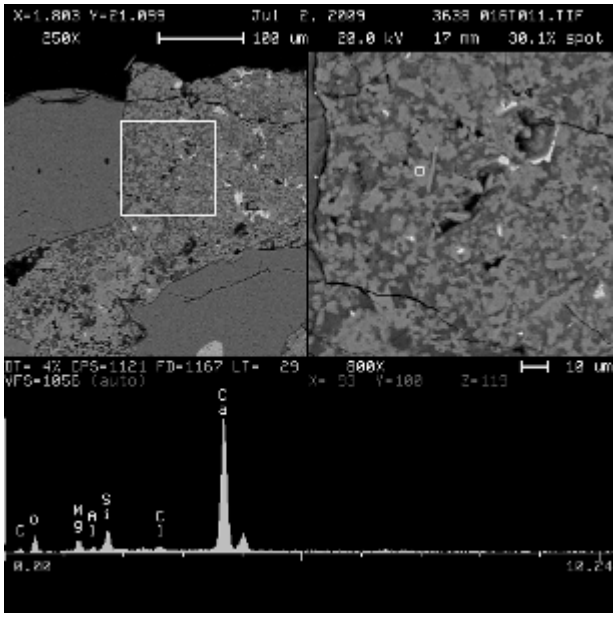

Figure B18 - Pier 6 of Sarah Long Bridge, 3-3, RJLG ID 3638016T. SEM images with EDS spectrum showing "popcorn" carbonation.

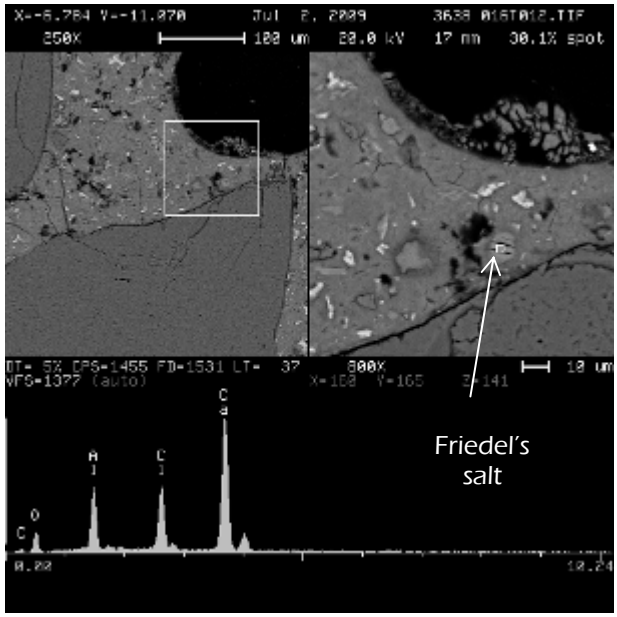

Figure B19 - Pier 6 of Sarah Long Bridge, 3-3, RJLG ID 3638016T. SEM images with EDS spectrum showing the composition of Friedel's salt in an air void.

© Material Service Life, LLC

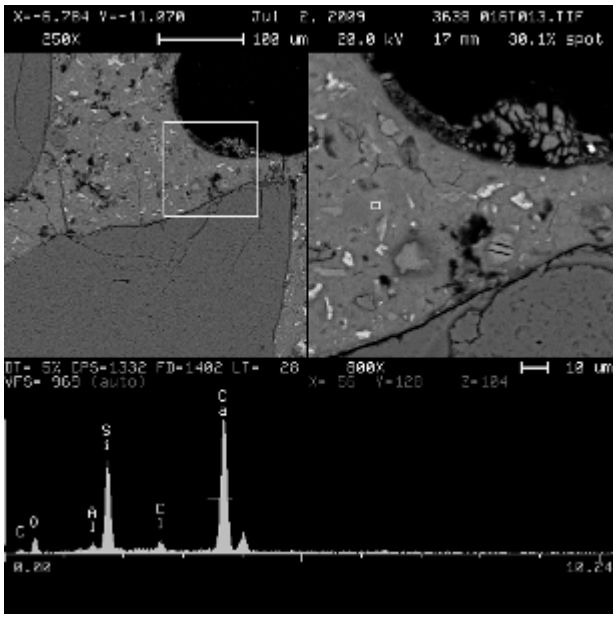

Figure B20 - Pier 6 of Sarah Long Bridge, 3-3, RJLG ID 3638016T. SEM images with EDS spectrum showing the CSH with a trace of chloride.

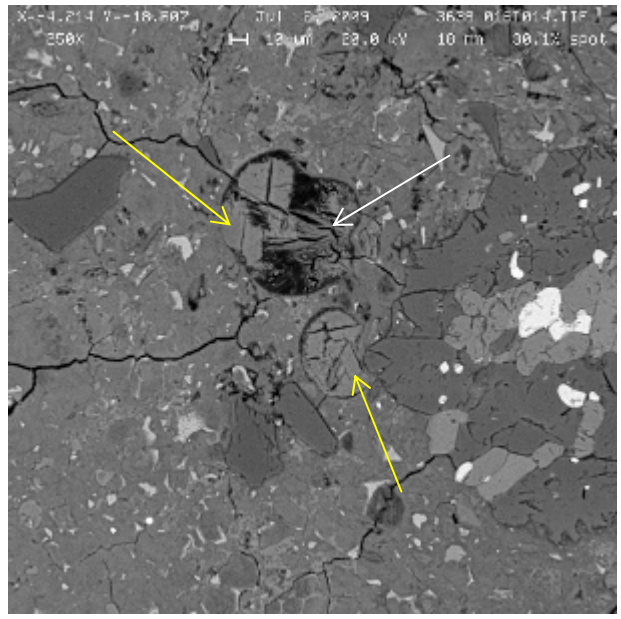

Figure B21 - Pier 6 of Sarah Long Bridge, 3-3, RJLG ID 3638016T. SEM image showing concrete microstructure at the approximately 1 ½" from the exposed surface. The air voids are filled with Friedel's salt (yellow arrows) and ettringite (white arrows).

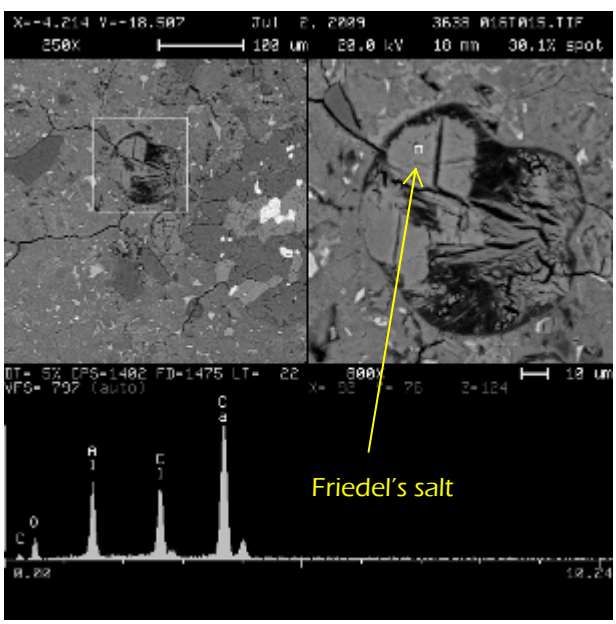

Figure B22 - Pier 6 of Sarah Long Bridge, 3-3, RJLG ID 3638016T. SEM images with EDS spectrum showing the composition of Friedel's salt in an air void near the exposed surface.

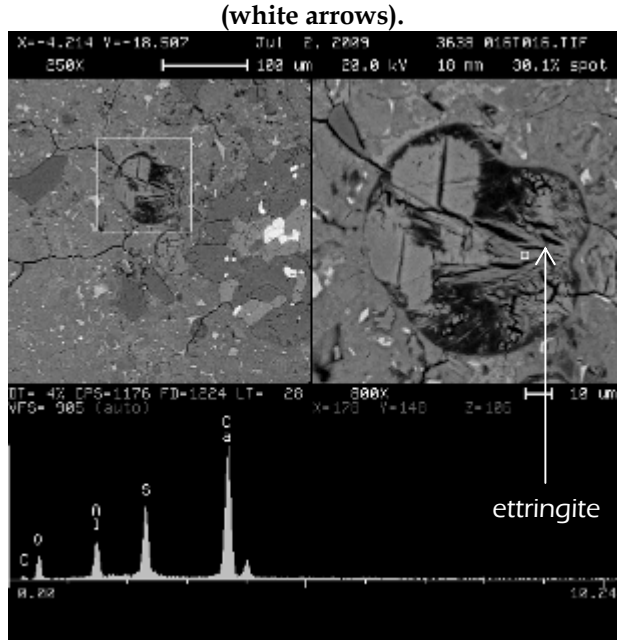

Figure B23 - Pier 6 of Sarah Long Bridge, 3-3, RJLG ID 3638016T. SEM images with EDS spectrum showing the composition of ettringite in an air void near the exposed surface.

© Material Service Life, LLC

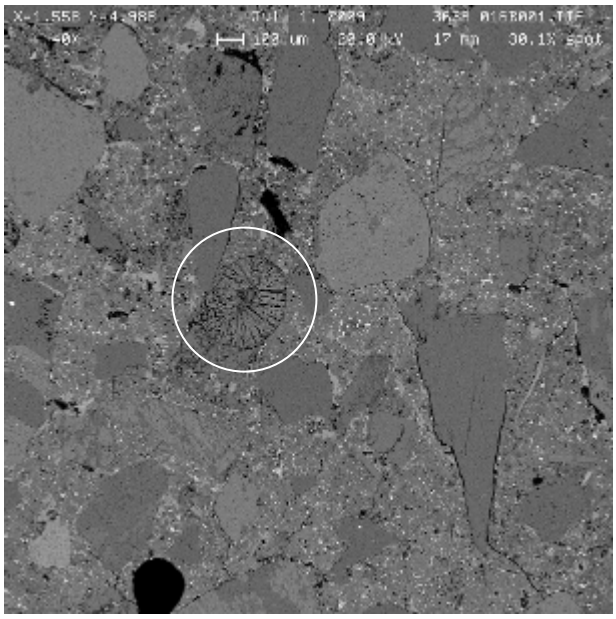

Figure B24 - Pier 6 of Sarah Long Bridge, 3-3, RJLG ID 3638016B. SEM image showing dense paste and ettringite filling an air void (circled) approximately 9″ from the exposed surface. This is the same field of view as Figure B44.

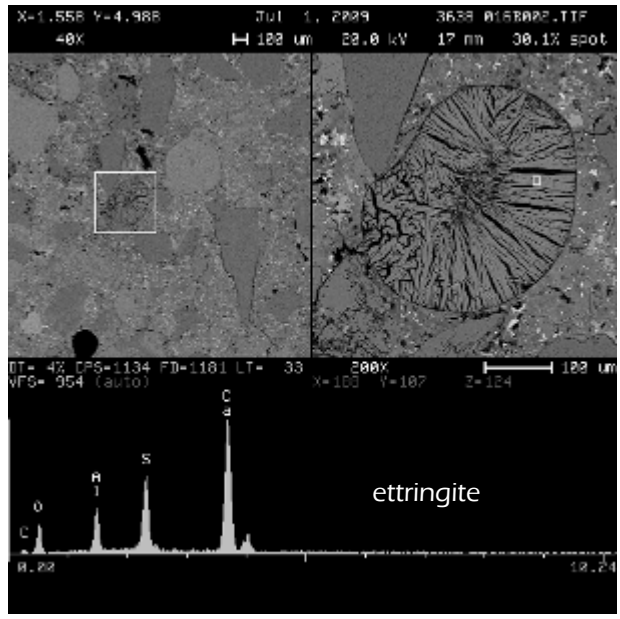

Figure B25 - Pier 6 of Sarah Long Bridge, 3-3, RJLG ID 3638016B. SEM images with EDS spectrum showing the composition of ettringite in the void.

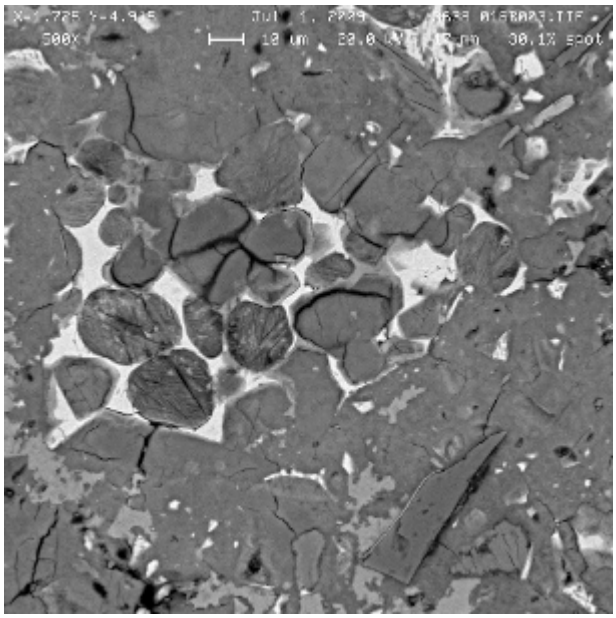

Figure B26 - Pier 6 of Sarah Long Bridge, 3-3, RJLG ID 3638016B. SEM image showing fully-hydrated cement grain.

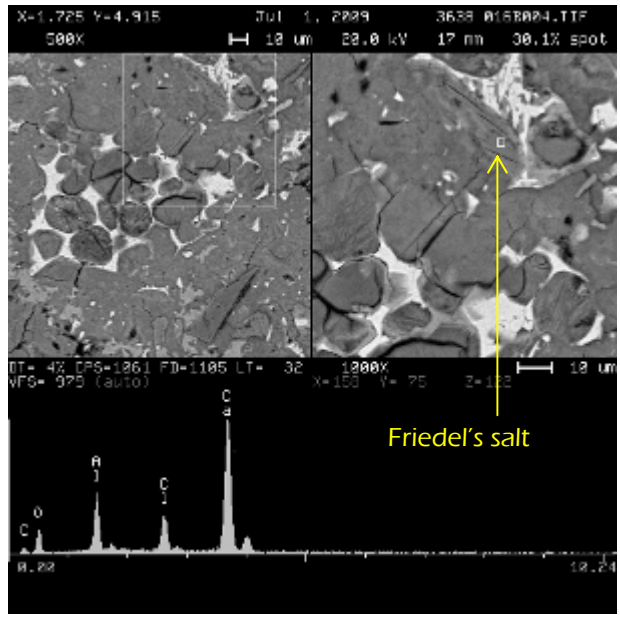

Figure B27 - Pier 6 of Sarah Long Bridge, 3-3, RJLG ID 3638016B. SEM images with EDS spectrum showing the composition of Friedel's salt.

© Material Service Life, LLC

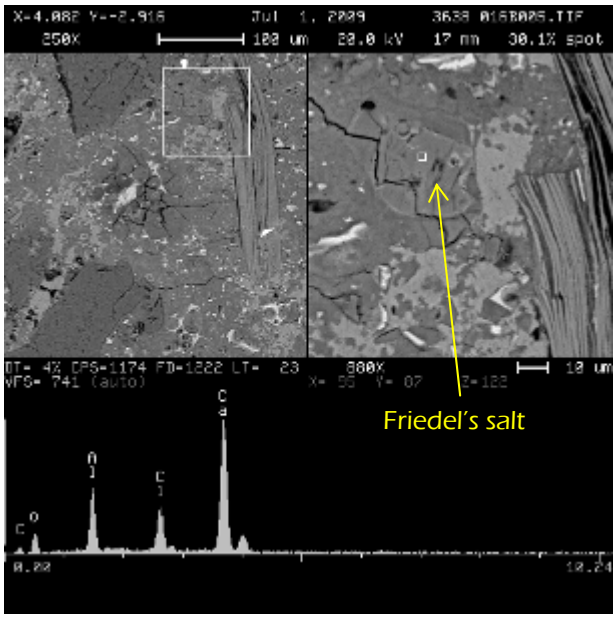

Figure B28 - Pier 6 of Sarah Long Bridge, 3-3, RJLG ID 3638016B. SEM images with EDS spectrum showing the composition of Friedel's salt.

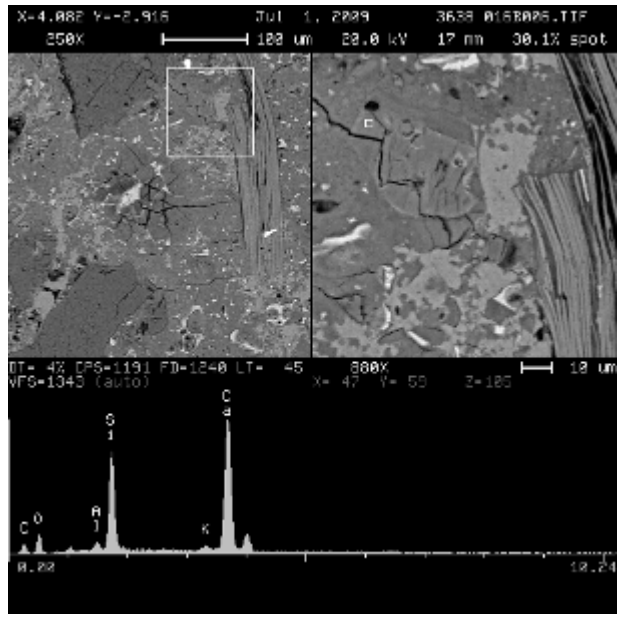

Figure B29 - Pier 6 of Sarah Long Bridge, 3-3, RJLG ID 3638016B. SEM images with EDS spectrum showing the composition of the CSH with no trace of chloride.

© Material Service Life, LLC

Mechanical and Electrical Inspection Report

New Hampshire Department of Transportation

MECHANICAL AND ELECTRICAL SCOPING STUDY FOR THE SARAH MILDRED LONG BRIDGE OVER THE PISCATAQUA RIVER

251/108

October 2009

PREPARED BY:

HDR Engineering, Inc.

1037 Raymond Blvd, 14th fl

Newark, NJ 07102

TABLE OF CONTENTS

MECHANICAL STUDY **PAGE**

1 EXECUTIVE SUMMARY M-1

2 DESCRIPTION OF SYSTEMS M-1

3 INSPECTION APPROACH AND METHODOLOGY M-2

4 INSPECTION FINDINGS M-2

4.1 OPERATING MACHINERY M-2

4.1.1 Motors, Brakes, and Mounting: M-2

4.1.2 Primary Reducer: M-3

4.1.3 Shafts and Couplings: M-3

4.1.4 Bearings: M-3

4.1.5 Rack and Pinion: M-3

4.1.6 Instrument Drives: M-4

4.2 SPAN LOCK MACHINERY M-4

4.2.1 Span Lock Operators: M-4

4.2.2 Lock Bar, Guides, and Receivers: M-4

4.3 COUNTERWEIGHT ASSEMBLIES M-5

4.3.1 Counterweight Sheaves and Bearings: M-5

4.3.2 Counterweight Ropes and Connections: M-6

4.3.3 Counterweight Guides: M-7

4.4 LIVE LOAD BEARINGS, SPAN GUIDES, AND CENTERING DEVICES M-7

4.4.1 Live Load Bearings: M-7

4.4.2 Span Guides: M-7

4.4.3 Centering Devices: M-7

4.5 SPAN BALANCE M-7

5 RECOMMENDATIONS M-8

5.1 MINIMUM REHABILITATION: M-8

5.2 MODERATE REHABILITATION: M-8

5.3 MAJOR REHABILITATION: M-9

APPENDIX A: MACHINERY LAYOUT MA-1

APPENDIX B: PHOTOS MB-1

APPENDIX C: FIELD MEASUREMENTS MC-1

APPENDIX D: FIELD INSPECTION SHEETS MD-1

TABLE OF CONTENTS (CONTINUED)

ELECTRICAL STUDY **PAGE**

1 EXECUTIVE SUMMARY E-1
2 DESCRIPTION OF SYSTEMS E-1
3 INSPECTION APPROACH AND METHODOLOGY E-2
4 INSPECTION FINDINGS E-2
4.1 MAIN ELECTRIC SERVICE E-2
4.1.1 North Approach: E-2
4.1.2 South Approach: E-2
4.2 BACK UP ELECTRIC SERVICE E-2
4.2.1 North Tower: E-2
4.2.2 South Tower: E-3
4.3 MOTOR CONTROL CENTERS (MCC) E-3
4.3.1 North Tower: E-3
4.3.2 South Tower: E-3
4.4 MOTORS AND DRIVES E-3
4.5 BRAKES E-4
4.6 PLC SYSTEM E-4
4.7 AERIAL CABLES E-5
4.8 CONTROL DESK E-5
4.9 INDICATION AND MEASURING DEVICES E-5
4.9.1 Height and skew indication: E-5
4.9.2 Span Seated Limit Switches: E-6
4.10 TRAFFIC GATES E-6
4.10.1 Warning Gates: E-6
4.10.2 Barrier Gates: E-6
4.11 SPAN LOCKS E-6
4.12 NAVIGATION LIGHTS E-7
4.13 MISCELLANEOUS E-7
5 RECOMMENDATIONS E-7
5.1 MINIMUM REHABILITATION: E-7
5.2 MODERATE REHABILITATION: E-8
5.3 MAJOR REHABILITATION: E-9
APPENDIX A: PHOTOS EA-1
APPENDIX B: FIELD INSPECTION SHEETS EB-1

MECHANICAL STUDY

1 EXECUTIVE SUMMARY

A mechanical inspection of the Sarah Mildred Long Bridge Main Movable Span was performed on June 2nd, 3rd, 4th, and October 14th and 15th of 2009. A visual inspection of all main span mechanical systems was performed including all operating machinery, counterweight ropes, live load bearings, span locks, and span guides. Measurements were taken on the gearing, counterweight sheaves, bearings, counterweight ropes including counterweight rope tension measurements to assess the condition of the mechanical systems. The design alternatives presented attempt to improve the design of the bridge machinery and provide an expected useful operating life of 25 years. Three levels of rehabilitation scope were considered, described as follows: (a) Minimum Rehabilitation which address safety and reliability issues, and should be resolved in a timely manner, (b) Moderate Rehabilitation which will further increase the life and reliability of the mechanical systems. (c) Major Rehabilitation which provide the maximum level of reliability and safety as per modern design standards. Recommendations for each level of rehabilitation are presented in section 5.

2 DESCRIPTION OF SYSTEMS

The bridge is a tower driven vertical lift span with two levels on the movable span. The upper level carries the US Route 1 Bypass highway and the lower level carries a railroad spur line going into the Portsmouth Naval Shipyard.

The operating machinery in each tower consists of two main motors driving a central parallel shaft gear box. The parallel shaft gear box drive a rack mounted on each of the counterweight sheaves which through pinions connected to the reducer output via floating shafts. Solenoid type motor brakes are mounted on each of the two motors in each tower. Machinery brakes are mounted on the floating shafts between the reducer output and the pinion gear.

There are two span locks for the main movable span, one on each end of the span. The span locks are located on the rest piers under the railroad deck. Each span lock consists of a linear actuator which direct drives a bar through a guide in the fixed span and into a receiver on the movable span.

The counterweight system for the main movable span consists of two counterweights, one in each tower connected to the span via a series of counterweight ropes supported over sheaves. There are four counterweight rope sheaves, one in each corner of the main movable span. The counterweight sheaves are supported on trunnion shafts by plain bearings. The counterweight rope connections at the span and counterweight have no means of adjusting the rope tensions at the connection point. Each counterweight has guides which engage rails along the length of the tower to ensure the position of the counterweight during travel.

The movable span has features in the form of span guides, and centering devices located on either end of the span to ensure proper position of the span while both moving and seated. The main movable span also has live load shoes in each corner to transfer the live load on the movable span to the rest piers.

3 INSPECTION APPROACH AND METHODOLOGY

A visual inspection of all main span mechanical systems was performed. This included operating machinery, counterweight rope system, live load bearings, span guides, and span locks. Various other measurements were taken to help assess the condition of the mechanical systems. Gear tooth thickness was measured using a gear tooth caliper and backlash was measured using feeler gages on all open gearing. Physical dimensions such as the rope diameter and lay length were measured using calipers on the counterweight ropes. Machinery bearing clearances and counterweight rope equalizer pin clearance were measured using feeler gages. Lastly, the rope tension of all counterweight ropes in each corner of the movable span was tested using the American Bridge method. The check of the counterweight rope tensions helped to assess the functionality of the counterweight rope equalizer.

4 INSPECTION FINDINGS

4.1 Operating Machinery

In general the operating machinery is in good condition due to recent rehabilitation work. With the exception of the rack and pinions, most of the machinery is in need of only minor attention.

4.1.1 Motors, Brakes, and Mounting:

Each tower has two drive motors with integral motor brakes. These devices are new as of a recent rehabilitation of the drive machinery and do not require any rehabilitation work. The following is the name plate information from the motor and motor brakes:

Marathon Motor

Model FHV 405THTS17034AN W
Serial#: WAA047587
405TC Frame
Max Values: 100 HP, 1335 RPM, 394 Ft.lb

Motor Brake

Stearns Brake
Mod 108204202204A
Serial #: 39598H001-3
Torque: 330 ft.lb

The machinery brakes are thruster type brakes mounted on the floating shaft between the reducer and the pinion shafts. The machinery brakes are in good condition and of recent manufacture. No significant work is required on the machinery brakes. It is suggested that as part of normal maintenance the brake set torques and clearance should be checked and adjusted as needed. At the time of inspection the West brake in the South tower was not releasing properly and the brake pad was riding against the brake wheel creating a loud squealing noise. All rehabilitation alternatives will also require minor mechanical work to support the mount of replacement brake limit switches, see Electrical section 4.5 for details of work. The following is the name plate information for the machinery brakes:

Mondel Brake

Thruster No. 23348
Size: 19MBT/E – ED121/6
Frame#: H-10472
Torque: 2000 Ft.lb Max

4.1.2 Primary Reducer:

The primary reducer is a two stage parallel shaft reducer with the following nameplate information:

Earle Gear Reducer
Ratio: 43.7:1
140 HP @ 865RPM

The overall condition of the reducer is good and there are only a few minor maintenance issues which need to be addressed for the reducer. The reducer shaft seals and housing should be rehabilitated and the oil replaced (See photo M-1). Properly functioning sight glasses and breathers should also be added to the reducers. All rehabilitation alternatives should include maintenance level work for the reducer.

4.1.3 Shafts and Couplings:

The shafting and couplings between the drive motors, gear reducers, and pinions are of various sizes and types. Overall all shafts and couplings are in good condition. It was noted during the inspection that the floating shaft between the reducer and the pinion shaft also carries the brake wheel for the machinery brake. This arrangement is not a standard way of designing a floating shaft and it puts considerable load on the bearings on either side of the floating shaft. These bearings have to support the dead weight of the floating shaft, couplings, and brake wheel in addition to the dynamic loads produced by the brake. There is no sign of significant wear in the bearings at any of these locations. It is assumed that the bearings have been sized properly for the loads, despite the non-standard design detail. Minor maintenance painting is recommended for all rehabilitation alternatives.

4.1.4 Bearings:

The operating machinery bearings consist of a two sets of bearings in each tower that support the pinion shaft. These bearings are plain type bearing with split bushings and housings. In general the bearings have only minor deficiencies and, in only a few cases, have wear beyond the standards for clearance (See photo M-2). A table of bearing clearance field measurements can be found in appendix C. In all rehabilitation alternatives the bearings will require minor work to ensure the expected design life.

4.1.5 Rack and Pinion:

The rack and pinions are used to drive the main movable span via the counterweight sheaves. The rack and pinions are the original installation on this bridge. The gear teeth show significant wear in all four corners of the movable span (See photo M-3). This poor condition of the gear teeth indicated that all of the rack and pinions are nearing the end of their service life and should be replaced. A table of gear tooth measurements can be found in appendix C. In all rehabilitation alternatives the rack and pinion gears should be replaced.

4.1.6 Instrument Drives:

There are two instrument drives per tower for height and skew indication. The primary device is a resolver coupled to one of the main trunnion (See photo M-4) the mounting for this device is not rugged and may be subject to accidental damage. The second is a resolver attached to a spring loaded real and a piece of piano wire that is attached to the counterweight. The piano wire is difficult to see and could easily be damaged. See electrical section 4.9.1 for more details, and recommendations for these devices.

4.2 Span Lock Machinery

The span locks perform the function of ensuring that the movable span is fully seated on the live load bearings when the span is in the closed position. The span locks are located under the rail deck on either end of the movable span at the rest pier. The location of the span locks are difficult to access and pose a challenge for maintenance. In addition to the difficult access, the close proximity of the span locks to the water has accelerated the corrosion of the span lock components. It would be beneficial to relocate the entire span lock assembly to a different location to allow for improved maintenance access and reduce the exposure to the marine environment at the rest pier.

4.2.1 Span Lock Operators:

The span lock operators are gearmotor driven linear actuators. The following is the name plate information off of the gearmotor:

Sterling Electric Motor
1.5 HP
1655 RPM
JDY154NDD03
C145T02 Frame
1.15 Service Factor
Serial #084023314
NEMA D Design
40A, 240/480V
Full Load Eff. 76.3

The span lock operators seem to be original installations on the bridge and have reached the end of their service life. The operators are subject to harsh conditions being located below the rail deck and in a salt water environment. Despite efforts to protect the operators, corrosion has set in and is causing multiple deficiencies at the span lock operators (See photo M-5). Regardless of the design alternatives the span lock operators should be replaced with a modern equivalent which includes features to protect the operator for the harsh environment.

4.2.2 Lock Bar, Guides, and Receivers:

The span lock bar is directly driven by the span lock operator and is supported by the lock bar guides as it passed through the structural steel of the fixed span. When the lock bar is driven, it engages a receiver on the movable span mounted on the structural steel. All of these components as well as the structural steel they are mounted on suffer from corrosion (See photos M-6 & M-7). Lubrication of these components at the time of the inspection was adequate, but given the extent of the corrosion in the area it is assumed that the function of the lock bar and receivers has been reduced by the additional strain that the corroded and worn components have created. As noted previously, all of these components suffer from

poor access, which leads to difficult in maintenance and even assessing the condition of these components. Regardless of the alternatives, the lock bar, guides and receiver should be replaced.

4.3 Counterweight Assemblies

The counterweight assemblies on the main movable span do not shown significant deterioration of condition. All components are assumed to be of the original installation. After the initial scoping inspection of the counterweight assemblies, documents in the existing plans were found that the counterweight sheaves in all 4 corners were moving laterally on the journals of the trunnion shafts. The information presented in the historical document indicates that this shift was occurring over several years between 1938 and 1940. Further measurements were not taken during the scoping inspection to determine if the sheaves have moved any further since the original documented movements.

During both lifting and lowering of the main movable span it was noted that 3 of the 4 counterweight sheave assemblies emit a periodic banging noise. This noise is usually an indication that the rope tensions in the counterweight ropes are not even in these corners.

Further investigation of the rope tensions was performed at return site visit in October where the American Bridge method of checking rope tensions was used on all ropes, in all four corners of the movable span. The resulting calculated rope tensions show that the rope tensions vary significantly in all of the corners. The worst case variation occurred in the northeast corner of the bridge where the highest varying rope was 30.14% above the mean tension and the lowest varying rope was 44.56% below the mean tension. The Southwest corner exhibited the least amount of variation where the highest varying rope was 20.78% above the mean tension and the lowest varying rope was 16.67% below the mean tensions. The variation of the rope tensions does not meet the industry acceptance criteria of 2 ½ % variation between individual ropes, as interpreted from AASHTO 1988 section 4.1.6. The summarized rope tensions for each corner can be found in appendix C.

4.3.1 Counterweight Sheaves and Bearings:

There are 4 sets of counterweight sheaves and bearings for the main movable span, one in each corner of the span. The counterweight sheaves and bearings carry the entire weight of the movable span, counterweight and counterweight ropes. All of the counterweight sheaves show signs of wear at the rope grooves that exceed the maximum allowable wear for that particular sized groove (See photo M-8). A table of the individual rope groove conditions can be found in appendix C. The rope grooves are the only aspect of the counterweight sheaves which are worn beyond acceptable limits. Other than the worn grooves, the counterweight sheaves, bearings, and shaft only have minor maintenance issues. The condition of the trunnion shaft journal and transition radius could not be assessed at the time of the scoping inspection. The trunnion bearings were not disassembled. The trunnion bearings were visually inspected and clearance measurements were taken. A table of bearing clearance field measurements can be found in appendix C. The trunnion bearing do not have any significant problems and will need minor rehabilitation work.

Also as mentioned previously, all of the counterweight sheaves were documented as having shifted on the shaft journals. It is not clear as to whether this was a localized problem at the time of construction or a continuing problem to date.

Several options are possible for the rehabilitation of the counterweight sheave rope groove deficiencies. The least costly approach would be to perform no action on the counterweight

rope grooves and allow the grooves to wear further. This approach will most likely not affect the service life of the sheave itself, but will create accelerated wear on the counterweight ropes. This wear on the counterweight ropes would be regardless of whether the existing ropes or new ropes are installed. A second option would be to skim cut the counterweight rope grooves back to a new profile and slightly smaller rope pitch diameter. This option will ensure a greater life for the counterweight ropes and have no effect on the life of the sheave. This option does assume that there is enough section material in the rim of the counterweight sheave. Finally, a complete replacement of the counterweight sheave is the most costly option, but it also guarantees a 75 year design life for the counterweight sheave.

Regardless of the work performed on the counterweight sheave in the first two options, the trunnion bearings should be cleaned and painted. An inspection of the trunnion shaft journal should also be performed. If the counterweight sheave is to be replaced, then the bushings in the trunnion bearings should also be replaced.

4.3.2 Counterweight Ropes and Connections:

The counterweight ropes are connected at the movable span and the counterweight using rope anchor castings. The rope ends are solid blocks which bear on the rope anchor casting and are held in place with keeper plates (See photo M-9). Shims are installed between the casting and the end block of the counterweight ropes to adjust the tension in the ropes.

As noted previously the counterweight rope unequal tensions are the most serious problem with the counterweight ropes and will affect the remaining effective service life. The visual inspection did not identify any serious surface or construction deficiencies with the counterweight ropes. Maintenance and lubrication of the counterweight ropes appeared to be adequate. It should be noted that the excessive build-up of grease underneath the counterweight sheaves at the counterweight rope connection to the counterweight, in all four corners, is a considerable safety hazard for maintenance personnel. The lack of OSHA compliant railing in this area and the build-up of lubricant present a significant slip and fall hazard (See photo M-10).

In all cases, the counterweight rope connections consisting of the castings at the counterweight and the lifting girder of the movable span have only minor deficiencies related to paint failure and corrosion.

Several options are possible regarding the rehabilitation of the wire ropes. The least costly alternative for the counterweight ropes would be to perform no work on the ropes. Considering that the current ropes were installed around 1988, they are approximately 20 years old and should have further operating life given proper maintenance. A moderate alternative for the counterweight ropes would be to re-tension the existing ropes so they meet the industry standard of acceptance criteria for rope tensions. AASHTO 1988 section 4.1.6 states that the counterweight rope tensions in each corner shall be equal in each rope in the corner. Industry standard states that these individual rope tensions shall be equal to each other to within 2 ½ percent. The moderate option would extend the life of the current operating ropes by evenly distributing the load over all ropes and allowing the counterweight ropes to stretch evenly over time. The major rehabilitation option for the counterweight ropes would be to replace all of the counterweight ropes. The major option would be the most cost prohibitive option but it would also ensure the longest service life of all three rehabilitation options.

In all cases of rehabilitation for the wire ropes, the anchors shall be re used and only minor painting or rehabilitation work would be associated with all of the options.

4.3.3 Counterweight Guides:

The counterweight guides are located laterally on either side of the counterweight and engage rails along the inside of the tower legs. The guides were not accessible to be closely inspected. Given the condition of the guide rail and the fact that the guides did not seem to be riding unevenly, the counterweight guides seem to be in good condition (See photo M-11). It is recommended that the counterweight guides be cleaned and painted in all rehabilitation alternatives.

4.4 Live Load Bearings, Span Guides, and Centering Devices

4.4.1 Live Load Bearings:

There are two live load bearings located at the corners of the span, on either end of the span, at the rest pier. They consist of an upper bearing half on the movable span and a lower bearing half mounted on the rest pier. The North live load bearings are expansion bearing and the South live load bearings are fixed bearings. All of the live load bearings were found to have only minor deficiencies, with no visible, significant wear (See photo M-12). Regardless of the rehabilitation alternative, it is suggested that all of the live load bearings be cleaned, painted and the lower half of the live load bearings be reset on the pier with new anchor bolts.

4.4.2 Span Guides:

There are two sets of span guides located on either end of the span. The lower set is located just below the rail deck level and the upper set is located just below the road deck level. All span guides engage a rail that runs along the inside of the tower leg. All of the span guides were found to have only minor deficiencies (See photo M-13). The span guide rails on the South tower are damaged at a location of about halfway up the travel of the movable span (See photo M-14). The damage to the span guide may present a place where the movable span can become jammed during operation. Regardless of the rehabilitation alternative, it is suggested that the span guides be cleaned, painted, and the South guide rails be straightened and repaired.

4.4.3 Centering Devices:

There is one centering device located on either end of the span at the rest pier. They consist of a socket mounted on the movable span and a guide bar mounted on the rest pier. Both of the centering devices were found to have only minor deficiencies, with no visible, significant wear (See photo M-15). Regardless of the rehabilitation alternative, it is suggested that the centering devices be cleaned, painted and the lower half of the centering devices be reset on the pier with new anchor bolts.

4.5 Span Balance

The span balance of the main movable span was not directly measured during the operation of the span. Given information from the wear on the rack and pinion teeth, and amperage readings recorded during operating it is assumed that the main movable span is span heavy through the first half of the lift. After the first half of the lift, enough of the counterweight ropes have shifted over to the counterweight side to create a counterweight heavy condition. The Sarah Long Bridge does not have any provisions to offset the weight of the counterweight ropes as the span travels from fully open to fully closed. No specific work is

recommended for the span balance. Span balance adjustment may be necessary if there is significant structural work on the movable span that may change the overall weight of the movable span.

5 RECOMMENDATIONS

5.1 Minimum Rehabilitation:

1. Operating Machinery
    a. Mounting of new brake limit switches.
    b. Rehabilitate Reducer: new shaft seals, breather and sight glass, paint housing.
    c. Clean and paint bearings, shafts, and couplings.
    d. Replace rack gear and pinion shaft.

2. Span Lock Machinery
    a. New span lock operator
    b. New span lock bar, guides, and receivers.
    c. Mounting of new span lock limit switches.

3. Counterweight Assemblies
    a. Clean and paint counterweight rope anchorages.
    b. Clean and paint counterweight Guides.

4. Live load bearings, Span Guides, and Centering Device
    a. Clean, paint, and reset live load bearings on new anchors.
    b. Clean and paint span guides, straighten South guide rails.
    c. Clean, paint, and reset centering device bearings on new anchors.

5. Span Balance
    a. No expected span balance work.

5.2 Moderate Rehabilitation:

1. Operating Machinery
    a. Mounting of new brake limit switches.
    b. Rehabilitate Reducer: new shaft seals, breather and sight glass, paint housing.
    c. Clean and paint bearings, shafts, and couplings.
    d. Replace bearing liner shims and cap fasteners, realign bearings.

e. Replace rack gear and pinion shaft.

2. Span Lock Machinery
   a. New span lock operator
   b. New span lock bar, guides, and receivers.
   c. Mounting of new span lock limit switches.

3. Counterweight Assemblies
   a. Adjust tension of counterweight ropes, clean and paint counterweight rope anchorages.
   b. Machine counterweight sheave grooves and trunnions in place.
   c. Replace counterweight sheave bearing bushings and cap fasteners.
   d. Clean and paint counterweight Guides
   e. Replace wearing surfaces on existing counterweight guides.

4. Live load bearings, Span Guides, and Centering Device
   a. Clean, paint, and reset live load bearings on new anchors.
   b. Clean and paint span guides, straighten South guide rails.
   c. Replace wearing surfaces on existing span guides.
   d. Clean, paint, and reset centering device bearings on new anchors.
   e. Replace wearing surfaces on existing centering devices.

5. Span Balance
   a. Perform initial and post construction span balance check with adjustment.

5.3 Major Rehabilitation:

1. Operating Machinery
   a. Mounting of new brake limit switches.
   b. Rehabilitate Reducer: new shaft seals, breather and sight glass, paint housing.
   c. Clean and paint bearings, shafts, and couplings.
   d. Replace bearing bushings and cap fasteners, realign bearings.
   e. Replace rack gear and pinion shaft.

2. Span Lock Machinery
   a. New span lock operator.
   b. New span lock bar, guides, and receivers.
   c. Mounting of new span lock limit switches.

3. Counterweight Assemblies
    a. Replace counterweight ropes, clean and paint existing counterweight rope anchorages.
    b. Replace counterweight sheave and trunnion shafts.
    c. Replace counterweight sheave bearing bushings and cap fasteners.
    d. Clean and paint counterweight Guides.
    e. Replace wearing surfaces on existing counterweight guides.

4. Live load bearings, Span Guides, and Centering Device
    a. Clean, paint, and reset live load bearings on new anchors.
    b. Clean and paint span guides, straighten South guide rails.
    c. Replace wearing surfaces on existing span guides.
    d. Clean, paint, and reset centering device bearings on new anchors.
    e. Replace wearing surfaces on existing centering devices.

5. Span Balance
    a. Perform initial and post construction span balance check with adjustment.

Appendix A
Machinery Layout

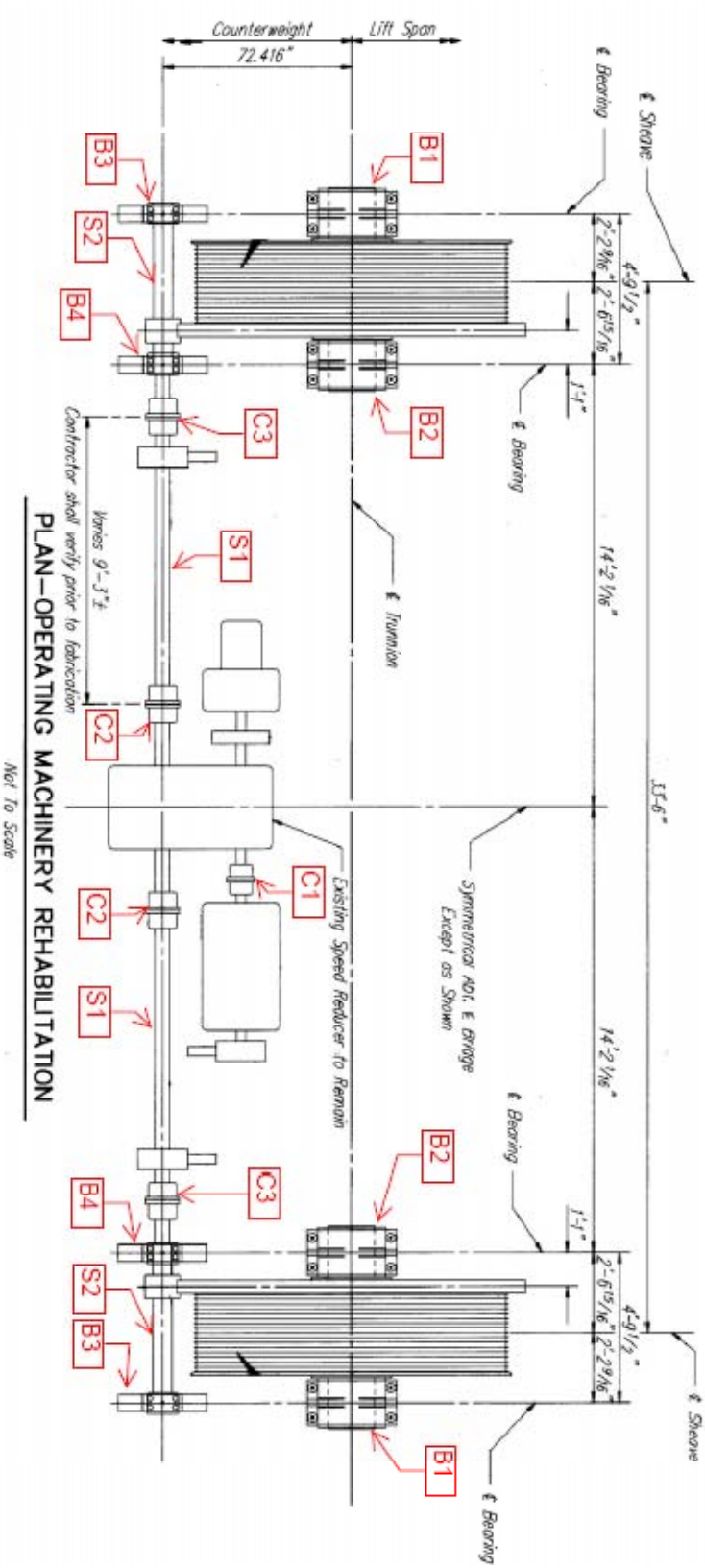
Counterweight
Lift Span
72.416"
℄ Sheave
℄ Bearing
B1
B2
B3
B4
S1
S2
C1
C2
C3
2'-2 9/16"
2'-6 15/16"
4'-9 1/2"
1'-1"
14'-2 1/16"
35'-6"
℄ Trunnion
Varies 9'-3"±
Contractor shall verify prior to fabrication
Existing Speed Reducer to Remain
Symmetrical About ℄ Bridge
Except as Shown
PLAN–OPERATING MACHINERY REHABILITATION
Not To Scale

Appendix B
Mechanical Photos

Photo M-1: The reducer shaft seals and housing should be rehabilitated and the oil replaced.

Photo M-2: The machinery bearings are plain type bearing with split bushings and housings. In a few cases, they have wear beyond the standards for clearance.

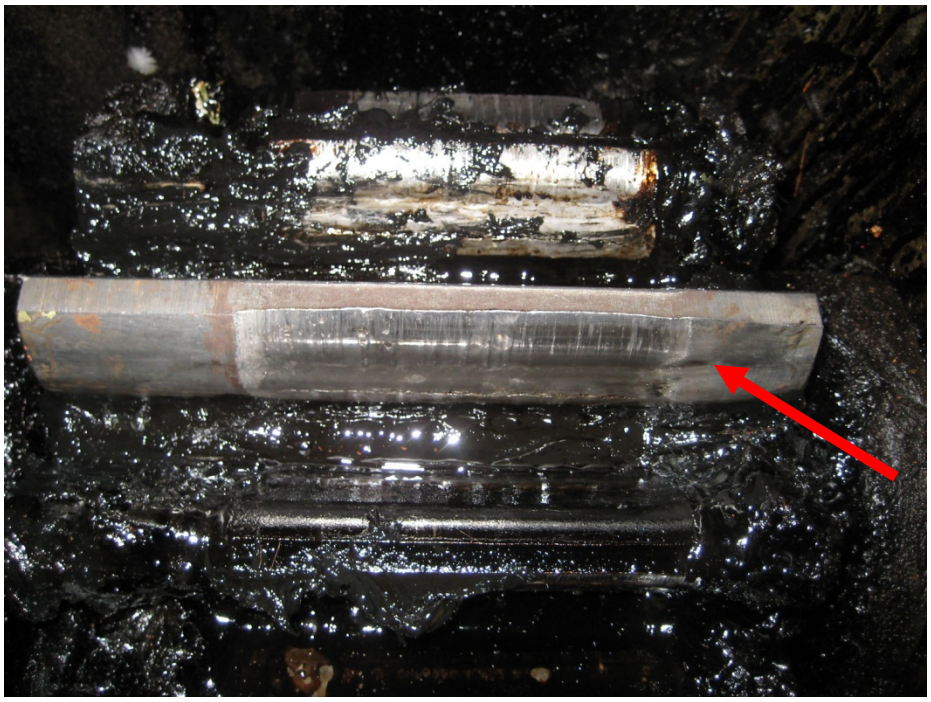

Photo M-3: The open gear teeth show significant wear in all four corners of the movable span.

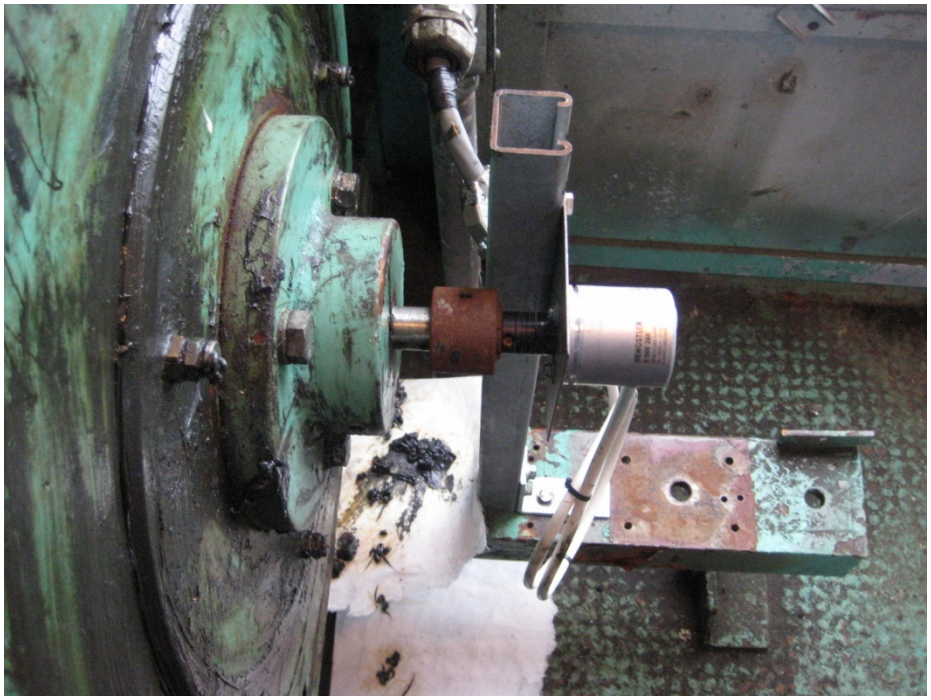

Photo M-4: The only externally mounted instrument drive is a shaft extension off of one counterweight trunnion shaft in each tower. In both towers the coupling is corroded.

Photos M-5: Despite efforts to protect the operators, corrosion has set in and is causing multiple deficiencies at the span lock operators.

Photo M-6: The span lock receiver on the movable span and the structural steel it is mounted on suffer from corrosion.

Photo M-7: The span lock guide on the fixed approach span and the structural steel it is mounted on suffer from corrosion.

Photo M-8: All of the counterweight sheaves show signs of wear at the rope grooves that exceed the maximum allowable wear for that particular sized groove.

Photo M-9: The rope ends are solid blocks which bear on the rope anchor casting and are held in place with keeper plates.

Photo M-10: The excessive build-up of grease underneath the counterweight sheaves and the lack of OSHA compliant railing in this area are a significant slip and fall hazard.

Photo M-11: Given the condition of the guide rail and the fact that the guides did not seem to be riding unevenly, the counterweight guides seem to be in good condition.

Photo M-12: All of the live load bearings were found to have only minor deficiencies, with no visible, significant wear. The northeast expansion live load bearing is shown in this picture.

Photo M-13: All of the span guides were found to have only minor deficiencies.

Photo M-14: The span guide rails on the South tower are damaged at a location of about halfway up the travel of the movable span.

Photo M-15: Both of the centering devices were found to have only minor deficiencies, with no visible, significant wear.

Appendix C
Field Measurements

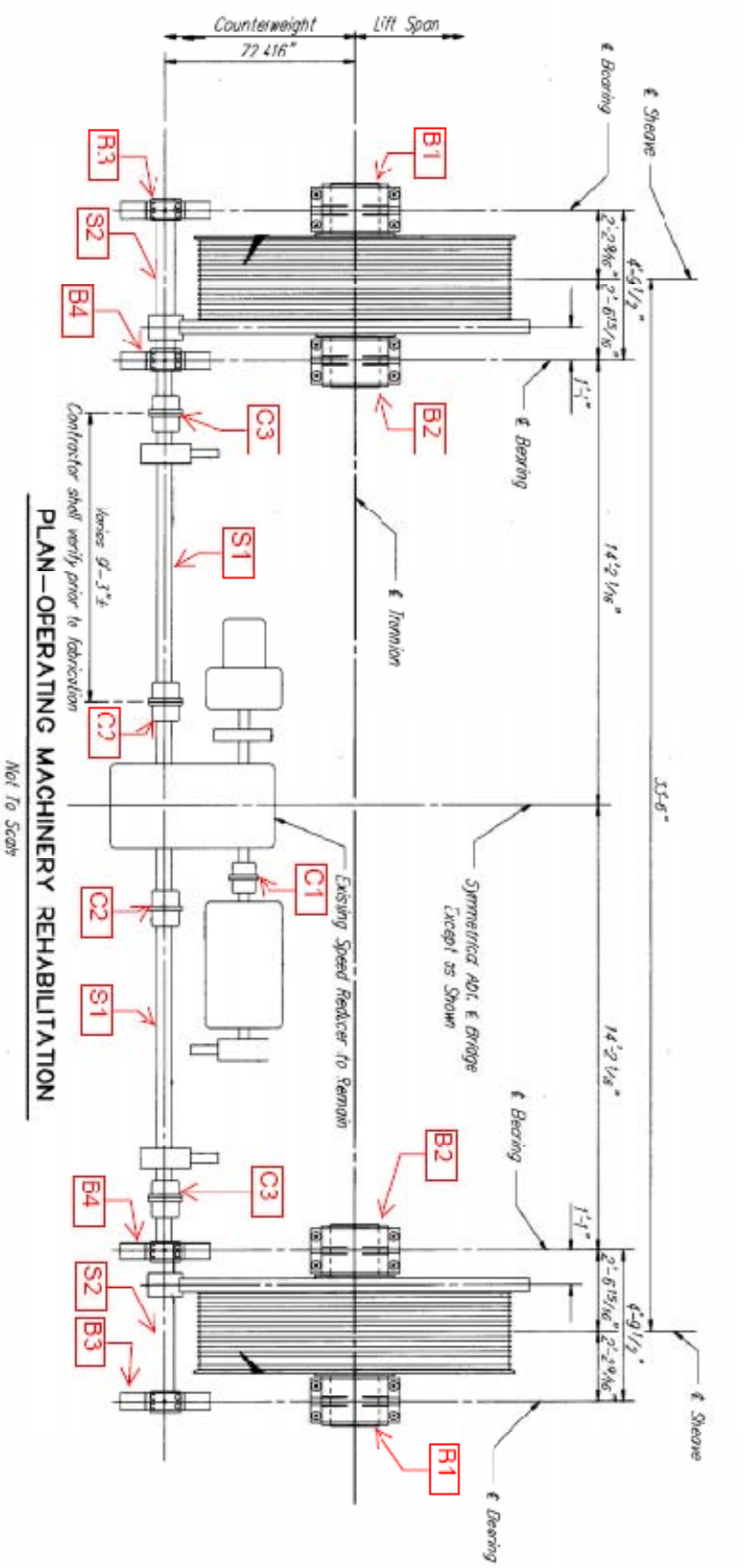
Counterweight
Lift Span
72'-4 1/16"
℄ Sheave
℄ Bearing
B1
R3
S2
B4
C3
B2
℄ Bearing
1'-1"
℄ Trunnion
S1
Konics 9'-3"±
Contractor shall verify prior to fabrication
C2
14'-2 1/16"
33'-6"
C1
Existing Speed Reducer to Remain
Symmetrical About ℄ Bridge
Except as Shown
C2
S1
B2
℄ Bearing
C3
B4
S2
B3
R1
℄ Bearing
℄ Sheave
PLAN—OPERATING MACHINERY REHABILITATION
Not To Scale

Bearing Clearances:

Bearing Mark, Location Description	Previous Clearance	Measured Clearance	Original Fit Clearance
North Tower East Bearing B1	N/A	0.120" +	0.008-0.018"
North Tower East Bearing B2	N/A	0.100" +	0.008-0.018"
North Tower East Bearing B3	N/A	0.013"	0.003-0.010"
North Tower East Bearing B4	N/A	0.007"	0.003-0.010"
North Tower West Bearing B1	N/A	0.098" +	0.008-0.018"
North Tower West Bearing B2	N/A	0.106" +	0.008-0.018"
North Tower West Bearing B3	N/A	0.013"	0.003-0.010"
North Tower West Bearing B4	N/A	0.019"	0.003-0.010"
South Tower East Bearing B1	N/A	0.062" +	0.008-0.018"
South Tower East Bearing B2	N/A	0.048" +	0.008-0.018"
South Tower East Bearing B3	N/A	0.011"	0.003-0.010"
South Tower East Bearing B4	N/A	0.017" *	0.003-0.010"

+ Bearing clearance noted is between the trunnion journal and cap, not a running fit.

*Requires immediate attention.

Bearing Clearances (Cont.):

Bearing Mark, Location Description	Previous Clearance	Measured Clearance	Original Fit Clearance
South Tower West Bearing B1	N/A	0.042” +	0.008-0.018”
South Tower West Bearing B2	N/A	0.062” +	0.008-0.018”
South Tower West Bearing B3	N/A	0.010”	0.003-0.010”
South Tower West Bearing B4	N/A	0.008”	0.003-0.010”

+ Bearing clearance noted is between the trunnion journal and cap, not a running fit.

*Requires immediate attention.

Gear Tooth Measurements:

Tooth Thickness Pinion Gears measured at addendum = 0.831” Rack Gears measured at addendum = 0.799”				
	Chordal		Backlash	
Gear Mark	**Previous**	**Measured**	**Design**	**Measured**
South Tower West Rack Gear	N/A	T- 1.200” M- 1.215” H- 1.226”	0.070-0.095”	0.079”
South Tower West Pinion Gear	N/A	T- 1.228” M- 1.127” H-1.130” Unused – 1.226”		
South Tower East Rack Gear	N/A	T- 1.164” M- 1.180” H-1.183”	0.070-0.095”	0.090”
South Tower East Pinion Gear	N/A	T- 1.200” M- 1.095” H-1.100” Unused – 1.226”		
North Tower West Rack Gear	N/A	T- 1.230” M- 1.229” H-1.225”	0.070-0.095”	Not Measured
North Tower West Pinion Gear	N/A	T- 1.105” M- 1.102” H-1.116” Unused -1.230”		
North Tower East Rack Gear	N/A	T- 1.211” M- 1.215” H-1.172” * *Plastic flow @ tip	0.070-0.095”	0.069”
North Tower East Pinion Gear	N/A	T- 1.121” M- 1.116” H-1.115” Unused – 1.198”		

Counterweight Rope Measurements:

Southwest Corner				
Rope Number	Average Period (seconds)	Tension (lb)	Deviation	Lay Length
1	5.88	19018.99 *	-11.31%	11.295”
2	5.70	20238.43 *	-4.60%	11.370”
3	5.72	20144.13 *	-5.09%	No Measure
4	5.52	21579.03 *	1.90%	No Measure
5	5.86	19192.58 *	-10.30%	No Measure
6	5.00	26332.64 *	19.61%	11.420”
7	5.79	19637.09 *	-7.80%	11.411”
8	5.44	22217.98 *	4.72%	No Measure
9	6.02	18145.15 *	-16.67%	No Measure
10	5.89	18997.46 *	-11.43%	11.517”
11	5.82	19412.93 *	-9.05%	11.560”
12	5.60	21017.23 *	-0.72%	No Measure
13	5.29	23495.02 *	9.90%	No Measure
14	5.29	23495.02 *	9.90%	11.424”
15	5.88	19062.16 *	-11.05%	11.256”
16	9.93	26723.14	20.78%	No Measure
Corner Weight (lb)		338708.97		
Average Tension (lb)		21169.31		

*A rope length of half the distance between the centerline of the counterweight sheave and the rope clamp was used, since rope was measured as a full wave.

Rope Layout at Lifting Girder:

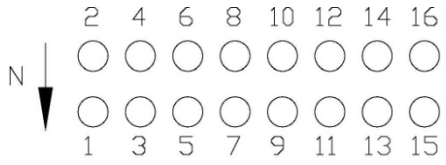

Northwest Corner				
Rope Number	Average Period (seconds)	Tension (lb)	Deviation	Lay Length
1	8.81	33901.11	3.94%	No Measure
2	9.99	26385.38	-23.42%	No Measure
3	9.32	30315.34	-7.42%	No Measure
4	7.89	42335.76	23.08%	No Measure
5	10.65	23230.95	-40.18%	No Measure
6	8.22	39003.45	16.51%	No Measure
7	10.36	24550.16	-32.65%	No Measure
8	8.45	36850.07	11.63%	No Measure
9	10.27	24966.26	-30.44%	11.481”
10	8.88	33419.08	2.55%	11.397”
11	9.58	28672.21	-13.58%	11.410”
12	8.86	33544.93	2.92%	11.369”
13	9.34	30164.12	-7.96%	11.600”
14	8.38	37468.03	13.08%	11.400”
15	9.63	28375.34	-14.77%	11.450”
16	7.42	47871.47	31.97%	11.510”
Corner Weight (lb)		521053.67		
Average Tension (lb)		32565.85		

Rope Layout at Lifting Girder:

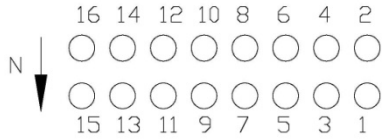

Southeast Corner				
Rope Number	Average Period (seconds)	Tension (lb)	Deviation	Lay Length
1	9.46	29445.45	-17.12%	11.412”
2	8.44	36995.81	6.78%	10.948”
3	7.79	43355.86	20.46%	11.421”
4	8.21	39098.56	11.79%	11.393”
5	8.07	40434.05	14.71%	11.340”
6	8.92	33095.17	-4.21%	11.320”
7	7.58	45870.97	24.82%	11.380”
8	9.98	26438.28	-30.44%	11.336”
9	10.21	25277.05	-36.44%	No Measure
10	10.00	26332.64	-30.97%	No Measure
11	8.92	33070.45	-4.28%	No Measure
12	9.15	31486.68	-9.53%	No Measure
13	8.55	36049.63	4.33%	No Measure
14	8.44	36995.81	6.78%	No Measure
15	7.71	44336.48	22.22%	No Measure
16	10.58	23509.82	-46.69%	No Measure
Corner Weight (lb)		551792.72		
Average Tension (lb)		34487.04		

Rope Layout at Lifting Girder:

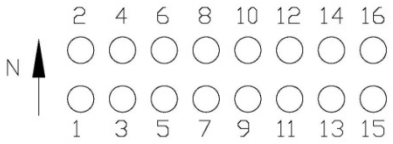

Northeast Corner				
Rope Number	Average Period (seconds)	Tension (lb)	Deviation	Lay Length
1	10.56	23598.93	-44.56%	11.533”
2	8.28	38378.15	11.11%	No Measure
3	9.45	29487.01	-15.70%	No Measure
4	7.46	47359.26	27.96%	11.485”
5	9.34	30164.12	-13.10%	11.395”
6	8.19	39225.91	13.03%	No Measure
7	10.40	24361.62	-40.04%	No Measure
8	8.18	39385.99	13.38%	11.414”
9	10.03	26175.35	-30.34%	11.300”
10	8.48	36618.67	6.84%	No Measure
11	9.43	29633.16	-15.13%	No Measure
12	8.35	37737.64	9.60%	11.344”
13	9.60	28552.91	-19.48%	11.526”
14	7.34	48832.37	30.14%	No Measure
15	8.93	33021.09	-3.31%	No Measure
16	8.89	33318.91	-2.39%	11.625”
Corner Weight (lb)		545851.09		
Average Tension (lb)		34115.69		

Rope Layout at Lifting Girder:

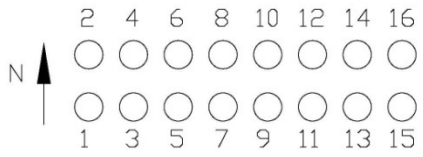

Counterweight Rope Sheave Groove Measurements:

All Grooves Measured with 1 ¾" + 3/64" Guage				
Groove Number	Northeast	Northwest	Southeast	Southwest
1	Worn	Worn	OK	Worn
2	OK	OK	Worn	Worn
3	OK	Worn	Worn	Worn
4	OK	Worn	Worn	Worn
5	Worn	Worn	Worn	Worn
6	OK	Worn	Worn	Worn
7	Worn	Worn	Worn	Worn
8	Worn	OK	OK	Worn
9	OK	OK	Worn	Worn
10	Worn	OK	OK	Worn
11	Worn	OK	OK	Worn
12	Worn	Worn	OK	Worn
13	Worn	Worn	OK	Worn
14	Worn	Worn	OK	Worn
15	Worn	Worn	OK	Worn
16	Worn	Worn	OK	OK

Groove Identification:

Northeast - 1-16, East to West

Northwest - 1-16, East to West

Southeast - 1-16, West to East

Southwest - 1-16, West to East

Appendix D
Field Inspection Sheets

Sarah Long Bridge Span Drive

Performed by: MPK

Date : 6/3/08

Tower: North South

Drive Couplings

Coupling Mark, Location	Bolts and Housing	Remarks
C-1 ~~North~~ Motor E	Coupling inspected + hubs greased, fittings installed on both sides.	
C-1 ~~South~~ Motor W	Coupling inspected, grease channels have fittings installed on both sides.	
C-2 Northeast Inboard Float	– Bolt failure – Seal leaking, hubs OK Key + Keyway OK	
C-2 Northwest Inboard Float	– leaking seal, hubs OK Bolt failure – Key + Keyway OK	

Notes:

Sarah Long Bridge Span Drive

Performed by: MPK

Date : 6/3/09

Tower: North South

Drive Couplings

Coupling Mark, Location	Bolts and Housing	Remarks
C-2 Southeast Inboard Float		
C-2 Southwest Inboard Float		
C-3 Northeast ~~Inboard~~ Float Out	Lube pk Paint failure Seals leaking	
C-3 Northwest ~~Inboard~~ Float Out		

Notes:

Sarah Long Bridge Span Drive

Performed by: MAK

Date : 6/3/08

North Tower

Operating Machinery Shafts

Shaft Mark, Location Description	Finish, Keyways, transitions, etc	Remarks
S-1 Northeast Float	scattered areas of paint failure w/ light corrosion Key & Keyway OK	
S-1 Northwest Float	↓	
S-1 Southeast Float		
S-1 Southwest Float		

Sarah Long Bridge Span Drive

Performed by:

Date :

Span Drive Open Gears

Gear Mark Location Description	Chordal Addendum	Chordal Thickness		Backlash at full closed		Notes
		Previous	Measured	Previous	Measured	
Gear ~~Northeast~~ West	0.799 80% (0.639)		T 1.230 M 1.229 H 1.225	N/A Design (0.070-0.095)		
Pinion ~~Northeast~~ west	0.831 80% (0.665)		~~T 1.241"~~ ~~M 1.215~~ ~~H 1.177~~			

T = 1.105"
M - ~~1.112~~ 1.102"
H - 1.116"
Non-Contact - ~~1.230~~ 1.230"

*Plastic flow @ tip prevents accurate measurement

Sarah Long Bridge Span Drive

Performed by:

Date :

Span Drive Open Gears

Gear Mark Location Description	Chordal Addendum	Chordal Thickness		Backlash at full closed		Notes
		Previous	Measured	Previous	Measured	
Gear ~~Northwest~~ East	0.799 80% (0.639)		T-1.211" M-1.215" H-1.172"	Poor Measurement Plastic flow (Steel)		
Pinion ~~Northwest~~ East	0.831 80% (0.665)	T-1.121" M-1.116" H-1.115"	~~T-1.211" M 1.215" H 1.172"~~	N/A Design (0.070-0.095)	Bar 24,23,22 0.069	

Non-Contact = 1.198"

GM

Sarah Long Bridge Span Drive

Performed by: KPK

Date : 6/3/09

North Tower.

Leaf Open Gears

Gear Mark, Location Description	General Condition	Lubrication	Keys	Condition of Teeth: Normal	Pitting	Rolling Peening	Abnormal: Scoring	Inter-ference	Rust and Cor.
Gear Northeast	- Heavier wear @ lift face. - Heavy plastic flow on Last Edge (Inboard)	Good	N/A		α	α	α		α
Pinion Northeast	Heavier wear on lifty face - Heavy Plastic flow @ tip				α	α	α		α

Leaf Open Gears

Gear Mark Location Description	General Condition	Lubrication	Keys	Condition of Teeth: Normal	Pitting	Rolling-Peening	Abnormal: Scoring	Interference	Rust and Cor.
Gear Northwest	-Heavier wear on lift face. -Heavy plastic flow @ westedge (Inboard)	Good	N/A		X	X	X		X
Pinion Northwest	-Heavier wear on raise face. -Heavy plastic flow @ tip.				X	X	X		X

MPK 6/3/08 North Tower

Drive Machinery

Shaft Mark, Location Description	Exterior Conditon Bolts and Housing	Remarks
Northeast Machinery Brake	- Areas of Paint failure + Corr. - Thruster shaft seal leaking. - Pads not in full contact @ set	- Brakes Mounted w/ slotted Shims - Set Torque 1875 ft.lb.
Northwest Machinery Brake	- Areas of corr + paint failure - Pad not in full contact w/ wheel @ set	↓ set Torque 1750 ft.lb
Southeast Machinery Brake		
Southwest Machinery Brake		
North Main Reducer	- Input & Output shaft seals leaking. - Areas of paint failure + corr. - Sight glass leaks. - Slight play in second stage pinion gear. - Reducer oil foaming.	- Reducer does not have a desicant breather.
South Main Reducer		

MPK 6/3/08 North Tower

Sarah Long Bridge Span Drive

Performed by: MPK

Date : 6/3/09

North Tower

Operating Machinery Shafts

Shaft Mark, Location Description	Finish, Keyways, transitions, etc	Remarks
S-2 Northeast Pinion	- Shaft covered w/ grease - some areas of light corrosion - Keys + Keyways OK	
S-2 Northwest Pinion		
S-2 Southeast Pinion		
S-2 Southwest Pinion		

Sarah Long Bridge Span Drive

Performed by: MPM

Date : 6/3/09

Drive Machinery

Shaft Mark, Location Description	Exterior Conditon, Bolts and Housing	Remarks
Northeast Motor	- No def to note. - grease fittings plugged + painted over - Nearly at best wear very close to machinery base fasteners.	Both motors marked W/ slotted shims
Northwest Motor		
Southeast Motor		
Southwest Motor		

Drive Machinery

Shaft Mark, Location Description	Exterior Conditon, Bolts and Housing	Remarks
Northeast Motor Brake	No def to note.	Hand release OK
Northwest Motor Brake		
Southeast Motor Brake		
Southwest Motor Brake		

MPM 6/3/08 North tower

Sarah Long Bridge Counterweight System

Performed by:

Date : 6/2/09

Counterweight Sheaves

Shaft Mark, Location Description	Exterior Conditon, Bolts and Housing	Rope Groove Measurements (E to W)	Remarks
Northeast	Light surf corrosion	1 n 2 y 3 y 4 y 5 n 6 y 7 n 8 n 9 y 10 n 11 n 12 n 13 n 14 n 15 n 16 n	Yes=not worn, acceptable No=worn, unacceptable
Northwest		1 n 2 y 3 n 4 n 5 n 6 n 7 n 8 y 9 y 10 y 11 y 12 n 13 n 14 n 15 n 16 n (E to W)	

Counterweight Sheaves

west to east

Shaft Mark Location Description	Exterior Conditon, Bolts and Housing	Rope Groove Measurements	Remarks
Southeast	light surface corrosion	1 yes 2 no 3 no 4 no 5 no 6 no 7 no 8 yes 9 no 10 yes 11 yes 12 yes 13 yes 14 yes 15 y 16 y	Yes=not worn, acceptable No=worn, unacceptable
Southwest		1 n 2 n 3 n 4 n 5 n 6 n 7 n 8 n 9 n 10 n 11 n 12 n 13 n 14 n 15 n 16 y	

Notes:

W to E

Sarah Long Counterweight System

Performed by:

Date :

N

Counterweight Ropes

Shaft Mark, Location Description	Exterior Conditon/Connection Condition	Rope Diameter Measurements	Lay Length Measure	Condition of Wire Rope: Broken Wires	Abrasion of Wires	Pitting of Wires	Peening of Wires	Crown Wear
Northeast	Old Caked Lube; cannot measure DIA; no corrosion; paint failure		15 11.533 14 11.485 11 11.395 10 11.414 7 11.300 6 11.344 3 11.526 2 11.625					
Northwest			1 11.510 2 11.450 3 11.400 4 11.200 5 11.369 → 11.410 6 7 11.397 8 11.481					

Sarah Long Counterweight System

Performed by:

Date :

↑N

2 0 0 0 0 0 0 0 4 6 8 10 12 14 16

1 0 0 0 0 0 0 0 0 3 5 7 9 11 13 15

Counterweight Ropes

Shaft Mark, Location, Description	Exterior Conditon/Connection Condition	Rope Diameter Measurements	Lay Length Measure		Condition of Wire Rope: Broken Wires	Abrasion of Wires	Pitting of Wires	Peening of Wires	Crown Wear
Southeast West	old caked on grease no corrosion paint failure cannot measure diameter		15	11.256					
			14	11.424					
			10	11.517					
			6	11.420					
			2	11.370					
			11	11.560					
			7	11.411					
			1	11.295					
Southwest East			2	10.948					
			4	11.393					
			6	11.320					
			8	11.336					
			1	11.412					
			3	11.421					
			5	11.340					
			7	11.380					

Notes:

HDR | ONE COMPANY *Many Solutions*™

Project:		Computed:	Date:
Subject:		Checked:	Date: 5/29/09
Task:		Page:	of:
Job #:		No:	

KC
Long Bridge
South tower

Pin add- 0.831 - 1.247
Rock add 0.799 - 1.250

	Clearance	Condition
B1W	.042	Paint failure minor surface corrosion Lube OK
B2W	.062	" " grease fitting leaks
B3W	.016	Paint failure, chipping surface corrosion lube OK
B4W	.008	Paint failure surface corrosion Lube OK may leak a little at seal
B1E	.062"	Paint failure surface corrosion lube OK Grease fitting leaks
B2E	.048	paint failure, surface corrosion grease fitting leaks Instrument removed
B3E	.011	Paint failure surface corrosion Lube OK missing cap bolt
B4E	.017	Paint failure surface corrosion

Sarah Long Bridge Span Features

Performed by: MPM, KC

Date : 6/2/08

Span Guides

Shaft Mark, Location Description	Exterior Conditon Bolts and Housing	Remarks
~~Northeast~~ upper OK ~~South~~ Exp	Could not access directly	
~~Northeast~~ OK lower ~~South~~ Expansion guide	Tube OK, Fasteners rusted. Patches of Paint failure + Pack rust on Hor. surfaces.	~1/4" clearance @ rail.
Northwest lower OK ~~South~~ exp ~~South~~ OK	Tube OK, Fasteners rusted Patches of Paint failure + Pack rust on Hor surfaces.	~1/4" clearance @ rail.
~~Northwest~~ ~~lower~~ upper ok	Could not access directly	~1/4 clearance @ rail

North catching device - even clearance about 1/8" either side
Areas of pack rust @ plate joints & fasteners.

Sarah Long Bridge Span Features

Performed by: MPK, KC

Date : 6/2/08

Span Guides

Shaft Mark, Location Description	Exterior Conditon, Bolts and Housing	Remarks
~~Southeast~~ upper ~~North~~ exp ~~North~~ OK	could not access directly.	
~~Southeast~~ lower Fixed ~~North~~ OK	Well lubricated, Bearing in hand contact along North face of rail w/ Bridge seated. - Areas of corr & paint failure on frame.	
~~Southwest~~ ~~lower~~ up. ~~North~~ OK exp	Could not access directly	
~~Southwest~~ lower Fixed	Well lubricated, Even clearance along all sides - Areas of corr & paint loss on frame.	

South centering device - Areas of corr + paint failure
- Anchor bolts & base plate have severe section loss on nuts.
- Clearance of approx 1/16" @ East, 25th on West.

Sarah Long Bridge Counterweight system

Performed by:

Date :

Trunnion Bearings

Bearing Mark Location Description	Previous Clearance	Measured Clearance	Lubrication	Bolts and Housing	Remarks
Northwest East Bearing B2	N/A	.106	↑	↑	Hasencoder ↑
Northwest West Bearing B1	N/A	.098	good Leaky seal and fittings	↑	PF SC Caked grease
Southwest East Bearing ~~B~~ B2					~~encoder~~

Sarah Long Bridge Counterweight system

Performed by:

Date :

Trunnion Bearings

Bearing Mark, Location Description	Previous Clearance	Measured Clearance	Lubrication	Bolts and Housing	Remarks
Southwest West Bearing B2	N/A				
Northeast East Bearing B1	N/A	.120	good Seal and Fittings leaky		coated on grease IFSC
Northeast West Bearing B2	N/A	.100	good Seal and Fittings leak		
Southeast East Bearing B1	N/A				
Southeast West Bearing B2					

Sarah Long Bridge Span Drive

Performed by:

Date :

Leaf Bearings

Bearing Mark, Location Description	Previous Clearance	Measured Clearance	Lubrication	Bolts and Housing	Remarks
B-3 Northeast Outboard Pinion	orig max 0.010	.013			
B-4 Northeast Inboard Pinion	orig max 0.010	.007	good lube leaky seal	PF SC caked grease	Paint failure SC
B-3 Northwest Outboard Pinion	orig max 0.010	.013	good leaky seal and fitting	some moderate corrosion on bolts	PF SC caked grease
B-4 Northwest Inboard Pinion	orig max 0.010	.019	good leaky seal	PF SC	

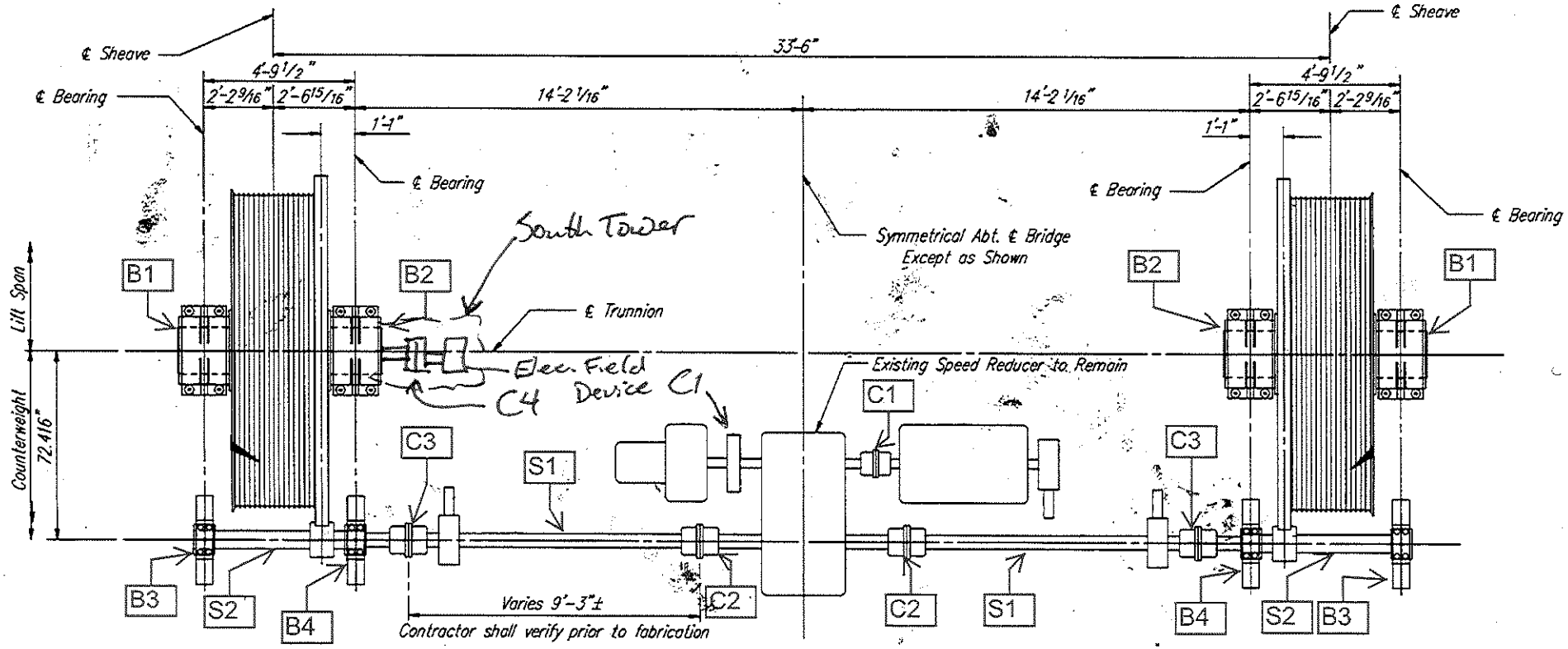

PLAN—OPERATING MACHINERY REHABILITATION

Not To Scale

HDR | ONE COMPANY Many Solutions™

Project:	Computed:	Date:
Subject:	Checked:	Date:
Task:	Page: 1	of:
Job #:	No:	

MPM

5/29/08 Sarah Long Bridge South Machinery room

Motors 405TC frame

100 HP
0 RPM - 597 ft.lb
880 RPM - 597 ft.lb
1335 RPM - 394 ft.lb

East - Motor Recent replacement
- Paint OK,
- Motor Mounted w/ dowel pins + slotted shims
- Grease fittings plugged + painted over.
- Dowel pins stick out from tabs more than 1"

West - Same conditions as east
- Motor Mounted w/ grade 5 bolts (East Mounted w/ grade 8
- Dowel pin in SE foot is broken off.

Motor Brakes

Stearns
Mod. 108204202204A
Ser. 39598H001-3
330 ft.lb

East - Hand release OK
Paint OK
Mounting OK

West - Same as East.

Reducer - No desicant breather.
- Some paint failure
- Input shaft seals leaking
- Input shafts not painted
- Output shaft seals leaking
- No sight glass
- Second stage pinion has plastic flow on the East side of the teeth (very slight)
- Foaming of gear box oil.

HDR | ONE COMPANY Many Solutions℠

Project:		Computed:	Date:
Subject:		Checked:	Date:
Task:		Page: 2	of:
Job #:		No:	

5/29/09 Sarah Long Bridge South Tower

Machinery Brakes -

East - set Torque ~1750 ft.lb.

Mondel
Thrust No. 23348
Size: 19MBT/15 - ED121/6
Frame #: H-10472
Torque 2000 ft.lb max

- Areas of corr. paint failure on frame
- Brake Mounted with slotted shims
- Pads not making even contact, B/W corroded on wear surface.
- Hand release ok.
- NW upper pin does not seem to be fully seated.

West - set Torque 1575-1600 ft.lb.

- Areas of corr. paint failure on frame.
- Brake Mounted w/ slotted shims
- Thruster OK, B/W OK
- West Brake does not completely release upon operation. Brake makes a loud squealing noise.
- Pads are not in even contact on set

HDR | ONE COMPANY *Many Solutions*™

Project:		Computed:	Date:
Subject:		Checked:	Date:
Task:		Page: 3	of:
Job #:		No:	

Sarah Long Bridge 5/29/09 South Tower

Shafts

S1 East - Painted OK, Keys OK.

S2 East - Pinion shaft covered w/ grease. Key + Keyway covered w/ grease.

S1 West Painted OK, Keys OK.

S2 West - Pinion shaft covered w/ grease, Key + Keyway OK

East Trunnion Shaft - Shaft end has paint failure + corr.
- Fittings OK

West Trunnion Shaft - shaft end has paint failure + corr.
- Instrument drive mounted off East end of shaft.
- Fittings OK

Couplings

C1 East - Not painted slight corr. on hub, installed w/ 2 grease fittings

C2 East
C3 East - Painted OK, Seal leaking, fittings plugged.

C1 West - Not painted, slight corr on hub, installed w/ 2 grease fittings.

C2 West
C3 West - Painted OK, fittings plugged
C3W - leaky seal

C4 - coupling C4 is a combination indexing + flex couplings together.
Indexing coupling is corroded, and fasteners on flex are corroded.

HDR | ONE COMPANY *Many Solutions*™

Project:	Computed:	Date:
Subject:	Checked:	Date:
Task:	Page: 4	of:
Job #:	No:	

South Long Bridge 5/29/09 South Tower.

Trunnion Sheaves -

East - Areas of corrosion on interior.
- Grease covering most of Exterior

Rope groove condition

West - Areas of corrosion on interior
- Grease covering most of exterior

Rope groove condition

HDR | ONE COMPANY *Many Solutions*™

Project:		Computed:	Date:
Subject:		Checked:	Date:
Task:		Page: 5	of:
Job #:		No:	

Sarah Long Bridge 5/29/09 South Tower

Open Gears

West

Rack - ~~Plastic~~ flow, slight corrosion, scoring, pitting, undercutting of dedendum

Tooth thickness T 1.200

Backlash - 15+17 ~~+~~23+24 M 1.215
0.079" H 1.226

Pinion - Plastic flow + pitting, scoring. slight corrosion

plastic flow at top land prevents accurate measurement

Tooth thickness
T - 1.228
M - 1.127
H - 1.130
unused Tooth 1.226

East

Rack Plastic flow scoring, pitting, under cutting slight corrosion

Backlash 21,22,23,24 T 1.164
0.090" M 1.180
H 1.183

Pinion Plastic flow, scorring, pitting, slight corrosion

Plastic flow at top land prevents accurate measurement of ~~th~~ T 1.200
1.095
H 1.100

unused tooth 1.226

HDR | ONE COMPANY *Many Solutions*℠

Project:	Computed:	Date:
Subject:	Checked:	Date:
Task:	Page:	of:
Job #:	No:	

6/2/04 Sandy Lake Bridge

North Span Lock.

- Receiver + guides - Dirt shield above guides not secured.
- All Receivers + guides have Pnt failure + corr w/ some areas of pack rust on housing + fasteners

Receiver could not access.

Front Guide
Top ~ 1/16"
Bottom - hard contact

Rear Guide
Top West 25 thou
Bottom 0.005"
East - ~15 thou

- Lockbar - Lubrication is adequate some light corr. @ lock bar end.
  - Top of lock bar @ linear actuator is scored and covered w/ grit.
- linear actuator. Areas of pnt failure on housing w/ fasteners.
  - operation OK.
  - Grease fittings have been painted over.
  - corrosion of mating steel and shims
  - seal housing + fasteners completely corroded.

HDR | ONE COMPANY Many Solutions™

Project:	Computed:	Date:
Subject:	Checked:	Date:
Task:	Page:	of:
Job #:	No:	

6/8/08 Salmon Long Bridge

South Span Lock

1.5 HP 1655 RPM
Sterling Electric motor
JD Y 254NDD03

Frame C145TDZ
service factor 1.15
Serial 084033314
nemp design D
40 A
240/480 V
Full load Eff 76.3

Linear actuator - corrosion on housing + fasteners throughout.
- Peak rust on mostly fasteners + footy.
- Shaft cover worn no longer connected.
- No Protection above unit.

Guides + Receiver

Rear guide - corrosion and peak rust on fasteners. (on all guides + Receivers)

Clearance Rear: Bottom 25 thou
West 25 thou
East - 15 thou
Top. - 15 thou

Clearance Front: - No clearance top
Side 25 thou
Top 1/16

Lock bar - Poor lube in spots w/ corr and scoring on top of bar.

Performed by: MPK, KC

Date : 6/2/09

Live Load Bearings

Shaft Mark, Location Description	Exterior Conditon, Bolts and Housing	Remarks
~~Northeast~~ Exp	- Areas of paint failure + corr. - fretting corrosion on lower base plate	No movement under live loads
~~Northwest~~ Exp.		- does not seem to have a pinned connection, despite curved upper rocker.
~~Southeast~~ Fix	Paint failure and corrosion no movement detected but cannot inspect bearing surface on lift pins are greased ~~some~~ some play in pins	moderate to heavy corrosion on bolts
~~Southwest~~ Fixed	~~fretting at pin~~ Anchor bolt washers are completely rusted out and can be removed	

~~pin~~ ~~SW~~ ~~Northwest~~ NE side is fretting east side is not
~~SW~~ ~~West~~ NE E side has slight fretting east does not } at pin

Memorial Bridge
North West Corner

N ↑

2	6	10	14
1	5	9	13

Performed Measurement of cycles w/ varying length

N=15

Rye		Distance from Casting top	times	
4	New	14"	9.31	9.50	9.40
1		14"	8.43	8.44	8.39
10		16"	8.54	8.59	8.56
16	New	13½"	9.40	9.34	9.37
15		17½"	8.10	8.10	8.12
9		16"	8.53	8.53	8.54

Distance from angle to top of casting:
S: 8", N: 7 3/4"

Memorial Bridge
Northeast corner

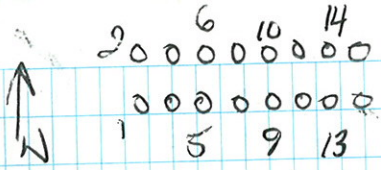

Rope	Distance	Time		
15	19 3/8"	8.41	8.50	8.47
9	17 1/4"	8.28	8.31	8.35
3	16 1/2"	8.60	8.63	8.54
2	17 1/2"	9.19	9.13	9.22
8	16 1/2"	8.62	8.69	8.69
4	18 1/2"	9.15	9.16	9.16

Distance from Casting to to steel top

South 8"
North 8 1/8"

Memorial Bridge
South west

N ↓

Rope	Distance	Time		
11	18 1/2"	8.31	8.34	8.49
5	18 1/4"	8.28	8.31	8.32
1	17 1/2"	8.19	8.18	8.16
4	18 3/4"	8.69	8.69	8.72
		~~8.58~~		
12	18	8.54	8.59	8.59
16	17 1/2"	9.41	9.37	9.44

Distance from top of Casting to top of steel

S - 8"
N - 7 7/8"

Memorial Bridge
Southeast

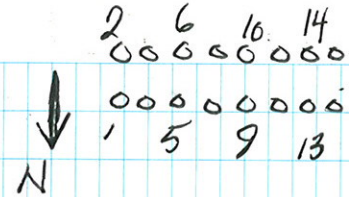

Rope	Distance	time		
1	18 1/2"	8.15	8.03	8.10
3	20 1/2"	8.66	8.81	8.85
11	18 3/4"	8.53	8.50	8.50
6	22 1/2"	8.66	8.53	8.57
10	15 1/2"	8.44	8.50	8.43
16	15 3/4"	8.63	8.62	8.66

Distance from top of easty to top of steel
N: 7 7/8"
S: 7 7/8"

ELECTRICAL STUDY

1 EXECUTIVE SUMMARY

The Sarah Mildred Long Bridge Main Movable Span Electrical facilities were inspected on June 2nd, 3rd and 4th of 2009. The electrical inspection team examined all the accessible components of the bridge electrical and control systems Most of the bridge electrical system was recently rehabilitated and are in good condition. Three levels of rehabilitation scope were considered, described as follows: (1) Minimum Rehabilitation which represents the minimum repair recommendations required to resolve the findings that affects the bridge reliability and general public and maintenance staff safety and should be resolved in a timely manner, (2) Moderate Rehabilitation which represents repair recommendations that will further increase the electrical and control system reliability, (3) Major Rehabilitation which represents repair recommendations that will make the bridge electrical and control systems very safe and reliable as per the current design standards. Recommendations for each level of rehabilitation are presented in Section 5.

2 DESCRIPTION OF SYSTEMS

This bridge is a tower drive vertical lift bridge with a double level movable span. The upper level carries US Route 1 Bypass highway and the lower level carries a railroad track going into the Portsmouth Naval Shipyard.

The bridge is manned 24/7 year round and is operated from the operator house located at the west side of the south tower. A gate tender is stationed on the north end of the bridge.

Each end of the bridge has its own utility power feeder, emergency power system and motor control center. The bridge is controlled using Programmable Logic Controller (PLC). There is one master PLC within the south side electrical room with a Remote Terminal Unit (RTU) in each machinery room and the north side electrical room. The communication between both ends of the bridge is done through redundant aerial fiber optic cables. A back up wireless communication link is set up between the towers.

The span operating machinery, drive motors, brakes and height transmitters are located in the tower machinery rooms. There are two ways to access the machinery rooms. The first is the most commonly used and requires riding the movable span, and then lifting the bridge until the movable span meets the top of the counter weight. Passengers then cross over to the top of the counter weight and ride the counterweight as the movable span is lowered to the seats. Access to the machinery room from the counter weight is through a hatch in the machinery room floor. The second method to access the machinery rooms is by climbing the ladder inside the tower legs. The ladder goes all the way from the top of the peer to the machinery room without rest platforms or cages. A safety harness is required to climb these ladders. A hoist is provided in one leg of each tower to move equipment.

There is a span lock for each end of the movable span. The span locks are located at the rest piers under the railroad track. The span locks are accessible via a set of stairs from the north approach sidewalk.

Warning and barrier gates are located on the approach spans at the upper roadway level. The gates provide a visual warning and physical barrier for the motorists when the movable span is not locked by the span locks or is not open to traffic.

Other ancillary systems such as navigation, access and egress lighting are located at various locations about the bridge and structures. All systems with few exceptions, operate reliably. The systems that were not included in the last rehabilitation appeared to be in poor condition. These systems are the span locks and the warning gates.

3 INSPECTION APPROACH AND METHODOLOGY

A visual inspection of the bridge electrical and control systems components was conducted. All the accessible cabinets and enclosures were opened and inspected. Tests consisting of insulation resistance and load current measurements were also conducted. Tests were performed to highlight areas that could be problematic towards the continued safe and reliable operation of the bridge as well as its effectiveness in supporting roadway, rail and marine traffic operations.

4 INSPECTION FINDINGS

4.1 Main Electric Service

There are two utility feeders supplying power to the bridge. The system voltage is 480/277V three phase.

4.1.1 North Approach:

The utility feeder is from the local utility at the Maine side of the bridge. This feeder enters the fenced generator area at the north end of the river, just below the approach span, which contains the outdoor mounted main disconnect switch. The main disconnect switch is a new switch that was installed in the last rehabilitation and appears to be in a good condition.

4.1.2 South Approach:

The utility feeder is from the local utility at the New Hampshire side of the bridge. This feeder enters the fenced generator area at the south end of the river in Port Authority facility just below the approach span. The fenced generator area contains the outdoor mounted main disconnect switch and the transient voltage surge suppressor (TVSS). The main disconnect switch and the TVSS were not included in the last rehabilitation and there is heavy corrosion present on the steel enclosures (See photo E-1). A minor or moderate rehabilitation scope should include the rehabilitation of the disconnect switch and TVSS enclosures. The enclosures should be cleaned and painted. A major rehabilitation scope includes the installation of a new main service disconnect switch and TVSS.

4.2 Back up Electric Service

Each utility feed is provided with a dedicated back up Electrical Diesel Generator. Since each generator feeds only one end of the bridge, it is possible to run the bridge using the utility feeder on one end and the back up Electrical Diesel Generator on the other end.

4.2.1 North Tower:

The generator and the ATS at the north approach are new equipment that have been installed in the last rehabilitation. The generator rating is 218KVA /175KW, 480/277V, 3 Phase, 60 cycles. The generator and the ATS appear to be in a good and reliable condition. The load side of the ATS is connected to the north tower MCC fusible disconnect switch which is located next to the ATS in the fenced generator area. This switch is also a new switch and appears to be in a good and reliable condition.

4.2.2 South Tower:

The generator and the ATS at the south approach are existing equipment that have not been included in the last rehabilitation. The generator is 187.5KVA /150KW, 480/277V, 3 Phase, 60 cycles. There is some corrosion showing on several parts of the generator housing. The generator was tested and appeared to be functioning as intended.

The ATS switch appears to be less than ten years old. The switch was tested and appeared to be functioning as intended however, the maintenance personnel mentioned that they have been experiencing some problem with the ATS and a technician came onsite and performed repairs. The electrical conduit system penetrating the top of the enclosure leaks water and there is some corrosion on the ATS main power and grounding lugs. This condition has the capability to quickly degrade the condition of the ATS. The conduit penetration into the ATS must be sealed as part of a minor or moderate rehabilitation scope. This repair will enhance the reliability of the emergency power system. As part of a major rehabilitation scope, a new ATS should be installed to assure that this critical component will be capable of performing its intended function under all appropriate scenarios.

4.3 Motor Control Centers (MCC)

4.3.1 North Tower:

The north tower MCC is located in a new electrical room on the east side of the north pier at track level, below the roadway. Access to the north tower electrical room is from stairs on the west side of the roadway, as well as the north approach if the retractible railroad span is closed. This MCC is fed from the north shore ATS thru a disconnect switch that is also located in the north shore generator area. The power and control cables are routed through conduits supported below the upper level of the approach span. For the most part, the conduits and supports appear to be new and in good condition. The MCC feeds the north traffic gates, the north span locks, north tower brakes, north motor drives and the north side control system transformer. This is a new MCC and it appeared in good condition. The electrical room also contains a Remote Terminal Unit (RTU) that interfaces with the MCC and span drives. The electrical room is well lit, and has provisions for heating and cooling. A sensor is installed on the door to signal the operator that the door is open.

4.3.2 South Tower:

The south tower MCC is located in the electrical room on the west side of the south pier just next to the control house. This MCC is fed from the south shore ATS thru a disconnect switch that is also located in the south shore generator area. The power and control wires are routed through conduits supported below the upper level of the approach span. The MCC feeds the south traffic gates, the south span locks, south tower brakes, south motor drives and the south side control system transformer. This is MCC appeared to be in good condition. The electrical room contains the span drives, is well lit and has provisions for heating and cooling.

4.4 Motors and Drives

The machinery room on each end of the bridge contain two 460V, 100 hp vector duty wound rotor type motors. Only one motor from each side is required to lift the span. The control system has an automatic alternator that alternates between the motors after every lift in order to maintain an equal wear on both motors. The operator has the capability to use any motor. These motors are controlled by the Allen-Bradley Powerflex 700 flux vector

drives that are located in the electrical rooms. The motors are connected directly to the load side of the drive. There is no safety disconnect switches within sight from the motors. The practice of not having disconnects within sight of the motors is in violation of NEC code and is a safety hazard. The only way to disconnect the power is from the electrical rooms located at the base of the towers. Since the most practical and commonly used method to get to the machine room is by riding the span, then maintenance personnel will have to rely on someone to disconnect and lock the power in the MCC rooms which violates the OSHA requirements as per standard 1910.147 section (c)(8) "**Energy isolation.** Lockout or tagout shall be performed only by the authorized employees who are performing the servicing or maintenance." In the case the maintenance personal decides to disconnect and lock the power by themselves, then they will have to climb approximately 160ft on a ladder in the tower leg using Personnel Protective Equipments (PPE) to get to the machinery room. This amount of effort is not a practical or safe way to provide local shut off for the motors. The scope of any rehabilitation approach should include the installation of safety disconnect switches for the motors in the machinery rooms.

All four motors were megger tested from the MCC room during the inspection and the insulation resistance values were as follow: 80 Megohm for the north tower east drive motor, 163 Megohm for the north tower west drive motor, 415 Megohm for the south tower west drive motor and 370 Megohm for the south tower east drive motor. All these values are acceptable and the motors and drives are operating as intended and they appeared to be in a good and reliable condition. The 80 Megohm reading on the north tower drive might be due to a lower insulation resistance in the cable feed from the MCC. Even though this value is acceptable it should be monitored and recorded regularly during the annual inspections.

4.5 Brakes

There are two thruster actuated machinery brakes and two solenoid motor brakes in each tower. The motor brakes are 460V, 3 phase solenoid brakes and are mounted to the back of the motors. These motor brakes are new and were installed in the latest rehabilitation. The machinery brakes are 460V, 3 phase thruster brakes and appeared to be in a good condition. Three lever arm limit switches are mounted on each brake for brake set, brake released and brake hand released indication. These limit switches were not replaced and some of them appeared to be at the end of their life and covered with grease (See photo E-2). In the same manner as the drive motors, the machinery brakes were connected directly to the MCC'S in the electrical rooms and there are no safety disconnect switch within sight of the brakes. All the brakes were megger tested and the insulation resistance was found to be 550 Megohm or higher for each thruster. These values are acceptable and the brakes appeared to be in good condition. The scope of any rehabilitation approach should include the installation of safety disconnect switches for the motors in the machinery rooms. A moderate or major rehabilitation scope shall include the replacement of the brake limit switches to ensure the reliability of the control system for the long term.

4.6 PLC System

The bridge is controlled using GE Fanuc PLC'S. The master PLC is located in the south side electrical room. Additional PLC's are mounted in the machinery rooms and the north tower electrical room. These PLCS act as RTU's to transmit/receive data from the master PLC. The tower PLC's receive input from redundant height transducers. The electrical and control room PLC's communicate with the MCC's, Span Drives and field limit switches.

The primary connection between the towers is done through fiber optic cables. A back up wireless communication link is set up between the towers. The PLC system was installed in the last rehabilitation and appeared to be in good condition. If changes were made to the bridge height and skew indication systems, modifications to the PLC Logic to Zero the height and skew indication is required prior to the lift cycle immediately before the span locks are pulled.

4.7 Aerial cables

No submarine cable is used between the towers. The only hard connection between the north and south towers is done through redundant fiber optic aerial cables. The cables provide the primary communication mean between the master PLC in the south tower electrical room and the remote PLC in the north machinery room and north electrical room. These cables were installed in the latest rehabilitation and appeared to be in good condition. A backup Ethernet radio system is available to provide communication in the case of a failure of the aerial cables.

4.8 Control Desk

The control desk is located in the control house. The desk is a combination of a touch screen and control switches and indicator lights. The desk has been installed in the latest rehabilitation and appeared to be in good and reliable condition.

4.9 Indication and Measuring Devices

4.9.1 Height and skew indication:

The bridge uses resolvers to compute the bridge height and skew. Two Hengstler type resolvers are used in each tower. The first resolver is driven directly from the main sheave trunion without any gear reduction. As the bridge moves, the trunion rotates and drives the resolver at the same speed. As the resolver rotates, it sends pulses to the PLC. The PLC counts the pulses to determine height and skew. Even though this height indication system appeared to be functioning properly, the mounting of the resolvers appeared not to be substantial, and subject to damage or misalignment (See photo E-3). The second resolver is set up into the control cabinet inside the machinery rooms. The resolver is driven by a piano wire on a spring loaded reel that runs through the machinery room floor and connects to the top of the counterweight. As the bridge is opening the piano wire is pulled and drives the resolver in one direction. When bridge is closing the piano wire retracts driving the resolver in the opposite direction. As the bridge is moving the resolver feeds the counterweight position and therefore the bridge position into the control system. The default settings uses the trunion mounted resolvers as the primary system for height and skew indication but the operator in the control room has the option to choose the feedback system he wants to use. The second skew indication system could be unreliable. The thin wire connected to the counterweight is almost invisible and since the counterweights are used to transfer the personnel into the machinery rooms, there is a high risk of the wire being damaged and cut during the process. The damage of the wire will leave the system with only one mean of measuring the height and skew. The system is not affected if the counterweight ropes slip on the sheaves, however, if the wind is blowing, one wire could be stretched more then the other which will provide an inaccurate position of the movable span. The scope of any rehabilitation approach shall include the elimination of the counterweight height indicator system and the installation of a new redundant system, identical to the system used on the main sheave trunion, on the other sheave in each

machinery room. Also included in any rehabilitation scope should be providing a more substantial support for the resolvers.

4.9.2 Span Seated Limit Switches:

The span is provided with one heavy duty, plunger operated, limit switch on each pier for the span seated indication. The switches are in serviceable condition.

From field experience the plunger switches are problematic. If they are not adjusted properly, they can be easily damaged.

Proximity switches are a more reliable design since they don't have to make contact to perform their required task. The scope of a major rehabilitation approach should include the replacement of the plunger switches by proximity sensors to enhance the reliability of the control system.

4.10 Traffic Gates

4.10.1 Warning Gates:

A combination of warning gates and traffic lights is used at each approach. Both warning gates are in a very poor condition. The housing is corroded. The cables extended to power the flashing lights and some of the flashing lights on the gates arms are held in place using duct tape. The arm of the south approach warning gate is broken and nailed pieces of wood are currently used to hold it in place. The rotary cam switches that are located inside the housing and used to provide an indication about the gate position are open and not protected with a redundant cover. The switches are delicate and this is an original equipment manufacturer condition. A cover is necessary to protect the switch and enhance its reliability. In addition the cams of the switches are showing some moderate corrosion (See photo E-4, E-5 and E-6). As part of a minimum rehabilitation scope, covers should be provided to protect the existing switches. As part of a moderate rehabilitation scope NEMA 4X commercial switches shall be retrofitted to replace the existing switches. Both moderate and minor rehabilitation approaches shall include the cleaning and painting of the gates housing and the replacement of the gates arms. A major rehabilitation scope shall include the installation of new warning gates to ensure reliability and safety for the long term.

4.10.2 Barrier Gates:

The barrier gates are used to provide a physical barrier for the traffic when the bridge is moving. One barrier gate is located at each end of the bridge. Special provisions have been made to heat the arm receivers to minimize iceing. The gate housings are showing some moderate corrosion. A gong is installed on each gate to provide an audible warning that gate is moving. The gong on the north approach gate is not operational. Any rehabilitation approach should include the installation of a new gong on the north approach barrier gate and the cleaning and painting of the barrier gates enclosures.

4.11 Span Locks

Span locks are installed at the rest piers on either end of the movable span to ensure that the movable span is fully seated and locked in place when the span is in the closed position. The location of the span locks are difficult to access and pose a challenge for the maintenance crew. The close proximity of the span lock to the water has accelerated the corrosion process. The span locks are severely corroded and several conduit supports and fittings have deteriorated and need to be replaced (See photo E-7). Broken conduits expose

the conductors to moisture which accelerates insulation breakdown and may lead to short circuits. The span locks were megger tested and the insulation resistance was found to be 550 Megohm for both thrusters. This value is acceptable and the span locks appeared to be operating as intended. The built in limit switches inside the actuator are used to provide the indication about the position of the thruster. The scope of any rehabilitation approach shall include the installation of new span locks and limit switches. The new span locks shall be located in a location further away from the water (see mechanical section 4.2 for additional details).

4.12 Navigation Lights

Navigation lights are installed on the piers and on either end of the movable span to provide visual guidance for the marine traffic. The southwest pier navigation light conduits support system has deteriorated and conduit has broken loose and needs to be secured in place (See photo E-8). The scope of a minor or moderate rehabilitation approach shall include the installation of new clamps and securing the conduits in place. The scope of a major rehabilitation approach shall include the installation of a new wiring system to ensure the long reliability of the navigation lighting system.

4.13 Miscellaneous

The motor leads termination cabinet next to the abandoned north tower submarine cable termination cabinet on the east side of the railroad track has several conduit penetrations that were not used and are left open. If left open these openings will admit moisture, humidity and vermin into the conduit system and might lead to early failure and will reduce the service life of the electrical system components. The scope of any rehabilitation should include the closure and sealing of these openings to enhance the reliability of the wiring system.

The lower traffic light at the south approach is not operational. Traffic lights are required to stop the traffic when the gates are down. The scope of any rehabilitation approach shall include the replacement of the defective traffic light.

It was noted that several maintenance lights in the south tower machinery room are burned out. Efficient lighting is essential to minimize the time required in case of an emergency troubleshooting or repair efforts. Also the legend of the lighting panel STL in the south tower machine room does not match the breakers configurations. If left unchanged, this will create some confusion to the maintenance crew and might delay the response time required to troubleshoot a problem in the system.

5 RECOMMENDATIONS

5.1 Minimum Rehabilitation:

1. Main electric service
    a. Clean and paint enclosures for the south approach main service disconnect switch and TVSS.
2. Back up electric service
    a. Seal conduit penetrations into the south approach ATS to prevent water from leaking into the enclosure.
3. Motor control centers

   a. No changes.
4. Motors and drives
   a. Install safety disconnect switches for the motors in the machinery rooms.
5. Brakes
   a. Install safety disconnect switches for the machinery and motor brakes in the machinery rooms.
6. PLC system
   a. Modify the PLC logic to zero the height and skew indication counter prior to lift cycle immediately before the span locks are pulled.
7. Aerial cables
   a. No change.
8. Control desk
   a. No change.
9. Indication and measuring devices
   a. Replicate the height indication system used on the main sheave trunion on the other sheave in the machinery rooms and eliminate the counterweight system height indicator.
   b. Provide more substantial supports for resolvers
10. Traffic gates
   a. Clean and paint housing of the warning and barrier gates.
   b. Provide covers for the rotary cam switches inside the warning and barrier gates.
   c. Provide new arms for the warning gates
   d. Replace the gong on the north approach barrier gate.
11. Span locks
   a. Install new span locks systems including new limit switches and wiring systems.
12. Navigation lights
   a. Install new clamps and secure the conduit of the southwest navigation light in place.
13. Miscellaneous
   a. Close and seal openings in the motor leads termination cabinet located on the north pier next to the railroad track.
   b. Fix the defective lower traffic light at the south approach

5.2 Moderate Rehabilitation:

1. Main electric service
   a. Clean and paint enclosures for the south approach main service disconnect switch and TVSS.
2. Back up electric service
   a. Seal conduit penetrations into the south approach ATS to prevent water from leaking into the enclosure.
3. Motor control centers

   a. No changes.
4. Motors and drives
   a. Install safety disconnect switches for the motors in the machinery rooms.
5. Brakes
   a. Install safety disconnect switches for the machinery and motor brakes in the machinery rooms.
   b. Replace the machinery brake limit switches.
6. PLC system
   a. Modify the PLC logic to zero the height and skew indication counter prior to lift cycle immediately before the span locks are pulled.
7. Aerial cables
   a. No change.
8. Control desk
   a. No change.
9. Indication and measuring devices
   a. Replicate the height indication system used on the main sheave trunion on the other sheave in the machinery rooms and eliminate the counterweight system height indicator.
   b. Replace existing span seated plunger switches with proximity sensors.
10. Traffic gates
    a. Clean and paint housing of the warning and barrier gates.
    b. Replace the rotary cam switches inside the warning and barrier gates.
    c. Provide new arms for the warning gates.
    d. Replace the gong on the north approach barrier gate.
11. Span locks
    a. Install new span locks systems including new limit switches and wiring systems.
12. Navigation lights
    a. Install new clamps and secure the conduit of the southwest navigation light in place.
13. Miscellaneous
    a. Close and seal openings in the motor leads termination cabinet located on the north pier next to the railroad track.
    b. Fix the un-operational lower traffic light at the south approach

5.3 Major Rehabilitation:

1. Main electric service
   a. Install new main service disconnect switch and TVSS for the south approach main electric service.
2. Back up electric service
   a. Replace the south approach ATS.
3. Motor control centers
   a. No changes.

4. Motors and drives
    a. Install safety disconnect switches for the motors in the machinery rooms.
5. Brakes
    a. Install safety disconnect switches for the machinery and motor brakes in the machinery rooms.
    b. Replace the machinery brakes limit switches.
6. PLC system
    a. Modify the PLC logic to zero the height and skew indication counter prior to lift cycle immediately before the span locks are pulled.
7. Aerial cables
    a. No change.
8. Control desk
    a. No change.
9. Indication and measuring devices
    a. Replicate the height indication system used on the main sheave trunion on the other sheave in the machinery rooms and eliminate the counterweight system height indicator.
    b. Replace existing span seated plunger switches with proximity sensors.
10. Traffic gates
    a. Clean and paint housing of the barrier gates.
    b. Replace the gong on the north approach barrier gate
    c. Replace the rotary cam switches inside barrier gates.
    d. Install new warning gates.
11. Span locks
    a. Install new span locks systems including new limit switches and wiring systems.
12. Navigation lights
    a. Install new conduits and wiring for all the pier navigation lights.
13. Miscellaneous
    a. Close and seal openings in the motor leads termination cabinet located on the north pier next to the railroad track.
    b. Fix the un-operational lower traffic light at the south approach

Appendix A

Photos

Photo E-1: Heavy corrosion present at the main service disconnect switch at the south shore

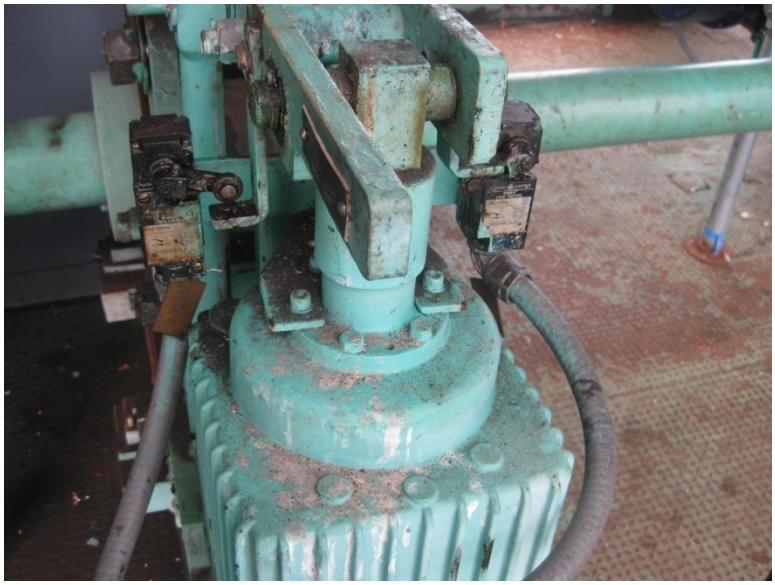

Photo E-2: The brakes limit switches appeared to be at the end of their life and covered with grease

Photo E-3: The mounting of the height indication resolvers is not a substantial design and is subject to damage or misalignment

Photo E-4: The housing of the warning gates is very corroded

Photo E-5: The arms of the south approach warning gate is broken and the wiring is held in place using duct tape

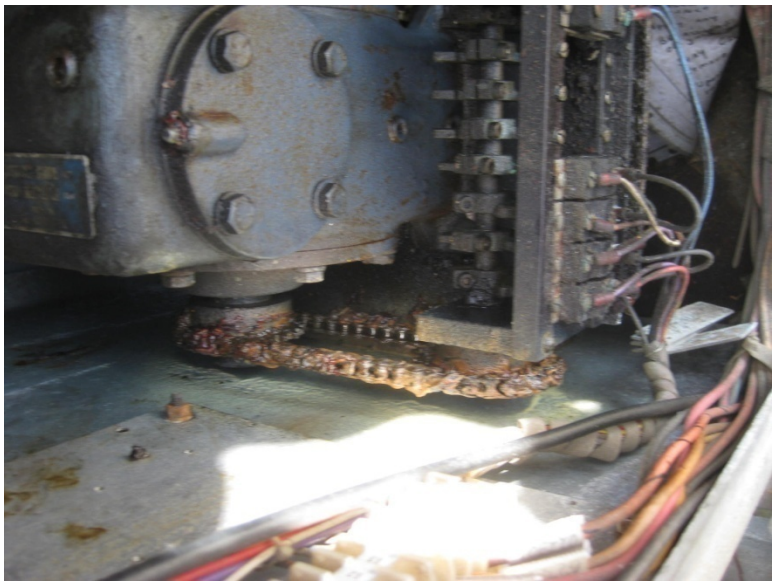

Photo E-6: The rotary cam switches that are located inside the housing of the traffic gate and used to provide an indication about the gate position are open and not protected with any cover

Photo E-7: The span locks conduit supports and fittings have deteriorated and need to be replaced

Photo E-8: The Navigation lights conduit supports and fittings have deteriorated and need to be replaced

Photo E-9: The motor leads termination cabinet next to the north tower abandoned submarine cabinet on the east side of the railroad track has few conduit penetrations that are left open and will admit moisture, humidity and vermin into the conduit system if not sealed

Appendix B

Field Inspection Sheets

Start @ 45A all phases. 65AED Then work its way down TO 30A By 15AED 75' elev. counterweight meet the span

No Amps / span Heavy

NH DOT Sara Long Bridge Inspection

Motor Current					
		North			South
	Raise	Lower		Raise	Lower
West Drive	30/45			~~15-65~~	
East Drive	15 - 65				
West MachineryBrake	1.6 A	—		1.58	—
East Machinery Brake	.61 A	—		1.48	—
West Motor Brake	1.6 A	—		0.43	—
East Motor Brake	.58 A	—		0.47	—
	Pull	Drive		Pull	Drive
Span Lock	1.18	1.26		1.1	1.7
	Raise	Lower		Raise	Lower
Warning (Traffic)Gate	0.57	0.57		0.6	0.59
Barrier Gate	1.3 A	1.2 A		1.7	1.2

~~Start 50A Pull lift near close~~ V

South Outboard traffic
South Inboard traffic

06/07/09

Sunny. 76°F, 47% Humidity

south east drive - Raise 50A start → 5A near full open.
full lift
Lower 30A start → 0A @ approx 60 ft → 0A full close (Breaking Rendes forms)

southwest drive Raise 50A start → 0A near full open (Breaking Rendes forms)
full lift
Lower 30A start — 0A @ approx 60f → 0A full close
Breaking Rendes forms

NH DOT Sara Long Bridge Inspection

Megger Readings 500 V (525Actual)

		North			South	
West Drive		163 MΩ			~~300~~	415 MΩ
East Drive		80 MΩ.			370	MΩ
West MachineryBrake		550 Meg Ω			550	MΩ
East Machinery Brake		550 Meg Ω			550	MΩ
West Motor Brake		550 Meg Ω			550	MΩ
East Motor Brake		550 Meg Ω			550	MΩ
Span Lock		550 Meg Ω			550	MΩ
Warning (Traffic)Gate		~~550 MΩ~~ 12.3 Meg Ω			550Ω	South outboard traffic Gate
Barrier Gate		.5 Meg Ω			550Ω	South inboard traffic Gate

Re Megger
6/08/09
550 MΩ.

6/4/09
68°
31% humidity
Sunny

Tuesday 6/8/09

* North Tower Megger Test North Barrier gate.
(gate Megger tested OK 550 MΩ)
* Aircraft Beacon sensor.
North Tower
- East Motor Drive
(Megger tested 71 MΩ, 80 MΩ

- West Motor Drive.
(megger tested 163 MΩ).

* traffic gate North approach re-meggered 550 MΩ.

* plunger switch North side for span reader
(looked OK, little rusted)

Wed 6/03/09.

* @ 12 pm, simulate outage on Both ends of the Bridge and run the span on emergency ~~system~~ generator.

KH & JM located at the south end generator area to watch operation.

south end is the older ~~sys~~ system & and problem might occur as per maintenance personnel.
Trial was unsuccessful operator was not familiar with procedure
* KH & JM Moved To operator House To the support & witness the

* 1st trial to lift the Bridge on energency generator @ 19:30 pm was unsuccessful. Both utility disc were shut down, generator started. operator was unable to lift the span. (was not familiar with the procedure.

* 2nd trial to lift the Bridge on utility to get people in the Tower @ 1:00 pm. The span was lifted with south on utility and north end on generator @ 800 RPM. Tripped on overtorque

* 3rd trial to lift Both ends utility disc switch opened. lift was successful. Motors switched to 400 RPM. operator Had to select the motors (Northwest & Southwest). Not familiar with the procedure.
North end generator needs 31 min after utility power is Back on to switch to utility.
@ 35 min cooldown cycle done and North generator shut down.

* southend generator switch to utility after 15 min and was shut off after 25 min.

United automation, system integrator for Sarah Long.
Dylan Kimmel. phone 603-431-9999
senior controls engineer. cell # 603-969-6749.
210 west Road.
portsmouth NH.

* Status was still supplying load till 15 min.

* RPM was stuck @ 0 on the screen.

* called the tech. (Fault due power loss to the drive) eventhough drive was disconnected to Megger the motor).
* tech helped operator to clear the fault and reselect the 800 RPM. speed can be selected.

* the speed was defaulted to 400 RPM when south & North generator were ON.

* North side gong on Barrier gate not operational (No sound)

* West side Nav light on retractable span is not working (green is off).

* south MCC Room

* AC OK.
* Heater OK.
* 2 Burnt out light fixtures.

* Maintenance personnel mentioned that they have been experiencing problems with south approach ATS

HDR | ONE COMPANY *Many Solutions*™

Project: SARAH LOCK		Computed:	Date:
Subject: INSPECTION GUIDELINE		Checked:	Date:
Task:		Page:	of:
Job #:		No:	

SOUTH

WELDING SONICS
OK, Rusted main disconnect

ATS / GENSET.
(used to experience problems with ATS locked, pinned on)
AERCRAFT BOTTON
OFF
(one photo cell & No lamport relay).

DRIVE UNIT.
A east ✓ New
B West ✓ New

MOTORS
A New ✓
B New ✓

CONTROL SYSTEM. OK.

FIELD DEVICES

SPAN SOURCE LS. (plunger switch
RCLS. Inside clean, outside rusty broken seal tight) same as south
FULL OPEN LS (prox switch inside the tower, activates counterweight alarm)
OVER TRAVEL LS (Not found, Counterweight sits on the road @ full open).

NORTH

OK.

HDR | ONE COMPANY *Many Solutions*℠

Project:	Computed:	Date:
Subject:	Checked:	Date:
Task:	Page:	of:
Job #:	No:	

HEIGHT / SLOW INDICATION OK OK

1 of the Trunion.
1 of the wire on the Tower.

HDR | ONE COMPANY *Many Solutions*™

Project:	Computed:	Date:
Subject:	Checked:	Date:
Task:	Page:	of:
Job #:	No:	

	SOUTH	NORTH
BRAKES		
A motor	on	X
machine	on	X
B motor	on	X
machine	on.	X
MOTOR ENCODERS		
A	on	X
B	on.	Y
TRUNNION ENCODER	on.	X – DON'T USE

SPAN LOCK — old & rusted. Broken conduit, & real light.

GATES WARNING — Broken arm. Rusted. Duct taped wiring.

BARRIER — Rusted, Messy wiring.

HDR | ONE COMPANY *Many Solutions*™

Project:		Computed:	Date:
Subject:		Checked:	Date:
Task:		Page:	of:
Job #:		No:	

	CR	North MCC	South MCC
Heating		X	OK
Cooling		X	OK.
Ventilation		—	
Communication			
Radio		✓	
Telephone		✓	

HDR | ONE COMPANY Many Solutions℠

Project:	Computed:	Date:
Subject:	Checked:	Date:
Task:	Page:	of:
Job #:	No:	

Nameplate data - South Tower

Steams - ~~West~~ East Rev A Serial #1
Mode # 108204202204 39598H001-3
Torque 16 ft
mounting
330 Horizontal
Volts
230/480 Amps Inrush
~~190/380~~ 22.1/11.1
Hz Amps Holding
A68 3781059 60 8/.4

Brake - East
Mondel Engineering Ltd
No: 23348
Size: 19MBT/E-ED121/6A0
Supply: 460/3/60Hz
Opt Amps 1.2
Rating mins: CON Torque 2000 lbf ft

Brake - West
No: 24732
Size: 19MBT/E/ED121/6A0
motor west - Picture taken
West
Serial # 39598H001-4

‘

Appendix A
Inspection Forms

Bridge Inspection Report

Portsmouth 251/108

Date of Inspection: 10/10/2009
Date Report Sent: 10/11/2009
☑ Picture taken during inspection
Owner: Interstate Bridge Auth.
Bridge also in: Kittery , Maine

US 1 BYPASS
Over
PISCATAQUA RIVER & RR
Sarah M. Long Bridge

Recommended Postings:

Weight: 'Weight Limit 20 Tons' ☑ Weight Sign OK

Width: Not Required ☑ Width Sign OK

Primary Height Sign Recommendation: **14`-01"**
Optional Centerline Height Sign Rec: *None*
13'-11" AT N.E. - B/Y. 16'-5" AT N.W. - B/Y

Clearances: (Feet) Over: 16.08 Under: 16.70 Route: 16.08

☑ Height Signs OK

Condition: State Redlist
Deck: 4 Poor
Superstructure: 3 Serious
Substructure: 3 Serious
Culvert: N N/A (NBI)

Structure Type and Materials:
Number of Spans Main Unit: 5
Number of Approach Spans: 22

Main Span Material and Design Type
Steel Movable - Lift

Approach Span Material and Design Type
Steel Girder and Floorbeam

Sufficiency Rating: 12.8%
NBI Status: Structurally Deficient

Bridge Rail: Substandard
Rail Transition: Substandard
Bridge Approach Rail: Meets Standards
Approach Rail Ends: Substandard

NH Bridge Type: Vertical Lift
Deck Type: Concrete, Cast in Place
Wearing Surface: Monolithic Concrete
Membrane: None
Deck Protection: None
Pavement thickness: Not Applicable
Curb Reveal: 8.0 in
Plan Location: 2-14-1-1

Bridge Dimensions:

Length Maximum Span: 227.0 ft
Left Curb/Sidewalk Width: 2.5 ft
Width Curb to Curb: 30.0 ft
Approach Roadway Width (W/ Shoulders): 32.0 ft

Total Bridge Length: 2,804.0 ft
Right Curb/Sidewalk Width: 2.5 ft
Total Bridge Width: 36.0 ft
Median: No median
Bridge Skew: 0.00 °

Bridge Service:

Type of Service on Bridge: Highway and Railroad
Type of Service under: Hwy-waterway-RR
Lanes on bridge: 2
Lanes Under: 4

Year Built: 1940
Year Rebuilt: 1991
Detour Length: 8.0 mi

AADT: 14000 Percent Trucks: 5% Year of AADT: 2004
Future AADT: 20720 Year of Future AADT: 2028

Federal or State Definition Bridge:	Fed. Definition Bridge
Roadway Functional Class:	Urban Expressway
New Hampshire Highway System and Class:	Turnpike, not Primary
Eligibility for the National Register of Historic Places:	Eligible (Historic)
Traffic Direction:	Two-way traffic

National Bridge Inventory (NBI) Appraisal Ratings:

Deck Geometry:	Minimum Tolerable
Underclearances:	Above Min. Tolerable
Approach Alignment:	Equal Desirable Criteria
Structural Evaluation:	Intolerable, Correctable
Channel/Channel Protection:	Minor Damage
Waterway Adequacy:	Above Desirable Criteria
Bridge Scour Critical Status:	Stable for extreme flood
Riprap Condition:	Good Condition
Debris Present:	No Debris Present
Date of Underwater Inspection:	Sep. 2008

AASHTO CoRe Element Condition State Data:

No.	Description	Env.	Material Notes and Condition Notes
22	Concrete Deck - Protected with Rigid Overlay	Severe	*TOP OF DECK - FINE CRACKS MINOR SPALLS . PATCHED AREAS. DEPRESSED AREAS.*
107	Painted Steel Beam or Girder (Open Web)	Severe	*HEAVILY RUSTED WITH SECTION LOSS AT JOINTS. WEST GIRDER HOLED AT PIER # 3 IN TWO AREAS.*
113	Painted Steel Stringer	Severe	*FEW HOLES IN EXTERIORS. OTHERS RUSTED WITH SECTION LOSS. PLATED AREAS.*
121	Painted Steel Bottom Chord (Thru Truss)	Severe	*RUSTED WITH SECTION LOSS. BRACING HOLED.*
152	Painted Steel Floor Beam	Severe	*HEAVILY RUSTED AT JOINTS WITH SECTION LOSS.*
202	Painted Steel Column or Pile Extension	Severe	*RUSTED WITH SECTION LOSS.*
205	Reinforced Concrete Column or Pile Extension	Severe	*CRACKS, SPALLS, REBAR EXPOSED.*

Bridge Inspection Report

Portsmouth 251/108

No.	Description	Env.	Material Notes and Condition Notes
210	Reinforced Concrete Pier Wall	Severe	*CRACKS, SPALLS, REBAR EXPOSED. DELAMINATIONS.*
215	Reinforced Concrete Abutment	Severe	*LIGHT CRACKS AND SPALLS. MEDIUM SPALL AT SOUTH EAST.*
302	Compression Joint Seal	Severe	*SOME REPAIR WORK COMPLETED. DAMAGED AND LEAKING. TIGHT.*
303	Modular Joint and Seal Assembly	Severe	*TRANSFLEX GLANDS INSTALLED. DAMAGED AND LEAKING.*
310	Elastomeric Bearing	Severe	*SOME DEFORMED.*
311	Moveable Bearing (roller, sliding, etc.)	Severe	*RUSTED WITH SECTION LOSS.*
334	Coated Metal Bridge Railing	Moderate	*** Steel Pipe Rail *** *SERIOUS CONDITION. HEAVILY RUSTED WITH SECTION LOSS. SEVERAL HOLED AREAS.*
357	Pack Rust Condition Warning Flag	Severe	*PACK RUST AT ANGLES AND PLATES.*
358	Deck Cracking Condition Warning Flag	Severe	*HEAVILY SPALLED.*
359	Soffit of Conc Deck or Slab Condition Warning Flag	Severe	*LARGE SPALLS AND REBAR EXPOSED. HEAVY LEAKING.*
363	Section Loss Condition Warning Flag	Severe	*HOLED AREAS.*

No.	Description	Env.	Quantity	Units	State 1	State 2	State 3	State 4	State 5
22	Concrete Deck - Protected with Rigid O	Severe	100,933	(SF)	0 %	0 %	100 %	0 %	0 %
107	Painted Steel Beam or Girder (Open We	Severe	16,824	(LF)	0 %	20 %	60 %	20 %	0 %
113	Painted Steel Stringer	Severe	16,824	(LF)	0 %	70 %	15 %	5 %	10 %
121	Painted Steel Bottom Chord (Thru Truss	Severe	5,607	(LF)	0 %	80 %	5 %	15 %	0 %
152	Painted Steel Floor Beam	Severe	2,917	(LF)	0 %	85 %	10 %	5 %	0 %
202	Painted Steel Column or Pile Extension	Severe	14	(EA)	0 %	80 %	10 %	10 %	0 %
205	Reinforced Concrete Column or Pile Ext	Severe	22	(EA)	0 %	70 %	30 %	0 %	
210	Reinforced Concrete Pier Wall	Severe	361	(LF)	0 %	90 %	10 %	0 %	
215	Reinforced Concrete Abutment	Severe	230	(LF)	0 %	50 %	50 %	0 %	

Bridge Inspection Report

Portsmouth 251/108

No.	Description	Env.	Quantity	Units	State 1	State 2	State 3	State 4	State 5
302	Compression Joint Seal	Severe	685	(LF)	70 %	20 %	10 %		
303	Modular Joint and Seal Assembly	Severe	289	(LF)	50 %	50 %	0 %		
310	Elastomeric Bearing	Severe	4	(EA)	90 %	10 %	0 %		
311	Moveable Bearing (roller, sliding, etc.)	Severe	56	(EA)	0 %	50 %	50 %		
334	Coated Metal Bridge Railing	Moderate	5,801	(LF)	0 %	0 %	0 %	75 %	25 %
357	Pack Rust Condition Warning Flag	Severe	1	(EA)	0 %	0 %	100 %	0 %	
358	Deck Cracking Condition Warning Flag	Severe	1	(EA)	0 %	100 %	0 %	0 %	
359	Soffit of Conc Deck or Slab Condition W	Severe	1	(EA)	0 %	0 %	0 %	100 %	0 %
363	Section Loss Condition Warning Flag	Severe	1	(EA)	0 %	100 %	0 %	0 %	

Bridge Notes:
Sarah Mildred Long Bridge (1987, Chapter 51:1)
ADDED TO STATE RED LIST 11/03.
LIFT INSPECTION 11/6/03; 7/15/05. 5/1/06 - 5/4/06 - 5/5/06, 8/7/07, 5/27-29/08
CWIP 11/3/08.

INSPECTION FOR RR SPAN AT TOWERS ONLY 7/16/09.
May and June 2009 HDR in-depth inspection for BICA contract.

Approach and Roadway Notes: *STEEL POST RAIL AND CHANNEL RUSTED AND HOLED. POOR CONDITION. MINOR DAMAGE. NEW W- BEAM TRASITION AT NORTHEAST. ASPHALT- CRACKS AND SETTLED. LARGE DEPRESSED AREA AT NORTH- REPAVED.*

Inspection History:

Inspection Date: 10/10/2009 **Inspector:** DEP

Notes:
See HDR Report, inspection field work May and June, 2009. Inspection date set to intertwine with C-Team inspections.

Deck: 4 Poor
Super: 3 Serious
Substr: 3 Serious
Culvert: N N/A (NBI)

Inspection History:

Inspection Date: 07/16/2009 **Inspector:** DPC

Deck: 4 Poor
Super: 3 Serious
Substr: 3 Serious
Culvert: N N/A (NBI)

Notes:

DPC - inspection comments-
CONCRETE DECK- ELEMENTS IN POOR CONDITION. LIGHT CRACKS AND MODERATE SPALLS IN AREAS WITH REBAR EXPOSED AND RUSTING, UNDERSIDE. HEAVY LEAKING. TOP OF DECK- FINE CRACKS MINOR SPALLS. PATCHED AREAS. DEPRESSED AREAS. MANY EXPANSION JOINTS REPAIRED.
SUPERSTRUCTURE- ELEMENTS IN SERIOUS CONDITION. BRIDGE HAS HEAVY SECTION LOSS AND HOLED AREAS. HEAVY PACK RUST.
SUBSTRUCTURE- ELEMENTS IN SERIOUS (CHANGED FROM FAIR DURING HDR JUNE INSPECTION) CONDITION. CONCRETE PIER CAP AND COLUMN REPAIRS IN PROGRESS. SOME LARGE CRACKS AND SPALLS.
LIFT MOTOR AT SOUTH VIBRATING BRIDGE AT 7' HEIGHT TO 15' HEIGHT 11/28/07. BUILDING VIBRATING. HEAVY DETERIORATION OF LIFT BUILDING AT BOTTOM. SEVERAL TIMBERS ON RR SPAN HAVE HEAVY DECAY AND ARE CRUSHING. STEEL RR TRACK LIFTING 2" AT NORTH WEST LIFT SPAN. NOISE AT SOUTH EAST WHEEL FOR LIFT CABLES.

PICTURES: C392.
8: SMALL LIFT RR SPAN CWIP.
9: NEW ELECTRIC UNIT AT NORTH EAST LIFT PIER.
10:PIER 2 SPALLED AT SOUTH EAST.

PICTURES: C399
#10: SOUTH TOWER EAST GIRDER UNDER RR SPAN TOP FLANGE HOLED AT SOUTH FLOOR BEAM,HEAVY RUSTING AND SECTION LOSS.
#11: CONNECTION PLATE HOLED AT SOUTH EAST GIRDER AT RR SPAN AT TOWER.
#12: SEVERAL RIVETS HAVE 100% SECTION LOSS AT RR SPAN SOUTH TOWER.
#13: CRIBBING UNDER SOUTH TOWER GIRDER. GIRDER IS 10 FEET LONG, FLANGES ARE 10 INCH BY 3/4 INCH. WEB IS 2 FEET HIGH.
#14: NORTH TOWER RR SPAN GIRDERS HAVE NO HOLES. HEAVY RUSTING AND SECTION LOSS.
#15: CRIBBING UNDER NORTH TOWER.

Inspection Date: 07/10/2009 **Inspector:** NBG

Deck: 4 Poor
Super: 3 Serious
Substr: 3 Serious
Culvert: N N/A (NBI)

Notes:

Inspection Event to change recommended posting to 'Weight Limit 20 Tons'.

Inspection History:

Inspection Date: 03/25/2009 **Inspector:** DPC

Deck: 4 Poor
Super: 3 Serious
Substr: 5 Fair
Culvert: N N/A (NBI)

Notes:

DPC - inspection comments-
CONCRETE DECK- ELEMENTS IN POOR CONDITION. LIGHT CRACKS AND MODERATE SPALLS IN AREAS WITH REBAR EXPOSED AND RUSTING, UNDERSIDE. HEAVY LEAKING. TOP OF DECK- FINE CRACKS MINOR SPALLS. PATCHED AREAS. DEPRESSED AREAS. MANY EXPANSION JOINTS REPAIRED.
SUPERSTRUCTURE- ELEMENTS IN SERIOUS CONDITION. BRIDGE HAS HEAVY SECTION LOSS AND HOLED AREAS. HEAVY PACK RUST.
SUBSTRUCTURE- ELEMENTS IN FAIR CONDITION. CONCRETE PIER CAP AND COLUMN REPAIRS IN PROGRESS. SOME LARGE CRACKS AND SPALLS.
LIFT MOTOR AT SOUTH VIBRATING BRIDGE AT 7' HEIGHT TO 15' HEIGHT 11/28/07. BUILDING VIBRATING. HEAVY DETERIORATION OF LIFT BUILDING AT BOTTOM. SEVERAL TIMBERS ON RR SPAN HAVE HEAVY DECAY AND ARE CRUSHING. STEEL RR TRACK LIFTING 2" AT NORTH WEST LIFT SPAN. NOISE AT SOUTH EAST WHEEL FOR LIFT CABLES.

PICTURES: C392.
8: SMALL LIFT RR SPAN CWIP.
9: NEW ELECTRIC UNIT AT NORTH EAST LIFT PIER.
10:PIER 2 SPALLED AT SOUTH EAST.

Inspection Date: 11/26/2008 **Inspector:** KJT

Deck: 4 Poor
Super: 3 Serious
Substr: 5 Fair
Culvert: N N/A (NBI)

Notes:

DPC - inspection comments-
CONCRETE DECK- ELEMENTS IN POOR CONDITION. LIGHT CRACKS AND MODERATE SPALLS IN AREAS WITH REBAR EXPOSED AND RUSTING, UNDERSIDE. HEAVY LEAKING. TOP OF DECK- FINE CRACKS MINOR SPALLS. PATCHED AREAS. MANY EXPANSION JOINTS REPAIRED.
SUPERSTRUCTURE- ELEMENTS IN SERIOUS CONDITION. BRIDGE HAS HEAVY SECTION LOSS AND HOLED AREAS. HEAVY PACK RUST.
SUBSTRUCTURE- ELEMENTS IN FAIR CONDITION. CONCRETE PIER CAP AND COLUMN REPAIRS IN PROGRESS. SOME LARGE CRACKS AND SPALLS.
LIFT MOTOR AT SOUTH VIBRATING BRIDGE AT 7' HEIGHT TO 15' HEIGHT 11/28/07. BUILDING VIBRATING. HEAVY DETERIORATION OF LIFT BUILDING AT BOTTOM. SEVERAL TIMBERS ON RR SPAN HAVE HEAVY DECAY AND ARE CRUSHING. STEEL RR TRACK LIFTING 2" AT NORTH WEST LIFT SPAN.

PICTURES: C386.
5. NEW MOTORS BOTH TOWERS.
6. NEW COUNTER INSTALLED ON CABLE WHEEL.
7. CWIP CABLE WHEELS BOTH TOWERS AT EAST.
8. NEW POWER CABLES.

Inspection History:

Inspection Date: 11/03/2008 **Inspector:** DPC

Deck: 4 Poor
Super: 3 Serious
Substr: 5 Fair
Culvert: N N/A (NBI)

Notes:

DPC - inspection comments-
CONCRETE DECK- ELEMENTS IN POOR CONDITION. LIGHT CRACKS AND MODERATE SPALLS IN AREAS WITH REBAR EXPOSED AND RUSTING, UNDERSIDE. HEAVY LEAKING. TOP OF DECK- FINE CRACKS MINOR SPALLS. PATCHED AREAS. MANY EXPANSION JOINTS REPAIRED.
SUPERSTRUCTURE- ELEMENTS IN SERIOUS CONDITION. BRIDGE HAS HEAVY SECTION LOSS AND HOLED AREAS. HEAVY PACK RUST.
SUBSTRUCTURE- ELEMENTS IN FAIR CONDITION. CONCRETE PIER CAP AND COLUMN REPAIRS IN PROGRESS. SOME LARGE CRACKS AND SPALLS.
LIFT MOTOR AT SOUTH VIBRATING BRIDGE AT 7' HEIGHT TO 15' HEIGHT 11/28/07. BUILDING VIBRATING. HEAVY DETERIORATION OF LIFT BUILDING AT BOTTOM. SEVERAL TIMBERS ON RR SPAN HAVE HEAVY DECAY AND ARE CRUSHING. STEEL RR TRACK LIFTING 2" AT NORTH WEST LIFT SPAN.

PICTURES: C383
23: CWIP.

Inspection Date: 09/11/2008 **Inspector:** DMB

Deck: 4 Poor
Super: 3 Serious
Substr: 7 Good
Culvert: N N/A (NBI)

Notes:

DMB inspection comments- UNDERWATER INSPECTION OF PIER ELEMENTS ONLY. PIERS AND FOOTINGS IN GOOD CONDITION. ISOLATED AREAS ALONG THE TOP OF THE CONCRETE FOOTINGS EXHIBIT SOFT/BRITTLE SCALED CONCRETE. LEAD CAULKED MASONRY JOINTS IN GOOD CONDITION. OLD STEEL COFFERDAM MATERIAL HAS SEVERE CORROSION & SEVERE SECTION LOSS, BUT ARE NON-STRUCTURAL. MINOR SCOUR AT THE NOSE OF EACH PIER. 2 PIERS IN THE BACKWATER CHANNEL EACH HAVE HEAVY CORROSION OF THE STEEL ENCASEMENT AND ARE SPLIT AT CORNERS. LOOSE AGGREGATE APPEARS THRU SPLITS. BELOW THE STEEL THERE IS HEAVY SCALING/SPALLING EXPOSING SOME REINFORCEMENT. AVERAGE 3" TO 4" DEEP SPALLS ON FACE; MAX 12" DEEP ON CORNERS.

Inspection History:

Inspection Date: 05/27/2008 **Inspector:** D. Coffey

Deck: 4 Poor
Super: 3 Serious
Substr: 5 Fair
Culvert: N N/A (NBI)

Notes:

DPC - inspection comments-
CONCRETE DECK- ELEMENTS IN POOR CONDITION. LIGHT CRACKS AND MODERATE SPALLS IN AREAS WITH REBAR EXPOSED AND RUSTING, UNDERSIDE. HEAVY LEAKING. TOP OF DECK- FINE CRACKS MINOR SPALLS. PATCHED AREAS. MANY EXPANSION JOINTS REPAIRED.
SUPERSTRUCTURE- ELEMENTS IN SERIOUS CONDITION. BRIDGE HAS HEAVY SECTION LOSS AND HOLED AREAS. HEAVY PACK RUST.
SUBSTRUCTURE- ELEMENTS IN FAIR CONDITION. CONCRETE PIER CAP AND COLUMN REPAIRS IN PROGRESS. SOME LARGE CRACKS AND SPALLS.
LIFT MOTOR AT SOUTH VIBRATING BRIDGE AT 7' HEIGHT TO 15' HEIGHT 11/28/07. BUILDING VIBRATING. HEAVY DETERIORATION OF LIFT BUILDING AT BOTTOM. SEVERAL TIMBERS ON RR SPAN HAVE HEAVY DECAY AND ARE CRUSHING. STEEL RR TRACK LIFTING 2" AT NORTH WEST LIFT SPAN.

PICTURES: C371-
7. PIER #6; CWIP.
8. STEEL HOLED AT PIER #6.
9. DECK AND CURB SPALLED OVER EXTERIOR STRINGER AT WEST. TYPICAL OF SEVERAL AREAS.
10. DECK SPALLED AT LIFT SPAN. TYPICAL OF SEVERAL AREAS.
11. STEEL PLATES HOLED AND PLATED AND DEFORMED UNDER COMPRESSION SEAL JOINT AT ME. END OF RR SPAN.
12. IMPACT DAMAGE TO GIRDER AT NORTH EAST ME. END.
13. NEW ELECTRIC STATION AT ME. END UNDER BRIDGE.

Inspection Date: 04/09/2008 **Inspector:** DPC

Deck: 4 Poor
Super: 3 Serious
Substr: 5 Fair
Culvert: N N/A (NBI)

Notes:

DPC - inspection comments-
CONCRETE DECK- ELEMENTS IN POOR CONDITION. LIGHT CRACKS AND MODERATE SPALLS IN AREAS WITH REBAR EXPOSED AND RUSTING, UNDERSIDE. HEAVY LEAKING. TOP OF DECK- FINE CRACKS MINOR SPALLS. PATCHED AREAS. SEVERAL EXPANSION JOINTS DAMAGED.
SUPERSTRUCTURE- ELEMENTS IN SERIOUS CONDITION. BRIDGE HAS HEAVY SECTION LOSS AND HOLED AREAS.
SUBSTRUCTURE- ELEMENTS IN FAIR CONDITION. CONCRETE PIER CAP AND COLUMN REPAIRS IN PROGRESS. CRACKS AND SPALLS.
LIFT MOTOR AT SOUTH VIBRATING BRIDGE AT 7' HEIGHT TO 15' HEIGHT 11/28/07. BUILDING VIBRATING. HEAVY DETERIORATION OF LIFT BUILDING AT BOTTOM. SEVERAL TIMBERS ON RR SPAN HAVE HEAVY DECAY AND ARE CRUSHING. STEEL RR TRACK LIFTING 2" AT NORTH WEST LIFT SPAN. NOT ABLE TO MAKE LIFT 4/8/08 AT 3:AM. YATES ELECTRIC MAKING REPAIRS 4/9/08.

PICTURES: C368-
7 - JOINT DAMAGED AT SOUTH.
8 - CURB SPALLED WITH REBAR EXPOSED AT SOUTH WEST.

Inspection History:

Inspection Date: 11/28/2007 **Inspector:** DPC

Deck: 4 Poor
Super: 3 Serious
Substr: 5 Fair
Culvert: N N/A (NBI)

Notes:

DPC - inspection comments-
CONCRETE DECK- ELEMENTS IN POOR CONDITION. LIGHT CRACKS AND MODERATE SPALLS IN AREAS WITH REBAR EXPOSED AND RUSTING, UNDERSIDE. HEAVY LEAKING. TOP OF DECK- FINE CRACKS MINOR SPALLS. PATCHED AREAS. MANY EXPANSION JOINTS REPAIRED.
SUPERSTRUCTURE- ELEMENTS IN SERIOUS CONDITION. BRIDGE HAS HEAVY SECTION LOSS AND HOLED AREAS.
SUBSTRUCTURE- ELEMENTS IN FAIR CONDITION. CONCRETE PIER CAP AND COLUMN REPAIRS IN PROGRESS. CRACKS AND SPALLS.
LIFT MOTOR AT SOUTH VIBRATING BRIDGE AT 7' HEIGHT TO 15' HEIGHT 11/28/07. BUILDING VIBRATING. HEAVY DETERIORATION OF LIFT BUILDING AT BOTTOM. SEVERAL TIMBERS ON RR SPAN HAVE HEAVY DECAY AND ARE CRUSHING. STEEL RR TRACK LIFTING 2" AT NORTH WEST LIFT SPAN.

PICTURES: C330-16 THRU 22.

Inspection Date: 08/07/2007 **Inspector:** RLM

Deck: 4 Poor
Super: 3 Serious
Substr: 5 Fair
Culvert: N N/A (NBI)

Notes:

RLM inspection comments-
CONCRETE DECK- ELEMENTS IN POOR CONDITION. LIGHT CRACKS AND MODERATE SPALLS IN AREAS WITH REBAR EXPOSED AND RUSTING, UNDERSIDE. HEAVY LEAKING. TOP OF DECK- LIGHT CRACKS AND SPALLS. PATCHED AREAS.
SUPERSTRUCTURE- ELEMENTS IN SERIOUS CONDITION. AREAS OF STRAPING HOLED ON LOWER CHORD, SOUTH OF LIFT SPAN. NEW LIMIT SWITCH ON RR SPAN. MOTORS REPAIRED ON RR SPAN. STRINGER SOUTH OF LIFT SPAN IS HOLED THROUGH TOP FLANGE AT NORTH END. MOTORS REBUILT AT NORTH AND SOUTH TOWERS 11/06. SOUTH APPROACH, EAST EXTERIOR CHANNEL HOLED THROUGH WEB, OVER WATERWAY CHANNEL.
SUBSTRUCTURE- ELEMENTS IN FAIR CONDITION.

PIC(S): C354- 15- 26. PIC(S): C355- 1- 9.

Inspection Date: 11/16/2006 **Inspector:** RLM

Deck: 4 Poor
Super: 3 Serious
Substr: 5 Fair
Culvert: N N/A (NBI)

Notes:

RLM inspection comments-
CONCRETE DECK- ELEMENTS IN POOR CONDITION. LIGHT CRACKS AND MODERATE SPALLS IN AREAS WITH REBAR EXPOSED AND RUSTING, UNDERSIDE. HEAVY LEAKING. TOP OF DECK- FINE CRACKS MINOR SPALLS . PATCHED AREAS. MANY EXPANSION JOINTS REPAIRED.
SUPERSTRUCTURE- ELEMENTS IN SERIOUS CONDITION. BRIDGE IS IN UP POSITION DUE TOO FAILED UNDERWATER POWER CABLE. REPAIRS IN PROGRESS.
SUBSTRUCTURE- ELEMENTS IN FAIR CONDITION. CONCRETE PIER CAP AND COLUMN REPAIRS IN PROGRESS.

PIC(S): C330- 16- 22.

Inspection History:

Inspection Date: 07/11/2006 **Inspector:** DEP

Deck: 4 Poor
Super: 6 Satisfactory
Substr: 5 Fair
Culvert: N N/A (NBI)

Notes:

Bogus for Pontis and Oracle review
DPC inspection comments -
CONCRETE DECK- ELEMENTS IN POOR CONDITION. LIGHT CRACKS AND MODERATE SPALLS IN SEVERAL AREAS WITH REBAR EXPOSED AND RUSTING. HEAVY LEAKING. TOP OF DECK- FINE CRACKS MINOR SPALLS. DEPRESSED AREAS. CWIP.
CURBS- LIGHT CRACKS AND SPALLS WITH REBAR EXPOSED. REPAIRED AREAS.
30" CONCRETE SIDEWALK- FINE CRACKS AND MINOR SPALLS. REPAIRED AREAS.
DRAINS- STEEL IN POOR CONDITION. POLE LIGHTS- MOUNTS RUSTED. JOINT LEAKAGE HEAVY. EXPANSION DEVICE- FINGER JOINTS- FINGERS MISSING, BROKEN AND CRACKED WELDS. COMPRESSION SEALS DAMAGED AND LEAKING. G.T. SEALS DAMAGED, LEAKING AND HOLED.
SUPERSTRUCTURE- ELEMENTS IN FAIR CONDITION. ROCKERS AND ELASTOMERIC- RUSTED WITH SECTION LOSS.
STRINGERS- FEW HOLES IN EXTERIORS. OTHERS RUSTED WITH SECTION LOSS.
GIRDERS- HEAVILY RUSTED WITH SECTION LOSS AT JOINTS. WEST GIRDER HOLED AT PIER #3 IN TWO AREAS. FLOOR BEAMS- HEAVILY RUSTED AT JOINTS WITH SECTION LOSS. TRUSSES- RUSTED WITH SECTION LOSS. BATTEN PLATES HOLED IN SEVERAL AREAS. SIDEWALK SUPPORT CHANNELS- HOLED IN SEVERAL AREAS. LATERAL BRACING- RUSTED. CRACKED WELDS AT RR SPAN. STEEL COLUMNS RUSTED WITH SECTION LOSS AND LARGE HOLES THROUGH WEBS. HEAVY SECTION LOSS ON BOLTS. ONE HOLED AT SOUTH WEST RR SPAN AND CRACKED WELD. CONCRETE PIERS AND CAPS HEAVILY CRACKED AND SPALLED. LIFT MACHINERY APPEARS OK. MINOR PROBLEMS. RR SHORT SPAN APPEARS OK. LIFT BUILDING IN FAIR CONDITION. WATER PROBLEM. SMALL RR SPAN OPEN THIS DATE.

PICTURE: C268-01.

Inspection Date: 05/01/2006 **Inspector:** DPC

Deck: 4 Poor
Super: 3 Serious
Substr: 5 Fair
Culvert: N N/A (NBI)

Notes:

Sufficiency Rating Calculation Accepted by DEP at 7/11/2006 08:21:46
DPC inspection comments-
CONCRETE DECK- ELEMENTS IN POOR CONDITION. LIGHT CRACKS AND MODERATE SPALLS IN SEVERAL AREAS WITH REBAR EXPOSED AND RUSTING. HEAVY LEAKING. TOP OF DECK- FIN

Inspection Date: 04/03/2006 **Inspector:** RLM

Deck: 4 Poor
Super: 3 Serious
Substr: 5 Fair
Culvert: N N/A (NBI)

Notes:

RLM inspection comments -
CONCRETE DECK- ELEMENTS IN POOR CONDITION. LIGHT CRACKS AND MODERATE SPALLS IN SEVERAL AREAS WITH REBAR EXPOSED AND RUSTING. HEAVY LEAKING. TOP OF DECK- FINE CRACKS MINOR SPALLS. DEPRESSED AREAS.
CURBS- LIGHT CRACKS AND

Inspection Date: 11/29/2005 **Inspector:** DPC

Deck: 5 Fair
Super: 6 Satisfactory
Substr: 5 Fair
Culvert: N N/A (NBI)

Notes:

DPC inspection comments -
CONCRETE DECK- ELEMENTS IN POOR CONDITION. LIGHT CRACKS AND MODERATE SPALLS IN SEVERAL AREAS WITH REBAR EXPOSED AND RUSTING. HEAVY LEAKING. TOP OF DECK- FINE CRACKS MINOR SPALLS. DEPRESSED AREAS. CWIP.
CURBS- LIGHT CRACKS

Inspection History:

Inspection Date: 07/15/2005 **Inspector:** DPC

Deck: 4 Poor
Super: 5 Fair
Substr: 5 Fair
Culvert: N N/A (NBI)

Notes:
Sufficiency Rating Calculation Accepted by DEP at 03/02/2006 09:35:53
DPC inspection comments -
CONCRETE DECK- ELEMENTS IN POOR CONDITION. LIGHT CRACKS AND MODERATE SPALLS IN SEVERAL AREAS WITH REBAR EXPOSED AND RUSTING. HEAVY LEAKING. TOP OF DECK-

---

Inspection Date: 10/28/2004 **Inspector:** DPC

Deck: 4 Poor
Super: 5 Fair
Substr: 5 Fair
Culvert: N N/A (NBI)

Notes:
DPC inspection comments -
CONCRETE DECK- ELEMENTS IN POOR CONDITION. LIGHT CRACKS AND MODERATE SPALLS IN SEVERAL AREAS WITH REBAR EXPOSED AND RUSTING. HEAVY LEAKING. TOP OF DECK- FINE CRACKS MINOR SPALLS. DEPRESSED AREAS. CURBS- LIGHT CRACKS AND SP

Inspection Date: 11/06/2003 **Inspector:** DPC

Deck: 4 Poor
Super: 5 Fair
Substr: 5 Fair
Culvert: N N/A (NBI)

Notes:
Sufficiency Rating Calculation Accepted by DEP at 6/2/2004 14:03:55
DPC inspection comments -
CONCRETE DECK- ELEMENTS IN POOR CONDITION. LIGHT CRACKS AND MODERATE SPALLS IN SEVERAL AREAS WITH REBAR EXPOSED AND RUSTING. HEAVY LEAKING. TOP OF DECK- FI

Inspection Date: 10/30/2003 **Inspector:** DPC

Deck: 4 Poor
Super: 3 Serious
Substr: 5 Fair
Culvert: N N/A (NBI)

Notes:
DPC inspection comments -
CONCRETE DECK- ELEMENTS IN FAIR CONDITION. LIGHT CRACKS AND MODERATE SPALLS IN SEVERAL AREAS WITH REBAR EXPOSED EXPOSED AND RUSTING. TOP OF DECK- FINE CRACKS MINOR SPALLS. CURBS- LIGHT CRACKS AND MINOR SPALLS. REPAIRED ARE

Inspection Date: 05/10/2001 **Inspector:** D. Coffey

Deck: 4 Poor
Super: 5 Fair
Substr: 5 Fair
Culvert: N N/A (NBI)

Notes:
DPC inspection comments -
CONCRETE DECK- ELEMENTS IN POOR CONDITION. LIGHT CRACKS AND MODERATE SPALLS IN SEVERAL AREAS WITH REBAR EXPOSED AND RUSTING. HEAVY LEAKING. TOP OF DECK- FINE CRACKS MINOR SPALLS. DEPRESSED AREAS. CWIP. CURBS- LIGHT CRACK

Inspection Date: 09/29/1999 **Inspector:** DPC

Deck: 5 Fair
Super: 6 Satisfactory
Substr: 6 Satisfactory
Culvert: N N/A (NBI)

Notes:
Sufficiency Rating Calculation Accepted by DEP at 07-06-2000 15:21:33
DPC inspection comments - LIFT INSPECTION START 9/29/99 END 10/6/99.
CONCRETE DECK - LIGHT CRACKS AND MODERATE SPALLS IN SEVERAL AREAS WITH REBAR EXPOSED EXPOSED AND RUSTING. TOP OF

Inspection Date: 05/01/1997 **Inspector:** Not Available

Deck: 6 Satisfactory
Super: 6 Satisfactory
Substr: 7 Good
Culvert: N N/A (NBI)

Notes:
Sufficiency Rating Calculation Accepted by DEP at 12-23-98 08:11:39

Bridge Inspection Report

Portsmouth 251/108

Inspection History:

Inspection Date: 06/01/1995 **Inspector:** Not Available
Notes:
Deck: 6 Satisfactory
Super: 6 Satisfactory
Substr: 7 Good
Culvert: N N/A (NBI)

Inspection Date: 11/01/1993 **Inspector:** Not Available
Notes:
Deck: 6 Satisfactory
Super: 7 Good
Substr: 7 Good
Culvert: N N/A (NBI)

Inspection Date: 09/01/1991 **Inspector:** Not Available
Notes:
Deck: 6 Satisfactory
Super: 7 Good
Substr: 7 Good
Culvert: N N/A (NBI)

Bridge Lighting and Utilities: *POLE LIGHTS APPEAR OK*
Traffic Sign Notes: *OK.*
Traffic Sign Mounts: *OK.*

Copy Distribution:

- [ ] (2) Bureau of Municipal Hghways
- [ ] (3) Bureau of Municipal Hghways
- [ ] Bureau of Turnpikes
- [x] Border State
- [ ] Bureau of Rail and Transit
- [ ] Army Corps Of Engineers
- [ ] Railroad
- [ ] Dept. of Res. and Econ. Dev.
- [ ] Dept. of Environmental Services
- [ ] USDA Forest Service
- [ ] Bureau of Traffic

Appendix B
Photos

Section I: Superstructure and Deck - Roadway Approach Spans

Section II: Superstructure, Deck and Towers - Truss Spans

Section III: Superstructure and Deck - Railroad Approach Spans

Section IV: Bearings

Section V: Substructure

Section VI: Wearing Surfaces and Bridge Railing

Section I:

Superstructure and Deck - Roadway Approach Spans

Photo I-1: Span 10, Bay 3. Curb Stringer S1 (West) Deterioration.

Photo I-2: Span 4, Bay 3. Curb Stringer S1 (West) Deterioration.

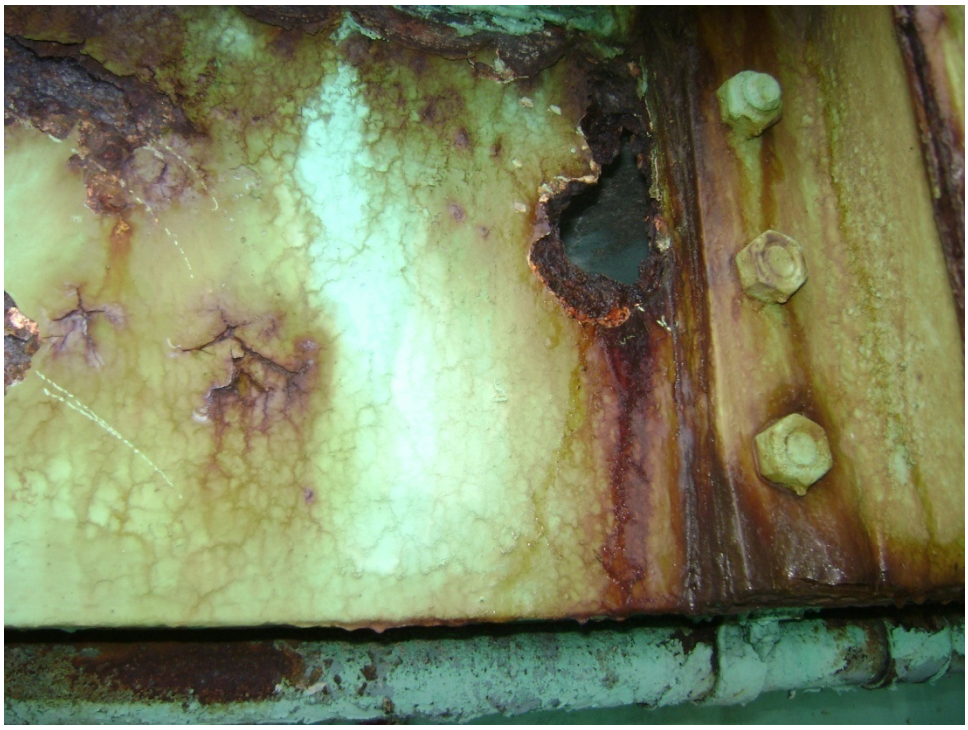

Photo I-3: Span 4, Bay 3. East Fascia Beam Deterioration.

Photo I-4: Span 4, Floorbeam 3. East Cantilever Top Flange and Concrete Deterioration at End of the Plate.

Photo I-5: Span 4, Floorbeam 3. East Cantilever Concrete Deterioration with Exposed Reinforcing

Photo I-6: Concrete Curb at Pier 4. Deck Spalling below Concrete Curb.

Photo I-7: Span 5, Bay 1. East Fascia Beam Deterioration.

Photo I-8: Span 9, Bay 1. Curb Stringer S1 (West) Deterioration.

Photo I-9: Span 5, Floorbeam 3. West Cantilever Bottom Flange Paint Scaling and Laminar Corrosion.

Photo I-10: Span 6, Floorbeam 3. East Cantilever Top Flange Deterioration.

Photo I-11: Span 6, Bay 3. Curb Stringer S4 (East) Deterioration.

Photo I-12: Span 6, Floorbeam 3. West Cantilever Top Flange Deterioration at End of Tie Plate.

Photo I-13: Span 8, Floorbeam 2. East Girder Pack Rust between Back-to-Back Angles at Floorbeam 2 Cantilever

Photo I-14: Span 8, Bay 3. Curb StringerS1 (West) Top Flange Deterioration and Concrete Spalling.

Photo I-15: Span 9, Bay 1. Curb Stringer S1 (East) Bottom Flange Deterioration.

Photo I-16: Span 13, Bay 1. Curb Stringer S4 (East) Bottom Flange Deterioration.

Photo I-17: Span 13, Bay 2. West Face of Curb S1 (West) Stringer Deterioration.

Photo I-18: Span 13, Bay 1. East Face of Curb Stringer S1 (West) Deterioration.

Photo I-19: Span 21, Floorbeam 2. West Cantilever Bottom Flange Paint Scaling and Laminar Corrosion.

Photo I-20: Span 12, Bay 3. Curb Stringer S4 (East) Deterioration.

Photo I-21: Span 12, Bay 3. Curb Stringer S1 (West) Deterioration.

Photo I-22: Span 2, Floorbeam 3. Top Flange Holed.

Photo I-23: Expansion Joint at Pier 3. Joint Leaking and Member Heavy Rusting.

Photo I-24: Span 6, Floorbeam 3. Top Flange Holed at Midspan.

Photo I-25: Span 6, Floorbeam 3. Bottom Flange Loss adjacent to Previous Welded Repair Plate.

Photo I-26: Span 8, Floorbeam 3. Top Flange Deterioration.

Photo I-27: Span 8, Floorbeam 3. East Cantilever Top Flange Deterioration.

Photo I-28: Span 8. West Girder Pack Rust.

Photo I-29: Deck over Pier 8. Deck Spalling with Exposed Reinforcing.

Photo I-30: Span 10, Floorbeam 3. East Cantilever Top Flange Deterioration.

Photo I-31: Span 10, Floorbeam 3. West Cantilever Top Flange Deterioration at End of Tie Plate.

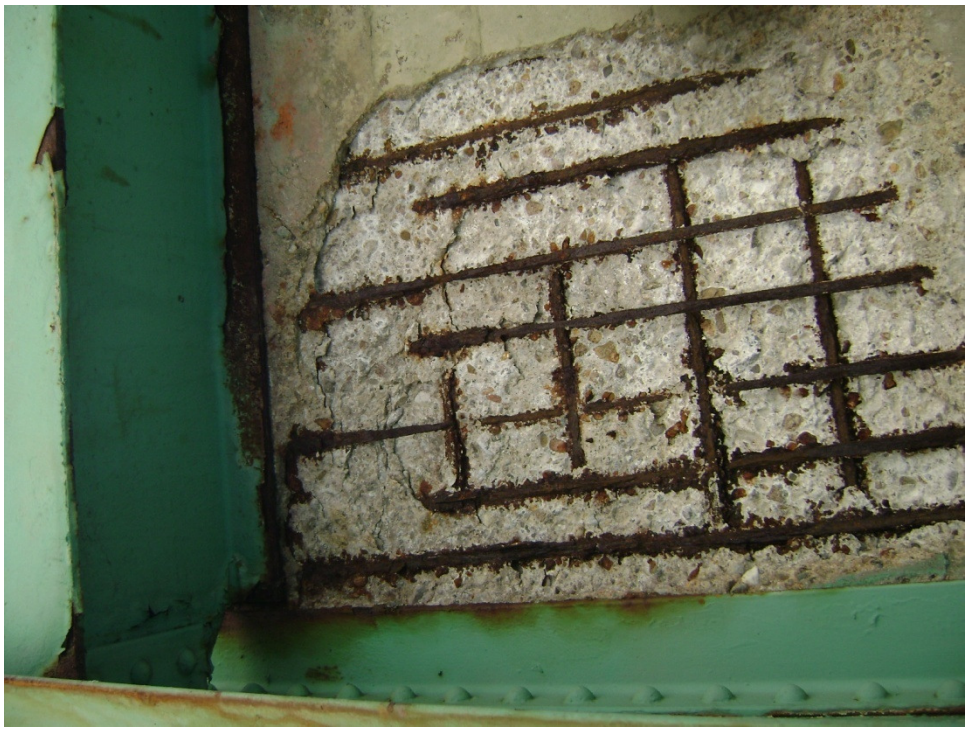

Photo I-32: Span 11, Floorbeam 1. Deck Spalling with Exposed Reinforcing near Floorbeam.

Photo I-33: Span 12, Floorbeam 0. East Cantilever Bottom Flange Paint Scaling and Laminar Corrosion.

Photo I-34: Span 12, Floorbeam 3. West Cantilever Top Flange Deterioration.

Photo I-35: Span 12, Floorbeam 0 and Span 11, Floorbeam 3. West Cantilever Top Flange Deterioration.

Photo I-36: Span 13, East Girder. Bottom Flange Deterioration at Hinge near Pier 13.

Photo I-37: Span 13, East Girder. Bottom Flange Deterioration at Hinge near Pier 13.

Photo I-38: Span 13, West Girder. Bottom Flange Holed at Hinge near Pier 13

Photo I-39: Span 14, Roadway Deck, East Girder. Bottom Flange and Transverse Stiffener Rust Pack.

Photo I- 40: Span 15, Roadway Deck, Floorbeam 4. Bottom Flange Deterioration.

Photo I-41: Span 21, Roadway Deck, Floorbeam 4. Bottom Flange Deterioration.

Photo I-42: Span 24, East Girder. Deterioration at Hinge near Pier 23.

Photo I-43: Existing Typical Deck Repairs.

Photo I-44: Span 27, East Side. Rail Post Holed Web

Photo I-45: Span 1, East Side. Rail Post Connection at Floorbeam

Section II:

Superstructure, Deck and Towers - Truss Spans

Photo II-1: Truss Span 1, Bay 6, East Side. Metal drain pipe heavily corroded with holes. Laminar corrosion on bottom flange of stringer at drain. Condition typical of overhang stringers at metal downspouts.

Photo II-2: Truss Span 2, Bay 5, West Side. Metal drain pipe heavily corroded with holes. Laminar corrosion on bottom flange of stringer at drain. Condition typical of overhang stringers at metal downspouts.

Photo II-3: Truss Span 3, Bay 6, East Side. Metal drain pipe heavily corroded with holes. Laminar corrosion on bottom flange of stringer at drain.

Photo II-4: Truss Span 3, Floorbeam Overhang 7 at West Railing Support. Laminar corrosion on the top flange of the Floorbeam Overhang at the end, as well as rust and corrosion on the C-shaped Fascia Stringer. Condition typical of Floorbeam Overhang ends.

Photo II-5: Truss Span 3, Bay 3. East Side. Transverse cracks with efflorescence. Typical condition for Deck Overhang in portions between stringers.

Photo II-6: Truss Span 3, Bay 4, East Side. Spalls on deck underside at I-shaped Overhang Stringer with exposed rebar. Spall runs full-length of bay and is up to 1.5” deep.

Photo II-7: Truss Span 3, Bay 1, West Side. Large spall in deck underside with exposed rebar. Spall is approximately 4.5’ wide’ x 10’ long x 1.5” deep.

Photo II-8: Truss Span 3, Bay 6, East Side. Previously patched spall in deck underside near connection of the Top Chord and Floorbeam Overhang.

Photo II- 9: Truss Span 2, Bay 8, East Side. Laminar corrosion on I-shaped Overhang Stringer adjacent to tower.

Photo II-10: Truss Span 2, Operator House Support. Floor system for walkway shown.

Photo II-11: Truss Span 4, Barricade Arm Support at Floorbeam Overhang 3, West Side. Members at the joint between the sidewalk deck and barricade support deck exhibit surface rust.

Photo II-12: Truss Span 2, Floorbeam Overhang 5, East Side. Laminar corrosion at end of Floorbeam Overhang top flange underneath the Barricade Support. There is a corrosion hole on the end stiffener.

Photo II-13: Truss Span 5, Bottom Chord L5-L6 East. Fascia and top side of bottom chords. Typical condition shown.

Photo II-14 : Truss Span 5, Bottom Chord L5-L6 East. Fascia side of Bottom Chord. Typical truss web and flange condition shown. There is surface rust and some laminar corrosion on the batten plate.

Photo II-15: Truss Span 1, Joint L2 West. Interior of Bottom Chord at joint. Vertical web and splice plate shown in back of photo. Conditions typical of interior of bottom chord at joints.

Photo II-16: Truss Span 1, Bottom Chord L4-L5 West. Surface rust with bleeding and laminar corrosion on exterior web.

Photos II-17 and II-18: Truss Span 3, Bottom Chord L3-L4 West. Welded utility connection to bottom chord. Surface rust on top flange and web. Heavy corrosion on rivet head.

Photo II-19: Inside of Truss Span 2, Bottom Chord L0-L1 West. Laminar corrosion on the bottom flange over the full length.

Photo II-20: Top flange of Truss Span 5 Bottom Chord L2-L3 East. Typical laminar corrosion at top flange splice plates and batten plates.

Photo II-21: Truss Span 5, Bottom Chord L3-L4 West. Surface rust at rivets with bleeding. Typical condition for interior face of bottom chords.

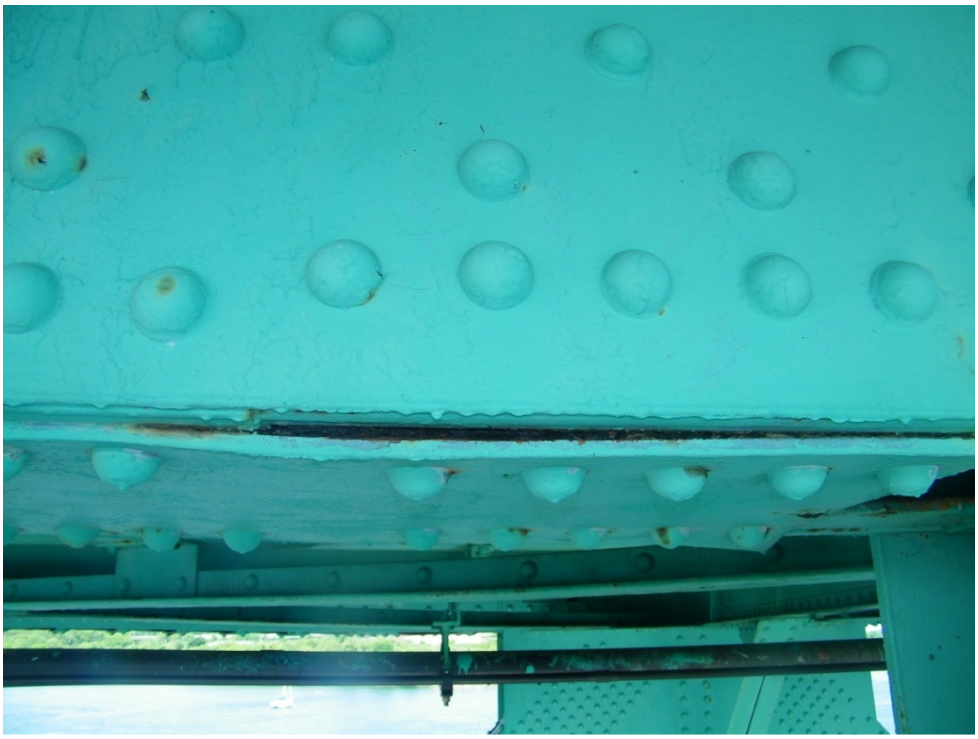

Photo II-22: Truss Span 2, Top Chord L0-U1 East. Pack rust with prying between the bottom flange and the end batten plate. Condition occurs on several top chord members.

Photo II-23: Truss Span 4, Top Chord U0-U1 East. Pack rust with prying between the bottom flange and web.

Photo II-24: Truss Span 3, Top Chord U0-U1 West. Minimal to no surface rust; typical exterior web condition.

Photo II-25: Truss Span 2, Top Chord U0-U1 East. Surface rust on top flange and bottom flange. Typical top chord condition.

Photo II-26: Truss Span 3, Top Chord U0-U1 at Joint U1. Pack rust between splice plate and exterior web causing prying.

Photo II-27: Truss Span 2, Diagonal L0-U1 West. Laminar corrosion on exterior web of Diagonal. All diagonals at span ends in similar, but less severe, condition.

Photo II-28: Truss Span 1, Diagonal L0-U1 West. Heavily deteriorated batten plate with corrosion hole at Joint L0.

Photo II-29: Truss Span 4, Diagonal U3-L4 West. Surface rust on top flange and lacing bars. Condition typical of diagonals.

Photo II-30: Truss Span 1, Diagonal L0-U1 West. Laminar corrosion on interior web of diagonal.

Photo II-31: Truss Span 5, Vertical L7-U7 at Joint L7. Laminar corrosion on the exterior flange at the interface with the batten plate.

Photo II-32: Truss Span 5, Vertical L4-U4. 3” wide by 1” high corrosion hole in exterior web at Joint L4. Area within ½” of corrosion hole has up to 50% section loss.

Joint 33: Truss Span 5, Vertical L5-U5 East. Pack rust between web of vertical and splice plate typical at bottom joints.

Photo II-34: Truss Span 2, Vertical L5-U5 East at Joint L5. Pack rust with prying between vertical flange and gusset plate. Occurs at several lower joints, see Appendix C for locations.

Photo II-35: Truss Span 3, Joint L7-U7 West. Surface rust on exterior flange typical of truss verticals. Pitting on exterior flange at Joint L7.

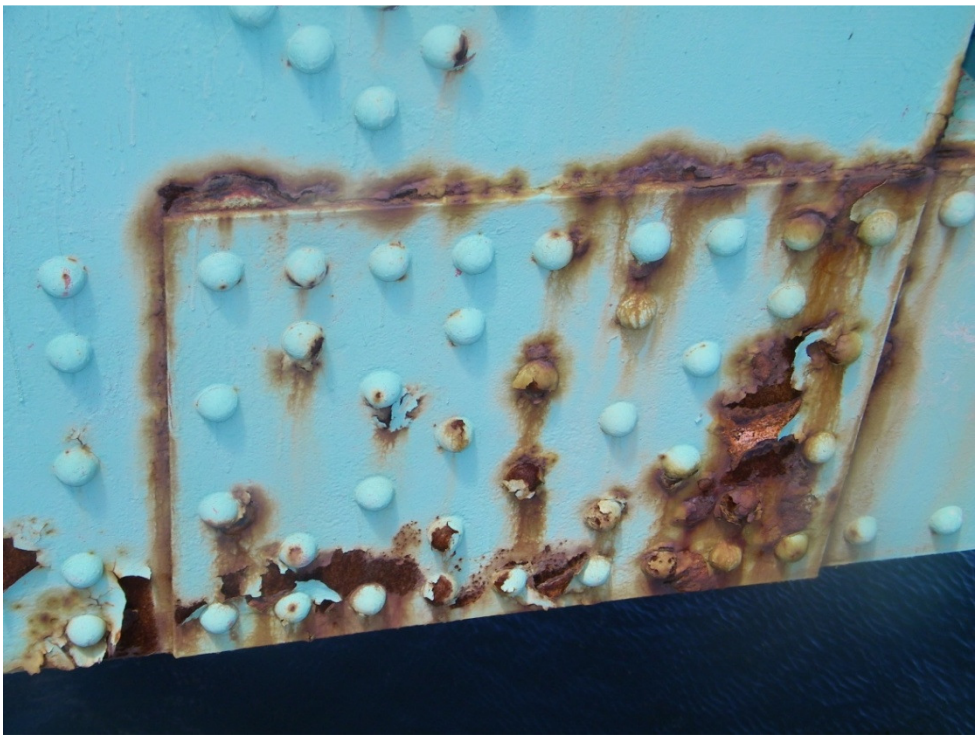

Photo II-36: Truss Span 1, Joint L6 East. Pitting and laminar corrosion on gusset plate at interface with splice plate.

Photo II-37: Truss Span 5, Joint L0 East. Surface rust on gusset plates with corrosion at interface between plates. Other lower gusset plates L0 and L8 similar.

Photo II-38: Truss Span 4, Joint L7 West. Surface rust with laminar corrosion on the gusset plate, as well as on the bottom chord web at the gusset plate interface.

Photo II-39: Truss Span 2, Joint L7 West. Laminar corrosion on gusset plate and on connection for the Operator House support.

Photo II-40: Truss Span 3, Joint L0 West. Laminar corrosion on the gusset plate at rivets, and on horizontal struts bracing the truss at the lifting girder.

Photo II-41: Truss Span 3, Joint L8 West. Surface rust on the truss vertical and the Lower Hanger at the Lifting Girder. Laminar corrosion on the batten plate between the Lower Hanger and the Vertical.

Photo II-42: Truss Span 3, Joint U7 West. Some paint loss and surface rust on the gusset plate. Rust with bleeding on the Floorbeam Overhang at the gusset plate interface. Conditions typical of Upper Gusset Plates.

Photo II-43: Truss Span 2, Bay 8, East Side. Laminar corrosion on I-shaped Overhang Stringer. Multiple spalls in bay with a depth up to 2.5”.

Photo II-44: Truss Span 3, Vertical L3-U3. Pack rust on interior Vertical flange at interface with Roadway Floorbeam knee brace. Condition typical of truss verticals.

Photo II-45: Span 4, Joint U0 East. Pack rust with prying at bottom edge of gusset plate at U0 East. Condition typical of gusset plates at U0 and U8 Truss Joints.

Photo II-46: Span 4, Joint U8 East. Laminar corrosion on interior face of gusset plates at Joints U0 and U8 is typical.

Photo II-47: Truss Span 4, Barricade Arm Support at Floorbeam Overhang 3, West Side. Laminar corrosion on the C-shaped Fascia Stringer at the connection to the barricade support.

Photo II-48: Truss Span 5, Bay 8. West Stringer at the connection to the Lower Lateral Bracing. Surface rust on all surfaces.

Photo II-49: Truss Span 2, Joint L1 East. Laminar corrosion on Lower Lateral Bracing Gusset Plate. Condition typical of LLB Gussets.

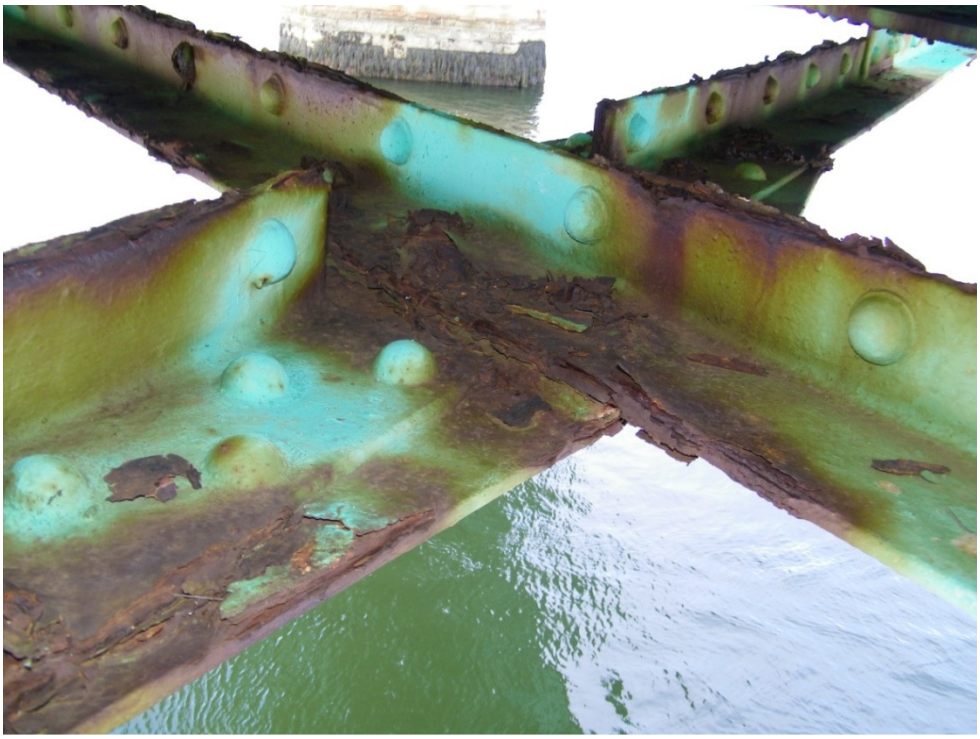

Photo II-50: Truss Span 5, Bay 4. Lower Lateral Bracing at middle connection. Laminar corrosion on top surfaces of bracing in this bay.

Photo II-51: Truss Span 2, Bay 7. Laminar corrosion on the Southern Cross Frame gusset plate.

Photo II-52: Truss Span 3, Bay 1. Laminar corrosion on the Southern Cross Frame gusset plate with a corrosion hole.

Photo II-53: Truss Span 2, Bay 1. Typical Cross Frame Condition. Surface rust and some laminar corrosion on top strut, as well as on top face of gusset plates.

Photo II-54: Truss Span 3, Bay 7. Upper Lateral Bracing. Pack rust with prying throughout member. Condition typical of Lower Lateral Bracing.

Photo II-55: Truss Span 1, Bay 8. Lower Lateral Bracing Connection to East Stringer. Rust and laminar corrosion on all surfaces adjacent to connection.

Photo II-56: Truss Span 1, Bay 6. Surface rust on bottom flange of East Stringer at connection to Floorbeam 6.

Photo II-57: Truss Span 3, Bay 8, East Stringer. Laminar corrosion and rust on top flange of stringer.

Photo II-58: Truss Span 3, Bay 4, Floorbeam 4. Floorbeam midspan shown. Surface rust on bottom flange and some laminar corrosion on top flange. Condition typical of Intermediate Floorbeams.

Photo II-59: Truss Span 1, Bay 4, West Stringer. Some surface rust on stringer web. Typical Stringer web condition.

Photo II-60: Truss Span 3, Bay 1, Floorbeam 0. Surface rust on web of End Floorbeam on east end of floorbeam.

Photo II-61: Span 3, Floorbeam 8, East end. Surface rust on Floorbeam top flange and laminar corrosion at top flange interface with the knee brace. Condition typical of Intermediate Floorbeam ends.

Photo II-62: Truss Span 3, Floorbeam 1, East end. Laminar corrosion and pack rust between Floorbeam bottom flange and Lower Lateral Gusset Plate. Condition typical of Floorbeam ends.

Photo II-63: Truss Span 3, Floorbeam 0. Rust and pitting on knee brace at ends of Lift Span. Condition typical of Truss Span 3 End Floorbeam knee braces.

Photo II-64: Pier 17 (South Tower), South Cross Girder. Laminar corrosion with corrosion holes on top flange. Condition typical of Cross Girders at Towers.

Photo II-65: Truss Span 3, South Bearing. Center bearing of lift span shown. Surface rust with minor corrosion on Bearing and End Floorbeam surfaces.

Photo II-66: Railroad Deck at North Tower, East Railroad Bearing Stringer. Pack rust and prying between stringer and support typical of Stringers at Towers.

Photo II-67: Railroad Deck at North Tower, Western Platform Stringer. 12” x 1” corrosion hole in stringer.

Photo II-68: South Tower, East Face. 53” crack in Tower Façade.

Photo II-69: South Tower, Northwest Corner. Tower façade is prying away up to 2.5”. Bed of grout found behind façade plates.

Photo II-70: North Tower Verticals. Pack rust with prying on fascia plate. Typical of Verticals.

Photo II-71: North Tower Anchorage has pitting and surface rust throughout.

Photo II-72: North Tower Diagonal Bracing, North Face, West Side. Bracing between Tower Panel Points T1 and T2 is bent out-of-plane.

Photo II-73: North Tower Diagonal Bracing, North Face, West Side. Bracing connections typically have minor pack rust at member interfaces.

Photo II-74: Lifting Girder at Pier 18 (North Tower). A 4.5” crack in steel angle connecting the top flange of the northwestern box-shaped strut to the truss gusset plate at Joint L8 West of Truss Span 3.

Photo II-75: Lifting Girder at Pier 18 (North Tower). A 4.5” crack in steel angle connecting the top flange of the northwestern box-shaped strut to the truss gusset plate at Joint L8 West of Truss Span 3.

Photo II-76: Lifting Girder at Pier 18 (North Tower). Laminar corrosion and rust at horizontal struts bracing the truss at Truss Span 3, Joint L8 West. Typical corrosion on horizontal struts at Truss Span 3 Lifting Girders.

Photo II-77: Lifting Girder at Pier 17 (South Tower). Laminar corrosion and rust, as well as corrosion holes, on the lacing bars of horizontal struts bracing the truss at Truss Span 3, Joint L0 West.

Photo II-78: Lifting Girder at Pier 17 (South Tower). Broken lacing bar on the I-shaped horizontal strut bracing the truss at Truss Span 3, Joint L0 East.

Photos II-79 and II-80: Span 2, Bay 7 West, Floor System at Operator House. Curb Stringer has laminar corrosion on the top flange, stay-in-place forms are rusted at end. Operator House support beams rusted with laminar corrosion at connections. Purlins in generally good condition.

Section III:

Superstructure and Deck - Railroad Approach Spans

Photo III-1: Span 15, Railroad Deck, West Fascia. Typical condition of exterior fascia for Railroad Approach Girders. Some surface rust on top surface of bottom flanges.

Photo III-2: Span 15, Railroad Deck, Cross Frame at North End. Surface rust and laminar corrosion on members typical of Railroad Approach Span End Cross Girders.

Photo III-3: Span 22, Railroad Deck, Northeast Bearing. Up to 80% section loss on nuts at girder-to-bearing connection. Section loss is typical of Railroad Deck Approach Spans.

Photo III-4: Span 15, Railroad Deck, East Girder. Laminar corrosion on top flange typical of Railroad Approach Span Girders.

Photo III-5: Span 15, Railroad Deck, East Girder. Pitting on bottom flange of girder for a distance of 12' from North Bearing.

Photo III-6: Span 21, Retractable Railroad Span Trolley Arm at Pier 20. Typical condition of Trolley Arm adjacent to Trolley Beam, with surface rust and some laminar corrosion at bolted arm splice. Welded ladder rungs typical of Trolley Arms.

Photo III-7: Retractable Railroad Approach Span 21, North Lifting Girder. Laminar corrosion on top flange over full-length, with more severe corrosion at ends, adjacent to knee brace.

Photo III-8: West Screw Housing Brace at Pier 21. Severe deterioration with up to 50% of cross-sectional area lost.

Section IV:

Bearings

Photo IV-1: Pier 16, West Bearings. Truss Span 2 Bearing has expanded approximately 1/2” from the neutral position. The West Bearing of Truss Span 1 is in the neutral position.

Photo IV-2: Pier 16, Truss Span 1, West Bearing. Laminar Corrosion on inside face of bearing gusset plates, as well as on pin. Condition typical of most Bearings.

Photo IV-3: Pier 16, Truss Span 2, West Bearing. Surface rust with some laminar corrosion on bearing plate and base plate. Condition typical of Truss Span Bearings.

Photo IV-4: Pier 17, Truss Span 2, East Bearing. Heavy laminar corrosion on all surfaces inside of bearing assembly.

Photo IV-5: Pier 17, Truss Span 3, West Bearing. Anchor bolt on fixed bearing bent. Typical of all Truss Span 3 Anchor Bolts at Pier 17.

Photo IV-6: West Girder, Span 3. Bearing Deterioration at Pier 3

Photo IV-7: Retractable Railroad Approach Span 21, Trolley Beam Bearing at Pier 22. Elastomeric Bearing has been crushed and is bulging.

Photo IV-8: Retractable Span Bearing Bulging at Pier 21.

Photo IV-9: Retractable Railroad Approach Span Bearing at Pier 20. West Bearing shown. Surface rust typical of all Retractable Railroad Approach Bearings.

Photo IV-10: Retractable Railroad Approach Span Bearing. Northwest Bearing shown. Laminar corrosion and section loss to bolt nuts typical of Bearing Plates.

Section V:

Substructure

Photo V-1: Pier 3, West Column. Concrete Deterioration with Exposed Reinforcing.

Photo V-2: Pier 3, East Column. Concrete Deterioration with Exposed Reinforcing.

Photo V-3: Pier 6, South Face Deterioration.

Photo V-4: Steel Plate Jackets of West Column of Pier 6.

Photo V-5: Looking Inside of Steel Encasing of West Column of Pier 6

Photo V-6: Pier 7, North Face Deterioration

Photo V-7: Pier 9 East Column Deterioration.

Photo V-8: Pier 12 Cracking at East Girder Bearing.

Photo V-9: Pier 13 Abutment Deterioration.

Photo V-10: Pier 13, Bridge Seat. Up to 4” of erosion on the bridge seat with exposed rebar.

Photo V-11: Pier 15, West Face. Large spall with corrosion at Southwest corner of Pier. Top face of pier spalled 6’ x 4’ x up to 6” deep.

Photo V-12: Pier 17, Southeast corner. Cracks with efflorescence and a 6”x3’ spall.

Photo V-13: Pier 17, Southeast corner. Concrete at corner beginning to spall adjacent to South Tower. The concrete is cracked and lifting away from the pier.

Photo V-14: Pier 18, Southeast corner. Large cracks with efflorescence adjacent to the base of the North Tower.

Photo V-15: Pier 19, East Face. Full-height spall and erosion on the East corner of the concrete cap.

Photo V-16: Pier 14, North Face. Hairline cracks on concrete cap and vegetation growing on portions of the pier below the high water elevation. Both conditions typical of Piers 16-20.

Photo V-17: Pier Bent 21, East Column of Bent. Bent Holed and Deteriorated.

Photo V-18: Pier 22 Column Holed.

Photo V-19: Pier 22 Column Deterioration (Looking Inside).

Photo V-20: South Abutment. Map Cracking and Spalling with Exposed Reinforcing.

Photo V-21: North Abutment East Pedestal Deterioration at Bearing Seat.

Section VI:

Wearing Surfaces and Bridge Railing

Photo VI-1: Wearing Surface Cracking in Span 2

Photo VI-2: Concrete Curb Deterioration over Pier 8

Photo VI-3: Concrete Curb Deterioration over Pier 10

Photo VI-4: Typical Deterioration at Bridge Handrail

Photo VI-5: Existing Typical Deck Repairs

Appendix C

Condition Summary Tables and Sketches

Appendix C

Part I: Truss Spans

Section A:

Truss Condition

Legend:

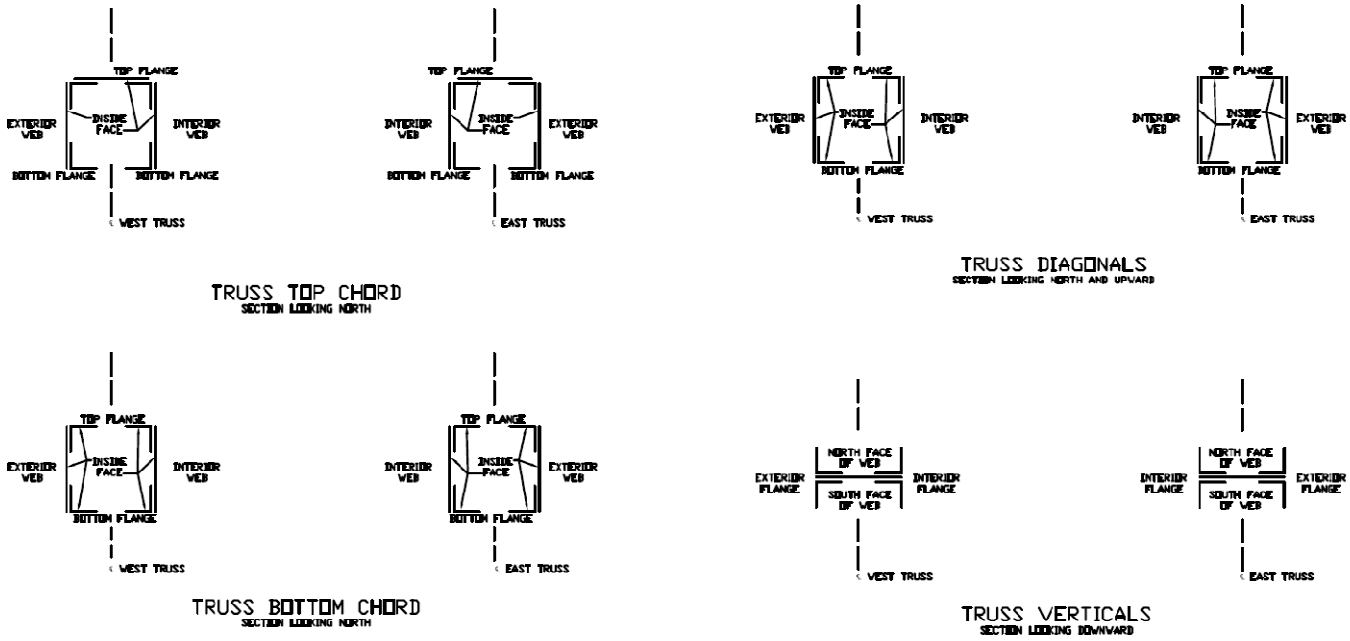

Sarah Mildred Long Bridge - Span 1

Bottom Chord

Member:	Rivet Head Condition	Lacing Bar/Batten Plate Condition	Structural Member Condition			
			Bottom flange	Top flange	Exterior Web	Interior Web
Typical Condition	Rivet heads on inside faces at Joints have up to 70% section loss. Less than 10% of rivets elsewhere have up to 20% section loss.	Surface rust on top batten plates and lacing bars..	Some surface rust on top face of horizontal legs. Laminar corrosion at joints.	Surface rust on top face, minor laminar corrosion at batten plate interfaces. Laminar corrosion at joints.	Surface rust on inside face at at joints. Isolated paint loss and surface rust on outside face.	Surface rust on inside face at at joints. Isolated paint loss on outside face and rust at less than 5% of rivet heads. Laminar corrosion at interface with gusset plates.
L2-L3 E	30% of rivets have 40% section loss.		Some surface rust on top face of horizontal legs. Laminar corrosion at joints and at splice plate.		Laminar corrosion on splice plate.	Laminar corrosion on splice plate.
L4-L5 W					Laminar corrosion on 30% of outside face surface area.	Laminar corrosion on bottom 6" of web at L5.
L6-L7 E		Laminar corrosion on batten plate at L7.				
L7-L8 W		Laminar corrosion on batten plate at L7.	Laminar corrosion at Batten plate at L7.			
L7-L8 E		Laminar corrosion on batten plate at L8 and L7.		Laminar corrosion at batten plates.		

Sarah Mildred Long Bridge - Span 1

Top Chord

Member:	Rivet Head Condition	Lacing Bar/Batten Plate Condition	Structural Member Condition			
			Bottom flange	Top flange	Exterior Web	Interior Web
Typical Condition	Surface rust on some inside face rivet heads.	Surfce rust on topside of bottom lacing bars and batten plates.	Surface rust on inside face of both legs, both sides.	Minor paint scaling with some surface rust on inside face.	Minor paint scaling with some surface rust on inside face.	Minor paint scaling with some surface rust on inside face.
U0-U1 W		Batten plate prying at U1.	Pack rust and prying at batten plate at U1.		Pack rust between web and bottom flange with prying.	Pack rust between web and bottom flange with prying.
U0-U1 E		Batten plate prying at U1.	Pack rust and prying at batten plate at U1.		Pack rust between web and bottom flange with prying.	Pack rust between web and bottom flange with prying.
U5-U6 W		Batten plate prying at U5.				
U7-U8 W		Batten plate prying at U7.	Pack rust and prying at batten plate at U7.			Pack rust between web and bottom flange with prying.
U7-U8 E		Batten plate prying at U7.	Pack rust and prying at batten plate at U7.		Pack rust between web and bottom flange with prying.	Pack rust between web and bottom flange with prying.

Note: Members not listed and member components left blank are similar to the Typical Condition listed.

Sarah Mildred Long Bridge - Span 1

Diagonals

Member:	Rivet Head Condition	Lacing Bar/Batten Plate Condition	Structural Member Condition			
			Bottom flange	Top flange	Exterior Web	Interior Web
Typial Condition	Paint loss and surface rust on less than 30% of rivet heads.	Top lacing bars/batten plates rusted with laminar corrosion on less than 5% of area.	Surface rust on top side of flange.	Surface rust at lacing bar interface.	Some paint loss and surface rust - less than 10% of surface	Some paint loss and surface rust - less than 5% of surface
L0-U1 W	Rivet heads at bottom batten plate up to 40% section loss.	Bottom batten plate heavily deteriorated with corrosion holes. Lacing bars rusted.		Laminar corrosion at lacing bar interface.	Laminar corrosion on inside face of web.	Laminar corrosion on inside face of web.
L0-U1 E		Lacing bars rusted				Laminar corrosion on inside face of web.
U3-L4 W					Laminar corrosion at interface with gusset plate at L4.	
L4-U5 W		Laminar corrosion on lacing bars throughout. Laminar corrosion on bottom batten plate at L4.	Laminar corrosion at batten plate at L4.		Laminar corrosion on 50% of surface of ourside face of web and at interface with gusset at L4.	
L6-U7 E		Batten plates rusted with laminar corrosion. Batten plate at L6 has 1" corrosion hole.			Laminar corrosion on outside face of web at L6.	
U7-L8 W		Laminar corrosion on lacing bars throughout. Pitting on top batten plate at U7. Laminar corrosion on bttom batten plate at L8.			Laminar corrosion on outside face of web.	

Note: Members not listed and member components left blank are similar to the Typical Condition listed.

Sarah Mildred Long Bridge - Span 1

Verticals

Member:	Rivet Head Condition	Lacing Bar/Batten Plate Condition	Structural Member Condition			
			North face of web	South face of web	Exterior Flange	Interior Flange
Typical Condition - Box shaped	Up to 20% section loss on less than 10% of rivet heads.	Surface rust on less than 10% of lacing bars. Surface rust on bottom batten plate.	Laminar corrosion at interface with splice plate inside of lower panel point. Minor paint scaling and rust inside of upper panel point.	Laminar corrosion at interface with splice plate inside of lower panel point. Minor paint scaling and rust inside of upper panel point.	Surface rust on less than 5% of surface area.	Pack rust between vertical and Roadyway Floorbeam knee brace at bottom of knee brace.
Typical Condition - I shaped	Rivet heads at splice plate inside of lower panel point have paint loss and surface rust.	N/A	Surface rust on less than 5% of surface area. Rusted around splice plate in area between lower gusset plates.	Surface rust on less than 5% of surface area. Rusted around splice plate in area between lower gusset plates.	Surface rust on less than 5% of surface area.	Pack rust between vertical and Roadyway Floorbeam knee brace at bottom of knee brace. Surface rust on less than 5% of surface area.
L0-U0 W			Laminar corrosion at L0	Laminar corrosion at L0		
L2-U2 E		Laminar corrosion on lacing bars near top gusset plate.	Laminar corrosion at interface of top two lacing bars.			
L3-U3 E					Laminar corrosion at interface with gusset plate at L3.	
L4-U4 W					Laminar corrosion at interface with gusset plate at L4.	
L4-U4 E					Laminar corrosion at interface with gusset plate at L4.	
L5-U5 W					Pack rust between web and flange.	
L6-U6 W					Laminar corrosion at lacing bar interface.	
L7-U7 E					Pack rust at connection to top batten plate.	Pack rust at connection to top batten plate.
L8-U8 E					Laminar corrosion near L8. Pack rust with prying at gusset U8.	

Note: Members not listed and member components left blank are similar to the Typical Condition listed.

Sarah Mildred Long Bridge - Span 2

Bottom Chord

Member:	Rivet Head Condition	Lacing Bar/Batten Plate Condition	Structural Member Condition			
			Bottom flange	Top flange	Exterior Web	Interior Web
Typical Condition	Rivet heads on inside faces at Joints have up to 70% section loss. Less than 10% of rivets elsewhere have up to 20%	Surface rust on top batten plates and lacing bars..	Some surface rust on top face of horizontal legs. Laminar corrosion at joints.	Surface rust on top face, minor laminar corrosion at batten plate interfaces. Laminar corrosion at joints.	Surface rust on inside face at at joints. Isolated paint loss and surface rust on outside face.	Surface rust on inside face at at joints. Isolated paint loss on outside face and rust at less than 5% of rivet heads. Laminar corrosion at interface with gusset plates.
L0-L1 W		Laminar corrosion on all batten plates.	Laminar corrosion on top of horizontal leg.	Surface rust on top face throughout. Laminar corrosion at interface with batten plates.	Laminar corrosion at L0 - 1/8" section loss.	
L1-L2 W	40% of rivet heads connecting bottom batten plates to bottom flange have 70% section loss.					
L2-L3 W		Pack rust on bottom batten plate.			Surface rust at 20% of rivet heads throughout.	Laminar corrosion on bottom 3" of web at L3.
L3-L4 W	Rivet heads connecting bottom batten plate to bottom flange at L3 have 70% loss.	All bottom batten plates deteriorated.				
L4-L5 W					Surface rust at 30% of rivet heads throughout. Paint failure with rust at middle 1" of web, full length. Appears to be scraped, but no gouges or other damage sustained by steel.	
L5-L6 W					Surface rust at 30% of rivet heads throughout. Paint failure with rust at middle 1" of web, full length. Appears to be scraped, but no gouges or other damage sustained by steel.	
L6-L7 E		Bottom lacing bars have pack rust at bottom flange interface.				
L7-L8 E		Laminar corrosion on bottom lacing bars.	Pack rust between bottom flanges and webs for 10' from L8.		Laminar corrosion full height at interface with gusset L8 and on inside face at joint L8.	Laminar corrosion on inside face at joint L8.

Note: Members not listed and member components left blank are similar to the Typical Condition listed.

Sarah Mildred Long Bridge - Span 2

Top Chord

Member:	Rivet Head Condition	Lacing Bar/Batten Plate Condition	Structural Member Condition			
			Bottom flange	Top flange	Exterior Web	Interior Web
Typical Condition	Surface rust on some inside face rivet heads.	Surfce rust on topside of bottom lacing bars and batten plates.	Surface rust on inside face of both legs, both sides.	Minor paint scaling with some surface rust on inside face.	Minor paint scaling with some surface rust on inside face.	Minor paint scaling with some surface rust on inside face.
U0-U1 W		Pack rust with prying at batten plate at U1.	Pack rust at batten plate at U1.			Pack rust with prying between bottom flange and web.
U0-U1 E		Pack rust with prying at batten plate at U1.	Pack rust at batten plate at U1.			
U2-U3 W		Pack rust with prying at batten plate at U3.	Pack rust at batten plate at U3		.....	
U2-U3 E		Pack rust with prying at batten plate at U3.	Pack rust at batten plate at U3			
U3-U4 W		Pack rust with prying at batten plate at U4.	Pack rust at batten plate at U4			
U3-U4 E		Pack rust with prying between flange and batten plate at U3.	Pack rust with prying between flange and batten plate at U3.			
U4-U5 W		Pack rust with prying at batten plate at U5.	Pack rust with prying at batten plate at U5.			
U4-U5 E		Pack rust with prying at batten plate at U5.	Pack rust with prying at batten plate at U5.			
U7-U8 W					Pack rust with prying between bottom flange and web.	
U7-U8 E				Surface rust on inside face at U8. Pack rust between top flange and web plate.		Pack rust with prying between bottom flange and web. Heavy laminar corrosion on web at U8.

Note: Members not listed and member components left blank are similar to the Typical Condition listed.

Sarah Mildred Long Bridge - Span 2

Diagonals

Member:	Rivet Head Condition	Lacing Bar/Batten Plate Condition	Structural Member Condition			
			Bottom flange	Top flange	Exterior Web	Interior Web
Typial Condition	Paint loss and surface rust on less than 30% of rivet heads.	Top lacing bars/batten plates rusted with laminar corrosion on less than 5% of area.	Surface rust on top side of flange.	Surface rust at lacing bar interface.	Some paint loss and surface rust - less than 10% of surface	Some paint loss and surface rust - less than 5% of surface
L0-U1 W		Laminar corrosion full height on lower half of diagonal.			Laminar corrosion full height on lower half of diagonal.	Laminar corrosion at lower gusset plate.
L0-U1 E		Pack rust with prying between batten plate and bottom chord at U1.	Rust on inside face.	Pack rust with prying between batten plate and bottom chord at U1.		
L2-U3 E		Laminar corrosion on ltop lacing bars.				
U3-L4 W		Laminar corrosion on lower batten plate.			Laminar corrosion at full height interface with lower gusset.	
L4-U5 W		Bottom batten plate at lower gusset severely deteriorated with corrosion holes.			Laminar corrosion on lower half of diagaonal. Laminar corrosion full height at interface with lower gusset.	
L6-U7 W		Two top batten plates at L6 have heavy laminar corrosion.				
U7-L8 W		Bottom batten plate at L8 deteriorated with corrosion hole.				
U7-L8 E		Top batten plate at L8 deteriorated with corrosion holes.			Laminar corrosion full height at interface with lower gusset.	

Note: Members not listed and member components left blank are similar to the Typical Condition listed.

Sarah Mildred Long Bridge - Span 2

Verticals

Member:	Rivet Head Condition	Lacing Bar/Batten Plate Condition	Structural Member Condition			
			North face of web	South face of web	Exterior Flange	Interior Flange
Typical Condition - Box shaped	Up to 20% section loss on less than 10% of rivet heads.	Surface rust on less than 10% of lacing bars. Surface rust on bottom batten plate.	Laminar corrosion at interface with splice plate inside of lower panel point. Minor paint scaling and rust inside of upper panel point.	Laminar corrosion at interface with splice plate inside of lower panel point. Minor paint scaling and rust inside of upper panel point.	Surface rust on less than 5% of surface area.	Pack rust between vertical and Roadyway Floorbeam knee brace at bottom of knee brace.
Typical Condition - I shaped	Rivet heads at splice plate inside of lower panel point have paint loss and surface rust.	N/A	Surface rust on less than 5% of surface area. Rusted around splice plate in area between lower gusset plates.	Surface rust on less than 5% of surface area. Rusted around splice plate in area between lower gusset plates.	Surface rust on less than 5% of surface area.	Pack rust between vertical and Roadyway Floorbeam knee brace at bottom of knee brace. Surface rust on less than 5% of surface area.
L0-U0 W		Section loss with corrosion holes on bottom two batten plates.				
L1-U1 W					Laminar corrosion at interface with lower gusset plate.	
L1-U1 E					Pack rust with prying at gusset U1.	
L2-U2 W						Minimal pack rust between flange and upper gusset plate.
L2-U2 E		Bottom two batten plates on south face deteriorated with corrosion holes.		Laminar corrosion around splice plate inside of gusset L2.		
L3-U3 E					Pack rust with prying at gusset L3.	
L4-U4 W				Laminar corrosion inside of lower gusset.	Pack rust at interface with top gusset plate.	
L7-U7 W					Laminar corrosion between flange and lower gusset plate. Surface rust at connection to operator house support.	
L7-U7 E						
L8-U8 W			2"x6" corrosion hole in web splice plate inside of gusset at L8. Laminar corrosion around 50% of rivets in lower half of vertical.	2"x6" corrosion hole in web splice plate inside of gusset at L8. Laminar corrosion around 50% of rivets in lower half of vertical.		
L8-U8 E					Laminar corrosion on 20% of surface for full height.	Laminar corrosion on 20% of surface for full height.

Note: Members not listed and member components left blank are similar to the Typical Condition listed.

Sarah Mildred Long Bridge - Span 3
Bottom Chord

Member:	Rivet Head Condition	Lacing Bar/Batten Plate Condition	Structural Member Condition			
			Bottom flange	Top flange	Exterior Web	Interior Web
Typical Condition	Rivet heads on inside faces at Joints have up to 70% section loss. Less than 10% of rivets elsewhere have up to 20%	Surface rust on top batten plates and lacing bars..	Some surface rust on top face of horizontal legs. Laminar corrosion at joints.	Surface rust on top face, minor laminar corrosion at batten plate interfaces. Laminar corrosion at joints.	Surface rust on inside face at at joints. Isolated paint loss and surface rust on outside face.	Surface rust on inside face at at joints. Isolated paint loss on outside face and rust at less than 5% of rivet heads. Laminar corrosion at interface with gusset plates.
L2-L3 W		Pack rust between bottom flange and batten plate near L2.			Paint loss and surface rust at splice plate.	
L5-L6 E				Laminar corrosion at batten plate interface.		

Note: Members not listed and member components left blank are similar to the Typical Condition listed.

Sarah Mildred Long Bridge - Span 3

Top Chord

Member:	Rivet Head Condition	Lacing Bar/Batten Plate Condition	Structural Member Condition			
			Bottom flange	Top flange	Exterior Web	Interior Web
Typical Condition	Surface rust on some inside face rivet heads.	Surfce rust on topside of bottom lacing bars and batten plates.	Surface rust on inside face of both legs, both sides.	Minor paint scaling with some surface rust on inside face.	Minor paint scaling with some surface rust on inside face.	Minor paint scaling with some surface rust on inside face.
U0-U1 W					Pack rust with prying between web and bottom flange at U1.	
U0-U1 E						Pack rust with prying between web and bottom flange.
U2-U3 W		Pack rust with prying between batten plate and bottom chord at U3.				
U2-U3 E		Pack rust with prying between batten plate and bottom chord at U3.				
U3-U4 W					Laminar corrosion on inside face of web.	Laminar corrosion on inside face of web.
U3-U4 E		Pack rust with prying between batten plate and bottom chord at U3.				
U4-U5 E		Pack rust with prying between batten plate and bottom chord at U5.				
U5-U6 W		Pack rust with prying between batten plate and bottom chord at U5.				
U5-U6 E		Pack rust with prying between batten plate and bottom chord at U5.				
U7-U8 W					Pack rust is causing prying on bottom 3" of web over middle third of member.	
U7-U8 E		Pack rust with prying between batten plate and bottom chord at U7.				

Note: Members not listed and member components left blank are similar to the Typical Condition listed.

Sarah Mildred Long Bridge - Span 3

Diagonals

Member:	Rivet Head Condition	Lacing Bar/Batten Plate Condition	Structural Member Condition			
			Bottom flange	Top flange	Exterior Web	Interior Web
Typial Condition	Paint loss and surface rust on less than 30% of rivet heads.	Top lacing bars/batten plates rusted with laminar corrosion on less than 5% of area.	Surface rust on top side of flange.	Surface rust at lacing bar interface.	Some paint loss and surface rust - less than 10% of surface	Some paint loss and surface rust - less than 5% of surface
L2-U3 W		Pack rust between bottom flange and batten plate at U3.				
U7-L8 W		Laminar corrosion on top lacing bars over bottom 25' of the diagonal.				
U7-L8 E					Surface rust on entire web height for 6' from gusset L8. Spot surface rust on the rest of the web.	

Sarah Mildred Long Bridge - Span 3

Verticals

Member:	Rivet Head Condition	Lacing Bar/Batten Plate Condition	Structural Member Condition			
			North face of web	South face of web	Exterior Flange	Interior Flange
Typical Condition - Box shaped	Up to 20% section loss on less than 10% of rivet heads.	Surface rust on less than 10% of lacing bars. Surface rust on bottom batten plate.	Laminar corrosion at interface with splice plate inside of lower panel point. Minor paint scaling and rust inside of upper panel point.	Laminar corrosion at interface with splice plate inside of lower panel point. Minor paint scaling and rust inside of upper panel point.	Surface rust on less than 5% of surface area.	Pack rust between vertical and Roadyway Floorbeam knee brace at bottom of knee brace.
Typical Condition - I shaped	Rivet heads at splice plate inside of lower panel point have paint loss and surface rust.	N/A	Surface rust on less than 5% of surface area. Rusted around splice plate in area between lower gusset plates.	Surface rust on less than 5% of surface area. Rusted around splice plate in area between lower gusset plates.	Surface rust on less than 5% of surface area.	Pack rust between vertical and Roadyway Floorbeam knee brace at bottom of knee brace. Surface rust on less than 5% of surface area.
L0-U0 E		Laminar corrosion at lifting diagonal support.	Laminar corrosion inside of lower gusset.			
L2-U2 W		Laminar corrosion on lacing bars over bottom half of vertical.				
L5-U5 W					Pack rust between flange and lower gusset plate.	Pack rust between flange and lower gusset plate.
L6-U6 E			Laminar corrosion around splice plate at lower gusset.			
L8-U8 W		Laminar corrosion on batten plate at lifting diagonal. Lamianr corrosion on lacing bars.			Laminar corrosion at lifting diagaonal.	
L8-U8 E		Laminar corrosion on batten plate at lifting diagonal. Lamianr corrosion on lacing bars.			Laminar corrosion at lifting diagaonal.	

Note: Members not listed and member components left blank are similar to the Typical Condition listed.

Sarah Mildred Long Bridge - Span 4
Bottom Chord

Member:	Rivet Head Condition	Lacing Bar/Batten Plate Condition	Structural Member Condition			
			Bottom flange	Top flange	Exterior Web	Interior Web
Typical Condition	Rivet heads on inside faces at Joints have up to 70% section loss. Less than 10% of rivets elsewhere have up to 20%	Surface rust on top batten plates and lacing bars..	Some surface rust on top face of horizontal legs. Laminar corrosion at joints.	Surface rust on top face, minor laminar corrosion at batten plate interfaces. Laminar corrosion at joints.	Surface rust on inside face at at joints. Isolated paint loss and surface rust on outside face.	Surface rust on inside face at at joints. Isolated paint loss on outside face and rust at less than 5% of rivet heads. Laminar corrosion at interface with gusset plates.
L0-L1 W		Laminar corrosion throughout bottom lacing bars. Laminar corrosion on splice plate at L1. Steel angle connecting chord splice to vertical web has 100% section loss.				
L1-L2 W		Laminar corrosion throughout top and bottom lacing bars.		Laminar corrosion at lacing bar interface.		
L1-L2 E		Laminar corrosion throughout bottom lacing bars.				
L2-L3 W		Pack rust with prying at L3.				
L3-L4 W	Top flange rivet heads have 50% section loss throughout.	Bottom batten plate at L3 heavily deteriorated with corrosion holes. Top batten plates deteriorated throughout.			Surface rust on 20% of outside face. Laminar corrosion with prying on inside face at interface with flanges.	Laminar corrosion with prying on inside face at interface with flanges.
L3-L4 E					Laminar corrosion on inside face adjacent to L4.	
L5-L6 W				Pack rust with prying between exterior web and flange.		
L5-L6 E			Laminar corrosion over full width at batten plate.	Surface rust throughout. Laminar corrosion at batten plate interface.	Surface rust on 30% of surface.	
L6-L7 E			Laminar corrosion at batten plate.			
L7-L8 W				Surface rust full length. Laminar corrosion at gusset plate interface.	Pack rust with prying between top flange and web.	

Note: Members not listed and member components left blank are similar to the Typical Condition listed.

Sarah Mildred Long Bridge - Span 4

Top Chord

Member:	Rivet Head Condition	Lacing Bar/Batten Plate Condition	Structural Member Condition			
			Bottom flange	Top flange	Exterior Web	Interior Web
Typical Condition	Surface rust on some inside face rivet heads.	Surfce rust on topside of bottom lacing bars and batten plates.	Surface rust on inside face of both legs, both sides.	Minor paint scaling with some surface rust on inside face.	Minor paint scaling with some surface rust on inside face.	Minor paint scaling with some surface rust on inside face.
U0-U1 W				Pack rust on top flange adjacent to U0.	Pack rust with prying between bottom flange and web for full length.	Pack rust with prying between bottom flange and web for full length.
U0-U1 E					Pack rust with prying between bottom flange and web for full length.	Pack rust with prying between bottom flange and web for full length.
U2-U3 W					Additional hole drilled for barrier support connection.	
U2-U3 E						Pack rust between splice plate and web at U3.
U3-U4 W						Pack rust between splice plate and web at U3.
U3-U4 E					Pack rust on splice plate at U3.	
U4-U5 E						Pack rust with prying between web and splice plate at U5.
U5-U6 W		Pack rust and prying between bottom flange and batten plate at U5.				
U7-U8 W		Pack rust and prying between bottom flange and batten plate at U7.			Pack rust with prying between bottom flange and web.	
U7-U8 E		Pack rust and prying between bottom flange and batten plate at U8.			Pack rust between web and bottom flange with prying over full width.	Pack rust between web and bottom flange with prying over full width.

Note: Members not listed and member components left blank are similar to the Typical Condition listed.

Sarah Mildred Long Bridge - Span 4

Diagonals

Member:	Rivet Head Condition	Lacing Bar/Batten Plate Condition	Structural Member Condition			
			Bottom flange	Top flange	Exterior Web	Interior Web
Typial Condition	Paint loss and surface rust on less than 30% of rivet heads.	Top lacing bars/batten plates rusted with laminar corrosion on less than 5% of area.	Surface rust on top side of flange.	Surface rust at lacing bar interface.	Some paint loss and surface rust - less than 10% of surface	Some paint loss and surface rust - less than 5% of surface
U1-L2 W					Some paint loss and surface rust on 20% of surface area.	
U3-L4 W		Bottom batten plate at L4 deteriorated with corrosion holes. Top lacing bars have laminar corrosion throughout.			Laminar corrosion on end 3' of diagonal at L4.	
U3-L4 E		Laminar corrosion on top lacing bars, full length.				
U5-L6 W		Pack rust with prying between bottom flange and batten plate at midspan.				
U7-L8 W		Bottom batten plates and lacing bars are rusted throughout.			Laminar corrosion on inside face at L8. Pack rust between web and bottom flange over 8" length from gusset L8.	Laminar corrosion on inside face at L8.
U7-L8 E		Bottom batten plates and lacing bars are rusted throughout.				

Note: Members not listed and member components left blank are similar to the Typical Condition listed.

Sarah Mildred Long Bridge - Span 4

Verticals

Member:	Rivet Head Condition	Lacing Bar/Batten Plate Condition	Structural Member Condition			
			North face of web	South face of web	Exterior Flange	Interior Flange
Typical Condition - Box shaped	Up to 20% section loss on less than 10% of rivet heads.	Surface rust on less than 10% of lacing bars. Surface rust on bottom batten plate.	Laminar corrosion at interface with splice plate inside of lower panel point. Minor paint scaling and rust inside of upper panel point.	Laminar corrosion at interface with splice plate inside of lower panel point. Minor paint scaling and rust inside of upper panel point.	Surface rust on less than 5% of surface area.	Pack rust between vertical and Roadyway Floorbeam knee brace at bottom of knee brace.
Typical Condition - I shaped	Rivet heads at splice plate inside of lower panel point have paint loss and surface rust.	N/A	Surface rust on less than 5% of surface area. Rusted around splice plate in area between lower gusset plates.	Surface rust on less than 5% of surface area. Rusted around splice plate in area between lower gusset plates.	Surface rust on less than 5% of surface area.	Pack rust between vertical and Roadyway Floorbeam knee brace at bottom of knee brace. Surface rust on less than 5% of surface area.
L1-U1 W					Pack rust between flange and gusset plate at L1.	
L3-U3 W					Laminar corrosion at gusset L3 interface. Pack rust between flange and gusset plate.	
L3-U3 E					Isolated laminar corrosion in 6"x6" area.	
L4-U4 W					Laminar corrosion on bottom 12" at L4. Pack rust with prying at U4.	
L5-U5 W					Pack rust with prying between flange and gusset late at L5.	
L8-U8 E					Pack rust with prying between flange and gusset late at U8.	

Note: Members not listed and member components left blank are similar to the Typical Condition listed.

Sarah Mildred Long Bridge - Span 5
Bottom Chord

Member:	Rivet Head Condition	Lacing Bar/Batten Plate Condition	Structural Member Condition			
			Bottom flange	Top flange	Exterior Web	Interior Web
Typical Condition	Rivet heads on inside faces at Joints have up to 70% section loss. Less than 10% of rivets elsewhere have up to 20%	Surface rust on top batten plates and lacing bars..	Some surface rust on top face of horizontal legs. Laminar corrosion at joints.	Surface rust on top face, minor laminar corrosion at batten plate interfaces. Laminar corrosion at joints. Power line supports welded to top flange.	Surface rust on inside face at at joints. Isolated paint loss and surface rust on outside face.	Surface rust on inside face at at joints. Isolated paint loss on outside face and rust at less than 5% of rivet heads. Laminar corrosion at interface with gusset plates.
L0-L1 W		Laminar corrosion on batten plate at L0, with rivet head section loss.			Laminar corrosion at interface with gusset L0. Laminar corrosion on less than 10% of web area.	
L0-L1 E		Laminar corrosion on batten plates.				
L1-L2 W		Laminar corrosion on top and bottom batten plates at L1.				
L1-L2 E		Laminar corrosion on top batten plates at L1.	Laminar corrosion on top face at gusset.		Surface rust on 30% of surface area.	
L2-L3 W		Pack rust with prying between splice plate and top flange as well as bottom flange.	Laminar corrosion at batten plates.			
L2-L3 E		Pack rust with prying between splice plate and top flange.		Pack rust at splice plate.		
L3-L4 W		Laminar corrosion with up to 100% section loss in four bottom batten plates and three top batten plates	Laminar corrosion over full length.	Laminar corrosion at batten plates.	Surface rust on 10% of surface.	
L5-L6 W			Pack rust between bottom splice plate and bottom flange.			
L5-L6 E				Laminar corrosion and prying between flange and batten plate.	Surface rust on 20% of surface at splice plate.	
L7-L8 W		Toip and bottom batten plates at L7 deteriorated.			Laminar corrosion at several rivets and at interface with gusset L8.	
L7-L8 E		Laminar corrosion on batten plates throughout.	Laminar corrosion on top face.		Surface rust on 30% of surface throughout.	

Note: Members not listed and member components left blank are similar to the Typical Condition listed.

Sarah Mildred Long Bridge - Span 5

Top Chord

Member:	Rivet Head Condition	Lacing Bar/Batten Plate Condition	Structural Member Condition			
			Bottom flange	Top flange	Exterior Web	Interior Web
Typical Condition	Surface rust on some inside face rivet heads.	Surfce rust on topside of bottom lacing bars and batten plates.	Surface rust on inside face of both legs, both sides.	Minor paint scaling with some surface rust on inside face.	Minor paint scaling with some surface rust on inside face.	Minor paint scaling with some surface rust on inside face.
U0-U1 W			Pack rust with prying between splice plate and bottom flange.		Pack rust with prying between web and bottom flange.	
U2-U3 W		Pack rust between batten plate and bottom flange at U3.				
U3-U4 W						Minor pack rust between web and bottom flange.
U3-U4 E					Pack rust with prying between web and splice plate at U3.	
U4-U5 W						Minor pack rust between web and bottom flange.
U4-U5 E					Pack rust between web and bottom flange.	
U5-U6 W		Laminar corrosion between batten plate and bottom flange at U5.				
U7-U8 E		Laminar corrosion on batten plates throughout.			Pack rust with prying between web and bottom flange.	

Note: Members not listed and member components left blank are similar to the Typical Condition listed.

Sarah Mildred Long Bridge - Span 5

Diagonals

Member:	Rivet Head Condition	Lacing Bar/Batten Plate Condition	Structural Member Condition			
			Bottom flange	Top flange	Exterior Web	Interior Web
Typial Condition	Paint loss and surface rust on less than 30% of rivet heads.	Top lacing bars/batten plates rusted with laminar corrosion on less than 5% of area.	Surface rust on top side of flange.	Surface rust at lacing bar interface.	Some paint loss and surface rust - less than 10% of surface	Some paint loss and surface rust - less than 5% of surface
L0-U1 W		Pack rust with prying between bottom flange and bottom flange.			Laminar corrosion on inside face at L0. Laminar corrosion at rivets over 2' from L0.	Laminar corrosion on inside face at L0.
L0-U1 E		Top batten plate at L0 corroded with corrosion holes.			Laminar corrosion at interface with gusset L0.	
U3-L4 W		Laminar corrosion on top lacing bars. Laminar corrosion on bottom lacing bars and batten plate adjacent to L4.			Pack rust between web plate and splice plate at U3. Laminar corrosion on less than 5% of surface area.	Pack rust between web plate and splice plate at U3.
L6-U7 E		Laminar corrosion on batten plate at L6.				
U7-L8 W					Pack rust between web and barrier support connection.	

Note: Members not listed and member components left blank are similar to the Typical Condition listed.

Sarah Mildred Long Bridge - Span 5

Verticals

Member:	Rivet Head Condition	Lacing Bar/Batten Plate Condition	Structural Member Condition			
			North face of web	South face of web	Exterior Flange	Interior Flange
Typical Condition - Box shaped	Up to 20% section loss on less than 10% of rivet heads.	Surface rust on less than 10% of lacing bars. Surface rust on bottom batten plate.	Laminar corrosion at interface with splice plate inside of lower panel point. Minor paint scaling and rust inside of upper panel point.	Laminar corrosion at interface with splice plate inside of lower panel point. Minor paint scaling and rust inside of upper panel point.	Surface rust on less than 5% of surface area.	Pack rust between vertical and Roadyway Floorbeam knee brace at bottom of knee brace.
Typical Condition - I shaped	Rivet heads at splice plate inside of lower panel point have paint loss and surface rust.	N/A	Surface rust on less than 5% of surface area. Rusted around splice plate in area between lower gusset plates.	Surface rust on less than 5% of surface area. Rusted around splice plate in area between lower gusset plates.	Surface rust on less than 5% of surface area.	Pack rust between vertical and Roadyway Floorbeam knee brace at bottom of knee brace. Surface rust on less than 5% of surface area.
L0-U0 W		Two bottom batten plates are deteriorated with corrosion holes.			Laminar corrosion on 10% of surface.	
L0-U0 E					Laminar corrosion at interface with lower gusset plate.	
L1-U1 W					Pack rust with prying between flange and upper gusset plate. Laminar corrosion at interface with lower gusset plate.	
L2-U2 W						Pack rust with prying between flange and gusset L1.
L3-U3 W					Laminar corrosion at gusset L3 interface.	
L4-U4 W		Laminar corrosion on batten plate at L4.				
L4-U4 E		Laminar corrosion on batten plate at L4.			3"x1" hole on web at L4. Area around hole has 50% section loss - 4"x2".	
L6-U6 W		Pack rust between lacing bars and flange. Laminar corrosion on batten plate at L6.				
L6-U6 E		Pack rust between batten plate and bottom flange.				
L7-U7 W		One lacing bar removed.			Pack rust with prying at lower gusset plate.	Pack rust with prying at lower gusset plate.
L8-U8 E		Top batten plate distorted due to pack rust.				

Note: Members not listed and member components left blank are similar to the Typical Condition listed.

Section B:

Gusset Plate Condition

Legend:

SR – Pitting

Lam Corr – Laminar Corrosion

Project: SM Long Bridge	Computed: JFM	Date: 7-20-09	
Subject: Gusset PL's	Checked:	Date:	
Task:	Page: 1	of: 17	
Job #:	No:		

HDR | ONE COMPANY *Many Solutions*℠

Sarah Long Bridge

Gusset L0 and L8 deterioration - Fixed Truss Spans

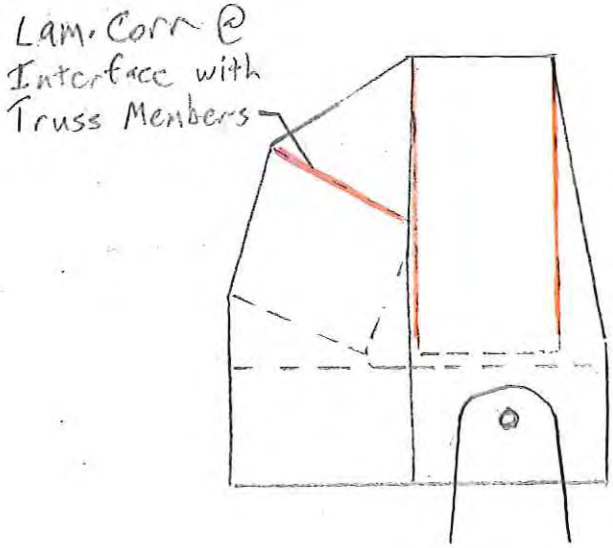

Minor Laminar Corrosion on Gusset surface. See below for % of surface area

Exterior Gusset Plate
Spans 1, 2, 4, 5
(Interior similar)

10% of surface area - minor Lam Corr:
Span 1: all L0/L8
Span 2: L0E, L8W, L8E
Span 3: L0W, L0E, L8E
Span 5: L0E

20% of surface area - minor Lam Corr:
Span 2: L0W
Span 4: L8W
Span 5 L0W, L8W, L8E

Sarah Long Bridge

Gusset L0 and L8 deterioration - Lift Span

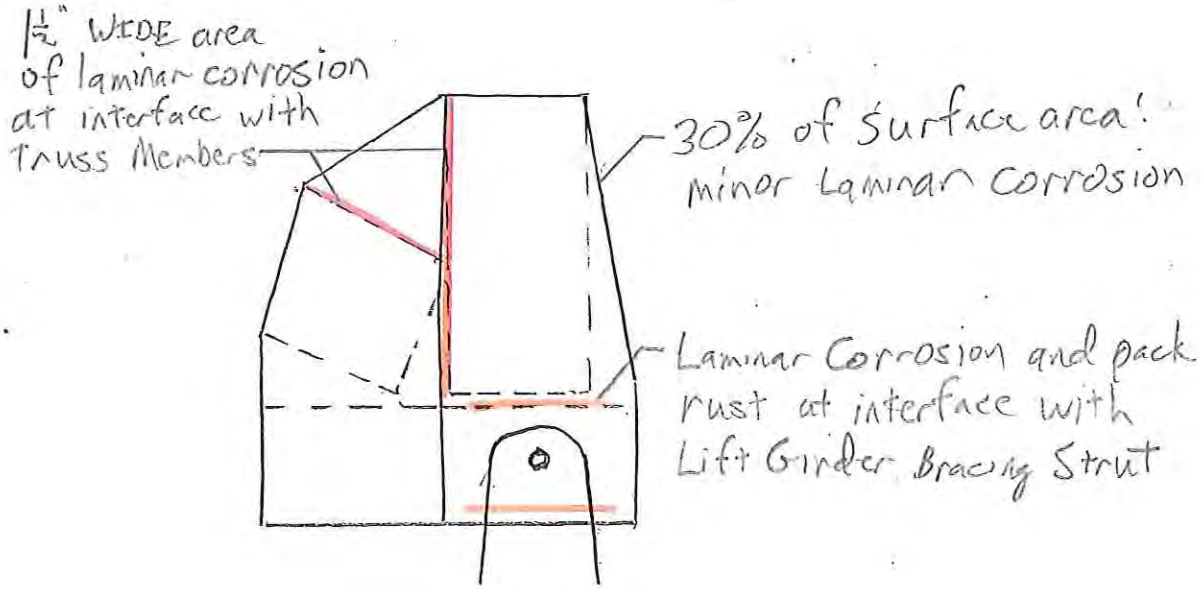

Span 3, L0/L8
Exterior Gusset

Interior Gussets similar except for corrosion at Lift Girder Bracing Strut.

Sarah Long Bridge

Spans 1, 3, 5 - U0/U8 ; Span 2 - U0; Span 4 - U8

Note: Exterior Plates Shown. Interior is similar, but less severe condition.

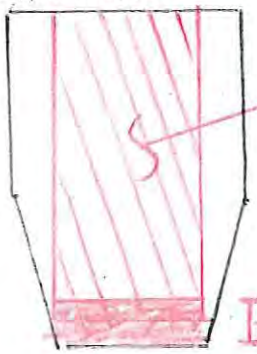

Span 1 - U0E; Span 4 - U8W, U0W

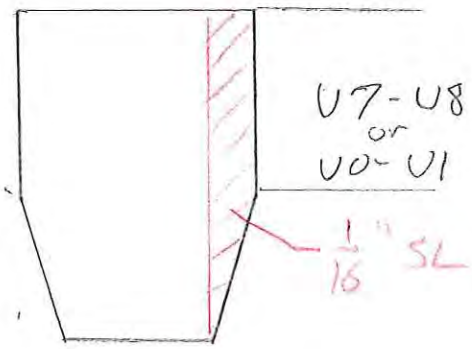

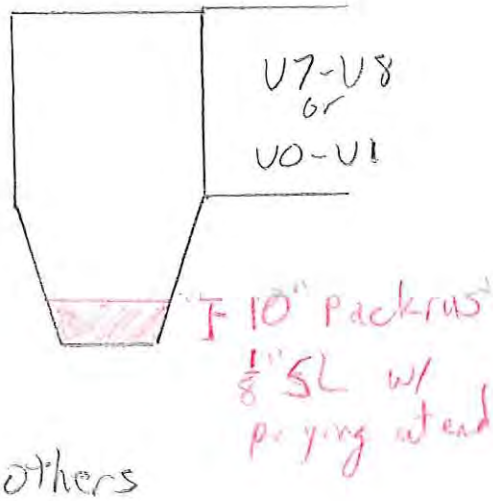

Span 1 - U0W, U8E
Span 2 - U0E
Span 4 - U8W
Span 5 - U0W, U8E

All others

Project: SM Long Bridge	Computed: JFM	Date: 7-28-09	
Subject: Gusset PL's	Checked:	Date:	
Task:	Page: 4	of: 17	
Job #:	No:		

HDR | ONE COMPANY *Many Solutions*™

Sarah Long Bridge

Gusset Span 2, L8 and Span 4, L0 - "Half Truss at Tower Cols. - Fixed Span"

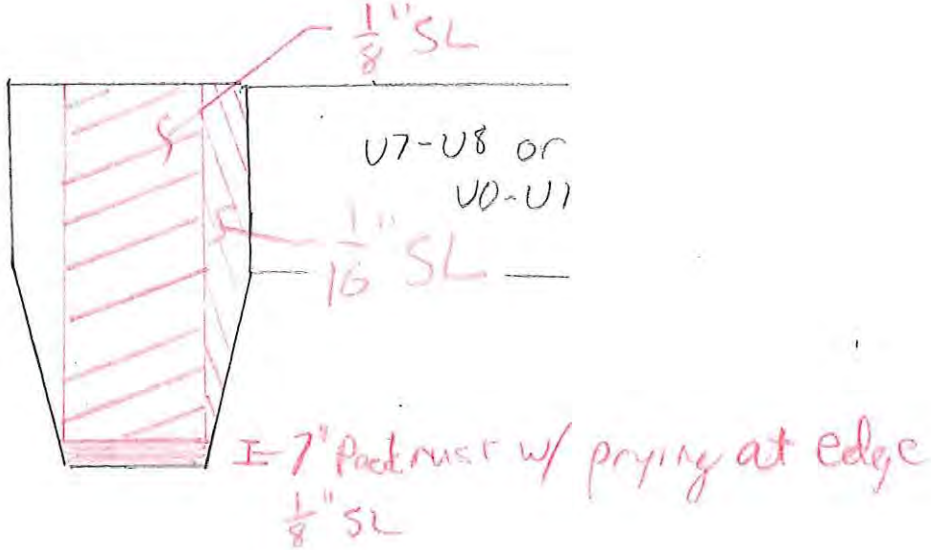

Note: Exterior Shown. Interior Similar, but in less severe condition

Project: SM Long Bridge	Computed: JFM	Date: 7-18-09	
Subject: Gusset PL's	Checked:	Date:	
Task:	Page: 5	of: 17	
Job #:	No:		

HDR | ONE COMPANY *Many Solutions*™

Sarah Long Bridge

Interior Gusset Plate Deterioration

Typical all lower gussets from L1 to L7

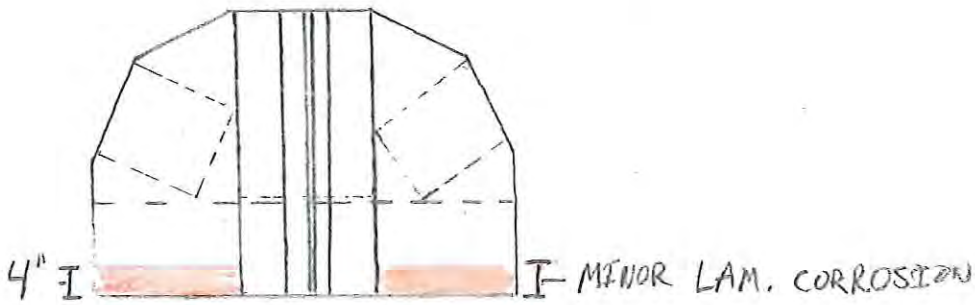

L2, L4, L6

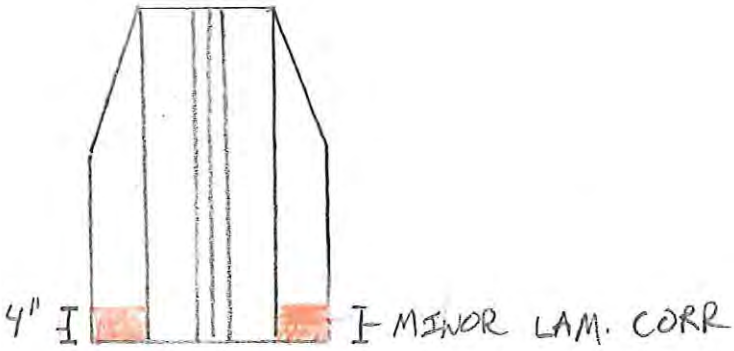

L1, L3, L5, L7

Sarah Long Bridge

Interior Gusset Plate Deterioration

Typical all upper gussets from U1 to U7

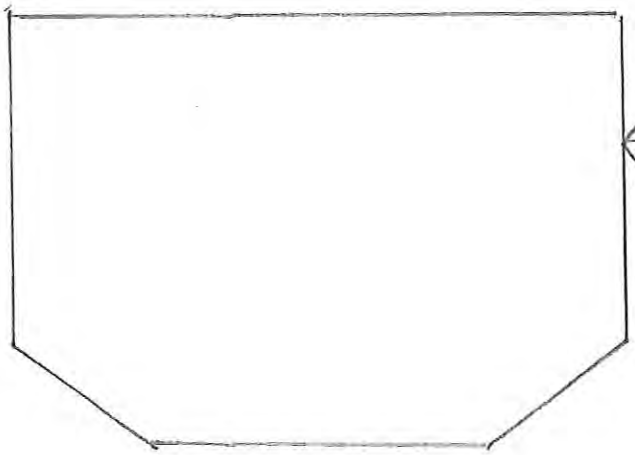

Plate satisfactory with paint fraying and spot rust on inside face

U1, U3, U5, U7

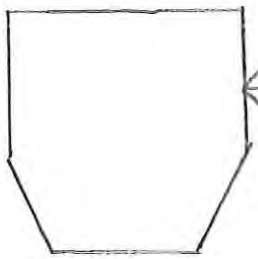

Plate satisfactory with paint fraying and spot rust on inside face

U2, U4, U6

Notes

Gusset U7 East on Span 3 has less that 0.5 sf. of surface rust on outside face

Gusset U7 East on Span 4 has laminar corrosion at interface with Roadway Floorbeam knee brace

Sarah Long Bridge - Exterior Gusset Plates

Gusset L1 Deterioration

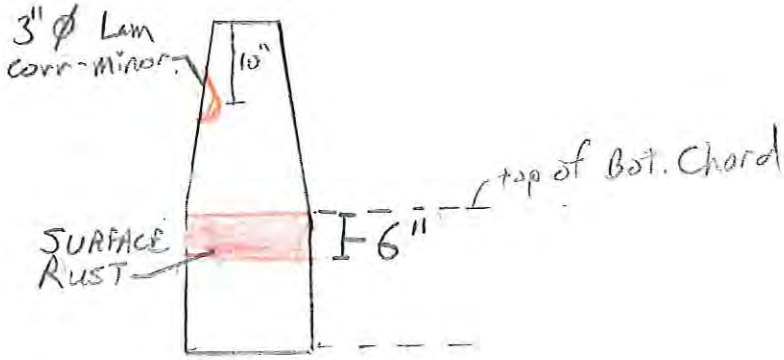

1E, 1W, 2E, 5W, 4W

Note:

Gusset L1 at other trusses are in generally satisfactory condition

Sarah Long Bridge - Exterior Gusset Plates

Gusset L2 Deterioration

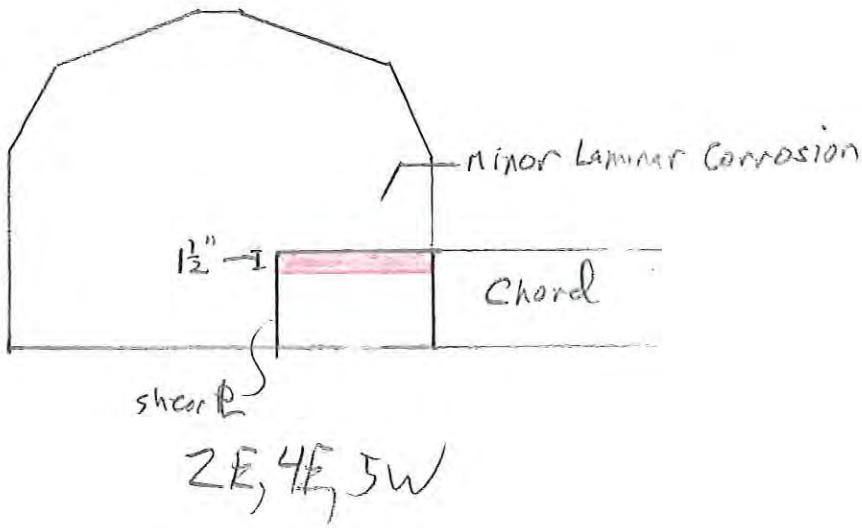

2E, 4E, 5W

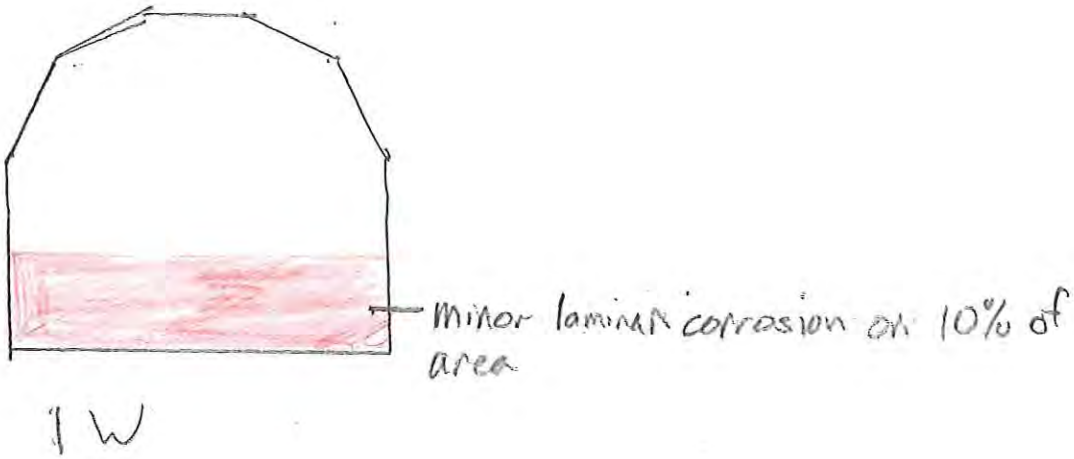

1W

Note:

Gusset L2 at other trusses are in generally satisfactory condition.

Sarah Long Bridge - Exterior Gusset Plate
Gusset L3 Deterioration

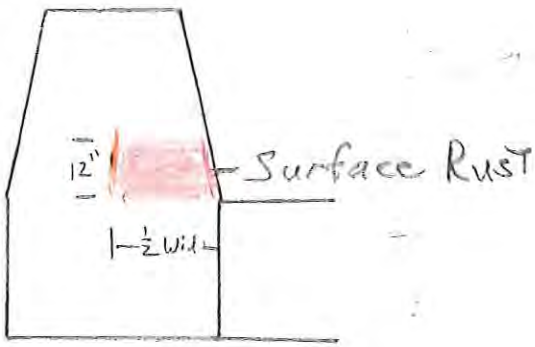

1W, 1E, 3E, 4W, 4E, 5W

Note:

Gusset L3 at other trusses are in generally good condition.

Sarah Long Bridge - Exterior Gusset Plate

L4 Deterioration

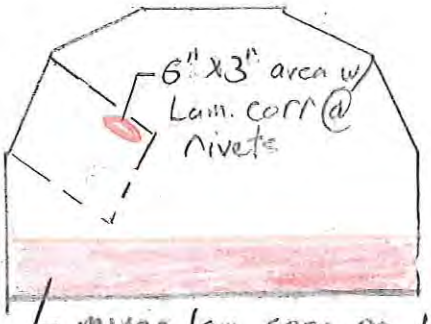

minor lam corr on 10% of area

1W

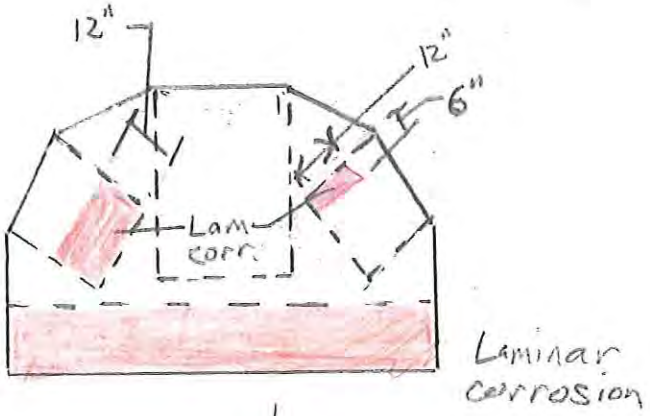

2W

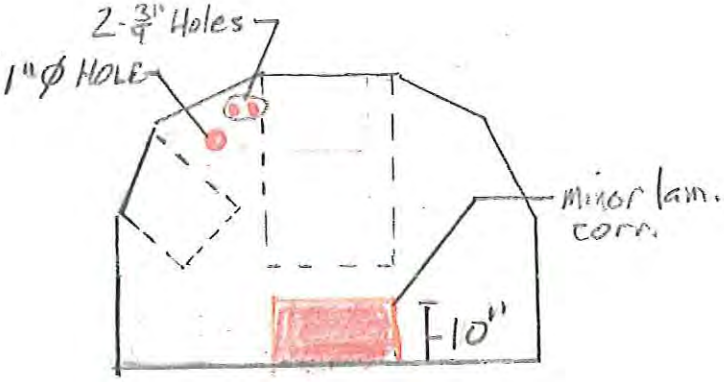

Holes are drilled for conduit connection.

3E, 3W

Note:

Gusset L4 at other trusses are in generally satisfactory Condition.

Sarah Long Bridge - Exterior Gusset Plate

Gusset U1 Deterioration

Span 1 E. 1

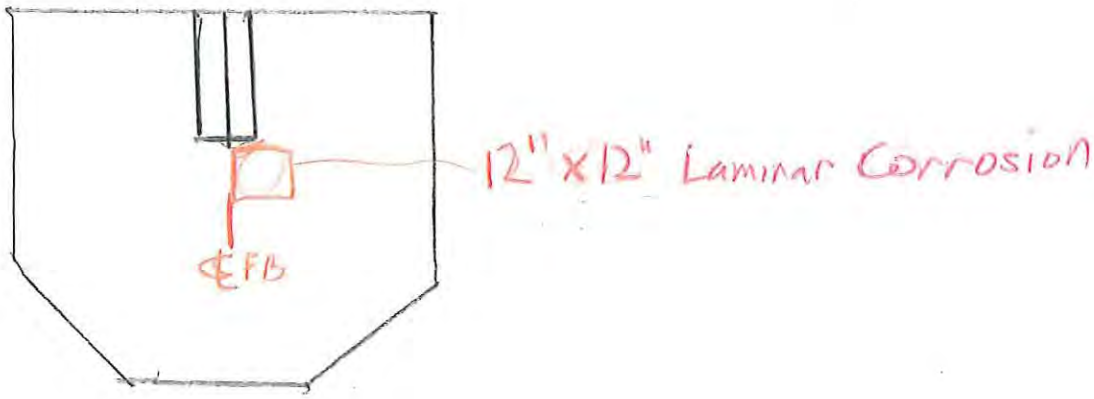

All others:

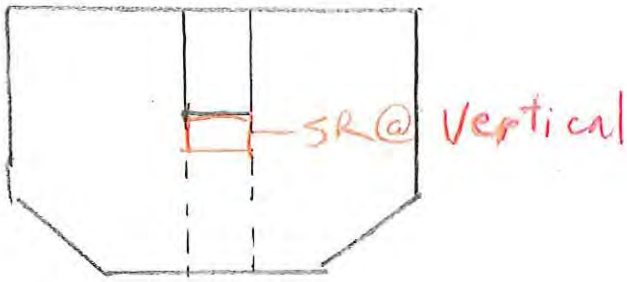

Project: SM Long Bridge	Computed: JFM	Date: 7-18-07	
Subject: Gusset Pl's	Checked:	Date:	
Task:	Page: 12	of: 17	
Job #:	No:		

HDR | ONE COMPANY *Many Solutions*™

Sarah Long Bridge - Exterior Gusset Plate

Gusset L6 Deterioration

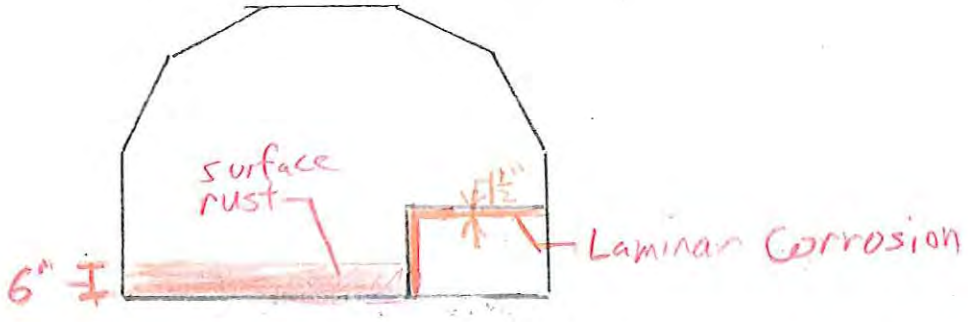

1E, 1W, 2E, 3W, 3E, 4W, 4E, 5E, 5W

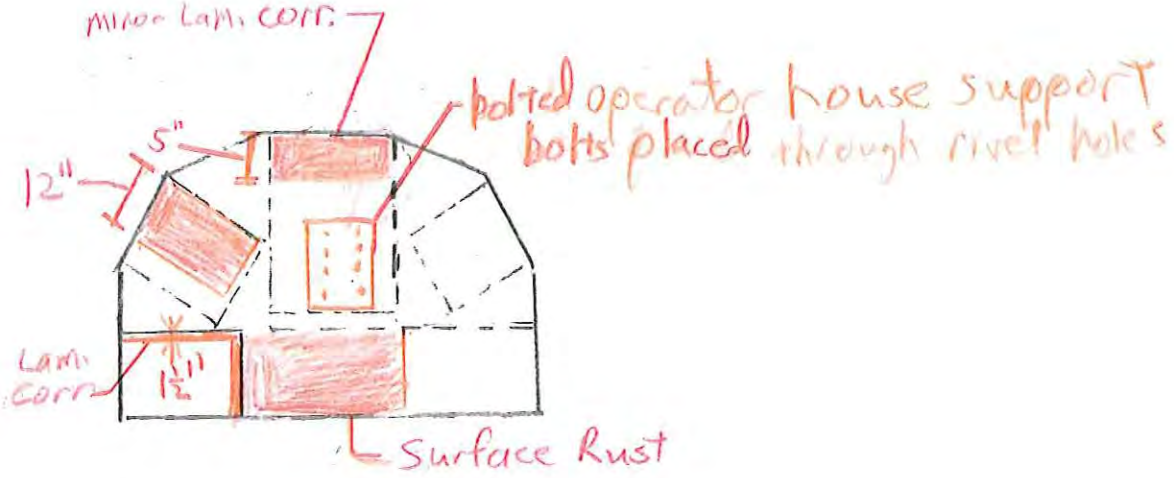

2W

Sarah Long Bridge - Exterior Gusset Plate

Gusset L5 and L7 deterioration

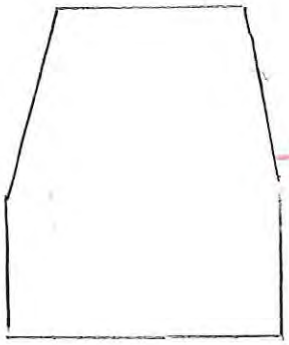

L5: 1E, 5E

L7: 1E, 4E, 5W, 5E

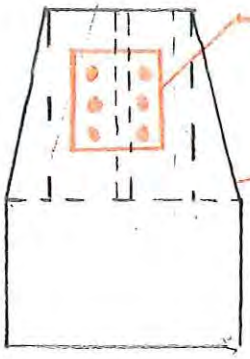

L7: 2W

Note

Gussets L5 and L7 at other trusses are in generally satisfactory condition.

Sarah Long Bridge - Exterior Gusset Plate

Gusset U5 Deterioration

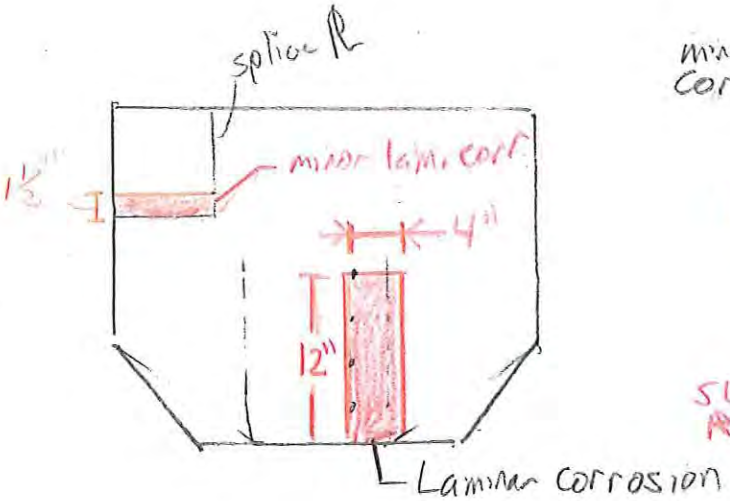

2E, 3E, 3W

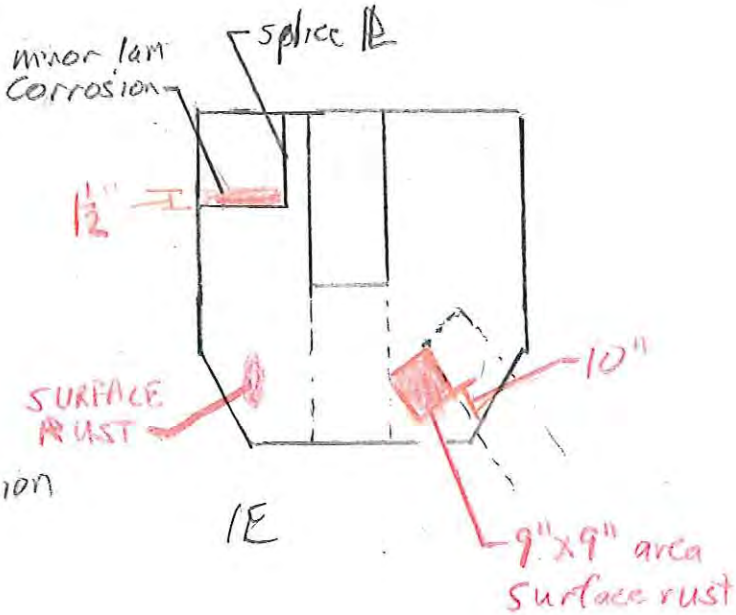

1E

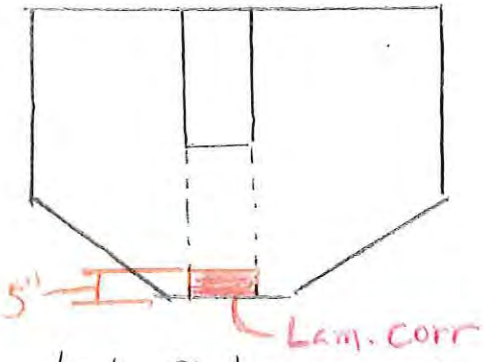

1W, 5W, 5E

Note:

Gusset U5 at other trusses are in generally satisfactory condition.

Project: SM Long Bridge	Computed: JTM	Date: 7-18-09	
Subject: Gusset PL's	Checked:	Date:	
Task:	Page: 15	of:	
Job #:	No:		

HDR | ONE COMPANY Many Solutions℠

Sarah Long Bridge - Exterior Gusset Plate

Gusset U7 deterioration

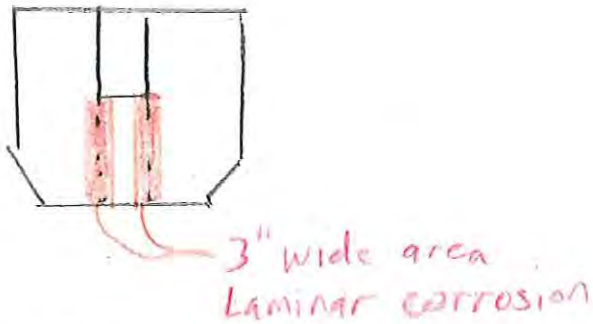

3E, 3W

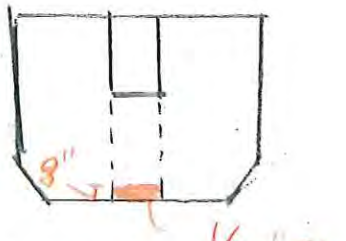

2W, 1E

Note:

Gusset U7 at other trusses are in generally satisfactory condition

Sarah Long Bridge - Exterior Gusset Plate

Gusset U2, U4, U6 Deterioration

All others

3W-U2

Project: SM Long Bridge	Computed: JFM	Date: 7-18-09	
Subject: Gusset PL's	Checked:	Date:	
Task:	Page: 17	of: 17	
Job #:	No:		

Sarah Long Bridge - Exterior Gusset Plate

Gusset U3 Deterioration

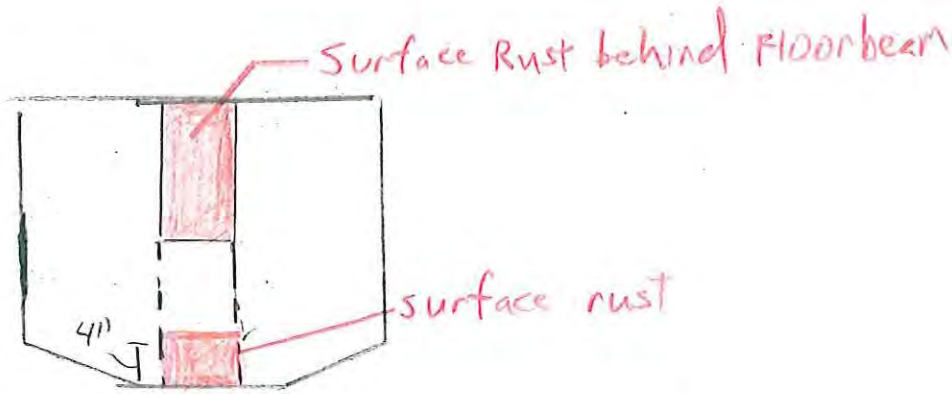

1E, 2E, 2W, 4W, 3W, 5W, 1W, 3E, 5E

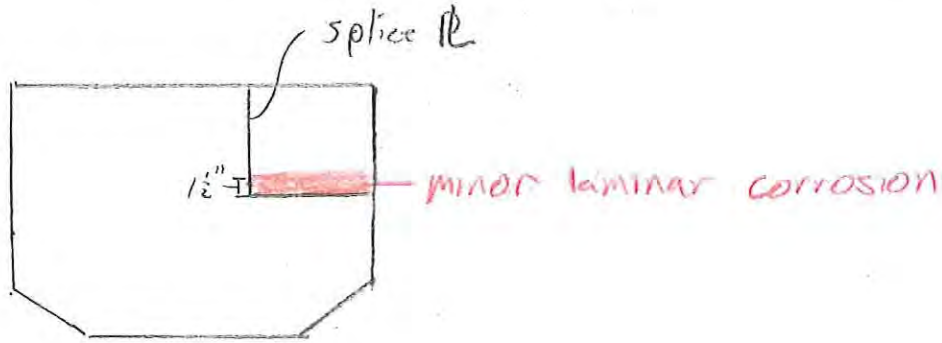

4E

Notes

Gusset U3 at span 1 East has laminar corrosion at edges.

Section C:

Typical Stringer Condition

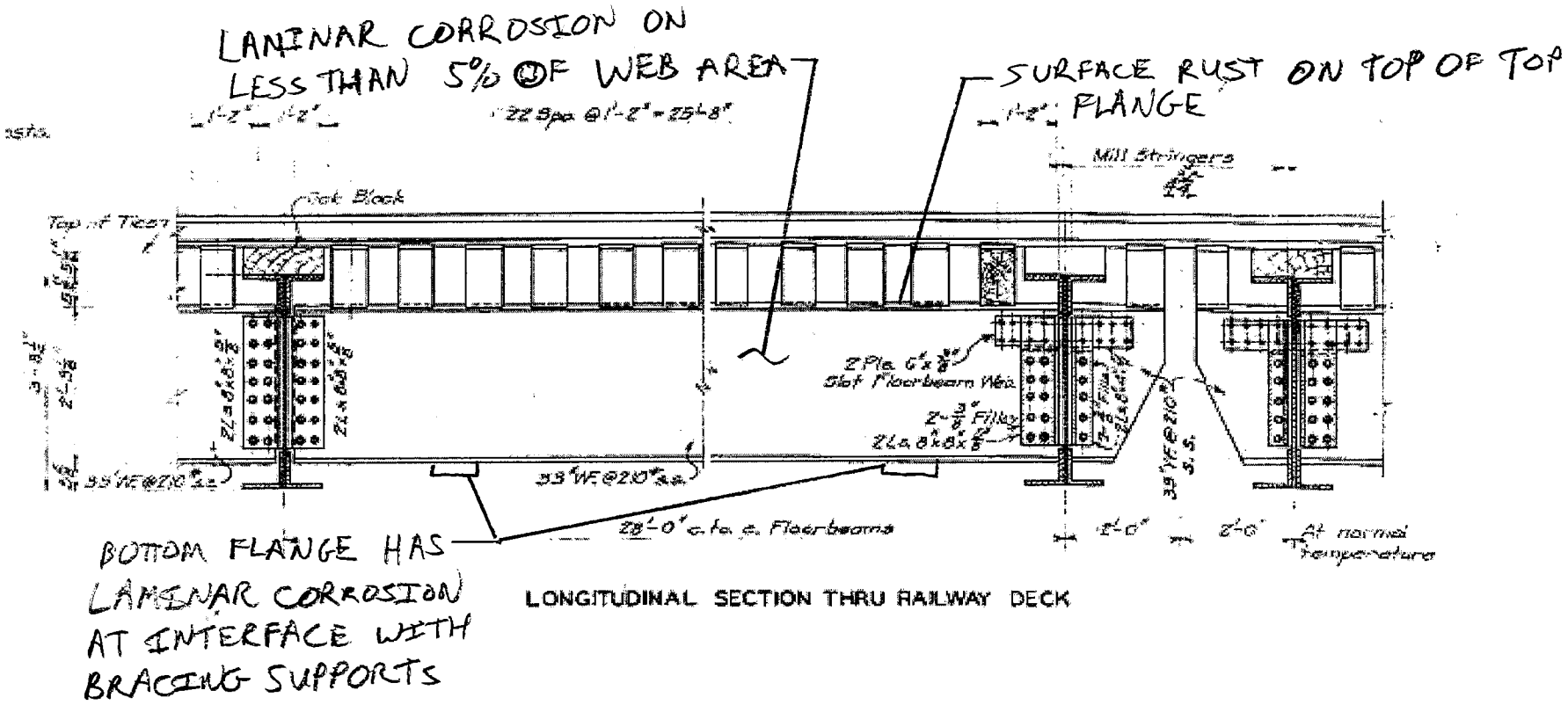

LONGITUDINAL SECTION THRU RAILWAY DECK

Typical Railroad Deck Stringer

Section D:

Typical Floorbeam Condition

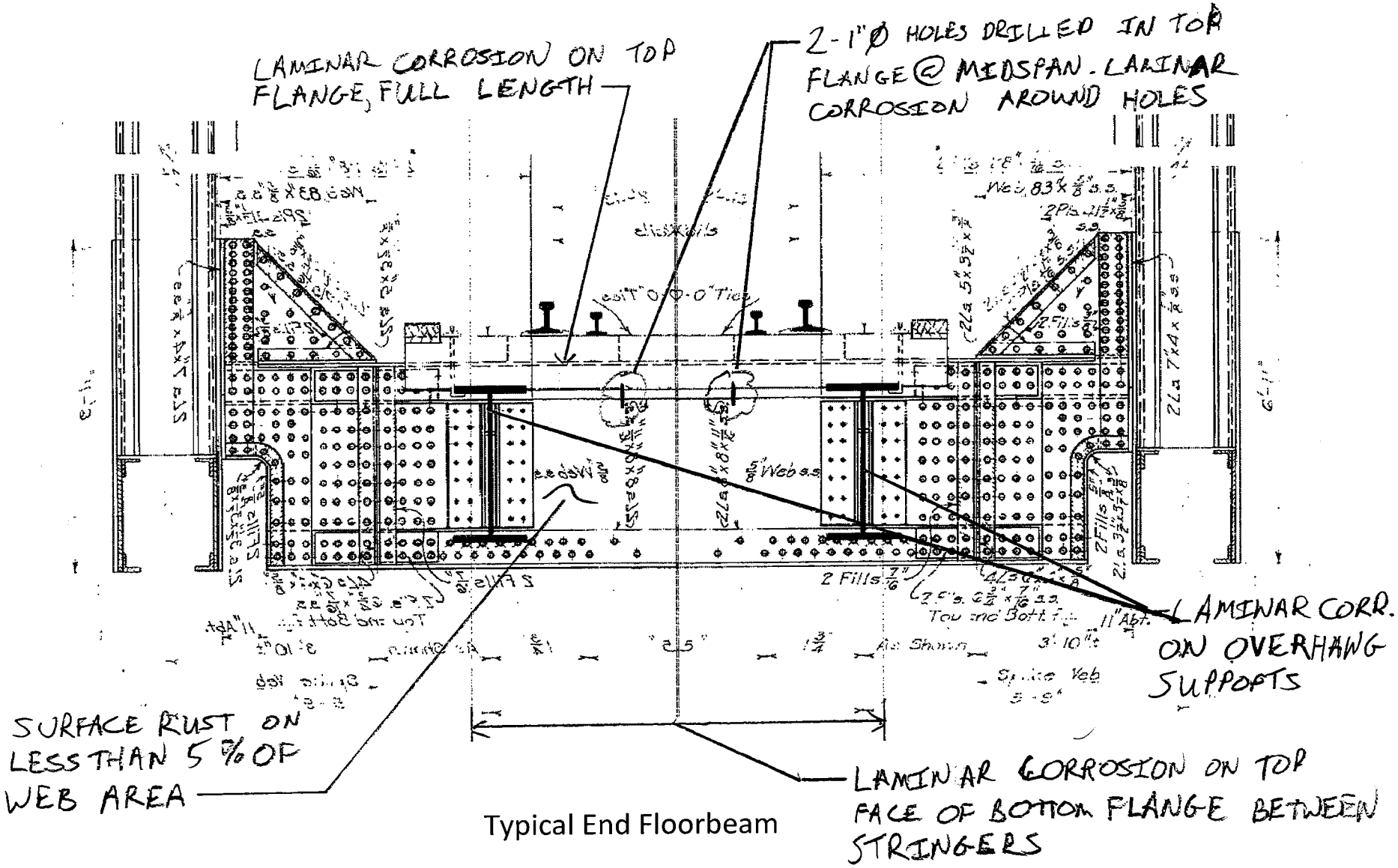

Typical End Floorbeam

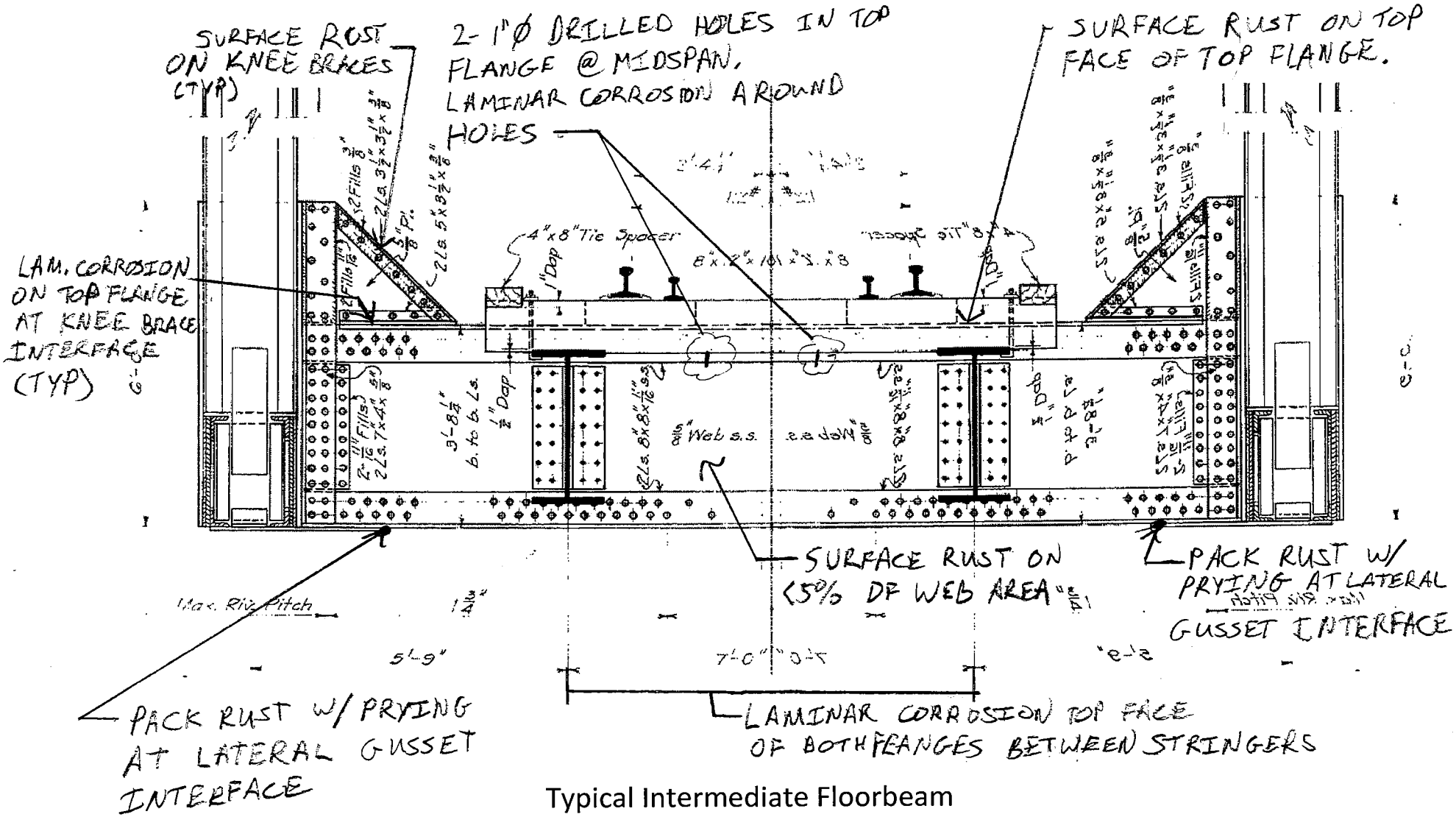

Typical Intermediate Floorbeam

Appendix C

Part II: Approach Spans

Section A:

Girder Condition

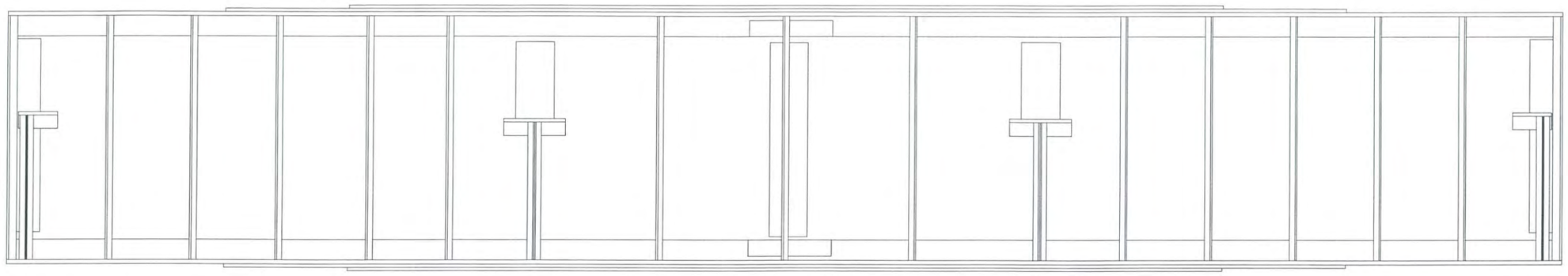

EAST ELEVATION
(LOOKING WEST)

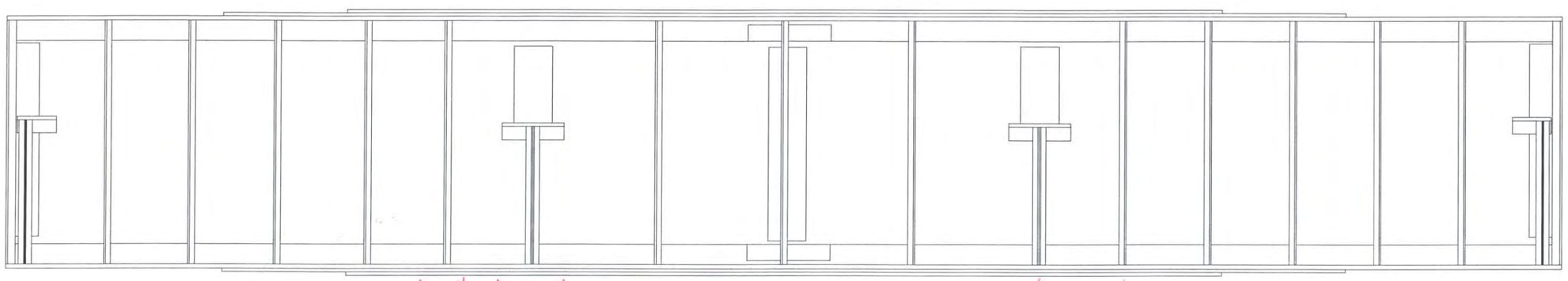

WEST ELEVATION
(LOOKING EAST)

Hoyle, Tanner Associates, Inc.
Consulting Engineers
150 Dow Street,
Manchester, NH 03101-1227
Tel 603-669-5555, Fax 603-669-4168
Web Page: www.hoyletanner.com
© Copyright 2009

SARAH LONG BRIDGE

SPAN 1 WEST GIRDER ELEVATION

INSPECTED BY: JB	DATE: 6-5-2009	SCALE: 3/16" = 1'-0" H
& EGW		3/8" = 1'-0" V

EAST ELEVATION
(LOOKING WEST)

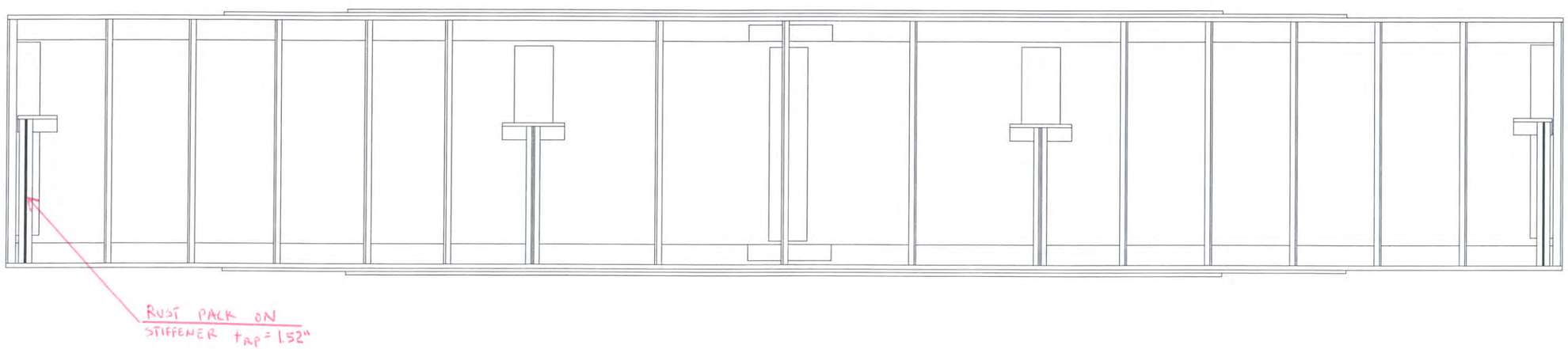

WEST ELEVATION
(LOOKING EAST)

Hoyle, Tanner Associates, Inc.
Consulting Engineers
150 Dow Street,
Manchester, NH 03101-1227
Tel 603-669-5555, Fax 603-669-4168
Web Page: www.hoyletanner.com
© Copyright 2009

SARAH LONG BRIDGE
SPAN 2 WEST GIRDER ELEVATION

INSPECTED BY: JB & EGW	DATE: 6-5-2009	SCALE: 3/16" = 1'-0" H 3/8" = 1'-0" V

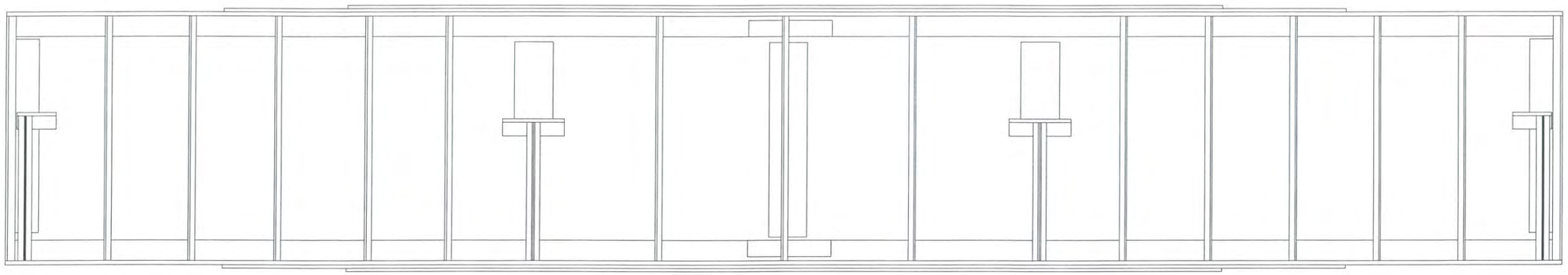

WEST ELEVATION
(LOOKING EAST)

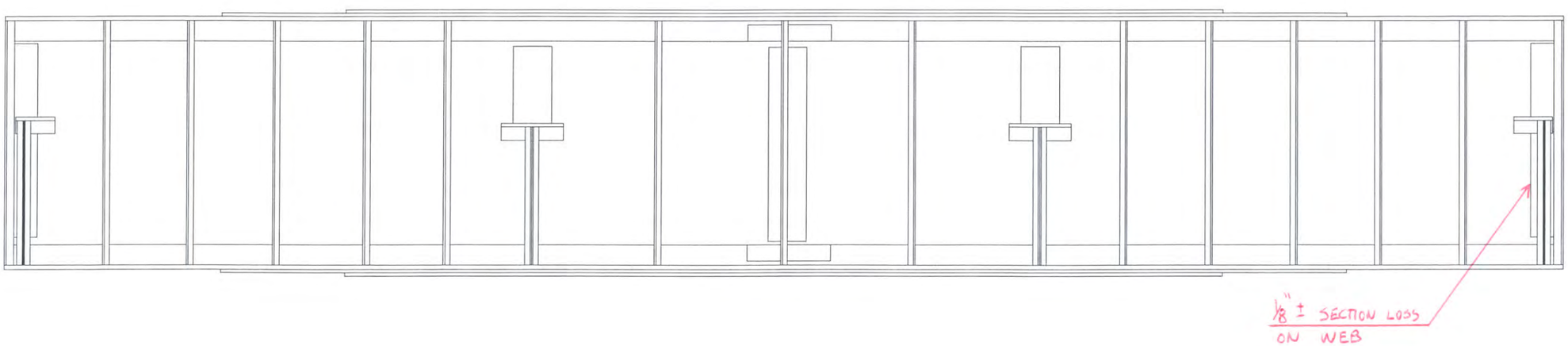

EAST ELEVATION
(LOOKING WEST)

Hoyle, Tanner Associates, Inc.
Consulting Engineers

150 Dow Street.
Manchester, NH 03101-1227
Tel 603-669-5555, Fax 603-669-4168
Web Page: www.hoyletanner.com
© Copyright 2009

SARAH LONG BRIDGE
SPAN 2 EAST GIRDER ELEVATION

INSPECTED BY: JB & EGW	DATE: 3-23-2009	SCALE: 3/16" = 1'-0" H 3/8" = 1'-0" V

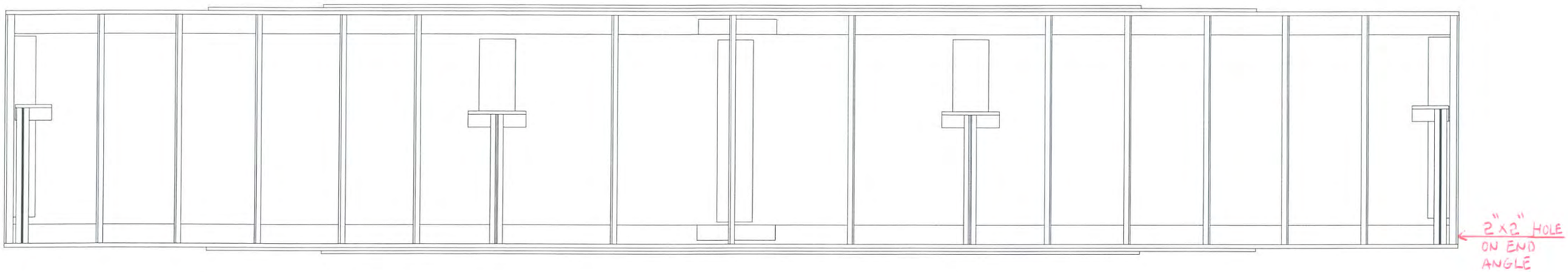

EAST ELEVATION
(LOOKING WEST)

WEST ELEVATION
(LOOKING EAST)

Hoyle, Tanner Associates, Inc.
Consulting Engineers

150 Dow Street,
Manchester, NH 03101-1227
Tel 603-669-5555, Fax 603-669-4168
Web Page: www.hoyletanner.com
© Copyright 2009

SARAH LONG BRIDGE
SPAN 3 WEST GIRDER ELEVATION

INSPECTED BY: JB & EGW	DATE: 6-5-2009	SCALE: 3/16" = 1'-0" H 3/8" = 1'-0" V

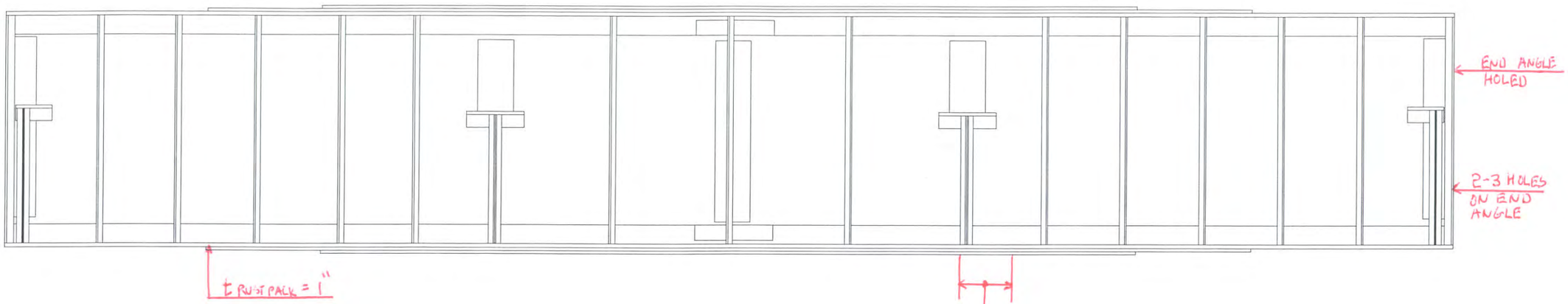

WEST ELEVATION
(LOOKING EAST)

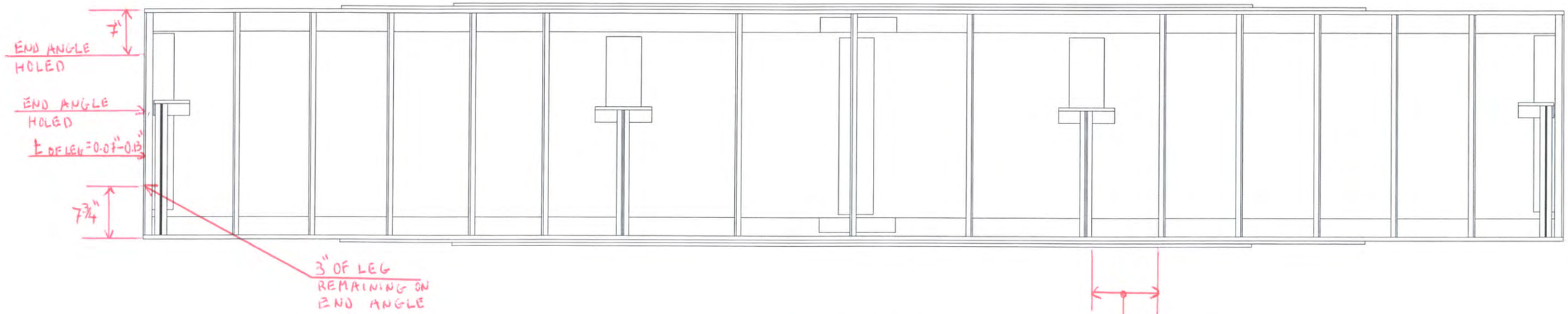

EAST ELEVATION
(LOOKING WEST)

Hoyle, Tanner Associates, Inc.
Consulting Engineers
150 Dow Street
Manchester, NH 03101-1227
Tel 603-669-5555, Fax 603-669-4168
Web Page: www.hoyletanner.com
© Copyright 2009

SARAH LONG BRIDGE
SPAN 4 WEST GIRDER ELEVATION

INSPECTED BY: JB	DATE: 6-5-2009	SCALE: 3/16" = 1'-0" H
& EGW		3/8" = 1'-0" V

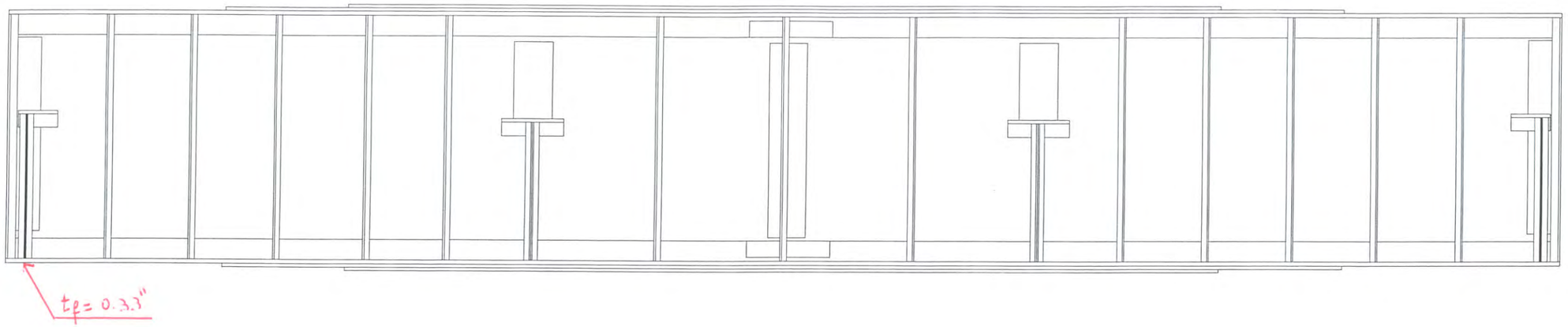

WEST ELEVATION
(LOOKING EAST)

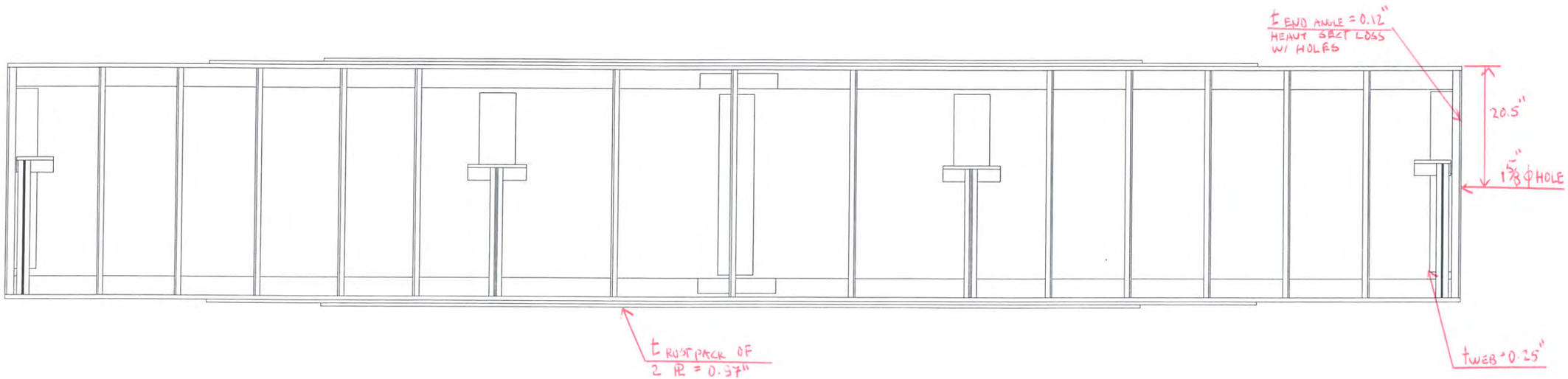

EAST ELEVATION
(LOOKING WEST)

Hoyle, Tanner Associates, Inc.
Consulting Engineers

150 Dow Street
Manchester, NH 03101-1227
Tel 603-669-5555, Fax 603-669-4168
Web Page: www.hoyletanner.com
© Copyright 2009

SARAH LONG BRIDGE
SPAN 5 EAST GIRDER ELEVATION

INSPECTED BY: JB & EGW	DATE: 5-29-2009	SCALE: 3/16" = 1'-0" H 1/8" = 1'-0" V

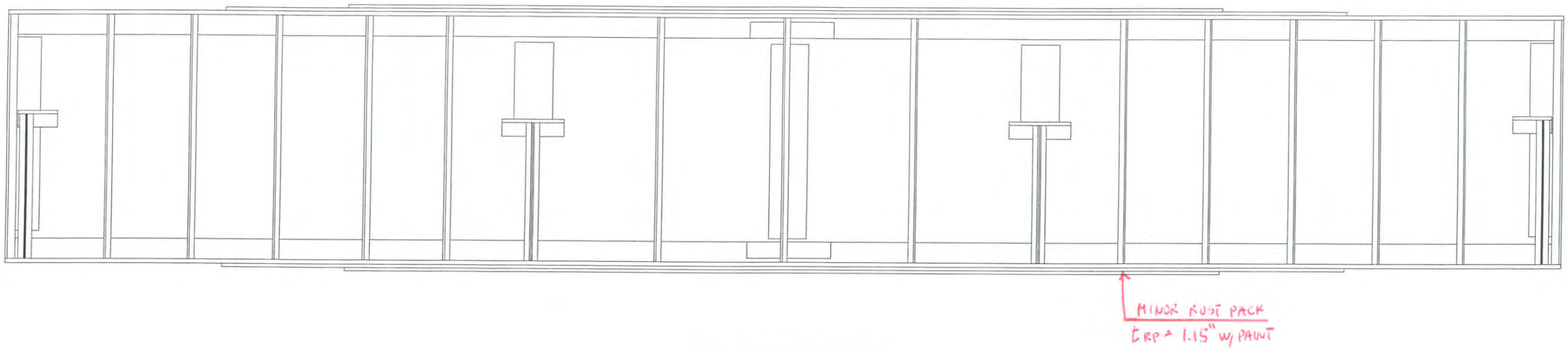

EAST ELEVATION
(LOOKING WEST)

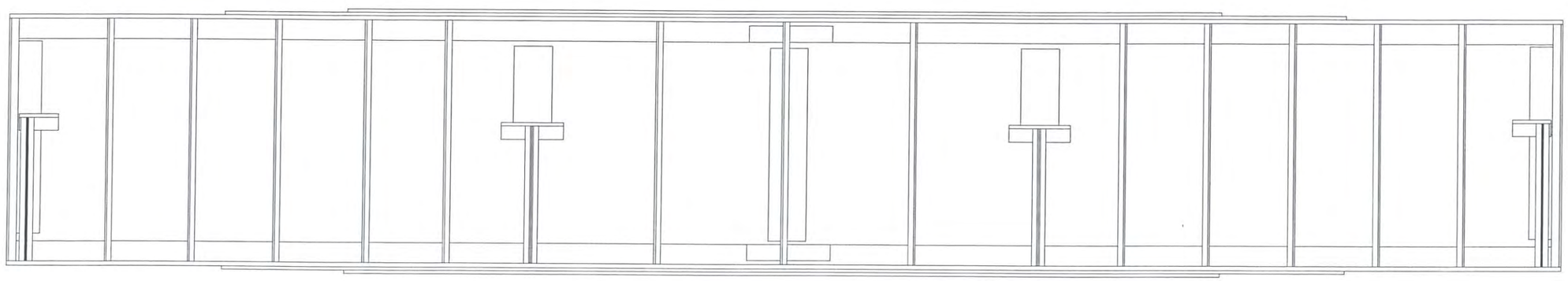

WEST ELEVATION
(LOOKING EAST)

Hoyle, Tanner Associates, Inc.
Consulting Engineers
150 Dow Street.
Manchester, NH 03101–1227
Tel 603–669–5555, Fax 603–669–4168
Web Page: www.hoyletanner.com
© Copyright 2009

SARAH LONG BRIDGE
SPAN 5 WEST GIRDER ELEVATION

INSPECTED BY: JB & EGW	DATE: 6-5-2007	SCALE: 3/16" = 1'–0" H 3/8" = 1'–0" V

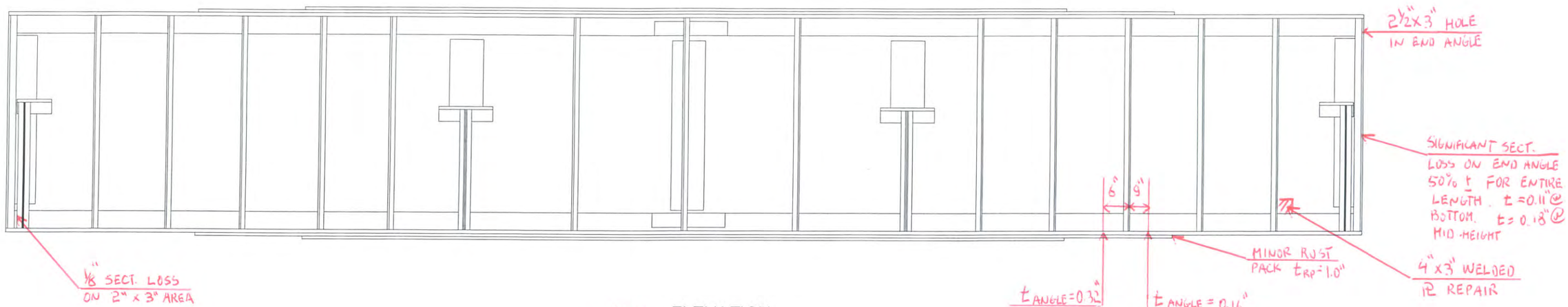

EAST ELEVATION
(LOOKING WEST)

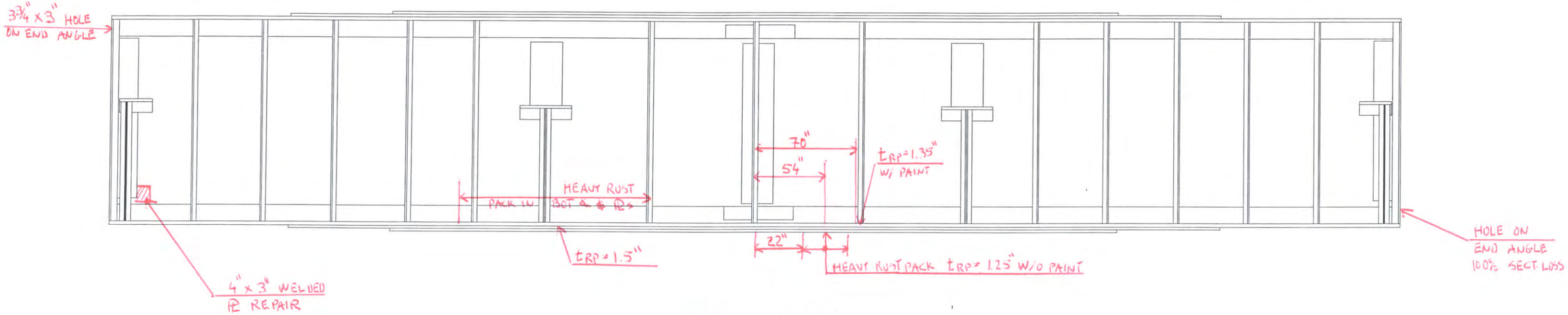

WEST ELEVATION
(LOOKING EAST)

Hoyle, Tanner Associates, Inc.
Consulting Engineers
150 Dow Street.
Manchester, NH 03101-1227
Tel 603-669-5555, Fax 603-669-4168
Web Page: www.hoyletanner.com
© Copyright 2009

SARAH LONG BRIDGE
SPAN 6 WEST GIRDER ELEVATION

INSPECTED BY: JB & EGW	DATE:	SCALE: 3/16" = 1'-0" H ⅞" = 1'-0" V

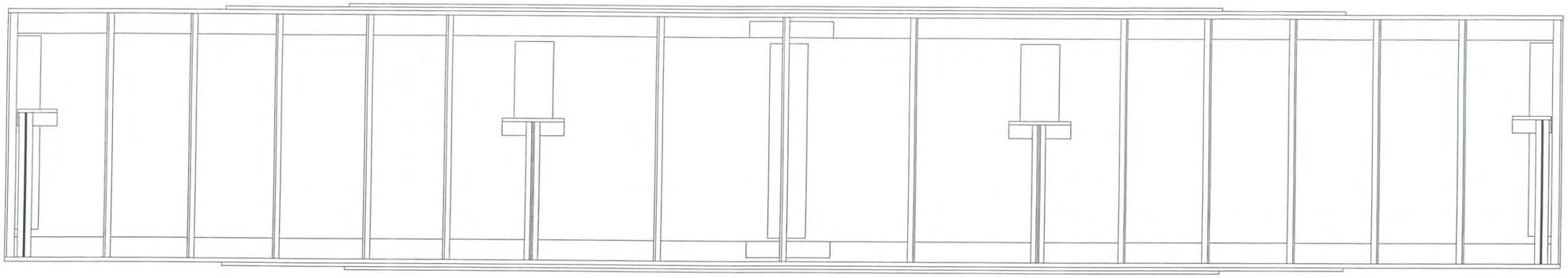

WEST ELEVATION
(LOOKING EAST)

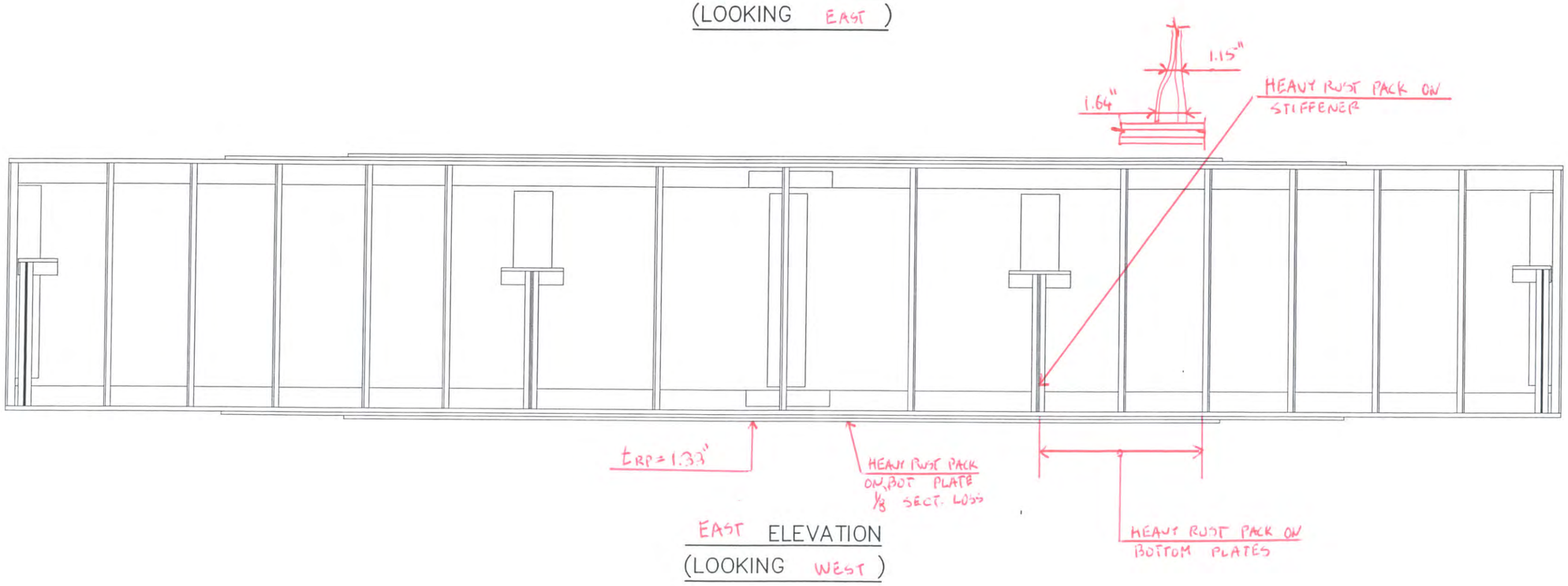

EAST ELEVATION
(LOOKING WEST)

Hoyle, Tanner Associates, Inc.
Consulting Engineers
150 Dow Street.
Manchester, NH 03101–1227
Tel 603–669–5555, Fax 603–669–4168
Web Page: www.hoyletanner.com
© Copyright 2009

SARAH LONG BRIDGE
SPAN 7 EAST GIRDER ELEVATION

INSPECTED BY: JB & EGW	DATE: 6-1-2009	SCALE: 3/16" = 1'–0" H 1/8" = 1'–0" V

WEST ELEVATION
(LOOKING EAST)

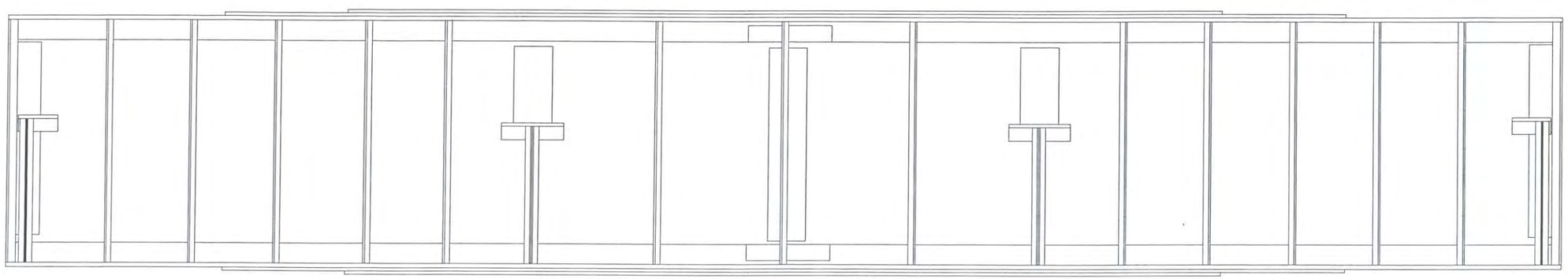

EAST ELEVATION
(LOOKING WEST)

Hoyle, Tanner Associates, Inc.
Consulting Engineers

150 Dow Street.
Manchester, NH 03101-1227
Tel 603-669-5555, Fax 603-669-4168
Web Page: www.hoyletanner.com
© Copyright 2009

SARAH LONG BRIDGE
SPAN 7 WEST GIRDER ELEVATION

INSPECTED BY: JB & EGW	DATE: 6-3-2009	SCALE: 3/16" = 1'-0" H 7/8" = 1'-0" V

WEST ELEVATION
(LOOKING EAST)

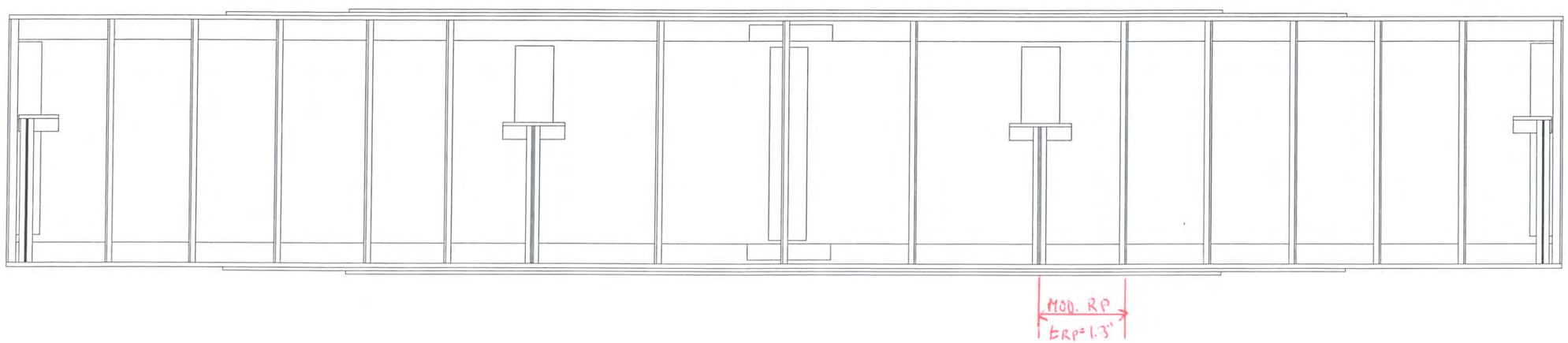

EAST ELEVATION
(LOOKING WEST)

Hoyle, Tanner Associates, Inc.
Consulting Engineers

150 Dow Street.
Manchester, NH 03101-1227
Tel 603-669-5555, Fax 603-669-4168
Web Page: www.hoyletanner.com
© Copyright 2009

SARAH LONG BRIDGE

SPAN 8 WEST GIRDER ELEVATION

INSPECTED BY: JB & EGW	DATE: 6-3-2009	SCALE: 3/16" = 1'-0" H 3/8" = 1'-0" V

EAST ELEVATION
(LOOKING WEST)

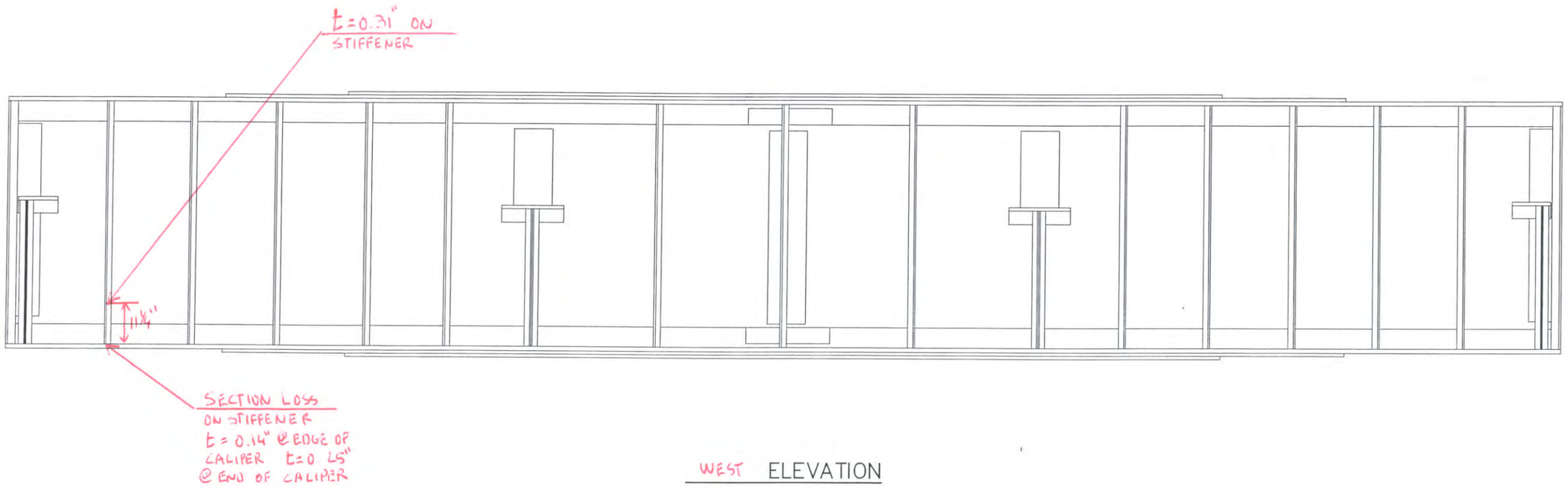

WEST ELEVATION
(LOOKING EAST)

Hoyle, Tanner Associates, Inc.
Consulting Engineers
150 Dow Street.
Manchester, NH 03101-1227
Tel 603-669-5555, Fax 603-669-4168
Web Page: www.hoyletanner.com
© Copyright 2009

SARAH LONG BRIDGE
SPAN 8 EAST GIRDER ELEVATION

INSPECTED BY: JB & EGW	DATE: 6-2-2009	SCALE: 3/16" = 1'-0" H, 3/8" = 1'-0" V

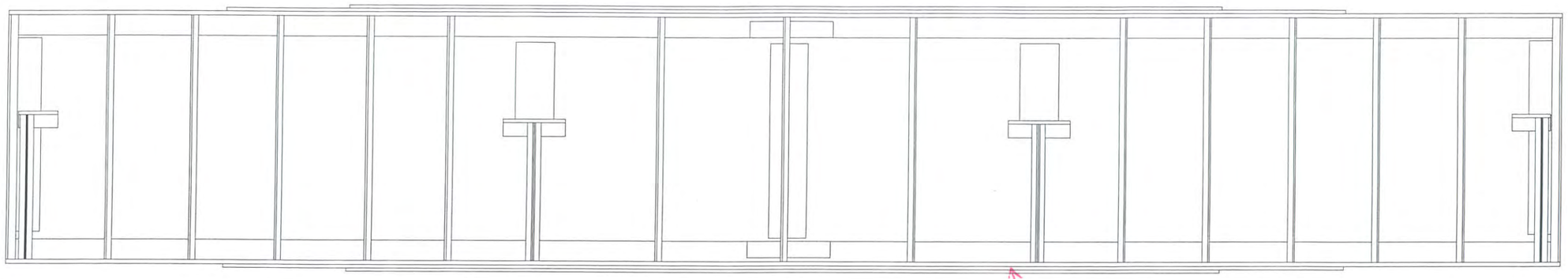

EAST ELEVATION
(LOOKING WEST)

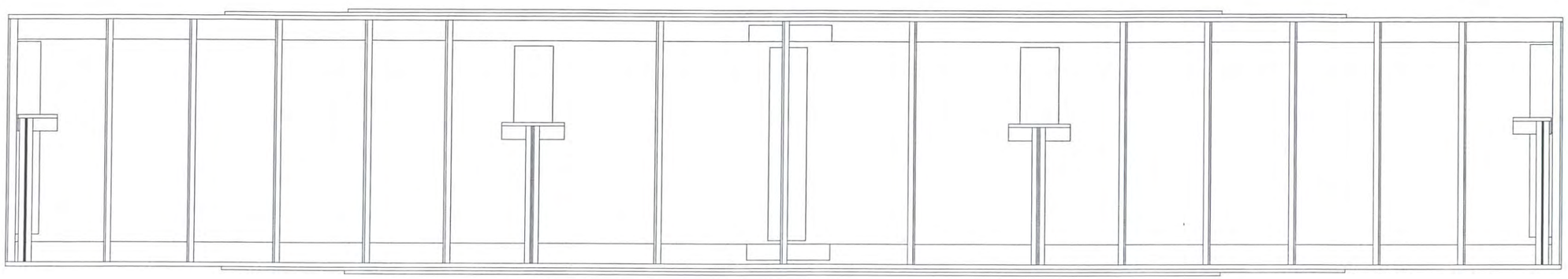

WEST ELEVATION
(LOOKING EAST)

Hoyle, Tanner Associates, Inc.
Consulting Engineers
150 Dow Street.
Manchester, NH 03101-1227
Tel 603-669-5555, Fax 603-669-4168
Web Page: www.hoyletanner.com
© Copyright 2009

SARAH LONG BRIDGE
SPAN 10 WEST GIRDER ELEVATION

INSPECTED BY: JB & EGW	DATE: 6-3-2009	SCALE: 3/16" = 1'-0" H 3/8" = 1'-0" V

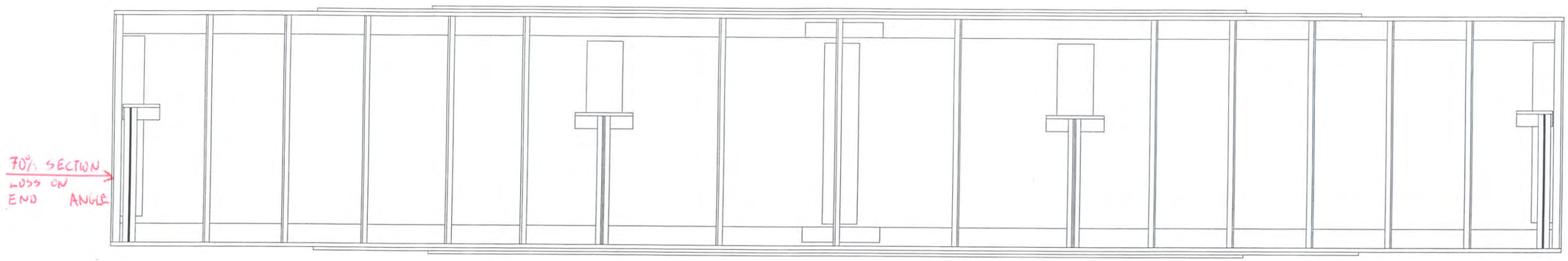

EAST ELEVATION
(LOOKING WEST)

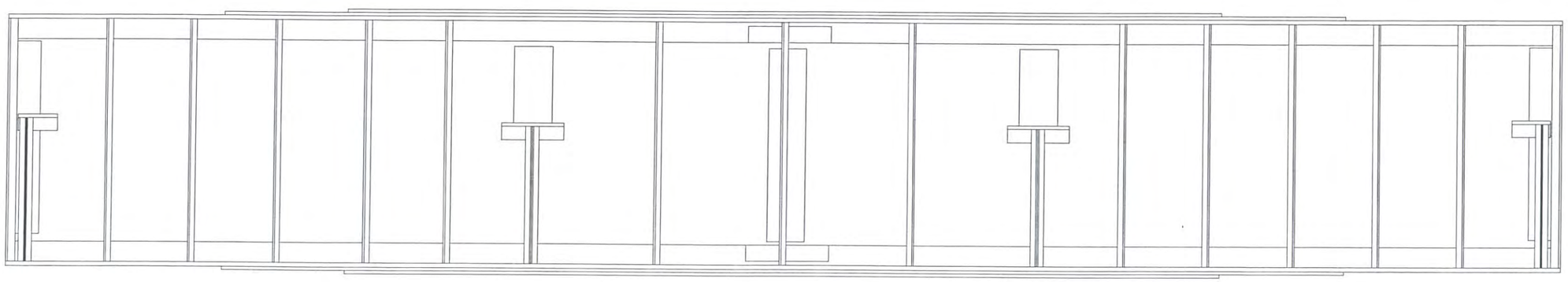

WEST ELEVATION
(LOOKING EAST)

Hoyle, Tanner Associates, Inc.
Consulting Engineers

150 Dow Street.
Manchester, NH 03101-1227
Tel 603-669-5555, Fax 603-669-4168
Web Page: www.hoyletanner.com
© Copyright 2009

SARAH LONG BRIDGE
SPAN 10 EAST GIRDER ELEVATION

INSPECTED BY: JB & EGW	DATE: 6-1-2009	SCALE: 3/16" = 1'-0" H 3/8" = 1'-0" V

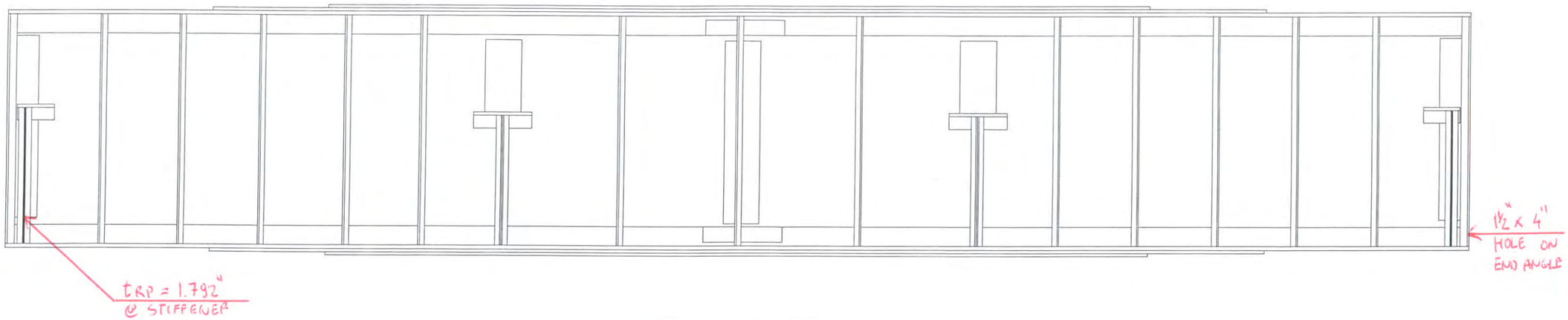

EAST ELEVATION
(LOOKING WEST)

WEST ELEVATION
(LOOKING EAST)

Hoyle, Tanner Associates, Inc.
Consulting Engineers

150 Dow Street
Manchester, NH 03101-1227
Tel 603-669-5555, Fax 603-669-4168
Web Page: www.hoyletanner.com
© Copyright 2009

SARAH LONG BRIDGE

SPAN 11 WEST GIRDER ELEVATION

INSPECTED BY: JB	DATE: 6-3-2009	SCALE: 3/16" = 1'-0" H
& EGW		1/8" = 1'-0" V

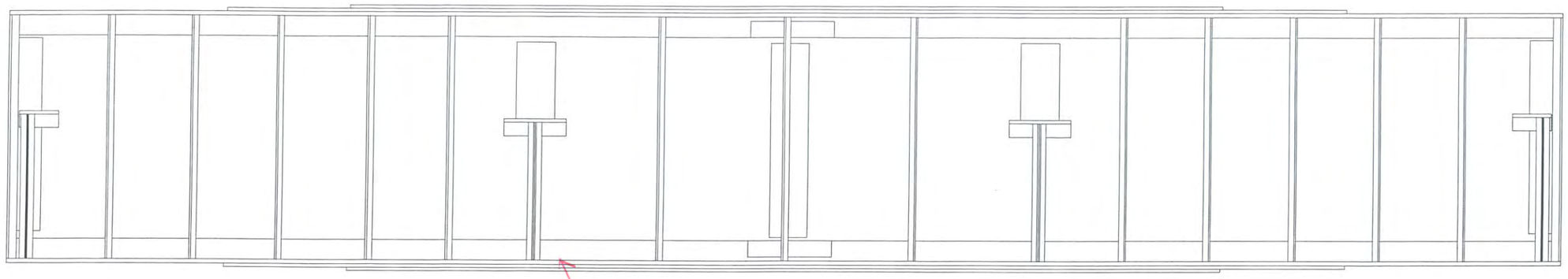

EAST ELEVATION
(LOOKING WEST)

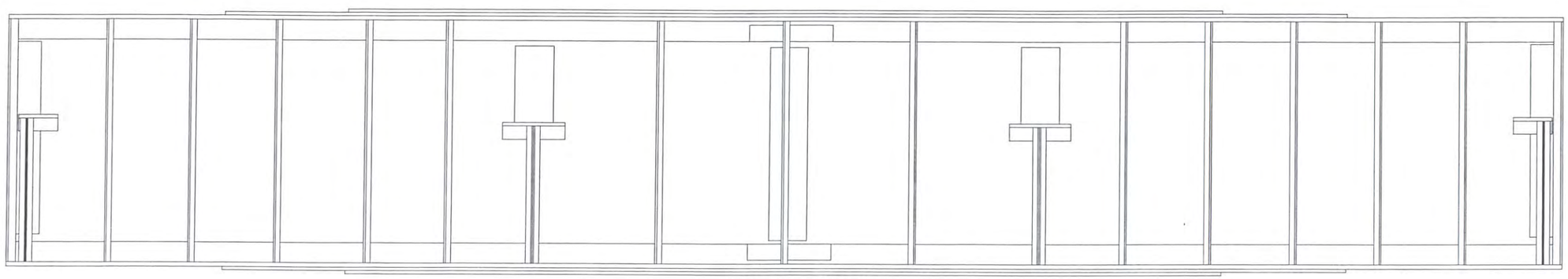

WEST ELEVATION
(LOOKING EAST)

Hoyle, Tanner Associates, Inc.
Consulting Engineers

150 Dow Street.
Manchester, NH 03101-1227
Tel 603-669-5555, Fax 603-669-4168
Web Page: www.hoyletanner.com
© Copyright 2009

SARAH LONG BRIDGE

SPAN 11 EAST GIRDER ELEVATION

INSPECTED BY: JB & EGW	DATE: 6-1-2009	SCALE: 3/16" = 1'-0" H 3/8" = 1'-0" V

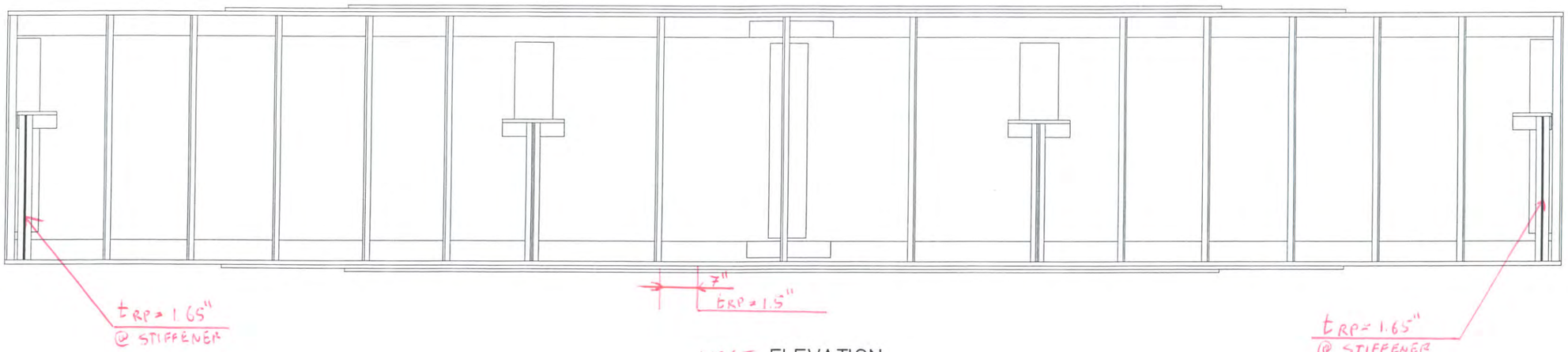

WEST ELEVATION
(LOOKING EAST)

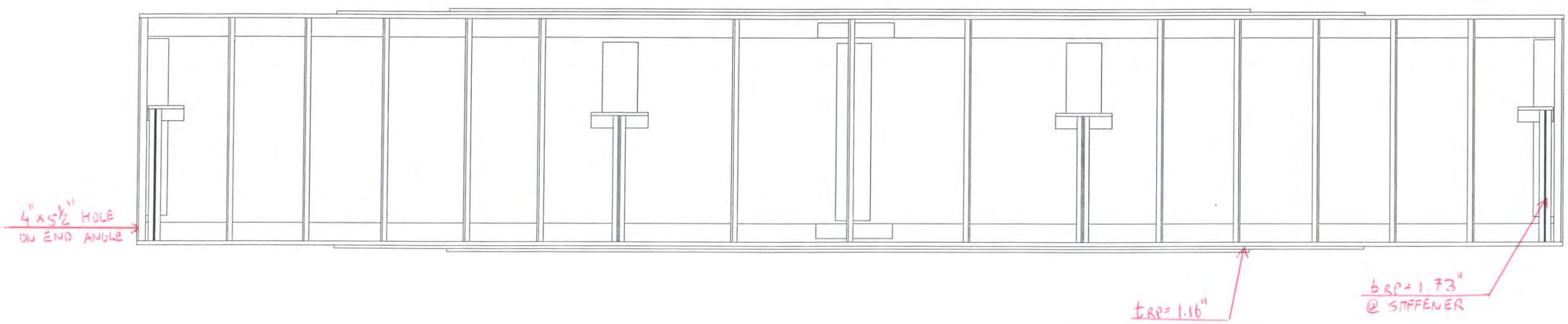

EAST ELEVATION
(LOOKING WEST)

Hoyle, Tanner Associates, Inc.
Consulting Engineers

150 Dow Street,
Manchester, NH 03101-1227
Tel 603-669-5555, Fax 603-669-4168
Web Page: www.hoyletanner.com
© Copyright 2009

SARAH LONG BRIDGE

SPAN 12 WEST GIRDER ELEVATION

INSPECTED BY: JB & EGW	DATE: 6-3-2009	SCALE: 3/16" = 1'-0" H, 3/8" = 1'-0" V

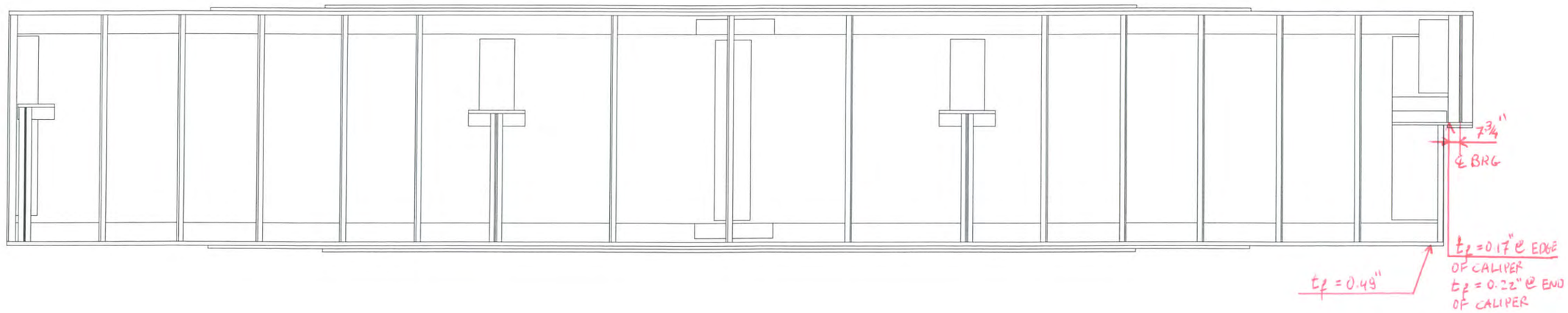

EAST ELEVATION
(LOOKING WEST)

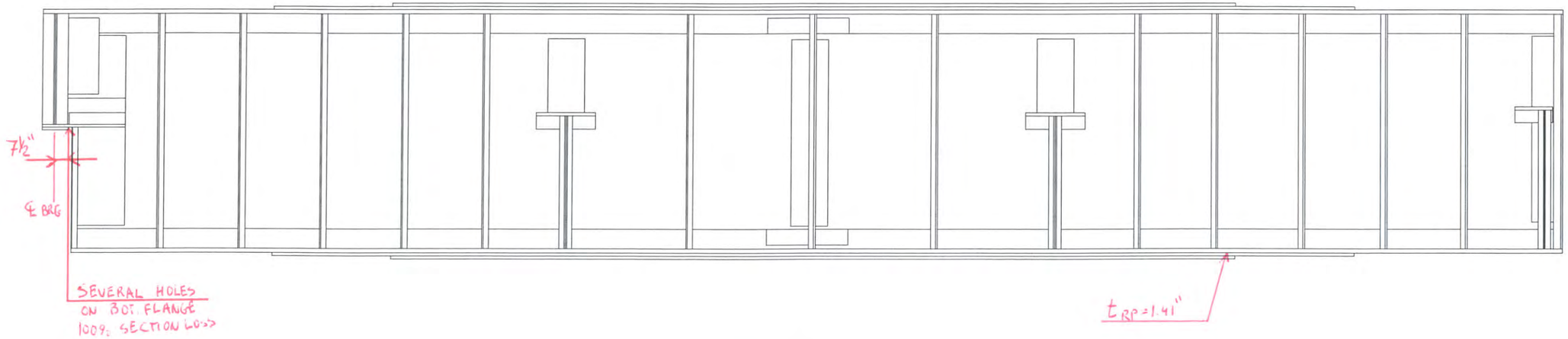

WEST ELEVATION
(LOOKING EAST)

Hoyle, Tanner Associates, Inc.
Consulting Engineers

150 Dow Street.
Manchester, NH 03101-1227
Tel 603-669-5555, Fax 603-669-4168
Web Page: www.hoyletanner.com
© Copyright 2009

SARAH LONG BRIDGE
SPAN 13 WEST GIRDER ELEVATION

INSPECTED BY: JB	DATE: 6-3-2003	SCALE: 3/16" = 1'-0" H
℄ EGW		3/8" = 1'-0" V

EAST ELEVATION
(LOOKING WEST)

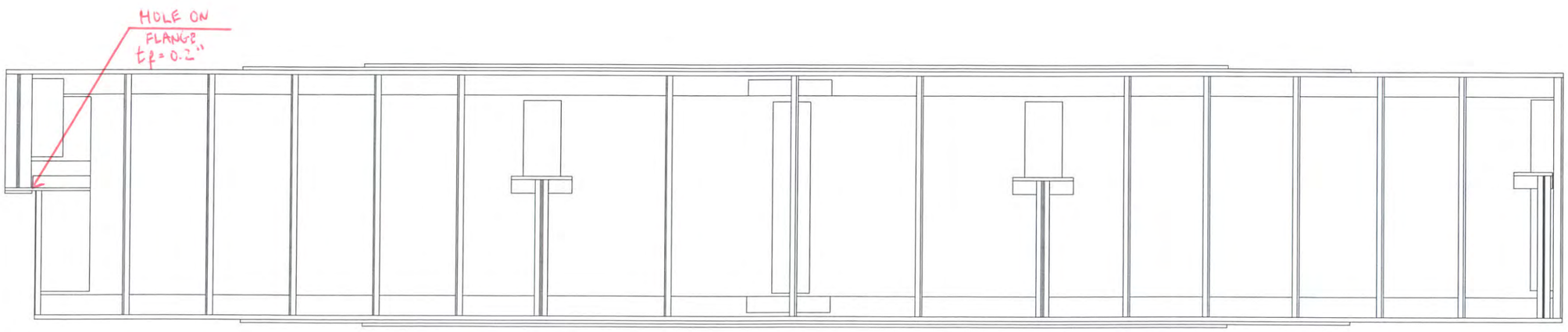

WEST ELEVATION
(LOOKING EAST)

Hoyle, Tanner Associates, Inc.
Consulting Engineers

150 Dow Street.
Manchester, NH 03101-1227
Tel 603-669-5555, Fax 603-669-4168
Web Page: www.hoyletanner.com
© Copyright 2009

SARAH LONG BRIDGE
SPAN B EAST GIRDER ELEVATION

INSPECTED BY: JB	DATE: 6-1-2009	SCALE: 3/16" = 1'-0" H
B EGW		1/8" = 1'-0" V

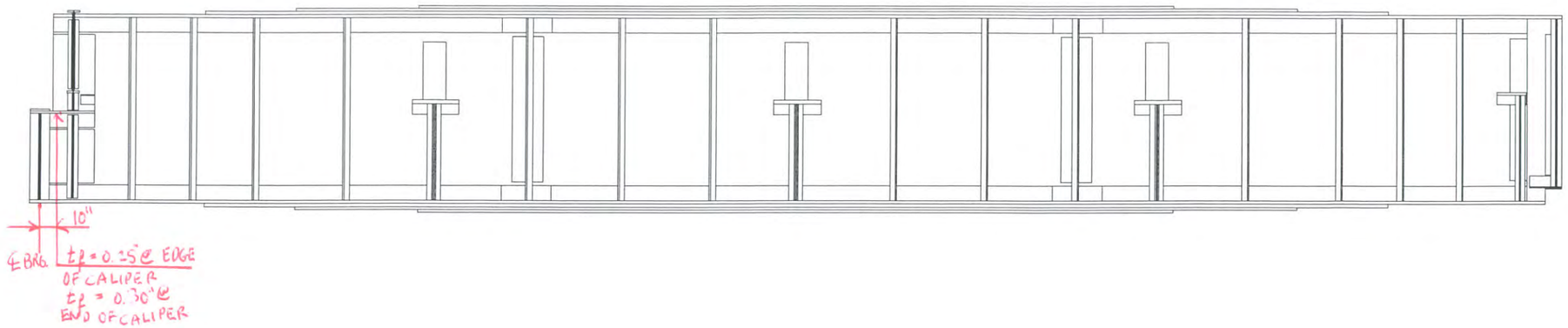

EAST ELEVATION
(LOOKING WEST)

WEST ELEVATION
(LOOKING EAST)

Hoyle, Tanner Associates, Inc.
Consulting Engineers

150 Dow Street.
Manchester, NH 03101–1227
Tel 603–669–5555, Fax 603–669–4168
Web Page: www.hoyletanner.com
© Copyright 2009

SARAH LONG BRIDGE

SPAN 14 WEST GIRDER ELEVATION

INSPECTED BY: JB	DATE: 6-3-2003	SCALE: ⅛" = 1'–0" H
± EGW		¼" = 1'–0" V

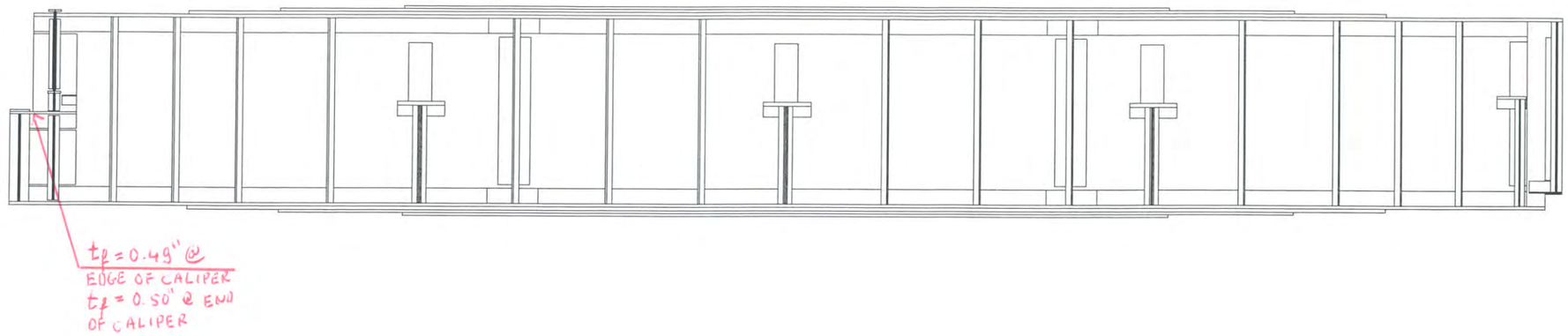

EAST ELEVATION
(LOOKING WEST)

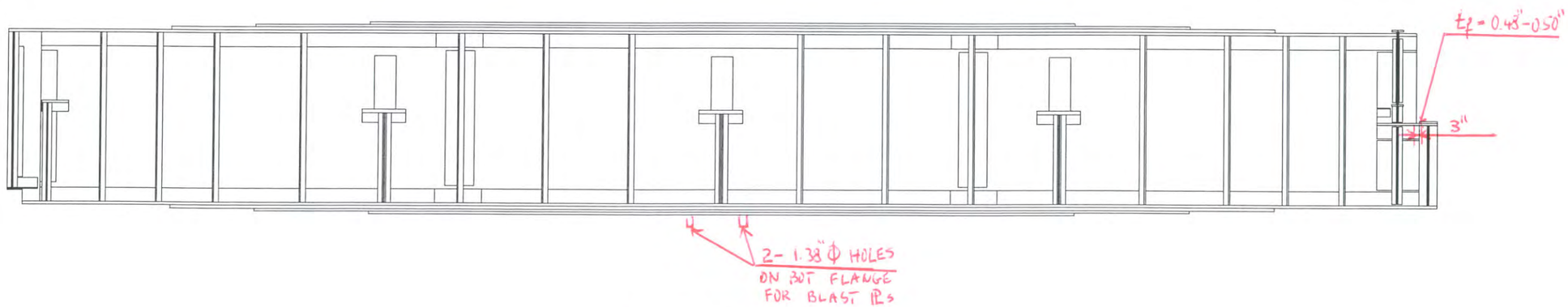

WEST ELEVATION
(LOOKING EAST)

Hoyle, Tanner Associates, Inc.
Consulting Engineers
150 Dow Street.
Manchester, NH 03101-1227
Tel 603-669-5555, Fax 603-669-4168
Web Page: www.hoyletanner.com
© Copyright 2009

SARAH LONG BRIDGE

SPAN 14 EAST GIRDER ELEVATION

INSPECTED BY: JB	DATE: 6-1-2004	SCALE: 1/8" = 1'-0" H
& EGW		1/4" = 1'-0" V

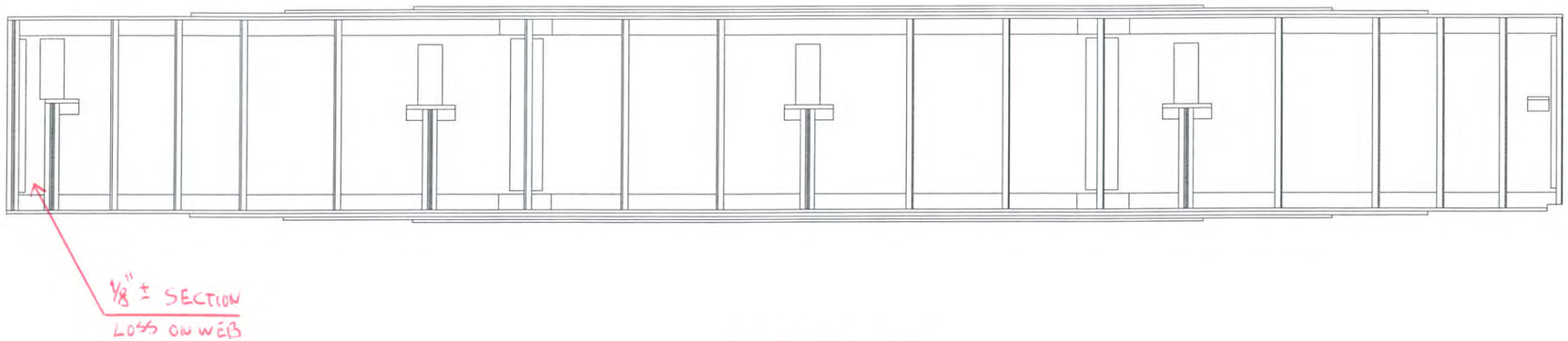

WEST ELEVATION
(LOOKING EAST)

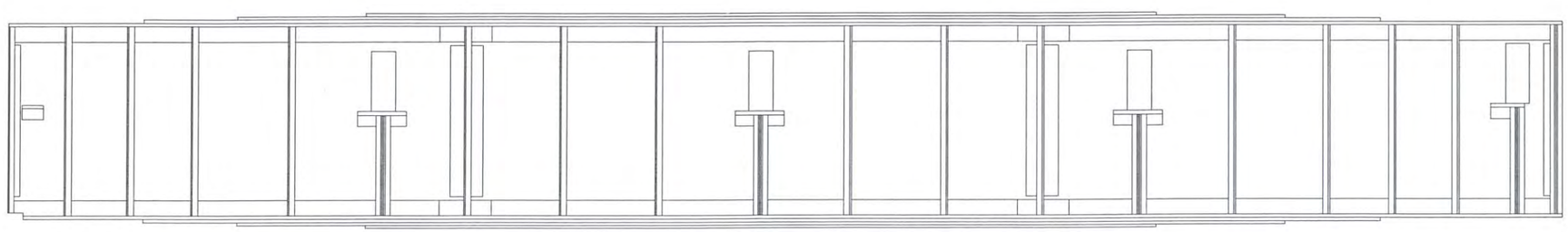

EAST ELEVATION
(LOOKING WEST)

Hoyle, Tanner Associates, Inc.
Consulting Engineers

150 Dow Street.
Manchester, NH 03101-1227
Tel 603-669-5555, Fax 603-669-4168
Web Page: www.hoyletanner.com
© Copyright 2009

SARAH LONG BRIDGE
SPAN 15 EAST GIRDER ELEVATION

INSPECTED BY: JB	DATE: 5-28-2009	SCALE: 1/8" = 1'-0" H
& EGW	& 6-1-2009	1/4" = 1'-0" V

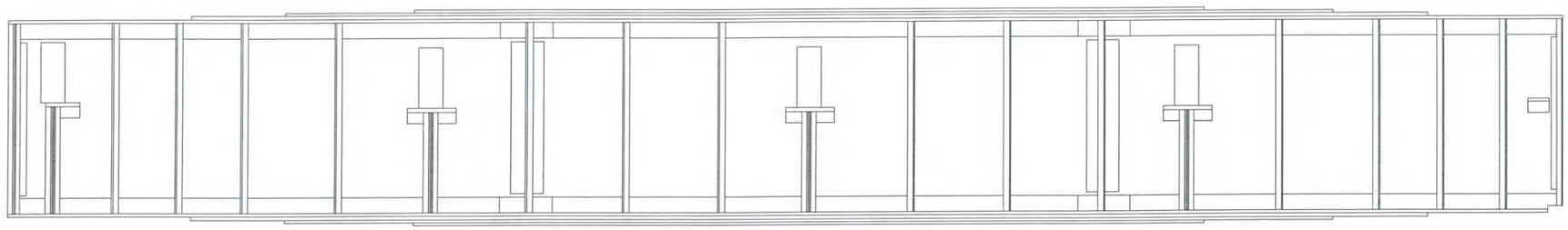

EAST ELEVATION
(LOOKING WEST)

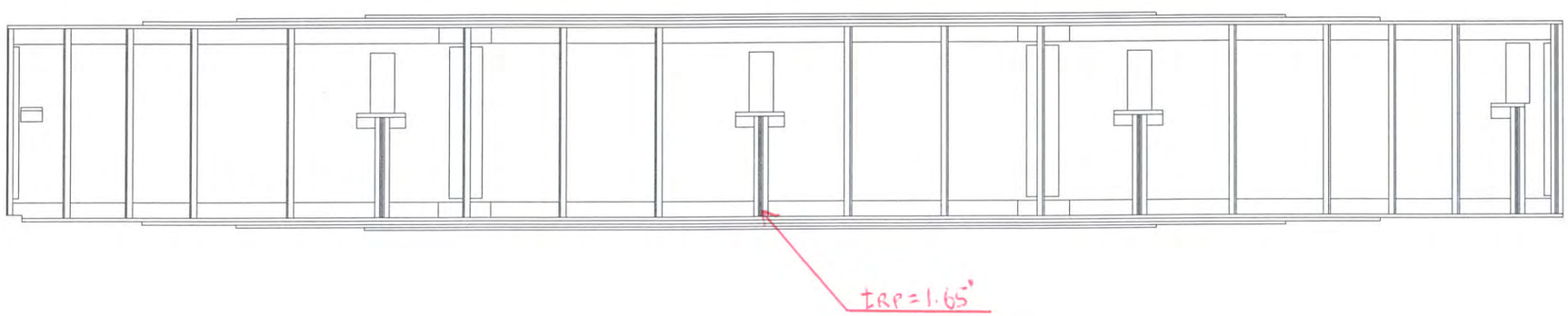

WEST ELEVATION
(LOOKING EAST)

Hoyle, Tanner Associates, Inc.
Consulting Engineers
150 Dow Street.
Manchester, NH 03101-1227
Tel 603-669-5555, Fax 603-669-4168
Web Page: www.hoyletanner.com
© Copyright 2009

SARAH LONG BRIDGE

SPAN 15 WEST GIRDER ELEVATION

INSPECTED BY: JB & EGW	DATE: 5-28-03	SCALE: ⅛" = 1'-0" H ¼" = 1'-0" V

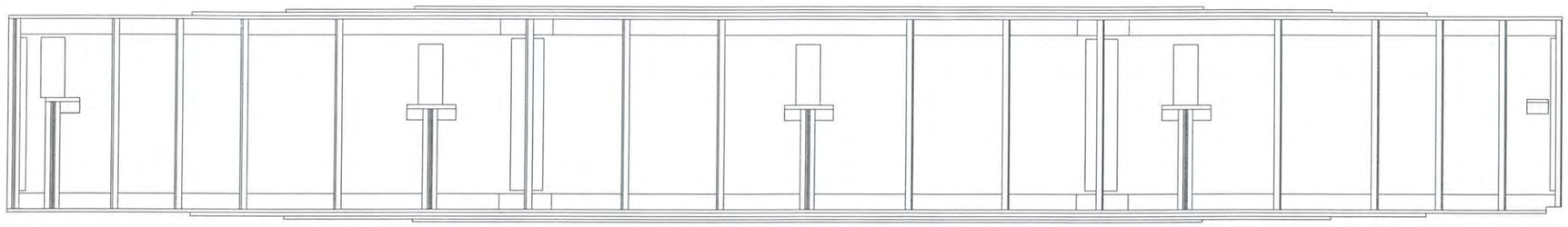

EAST ELEVATION
(LOOKING WEST)

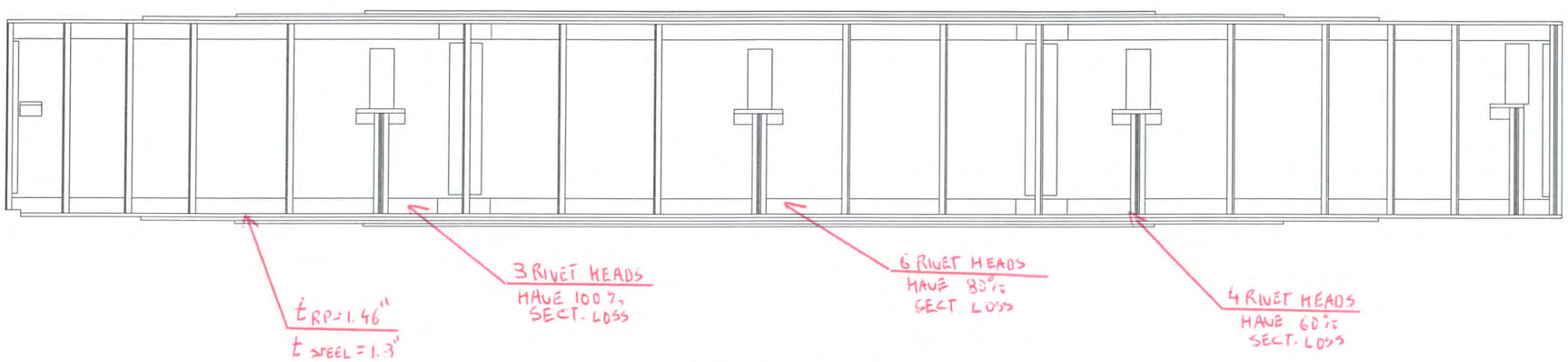

WEST ELEVATION
(LOOKING EAST)

Hoyle, Tanner Associates, Inc.
Consulting Engineers
150 Dow Street,
Manchester, NH 03101-1227
Tel 603-669-5555, Fax 603-669-4168
Web Page: www.hoyletanner.com
© Copyright 2009

SARAH LONG BRIDGE
SPAN 21 WEST GIRDER ELEVATION

INSPECTED BY: JB & EGW	DATE: 6-4-2009	SCALE: 1/8" = 1'-0" H 1/4" = 1'-0" V

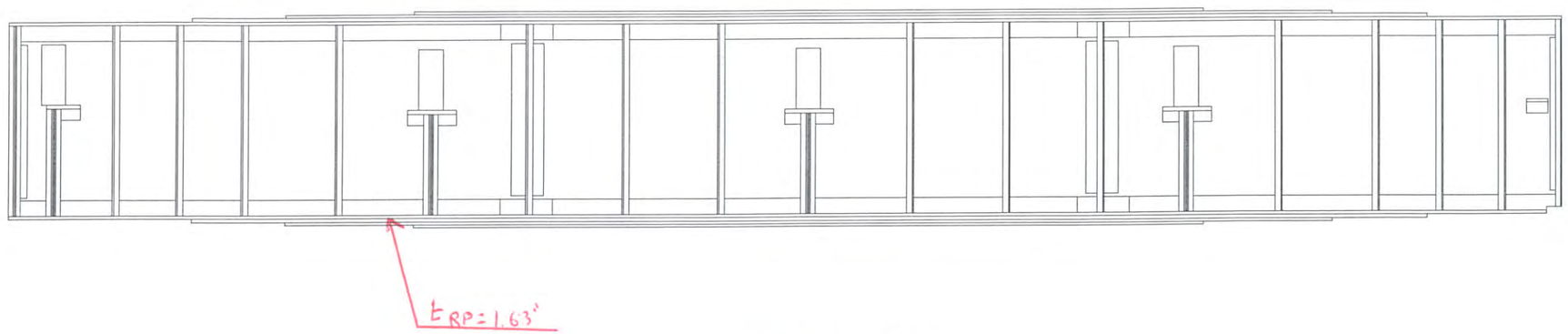

EAST ELEVATION
(LOOKING WEST)

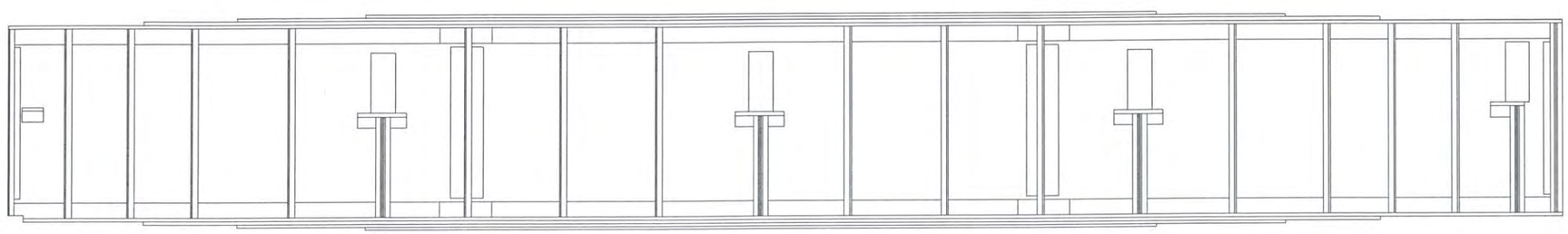

WEST ELEVATION
(LOOKING EAST)

Hoyle, Tanner Associates, Inc.
Consulting Engineers

150 Dow Street,
Manchester, NH 03101-1227
Tel 603-669-5555, Fax 603-669-4168
Web Page: www.hoyletanner.com
© Copyright 2009

SARAH LONG BRIDGE

SPAN 21 EAST GIRDER ELEVATION

INSPECTED BY: JB & EGW	DATE: 6-2-2009	SCALE: ⅛" = 1'-0" H ¼" = 1'-0" V

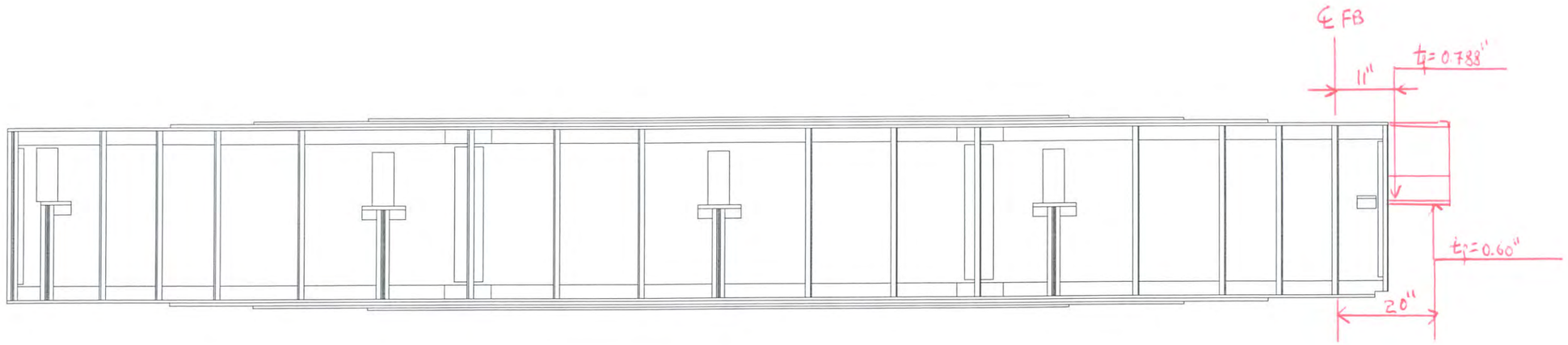

WEST ELEVATION
(LOOKING EAST)

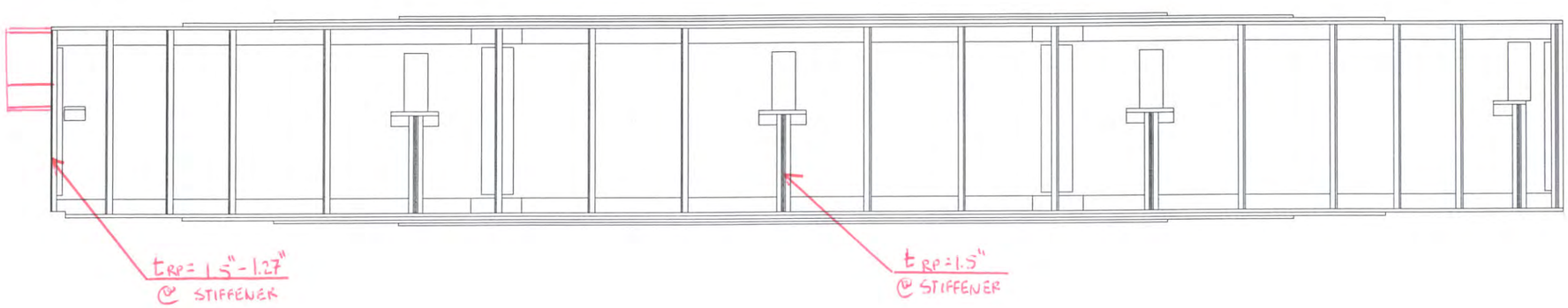

EAST ELEVATION
(LOOKING WEST)

Hoyle, Tanner Associates, Inc.
Consulting Engineers
150 Dow Street.
Manchester, NH 03101-1227
Tel 603-669-5555, Fax 603-669-4168
Web Page: www.hoyletanner.com
© Copyright 2009

SARAH LONG BRIDGE
SPAN 22 EAST GIRDER ELEVATION

INSPECTED BY: JB & EGW	DATE: 6-6-09	SCALE: ⅛" = 1'-0" H ¼" = 1'-0" V

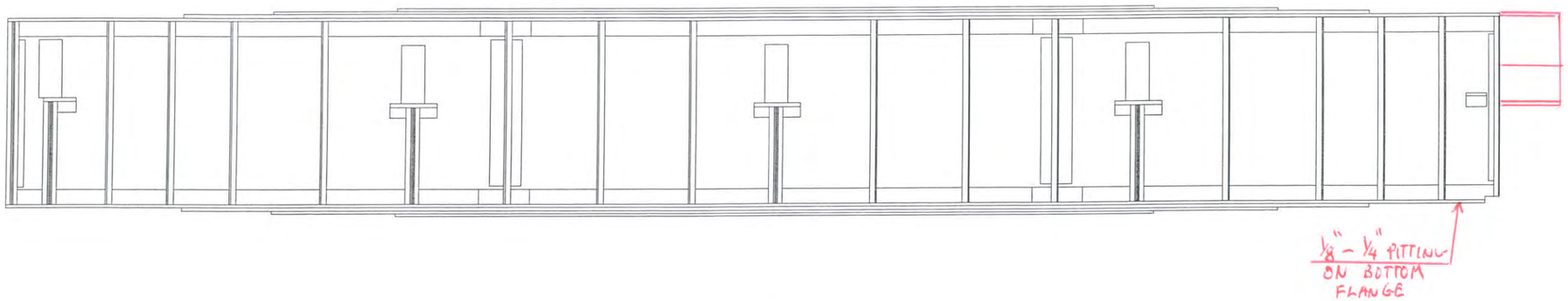

WEST ELEVATION
(LOOKING EAST)

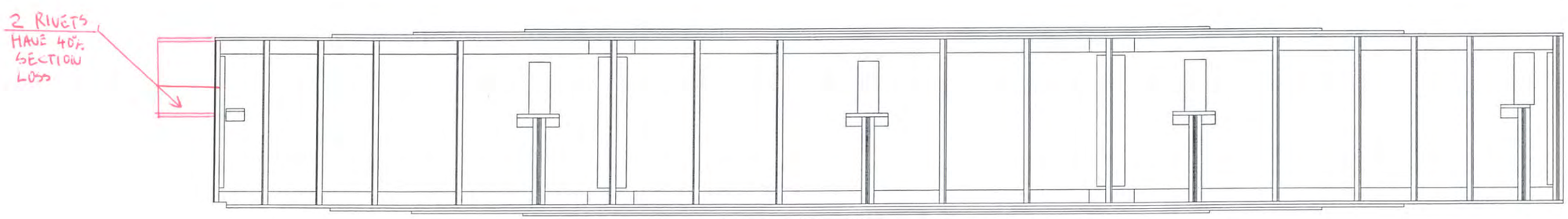

EAST ELEVATION
(LOOKING WEST)

Hoyle, Tanner Associates, Inc.
Consulting Engineers

150 Dow Street
Manchester, NH 03101-1227
Tel 603-669-5555, Fax 603-669-4168
Web Page: www.hoyletanner.com
© Copyright 2009

SARAH LONG BRIDGE

SPAN 22 WEST GIRDER ELEVATION

INSPECTED BY: JB & EGW	DATE: 6-4-09	SCALE: 1/8" = 1'-0" H 1/4" = 1'-0" V

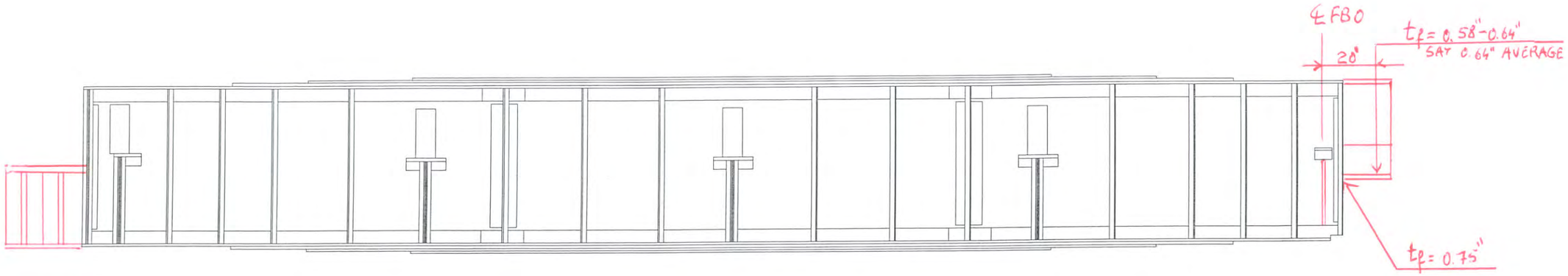

WEST ELEVATION
(LOOKING EAST)

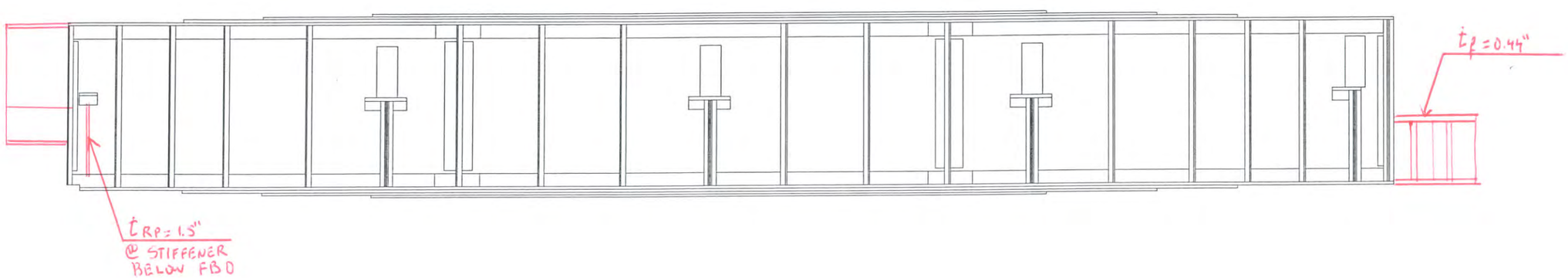

EAST ELEVATION
(LOOKING WEST)

Hoyle, Tanner Associates, Inc.
Consulting Engineers
150 Dow Street
Manchester, NH 03101-1227
Tel 603-669-5555, Fax 603-669-4168
Web Page: www.hoyletanner.com
© Copyright 2009

SARAH LONG BRIDGE
SPAN 23 EAST GIRDER ELEVATION

INSPECTED BY: JB	DATE: 6-6-2009	SCALE: ⅛" = 1'-0" H
@ EGW		¼" = 1'-0" V

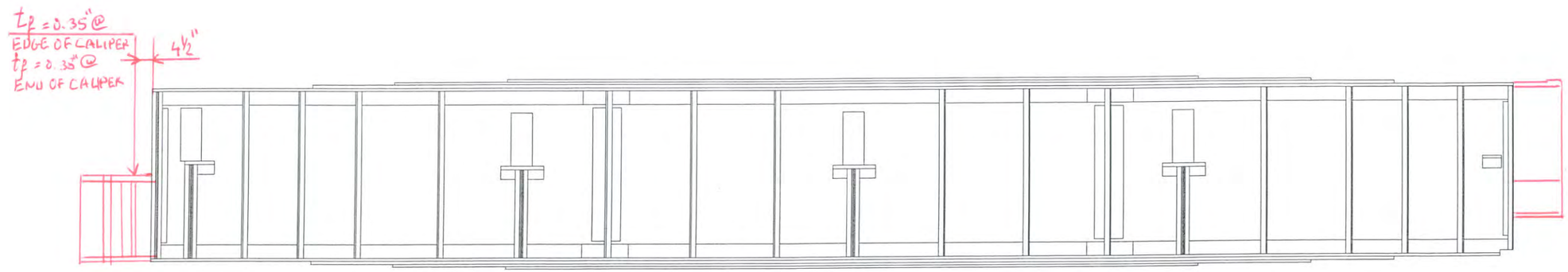

WEST ELEVATION
(LOOKING EAST)

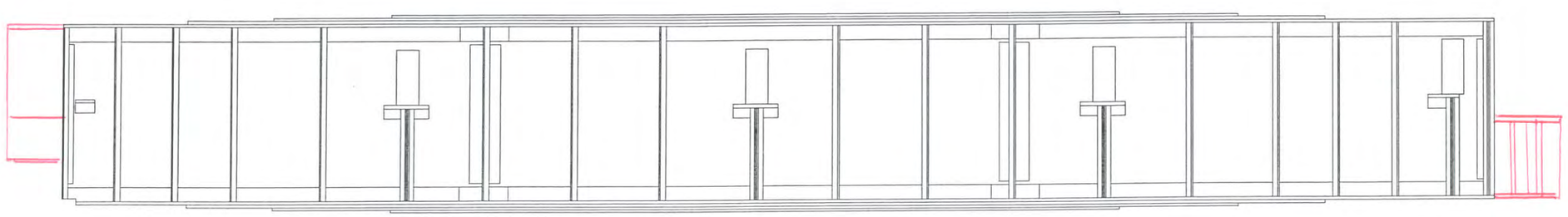

EAST ELEVATION
(LOOKING WEST)

Hoyle, Tanner Associates, Inc.
Consulting Engineers

150 Dow Street
Manchester, NH 03101-1227
Tel 603-669-5555, Fax 603-669-4168
Web Page: www.hoyletanner.com
© Copyright 2009

SARAH LONG BRIDGE

SPAN 23 WEST GIRDER ELEVATION

INSPECTED BY: JB & EGW	DATE: 6-4-2009	SCALE: ⅛" = 1'-0" H ¼" = 1'-0" V

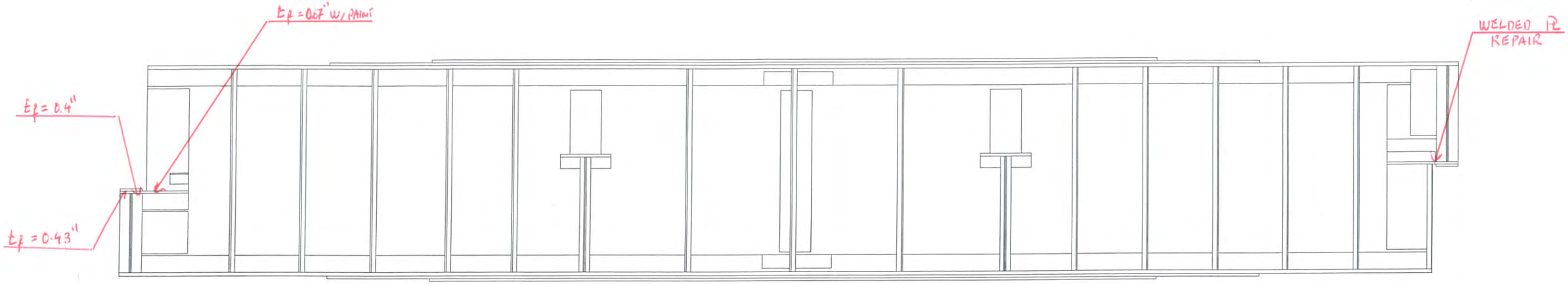

WEST ELEVATION
(LOOKING EAST)

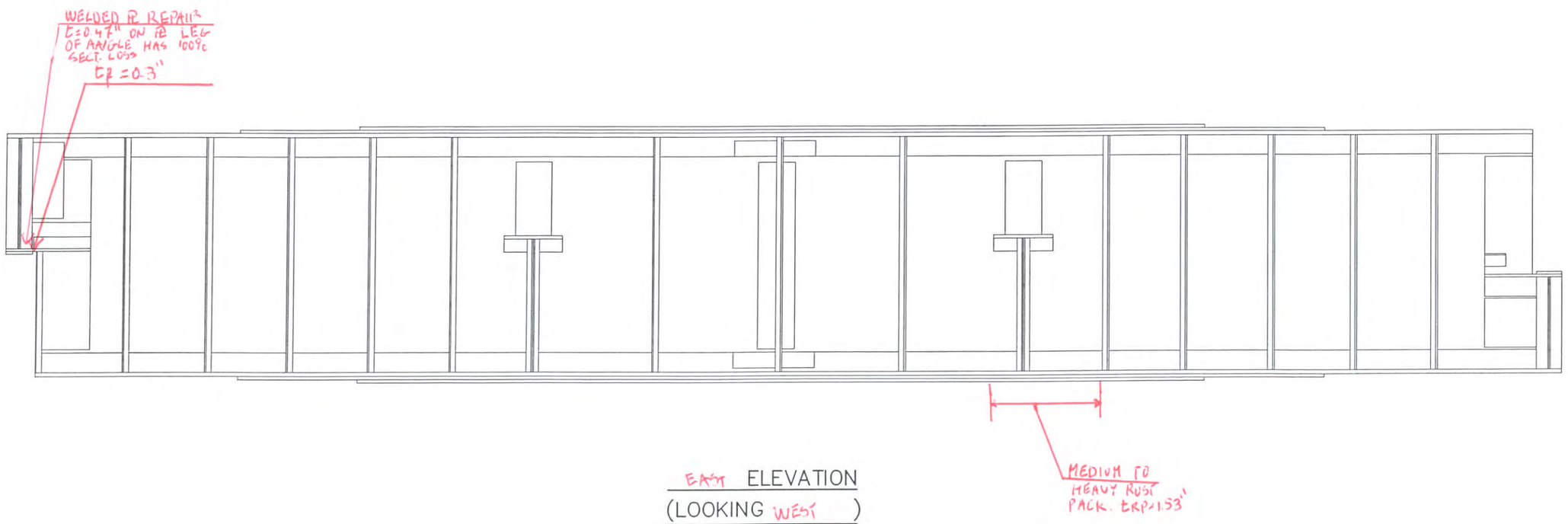

EAST ELEVATION
(LOOKING WEST)

Hoyle, Tanner Associates, Inc.
Consulting Engineers
150 Dow Street.
Manchester, NH 03101–1227
Tel 603–669–5555, Fax 603–669–4168
Web Page: www.hoyletanner.com
© Copyright 2009

SARAH LONG BRIDGE
SPAN 24 EAST GIRDER ELEVATION

INSPECTED BY: JB	DATE: 6-6-2009	SCALE: 3/16" = 1'–0" H
A EGW		3/8" = 1'–0" V

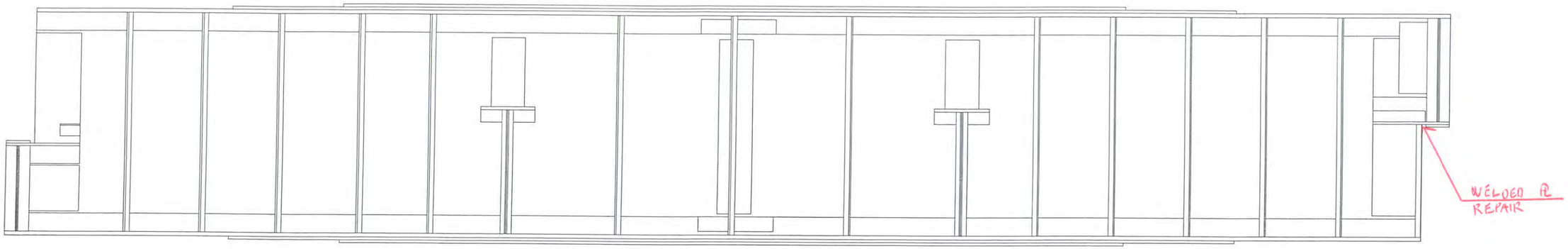

WEST ELEVATION
(LOOKING EAST)

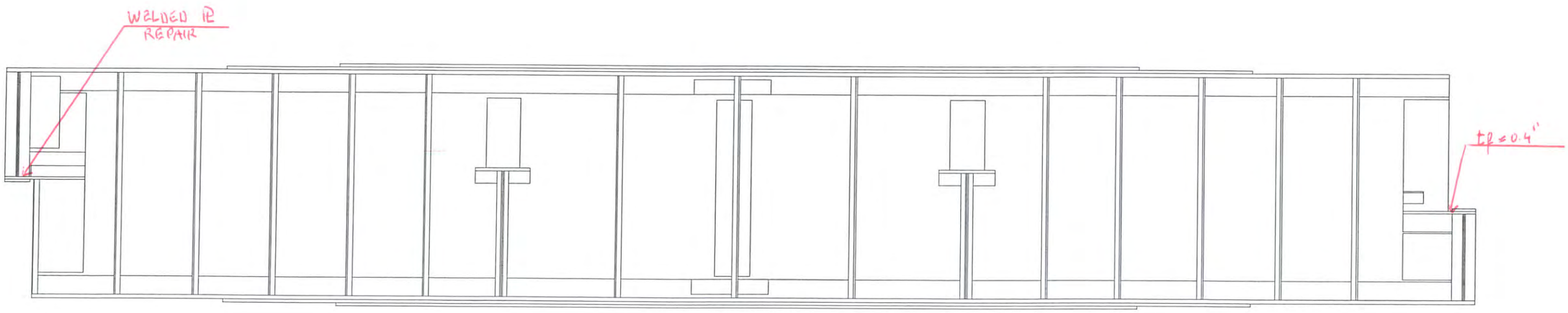

EAST ELEVATION
(LOOKING WEST)

Hoyle, Tanner Associates, Inc.
Consulting Engineers
150 Dow Street.
Manchester, NH 03101-1227
Tel 603-669-5555, Fax 603-669-4168
Web Page: www.hoyletanner.com
© Copyright 2009

SARAH LONG BRIDGE
SPAN 24 WEST GIRDER ELEVATION

INSPECTED BY: JJ & EGN	DATE: 6-6-2003	SCALE: 3/16" = 1'-0" H 3/8" = 1'-0" V

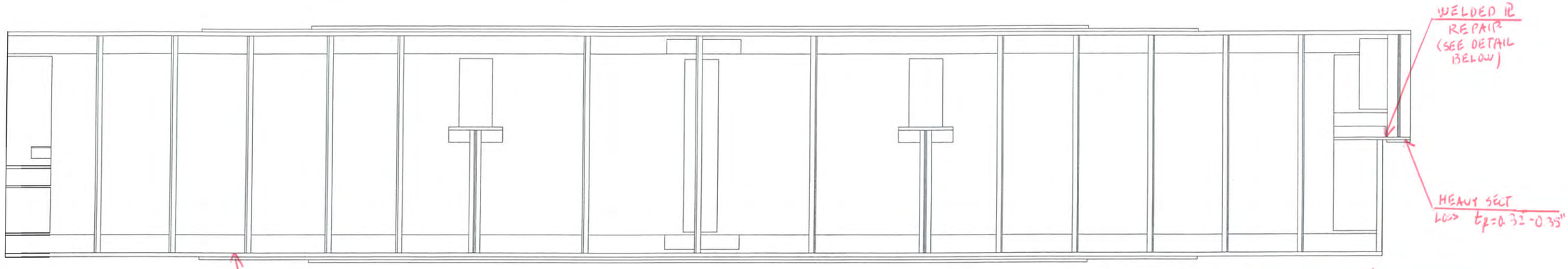

WEST ELEVATION
(LOOKING EAST)

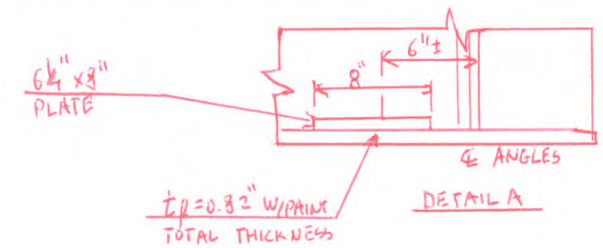

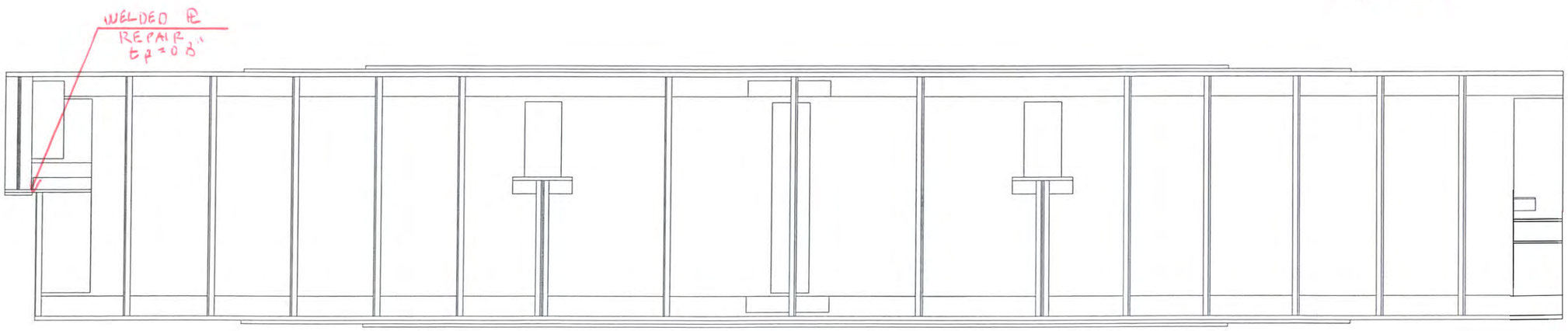

EAST ELEVATION
(LOOKING WEST)

Hoyle, Tanner Associates, Inc.
Consulting Engineers

150 Dow Street.
Manchester, NH 03101-1227
Tel 603-669-5555, Fax 603-669-4168
Web Page: www.hoyletanner.com
© Copyright 2009

SARAH LONG BRIDGE
SPAN 25 WEST GIRDER ELEVATION

INSPECTED BY: JB & EGW	DATE: 6-6-2004	SCALE: 3/16" = 1'-0" H 3/8" = 1'-0" V

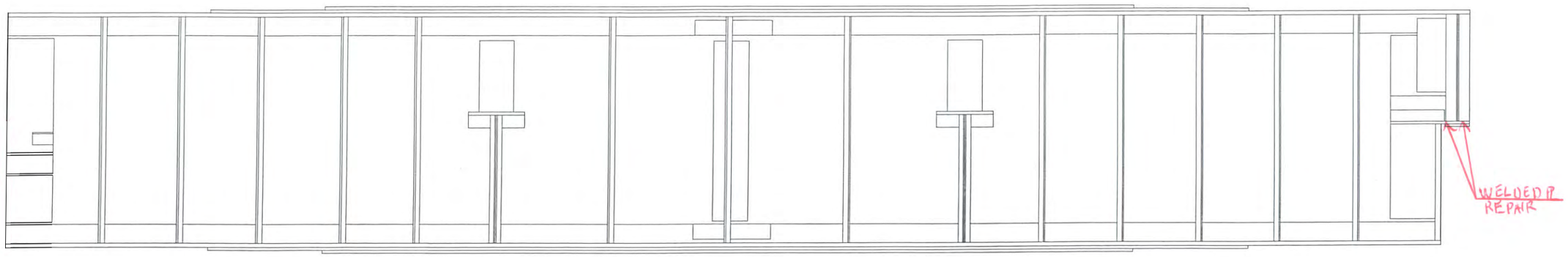

WEST ELEVATION
(LOOKING EAST)

EAST ELEVATION
(LOOKING WEST)

Hoyle, Tanner Associates, Inc.
Consulting Engineers

150 Dow Street.
Manchester, NH 03101-1227
Tel 603-669-5555, Fax 603-669-4168
Web Page: www.hoyletanner.com
© Copyright 2009

SARAH LONG BRIDGE
SPAN 25 EAST GIRDER ELEVATION

INSPECTED BY: JB	DATE: 6-6-2003	SCALE: 3/16" = 1'-0" H
#EGW		3/8" = 1'-0" V

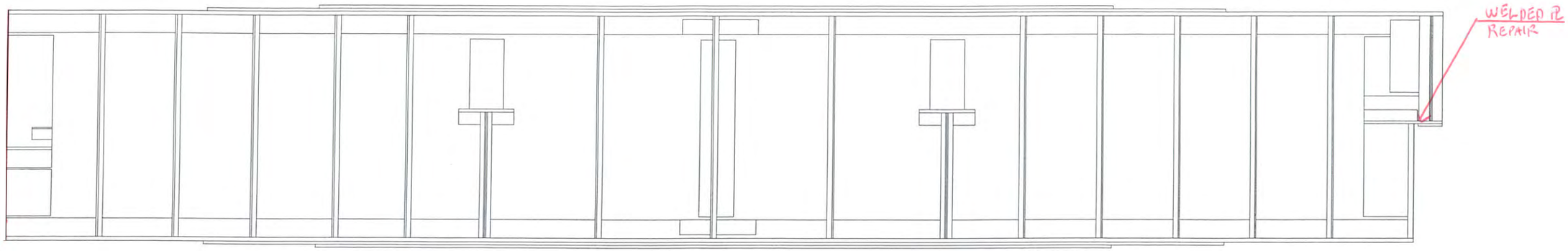

WEST ELEVATION
(LOOKING EAST)

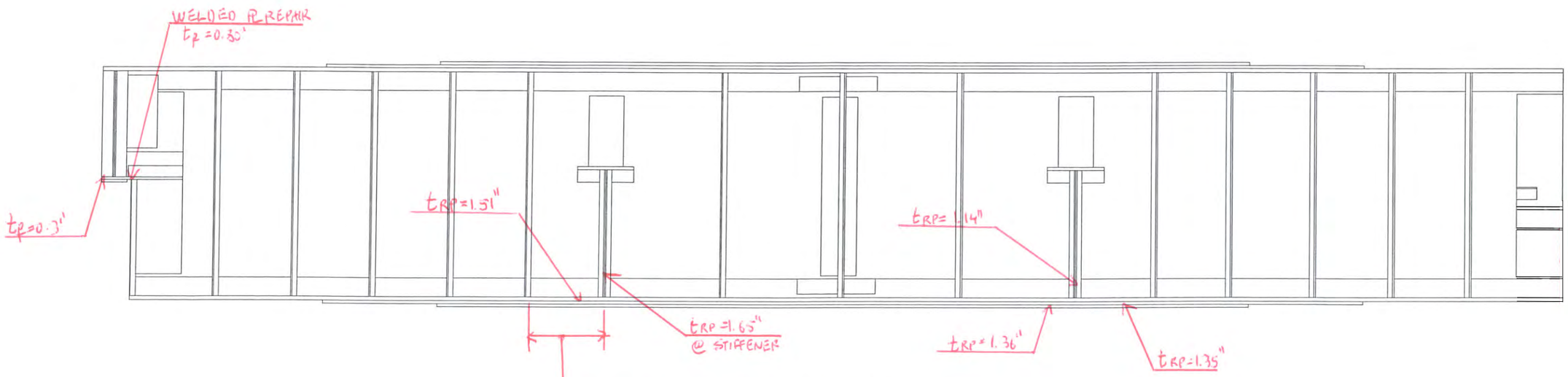

EAST ELEVATION
(LOOKING WEST)

Hoyle, Tanner Associates, Inc.
Consulting Engineers

150 Dow Street.
Manchester, NH 03101–1227
Tel 603–669–5555, Fax 603–669–4168
Web Page: www.hoyletanner.com
© Copyright 2009

SARAH LONG BRIDGE
SPAN 26 EAST GIRDER ELEVATION

INSPECTED BY: JB & EGW	DATE: 6-2-2009	SCALE: 3/16" = 1'–0" H 3/8" = 1'–0" V

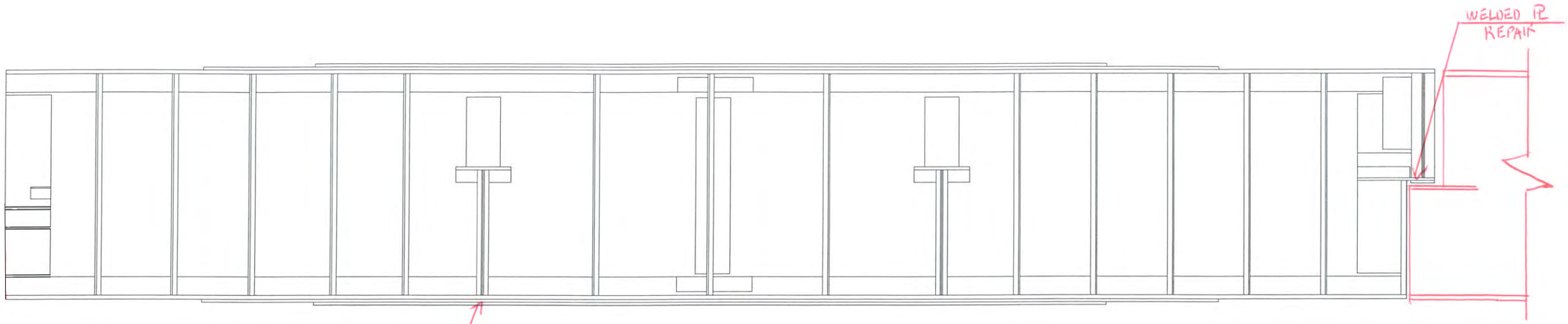

WEST ELEVATION
(LOOKING EAST)

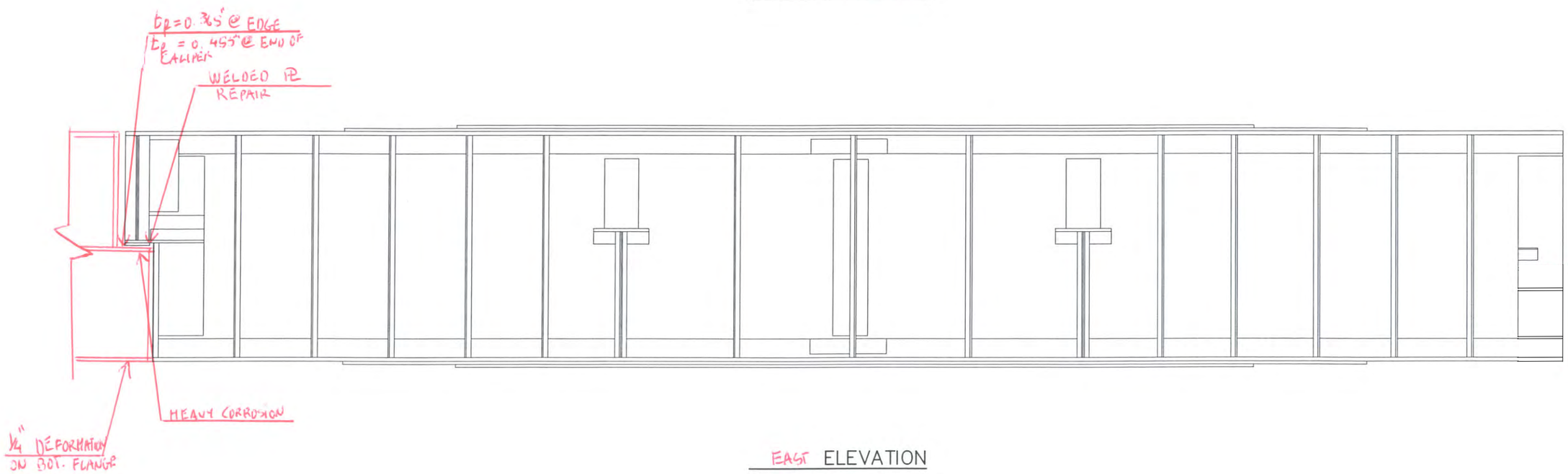

EAST ELEVATION
(LOOKING WEST)

Hoyle, Tanner Associates, Inc.
Consulting Engineers
150 Dow Street.
Manchester, NH 03101–1227
Tel 603–669–5555, Fax 603–669–4168
Web Page: www.hoyletanner.com
© Copyright 2009

SARAH LONG BRIDGE
SPAN 26 WEST GIRDER ELEVATION

INSPECTED BY: JB & EGW	DATE: 6-4-2008	SCALE: 3/16" = 1'-0" H 3/8" = 1'-0" V

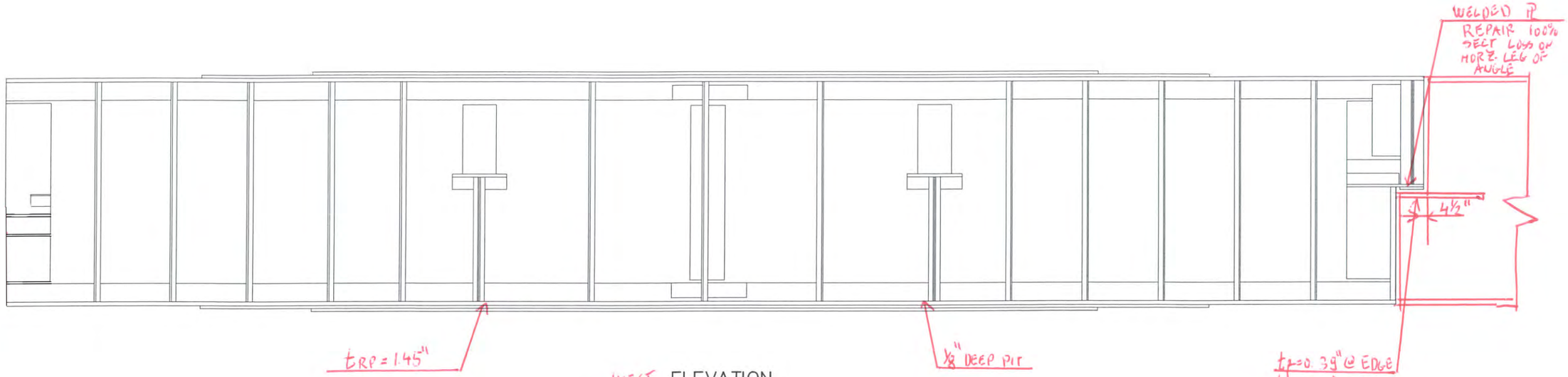

WEST ELEVATION
(LOOKING EAST)

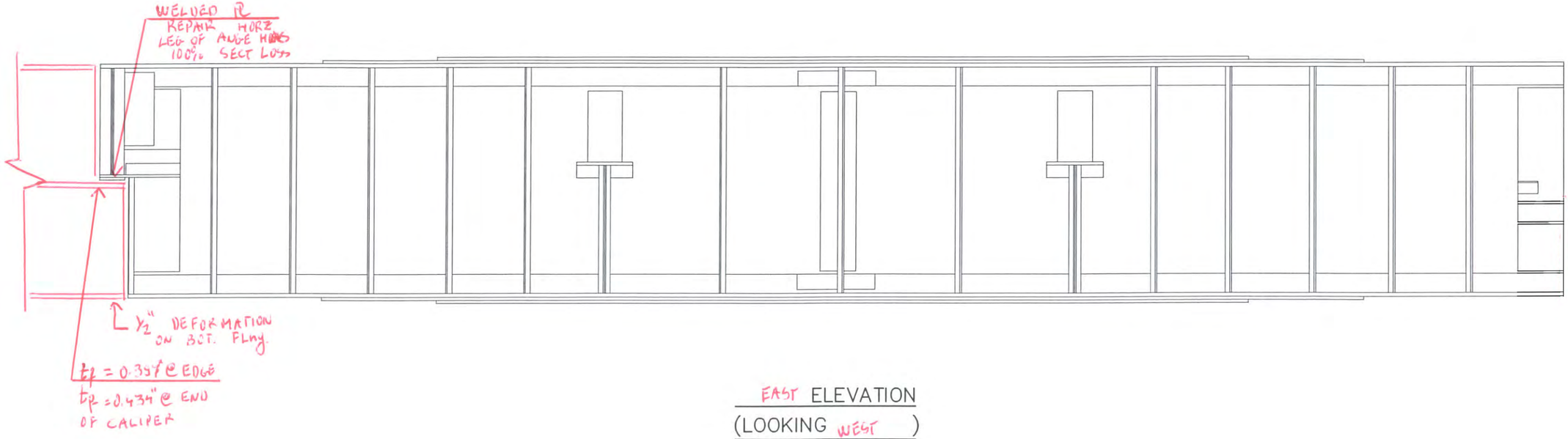

EAST ELEVATION
(LOOKING WEST)

Hoyle, Tanner Associates, Inc.
Consulting Engineers

150 Dow Street.
Manchester, NH 03101-1227
Tel 603-669-5555, Fax 603-669-4168
Web Page: www.hoyletanner.com
© Copyright 2009

SARAH LONG BRIDGE
SPAN 27 WEST GIRDER ELEVATION

INSPECTED BY: JB	DATE:	SCALE: 3/16" = 1'-0" H
EGW		3/8" = 1'-0" V

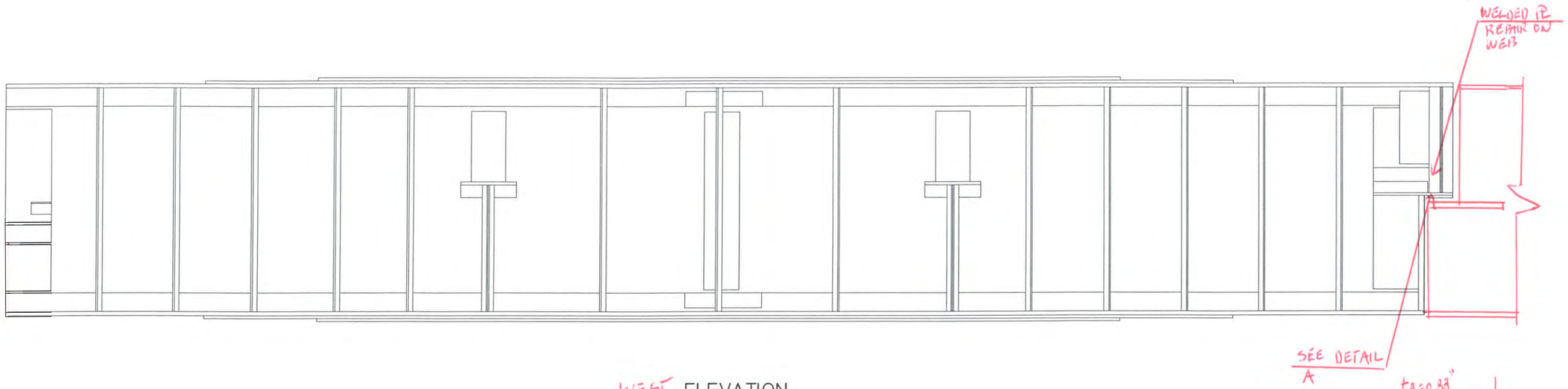

WEST ELEVATION
(LOOKING EAST)

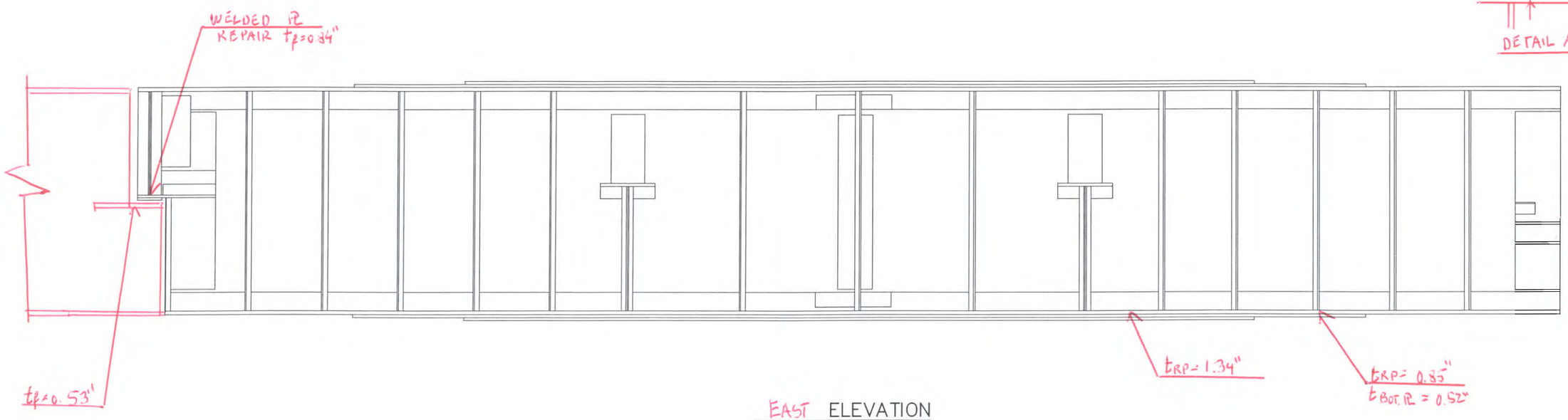

EAST ELEVATION
(LOOKING WEST)

Hoyle, Tanner Associates, Inc.
Consulting Engineers

150 Dow Street.
Manchester, NH 03101-1227
Tel 603-669-5555, Fax 603-669-4168
Web Page: www.hoyletanner.com
© Copyright 2009

SARAH LONG BRIDGE
SPAN 27 EAST GIRDER ELEVATION

INSPECTED BY: JTB & EGW	DATE:	SCALE: 3/16" = 1'-0" H 3/8" = 1'-0" V

Section B:

Floorbeam Condition

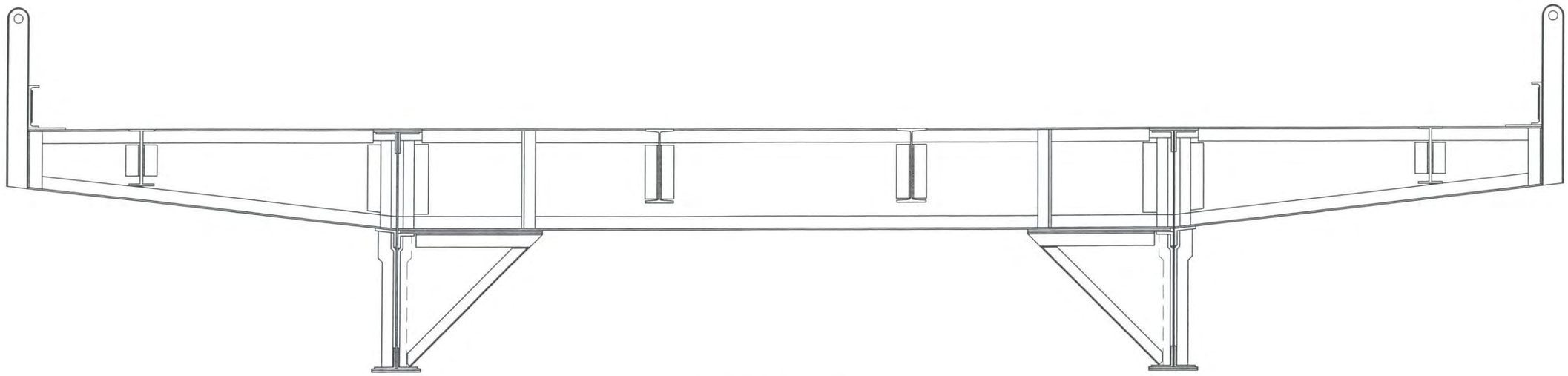

NORTH ELEVATION
(LOOKING SOUTH)

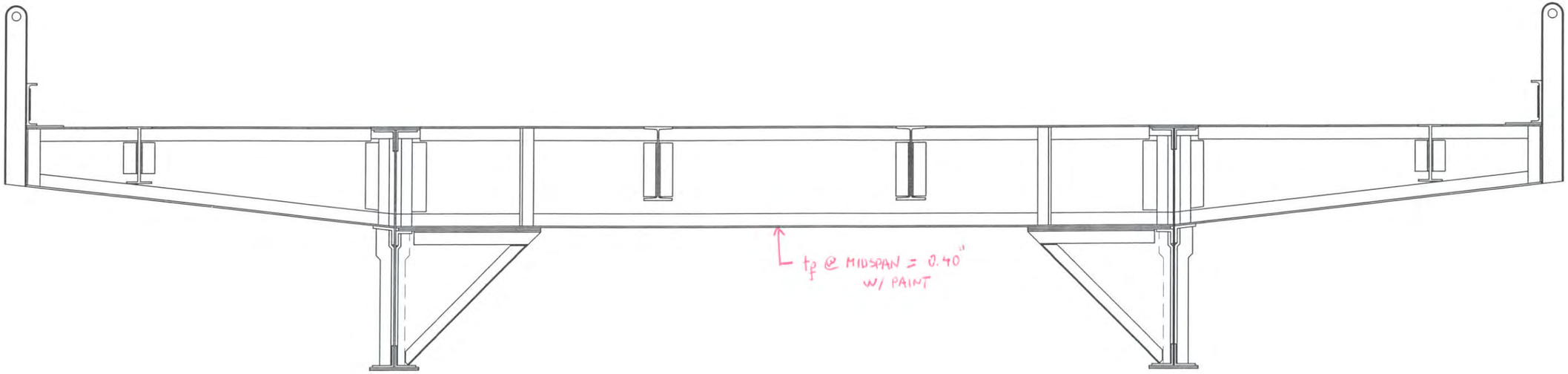

SOUTH ELEVATION
(LOOKING NORTH)

Hoyle, Tanner Associates, Inc.
Consulting Engineers
150 Dow Street.
Manchester, NH 03101–1227
Tel 603–669–5555, Fax 603–669–4168
Web Page: www.hoyletanner.com
© Copyright 2009

SARAH LONG BRIDGE
SPAN 1 FLOOR BEAM 0

INSPECTED BY: JB	DATE: 5-29-2009	SCALE: ⅜" = 1'–0"
EGW	6-5-2009	

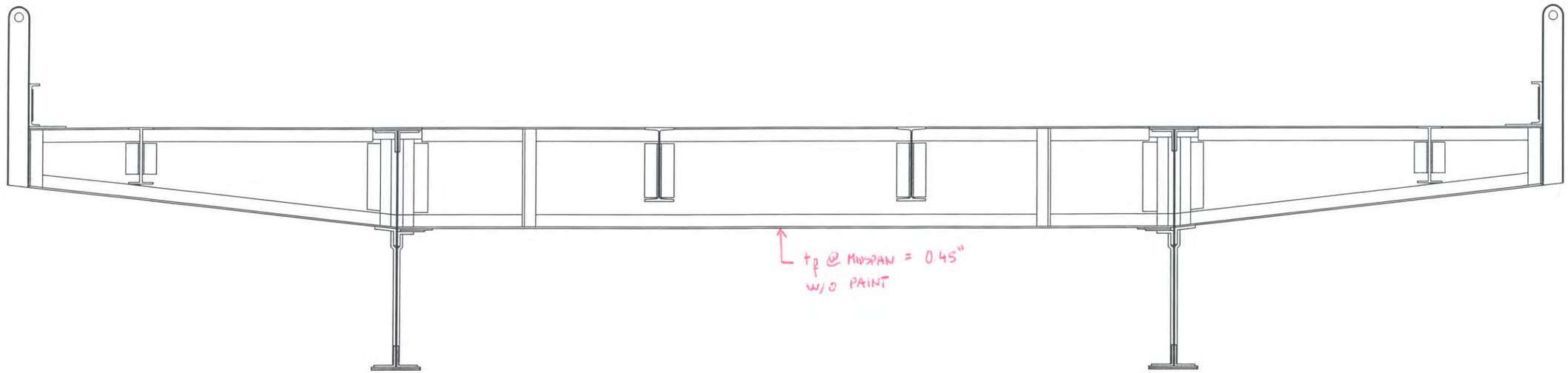

NORTH ELEVATION
(LOOKING SOUTH)

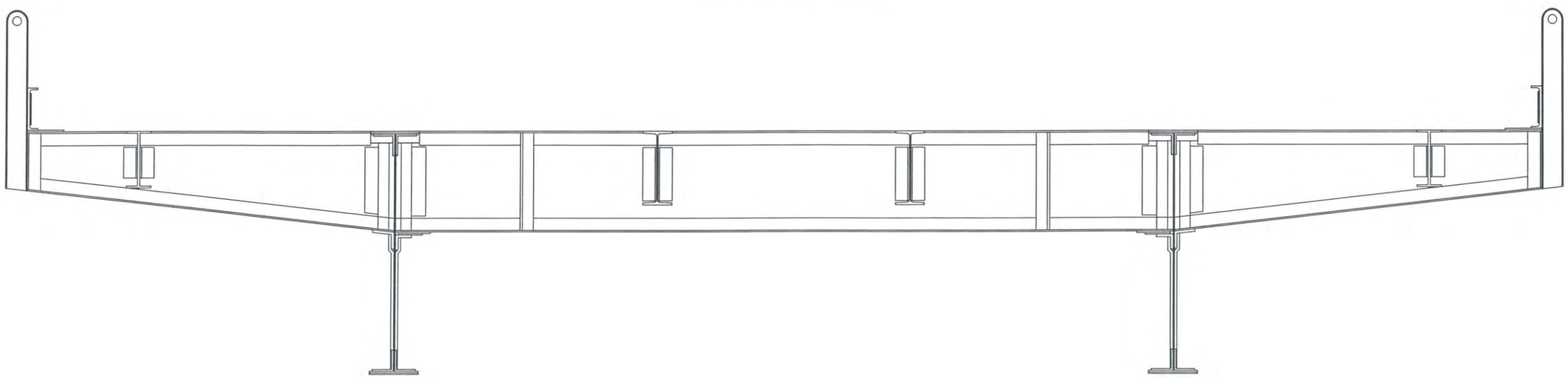

SOUTH ELEVATION
(LOOKING NORTH)

Hoyle, Tanner Associates, Inc.
Consulting Engineers
150 Dow Street.
Manchester, NH 03101-1227
Tel 603-669-5555, Fax 603-669-4168
Web Page: www.hoyletanner.com
© Copyright 2009

SARAH LONG BRIDGE
SPAN 1 FLOOR BEAM 1

INSPECTED BY: JTB	DATE: 2-24-2009	SCALE: ⅜" = 1'-0"
# EGW	6-5-2009	

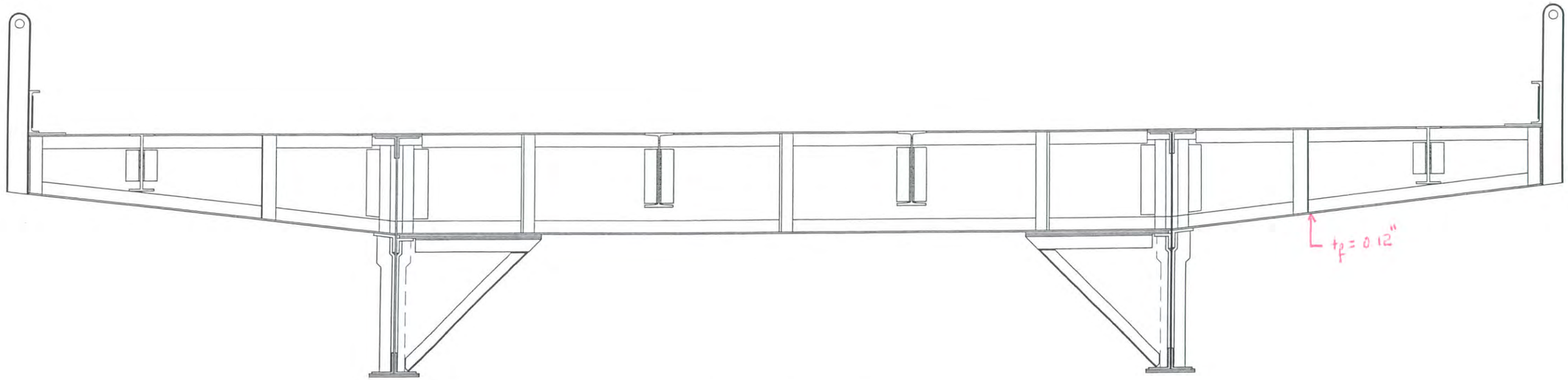

NORTH ELEVATION
(LOOKING SOUTH)

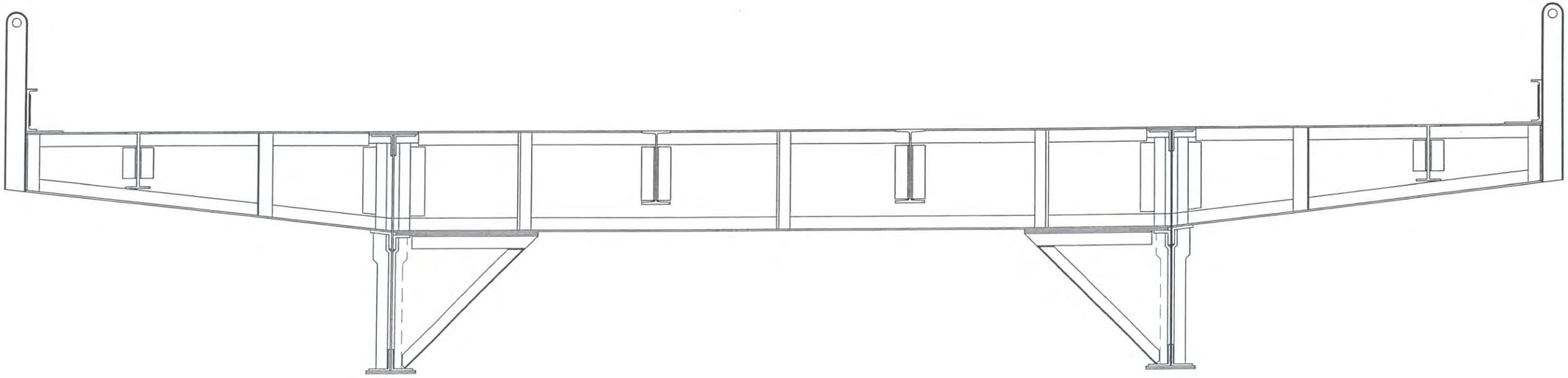

SOUTH ELEVATION
(LOOKING NORTH)

Hoyle, Tanner Associates, Inc.
Consulting Engineers
150 Dow Street.
Manchester, NH 03101-1227
Tel 603-669-5555, Fax 603-669-4168
Web Page: www.hoyletanner.com
© Copyright 2009

SARAH LONG BRIDGE
SPAN 1 FLOOR BEAM 3

INSPECTED BY: JB & EGW	DATE: 5-29-2003 6-5-2003	SCALE: 3/8" = 1'-0"

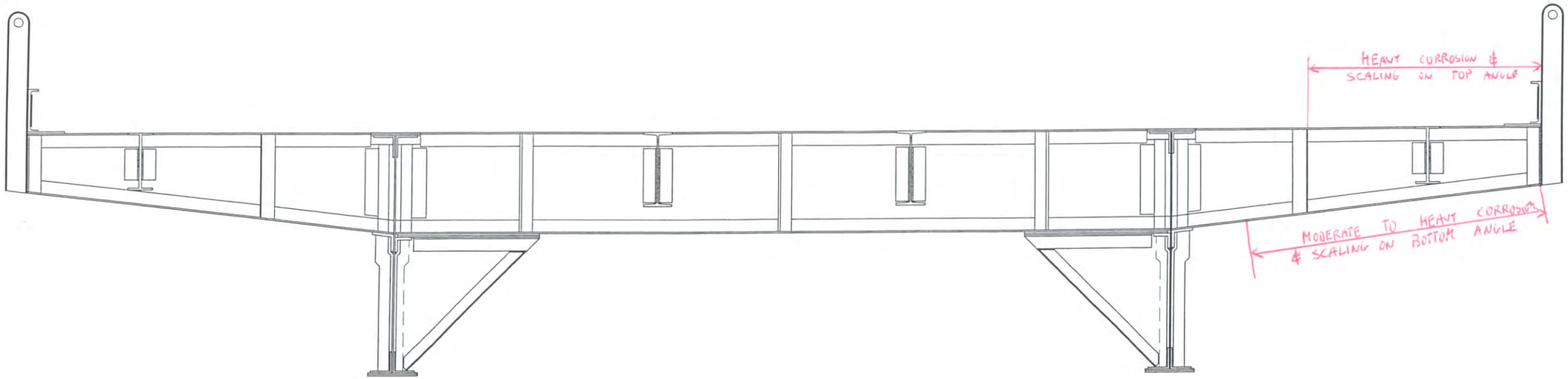

NORTH ELEVATION
(LOOKING SOUTH)

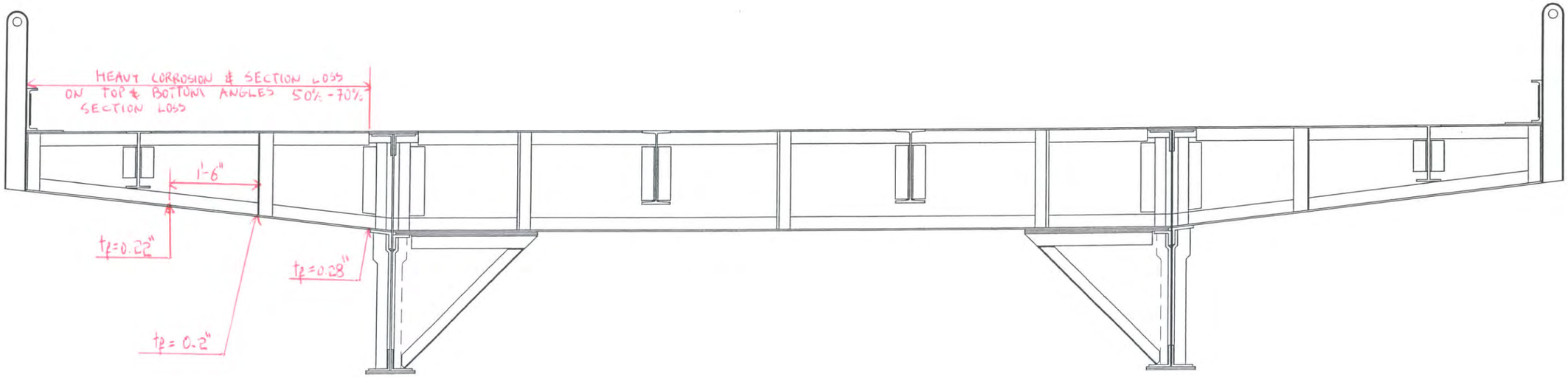

SOUTH ELEVATION
(LOOKING NORTH)

Hoyle, Tanner Associates, Inc.
Consulting Engineers

150 Dow Street,
Manchester, NH 03101-1227
Tel 603-669-5555, Fax 603-669-4168
Web Page: www.hoyletanner.com
© Copyright 2009

SARAH LONG BRIDGE
SPAN 2 FLOOR BEAM 0

INSPECTED BY: JB & FGW	DATE: 5-29-2009 6-5-2009	SCALE: 3/8" = 1'-0"

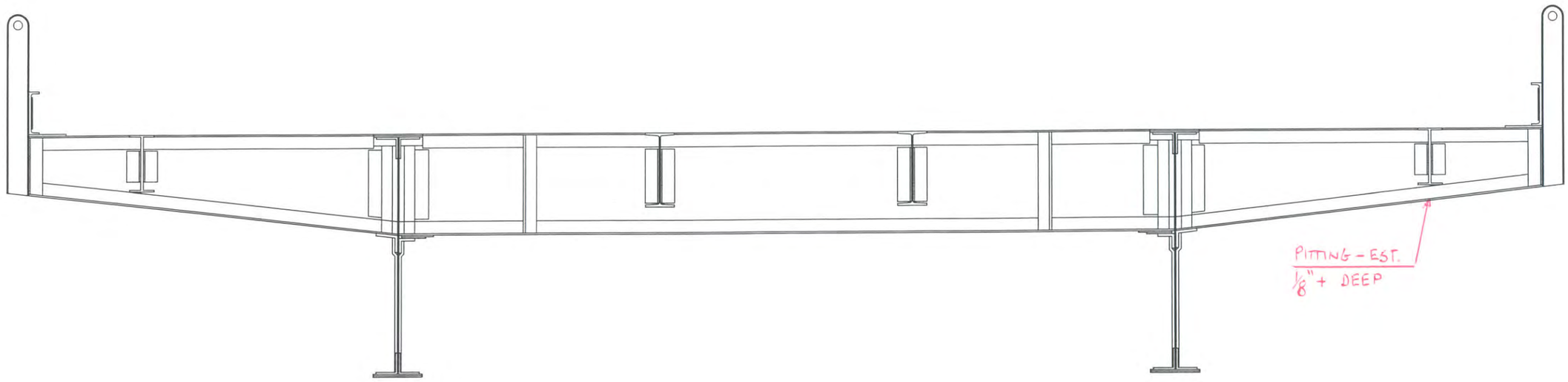

NORTH ELEVATION
(LOOKING SOUTH)

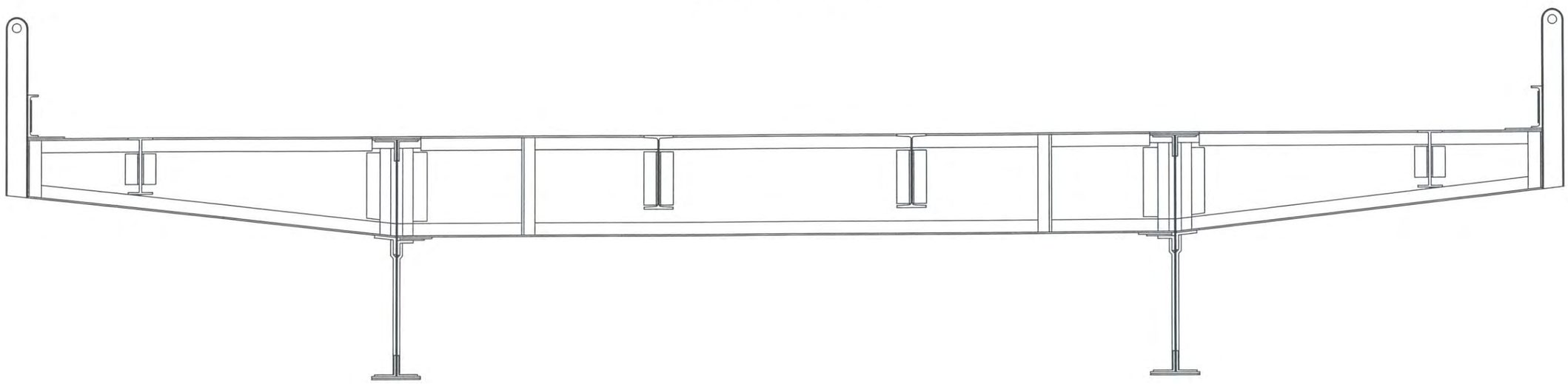

SOUTH ELEVATION
(LOOKING NORTH)

Hoyle, Tanner Associates, Inc.
Consulting Engineers
150 Dow Street.
Manchester, NH 03101-1227
Tel 603-669-5555, Fax 603-669-4168
Web Page: www.hoyletanner.com
© Copyright 2009

SARAH LONG BRIDGE
SPAN 2 FLOOR BEAM 1

INSPECTED BY: JB	DATE: 5-29-2009	SCALE: 3/8" = 1'-0"
& EGW	6-5-2009	

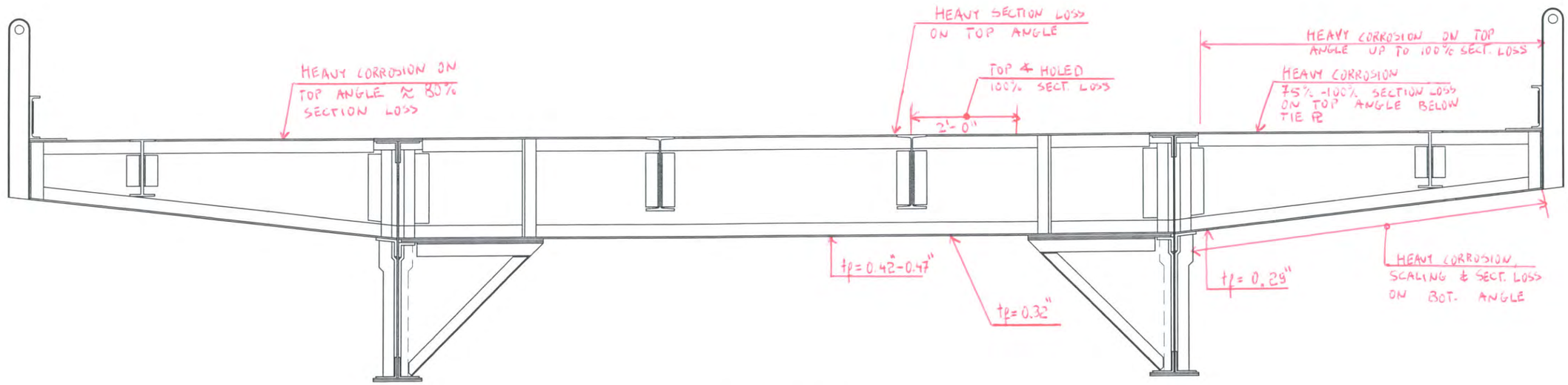

NORTH ELEVATION
(LOOKING SOUTH)

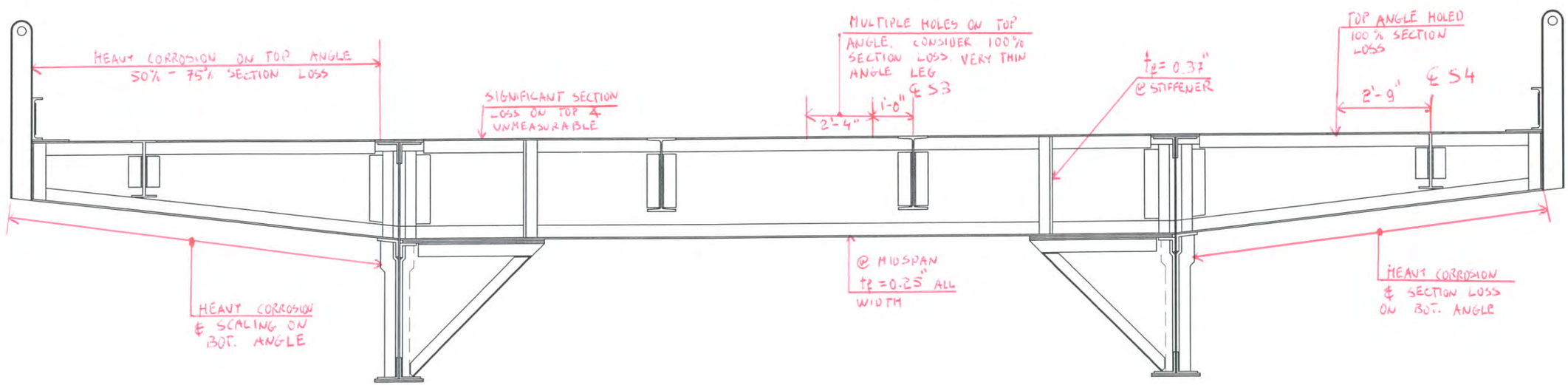

SOUTH ELEVATION
(LOOKING NORTH)

Hoyle, Tanner & Associates, Inc.
Consulting Engineers
150 Dow Street.
Manchester, NH 03101-1227
Tel 603-669-5555, Fax 603-669-4168
Web Page: www.hoyletanner.com
© Copyright 2009

SARAH LONG BRIDGE
SPAN 2 FLOOR BEAM 3

INSPECTED BY: JB	DATE: 5-29-2009	SCALE: ⅜" = 1'-0"
& EGW	6-5-2009	

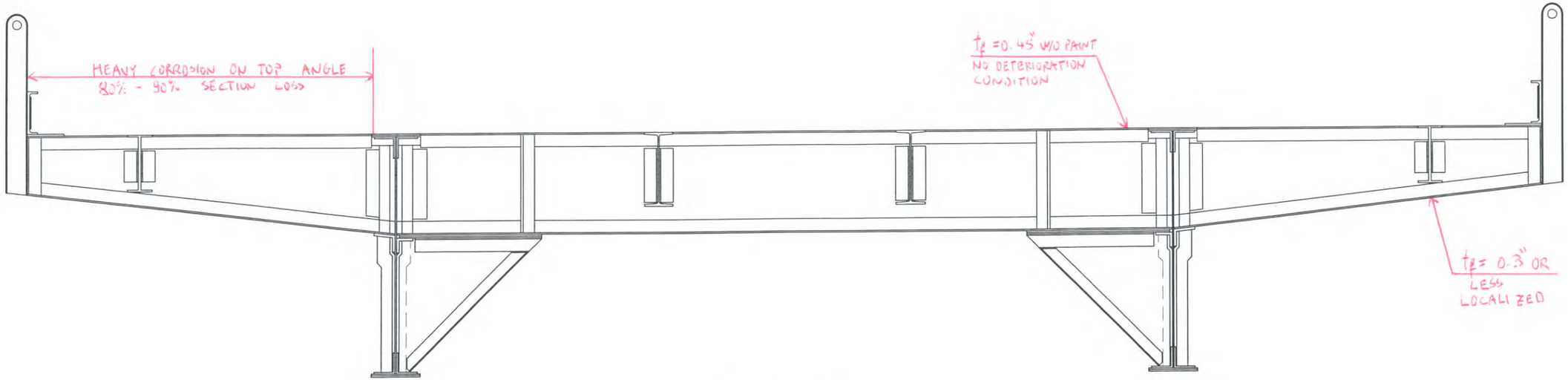

NORTH ELEVATION
(LOOKING SOUTH)

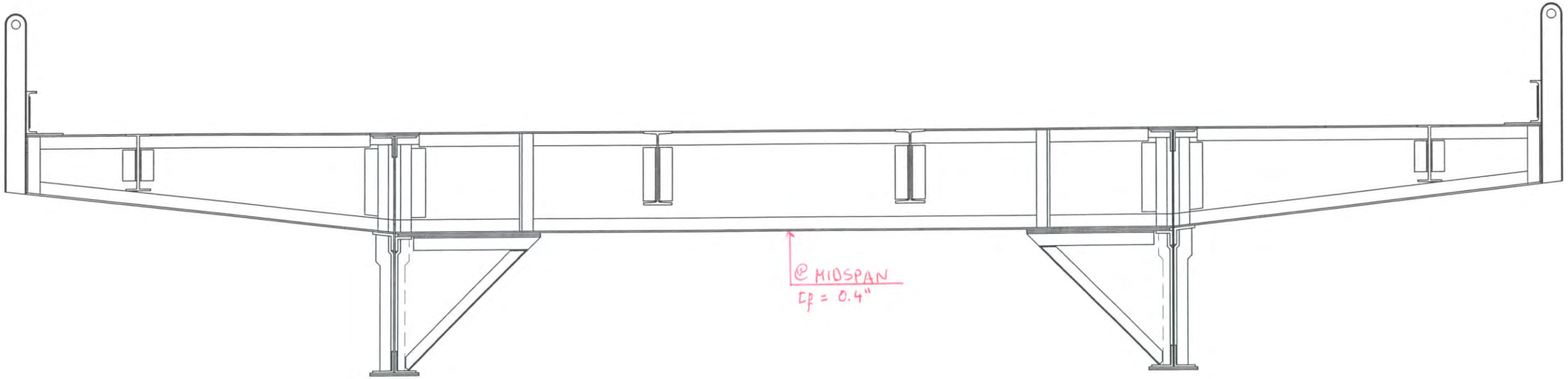

SOUTH ELEVATION
(LOOKING NORTH)

Hoyle, Tanner Associates, Inc.
Consulting Engineers

150 Dow Street.
Manchester, NH 03101–1227
Tel 603–669–5555, Fax 603–669–4168
Web Page: www.hoyletanner.com
© Copyright 2009

SARAH LONG BRIDGE
SPAN 3 FLOOR BEAM 0

INSPECTED BY: JB & EGW	DATE: 5-29-2009 6-5-2009	SCALE: ⅜" = 1'–0"

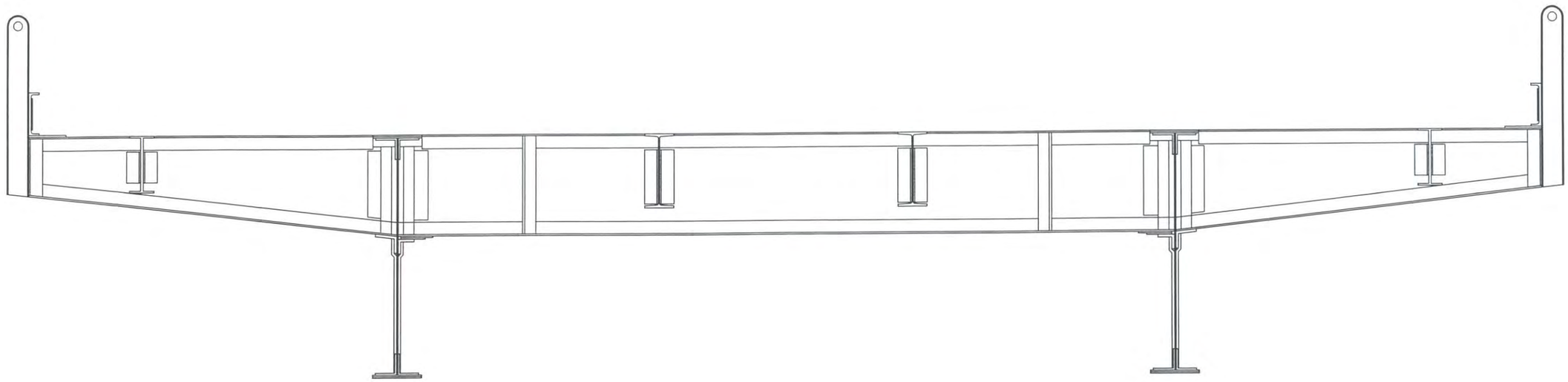

NORTH ELEVATION
(LOOKING SOUTH)

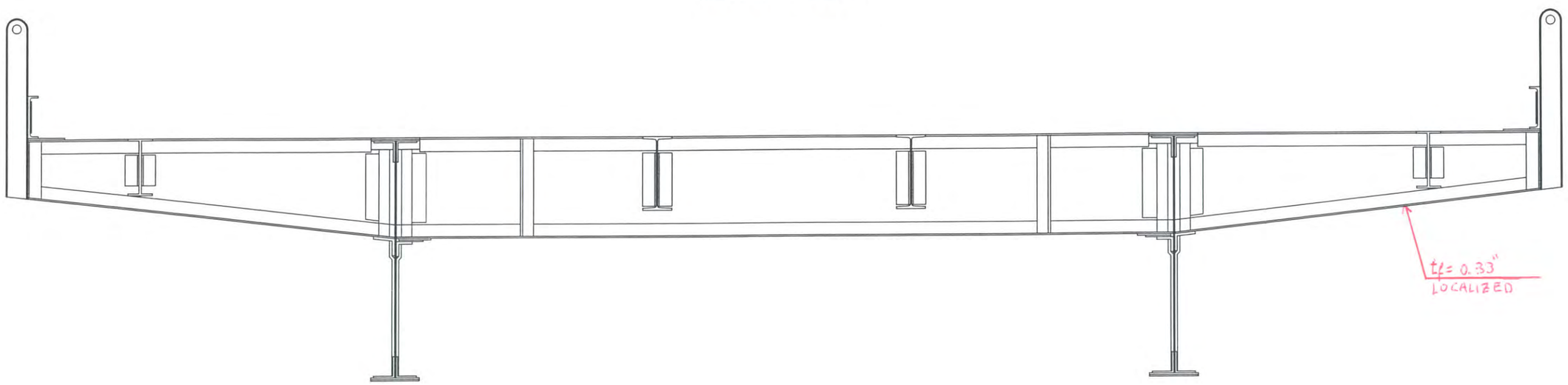

SOUTH ELEVATION
(LOOKING NORTH)

Hoyle, Tanner Associates, Inc.
Consulting Engineers

150 Dow Street.
Manchester, NH 03101-1227
Tel 603-669-5555, Fax 603-669-4168
Web Page: www.hoyletanner.com
© Copyright 2009

SARAH LONG BRIDGE
SPAN 3 FLOOR BEAM 2

INSPECTED BY: JB	DATE: 6-5-2009	SCALE: 3/8" = 1'-0"
#EGW		

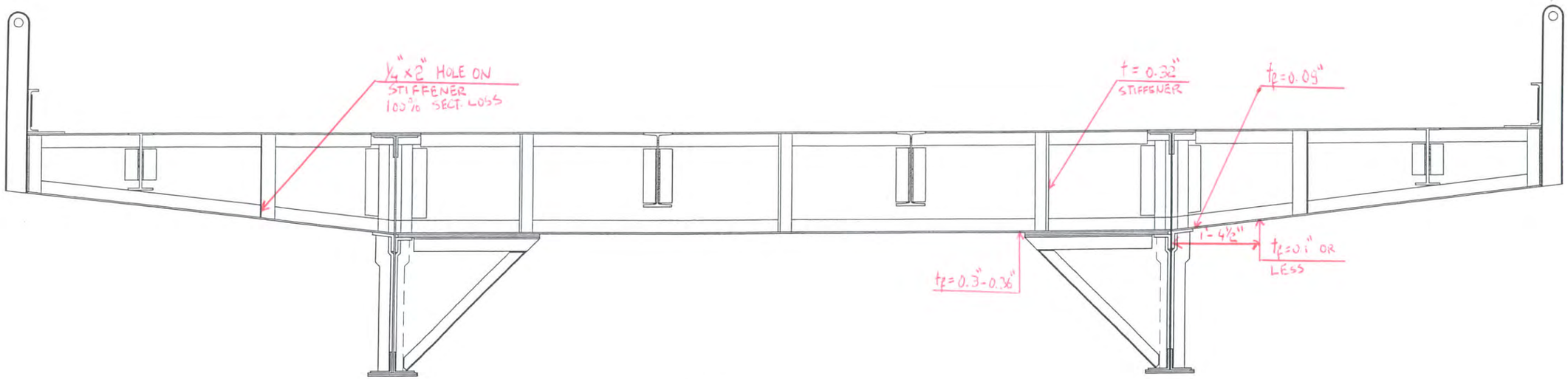

NORTH ELEVATION
(LOOKING SOUTH)

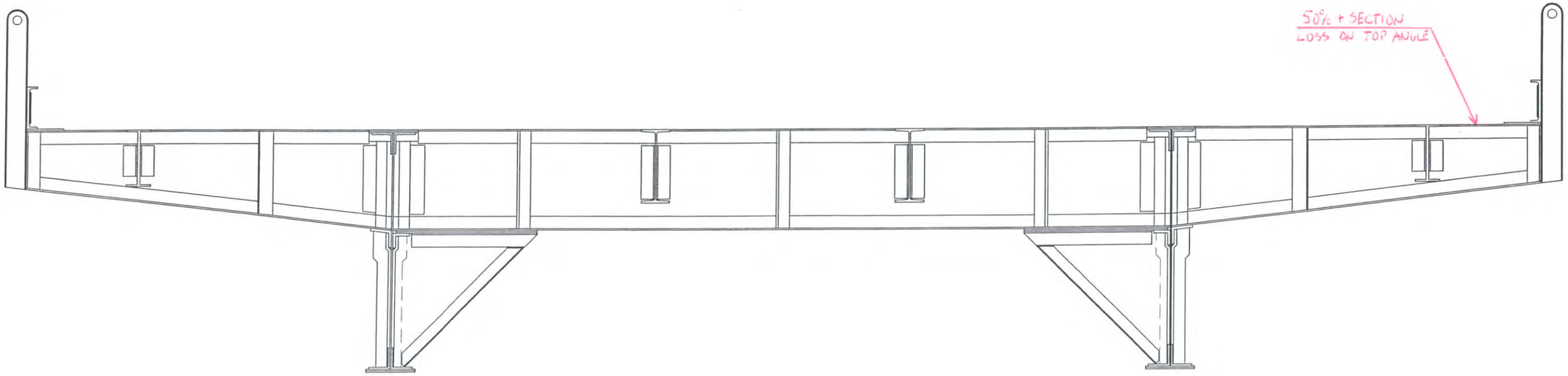

SOUTH ELEVATION
(LOOKING NORTH)

Hoyle, Tanner & Associates, Inc.
Consulting Engineers

150 Dow Street,
Manchester, NH 03101-1227
Tel 603-669-5555, Fax 603-669-4168
Web Page: www.hoyletanner.com
© Copyright 2009

SARAH LONG BRIDGE
SPAN 3 FLOOR BEAM 3

INSPECTED BY: JB	DATE: 5-24-2009	SCALE: 3/8" = 1'-0"
# EGW	6-5-2009	

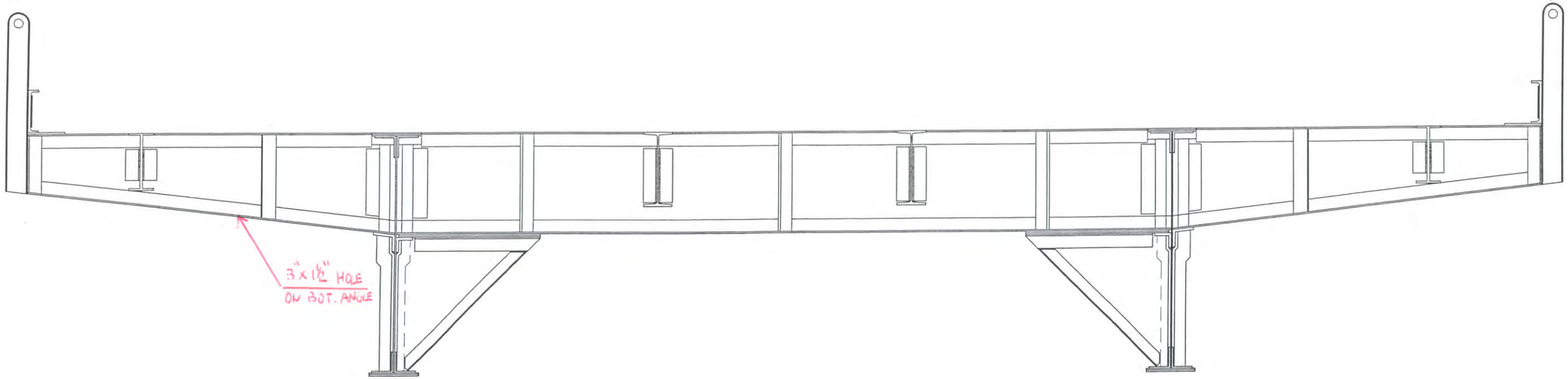

NORTH ELEVATION
(LOOKING SOUTH)

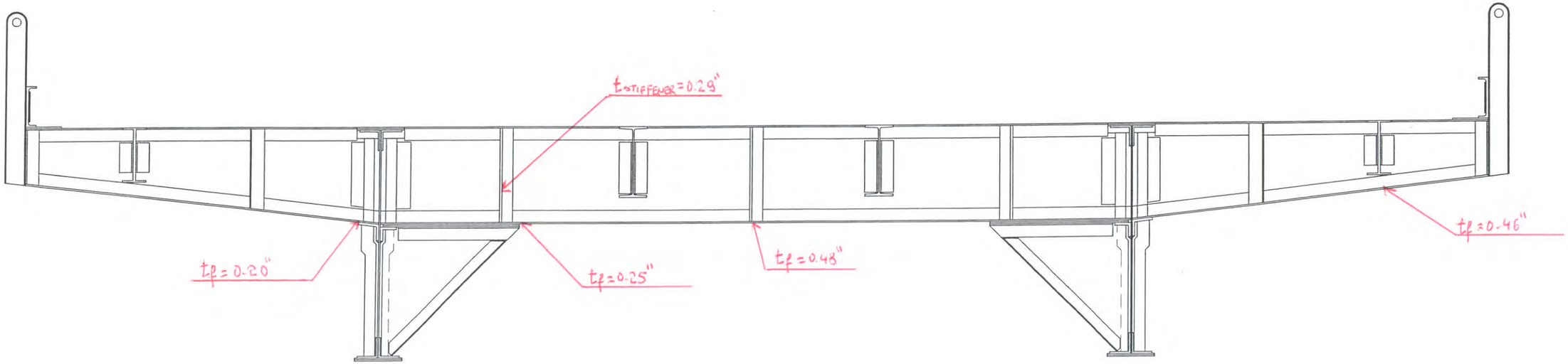

SOUTH ELEVATION
(LOOKING NORTH)

Hoyle, Tanner Associates, Inc.
Consulting Engineers

150 Dow Street
Manchester, NH 03101-1227
Tel 603-669-5555, Fax 603-669-4168
Web Page: www.hoyletanner.com
© Copyright 2009

SARAH LONG BRIDGE
SPAN 4 FLOOR BEAM 0

INSPECTED BY: JEB & EGW	DATE: 5-29-2009 6-5-2009	SCALE: ⅛" = 1'-0"

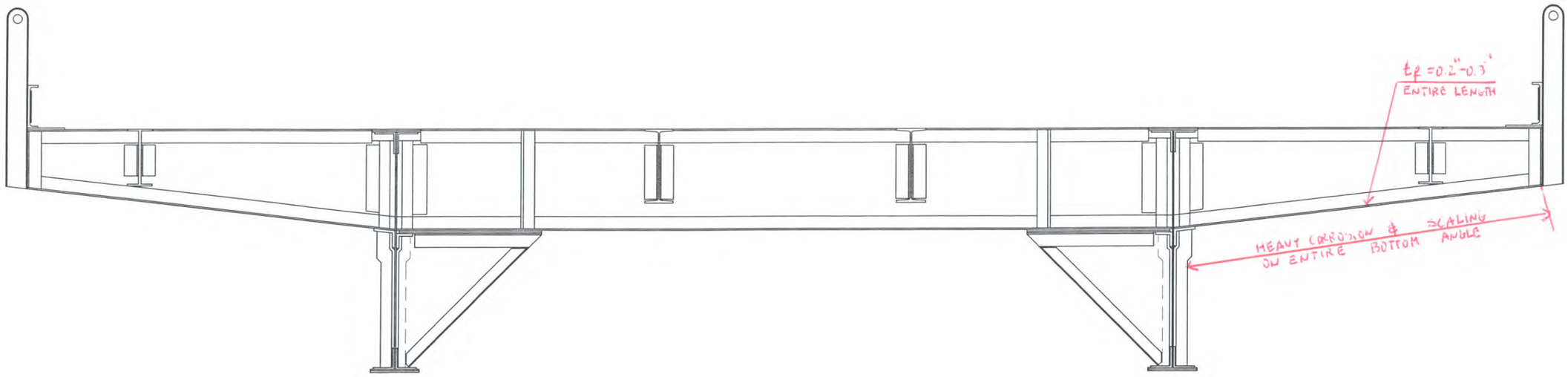

NORTH ELEVATION
(LOOKING SOUTH)

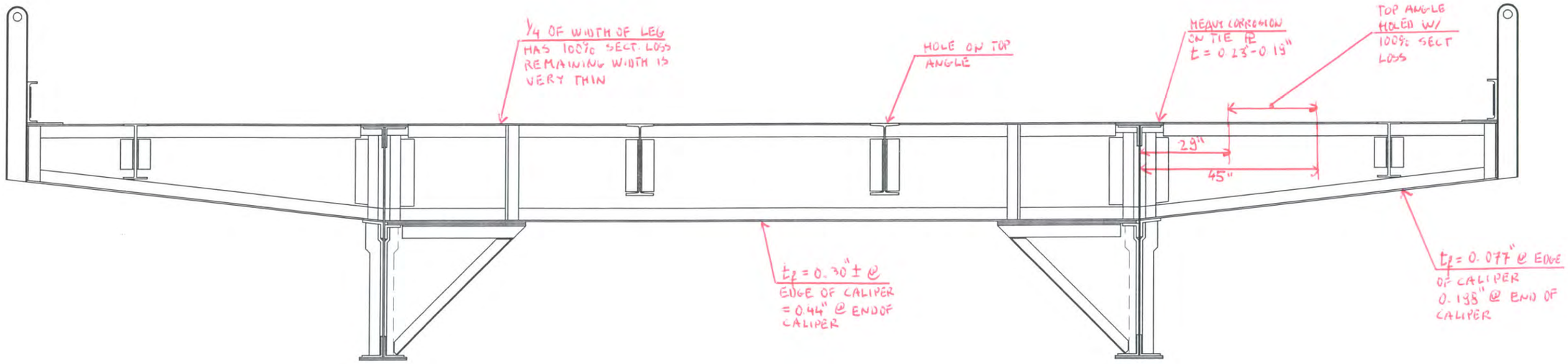

SOUTH ELEVATION
(LOOKING NORTH)

Hoyle, Tanner Associates, Inc.
Consulting Engineers
150 Dow Street
Manchester, NH 03101-1227
Tel 603-669-5555, Fax 603-669-4168
Web Page: www.hoyletanner.com
© Copyright 2009

SARAH LONG BRIDGE
SPAN 4 FLOOR BEAM 3

INSPECTED BY: JB	DATE: 5-29-2009	SCALE: 3/8" = 1'-0"
JEGW	6-5-2009	

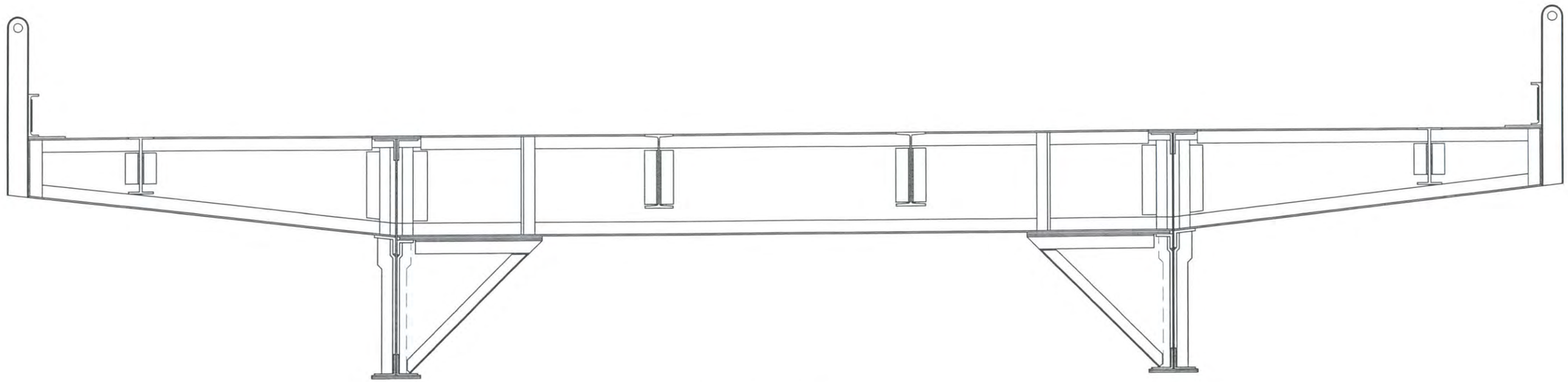

NORTH ELEVATION
(LOOKING SOUTH)

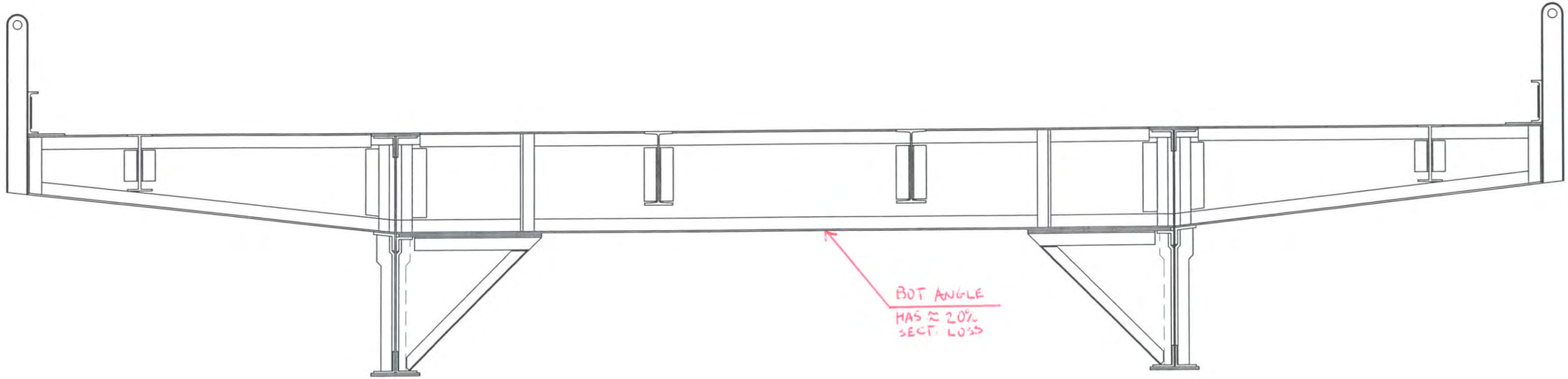

SOUTH ELEVATION
(LOOKING NORTH)

Hoyle, Tanner & Associates, Inc.
Consulting Engineers

150 Dow Street.
Manchester, NH 03101-1227
Tel 603-669-5555, Fax 603-669-4168
Web Page: www.hoyletanner.com
© Copyright 2009

SARAH LONG BRIDGE
SPAN 5 FLOOR BEAM 0

INSPECTED BY: JB & EGW	DATE: 5-29-2003 6-5-2003	SCALE: 3/8" = 1'-0"

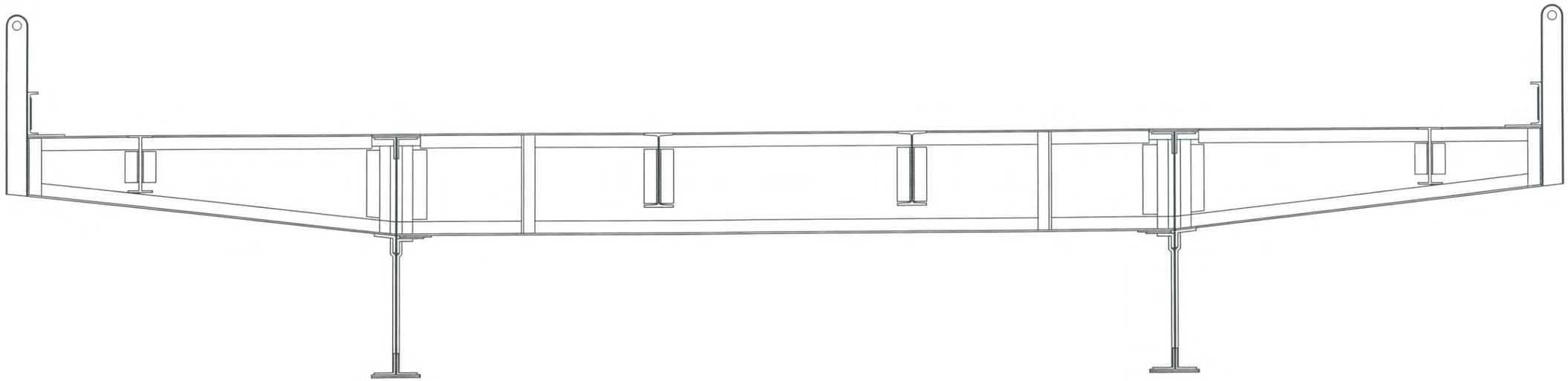

NORTH ELEVATION
(LOOKING SOUTH)

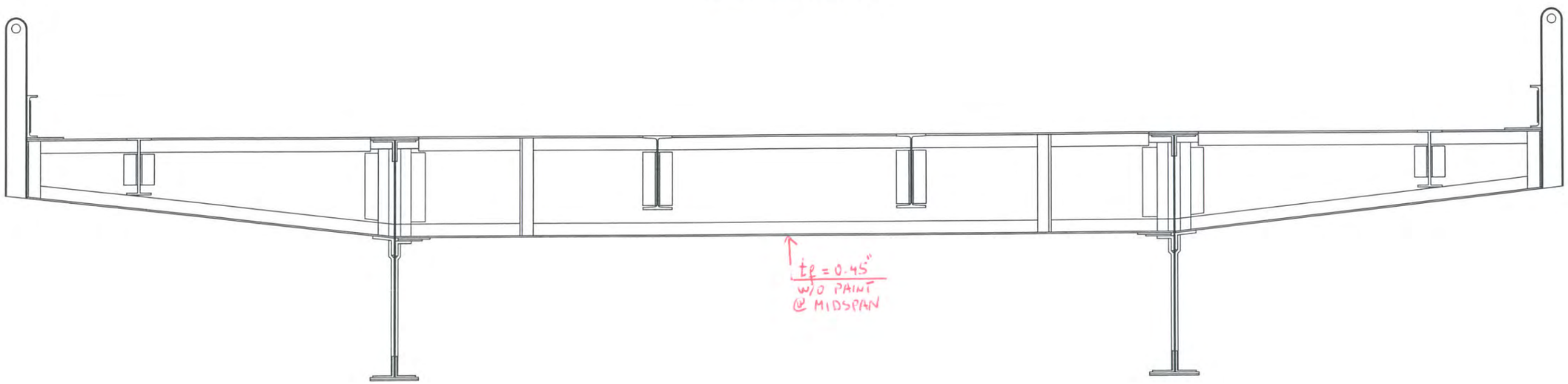

SOUTH ELEVATION
(LOOKING NORTH)

Hoyle, Tanner Associates, Inc.
Consulting Engineers
150 Dow Street.
Manchester, NH 03101-1227
Tel 603-669-5555, Fax 603-669-4168
Web Page: www.hoyletanner.com
© Copyright 2009

SARAH LONG BRIDGE
SPAN 5 FLOOR BEAM 2

INSPECTED BY: JB	DATE: 5-29-2009	SCALE: 3/8" = 1'-0"
& EGW	6-5-2009	

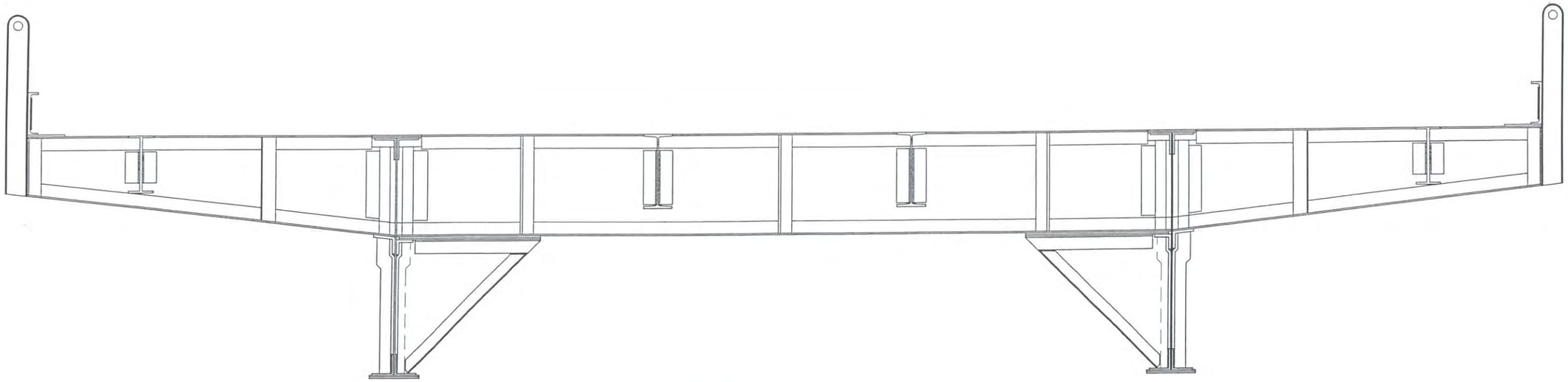

SOUTH ELEVATION
(LOOKING NORTH)

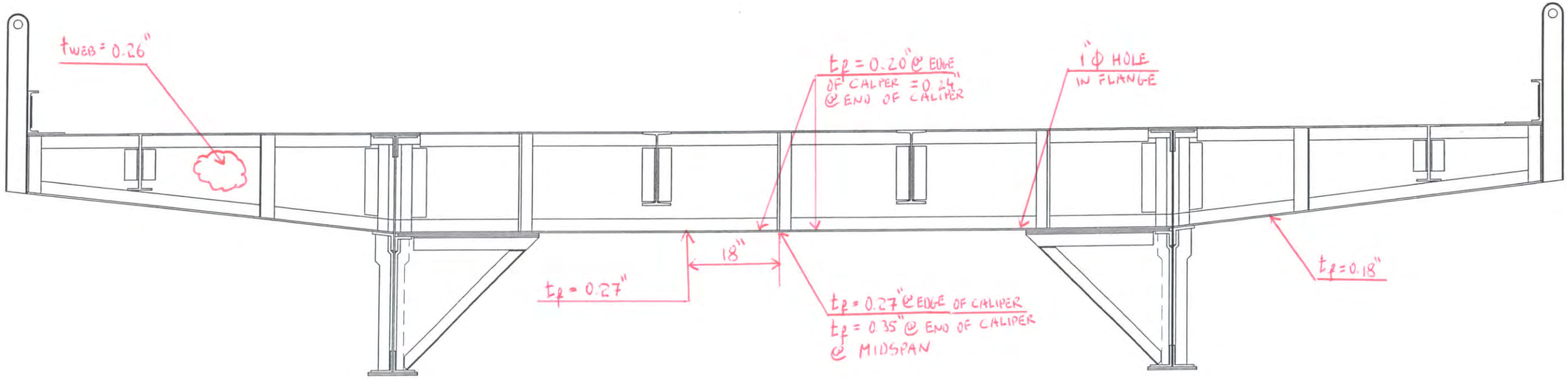

NORTH ELEVATION
(LOOKING SOUTH)

Hoyle, Tanner & Associates, Inc.
Consulting Engineers
150 Dow Street.
Manchester, NH 03101-1227
Tel 603-669-5555, Fax 603-669-4168
Web Page: www.hoyletanner.com

© Copyright 2009

SARAH LONG BRIDGE
SPAN 5 FLOOR BEAM 3

INSPECTED BY: JB & EGW	DATE: 5-29-2009 6-5-2009	SCALE: 3/8" = 1'-0"

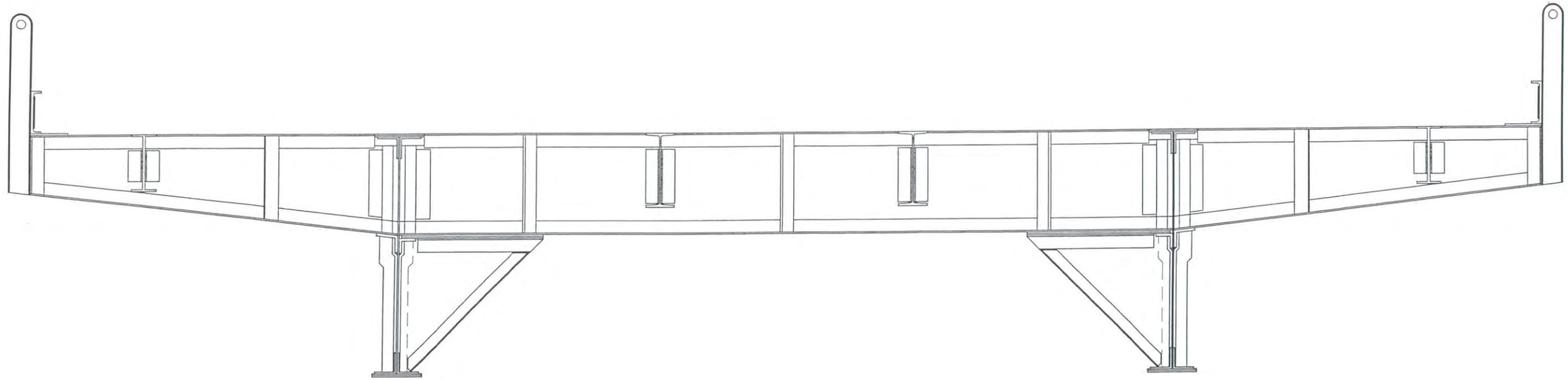

NORTH ELEVATION
(LOOKING SOUTH)

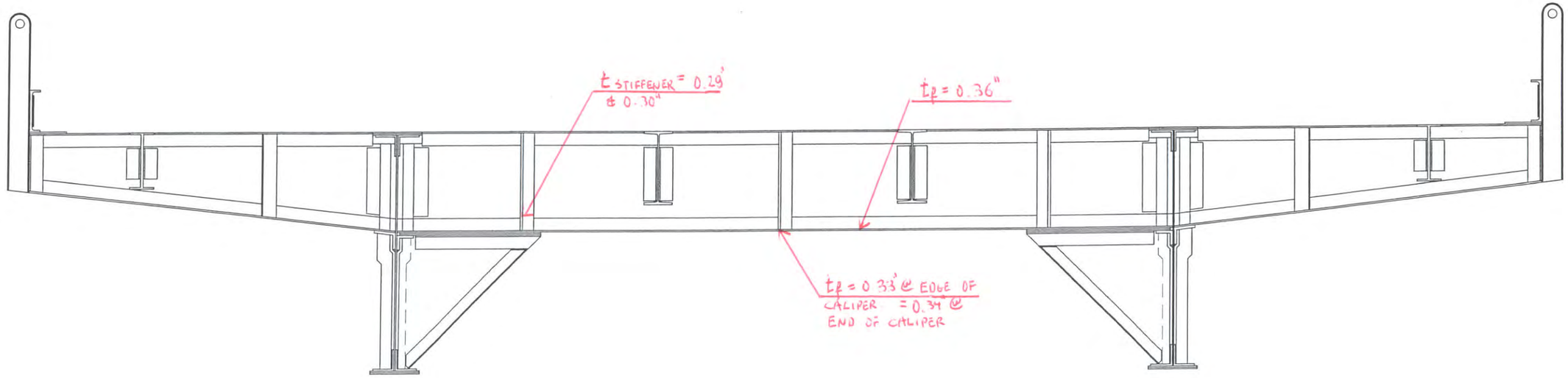

SOUTH ELEVATION
(LOOKING NORTH)

Hoyle, Tanner Associates, Inc.
Consulting Engineers

150 Dow Street.
Manchester, NH 03101-1227
Tel 603-669-5555, Fax 603-669-4168
Web Page: www.hoyletanner.com
© Copyright 2009

SARAH LONG BRIDGE
SPAN 6 FLOOR BEAM 0

INSPECTED BY: JB & EGW	DATE:	SCALE: 3/8" = 1'-0"

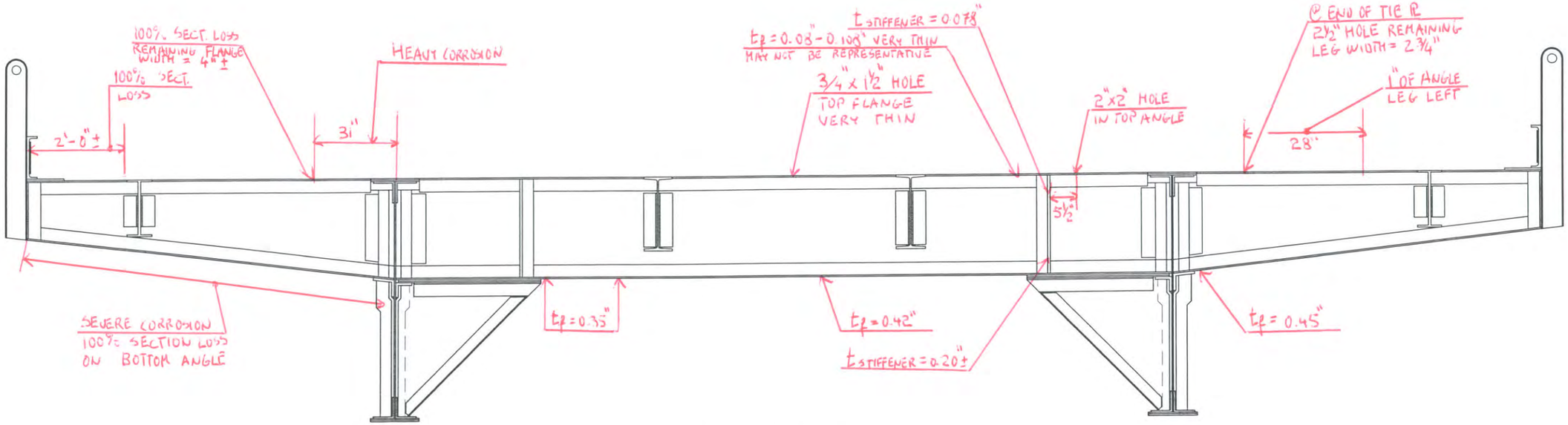

NORTH ELEVATION
(LOOKING SOUTH)

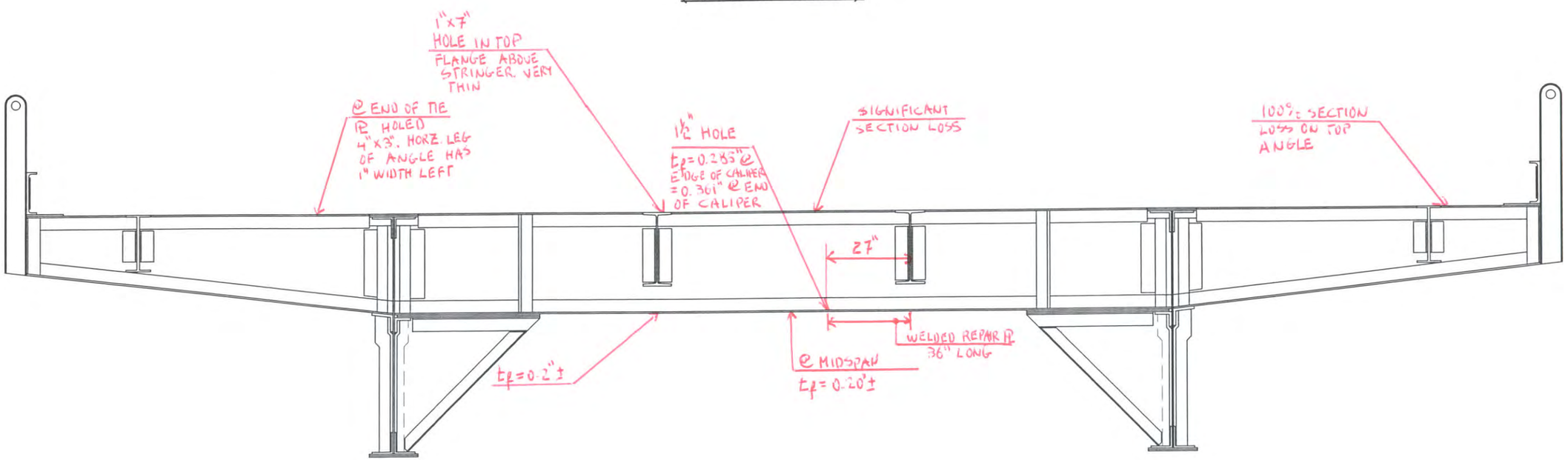

SOUTH ELEVATION
(LOOKING NORTH)

Hoyle, Tanner & Associates, Inc.
Consulting Engineers
150 Dow Street.
Manchester, NH 03101-1227
Tel 603-669-5555, Fax 603-669-4168
Web Page: www.hoyletanner.com
© Copyright 2009

SARAH LONG BRIDGE
SPAN 6 FLOOR BEAM 3

INSPECTED BY: JB & EGW	DATE:	SCALE: 3/8" = 1'-0"

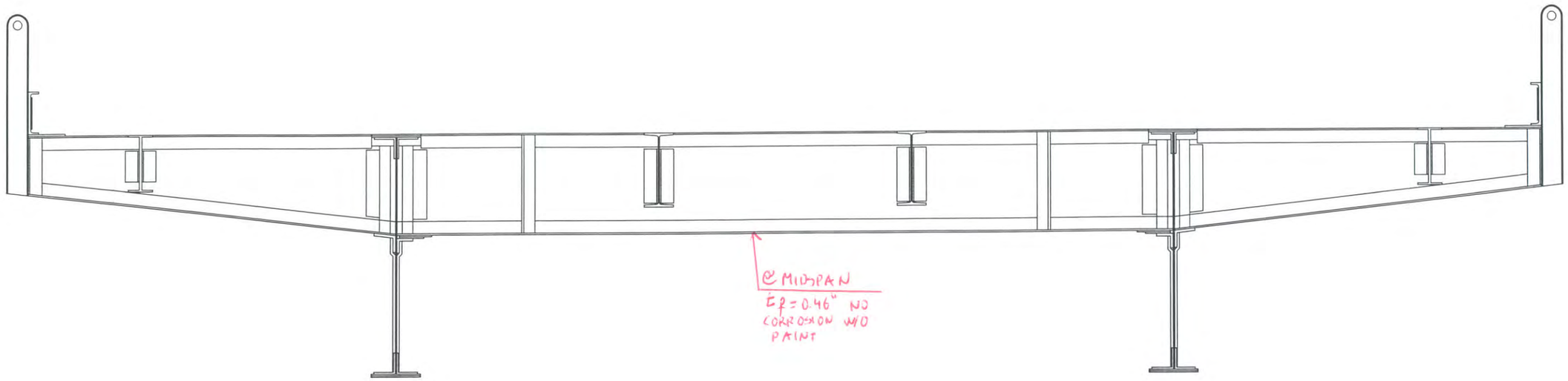

NORTH ELEVATION
(LOOKING SOUTH)

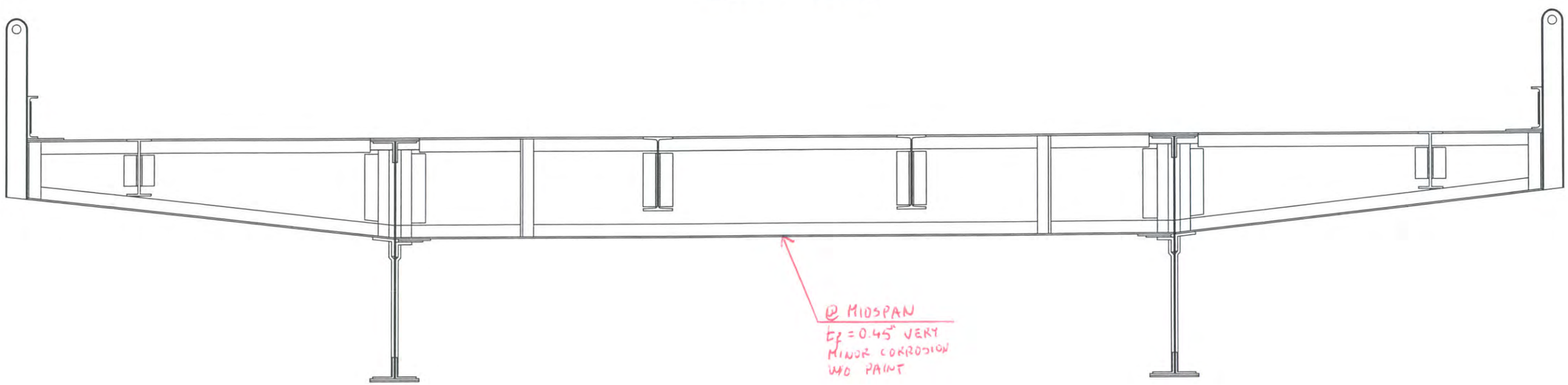

SOUTH ELEVATION
(LOOKING NORTH)

Hoyle, Tanner Associates, Inc.
Consulting Engineers
150 Dow Street.
Manchester, NH 03101-1227
Tel 603-669-5555, Fax 603-669-4168
Web Page: www.hoyletanner.com
© Copyright 2009

SARAH LONG BRIDGE
SPAN 7 FLOOR BEAM 2

INSPECTED BY: JB	DATE:	SCALE: 3/8" = 1'-0"
& EGW		

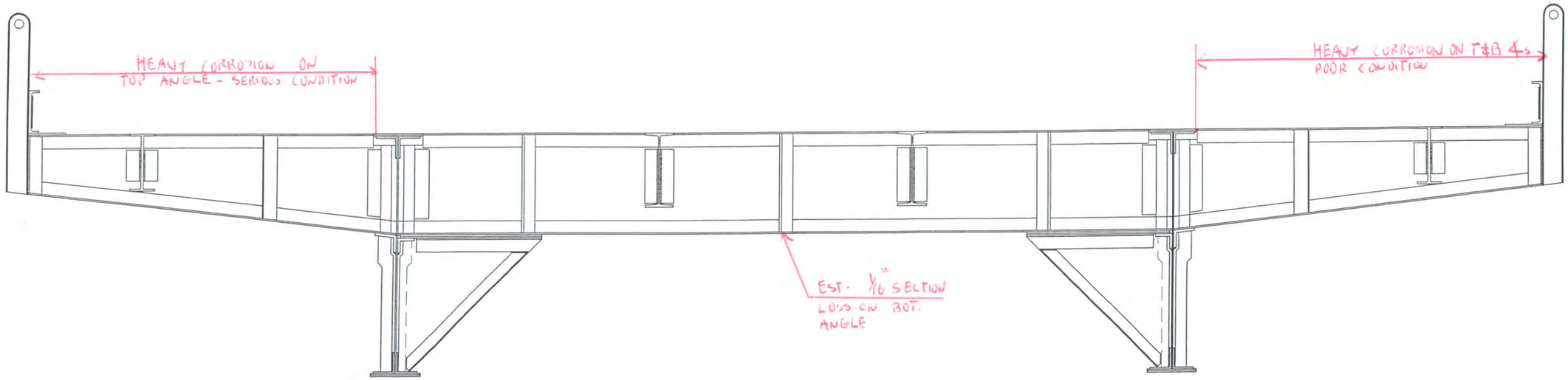

NORTH ELEVATION
(LOOKING SOUTH)

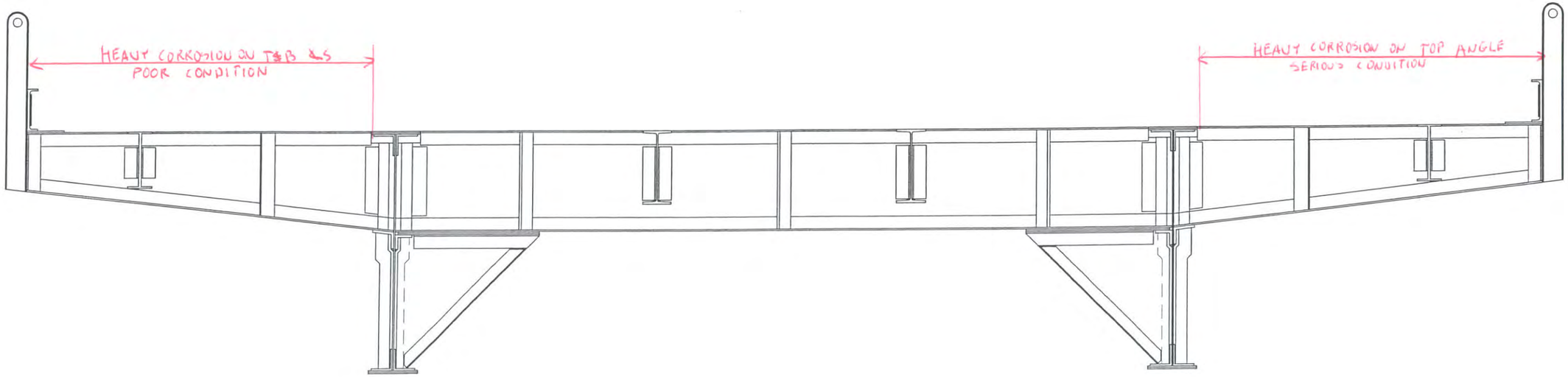

SOUTH ELEVATION
(LOOKING NORTH)

Hoyle, Tanner & Associates, Inc.
Consulting Engineers
150 Dow Street
Manchester, NH 03101-1227
Tel 603-669-5555, Fax 603-669-4168
Web Page: www.hoyletanner.com
© Copyright 2009

SARAH LONG BRIDGE
SPAN 7 FLOOR BEAM 3

INSPECTED BY: JB & EGW	DATE: 6-1-2009 6-2-2009	SCALE: 3/8" = 1'-0"

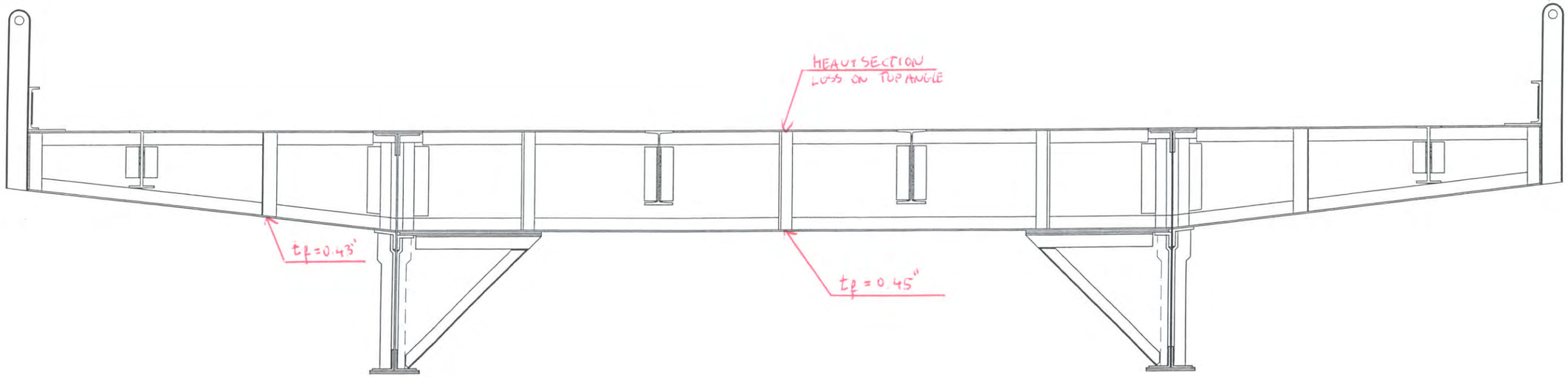

NORTH ELEVATION
(LOOKING SOUTH)

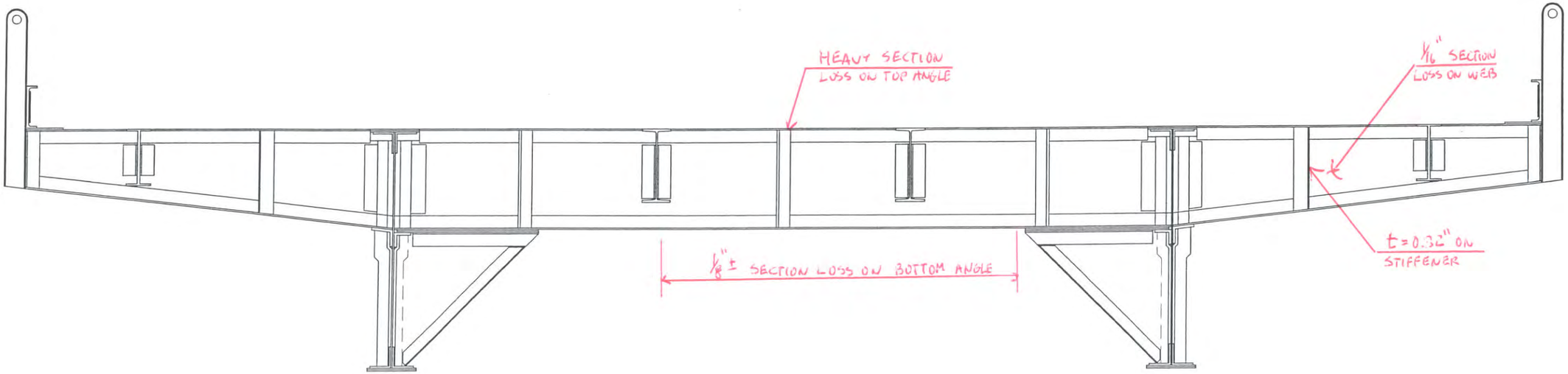

SOUTH ELEVATION
(LOOKING NORTH)

Hoyle, Tanner Associates, Inc.
Consulting Engineers
150 Dow Street.
Manchester, NH 03101-1227
Tel 603-669-5555, Fax 603-669-4168
Web Page: www.hoyletanner.com
© Copyright 2009

SARAH LONG BRIDGE
SPAN 8 FLOOR BEAM 0

INSPECTED BY: JB	DATE: 6-2-2004	SCALE: 1/8" = 1'-0"
BEGW	6-3-2004, 6-1-2004	

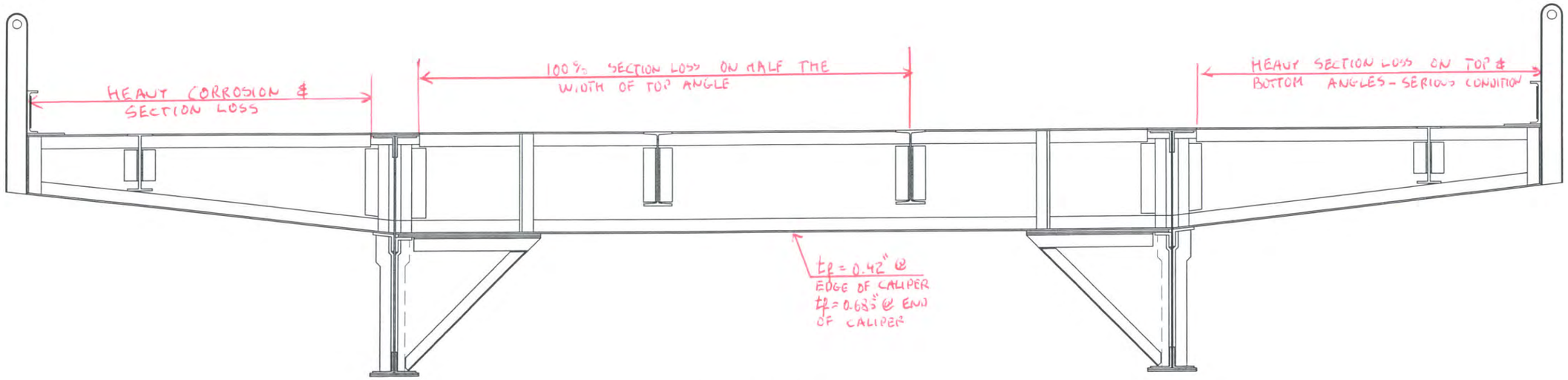

NORTH ELEVATION
(LOOKING SOUTH)

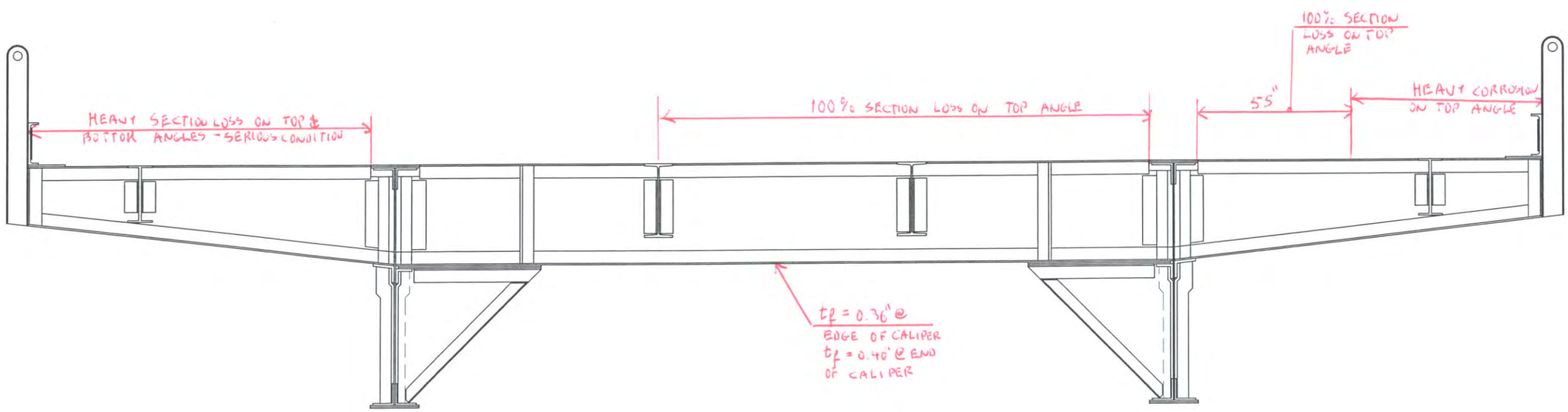

SOUTH ELEVATION
(LOOKING NORTH)

Hoyle, Tanner Associates, Inc.
Consulting Engineers

150 Dow Street.
Manchester, NH 03101-1227
Tel 603-669-5555, Fax 603-669-4168
Web Page: www.hoyletanner.com
© Copyright 2009

SARAH LONG BRIDGE
SPAN 8 FLOOR BEAM 3

INSPECTED BY: JB	DATE: 6-2-2009	SCALE: 3/8" = 1'-0"
& EGW	6-3-2009	

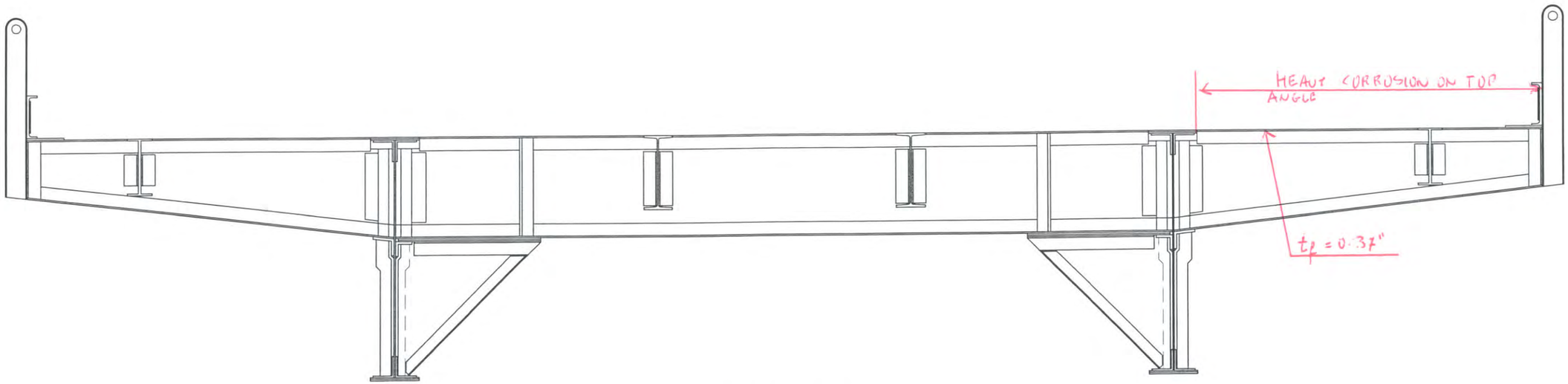

NORTH ELEVATION
(LOOKING SOUTH)

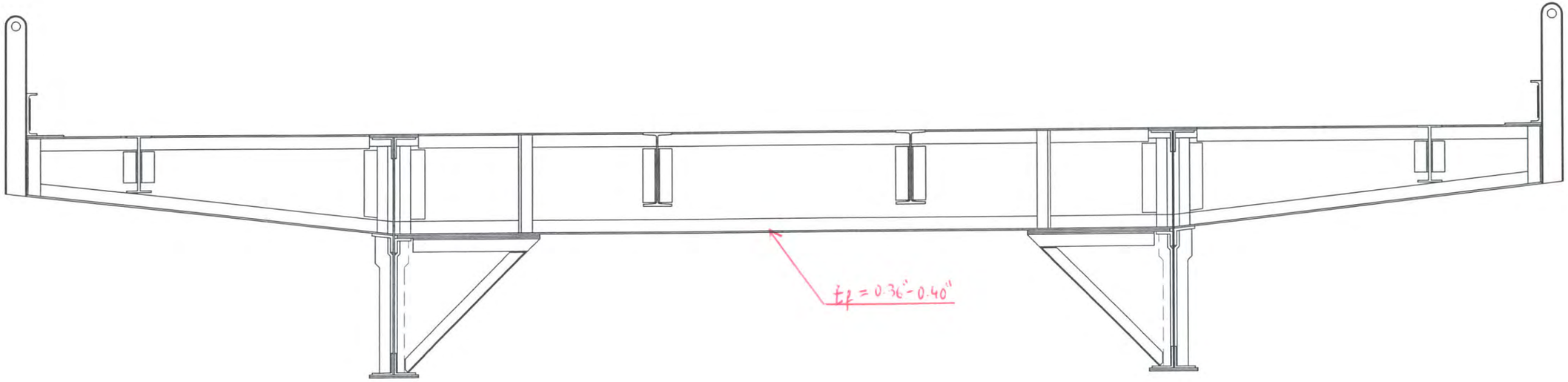

SOUTH ELEVATION
(LOOKING NORTH)

Hoyle, Tanner Associates, Inc.
Consulting Engineers

150 Dow Street.
Manchester, NH 03101-1227
Tel 603-669-5555, Fax 603-669-4168
Web Page: www.hoyletanner.com
© Copyright 2009

SARAH LONG BRIDGE
SPAN 9 FLOOR BEAM 0

INSPECTED BY: JB	DATE: 6-3-2009	SCALE: 3/8" = 1'-0"
& EGW	6-2-2009	

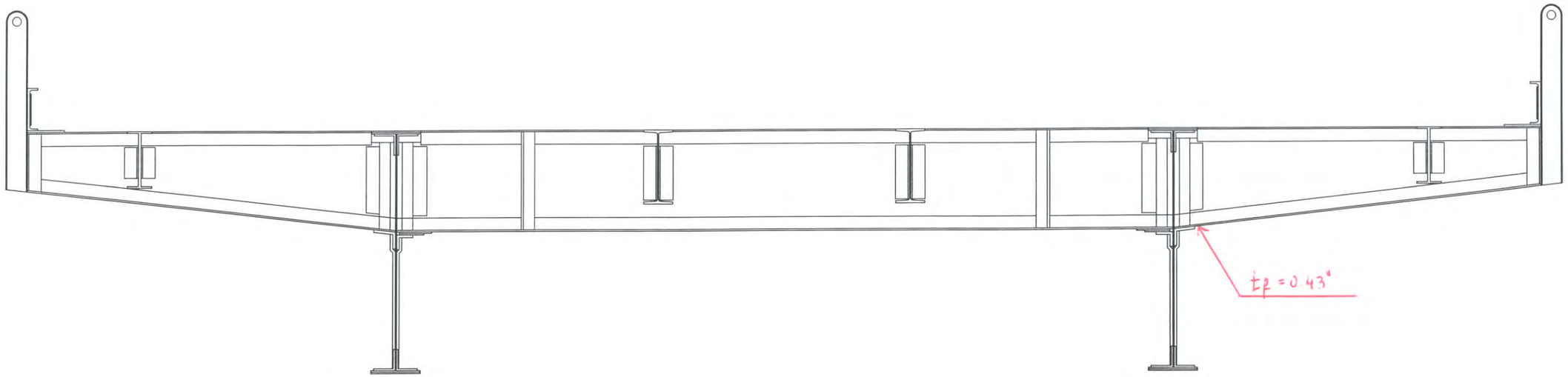

NORTH ELEVATION
(LOOKING SOUTH)

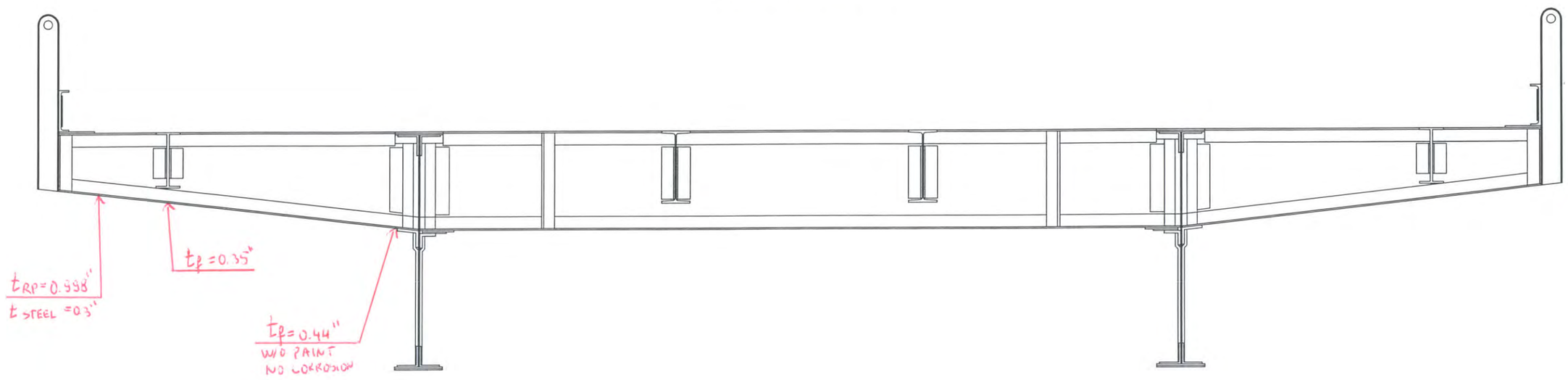

SOUTH ELEVATION
(LOOKING NORTH)

Hoyle, Tanner Associates, Inc.
Consulting Engineers
150 Dow Street.
Manchester, NH 03101-1227
Tel 603-669-5555, Fax 603-669-4168
Web Page: www.hoyletanner.com
© Copyright 2009

SARAH LONG BRIDGE
SPAN 9 FLOOR BEAM 2

INSPECTED BY: JB	DATE: 6-2-2009	SCALE: 3/8" = 1'-0"
& EGW	6-3-2009	

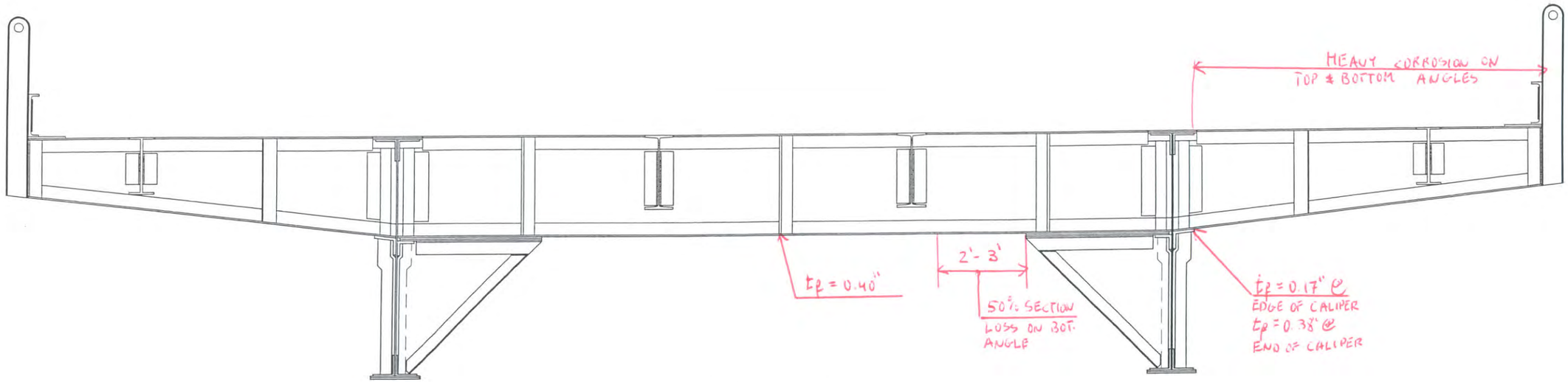

NORTH ELEVATION
(LOOKING SOUTH)

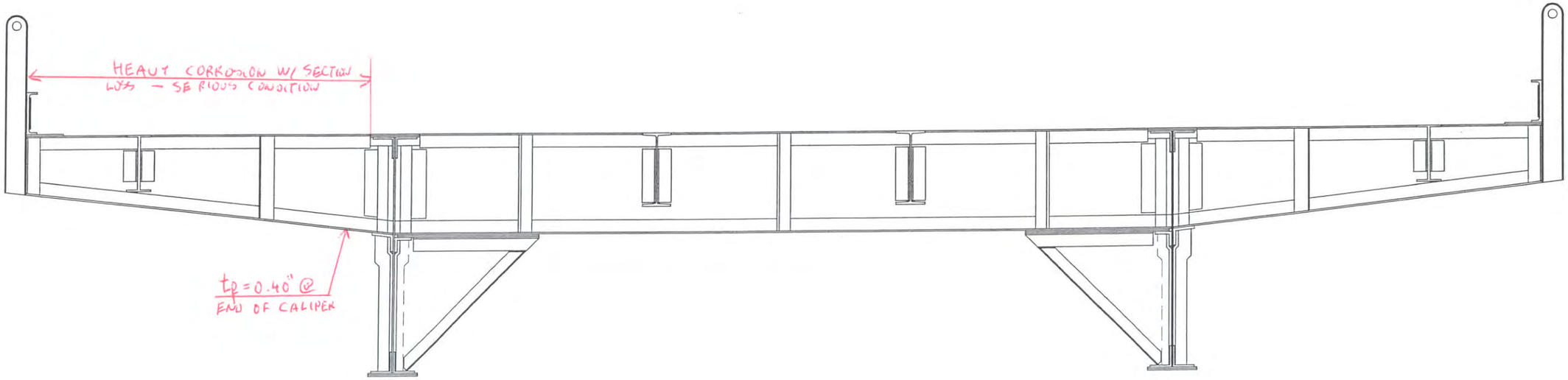

SOUTH ELEVATION
(LOOKING NORTH)

Hoyle, Tanner & Associates, Inc.
Consulting Engineers

150 Dow Street
Manchester, NH 03101-1227
Tel 603-669-5555, Fax 603-669-4168
Web Page: www.hoyletanner.com
© Copyright 2009

SARAH LONG BRIDGE
SPAN 9 FLOOR BEAM 3

INSPECTED BY: JB & EGW	DATE: 6-3-2009 6-1-2009	SCALE: 3/8" = 1'-0"

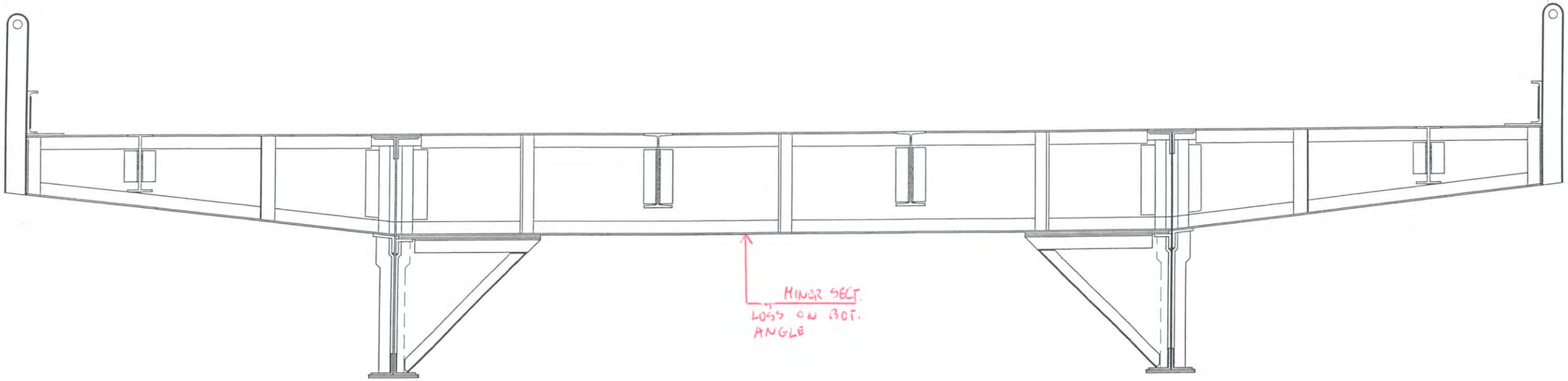

NORTH ELEVATION
(LOOKING SOUTH)

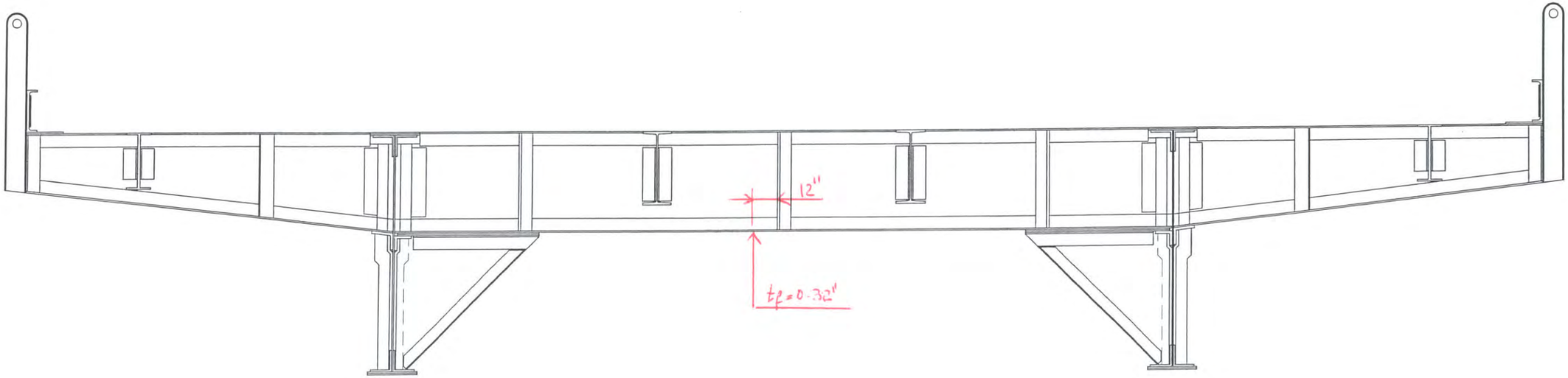

SOUTH ELEVATION
(LOOKING NORTH)

Hoyle, Tanner & Associates, Inc.
Consulting Engineers
150 Dow Street.
Manchester, NH 03101-1227
Tel 603-669-5555, Fax 603-669-4168
Web Page: www.hoyletanner.com
© Copyright 2009

SARAH LONG BRIDGE
SPAN 10 FLOOR BEAM 0

INSPECTED BY: JB & EGW	DATE: 6-3-2004 6-1-2004	SCALE: 3/8" = 1'-0"

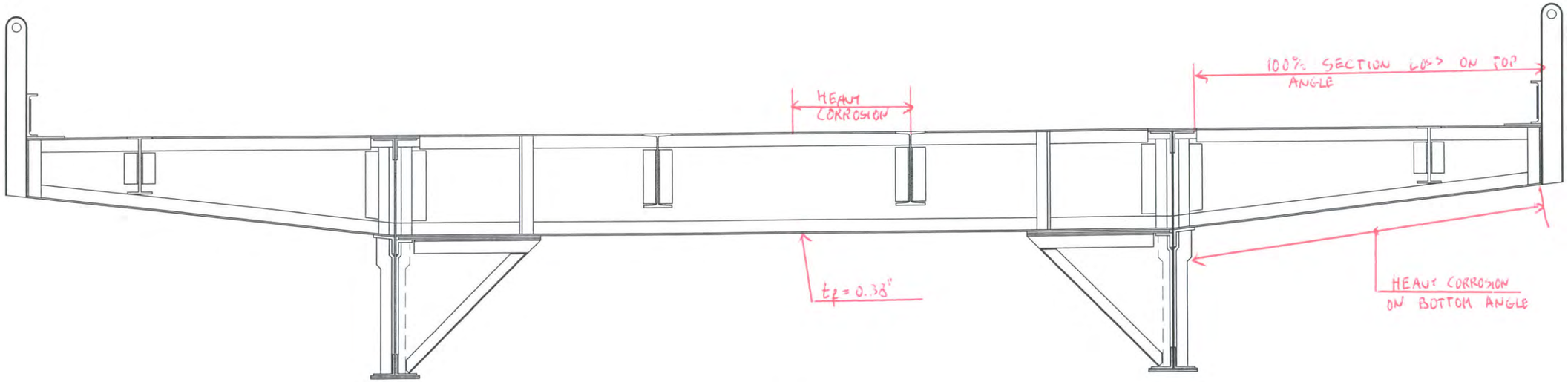

NORTH ELEVATION
(LOOKING SOUTH)

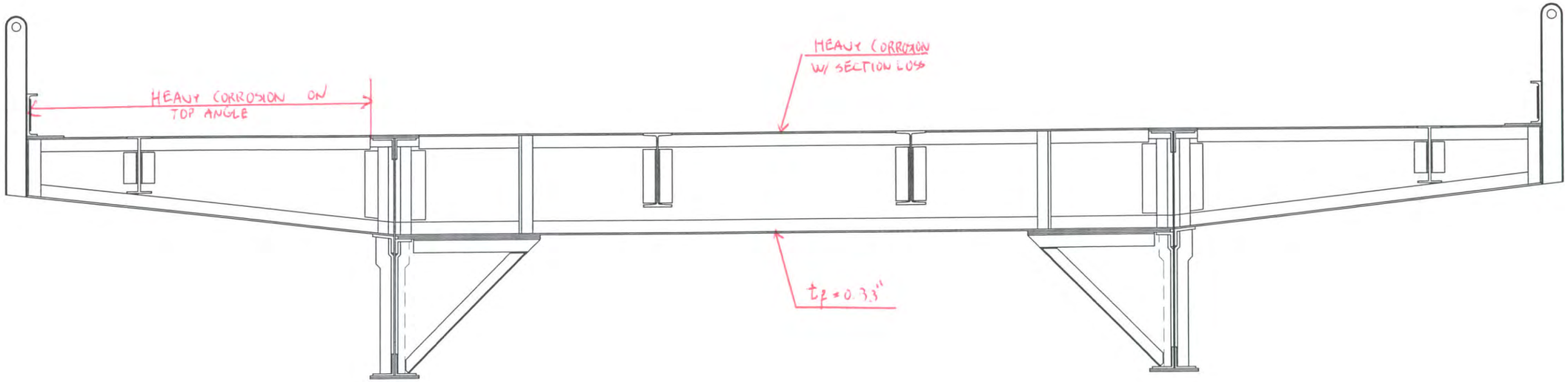

SOUTH ELEVATION
(LOOKING NORTH)

Hoyle, Tanner Associates, Inc.
Consulting Engineers

150 Dow Street.
Manchester, NH 03101–1227
Tel 603–669–5555, Fax 603–669–4168
Web Page: www.hoyletanner.com
© Copyright 2009

SARAH LONG BRIDGE
SPAN 10 FLOOR BEAM 3

INSPECTED BY: JB & EGW	DATE: 6-1-2009 6-3-2009	SCALE: ⅜" = 1'–0"

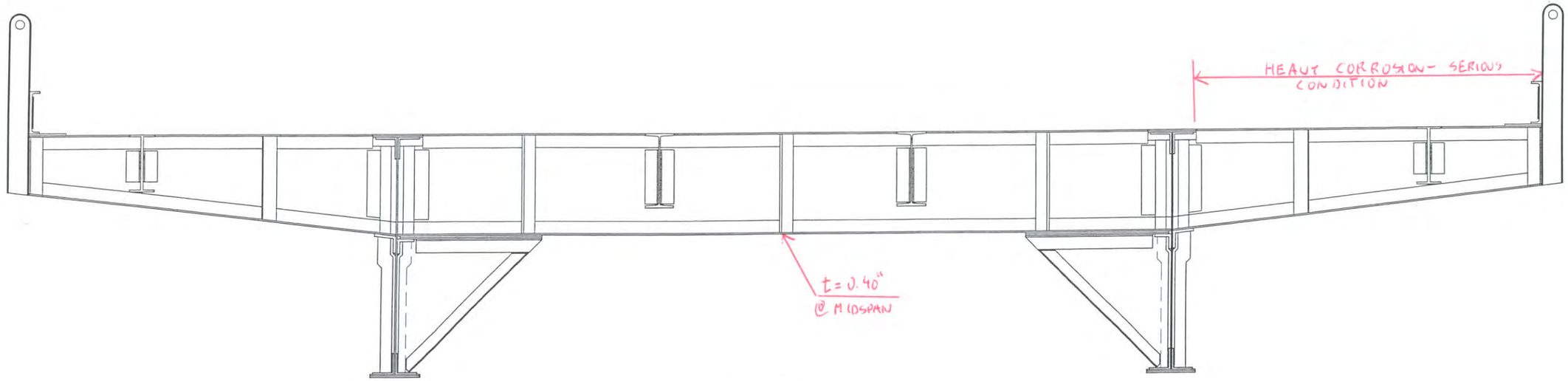

NORTH ELEVATION
(LOOKING SOUTH)

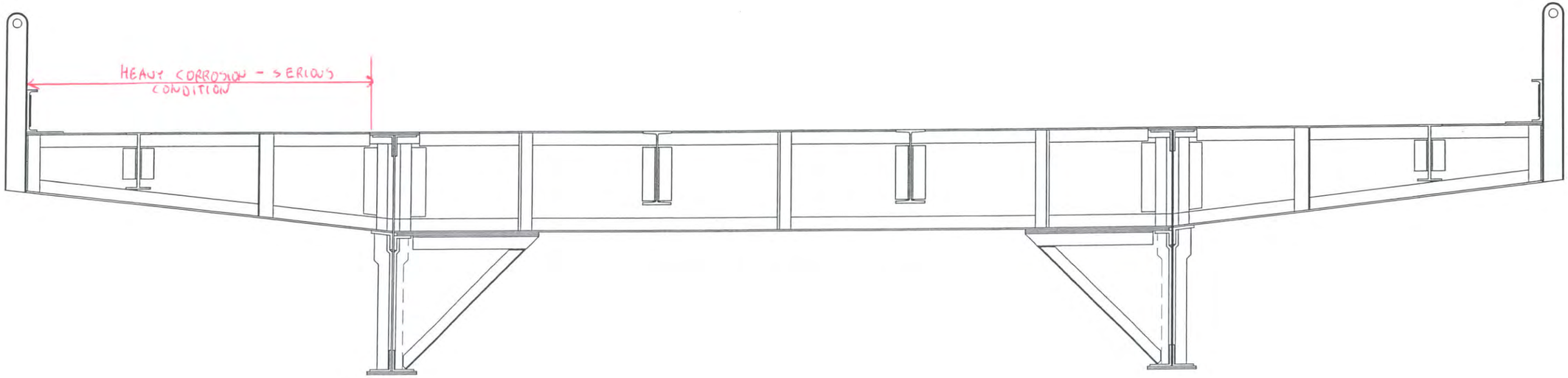

SOUTH ELEVATION
(LOOKING NORTH)

Hoyle, Tanner & Associates, Inc.
Consulting Engineers

150 Dow Street,
Manchester, NH 03101-1227
Tel 603-669-5555, Fax 603-669-4168
Web Page: www.hoyletanner.com
© Copyright 2009

SARAH LONG BRIDGE
SPAN 11 FLOOR BEAM 3

INSPECTED BY: JB & EGW	DATE: 6-1-2009 6-3-2009	SCALE: 3/8" = 1'-0"

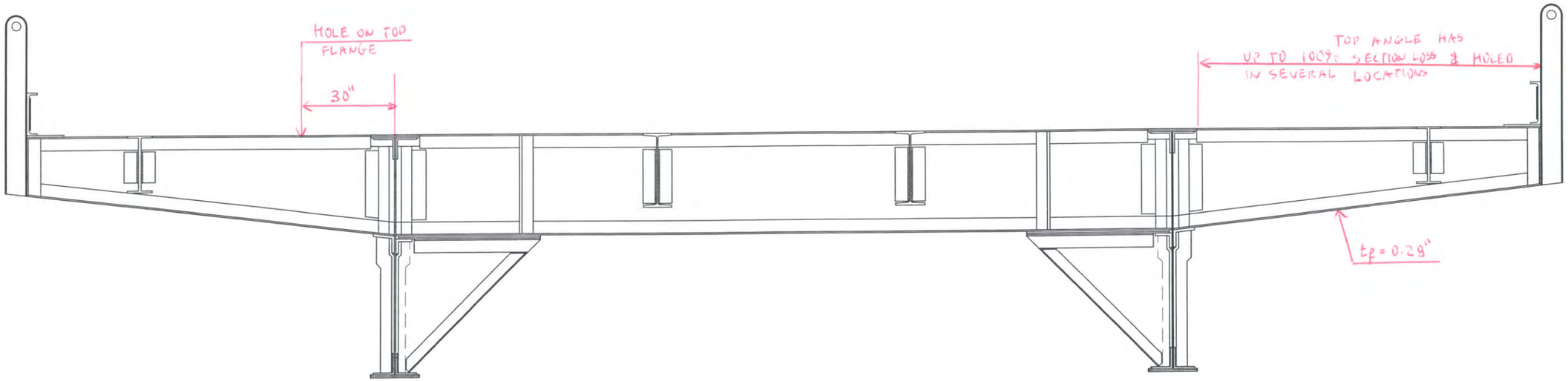

NORTH ELEVATION
(LOOKING SOUTH)

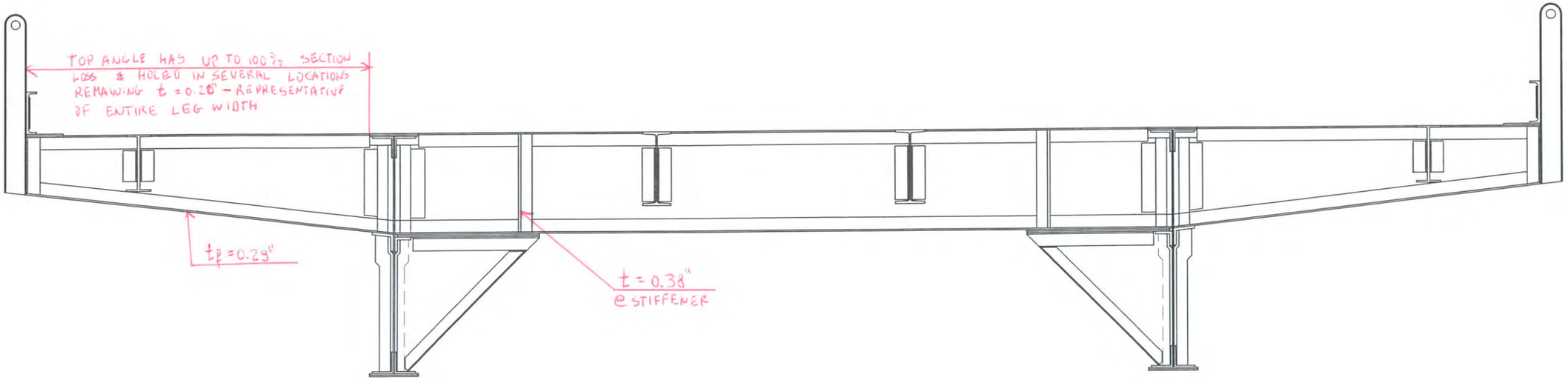

SOUTH ELEVATION
(LOOKING NORTH)

Hoyle, Tanner & Associates, Inc.
Consulting Engineers

150 Dow Street.
Manchester, NH 03101–1227
Tel 603–669–5555, Fax 603–669–4168
Web Page: www.hoyletanner.com
© Copyright 2009

SARAH LONG BRIDGE
SPAN 12 FLOOR BEAM 3

INSPECTED BY: JB & EGW	DATE: 6-1-2009 6-3-2009	SCALE: 3/8" = 1'–0"

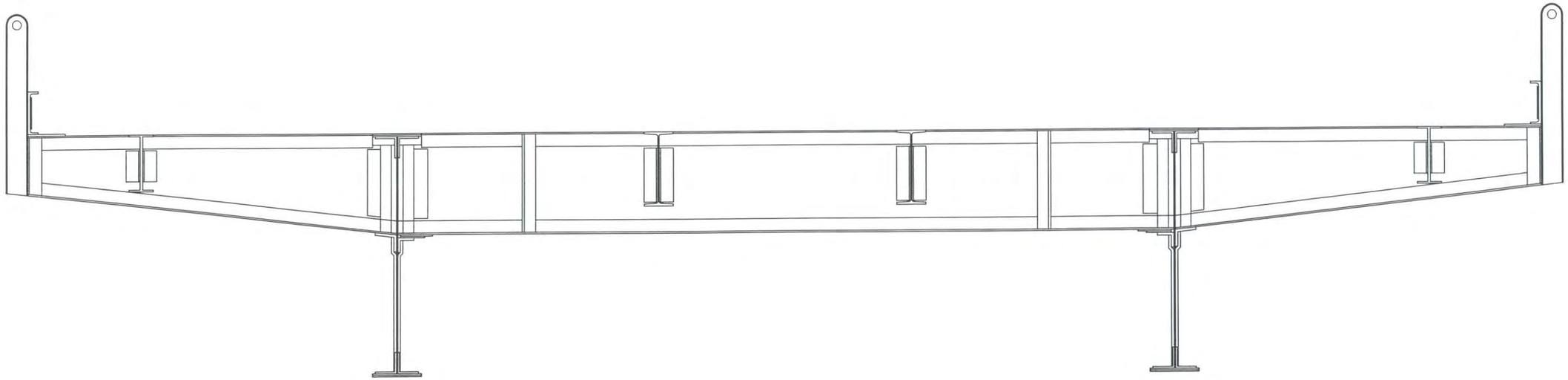

NORTH ELEVATION
(LOOKING SOUTH)

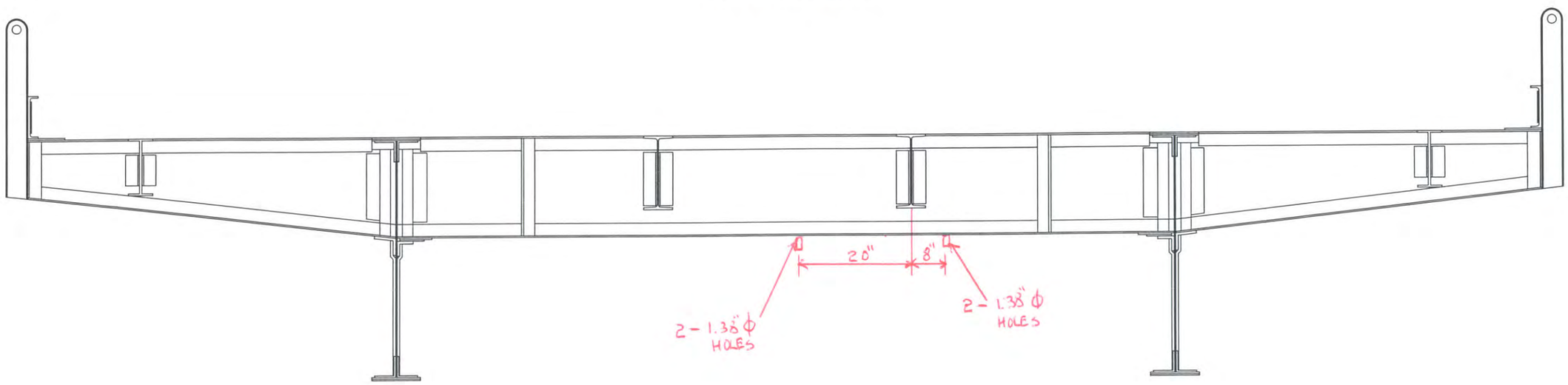

SOUTH ELEVATION
(LOOKING NORTH)

Hoyle, Tanner Associates, Inc.
Consulting Engineers
150 Dow Street.
Manchester, NH 03101-1227
Tel 603-669-5555, Fax 603-669-4168
Web Page: www.hoyletanner.com
© Copyright 2009

SARAH LONG BRIDGE
SPAN 15 FLOOR BEAM 1

INSPECTED BY: JB & EGW	DATE: 5-28-2009	SCALE: 3/8" = 1'-0"

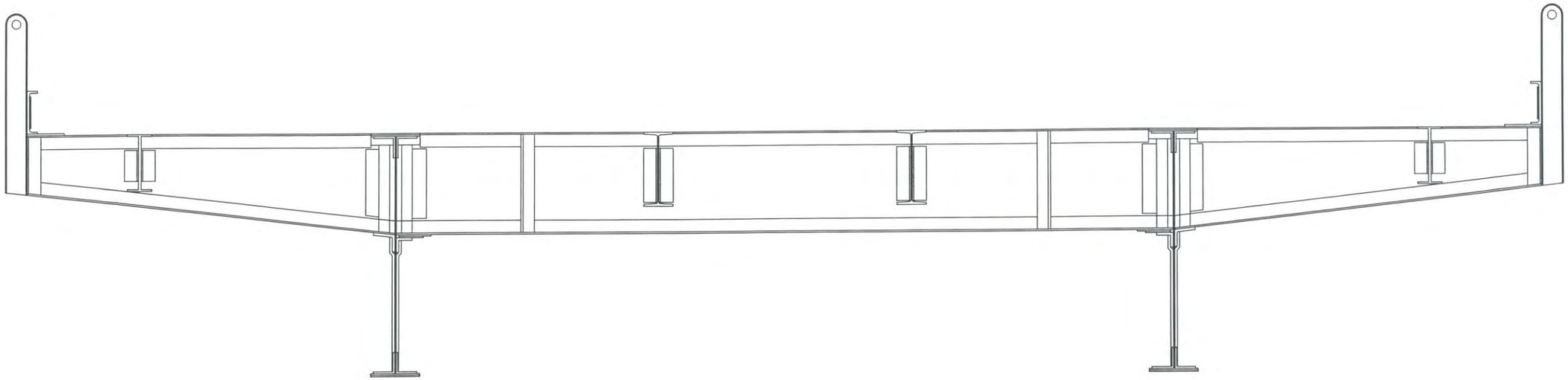

NORTH ELEVATION
(LOOKING SOUTH)

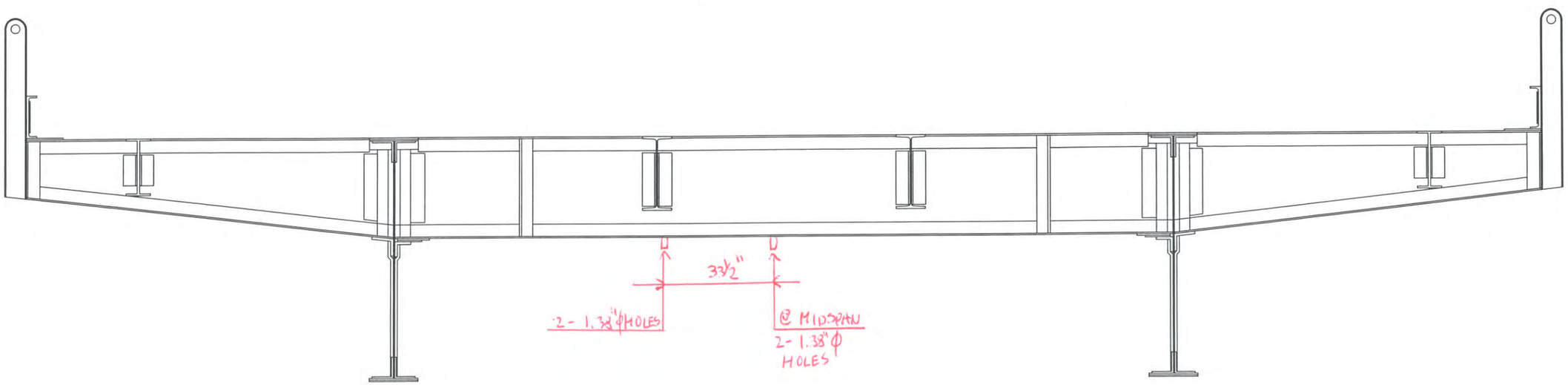

SOUTH ELEVATION
(LOOKING NORTH)

Hoyle, Tanner Associates, Inc.
Consulting Engineers
150 Dow Street.
Manchester, NH 03101-1227
Tel 603-669-5555, Fax 603-669-4168
Web Page: www.hoyletanner.com
© Copyright 2009

SARAH LONG BRIDGE
SPAN 15 FLOOR BEAM 2

INSPECTED BY: JB & EGW	DATE: 5-23-09	SCALE: ⅜" = 1'-0"

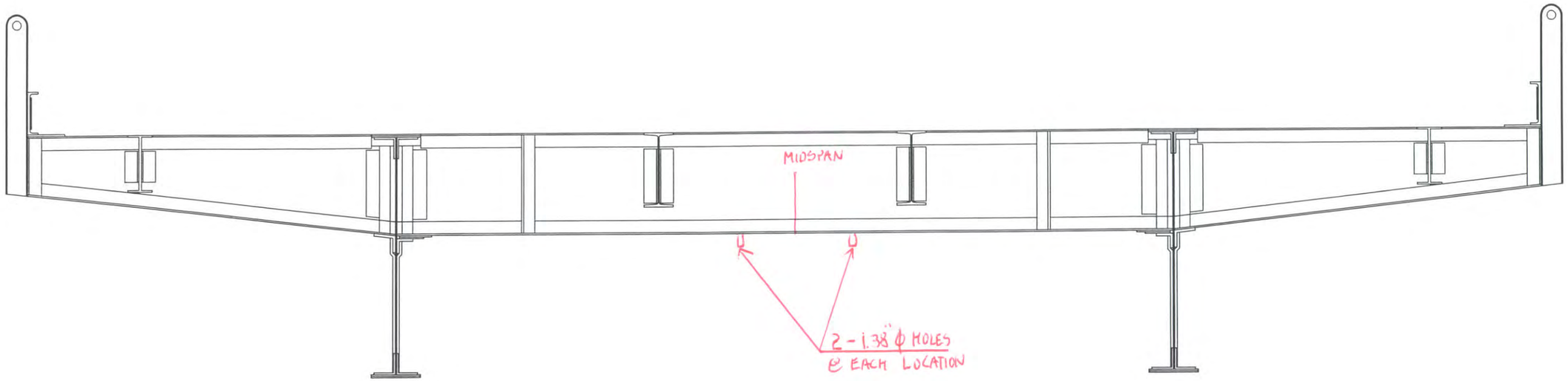

NORTH ELEVATION
(LOOKING SOUTH)

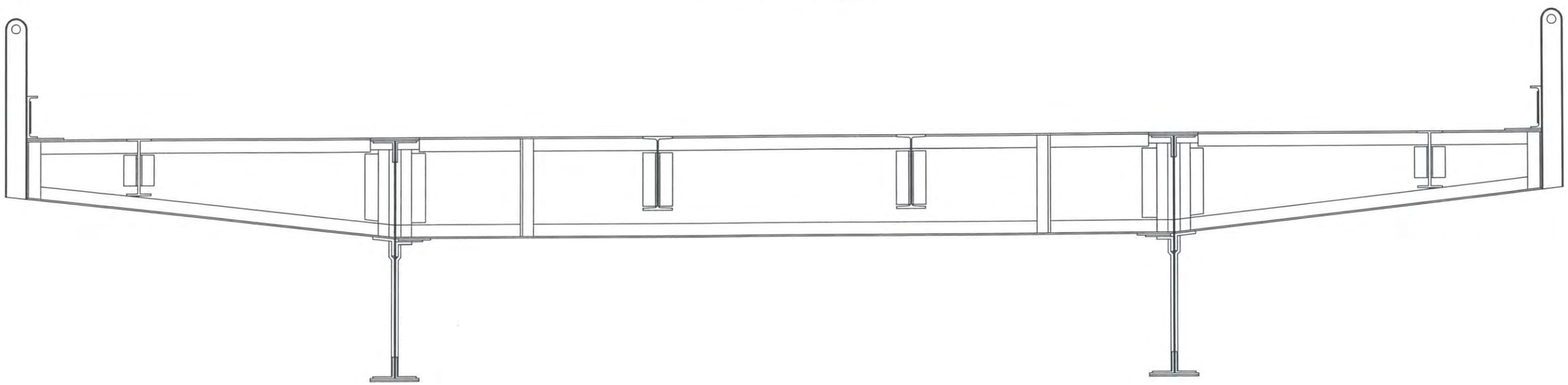

SOUTH ELEVATION
(LOOKING NORTH)

Hoyle, Tanner Associates, Inc.
Consulting Engineers
150 Dow Street.
Manchester, NH 03101-1227
Tel 603-669-5555, Fax 603-669-4168
Web Page: www.hoyletanner.com
© Copyright 2009

SARAH LONG BRIDGE
SPAN 15 FLOOR BEAM 3

INSPECTED BY: JB & EGW	DATE: 5-28-04	SCALE: ⅜" = 1'-0"

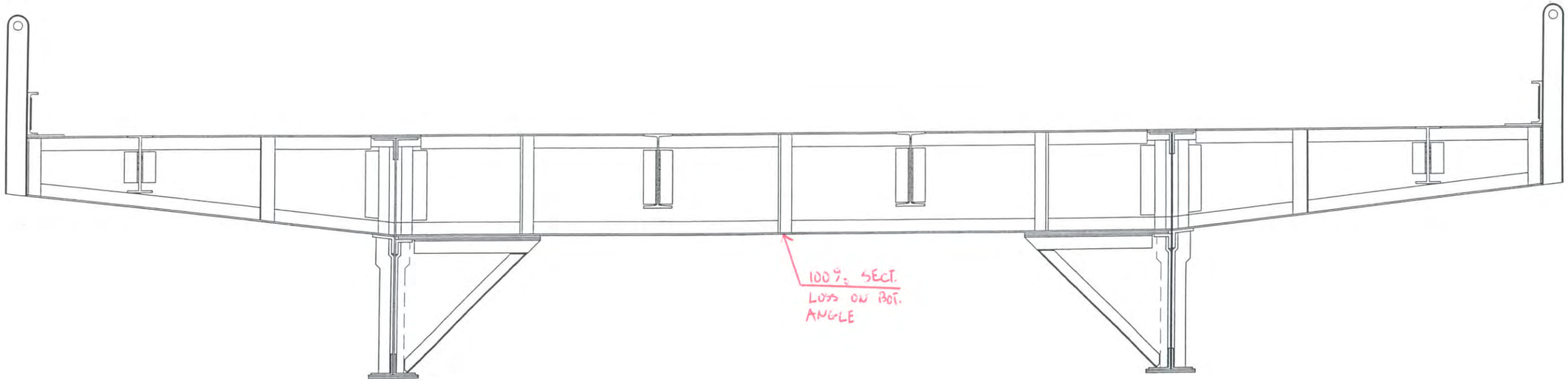

NORTH ELEVATION
(LOOKING SOUTH)

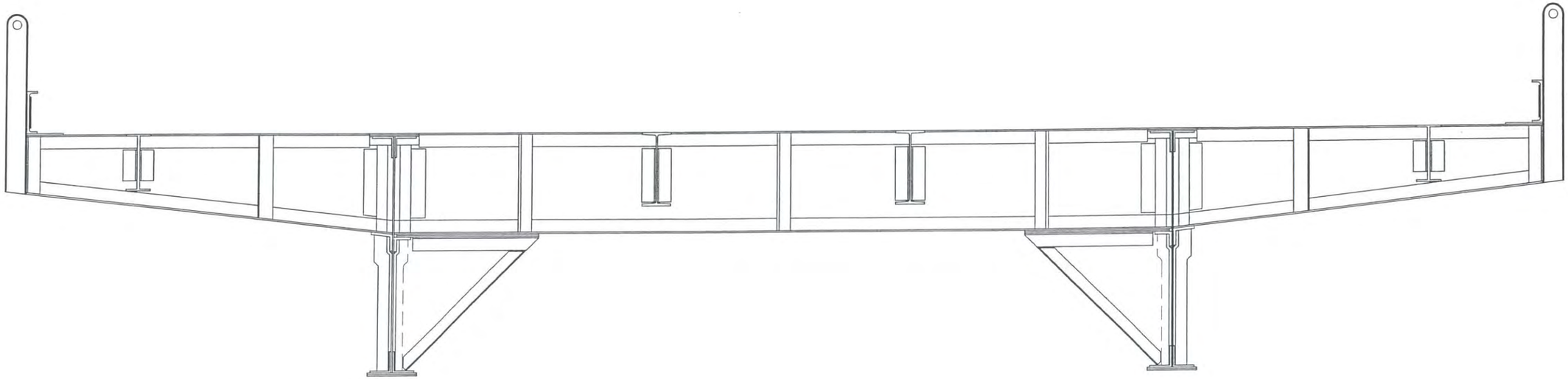

SOUTH ELEVATION
(LOOKING NORTH)

Hoyle, Tanner & Associates, Inc.
Consulting Engineers
150 Dow Street.
Manchester, NH 03101-1227
Tel 603-669-5555, Fax 603-669-4168
Web Page: www.hoyletanner.com
© Copyright 2009

SARAH LONG BRIDGE
SPAN 15 FLOOR BEAM 4

INSPECTED BY: JB & EGW	DATE: 6-1-2009 5-28-09	SCALE: 3/8" = 1'-0"

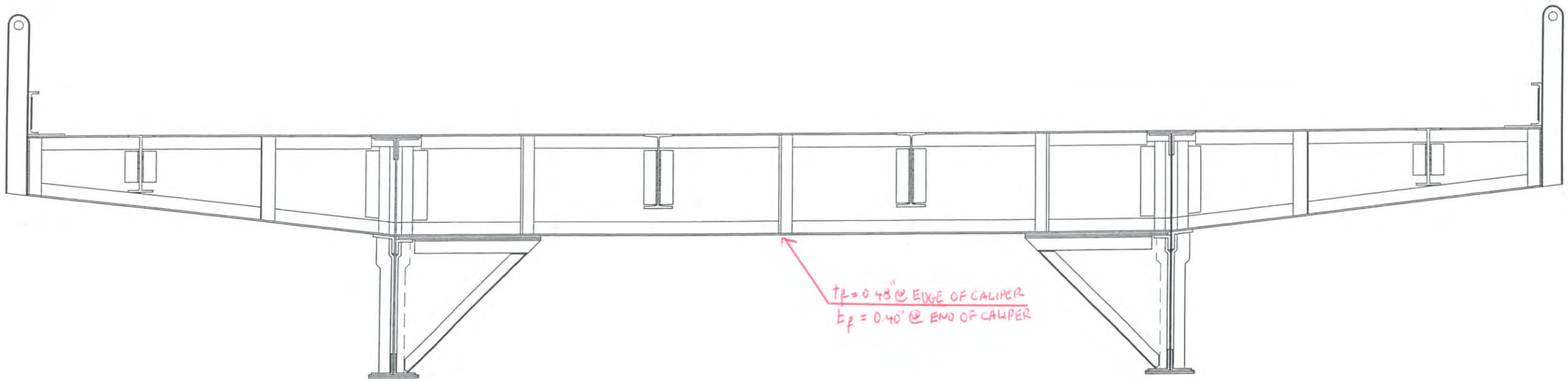

NORTH ELEVATION
(LOOKING SOUTH)

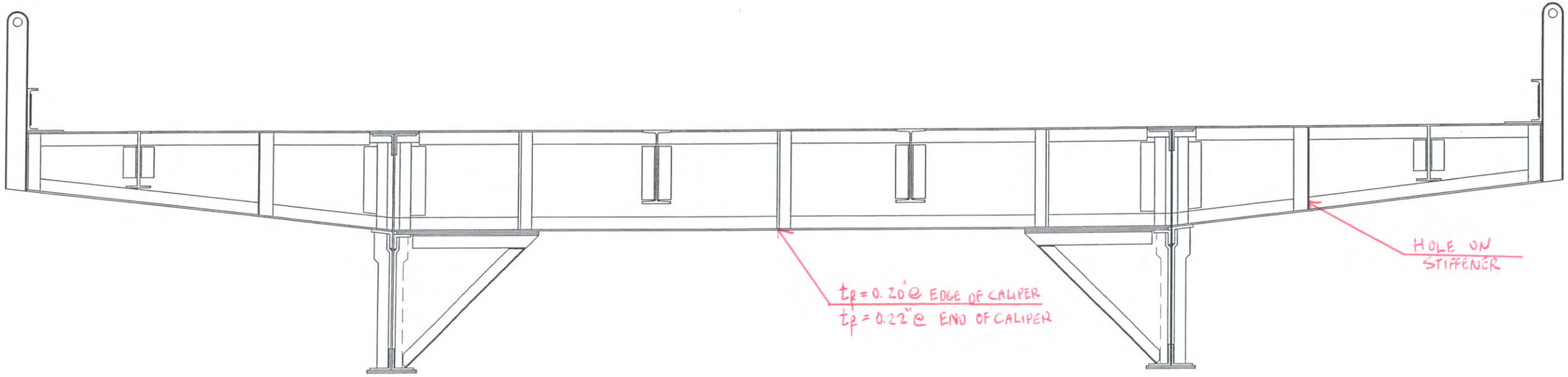

SOUTH ELEVATION
(LOOKING NORTH)

Hoyle, Tanner Associates, Inc.
Consulting Engineers

150 Dow Street.
Manchester, NH 03101-1227
Tel 603-669-5555, Fax 603-669-4168
Web Page: www.hoyletanner.com
© Copyright 2009

SARAH LONG BRIDGE
SPAN 21 FLOOR BEAM 0

INSPECTED BY: JB & EGW	DATE: 6-2-2003 6-4-2003	SCALE: 1/8" = 1'-0"

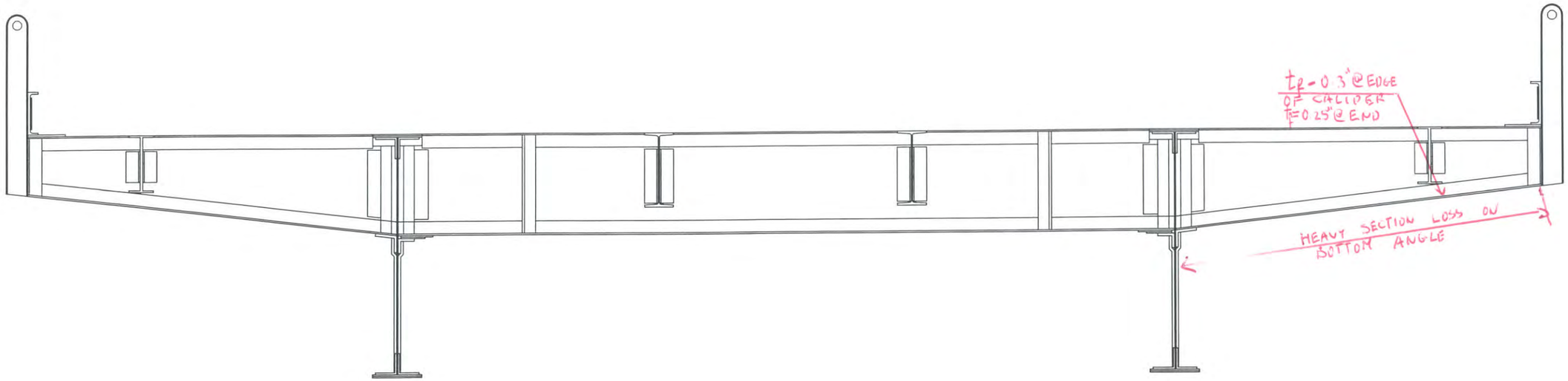

NORTH ELEVATION
(LOOKING SOUTH)

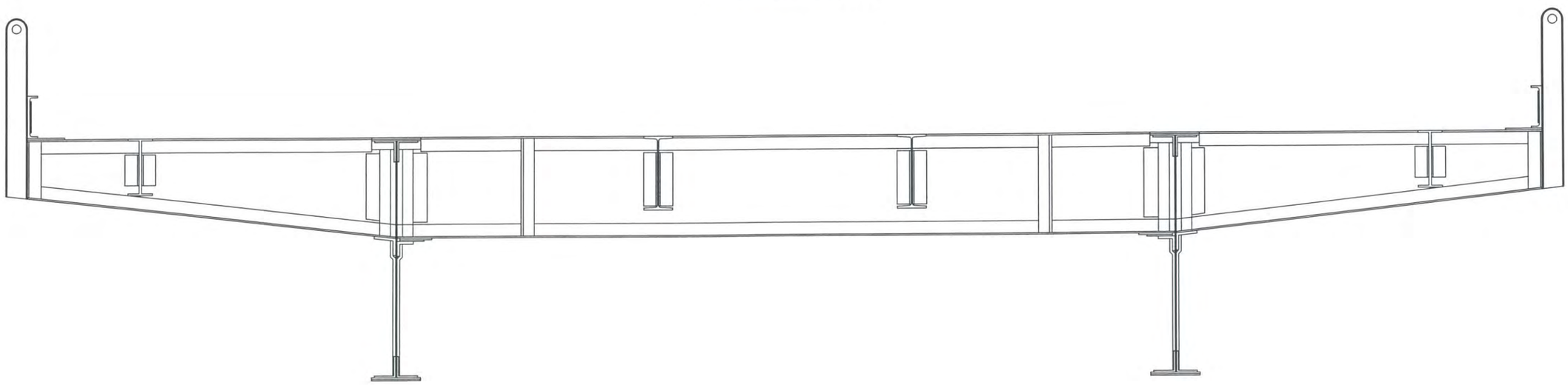

SOUTH ELEVATION
(LOOKING NORTH)

Hoyle, Tanner Associates, Inc.
Consulting Engineers
150 Dow Street.
Manchester, NH 03101-1227
Tel 603-669-5555, Fax 603-669-4168
Web Page: www.hoyletanner.com
© Copyright 2009

SARAH LONG BRIDGE
SPAN 21 FLOOR BEAM 2

INSPECTED BY: JB & EGW	DATE: 6-4-2009	SCALE: ⅜" = 1'-0"

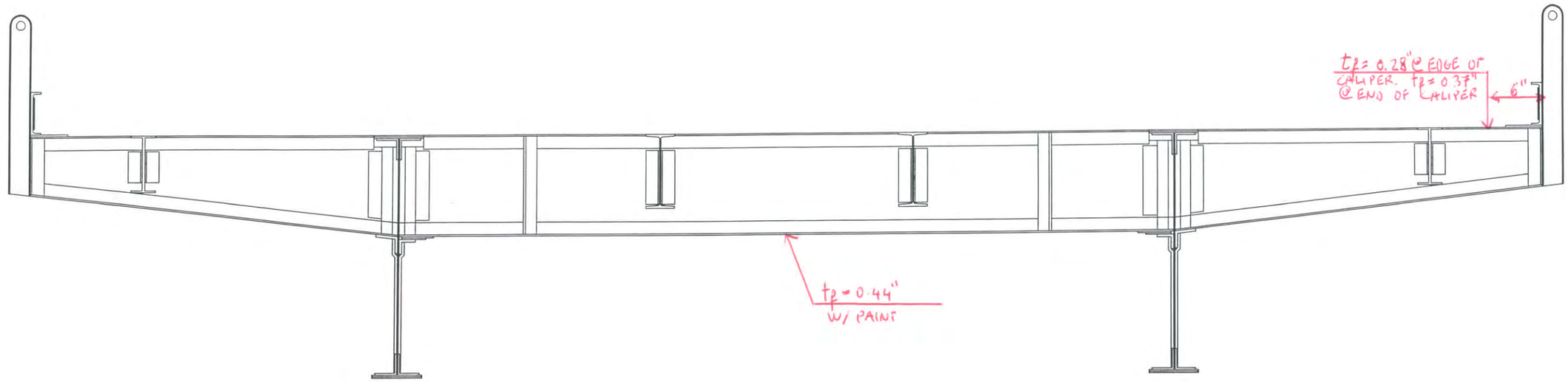

NORTH ELEVATION
(LOOKING SOUTH)

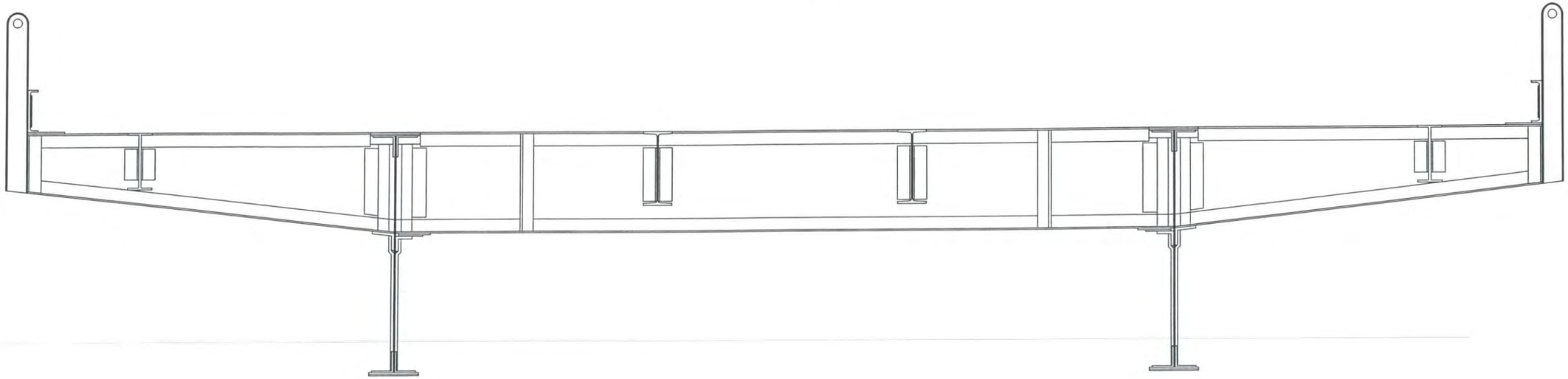

SOUTH ELEVATION
(LOOKING NORTH)

Hoyle, Tanner Associates, Inc.
Consulting Engineers
150 Dow Street,
Manchester, NH 03101-1227
Tel 603-669-5555, Fax 603-669-4168
Web Page: www.hoyletanner.com
© Copyright 2009

SARAH LONG BRIDGE
SPAN 21 FLOOR BEAM 3

INSPECTED BY: JB & EGW	DATE: 6-4-2004	SCALE: 3/8" = 1'-0"

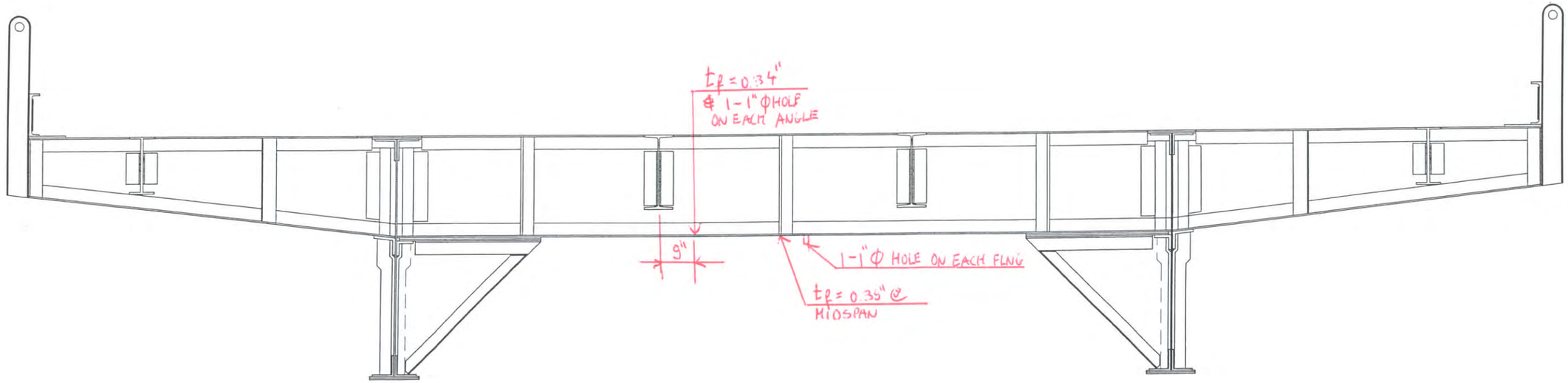

NORTH ELEVATION
(LOOKING SOUTH)

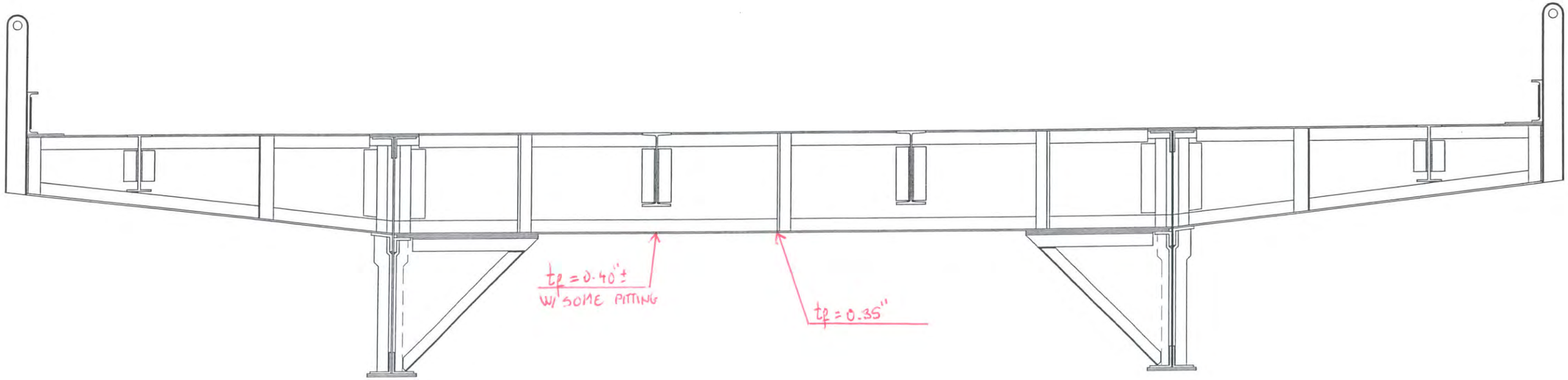

SOUTH ELEVATION
(LOOKING NORTH)

Hoyle, Tanner & Associates, Inc.
Consulting Engineers
150 Dow Street.
Manchester, NH 03101-1227
Tel 603-669-5555, Fax 603-669-4168
Web Page: www.hoyletanner.com
© Copyright 2009

SARAH LONG BRIDGE
SPAN 22 FLOOR BEAM 0

INSPECTED BY: JB & EGW	DATE: 6-6-2009	SCALE: 3/8" = 1'-0"

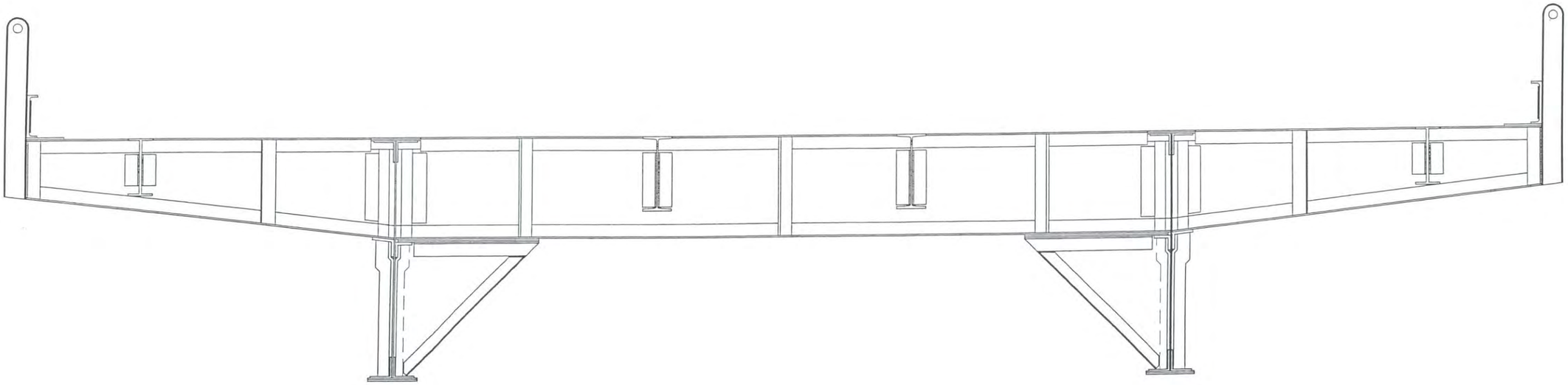

NORTH ELEVATION
(LOOKING SOUTH)

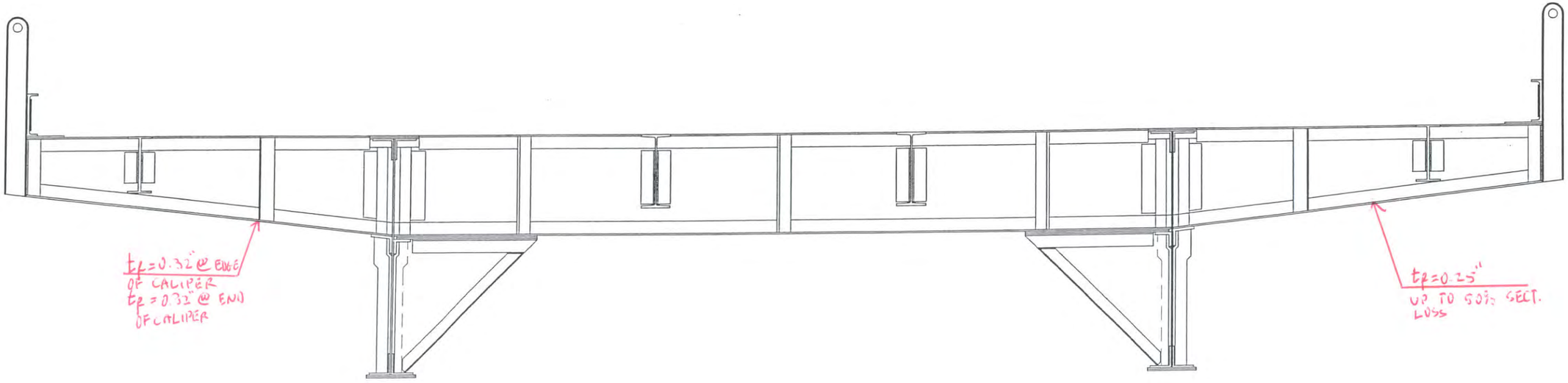

SOUTH ELEVATION
(LOOKING NORTH)

Hoyle, Tanner Associates, Inc.
Consulting Engineers

150 Dow Street,
Manchester, NH 03101-1227
Tel 603-669-5555, Fax 603-669-4168
Web Page: www.hoyletanner.com
© Copyright 2009

SARAH LONG BRIDGE
SPAN 23 FLOOR BEAM 0

INSPECTED BY: JB EGW	DATE: 6-4-2013	SCALE: 3/8" = 1'-0"

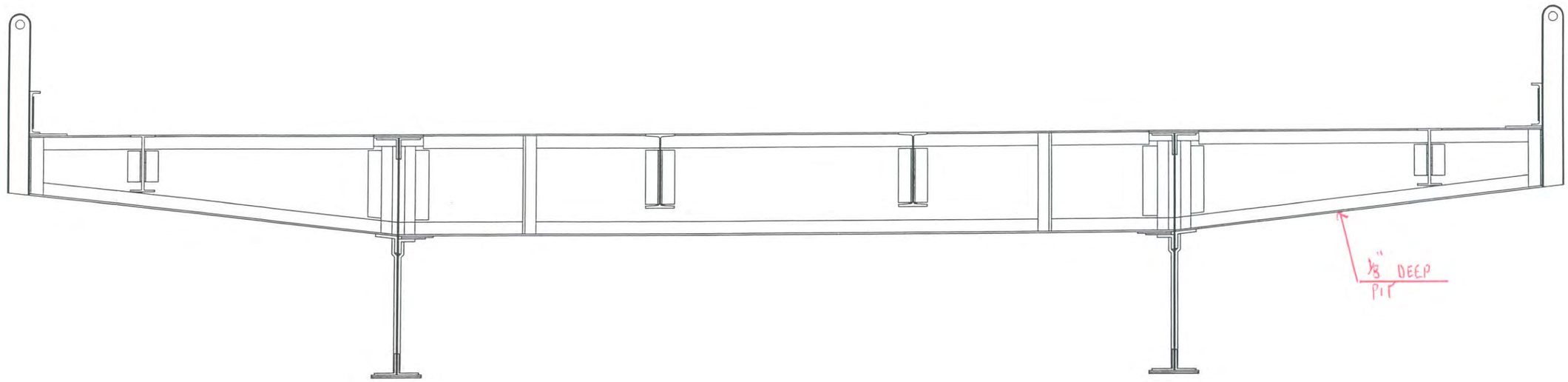

NORTH ELEVATION
(LOOKING SOUTH)

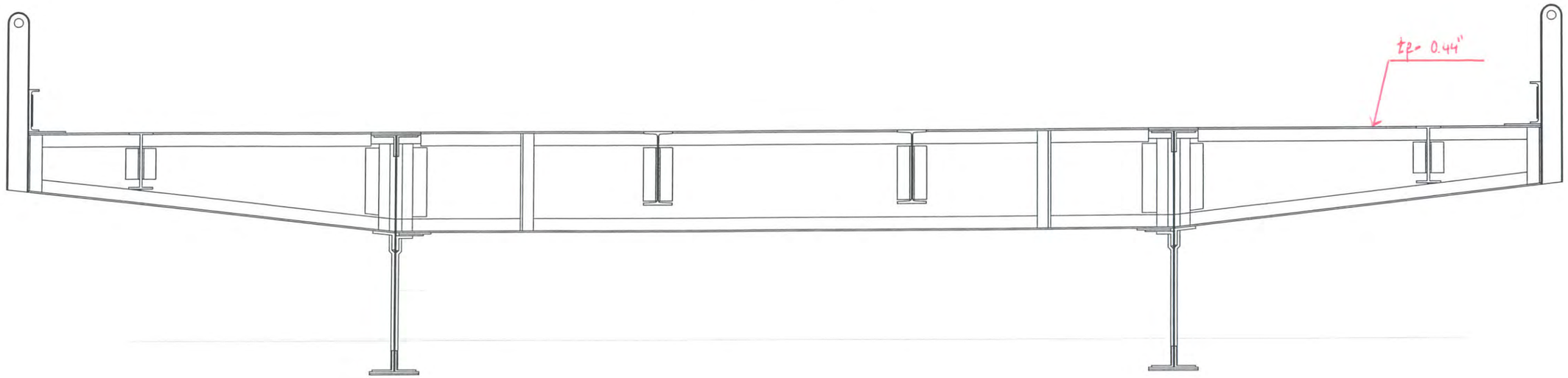

SOUTH ELEVATION
(LOOKING NORTH)

Hoyle, Tanner Associates, Inc.
Consulting Engineers
150 Dow Street.
Manchester, NH 03101-1227
Tel 603-669-5555, Fax 603-669-4168
Web Page: www.hoyletanner.com
© Copyright 2009

SARAH LONG BRIDGE
SPAN 23 FLOOR BEAM 3

INSPECTED BY: JB	DATE: 6-4-2003	SCALE: 3/8" = 1'-0"
& EGW		

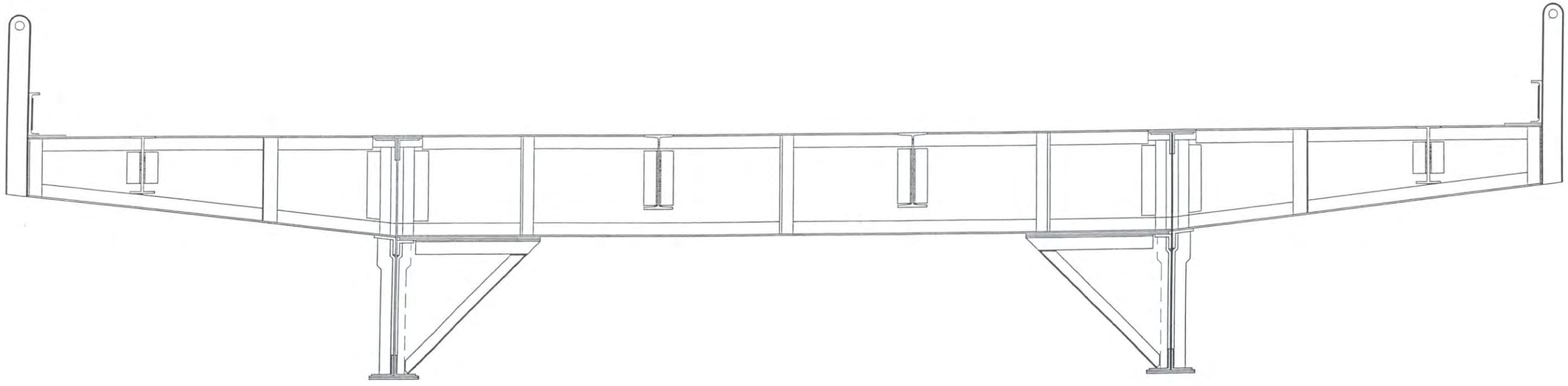

NORTH ELEVATION
(LOOKING SOUTH)

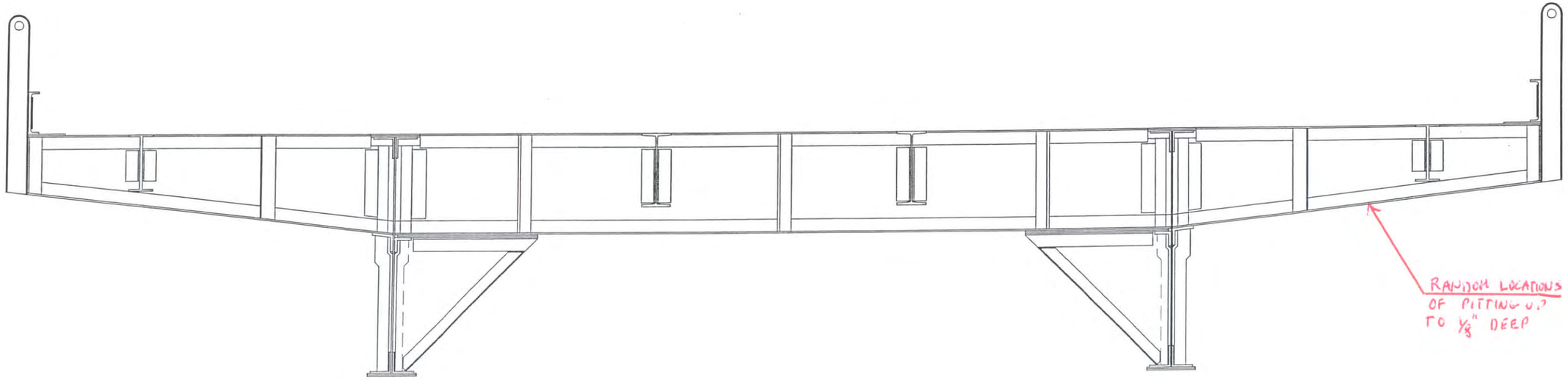

SOUTH ELEVATION
(LOOKING NORTH)

Hoyle, Tanner & Associates, Inc.
Consulting Engineers

150 Dow Street,
Manchester, NH 03101-1227
Tel 603-669-5555, Fax 603-669-4168
Web Page: www.hoyletanner.com
© Copyright 2009

SARAH LONG BRIDGE
SPAN 24 FLOOR BEAM 0

INSPECTED BY: JB & ELW	DATE: 6-6-2004	SCALE: 3/8" = 1'-0"

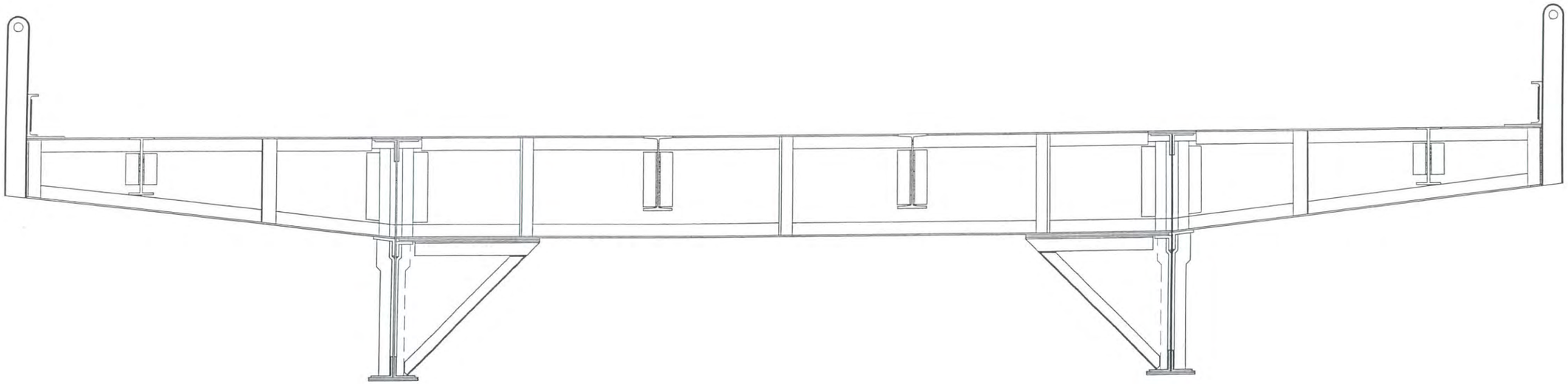

NORTH ELEVATION
(LOOKING SOUTH)

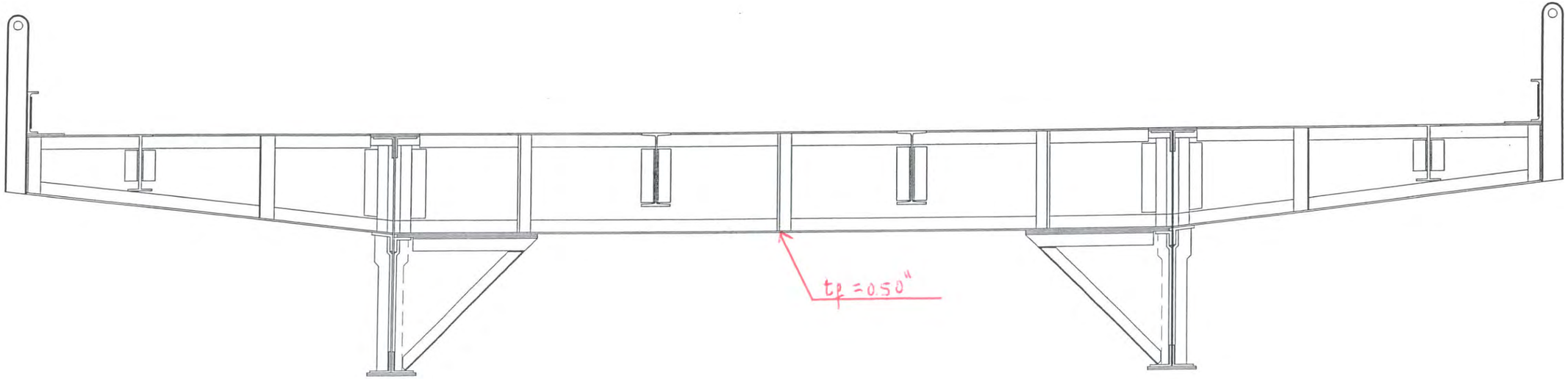

SOUTH ELEVATION
(LOOKING NORTH)

Hoyle, Tanner Associates, Inc.
Consulting Engineers

150 Dow Street,
Manchester, NH 03101-1227
Tel 603-669-5555, Fax 603-669-4168
Web Page: www.hoyletanner.com
© Copyright 2009

SARAH LONG BRIDGE
SPAN 25 FLOOR BEAM 0

INSPECTED BY: JB #EGW	DATE: 6-6-2008	SCALE: 3/8" = 1'-0"

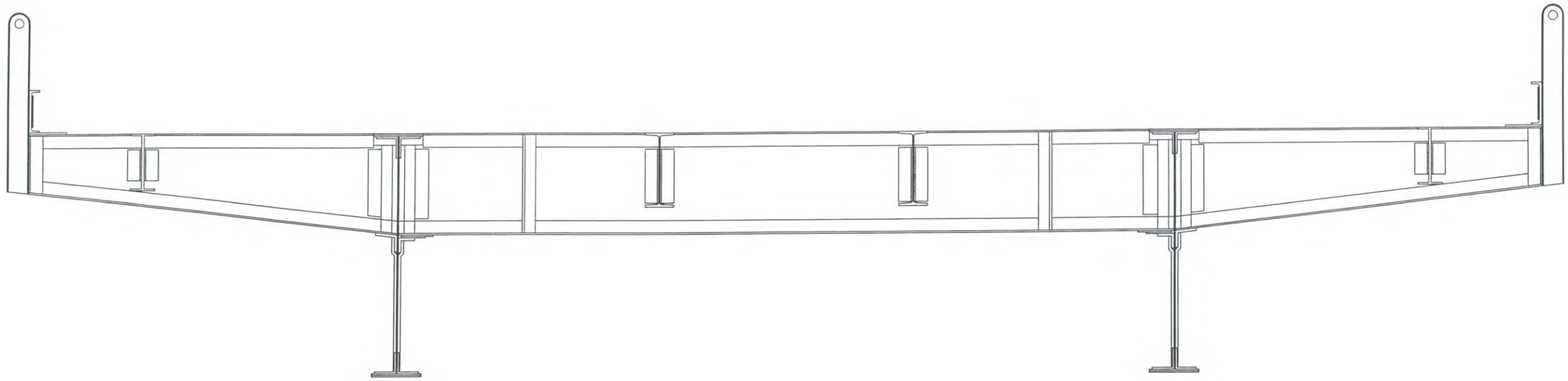

NORTH ELEVATION
(LOOKING SOUTH)

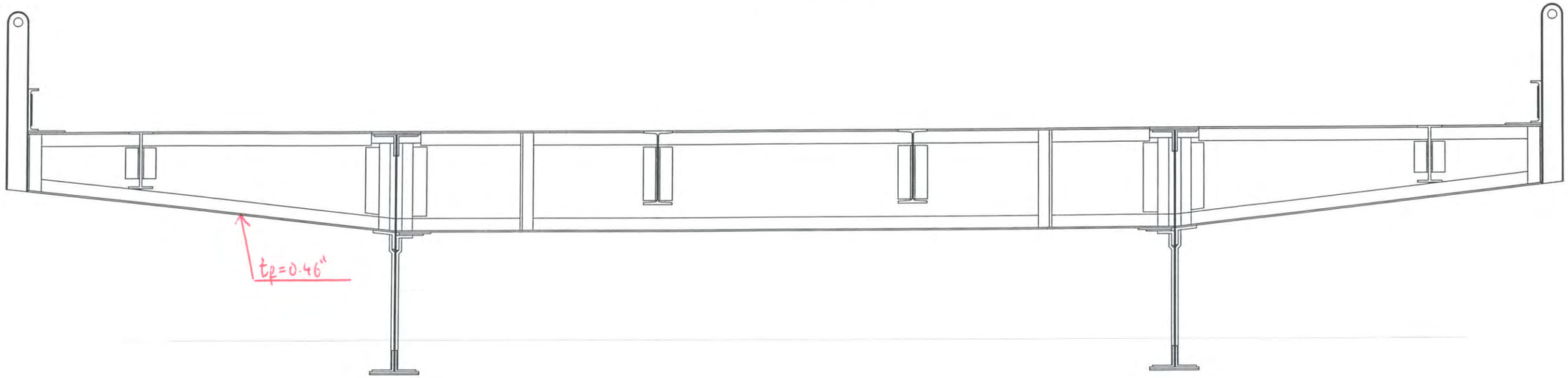

SOUTH ELEVATION
(LOOKING NORTH)

Hoyle, Tanner & Associates, Inc.
Consulting Engineers
150 Dow Street.
Manchester, NH 03101-1227
Tel 603-669-5555, Fax 603-669-4168
Web Page: www.hoyletanner.com
© Copyright 2009

SARAH LONG BRIDGE
SPAN 25 FLOOR BEAM 2

INSPECTED BY: SB & EGW	DATE: 6-6-2009	SCALE: 3/8" = 1'-0"

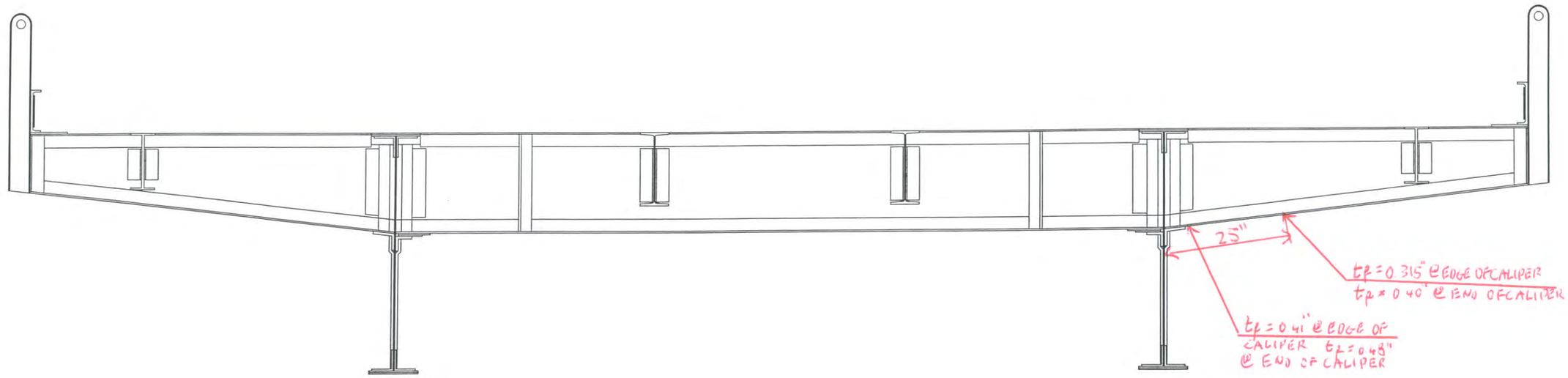

NORTH ELEVATION
(LOOKING SOUTH)

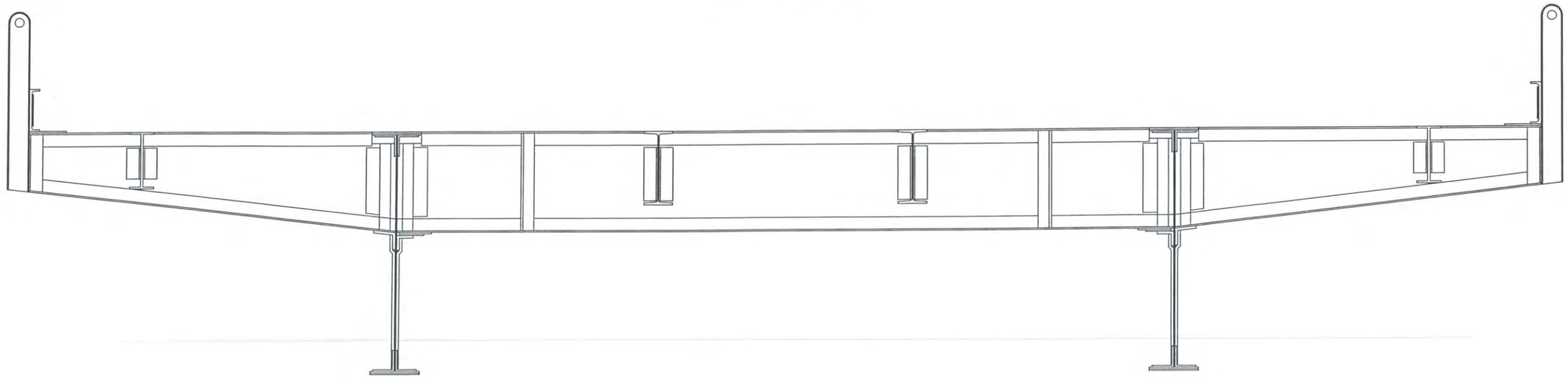

SOUTH ELEVATION
(LOOKING NORTH)

Hoyle, Tanner Associates, Inc.
Consulting Engineers
150 Dow Street.
Manchester, NH 03101-1227
Tel 603-669-5555, Fax 603-669-4168
Web Page: www.hoyletanner.com
© Copyright 2009

SARAH LONG BRIDGE
SPAN 25 FLOOR BEAM 3

INSPECTED BY: JB	DATE: 6-6-2004	SCALE: 3/8" = 1'-0"
A. EGW	6-4-2004	

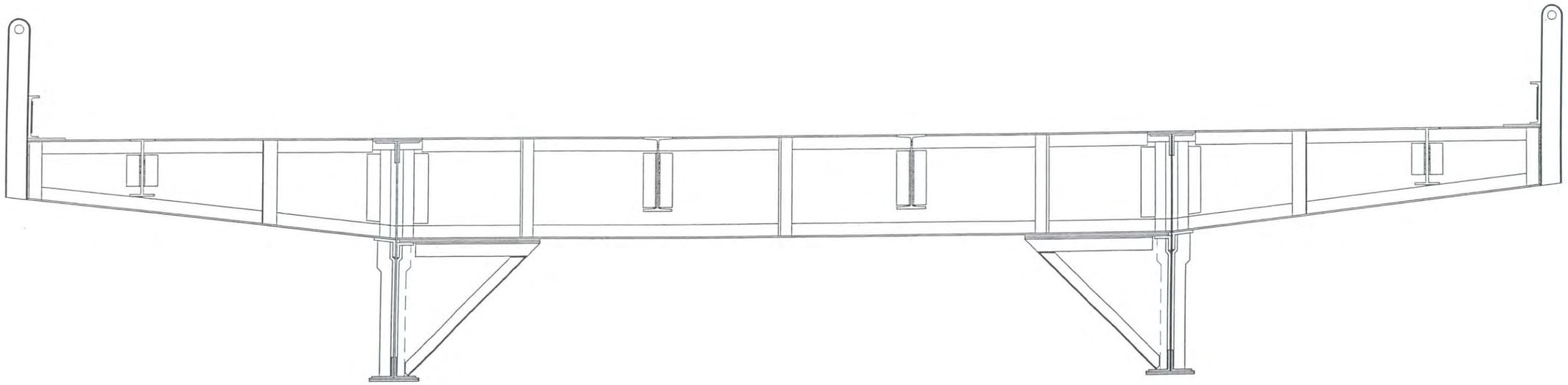

NORTH ELEVATION
(LOOKING SOUTH)

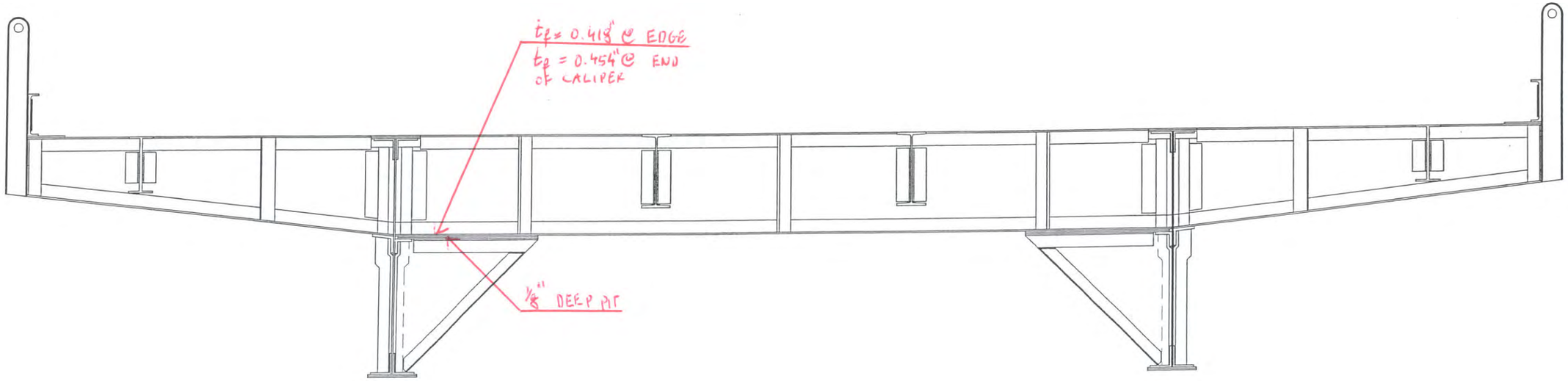

SOUTH ELEVATION
(LOOKING NORTH)

Hoyle, Tanner Associates, Inc.
Consulting Engineers

150 Dow Street
Manchester, NH 03101-1227
Tel 603-669-5555, Fax 603-669-4168
Web Page: www.hoyletanner.com
© Copyright 2009

SARAH LONG BRIDGE
SPAN 27 FLOOR BEAM 0

INSPECTED BY: JB & EGW	DATE:	SCALE: 3/8" = 1'-0"

Section C:

Stringer Condition

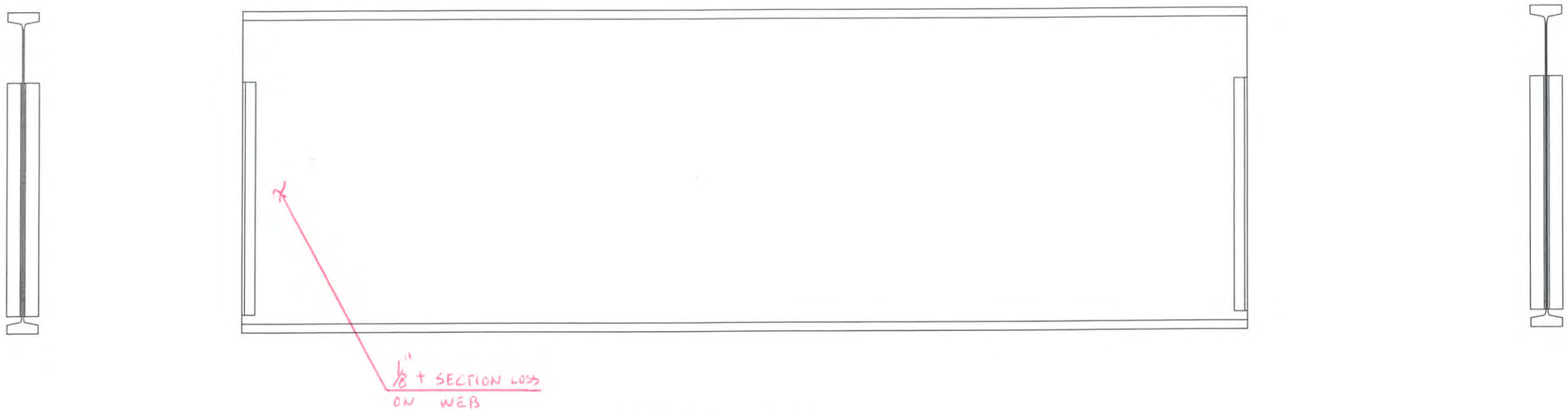

EAST ELEVATION
(LOOKING WEST)

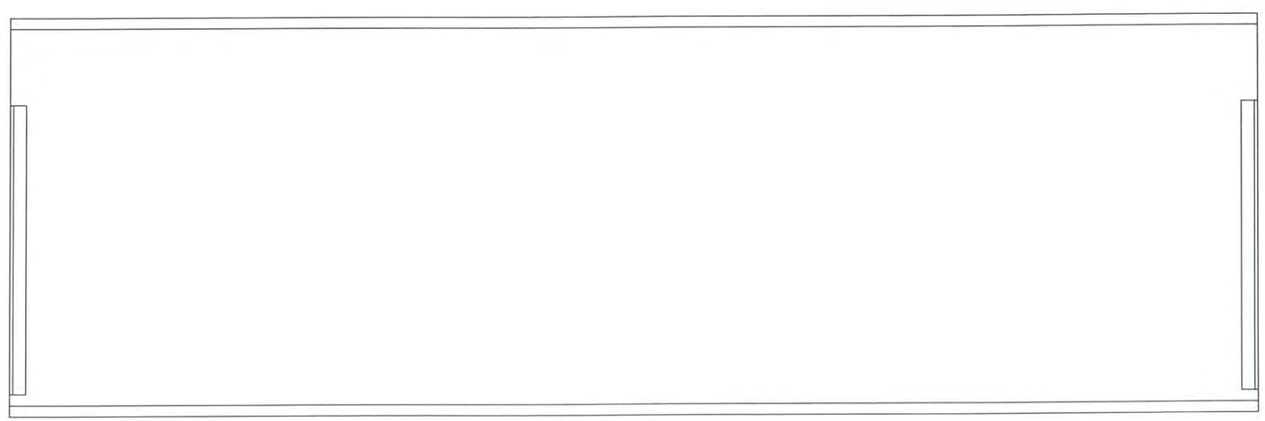

WEST ELEVATION
(LOOKING EAST)

Hoyle, Tanner Associates, Inc.
Consulting Engineers
150 Dow Street.
Manchester, NH 03101-1227
Tel 603-669-5555, Fax 603-669-4168
Web Page: www.hoyletanner.com
© Copyright 2009

SARAH LONG BRIDGE
SPAN 1 S1 CURB STRINGER BAY 1

INSPECTED BY: JB	DATE: 6-5-2009	SCALE: 3/8" = 1'-0" H
& EGW		3/4" = 1'-0" V

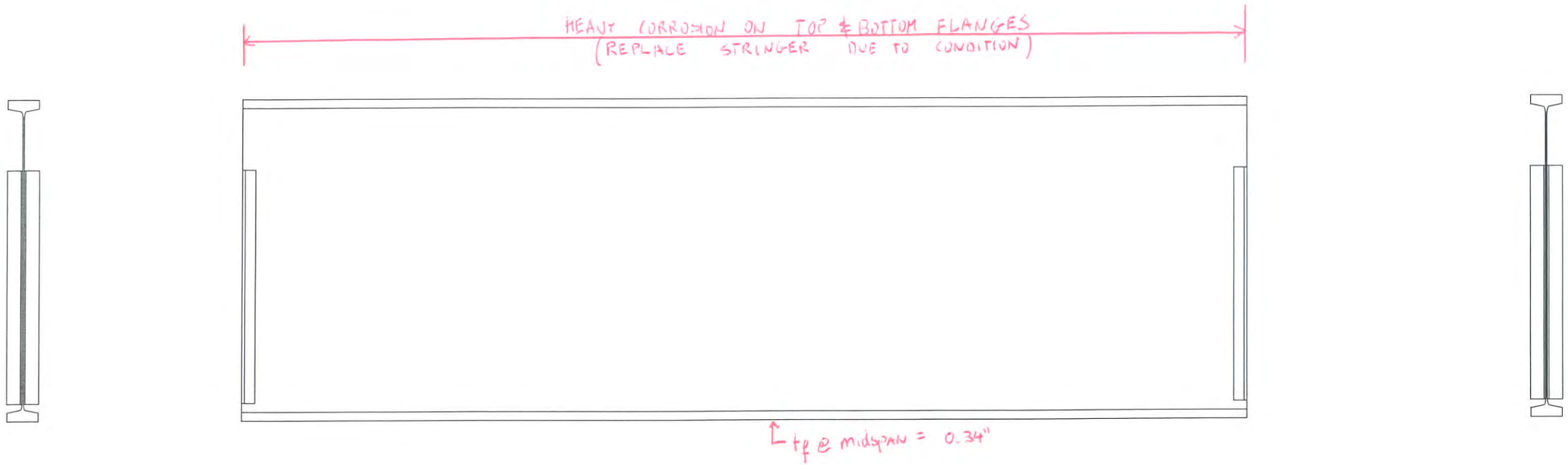

EAST ELEVATION
(LOOKING WEST)

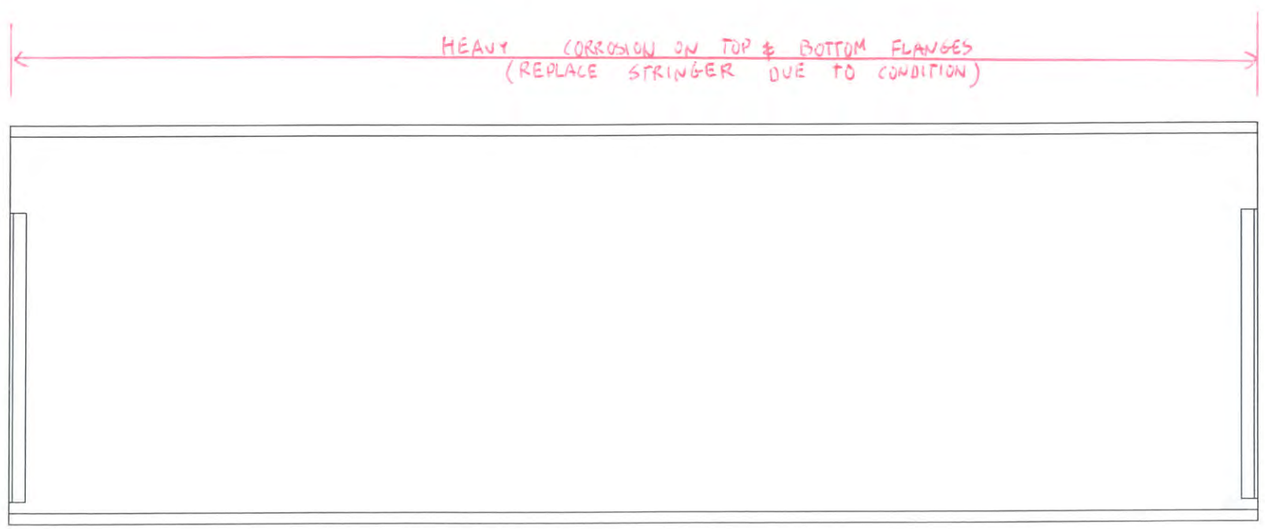

WEST ELEVATION
(LOOKING EAST)

Hoyle, Tanner Associates, Inc.
Consulting Engineers
150 Dow Street
Manchester, NH 03101-1227
Tel 603-669-5555, Fax 603-669-4168
Web Page: www.hoyletanner.com
© Copyright 2009

SARAH LONG BRIDGE
SPAN 1 S1 CURB STRINGER BAY 3

INSPECTED BY: JB & EGW	DATE: 6-5-2009	SCALE: ⅛" = 1'-0" H ¾" = 1'-0" V

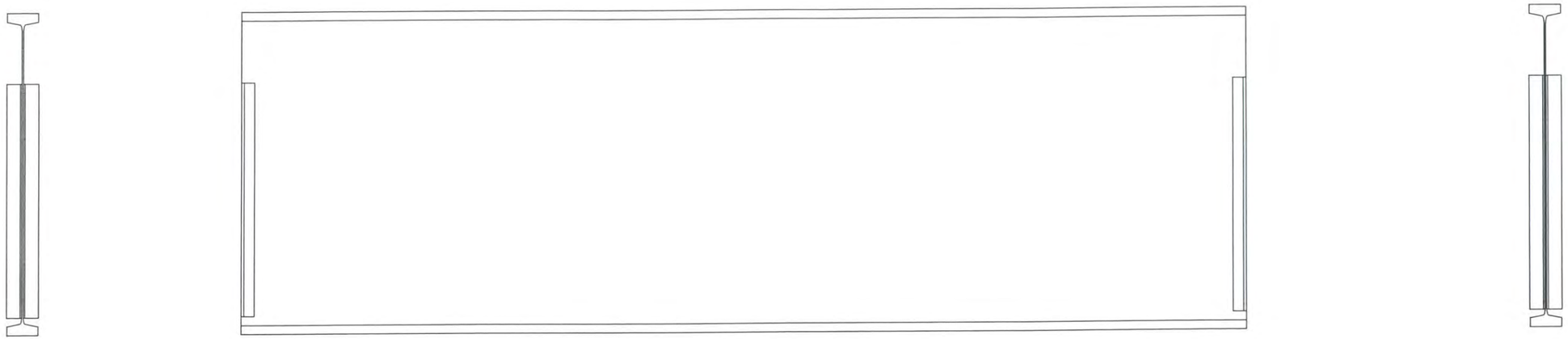

EAST ELEVATION
(LOOKING WEST)

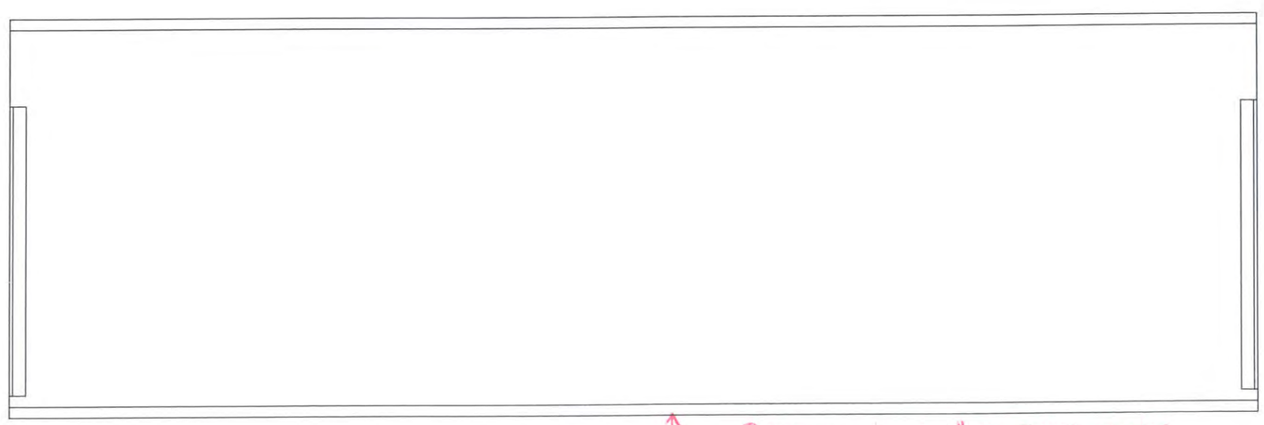

@ MIDSPAN $t_f = 0.40"$ @ TIP OF CALIPER
$t_f = 0.45"$ @ END OF CALIPER

WEST ELEVATION
(LOOKING EAST)

Hoyle, Tanner Associates, Inc.
Consulting Engineers
150 Dow Street.
Manchester, NH 03101-1227
Tel 603-669-5555, Fax 603-669-4168
Web Page: www.hoyletanner.com
© Copyright 2009

SARAH LONG BRIDGE
SPAN 1 S4 CURB STRINGER BAY 1

INSPECTED BY: JB	DATE: 5-29-2009	SCALE: 3/8" = 1'-0" H
@ E&W		3/4" = 1'-0" V

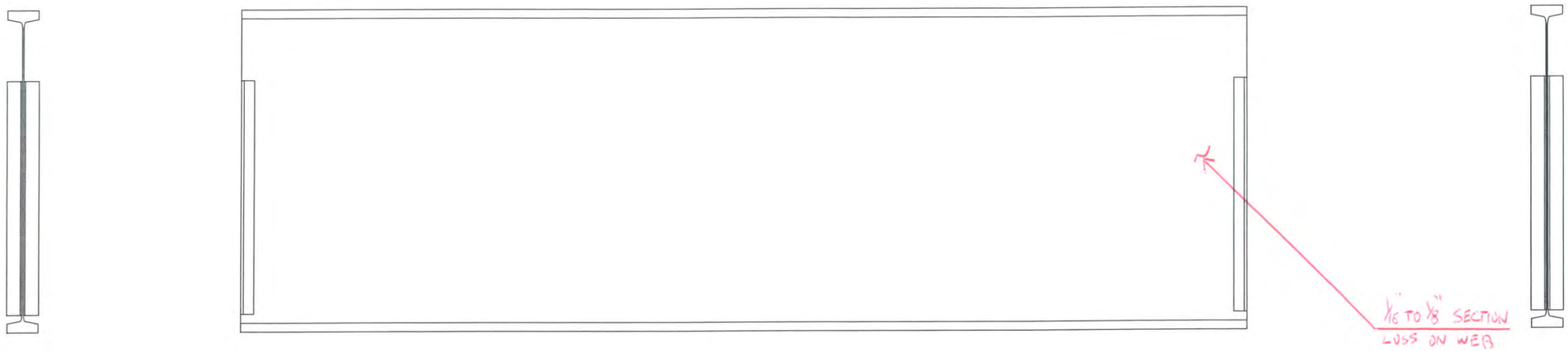

EAST ELEVATION
(LOOKING WEST)

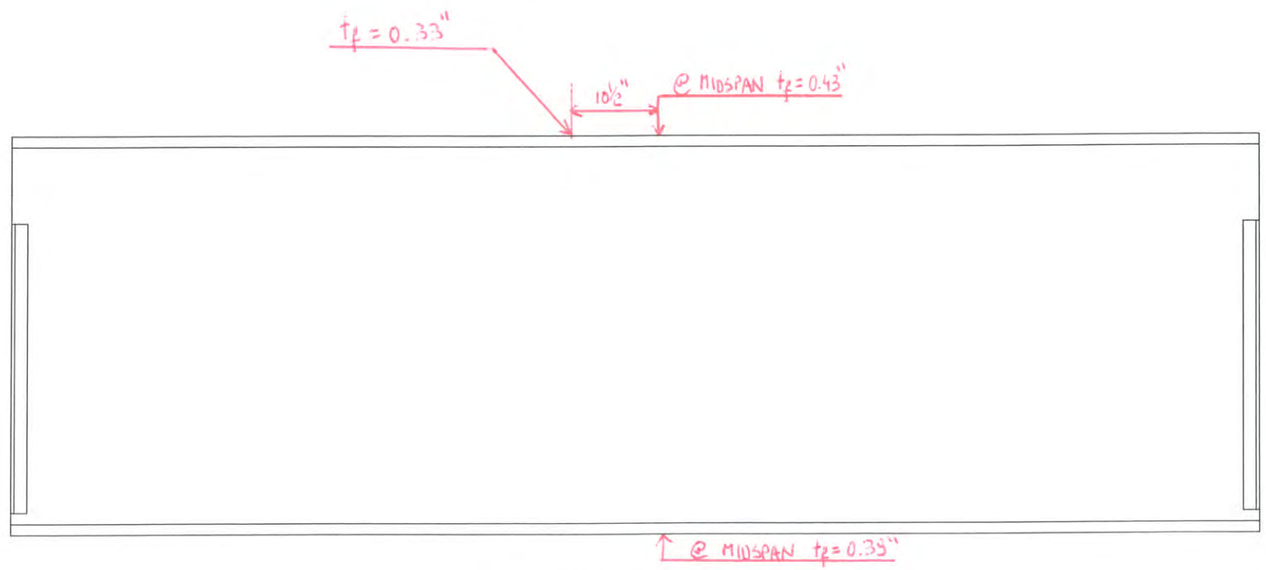

WEST ELEVATION
(LOOKING EAST)

Hoyle, Tanner Associates, Inc.
Consulting Engineers
150 Dow Street
Manchester, NH 03101-1227
Tel 603-669-5555, Fax 603-669-4168
Web Page: www.hoyletanner.com
© Copyright 2009

SARAH LONG BRIDGE
SPAN 2 S1 CURB STRINGER BAY 3

INSPECTED BY: JB & PGW	DATE: 6-5-2009	SCALE: ⅜" = 1'-0" H ¾" = 1'-0" V

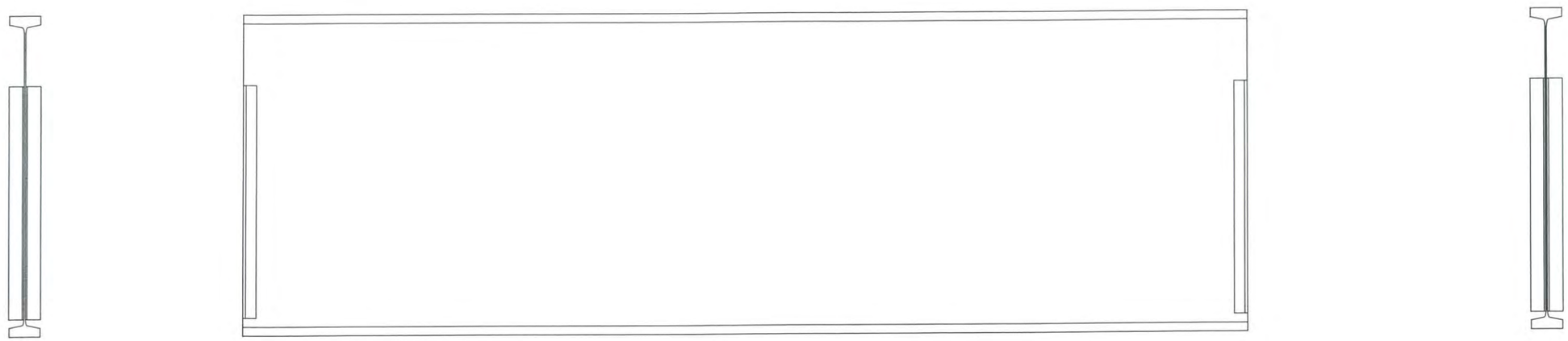

EAST ELEVATION
(LOOKING WEST)

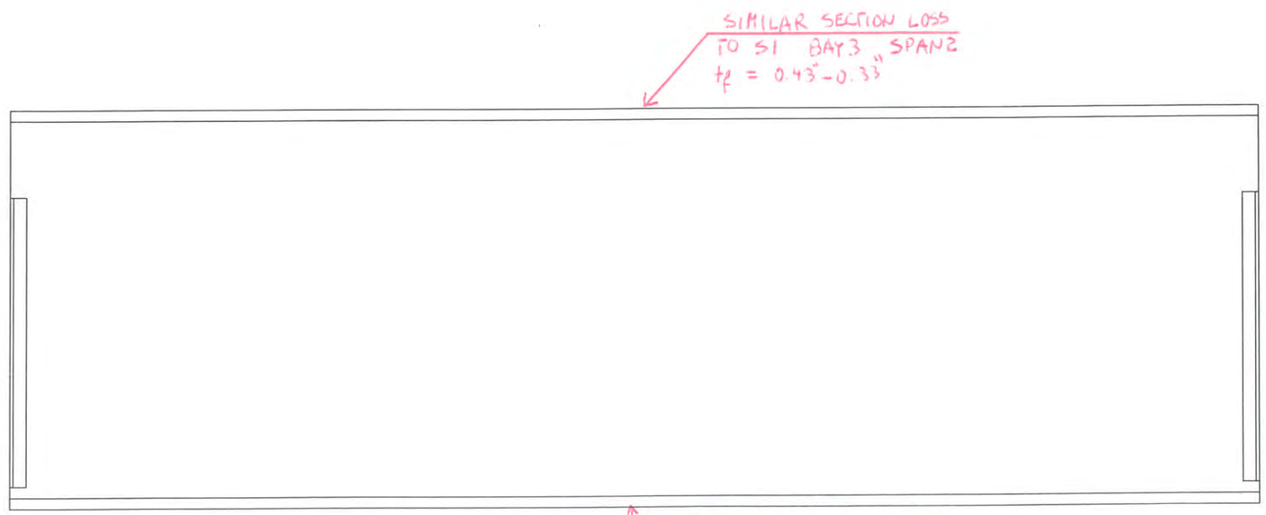

WEST ELEVATION
(LOOKING EAST)

Hoyle, Tanner Associates, Inc.
Consulting Engineers

150 Dow Street.
Manchester, NH 03101-1227
Tel 603-669-5555, Fax 603-669-4168
Web Page: www.hoyletanner.com
© Copyright 2009

SARAH LONG BRIDGE
SPAN 2 S1 CURB STRINGER BAY 2

INSPECTED BY: JB & EGW	DATE: 6-5-2003	SCALE: 3/8" = 1'-0" H 3/4" = 1'-0" V

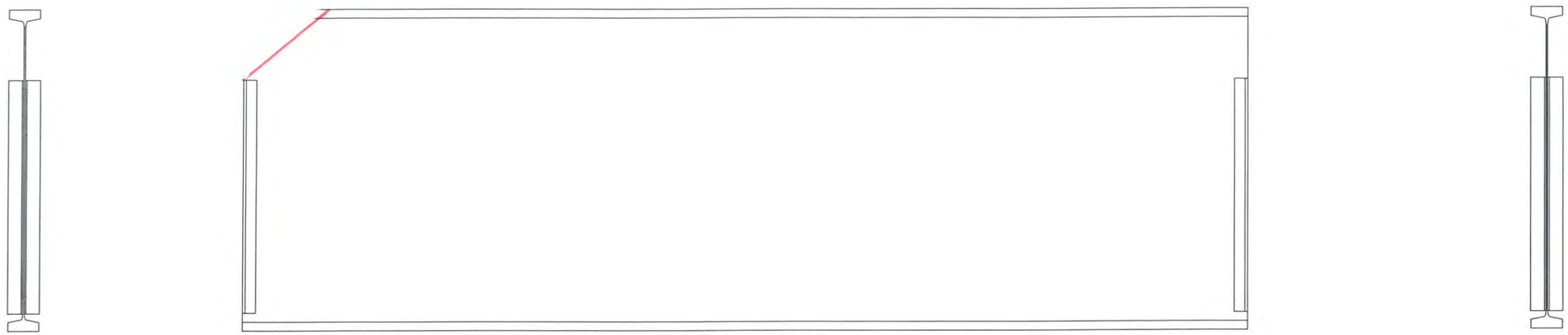

EAST ELEVATION
(LOOKING WEST)

WEST ELEVATION
(LOOKING EAST)

Hoyle, Tanner Associates, Inc.
Consulting Engineers
150 Dow Street.
Manchester, NH 03101–1227
Tel 603–669–5555, Fax 603–669–4168
Web Page: www.hoyletanner.com
© Copyright 2009

SARAH LONG BRIDGE
SPAN 2 S4 CURB STRINGER BAY 1

INSPECTED BY: JU	DATE: 5-29-2009	SCALE: 3/8" = 1'–0" H
℄ EGW		3/4" = 1'–0" V

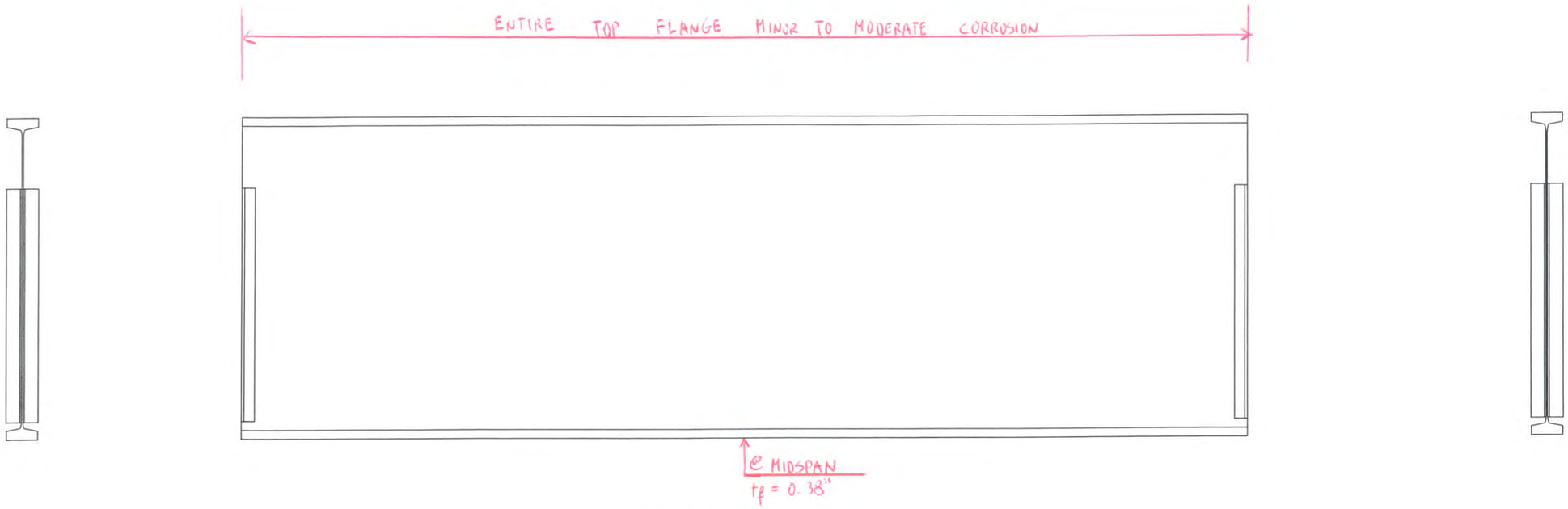

EAST ELEVATION
(LOOKING WEST)

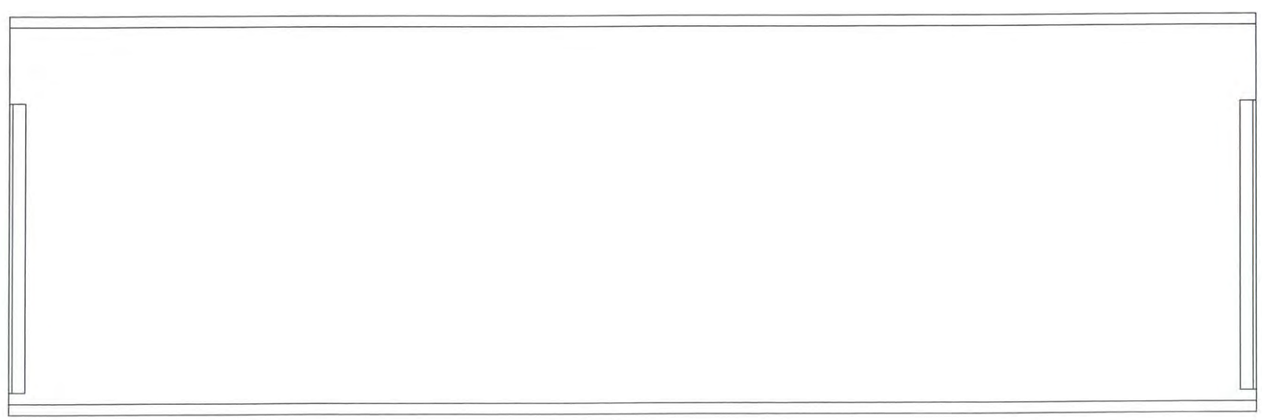

WEST ELEVATION
(LOOKING EAST)

Hoyle, Tanner Associates, Inc.
Consulting Engineers

150 Dow Street.
Manchester, NH 03101–1227
Tel 603–669–5555, Fax 603–669–4168
Web Page: www.hoyletanner.com
© Copyright 2009

SARAH LONG BRIDGE
SPAN 3 S1 CURB STRINGER BAY 1

INSPECTED BY: JB	DATE: 6-5-2009	SCALE: ⅜" = 1'–0" H
& EGW		¾" = 1'–0" V

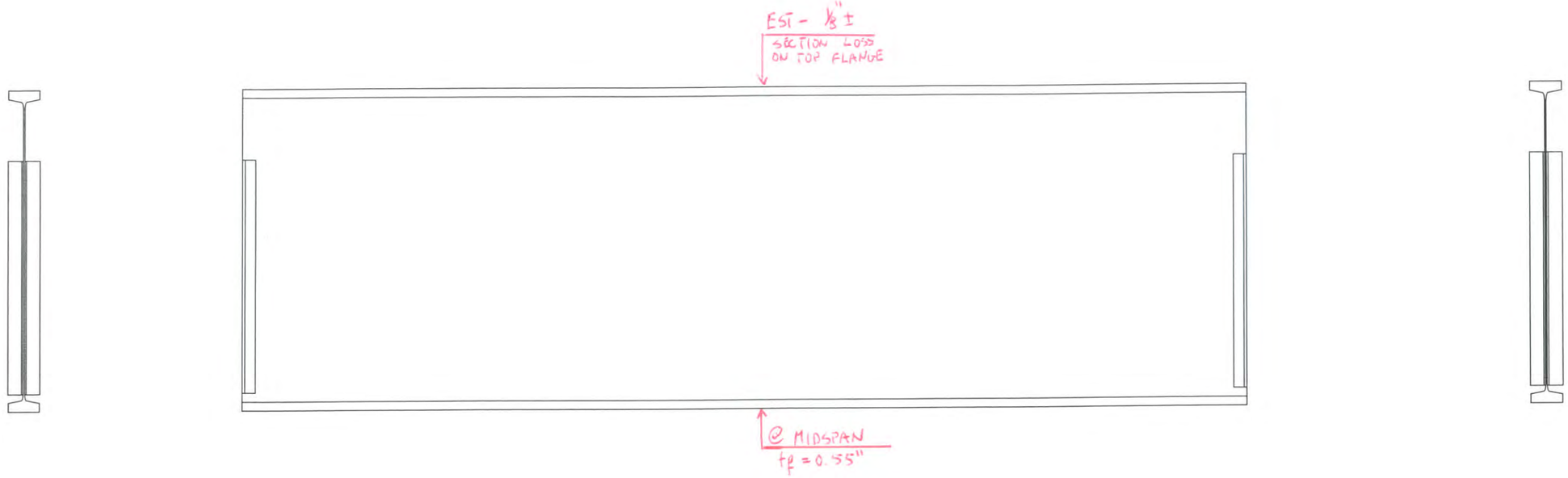

EAST ELEVATION
(LOOKING WEST)

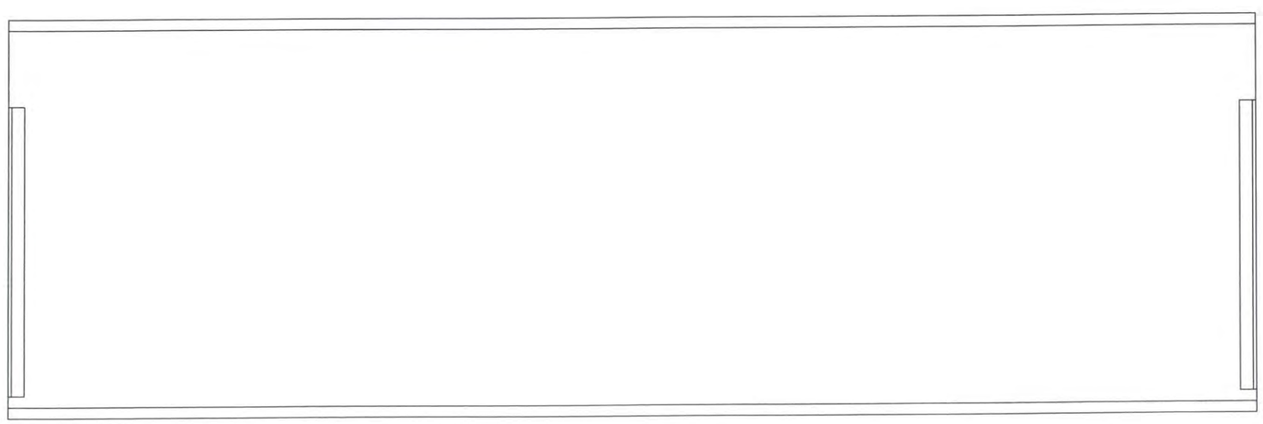

WEST ELEVATION
(LOOKING EAST)

Hoyle, Tanner Associates, Inc.
Consulting Engineers

150 Dow Street.
Manchester, NH 03101-1227
Tel 603-669-5555, Fax 603-669-4168
Web Page: www.hoyletanner.com
© Copyright 2009

SARAH LONG BRIDGE
SPAN 3 S4 CURB STRINGER BAY 3

INSPECTED BY: JB & EGW	DATE: 5-29-2009	SCALE: 3/8" = 1'-0" H 3/4" = 1'-0" V

EAST ELEVATION
(LOOKING WEST)

WEST ELEVATION
(LOOKING EAST)

Hoyle, Tanner Associates, Inc.
Consulting Engineers

150 Dow Street
Manchester, NH 03101-1227
Tel 603-669-5555, Fax 603-669-4168
Web Page: www.hoyletanner.com
© Copyright 2009

SARAH LONG BRIDGE
SPAN 4 S1 CURB STRINGER BAY 3

INSPECTED BY: JB & EGW	DATE: 6-5-2003	SCALE: 3/8" = 1'-0" H 3/4" = 1'-0" V

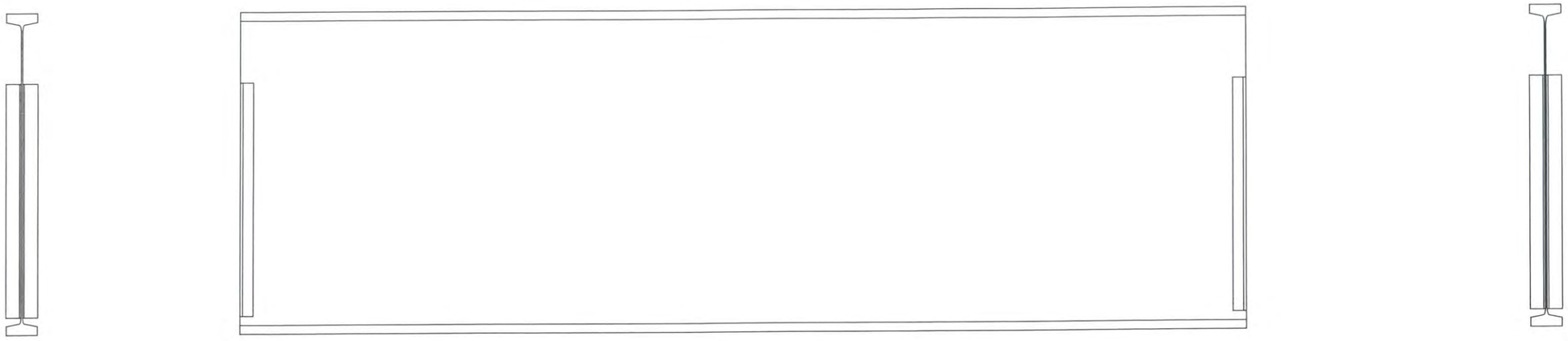

EAST ELEVATION
(LOOKING WEST)

WEST ELEVATION
(LOOKING EAST)

Hoyle, Tanner Associates, Inc.
Consulting Engineers
150 Dow Street.
Manchester, NH 03101-1227
Tel 603-669-5555, Fax 603-669-4168
Web Page: www.hoyletanner.com
© Copyright 2009

SARAH LONG BRIDGE
SPAN 4 S1 CURB STRINGER BAY 1

INSPECTED BY: JB	DATE: 5-29-2009	SCALE: 3/8" = 1'-0" H
& EGW		3/4" = 1'-0" V

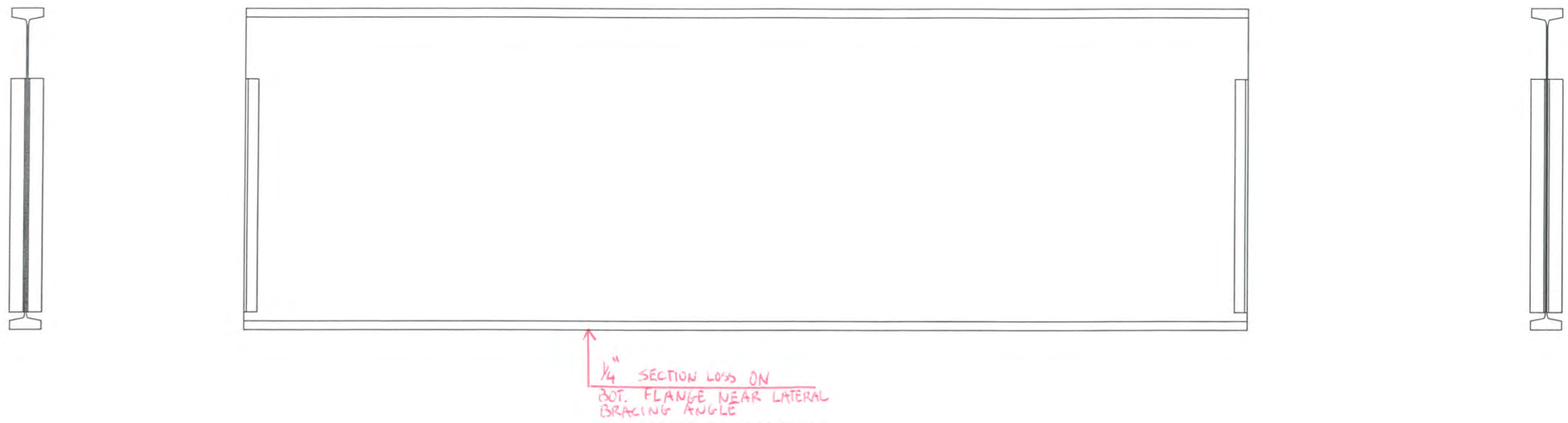

EAST ELEVATION
(LOOKING WEST)

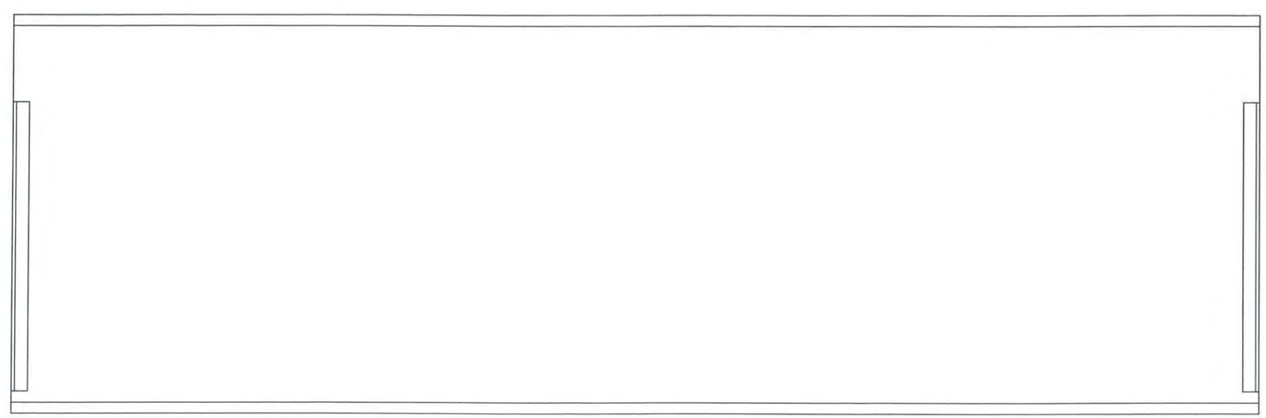

WEST ELEVATION
(LOOKING EAST)

Hoyle, Tanner Associates, Inc.
Consulting Engineers
150 Dow Street.
Manchester, NH 03101-1227
Tel 603-669-5555, Fax 603-669-4168
Web Page: www.hoyletanner.com
© Copyright 2009

SARAH LONG BRIDGE
SPAN 4 S3 ROADWAY STRINGER BAY 3

INSPECTED BY: JB	DATE: 5-29-2009	SCALE: 3/8" = 1'-0" H
& EGW		3/4" = 1'-0" V

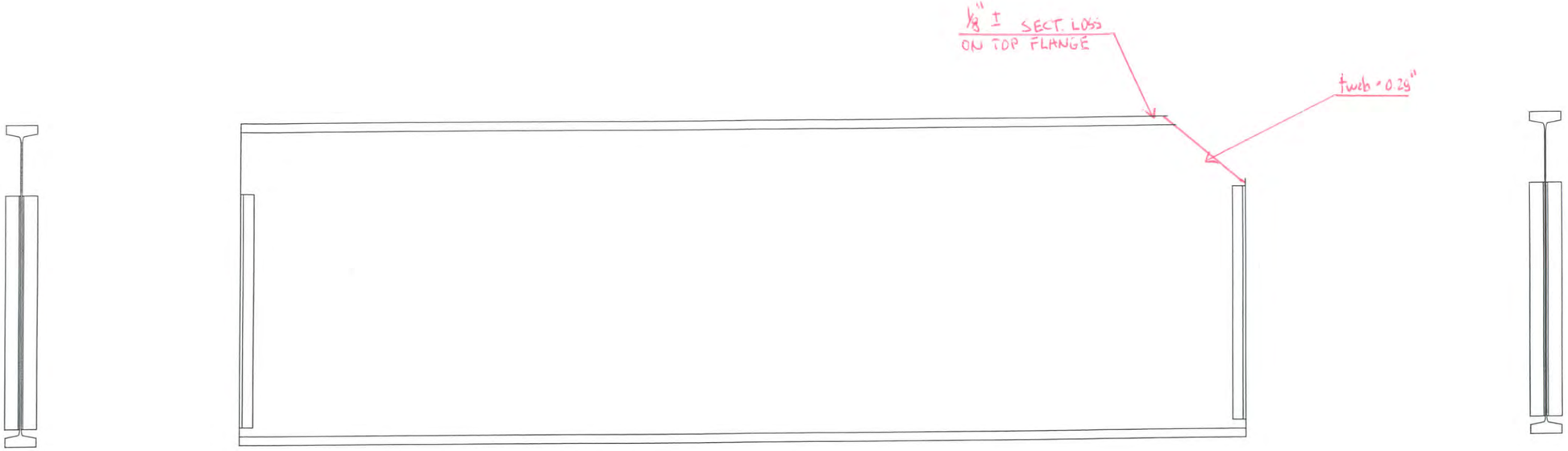

EAST ELEVATION
(LOOKING WEST)

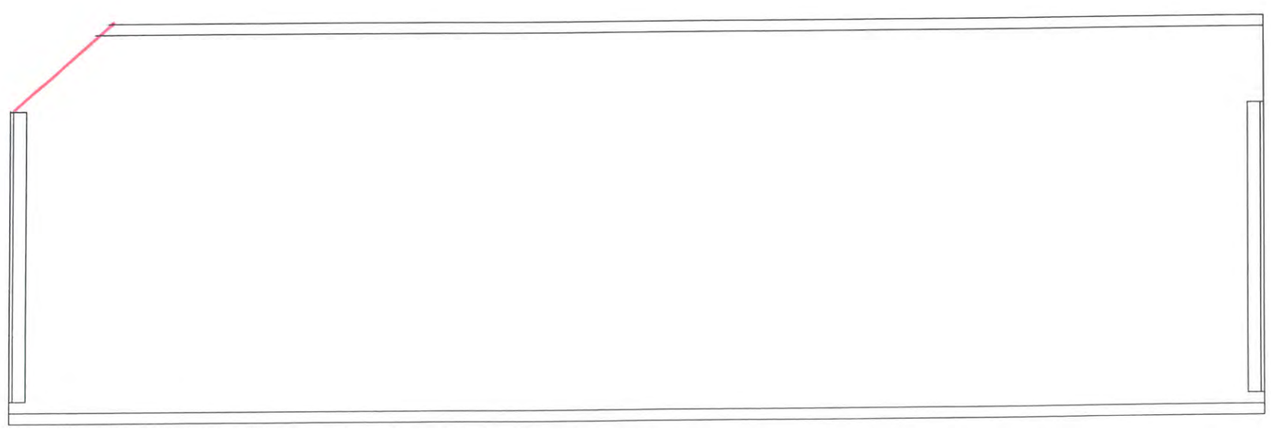

WEST ELEVATION
(LOOKING EAST)

Hoyle, Tanner Associates, Inc.
Consulting Engineers

150 Dow Street,
Manchester, NH 03101-1227
Tel 603-669-5555, Fax 603-669-4168
Web Page: www.hoyletanner.com
© Copyright 2009

SARAH LONG BRIDGE
SPAN 4 S4 CURB STRINGER BAY 1

INSPECTED BY: JAB & EGW	DATE: 5-29-2009	SCALE: 3/8" = 1'-0" H 3/4" = 1'-0" V

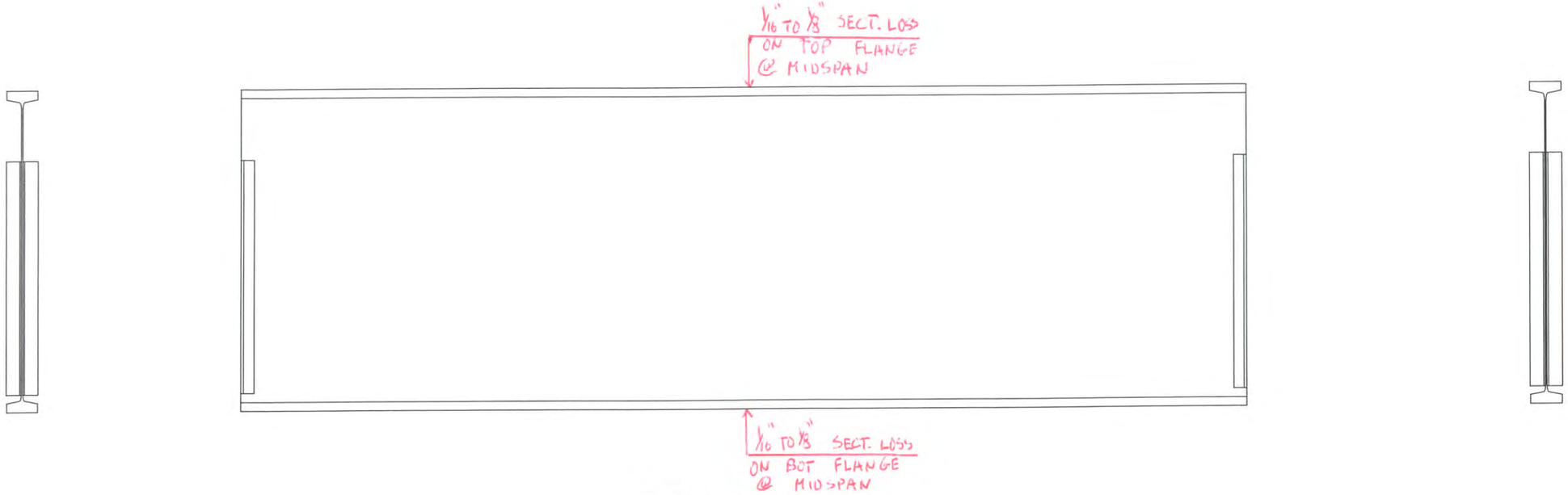

EAST ELEVATION
(LOOKING WEST)

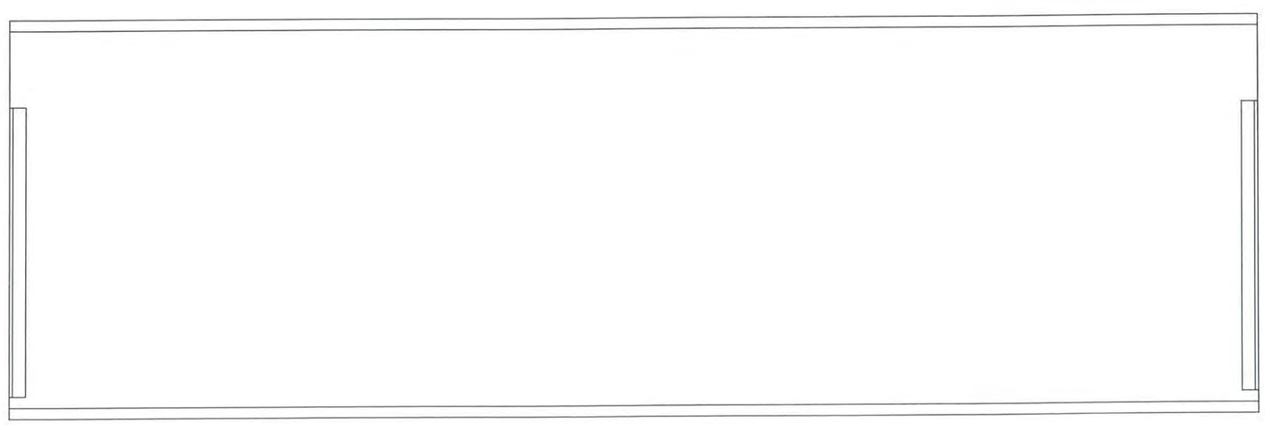

WEST ELEVATION
(LOOKING EAST)

Hoyle, Tanner Associates, Inc.
Consulting Engineers
150 Dow Street.
Manchester, NH 03101-1227
Tel 603-669-5555, Fax 603-669-4168
Web Page: www.hoyletanner.com
© Copyright 2009

SARAH LONG BRIDGE
SPAN 4 S4 CURB STRINGER BAY 3

INSPECTED BY: JB	DATE: 5-29-2009	SCALE: 3/8" = 1'-0" H
& EGW		3/4" = 1'-0" V

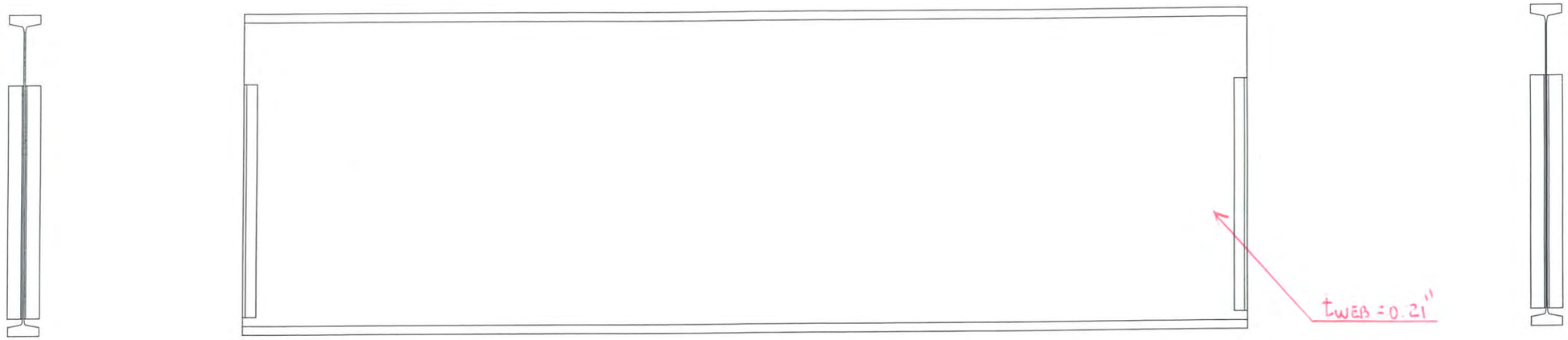

EAST ELEVATION
(LOOKING WEST)

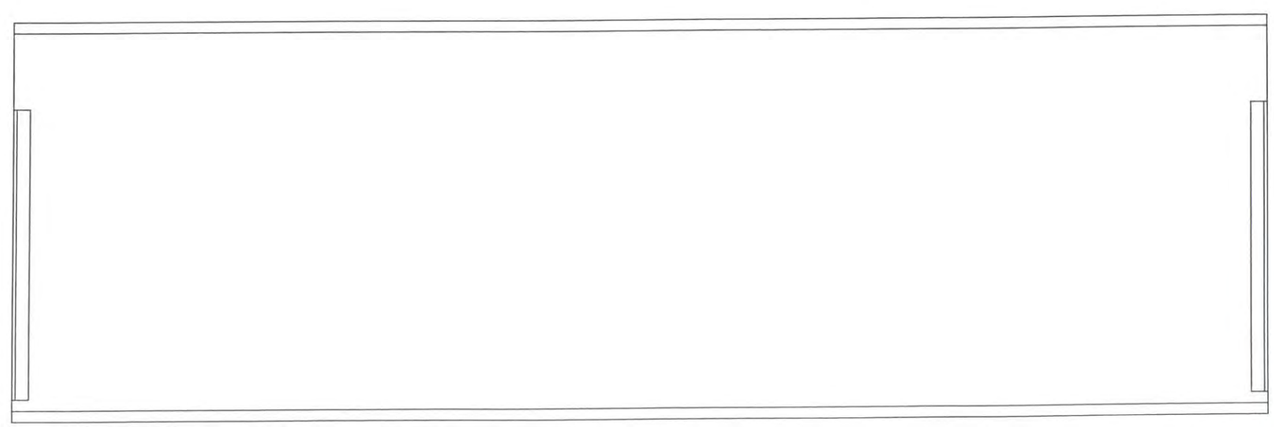

WEST ELEVATION
(LOOKING EAST)

Hoyle, Tanner Associates, Inc.
Consulting Engineers

150 Dow Street.
Manchester, NH 03101-1227
Tel 603-669-5555, Fax 603-669-4168
Web Page: www.hoyletanner.com
© Copyright 2009

SARAH LONG BRIDGE

SPAN ~~5~~ 54 CURB STRINGER BAY 3

INSPECTED BY: JB & EGW	DATE: 5-29-2009	SCALE: ⅜" = 1'-0" H ¾" = 1'-0" V

EAST ELEVATION
(LOOKING WEST)

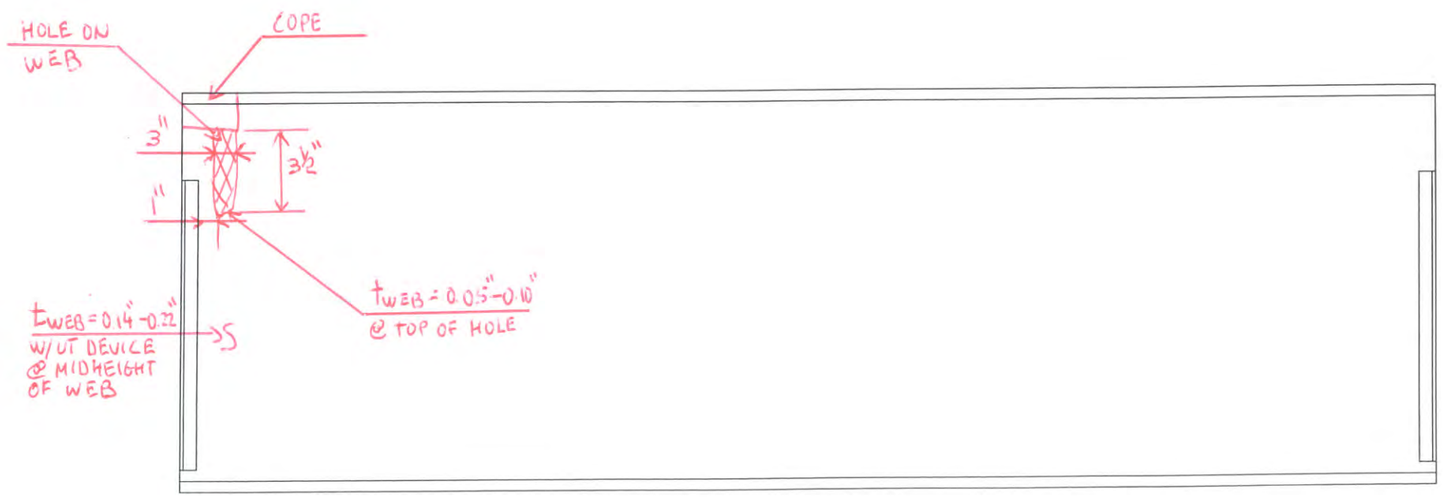

WEST ELEVATION
(LOOKING EAST)

Hoyle, Tanner Associates, Inc.
Consulting Engineers
150 Dow Street,
Manchester, NH 03101–1227
Tel 603–669–5555, Fax 603–669–4168
Web Page: www.hoyletanner.com
© Copyright 2009

SARAH LONG BRIDGE
SPAN 6 S1 CURB STRINGER BAY 3

INSPECTED BY: JTB	DATE:	SCALE: ⅜" = 1'–0" H
‡ EGW		¾" = 1'–0" V

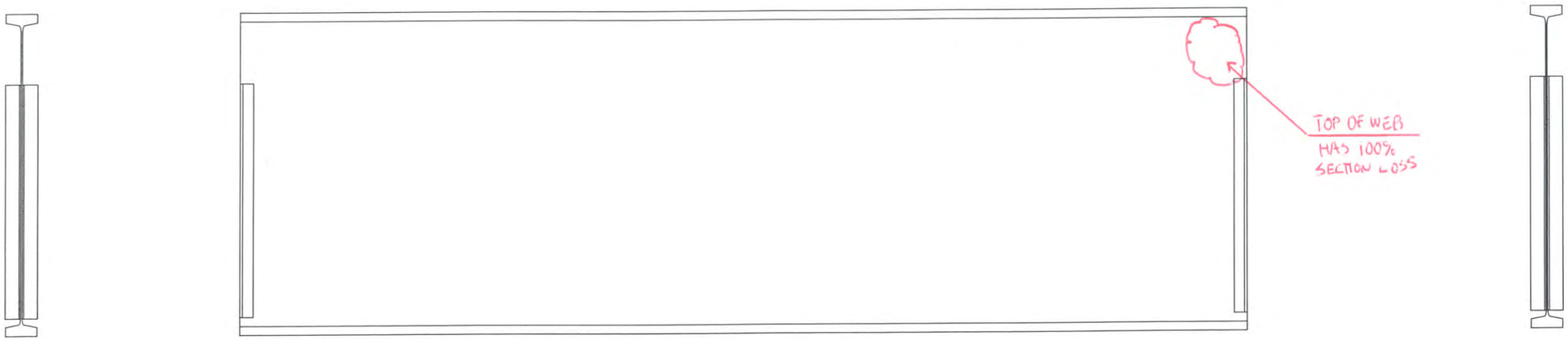

EAST ELEVATION
(LOOKING WEST)

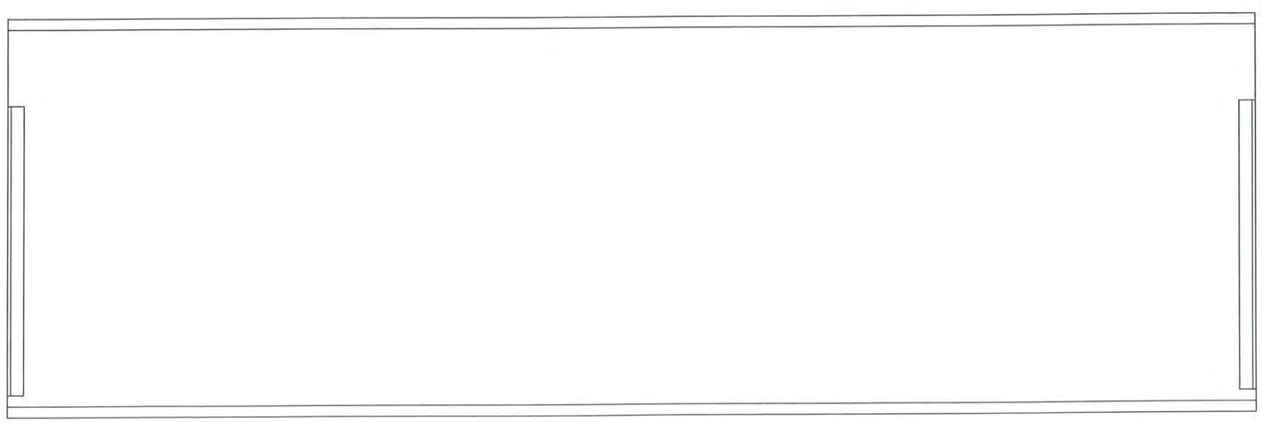

WEST ELEVATION
(LOOKING EAST)

Hoyle, Tanner Associates, Inc.
Consulting Engineers

150 Dow Street.
Manchester, NH 03101-1227
Tel 603-669-5555, Fax 603-669-4168
Web Page: www.hoyletanner.com
© Copyright 2009

SARAH LONG BRIDGE
SPAN 6 S2 ROADWAY STRINGER BAY 3

INSPECTED BY: JB & EGW	DATE: 5-29-2009	SCALE: 3/8" = 1'-0" H 3/4" = 1'-0" V

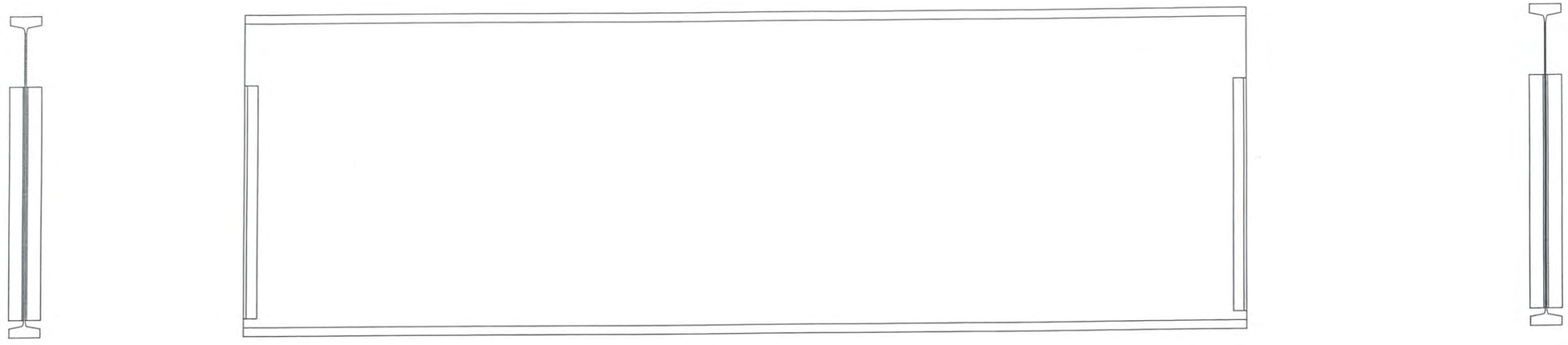

EAST ELEVATION
(LOOKING WEST)

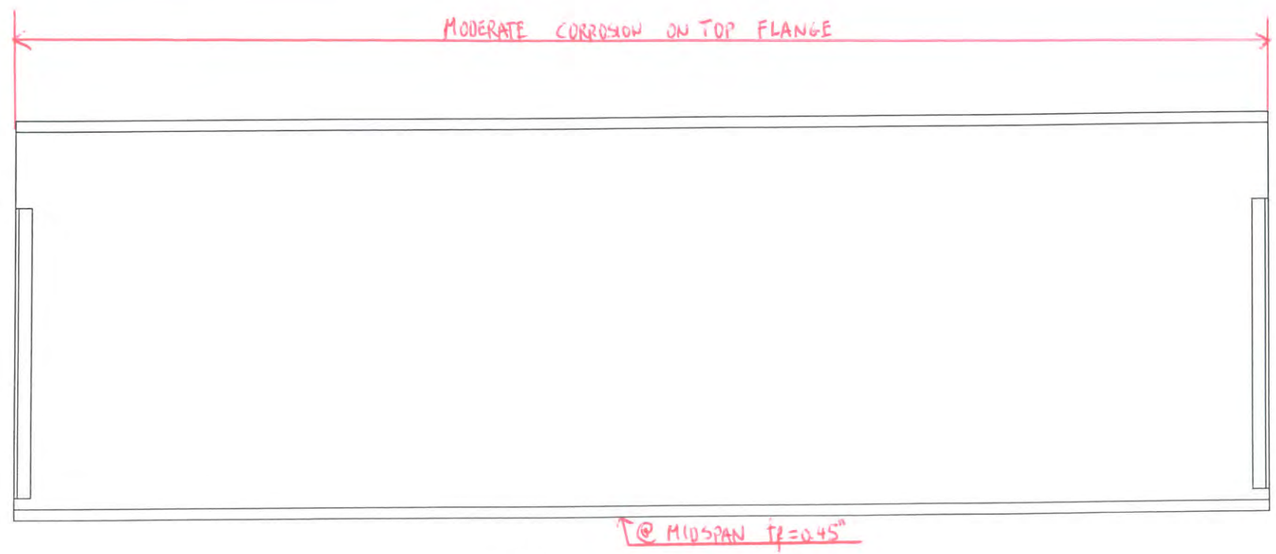

WEST ELEVATION
(LOOKING EAST)

Hoyle, Tanner Associates, Inc.
Consulting Engineers
150 Dow Street.
Manchester, NH 03101-1227
Tel 603-669-5555, Fax 603-669-4168
Web Page: www.hoyletanner.com
© Copyright 2009

SARAH LONG BRIDGE
SPAN 6 S4 CURB STRINGER BAY 2

INSPECTED BY: JB	DATE:	SCALE: 3/8" = 1'-0" H
EGW		3/4" = 1'-0" V

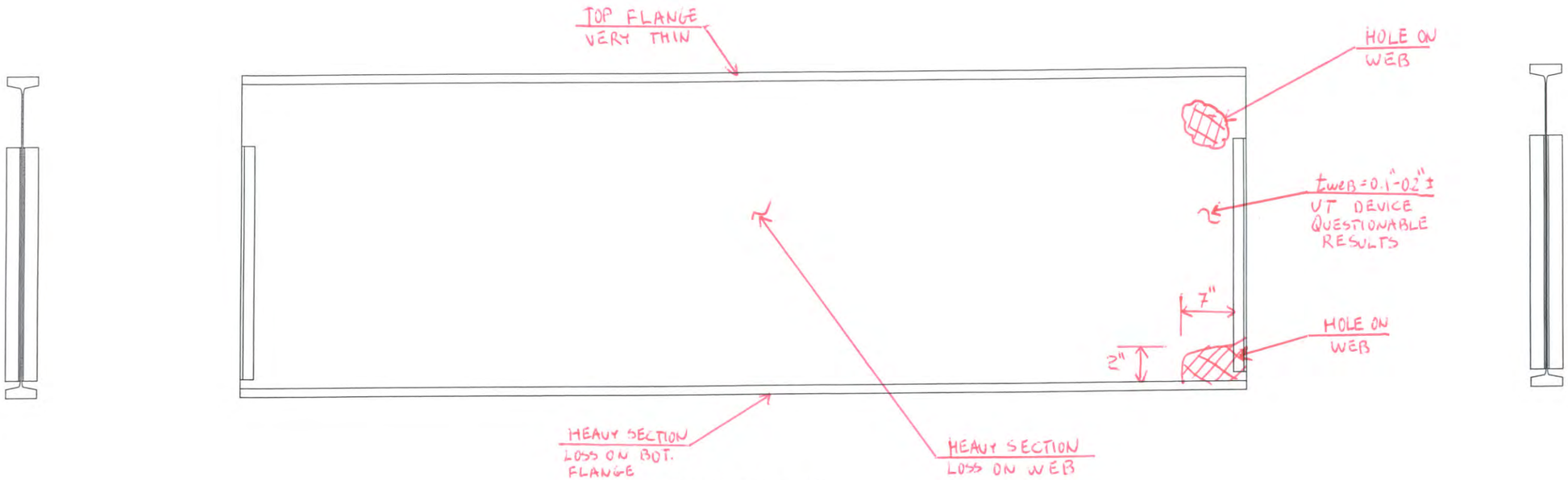

EAST ELEVATION
(LOOKING WEST)

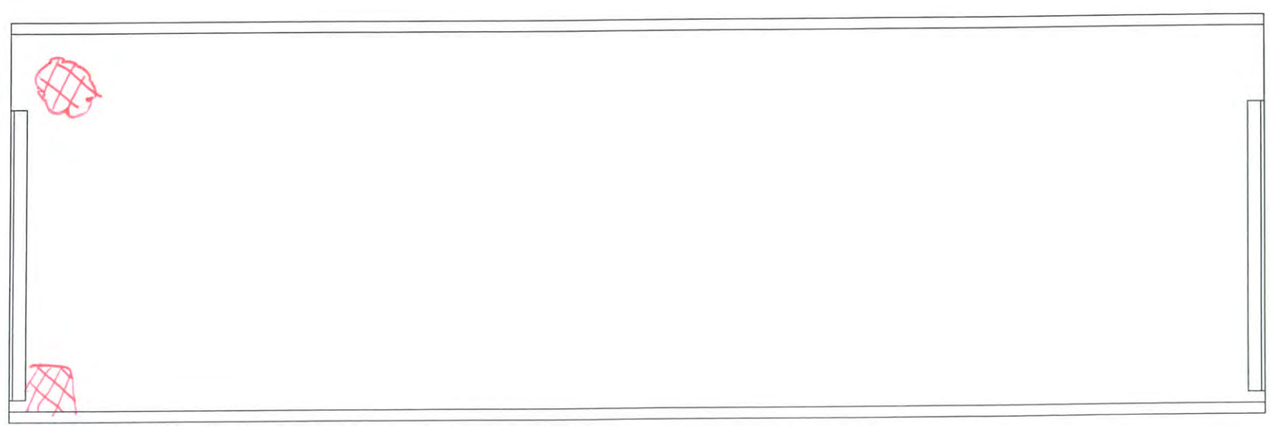

WEST ELEVATION
(LOOKING EAST)

Hoyle, Tanner Associates, Inc.
Consulting Engineers

150 Dow Street
Manchester, NH 03101-1227
Tel 603-669-5555, Fax 603-669-4168
Web Page: www.hoyletanner.com
© Copyright 2009

SARAH LONG BRIDGE
SPAN 6 S4 CURB STRINGER BAY 3

INSPECTED BY: JB & EGW	DATE:	SCALE: 3/8" = 1'-0" H 3/4" = 1'-0" V

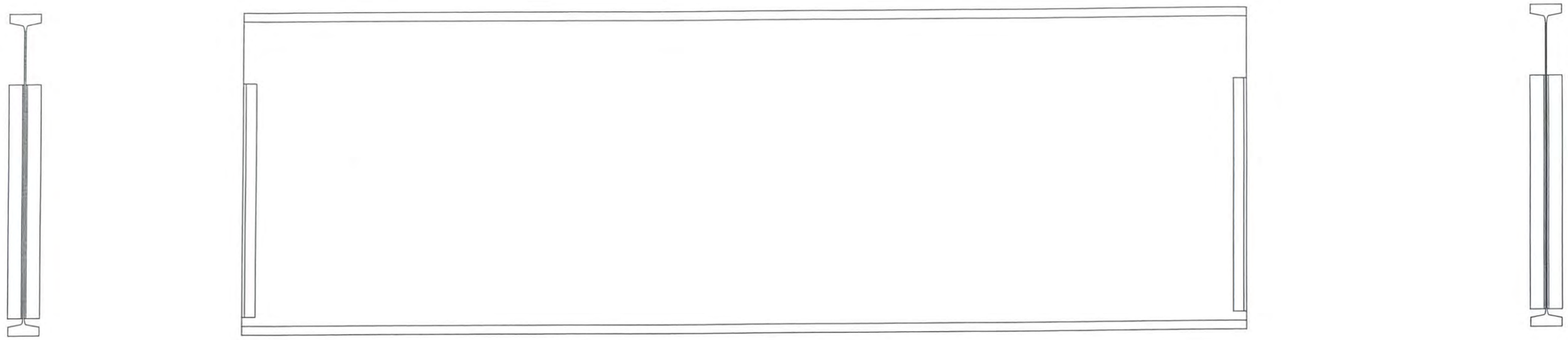

EAST ELEVATION
(LOOKING WEST)

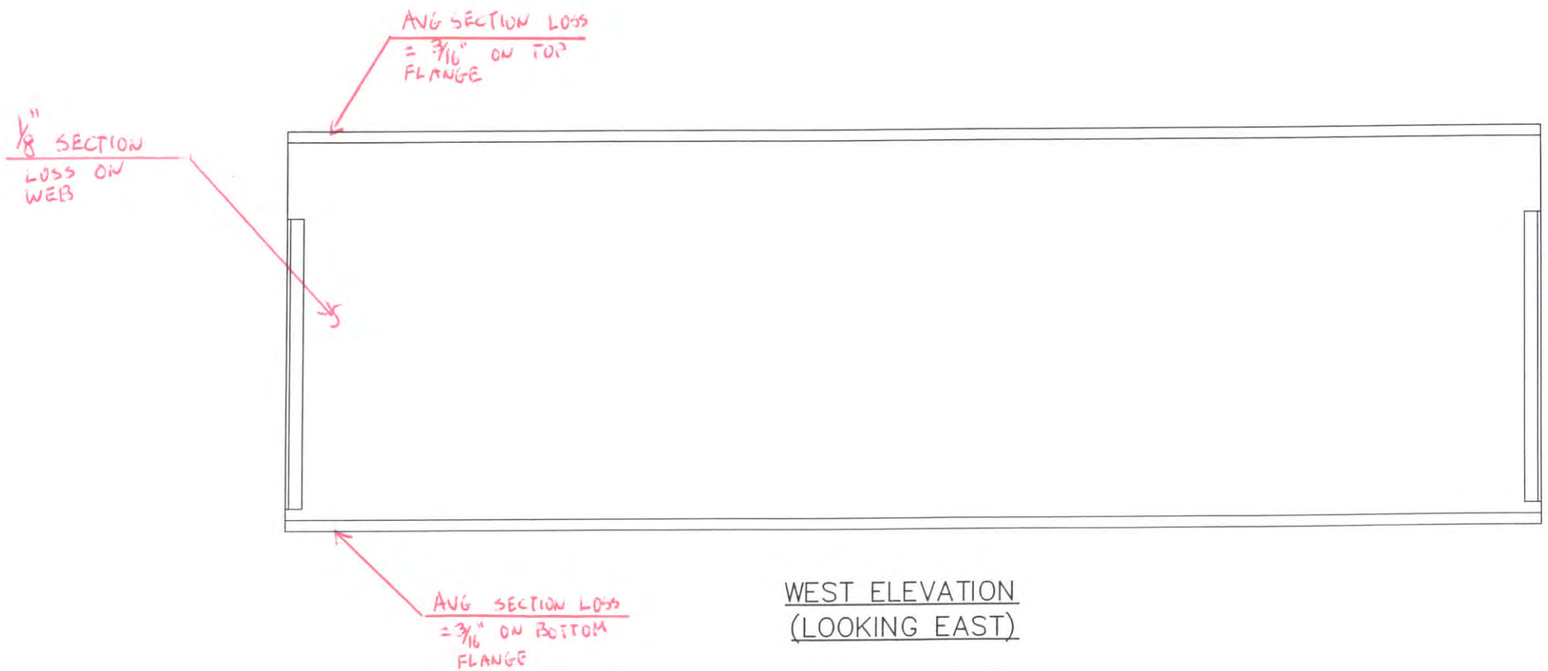

WEST ELEVATION
(LOOKING EAST)

Hoyle, Tanner Associates, Inc.
Consulting Engineers
150 Dow Street.
Manchester, NH 03101-1227
Tel 603-669-5555, Fax 603-669-4168
Web Page: www.hoyletanner.com
© Copyright 2009

SARAH LONG BRIDGE
SPAN 7 S1 CURB STRINGER BAY 3

INSPECTED BY: JB	DATE:	SCALE: 3/8" = 1'-0" H
& EGW		3/4" = 1'-0" V

EAST ELEVATION
(LOOKING WEST)

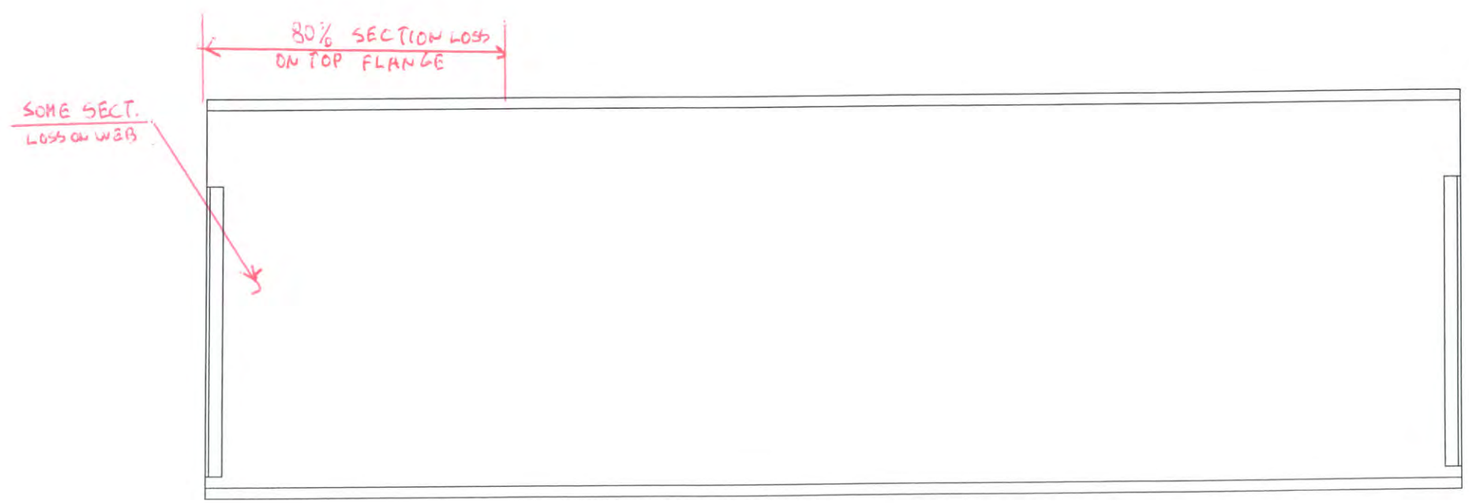

WEST ELEVATION
(LOOKING EAST)

Hoyle, Tanner Associates, Inc.
Consulting Engineers
150 Dow Street.
Manchester, NH 03101-1227
Tel 603-669-5555, Fax 603-669-4168
Web Page: www.hoyletanner.com
© Copyright 2009

SARAH LONG BRIDGE
SPAN 8 S1 CURB STRINGER BAY 3

INSPECTED BY: JB & EGW	DATE: 6-3-2009	SCALE: 3/8" = 1'-0" H 3/4" = 1'-0" V

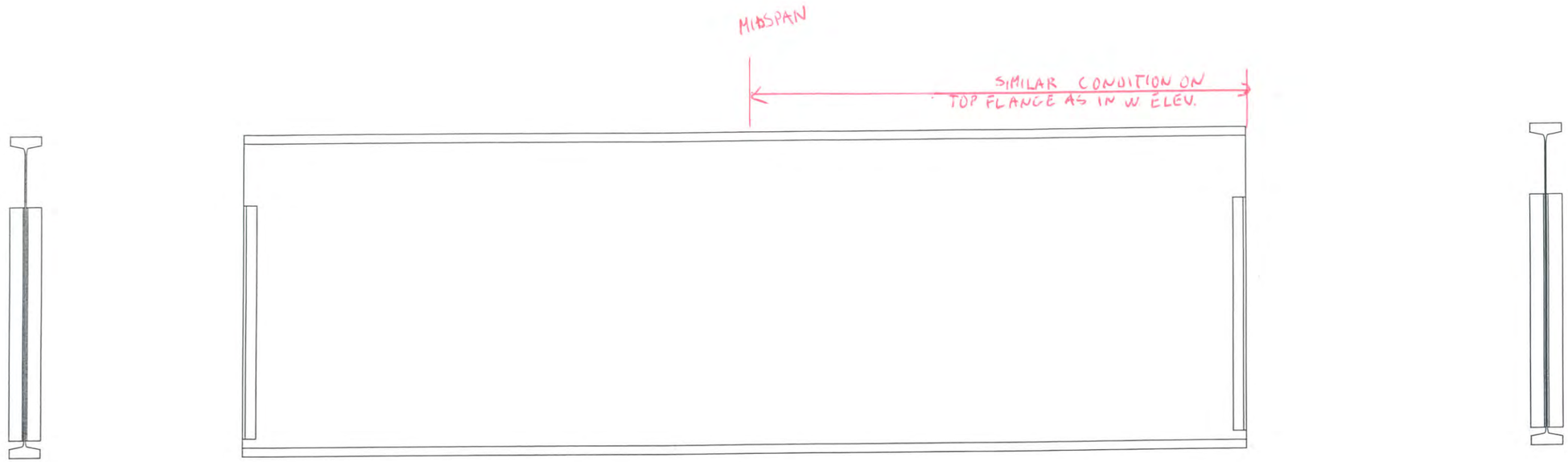

EAST ELEVATION
(LOOKING WEST)

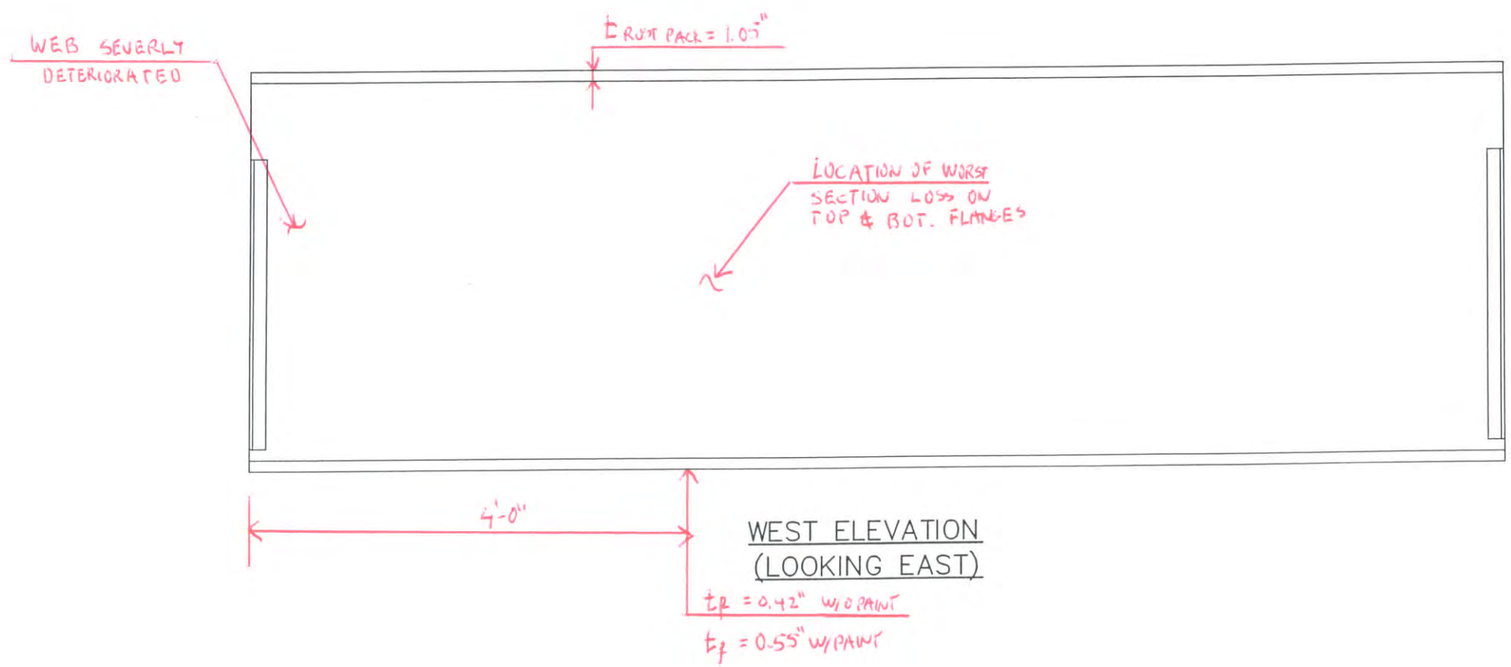

WEST ELEVATION
(LOOKING EAST)

Hoyle, Tanner Associates, Inc.
Consulting Engineers
150 Dow Street,
Manchester, NH 03101-1227
Tel 603-669-5555, Fax 603-669-4168
Web Page: www.hoyletanner.com
© Copyright 2009

SARAH LONG BRIDGE
SPAN 8 S4 CURB STRINGER BAY 3

INSPECTED BY: JB & EGW	DATE: 6-2-2003	SCALE: 3/8" = 1'-0" H 3/4" = 1'-0" V

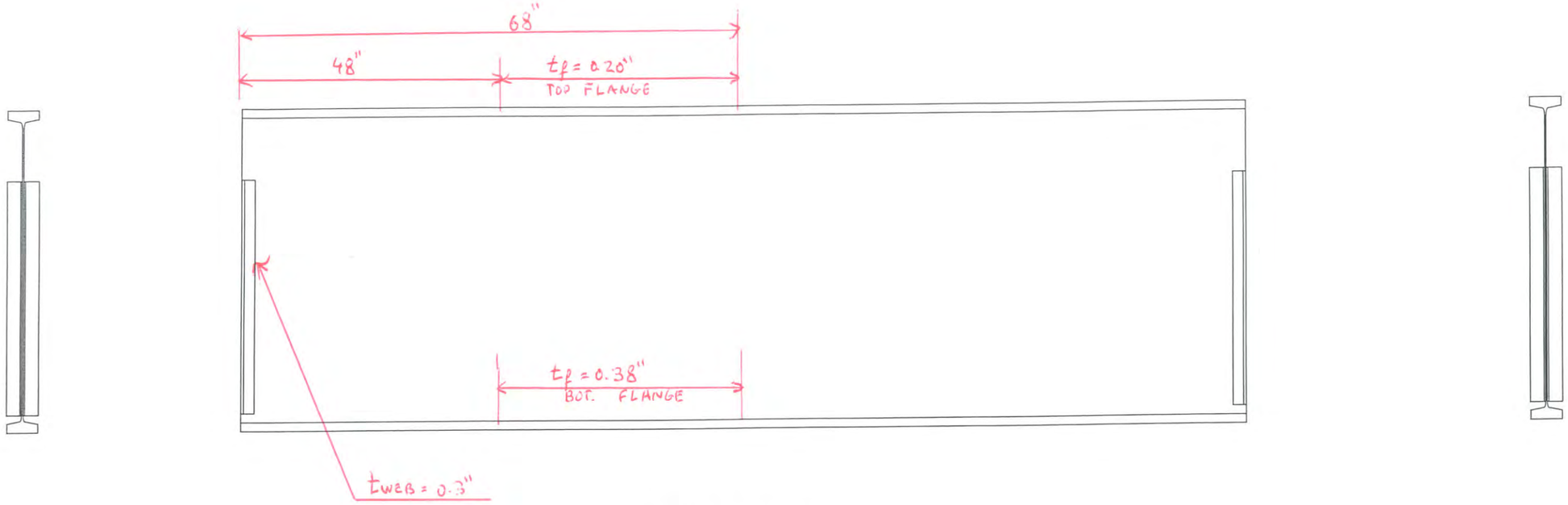

EAST ELEVATION
(LOOKING WEST)

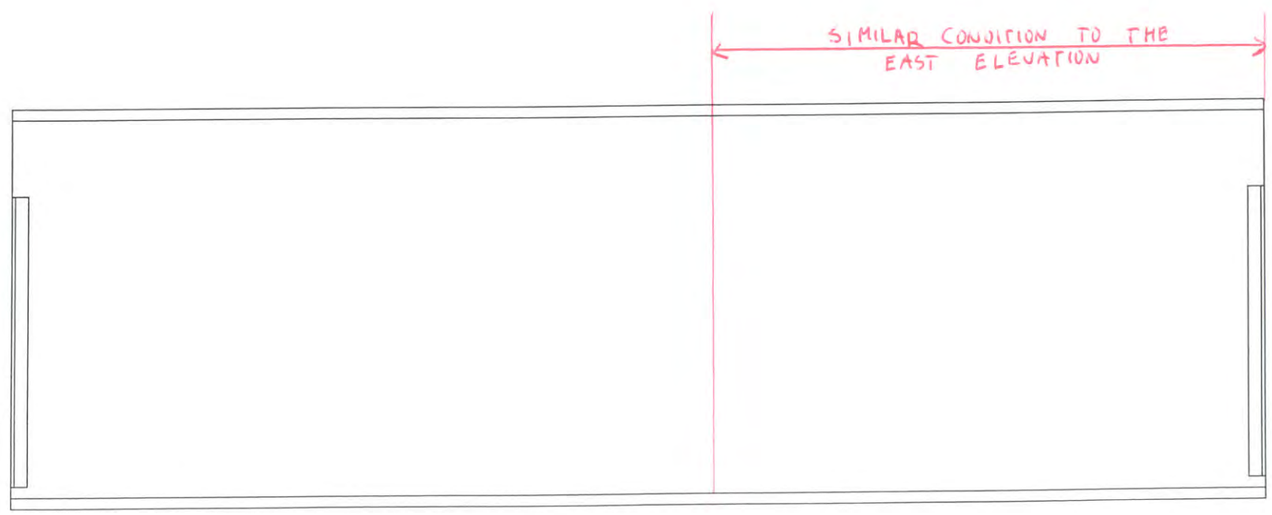

WEST ELEVATION
(LOOKING EAST)

Hoyle, Tanner Associates, Inc.
Consulting Engineers

150 Dow Street.
Manchester, NH 03101-1227
Tel 603-669-5555, Fax 603-669-4168
Web Page: www.hoyletanner.com
© Copyright 2009

SARAH LONG BRIDGE
SPAN 9 S1 CURB STRINGER BAY 1

INSPECTED BY: JB	DATE:	SCALE: 3/8" = 1'-0" H
JEGW		3/4" = 1'-0" V

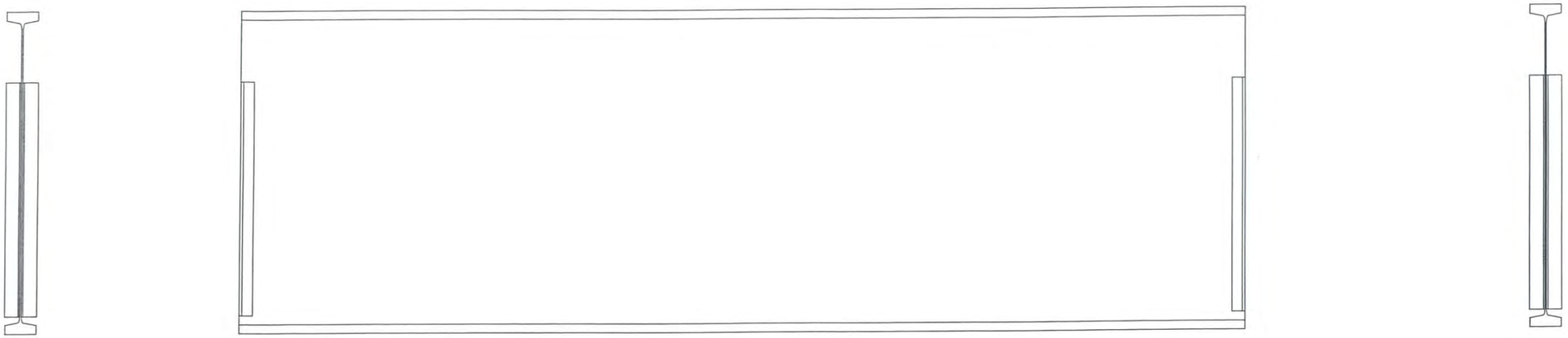

EAST ELEVATION
(LOOKING WEST)

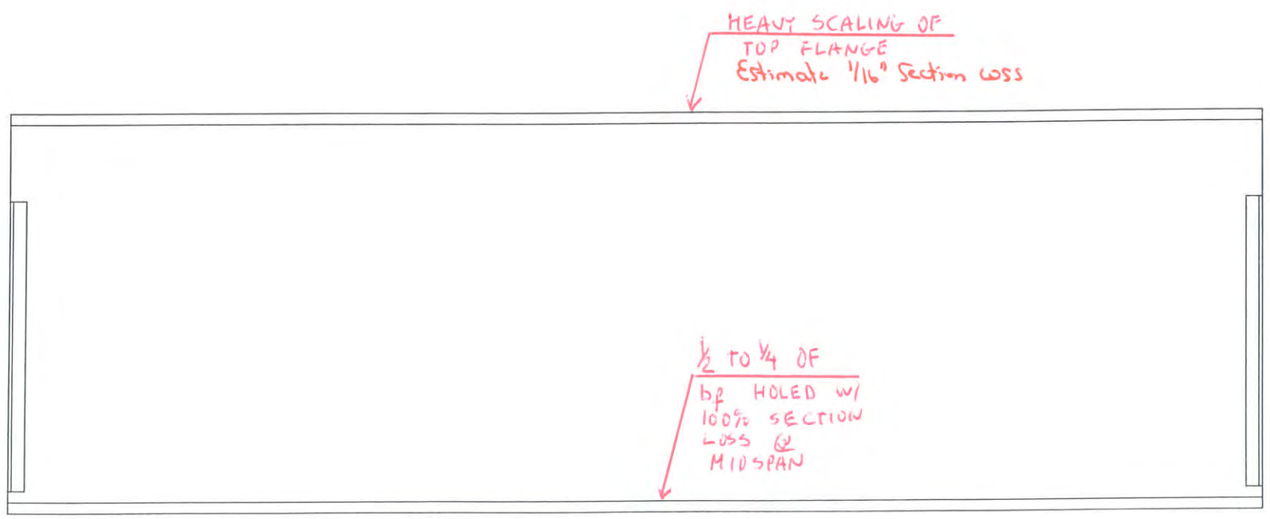

WEST ELEVATION
(LOOKING EAST)

Hoyle, Tanner Associates, Inc.
Consulting Engineers

150 Dow Street.
Manchester, NH 03101-1227
Tel 603-669-5555, Fax 603-669-4168
Web Page: www.hoyletanner.com
© Copyright 2009

SARAH LONG BRIDGE
SPAN 9 S4 CURB STRINGER BAY1

INSPECTED BY: JB & EGW	DATE: 6-1-2009	SCALE: ⅜" = 1'-0" H ¾" = 1'-0" V

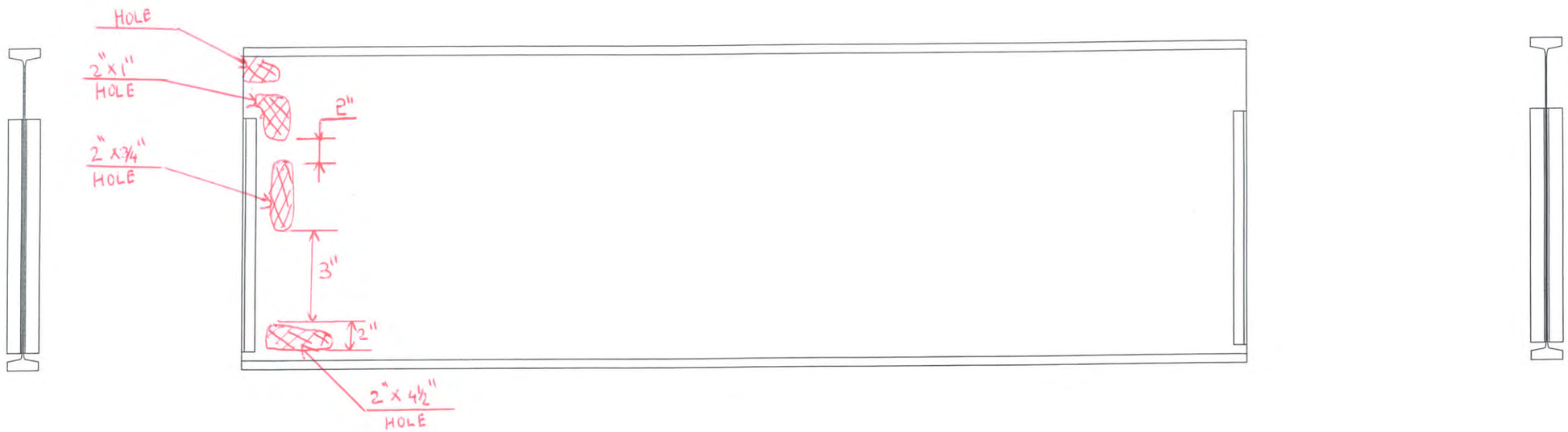

EAST ELEVATION
(LOOKING WEST)

WEST ELEVATION
(LOOKING EAST)

Hoyle, Tanner Associates, Inc.
Consulting Engineers

150 Dow Street.
Manchester, NH 03101-1227
Tel 603-669-5555, Fax 603-669-4168
Web Page: www.hoyletanner.com
© Copyright 2009

SARAH LONG BRIDGE

SPAN 10 SI CURB STRINGER BAY 3

INSPECTED BY: JB & EGW	DATE: 6-3-2009	SCALE: ⅜" = 1'-0" H ¾" = 1'-0" V

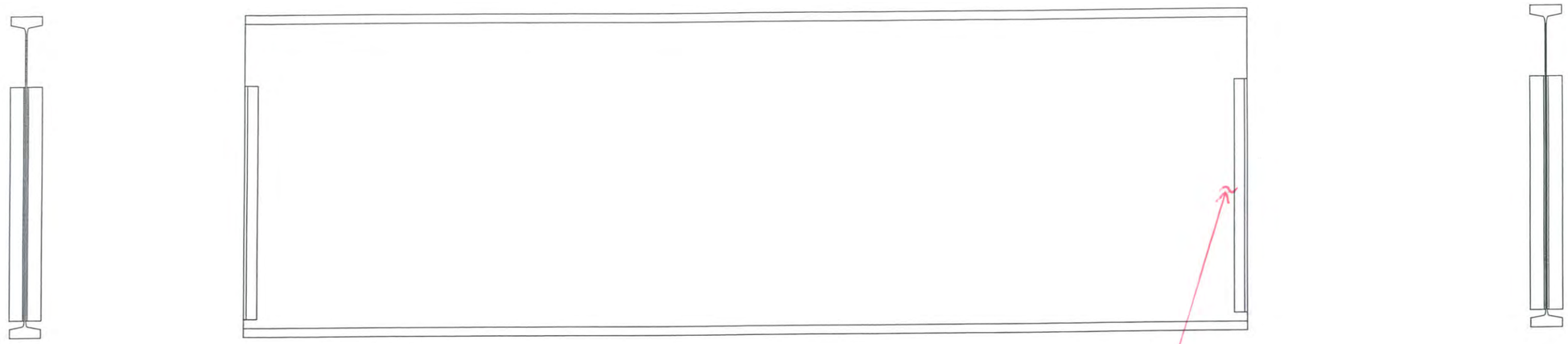

EAST ELEVATION
(LOOKING WEST)

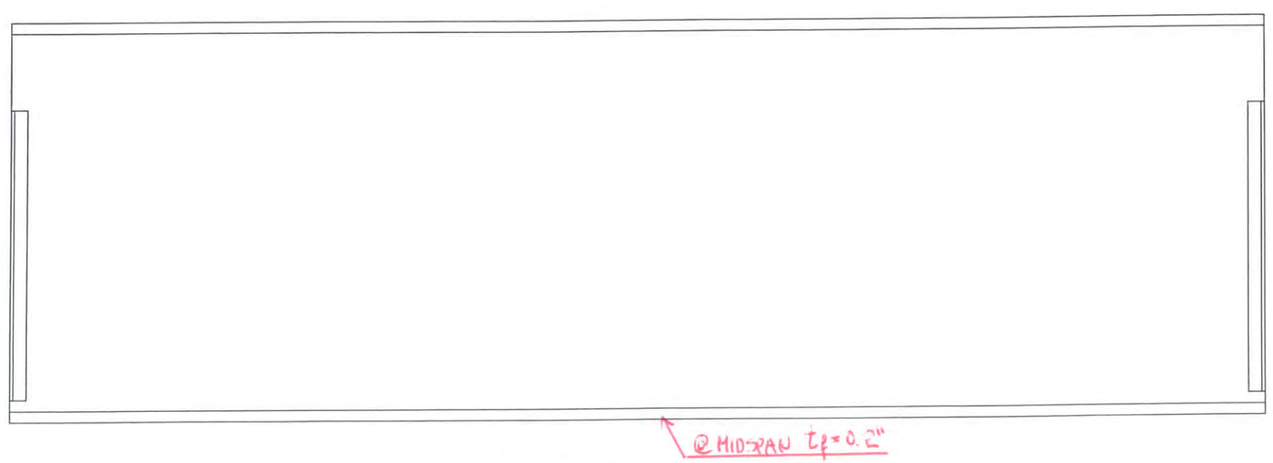

WEST ELEVATION
(LOOKING EAST)

Hoyle, Tanner Associates, Inc.
Consulting Engineers
150 Dow Street.
Manchester, NH 03101-1227
Tel 603-669-5555, Fax 603-669-4168
Web Page: www.hoyletanner.com
© Copyright 2009

SARAH LONG BRIDGE

SPAN 11 S4 CURB STRINGER BAY 3

INSPECTED BY: JB	DATE: 6-1-2004	SCALE: 3/8" = 1'-0" H
& EGW		3/4" = 1'-0" V

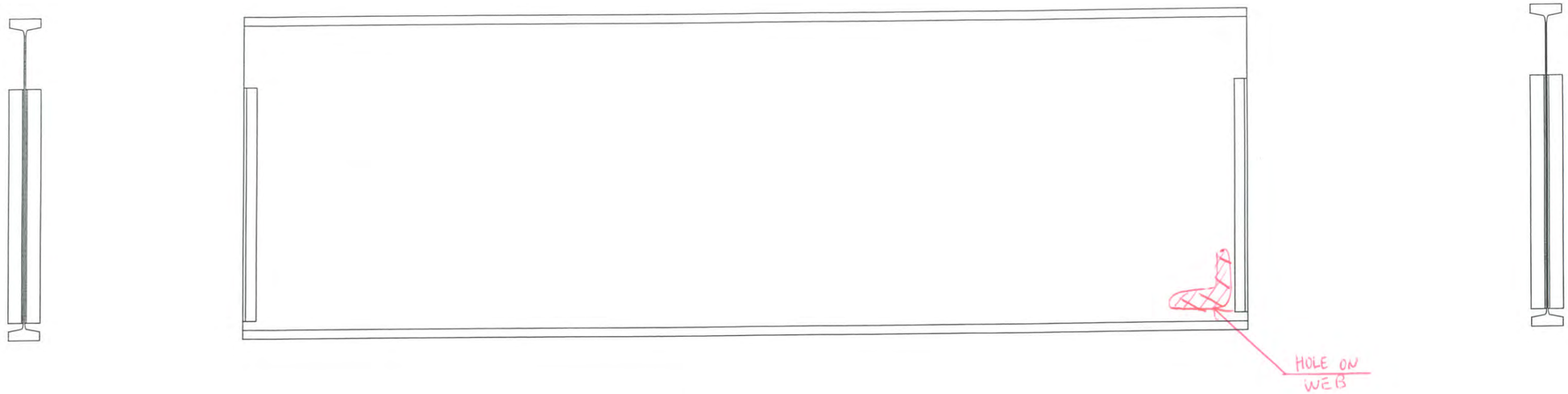

EAST ELEVATION
(LOOKING WEST)

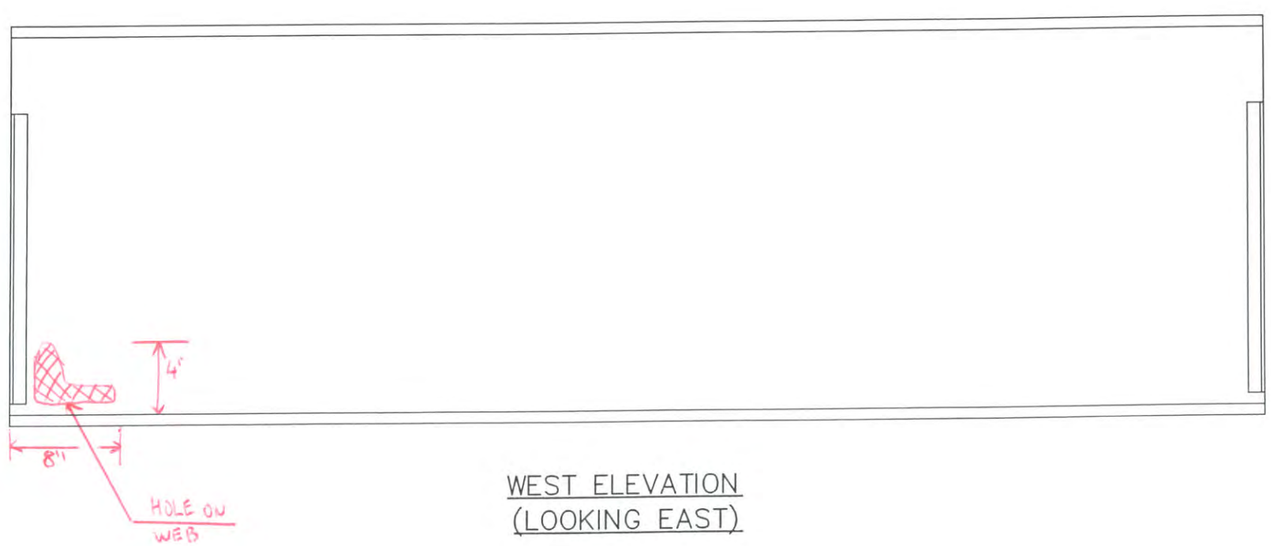

WEST ELEVATION
(LOOKING EAST)

Hoyle, Tanner Associates, Inc.
Consulting Engineers
150 Dow Street.
Manchester, NH 03101-1227
Tel 603-669-5555, Fax 603-669-4168
Web Page: www.hoyletanner.com
© Copyright 2009

SARAH LONG BRIDGE
SPAN 12 S4 CURB STRINGER BAY 3

INSPECTED BY: JB	DATE: 6-1-2004	SCALE: 3/8" = 1'-0" H
J E GW		3/4" = 1'-0" V

EAST ELEVATION
(LOOKING WEST)

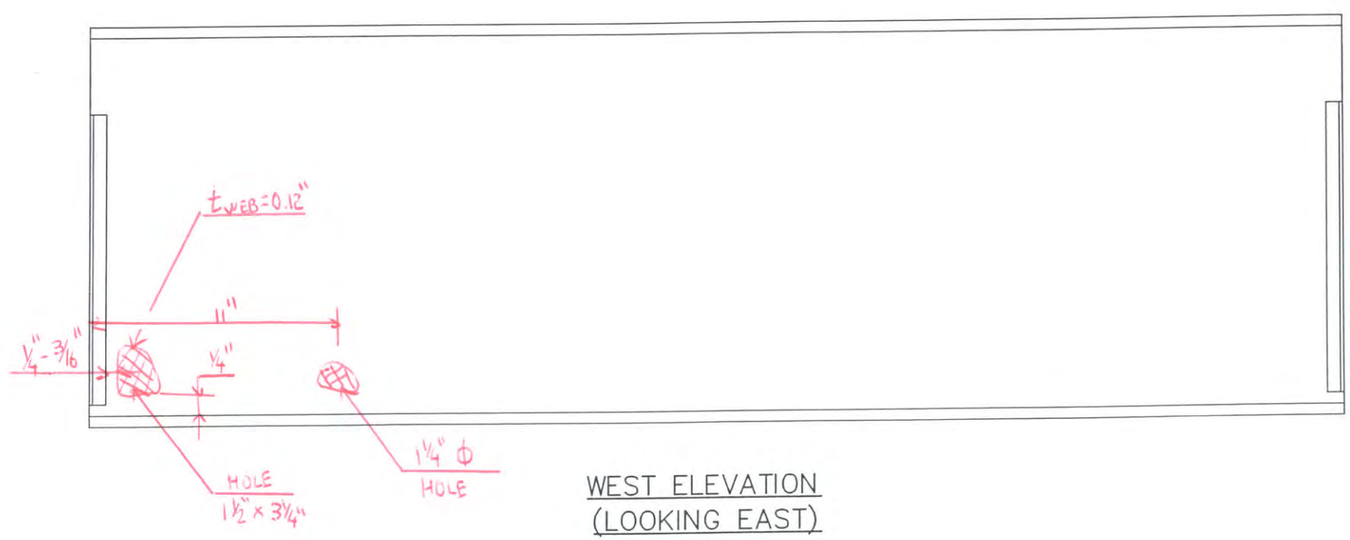

WEST ELEVATION
(LOOKING EAST)

Hoyle, Tanner Associates, Inc.
Consulting Engineers
150 Dow Street.
Manchester, NH 03101-1227
Tel 603-669-5555, Fax 603-669-4168
Web Page: www.hoyletanner.com
© Copyright 2009

SARAH LONG BRIDGE
SPAN 12 S1 CURB STRINGER BAY 3

INSPECTED BY: JB	DATE: 6-3-2009	SCALE: ⅜" = 1'-0" H
# EGW		¾" = 1'-0" V

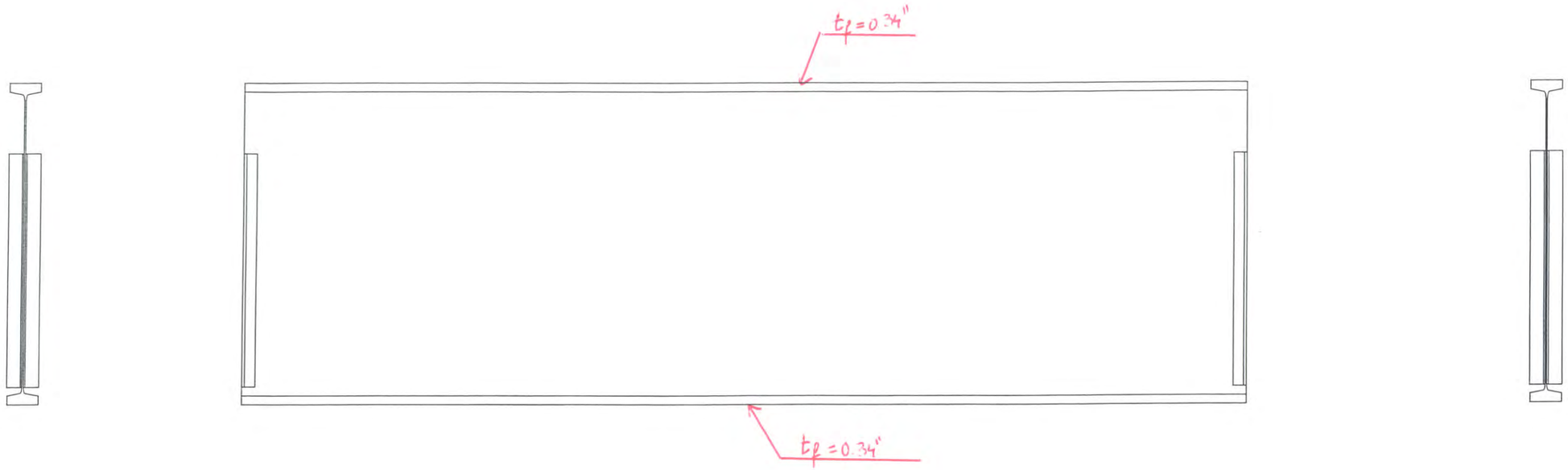

EAST ELEVATION
(LOOKING WEST)

WEST ELEVATION
(LOOKING EAST)

Hoyle, Tanner Associates, Inc.
Consulting Engineers

150 Dow Street.
Manchester, NH 03101–1227
Tel 603–669–5555, Fax 603–669–4168
Web Page: www.hoyletanner.com
© Copyright 2009

SARAH LONG BRIDGE

SPAN B S1 CURB STRINGER BAY 1

INSPECTED BY: JB	DATE: 6-3-2009	SCALE: 3/8" = 1'–0" H
EGW		3/4" = 1'–0" V

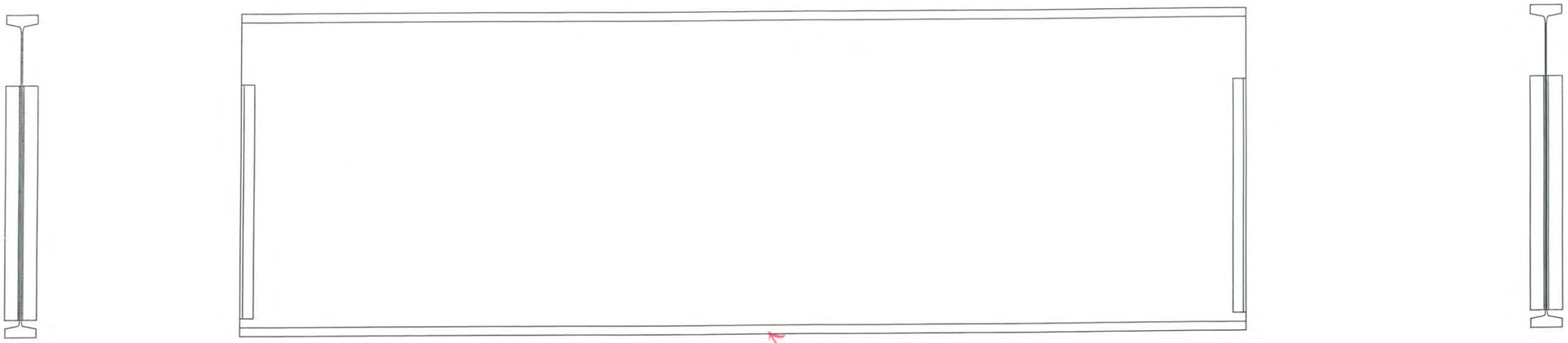

t_f = 0.38" @ EDGE OF CALIPER
t_f = 0.49" @ END OF CALIPER

EAST ELEVATION
(LOOKING WEST)

t_f = 1/4" - 5/16" ±
EXPOSED BELOW DECK
UNCERTAIN ON EMBEDED
THICKNESS IN CONCRETE

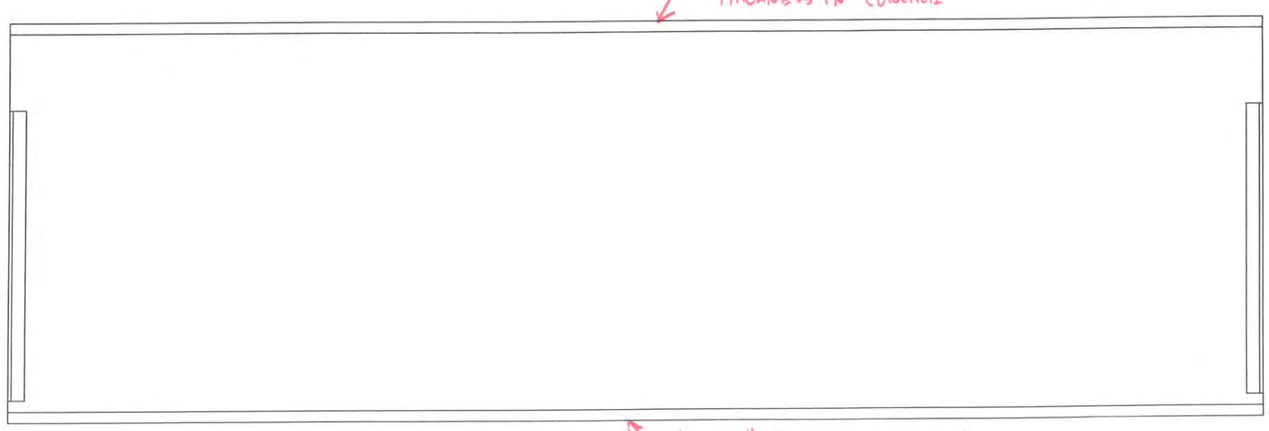

t = 0.20" @ EDGE OF CALIPER
t = 0.34" @ END OF CALIPER

WEST ELEVATION
(LOOKING EAST)

Hoyle, Tanner Associates, Inc.
Consulting Engineers
150 Dow Street,
Manchester, NH 03101-1227
Tel 603-669-5555, Fax 603-669-4168
Web Page: www.hoyletanner.com
© Copyright 2009

SARAH LONG BRIDGE
SPAN 13 S4 CURB STRINGER BAY 1

INSPECTED BY: JB	DATE: 6-1-2009	SCALE: 3/8" = 1'-0" H
& EGW		3/4" = 1'-0" V

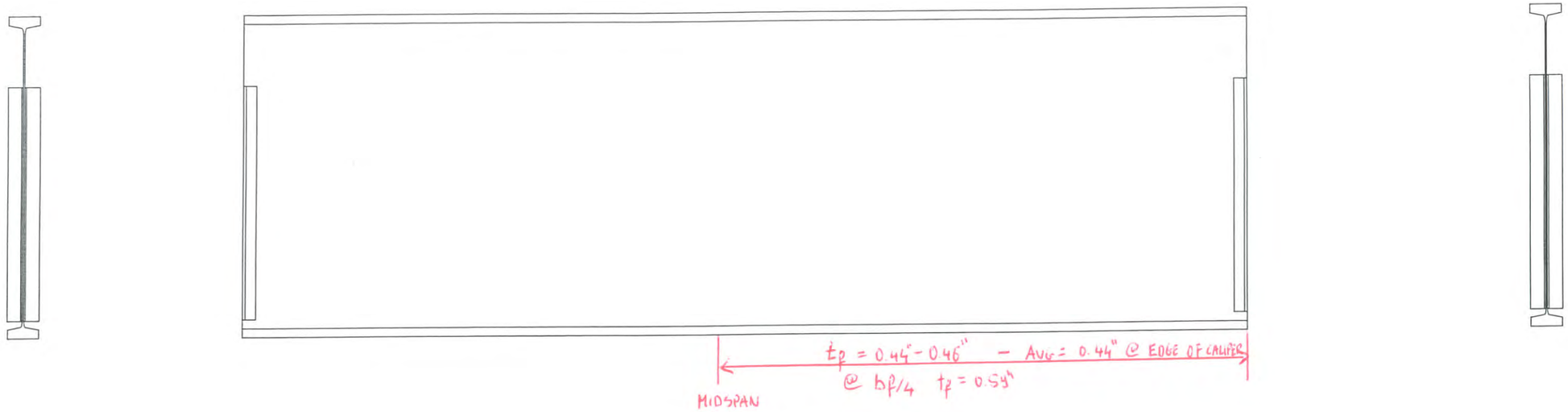

EAST ELEVATION
(LOOKING WEST)

WEST ELEVATION
(LOOKING EAST)

Hoyle, Tanner Associates, Inc.
Consulting Engineers

150 Dow Street.
Manchester, NH 03101-1227
Tel 603-669-5555, Fax 603-669-4168
Web Page: www.hoyletanner.com
© Copyright 2009

SARAH LONG BRIDGE

SPAN 1 & 4 CURB STRINGER BAY 2

INSPECTED BY: JB & EGW	DATE: 5-28-2009	SCALE: ⅜" = 1'-0" H ¾" = 1'-0" V

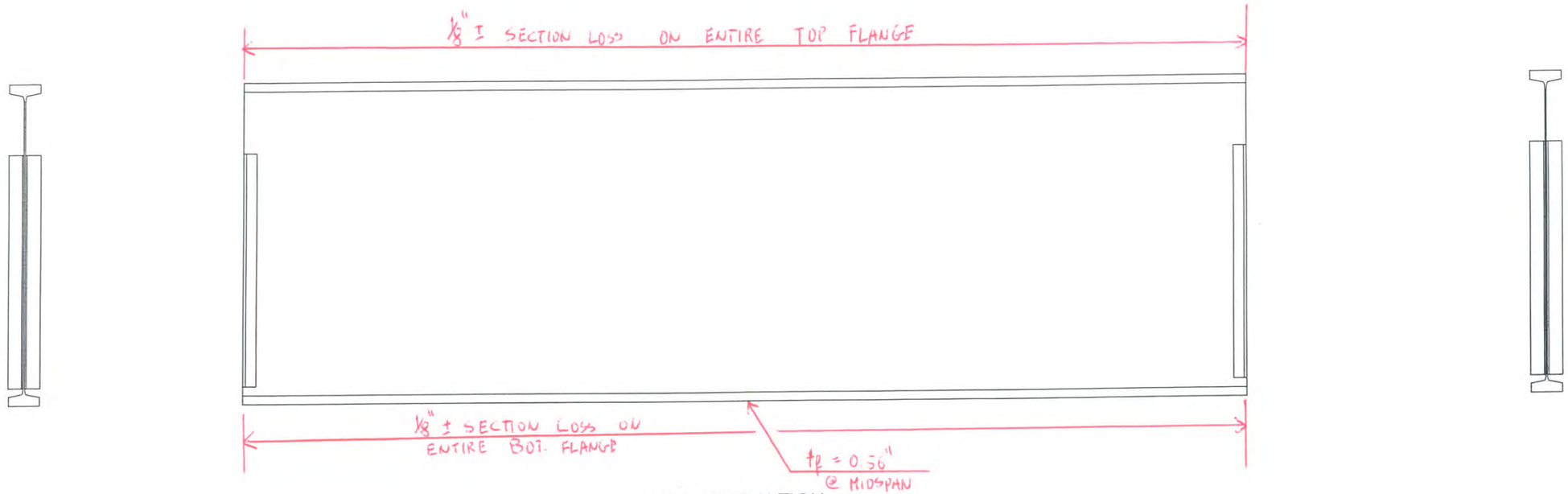

EAST ELEVATION
(LOOKING WEST)

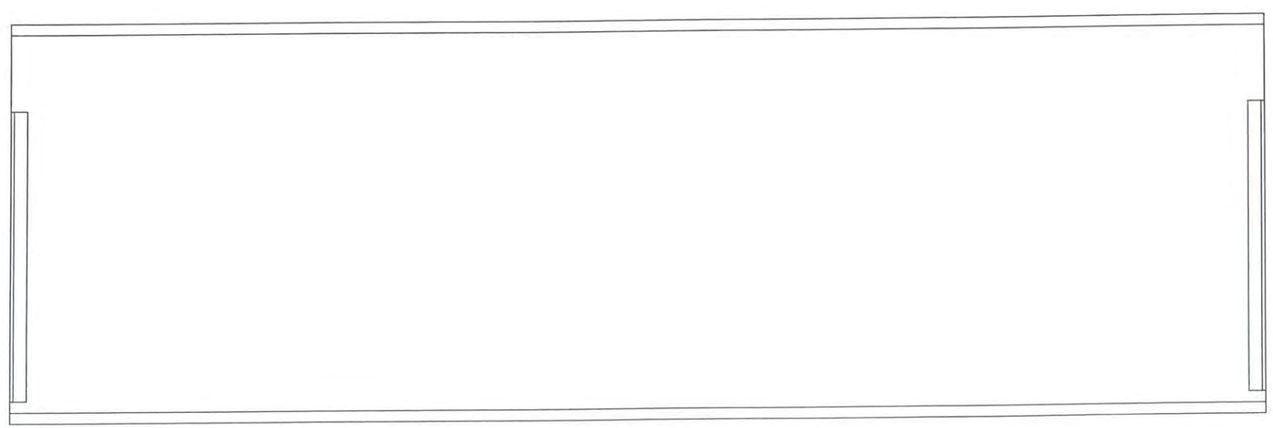

WEST ELEVATION
(LOOKING EAST)

Hoyle, Tanner Associates, Inc.
Consulting Engineers

150 Dow Street,
Manchester, NH 03101-1227
Tel 603-669-5555, Fax 603-669-4168
Web Page: www.hoyletanner.com
© Copyright 2009

SARAH LONG BRIDGE

SPAN 14 S4 CURB STRINGER BAY 3

INSPECTED BY: JB & EGW	DATE: 5-28-2009	SCALE: 3/8" = 1'-0" H 3/4" = 1'-0" V

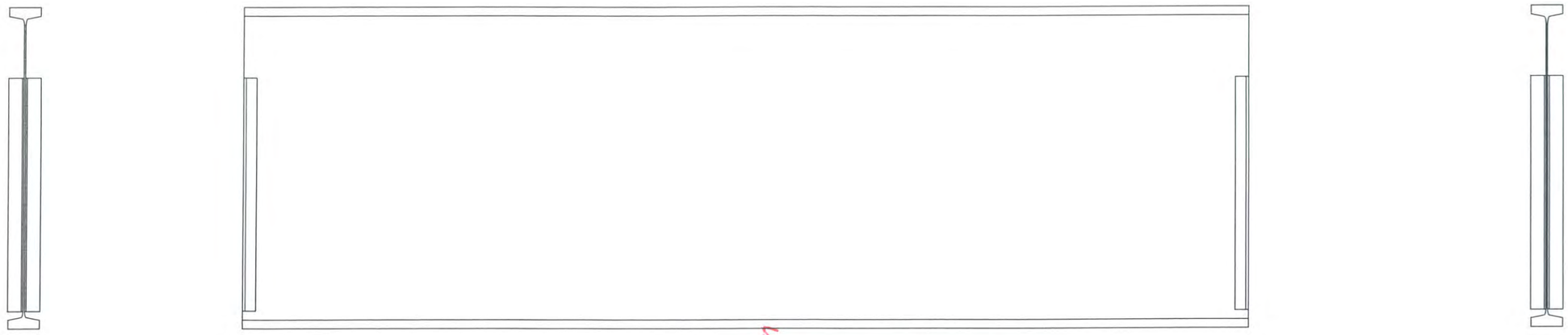

$t_f = 0.27''$ @ EDGE OF CALIPER
$t_f = 0.34''$ @ END OF CALIPER
@ MIDSPAN

EAST ELEVATION
(LOOKING WEST)

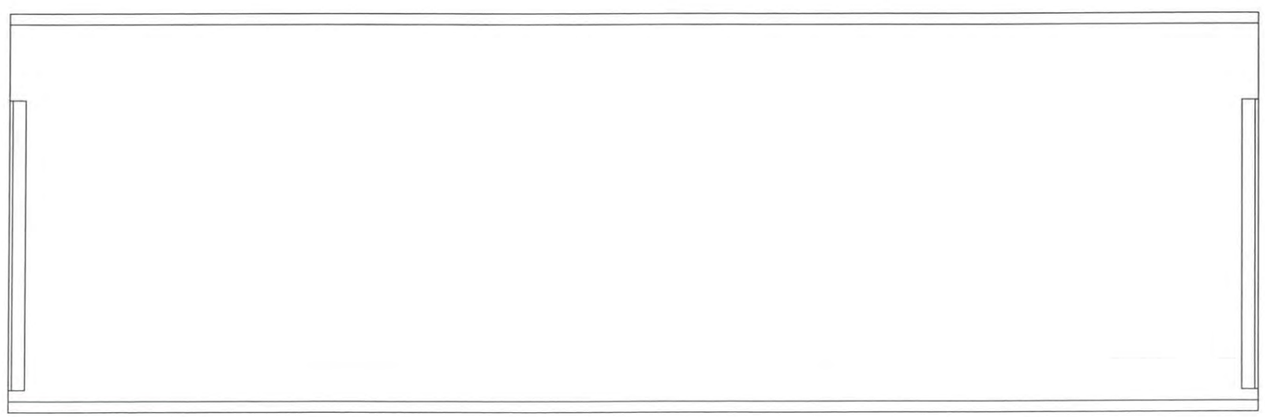

WEST ELEVATION
(LOOKING EAST)

Hoyle, Tanner Associates, Inc.
Consulting Engineers

150 Dow Street.
Manchester, NH 03101–1227
Tel 603–669–5555, Fax 603–669–4168
Web Page: www.hoyletanner.com
© Copyright 2009

SARAH LONG BRIDGE

SPAN 15 S1 CURB STRINGER BAY 1

INSPECTED BY: JB & EGW	DATE: 6-3-2009	SCALE: ⅜" = 1'–0" H ¾" = 1'–0" V

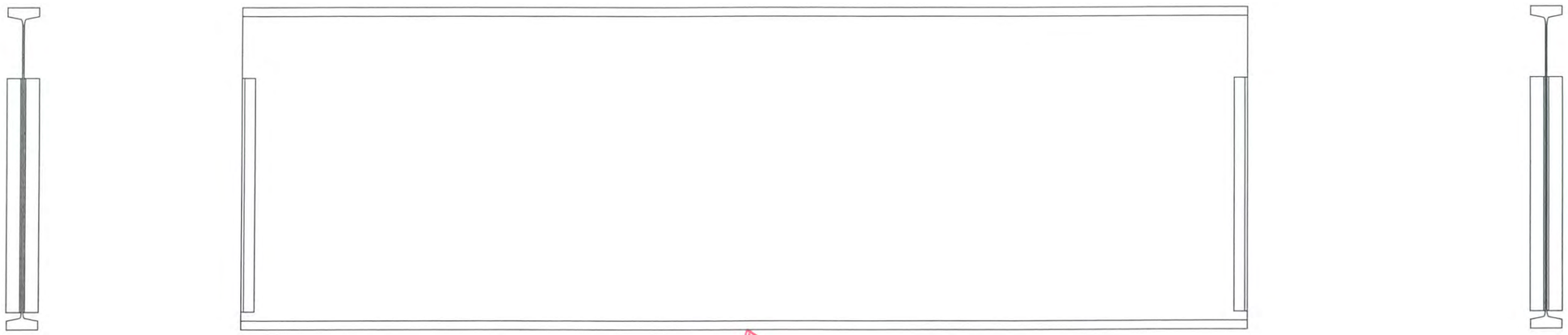

t_f = 0.38" @ EDGE OF CALIPER
t_f = 0.52" @ END OF CALIPER
REPRESENTATIVE OF ENTIRE LENGTH

EAST ELEVATION
(LOOKING WEST)

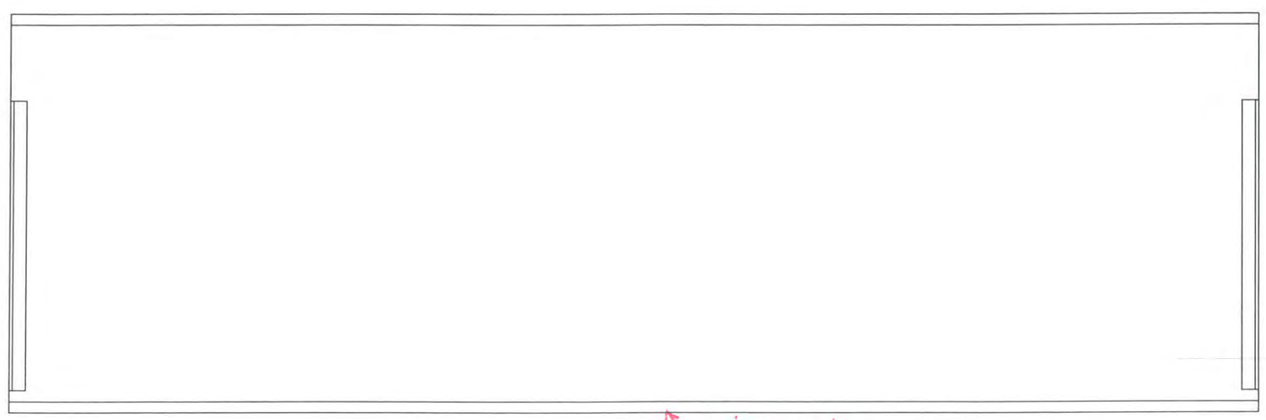

t_f = 0.45" @ EDGE OF CALIPER
t_f = 0.52" @ END OF CALIPER

WEST ELEVATION
(LOOKING EAST)

Hoyle, Tanner Associates, Inc.
Consulting Engineers

150 Dow Street.
Manchester, NH 03101-1227
Tel 603-669-5555, Fax 603-669-4168
Web Page: www.hoyletanner.com
© Copyright 2009

SARAH LONG BRIDGE
SPAN 15 S4 CURB STRINGER BAY 1

INSPECTED BY: JB	DATE: 6-1-2009	SCALE: ⅜" = 1'-0" H
& EGW		¾" = 1'-0" V

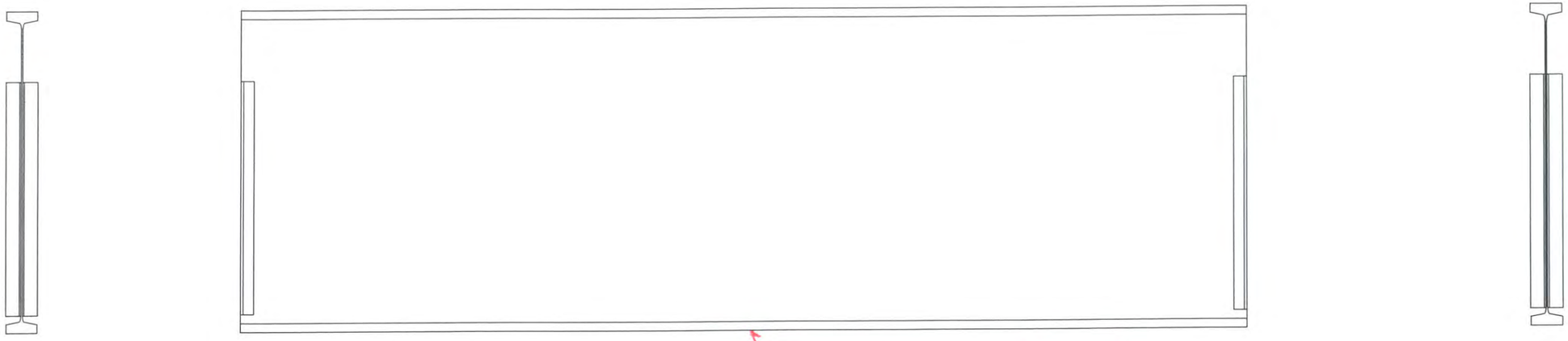

t_f BOTTOM FLANGE = 0.45" to 0.423"
ON AVERAGE = 0.43" ±
@ MIDSPAN

EAST ELEVATION
(LOOKING WEST)

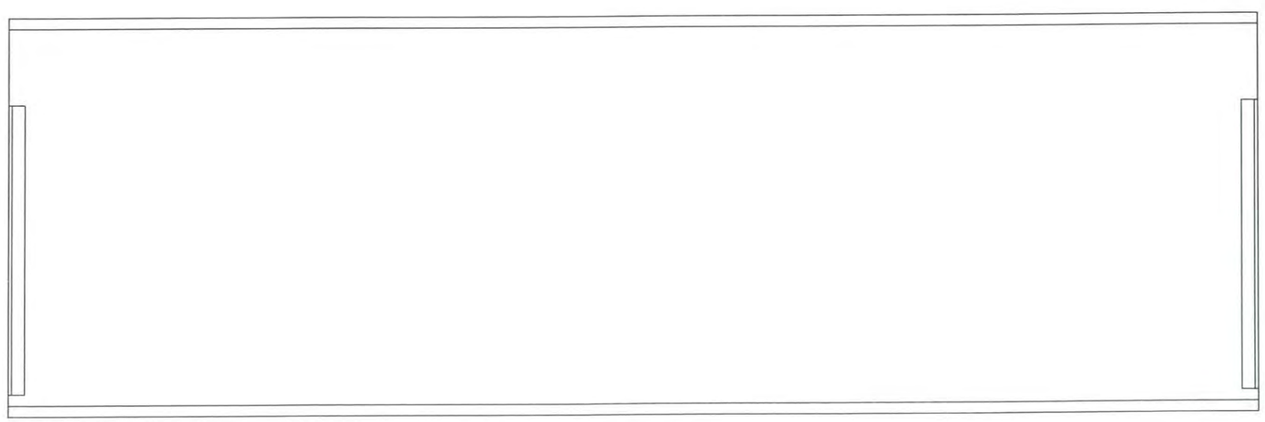

WEST ELEVATION
(LOOKING EAST)

Hoyle, Tanner Associates, Inc.
Consulting Engineers

150 Dow Street,
Manchester, NH 03101-1227
Tel 603-669-5555, Fax 603-669-4168
Web Page: www.hoyletanner.com
© Copyright 2009

SARAH LONG BRIDGE
SPAN 15 S4 CURB STRINGER BAY 3

INSPECTED BY: JB & EGW	DATE: 5-28-09	SCALE: 3/8" = 1'-0" H 3/4" = 1'-0" V

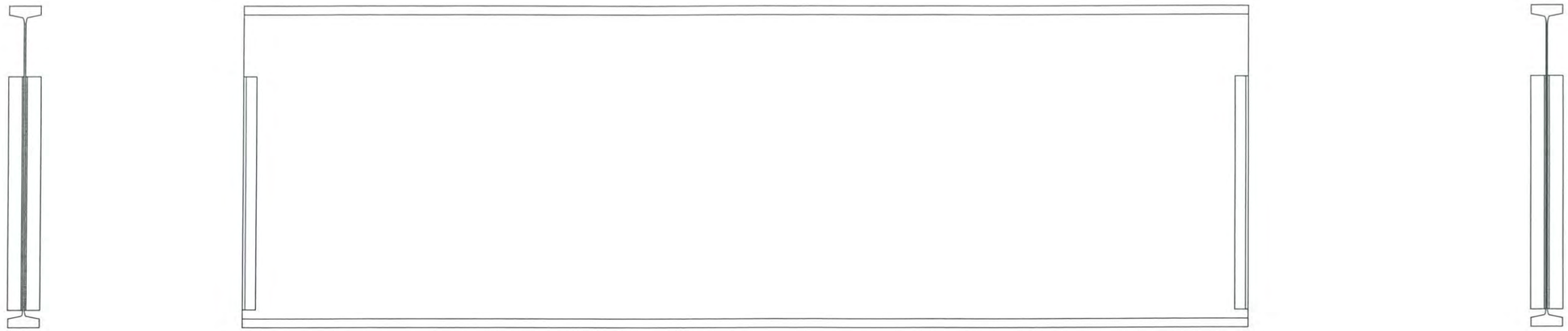

EAST ELEVATION
(LOOKING WEST)

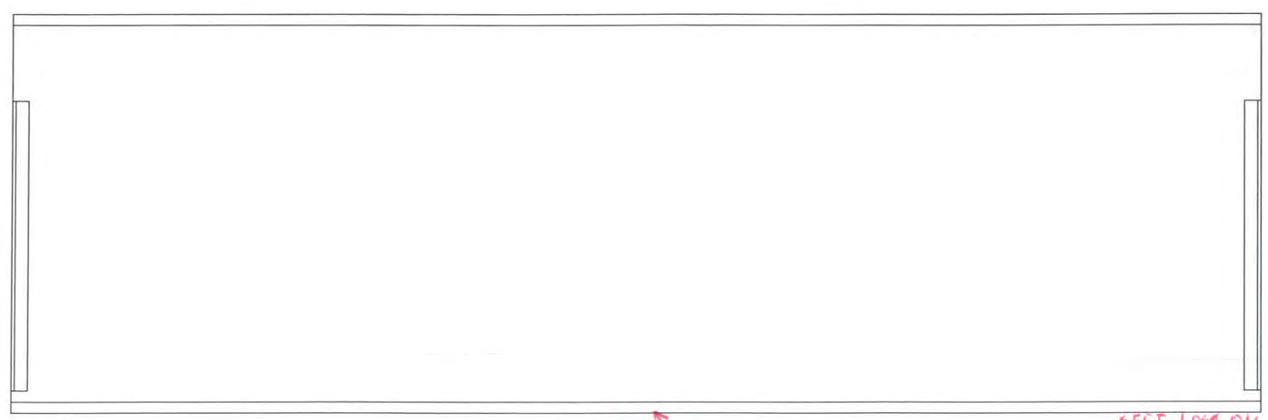

t_f = 0.27" @ EDGE OF CALIPER
t_f = 0.35" @ END OF CALIPER
} ≈ SECT. LOSS ON HALF OF THICKNESS

WEST ELEVATION
(LOOKING EAST)

Hoyle, Tanner Associates, Inc.
Consulting Engineers
150 Dow Street.
Manchester, NH 03101-1227
Tel 603-669-5555, Fax 603-669-4168
Web Page: www.hoyletanner.com

© Copyright 2009

SARAH LONG BRIDGE
SPAN 21 S1 CURB STRINGER BAY 4

INSPECTED BY: JB & EGW	DATE: 6-4-03	SCALE: ⅜" = 1'-0" H ¾" = 1'-0" V

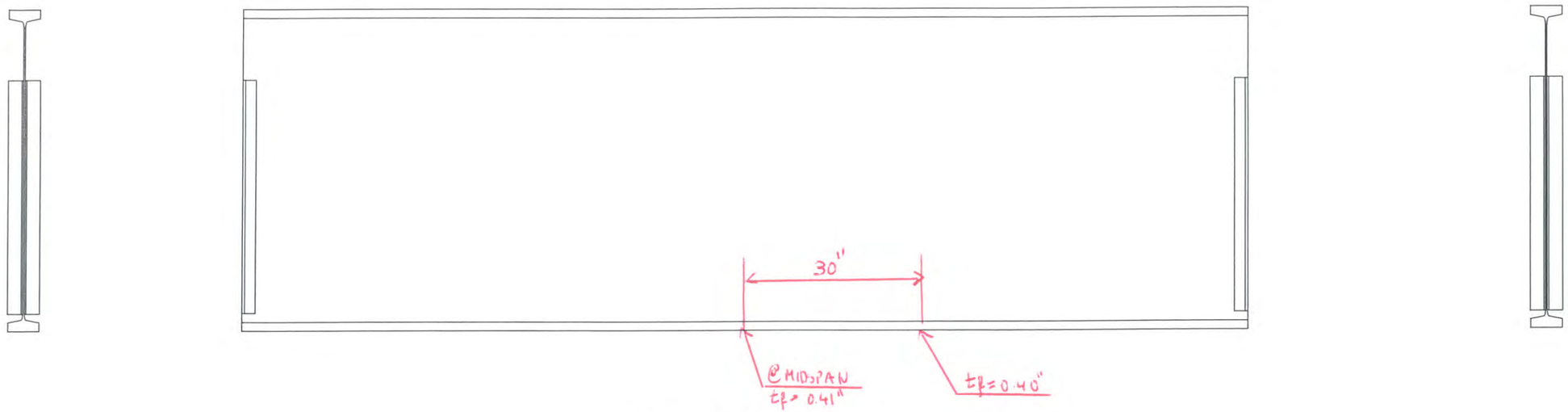

EAST ELEVATION
(LOOKING WEST)

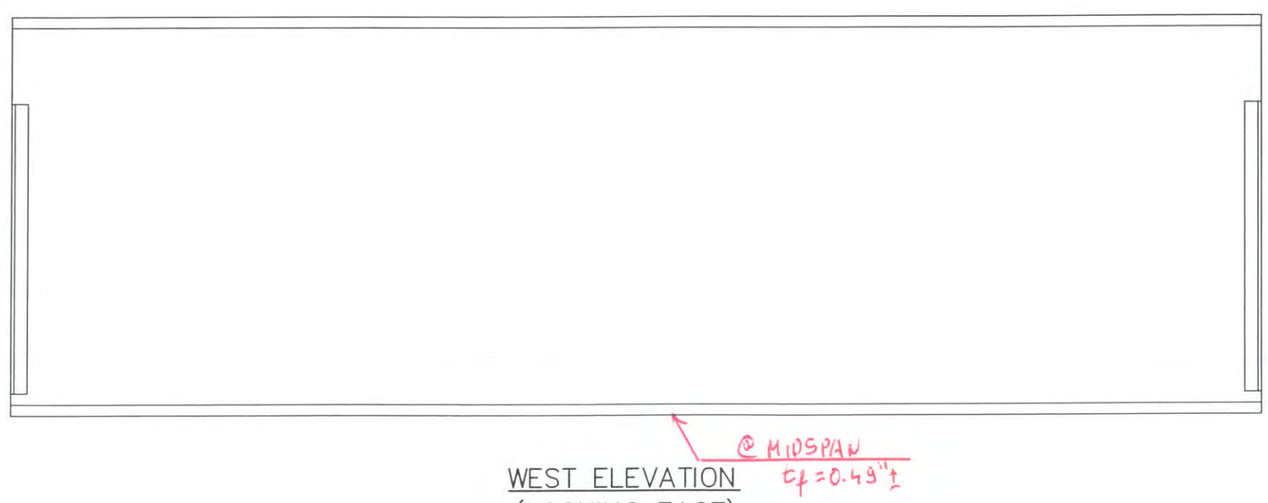

WEST ELEVATION
(LOOKING EAST)

Hoyle, Tanner Associates, Inc.
Consulting Engineers

150 Dow Street.
Manchester, NH 03101-1227
Tel 603-669-5555, Fax 603-669-4168
Web Page: www.hoyletanner.com
© Copyright 2009

SARAH LONG BRIDGE

SPAN 23 S4 CURB STRINGER BAY C

INSPECTED BY: JB	DATE: 6-4-2009	SCALE: ⅜" = 1'-0" H
@ EGW		¾" = 1'-0" V

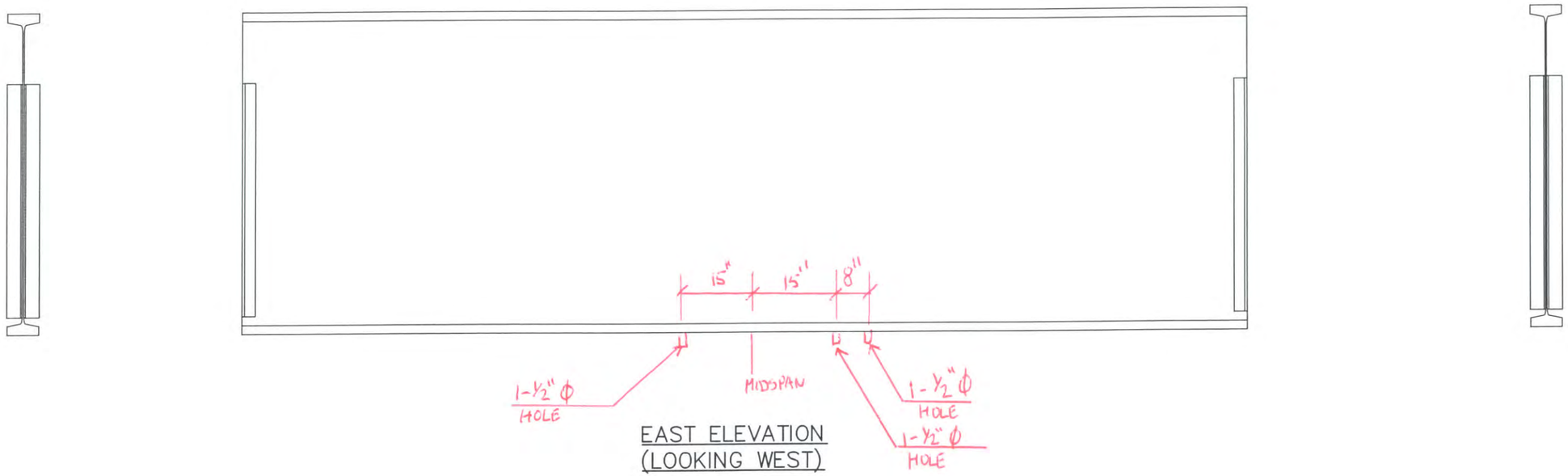

EAST ELEVATION
(LOOKING WEST)

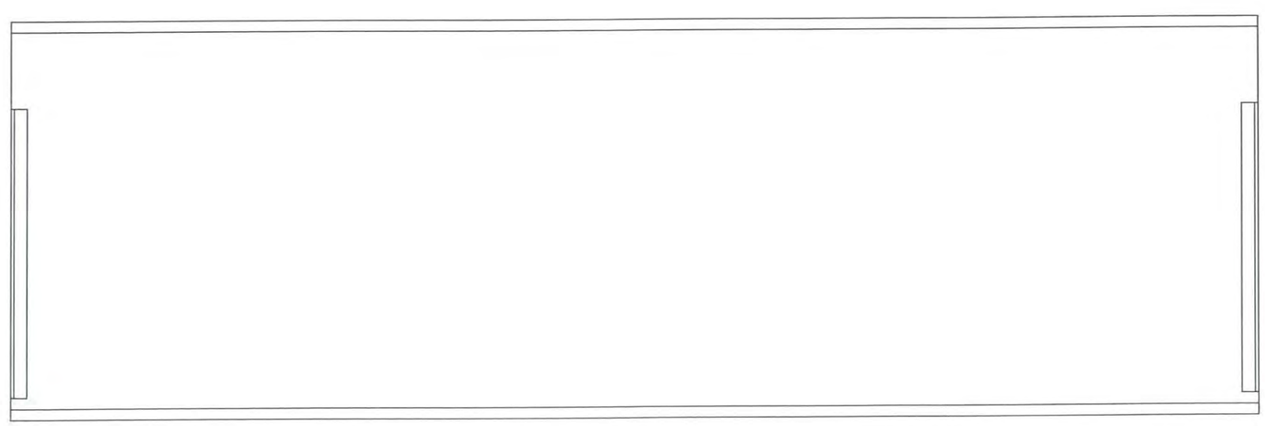

WEST ELEVATION
(LOOKING EAST)

Hoyle, Tanner Associates, Inc.
Consulting Engineers
150 Dow Street.
Manchester, NH 03101-1227
Tel 603-669-5555, Fax 603-669-4168
Web Page: www.hoyletanner.com
© Copyright 2009

SARAH LONG BRIDGE
SPAN 24 S2 ROADWAY STRINGER BAY 2

INSPECTED BY: JB & EGW	DATE:	SCALE: ⅜" = 1'-0" H ¼" = 1'-0" V

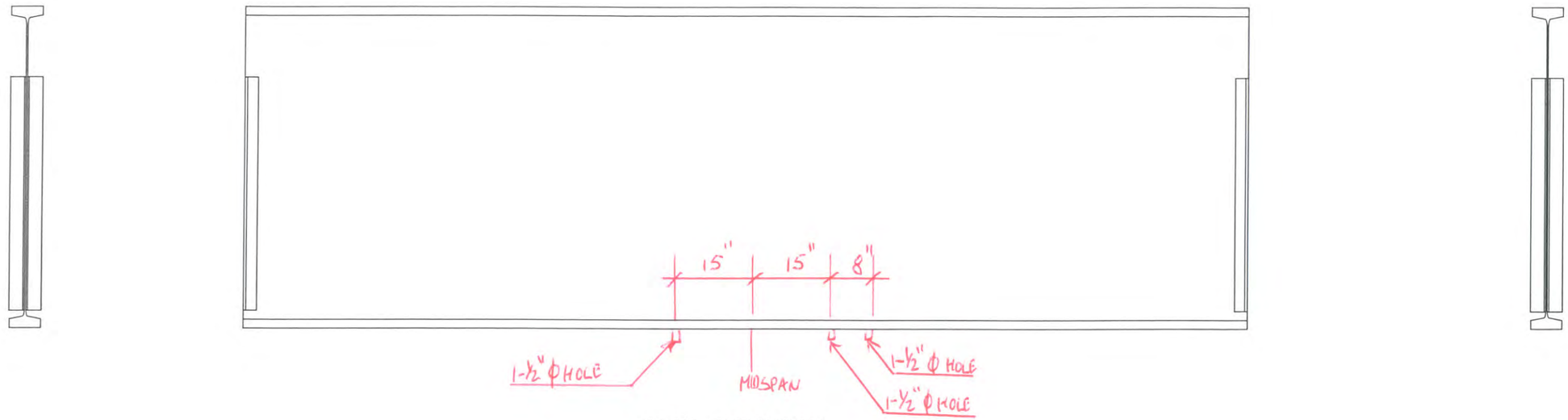

EAST ELEVATION
(LOOKING WEST)

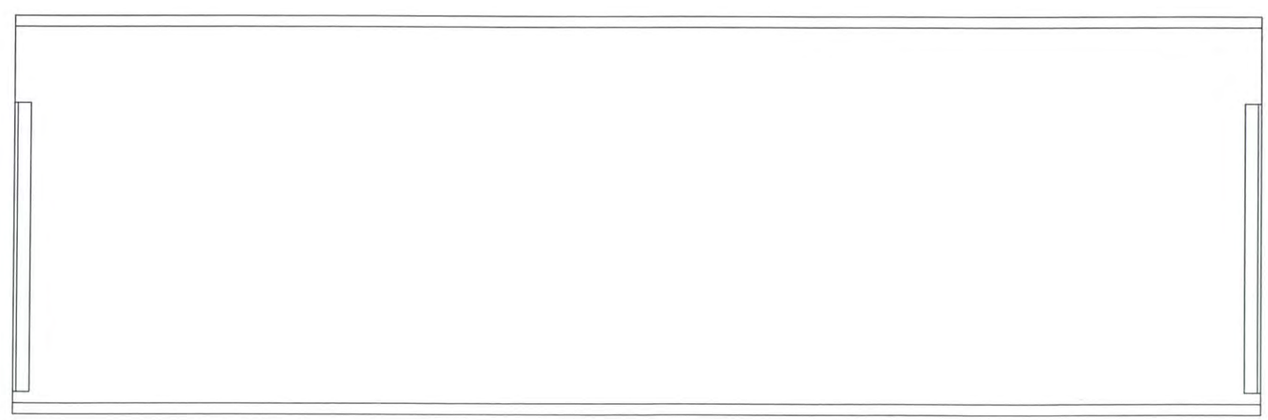

WEST ELEVATION
(LOOKING EAST)

Hoyle, Tanner Associates, Inc.
Consulting Engineers
150 Dow Street.
Manchester, NH 03101-1227
Tel 603-669-5555, Fax 603-669-4168
Web Page: www.hoyletanner.com
© Copyright 2009

SARAH LONG BRIDGE
SPAN 245.3 ROADWAY STRINGER BAT2

INSPECTED BY: JB	DATE:	SCALE: ⅛" = 1'-0" H
EGW		¼" = 1'-0" V

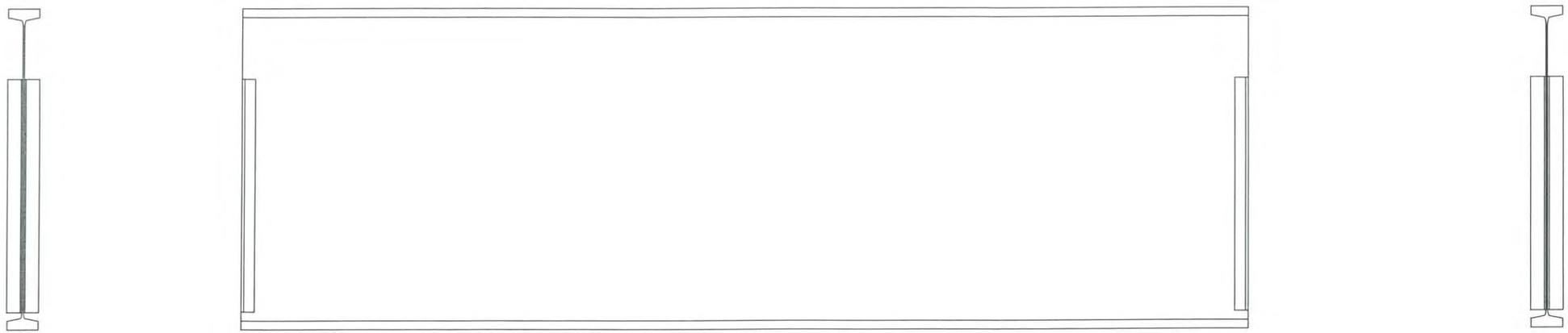

EAST ELEVATION
(LOOKING WEST)

$t_f = 0.21"$ @ MIDSPAN

WEST ELEVATION
(LOOKING EAST)

Hoyle, Tanner Associates, Inc.
Consulting Engineers
150 Dow Street.
Manchester, NH 03101-1227
Tel 603-669-5555, Fax 603-669-4168
Web Page: www.hoyletanner.com
© Copyright 2009

SARAH LONG BRIDGE
SPAN 27 S4 CURB STRINGER BAY 1

INSPECTED BY: JB	DATE: 6-2-09	SCALE: 3/8" = 1'-0" H
℄ EGW		3/4" = 1'-0" V

Section D:

Pier Bents 21-26 Condition

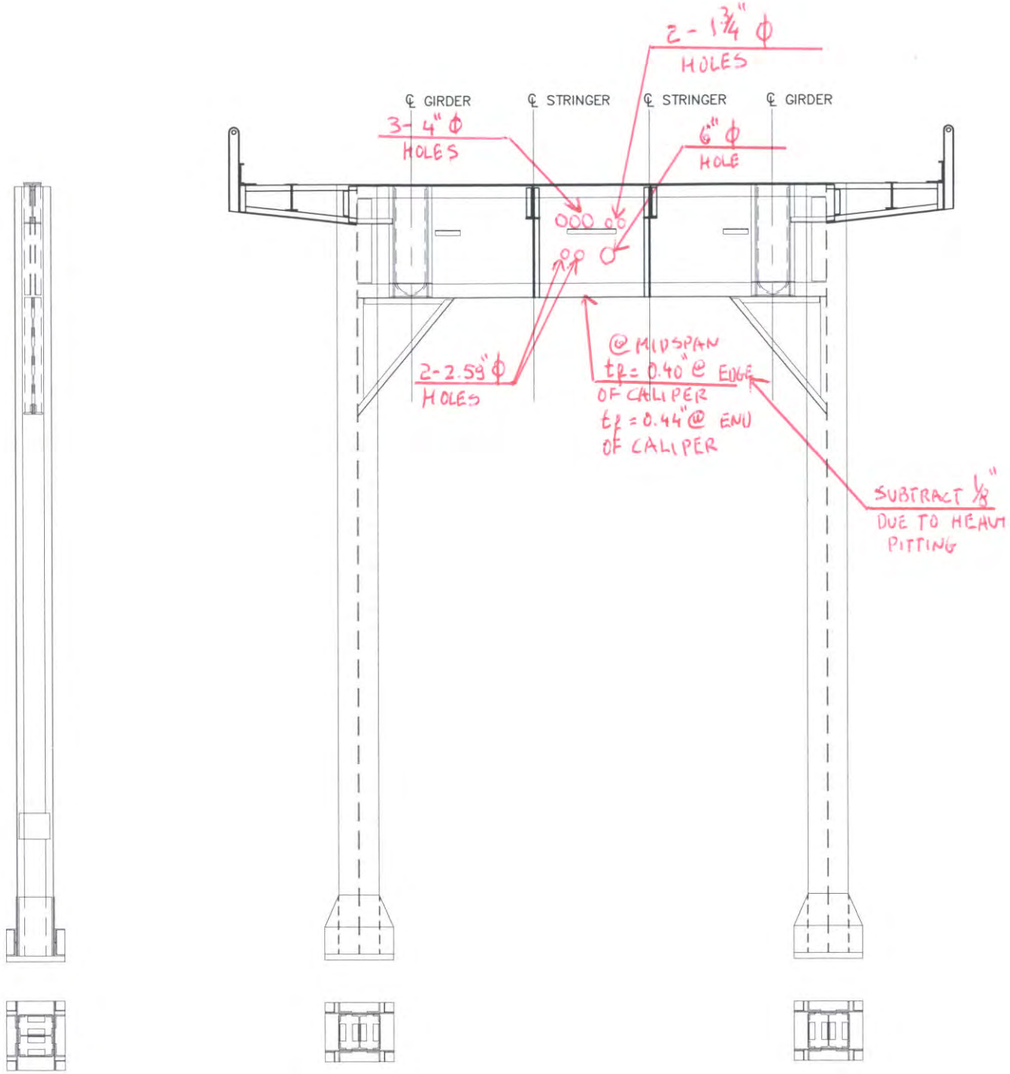

WEST ELEVATION
(LOOKING EAST)

SOUTH ELEVATION
(LOOKING NORTH)

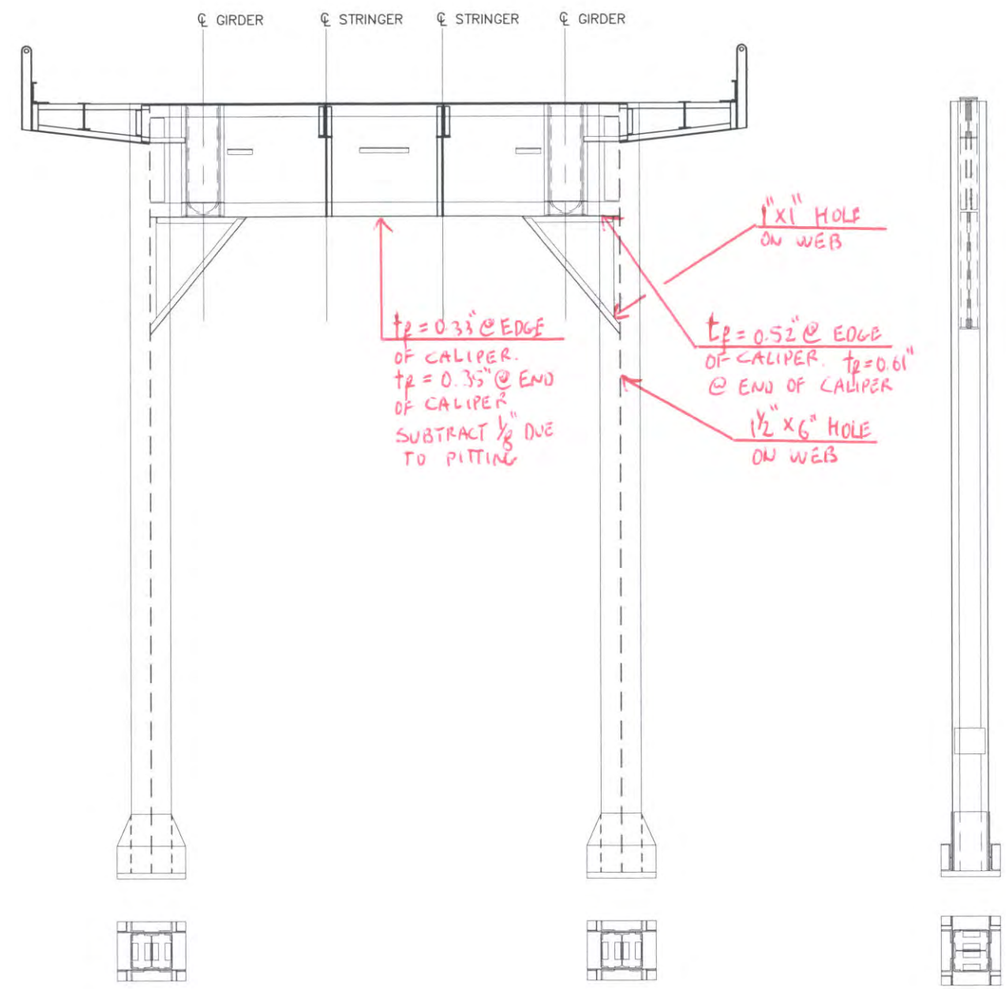

NORTH ELEVATION
(LOOKING SOUTH)

EAST ELEVATION
(LOOKING WEST)

Hoyle, Tanner Associates, Inc.
Consulting Engineers

150 Dow Street.
Manchester, NH 03101-1227
Tel 603-669-5555, Fax 603-669-4168
Web Page: www.hoyletanner.com
© Copyright 2009

SARAH LONG BRIDGE
PIER 21 BENT

INSPECTED BY: JB & EGW	DATE: 6-2-09 6-4-09	SCALE: NTS

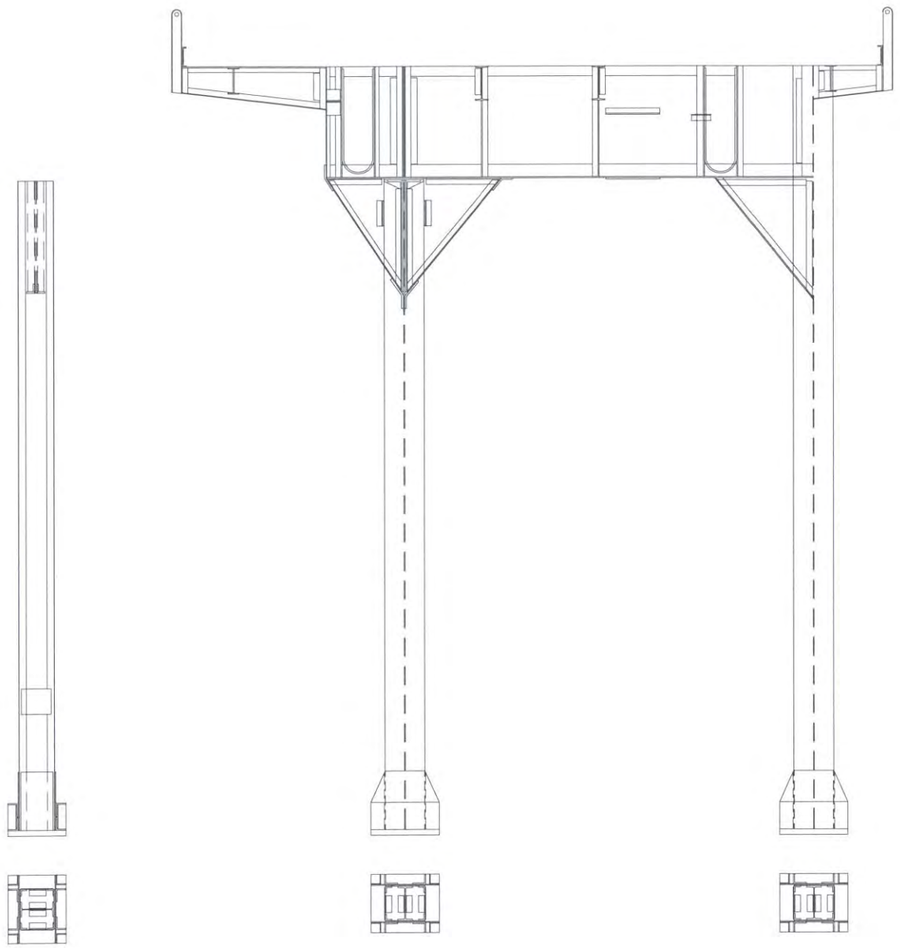

WEST ELEVATION
(LOOKING EAST)

SOUTH ELEVATION
(LOOKING NORTH)

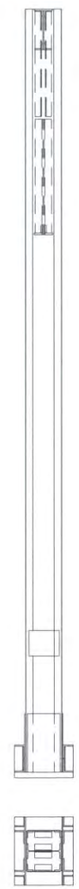

WEST ELEVATION
(LOOKING EAST)

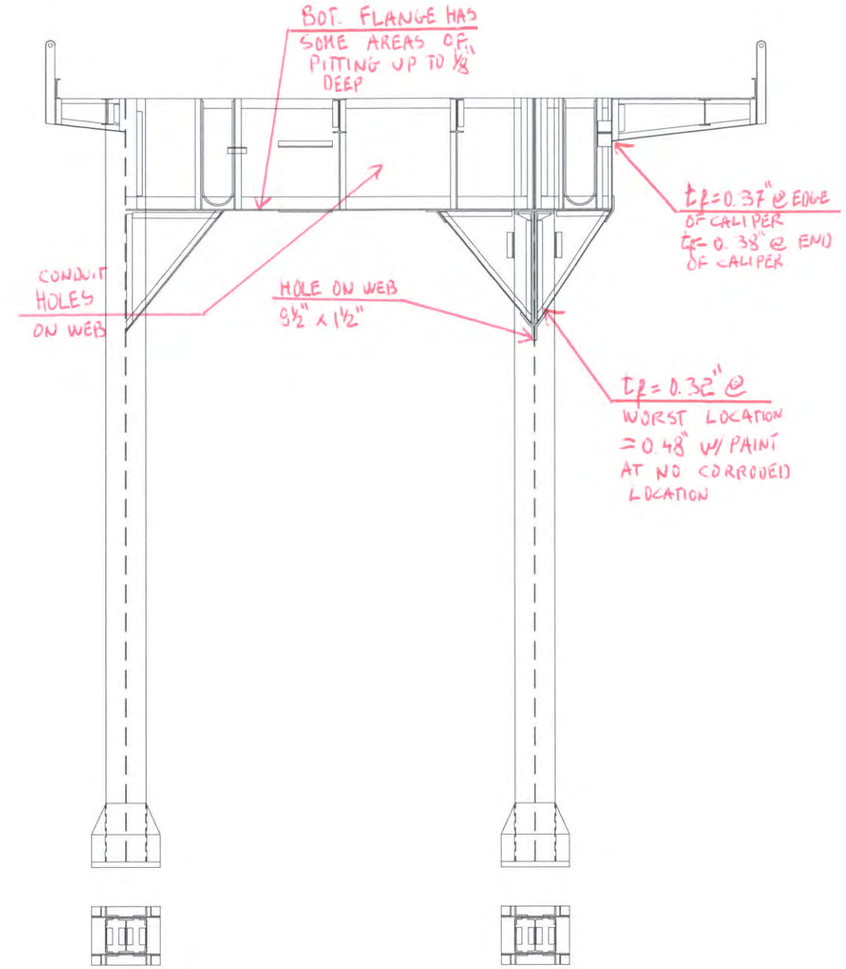

NORTH ELEVATION
(LOOKING SOUTH)

Hoyle, Tanner & Associates, Inc.
Consulting Engineers

150 Dow Street.
Manchester, NH 03101–1227
Tel 603–669–5555, Fax 603–669–4168
Web Page: www.hoyletanner.com
© Copyright 2009

SARAH LONG BRIDGE
PIER 22 BENT

INSPECTED BY: JB & EGW	DATE:	SCALE: NTS

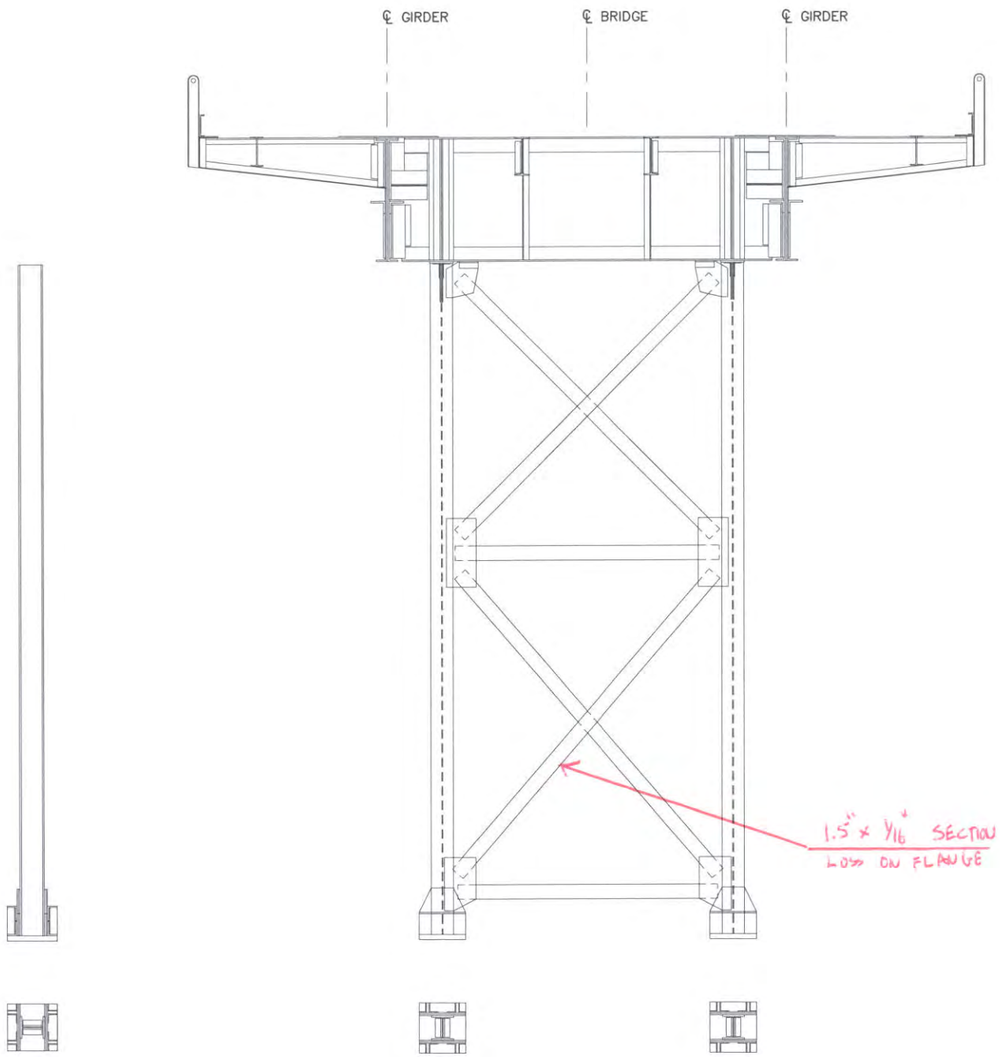

WEST ELEVATION
(LOOKING EAST)

SOUTH ELEVATION
(LOOKING NORTH)

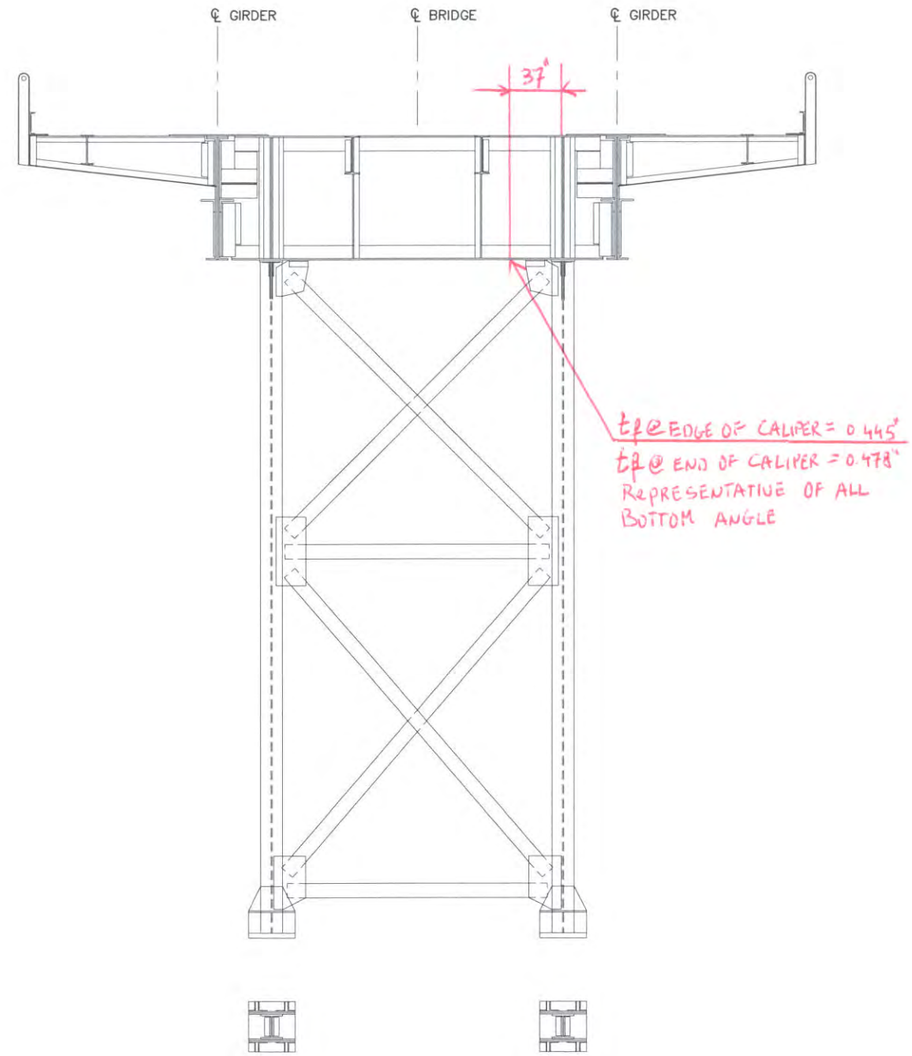

NORTH ELEVATION
(LOOKING SOUTH)

EAST ELEVATION
(LOOKING WEST)

Hoyle, Tanner Associates, Inc.
Consulting Engineers
150 Dow Street.
Manchester, NH 03101-1227
Tel 603-669-5555, Fax 603-669-4168
Web Page: www.hoyletanner.com
© Copyright 2009

SARAH LONG BRIDGE
PIER 23 BENT

INSPECTED BY:	DATE:	SCALE: NTS

WEST ELEVATION
(LOOKING EAST)

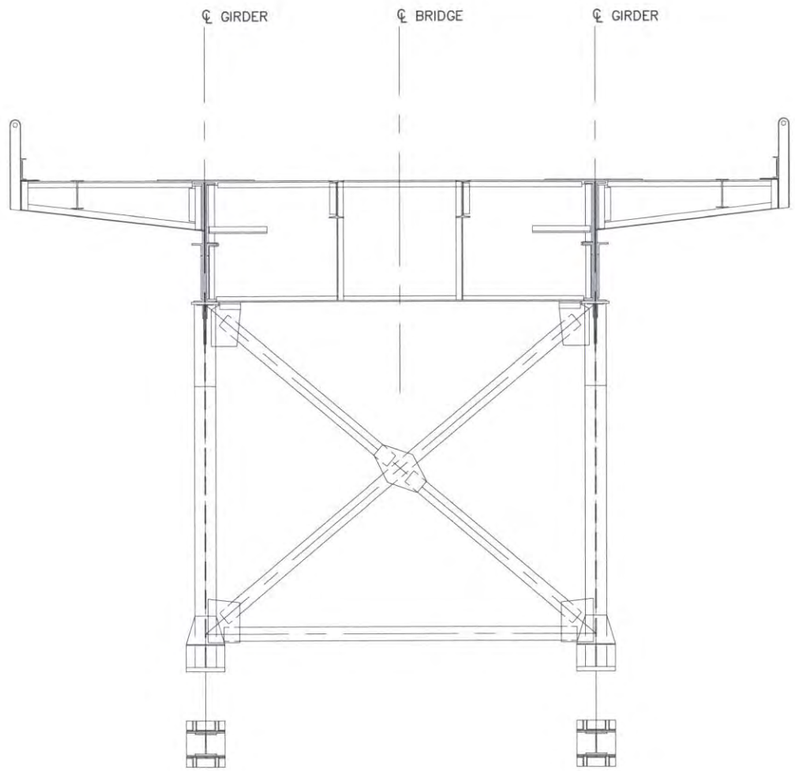

SOUTH ELEVATION
(LOOKING NORTH)

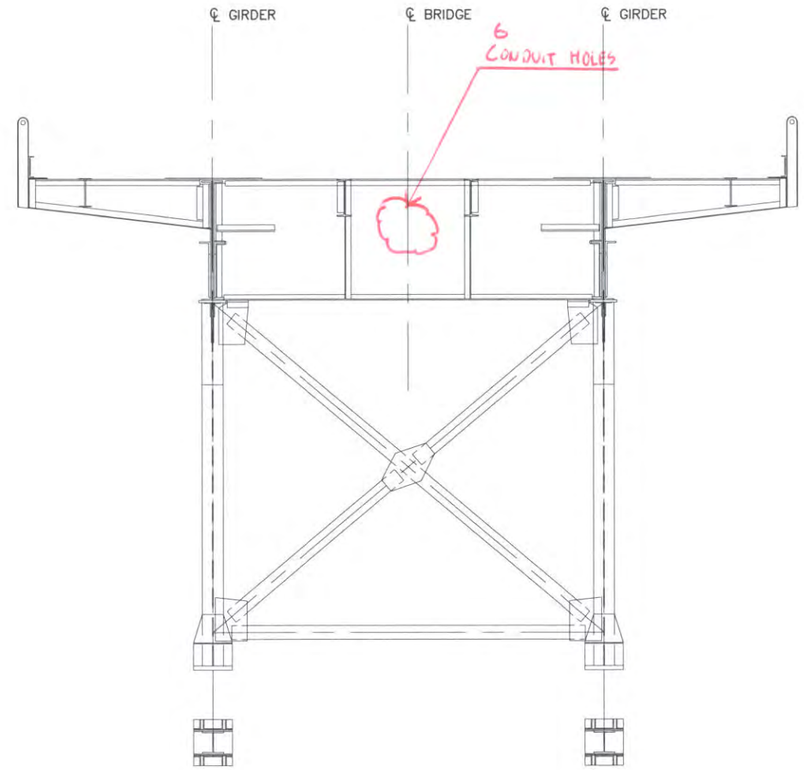

NORTH ELEVATION
(LOOKING SOUTH)

EAST ELEVATION
(LOOKING WEST)

Hoyle, Tanner & Associates, Inc.
Consulting Engineers
150 Dow Street.
Manchester, NH 03101-1227
Tel 603-669-5555, Fax 603-669-4168
Web Page: www.hoyletanner.com
© Copyright 2009

SARAH LONG BRIDGE
PIER 24 BENT

INSPECTED BY: JB & EGW	DATE: 6-6-2004	SCALE: NTS

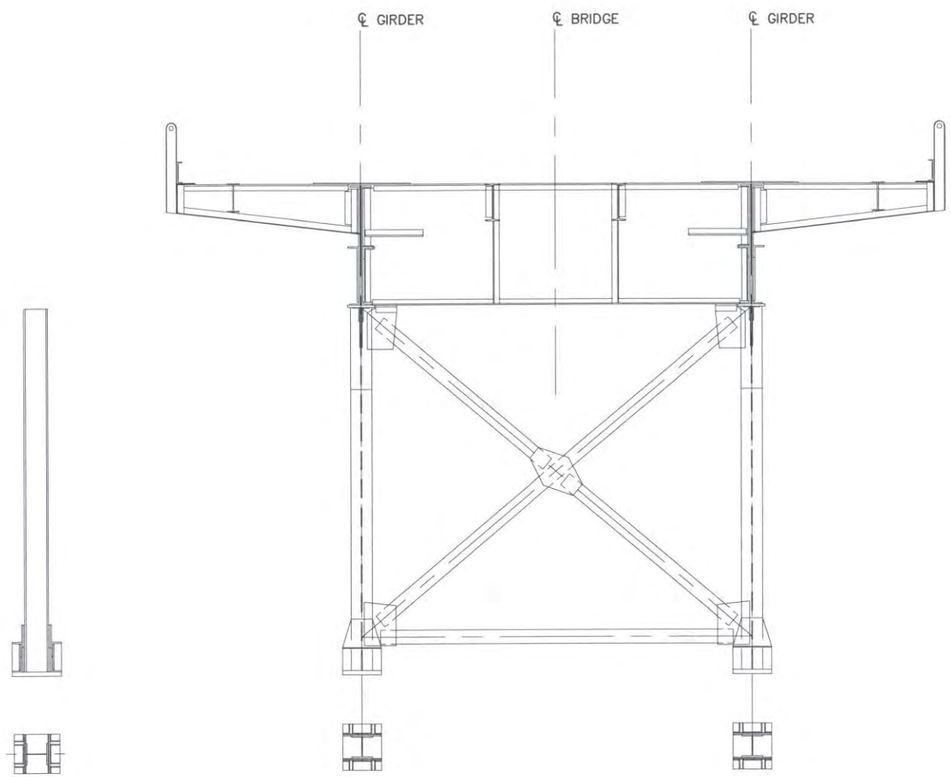

WEST ELEVATION
(LOOKING EAST)

SOUTH ELEVATION
(LOOKING NORTH)

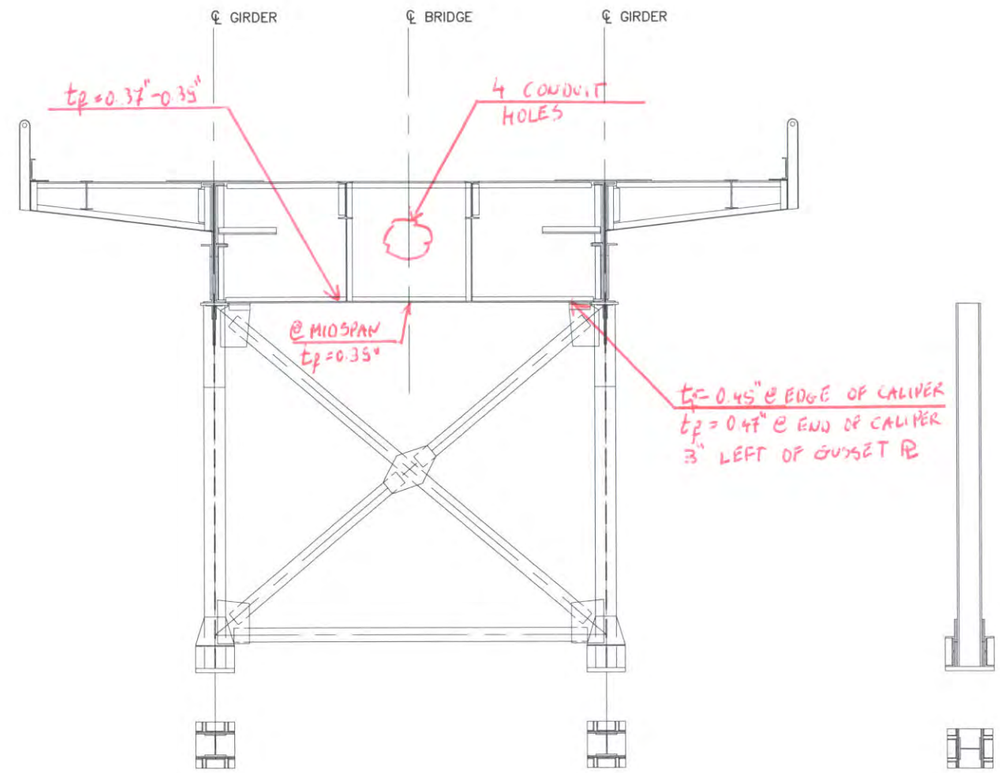

NORTH ELEVATION
(LOOKING SOUTH)

EAST ELEVATION
(LOOKING WEST)

Hoyle, Tanner Associates, Inc.
Consulting Engineers
150 Dow Street.
Manchester, NH 03101-1227
Tel 603-669-5555, Fax 603-669-4168
Web Page: www.hoyletanner.com
© Copyright 2009

SARAH LONG BRIDGE
PIER 25 BENT

INSPECTED BY: JB & EGW	DATE: 6-6-09 6-4-09	SCALE: NTS

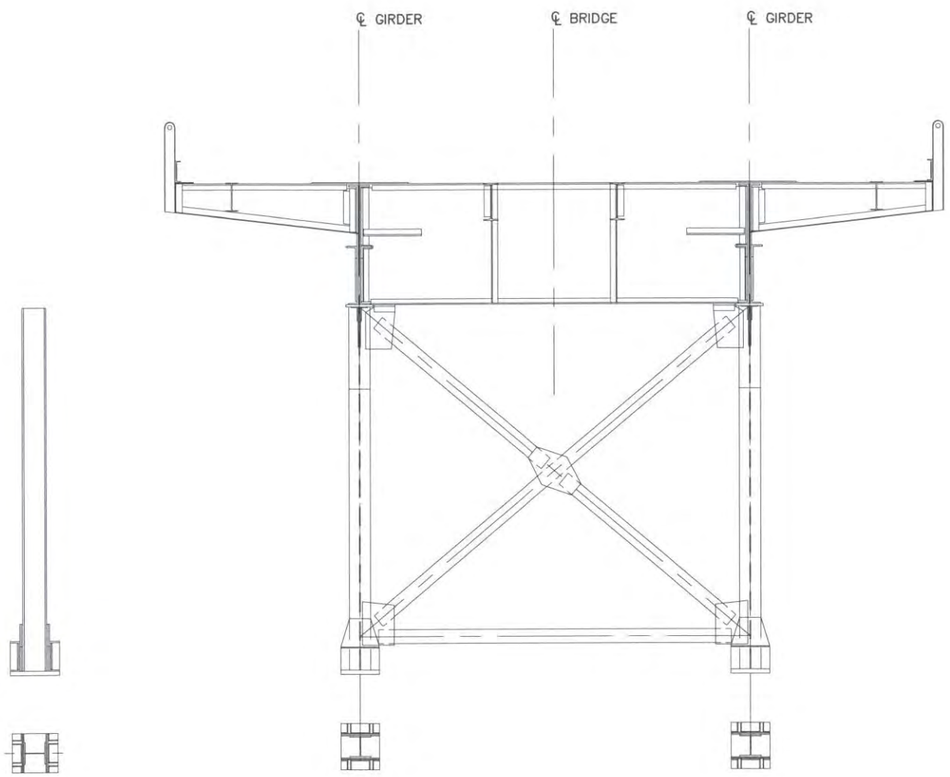

WEST ELEVATION
(LOOKING EAST)

SOUTH ELEVATION
(LOOKING NORTH)

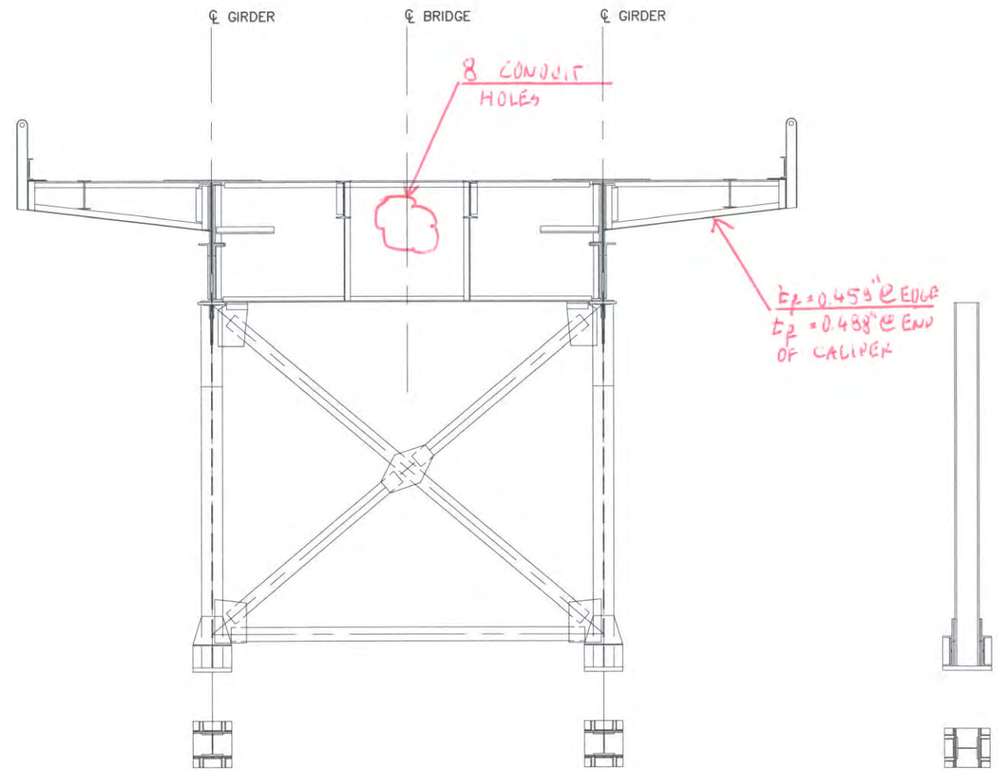

NORTH ELEVATION
(LOOKING SOUTH)

EAST ELEVATION
(LOOKING WEST)

Hoyle, Tanner Associates, Inc.
Consulting Engineers

150 Dow Street.
Manchester, NH 03101–1227
Tel 603–669–5555, Fax 603–669–4168
Web Page: www.hoyletanner.com
© Copyright 2009

SARAH LONG BRIDGE
PIER 26 BENT

INSPECTED BY: JB & EGW	DATE: 6-4-2009	SCALE: NTS