MaineDOT

ENGINEERING INSTRUCTION

Title: MaineDOT Guidelines on Crosswalks	Number: C6
Discipline: General Engineering	
Originators: Stephen Landry and Regional Traffic Engineers	
	Issue Date: March 6, 2013
Approved By: Kenneth L. Sweeney, P.E., Chief Engineer	Revised Date: March 14, 2013 Revison#2 Date: October 13, 2016

Crosswalks are marked areas where pedestrians can safely cross a roadway. By law in the State of Maine (Title 29-A Subsection 2056, 4) any vehicle must yield the right-of-way to a pedestrian who has entered a marked crosswalk when a traffic control device is not in operation. This law makes it imperative that crosswalk placement, markings and usage be done in a uniform way.

Section 1: ADA (Required)

1. All crosswalks shall meet the criteria put forth in the American's with Disabilities Act (ADA) and at a minimum will include truncated domes, proper flares, slopes and tip downs for the appropriate configuration shown in Figures 3 through 11 below.

Section 2: MUTCD (Required)

2. All crosswalks shall meet the latest *Manual on Uniform Traffic Control Devices (MUTCD)* Section 3B.18 Crosswalk marking standards. They shall be a minimum of six (6) feet wide and marked with white paint as shown on the attached sheet Figure 2. Crosswalks shall be painted at least annually and shall be retro-reflective for nighttime visibility. Crosswalks should be lighted for nighttime use. For added visibility, the zebra (diagonal style markings) or the Continental (piano key style marking) should be used.

3. Crosswalks shall have the appropriate signage (W11-2 series from the *Manual on Uniform Traffic Control Devices*, see section 2C.50 of the MUTCD). These signs shall be black symbol on yellow background or black symbol on fluorescent yellow-green background. Signs of different background colors should not be mixed at a given site or area. (See Figure 12) In-Street signing will be allowed as a supplement to side of the road signing only and not in lieu of it. (See Figure 13)

4. No parking shall be allowed within 20 feet of any unsignalized crosswalk (includes mid-block) and 30 feet at a signalized intersection. Parking restrictions can be removed when bump-outs or curb extensions are built. These allow the pedestrian to be seen by the traveling public. Signs should be installed indicating that no parking is allowed. (see Figure 1)

Section 3: Required Safety

5. Crosswalks shall only be placed in areas where there is sufficient stopping sight distance for the posted speed limit as set forth in Table 1. Stopping sight distance for the purpose of evaluating a crosswalk shall be measured from a 3.5 foot driver eye height to a 3.5 foot pedestrian height.

Table 1 – Sight Distance

Posted Speed (MPH)	Sight Distance (Feet)
20	155
25	200
30	250
35	305
40	360

6. Crosswalks shall only be installed in areas where the speed limit is 40 mph or less, unless the intersection is controlled by a traffic signal.

7. If a municipality proposes a crosswalk on a roadway with more than 1 lane in any direction (does not include a center turn lane) or a crosswalk at 40 mph posted speed, the municipality is required to get approval from the State Traffic Engineer or his/her designee.

Table 2 – Number of Lanes Vs Speed

Roadway Lanes	≤ 35 MPH	40 MPH @	≥45 MPH *
2 Lanes	Allowed	Allowed, Consider pedestrian activated flashers	Allowed at fully actuated traffic signals only
3 Lanes	Allowed	Allowed with pedestrian activated flashers	Allowed at fully actuated traffic signals only
4 or more lanes	Allowed, Consider pedestrian activated flashers	Allowed with pedestrian activated flashers	Allowed at fully actuated traffic signals only

***Only at fully actuated signals with existing or proposed sidewalks.**
@ Crosswalks at unsignalized locations in 40 mph settings should be accompanied by yield bars and associated signage. In areas with 4 or 5 lanes that signage should be installed overhead. See Figure 14.

Section 4: General Safety (Required unless a Program Manager indicates otherwise) #

8. All crosswalks should extend from one safe landing zone to another. A safe landing zone is an area where a pedestrian is safe from vehicle conflict while waiting to cross or when completing the crossing. Islands, walkways and sidewalks are typically considered safe landing zones, while road shoulders, driveways (under normal circumstances) and parking areas are not considered safe landing zones. Provisions should be made for winter maintenance of the landing zones, including but not limited to snow and ice removal. The safe landing area should not be confused with the "Turning Space" required at the top of each ramp.

9. Crosswalks should, to the maximum extent practicable, be perpendicular to the highway. No crosswalks shall be constructed more than 30 degrees from perpendicular, unless the angle of intersecting roadways is more than a 30 degree skew.

10. Crosswalks should be located a minimum distance of 400 feet apart. The July 2009 edition of *Complete Streets Design Guidelines* (p.23) indicates "pedestrians will not walk more than 200 feet laterally in order to cross a street, and pedestrians will begin to seek out mid-block crossing opportunities when spacing exceeds 400 feet."

11. Crosswalks in school zones should have crossing guards for times when school is starting and ending. School crosswalks should be at roadway intersections. Mid-block crossings should only be used when a high concentration of students will be using them, as driver expectation is not to have to stop at a mid-block location.

12. Municipalities are entitled to place crosswalks on state or state aid highways, if they are in accordance with these guidelines. Municipalities are highly encouraged to create an ordinance, indicating at a minimum, that sections 1 through 3 are followed. If a municipality wants a crosswalk that does not meet one or more items in Section 4, they would need to submit a traffic study indicating that the location of the crosswalk would be safe. Placement of crosswalks other than as specified shall require approval by the State Traffic Engineer or his/her designee.

All crosswalks will be reviewed during the Project Development process. Unless the Program Manager or State Traffic Engineer approves otherwise, crosswalks not meeting the standards above will not be replaced in the field. The municipality will be contacted and informed that the said crosswalk(s) doesn't meet our standards and not to repaint the crosswalk. The Program Manager or State Traffic Engineer may allow a crosswalk to remain if it doesn't meet 1 or more of the standards in Section 4 providing there is documentation of the reasons it should remain and how it will impact the safety of the pedestrian.

Crosswalks at signalized intersections: All new crosswalks installed at signalized intersections or existing crosswalks at a signal intersections being modified or replaced shall be required to have pedestrian countdown heads installed as well as Accessible Pedestrian Signal (APS) technology. Signalized crosswalks will be allowed at all posted speeds. For signalized crosswalks above 40 mph, additional all red time should be considered for the safety of the pedestrian. This will help ensure that when the pedestrian phase starts, all vehicles have cleared the intersection.

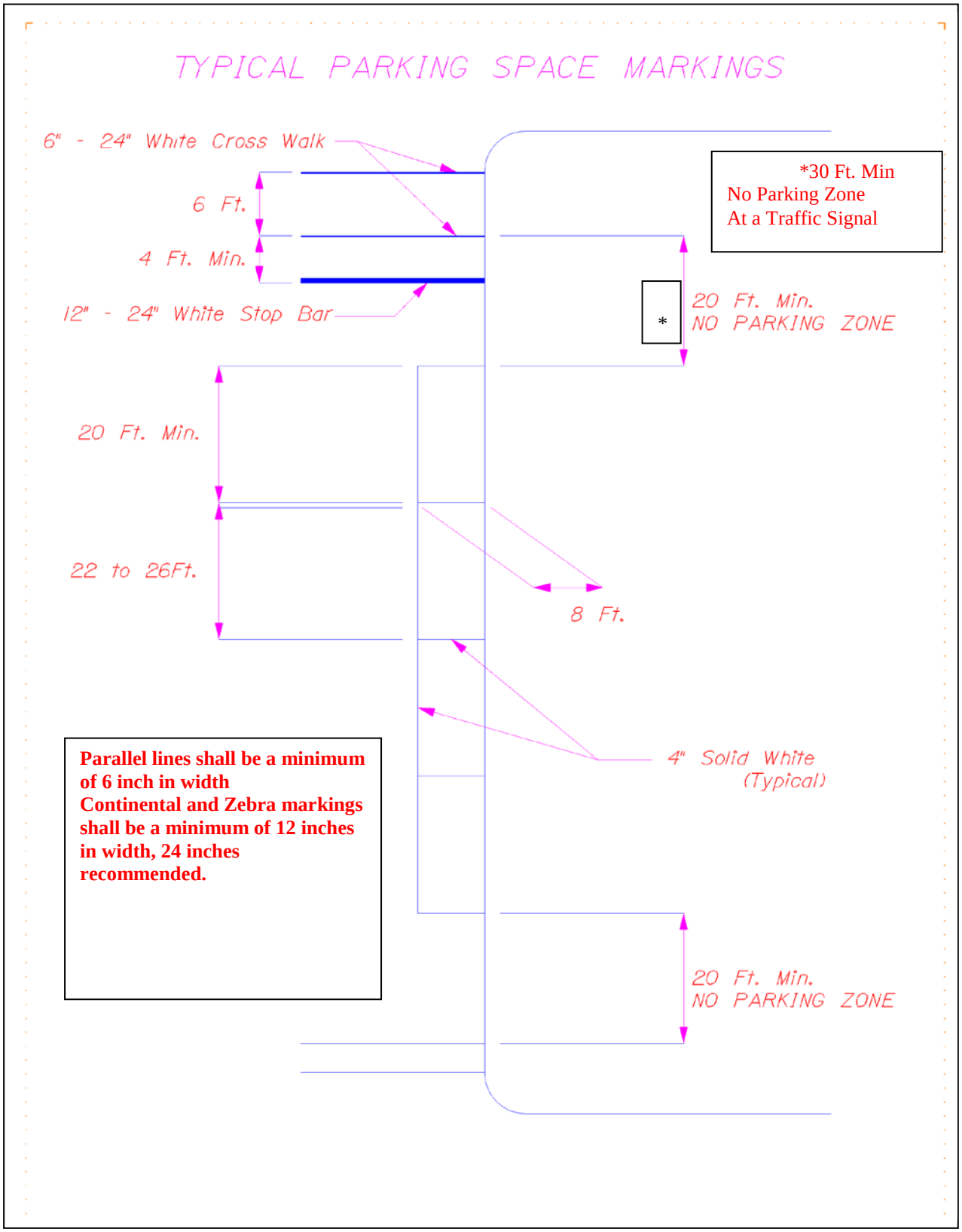

Figure 1

Revised 3-14-13

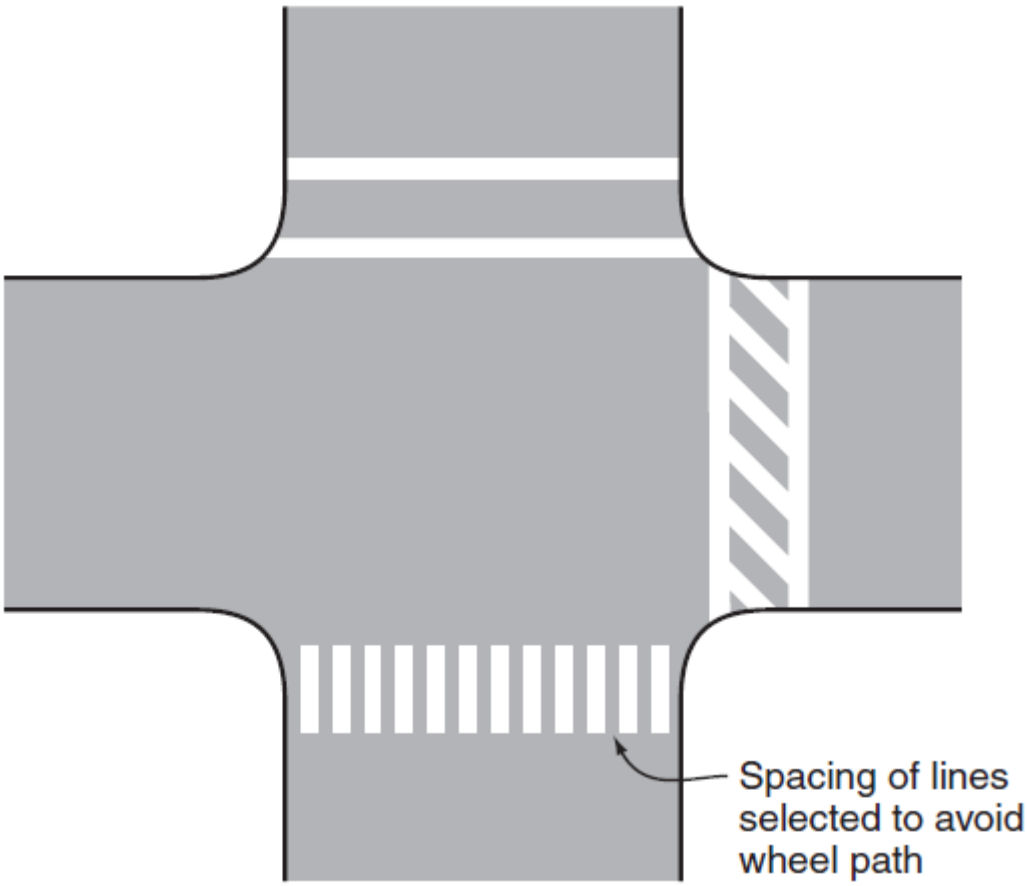

Figure 2

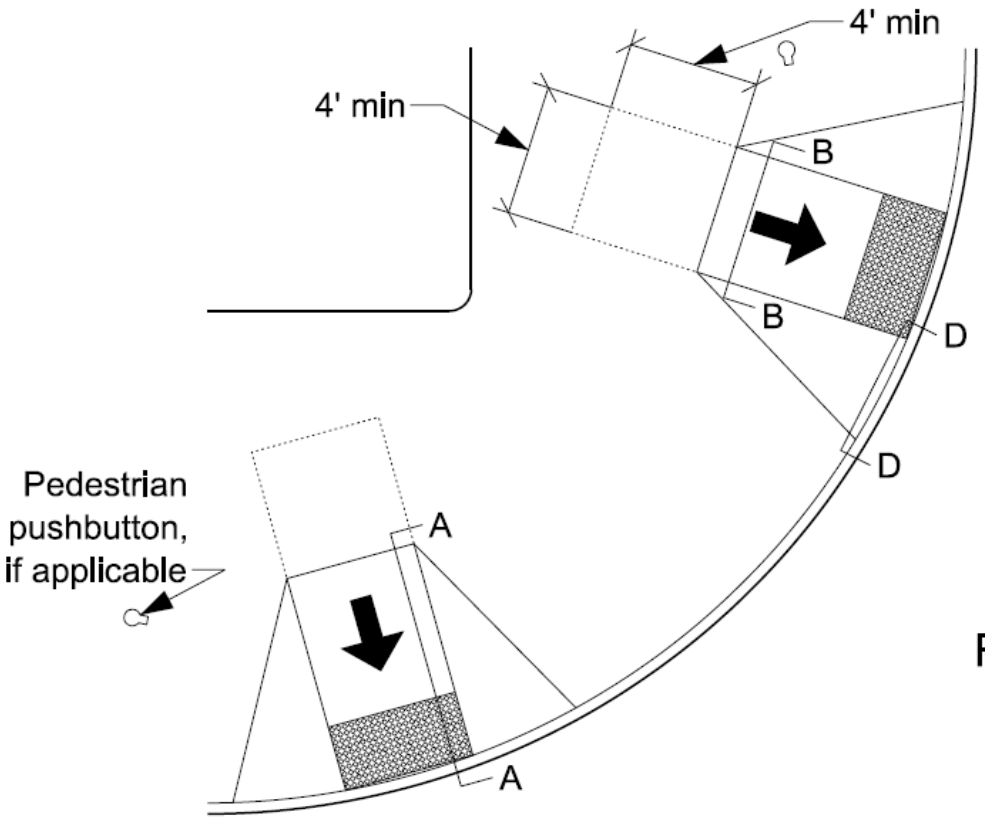

Figure 3

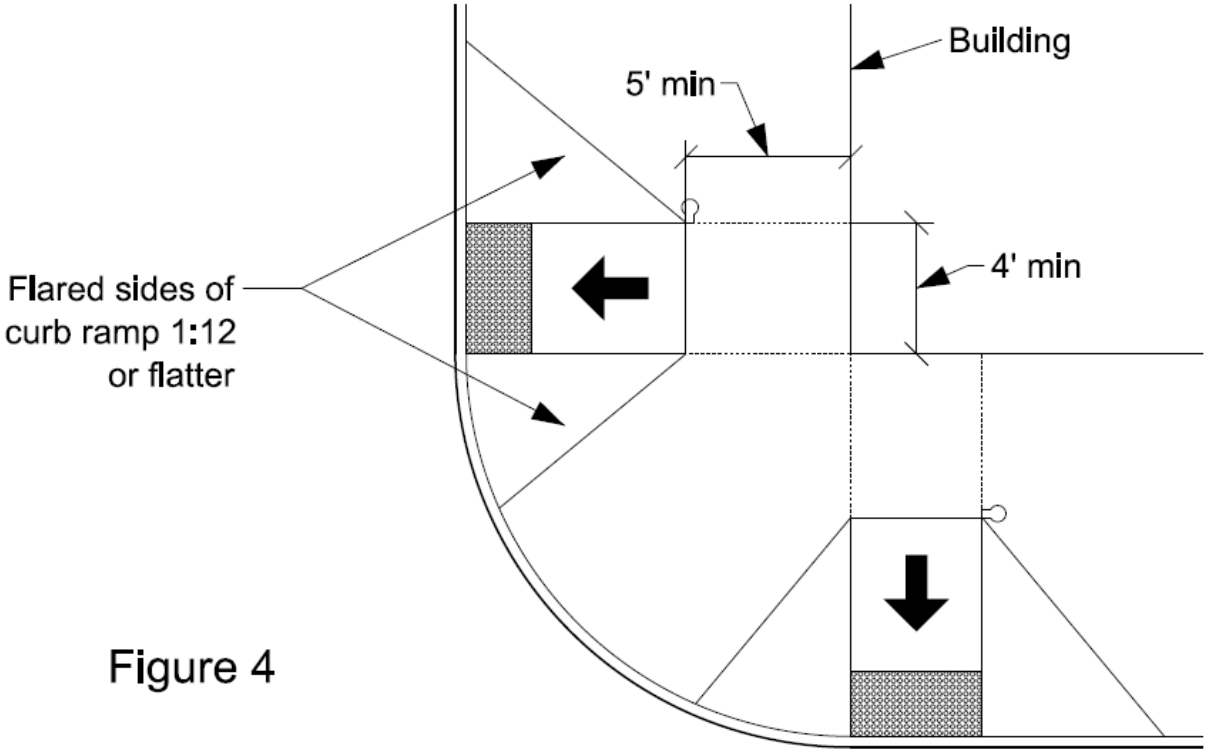

Figure 4

10/04/2016

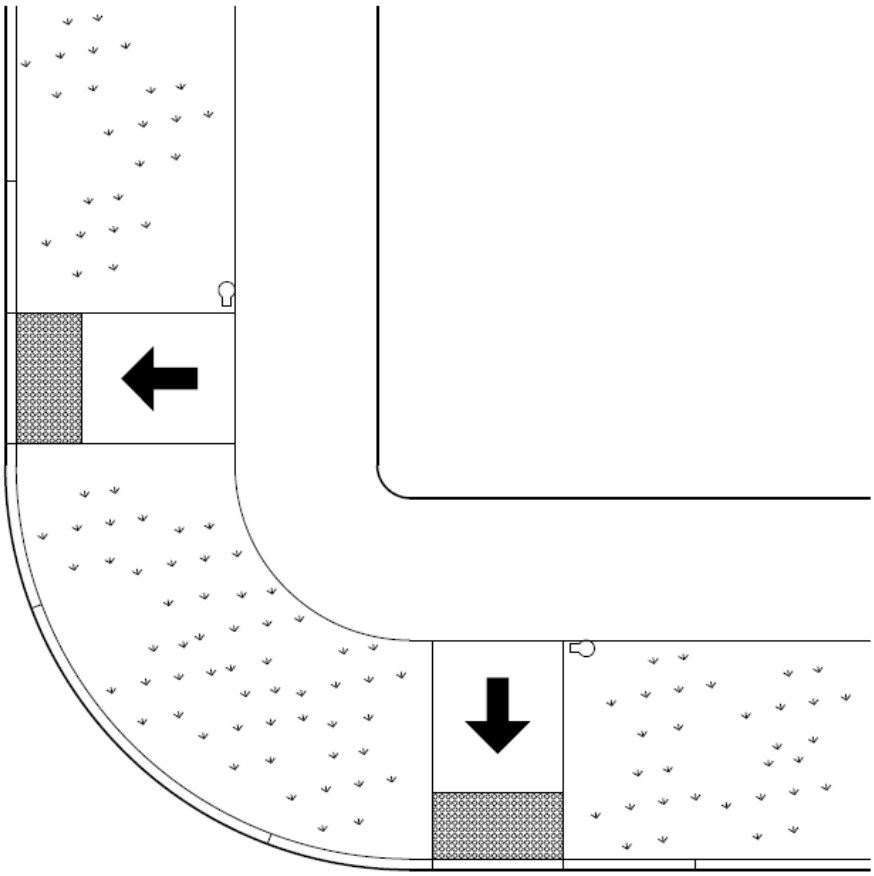

Figure 5

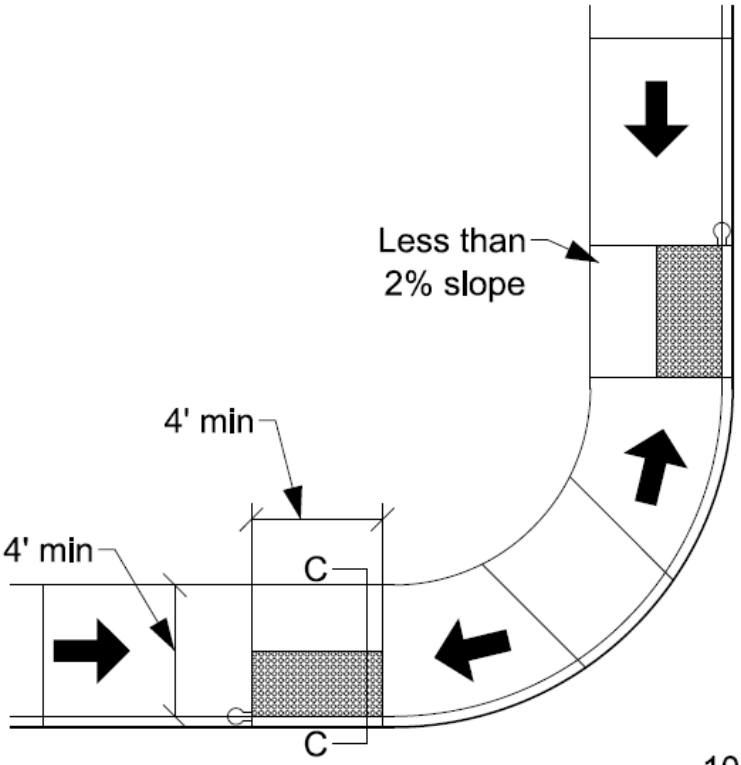

Figure 6

10/04/2016

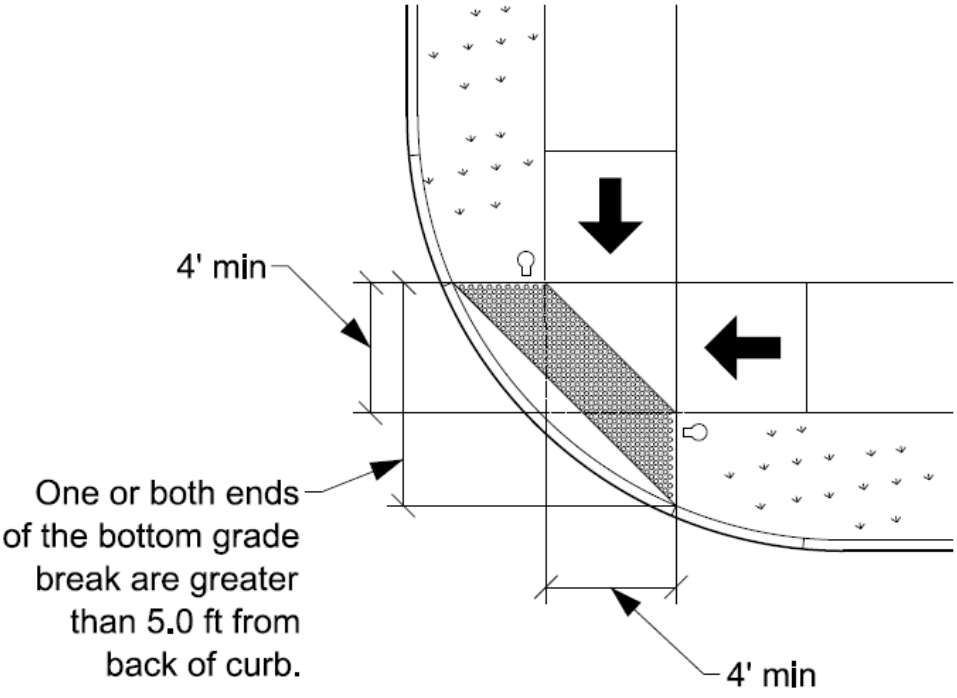

Figure 7

Figure 8

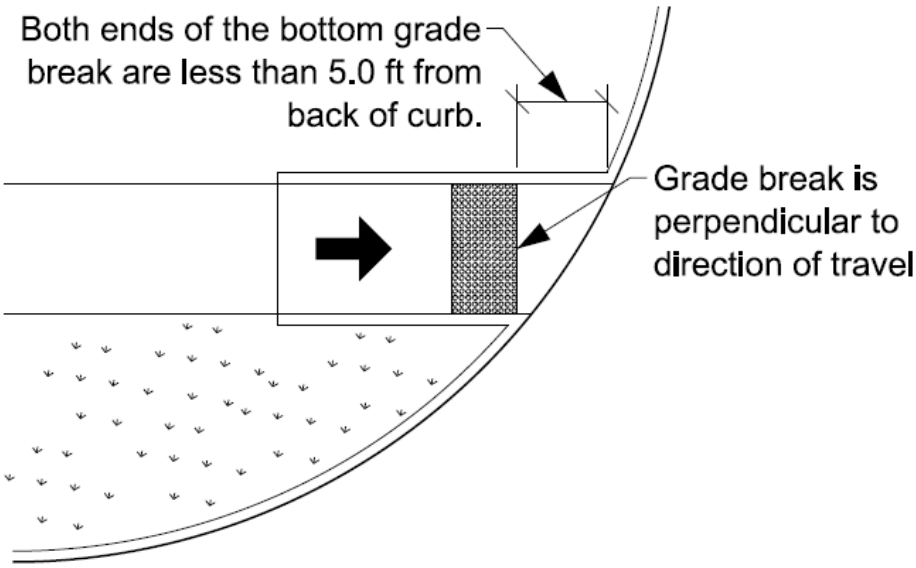

10/04/2016

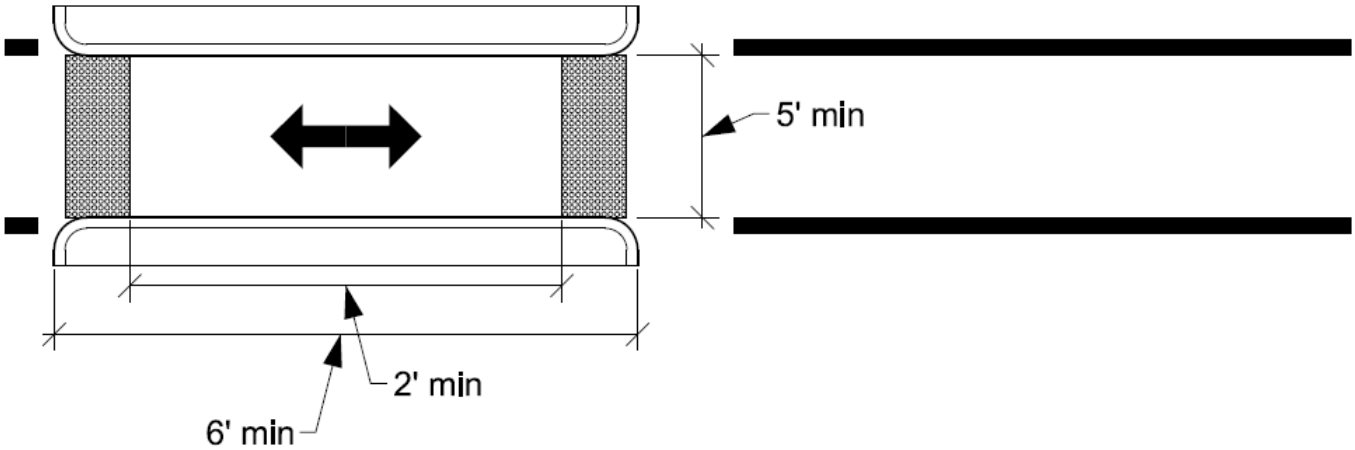

Figure 9 - Median Island at Grade

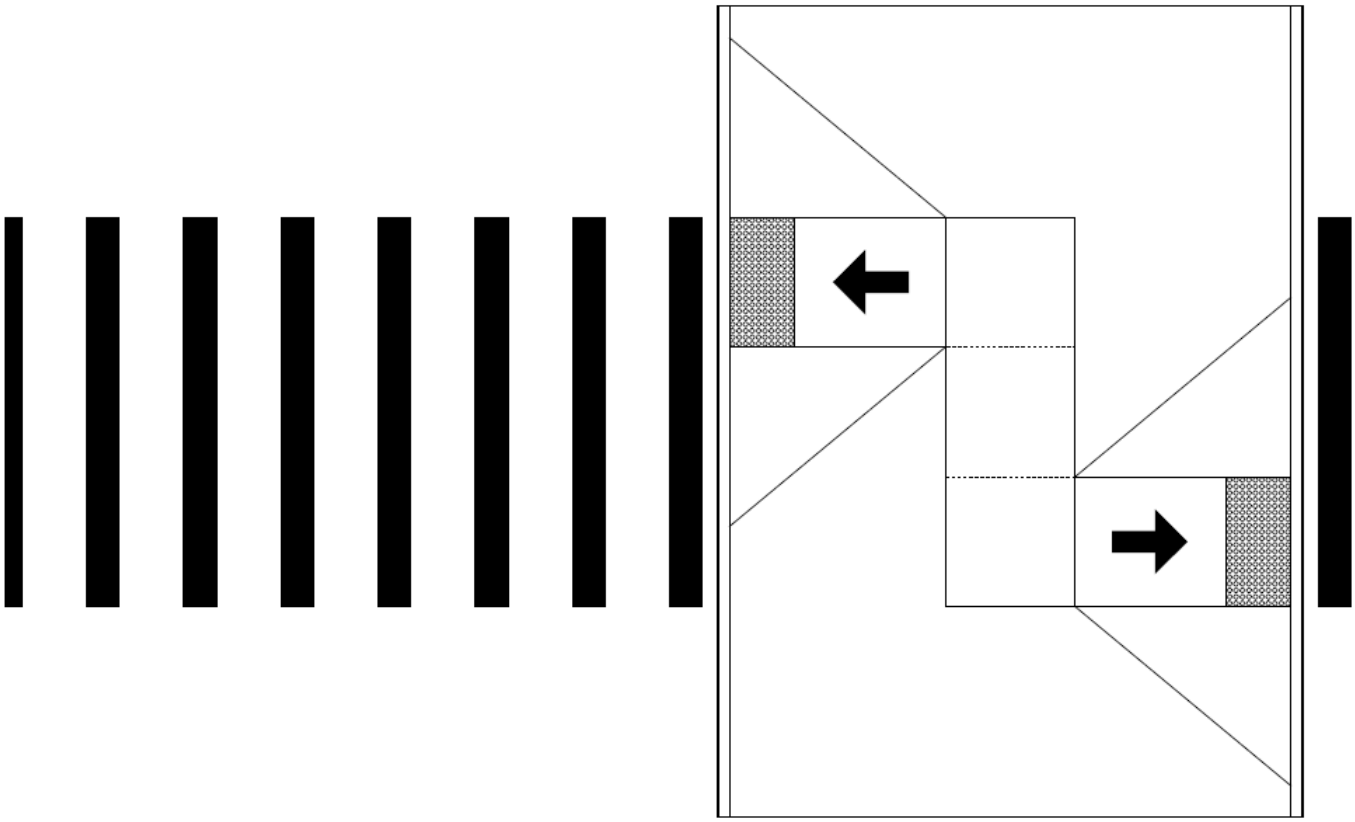

Figure 10 - Median Island at Grade or Raised

10/04/2016

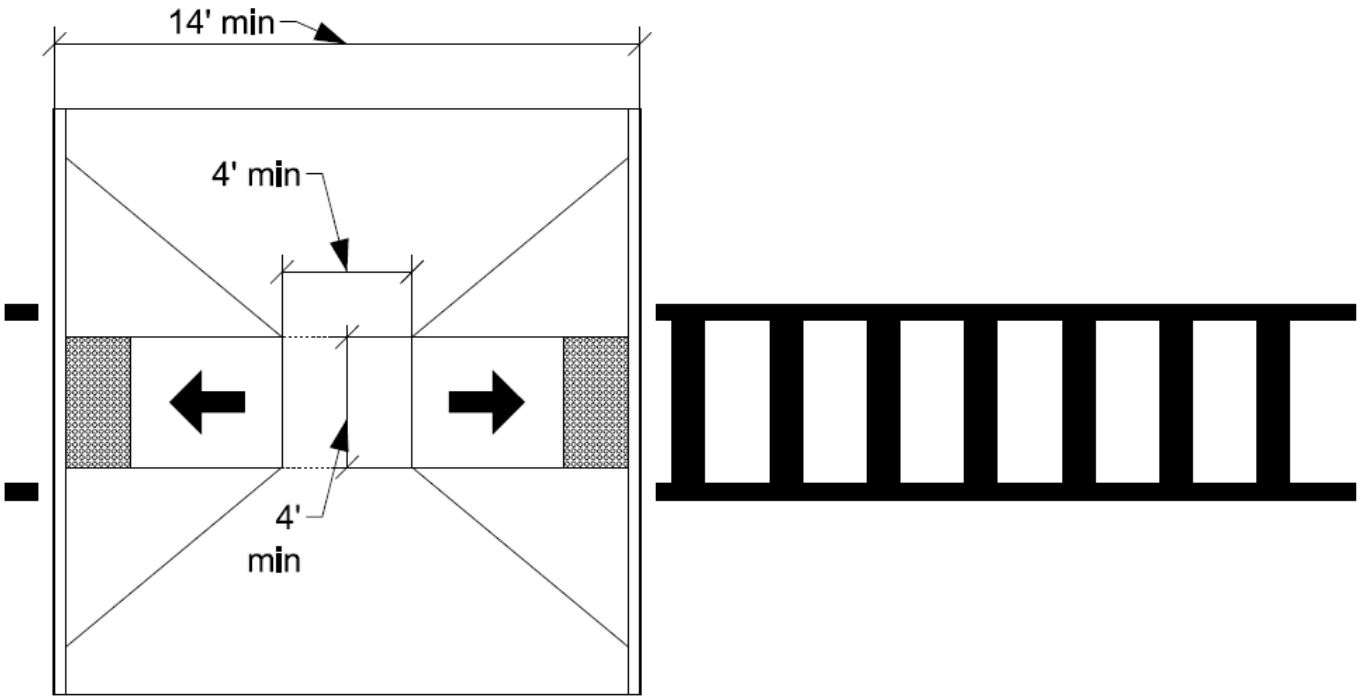

Figure 11 - Raised Median Island

Guidance from 2009 Edition MUTCD, Section 4E.08-Pedestrian Detectors

04 If pedestrian pushbuttons are used, they should be capable of easy activation and conveniently located near each end of the crosswalks. Except as provided in Paragraphs 5 and 6, pedestrian pushbuttons should be located to meet all of the following criteria:

A. Unobstructed and adjacent to a level all-weather surface to provide access from a wheelchair;

B. Where there is an all-weather surface, a wheelchair accessible route from the pushbutton to the ramp;

C. Between the edge of the crosswalk line (extended) farthest from the center of the intersection and the side of a curb ramp (if present), but not greater than 5 feet from said crosswalk line;

D. Between 1.5 and 6 feet from the edge of the curb, shoulder, or pavement;

E. With the face of the pushbutton parallel to the crosswalk to be used; and

F. At a mounting height of approximately 3.5 feet, but no more than 4 feet, above the sidewalk.

05 Where there are physical constraints that make it impractical to place the pedestrian pushbutton adjacent to a all-weather surface, the surface should be as level as feasible.

06 Where there are physical constraints that make it impractical to place the pedestrian pushbutton between 1.5 and 6 feet from the edge of the curb, shoulder, or pavement, it should not be farther than 10 feet from the edge of curb, shoulder, or pavement.

07 Except as provided in Paragraph 8, where two pedestrian pushbuttons are provided on hte same corner of a signalized location, the pushbuttons should be separated by a distance of at least 10 feet.

Option:

08 Where there are physical constraints on a particular corner taht make it impractical to provide the 10-foot separation between the two pedestrian pushbuttons, the pushbuttons may be placed closer together or on the same pole.

Figure 12 – Standard crosswalk signing uses both the S1-1 and W 16-7 P – Advanced assemblies use S1-1 and W 16-9 P

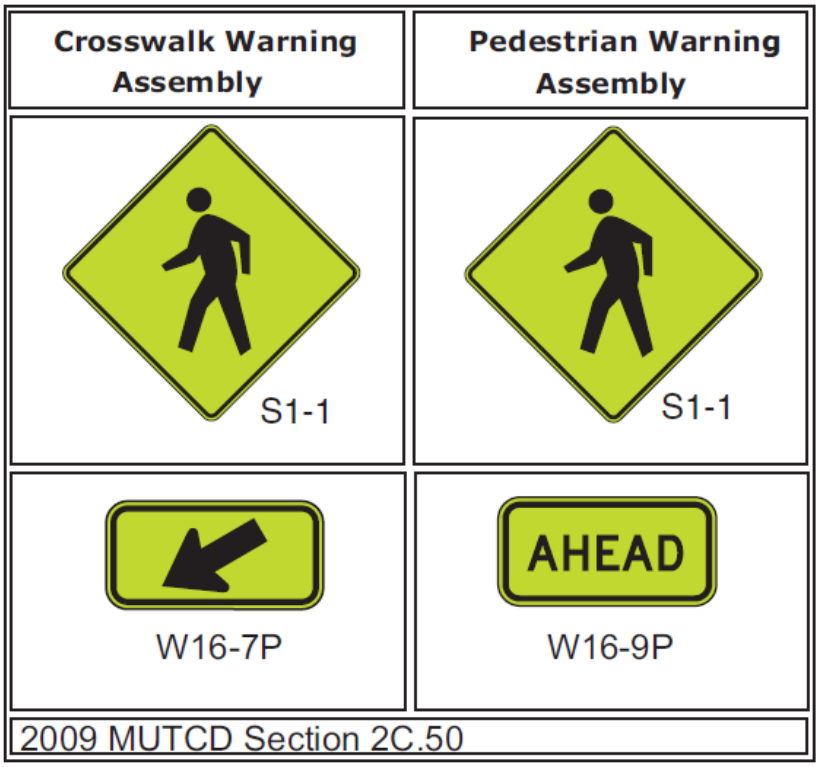

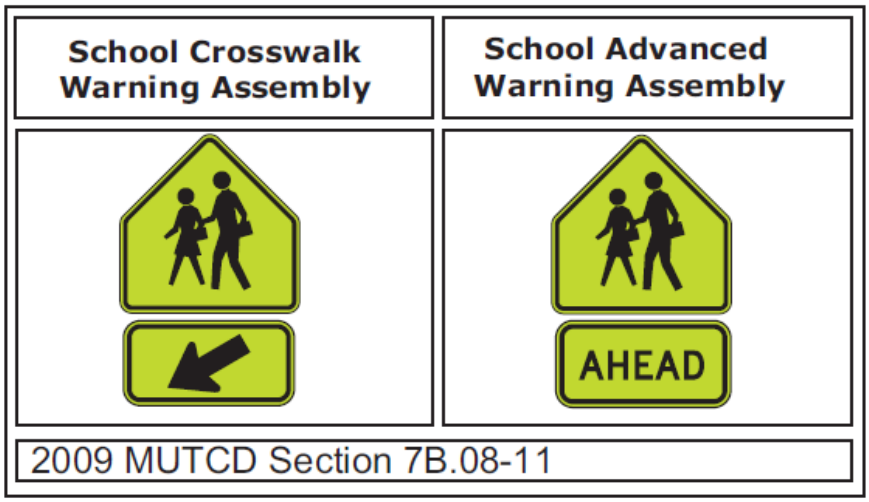

Figure 13. - In-Street Pedestrian Signing

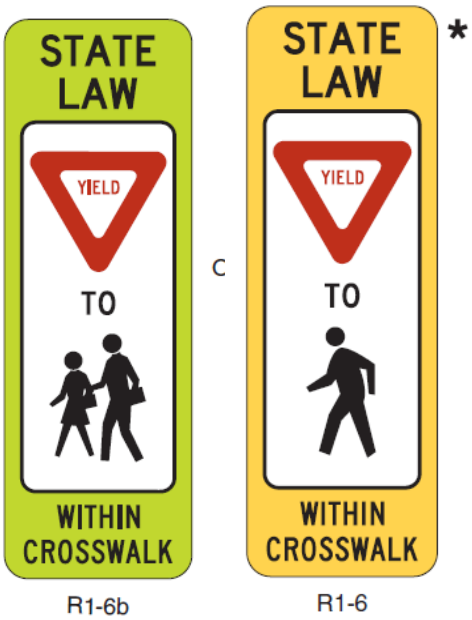

Figure 14 – Yield Bars and Associated Signage

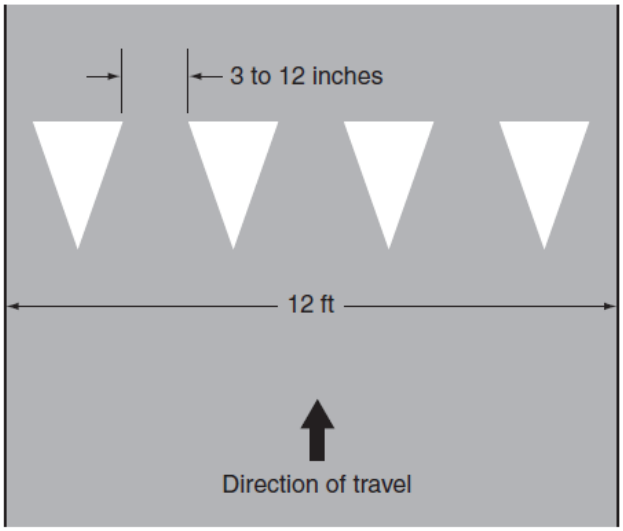

(b) Maximum Dimensions

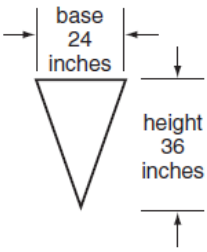

Notes:
Triangle height is equal to 1.5 times the base dimension.

Yield lines may be smaller than suggested when installed on much narrower, slow-speed facilities such as shared-use paths.

R1-5

R1-5a