CONTRACT DRAWINGS
EASTPORT PORT AUTHORITY
BREAKWATER REHABILITATION
EASTPORT, MAINE
CONTRACT NO. 83-2

INDEX TO DRAWINGS

TITLE	SHEET NO.
SITE PLAN	C-1
DREDGING PLAN	C-2
MARSHALLING YARD & DETAIL SHEET	C-3
DREDGE SECTIONS & DISPOSAL AREAS	C-4
FINAL DREDGING PLAN	C-5
DEMOLITION & EXCAVATION	S-1
PILE PLAN	S-2
DECKING/PILE CAP PLAN	S-3
PILE CAP - REINFORCING DETAILS	S-4
DECKING DETAILS	S-5
ANCHOR BEAM DETAILS	S-6
SHIP FENDER SYSTEM	S-7
SMALL VESSEL FENDER SYSTEM	S-8
MOORING DOLPHINS	S-9
CATHODIC PROTECTION	S-10
FENDER MODIFICATIONS	S-11

LOCATION MAP

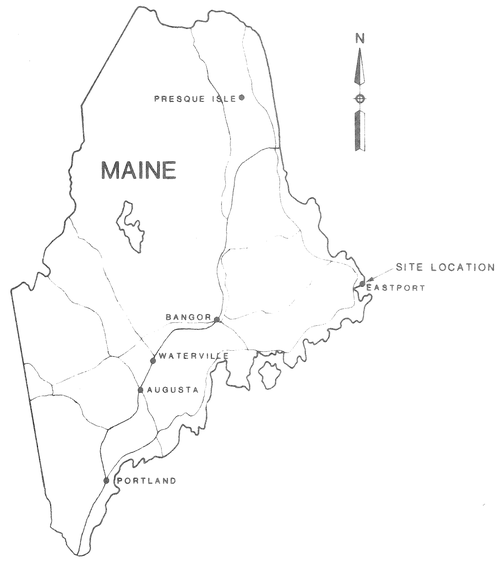

RECORD DRAWINGS

THESE RECORD DRAWINGS HAVE BEEN PREPARED TO SHOW THOSE CHANGES MADE DURING THE CONSTUCTION PROCESS, BASED ON NOTES BY THE ENGINEER AND MARKED-UP PRINTS, DRAWINGS, AND OTHER DATA FURNISHED BY THE CONTRACTOR TO THE ENGINEER AND WHICH THE ENGINEER CONSIDERS SIGNIFICANT.

MORRISON GEOTECHNICAL ENGINEERING
RFD 3 BOX 7230 CHINA ROAD
WINSLOW, MAINE 04902
(207) 873-4283

EDA PROJECT NO. 01-01-02573

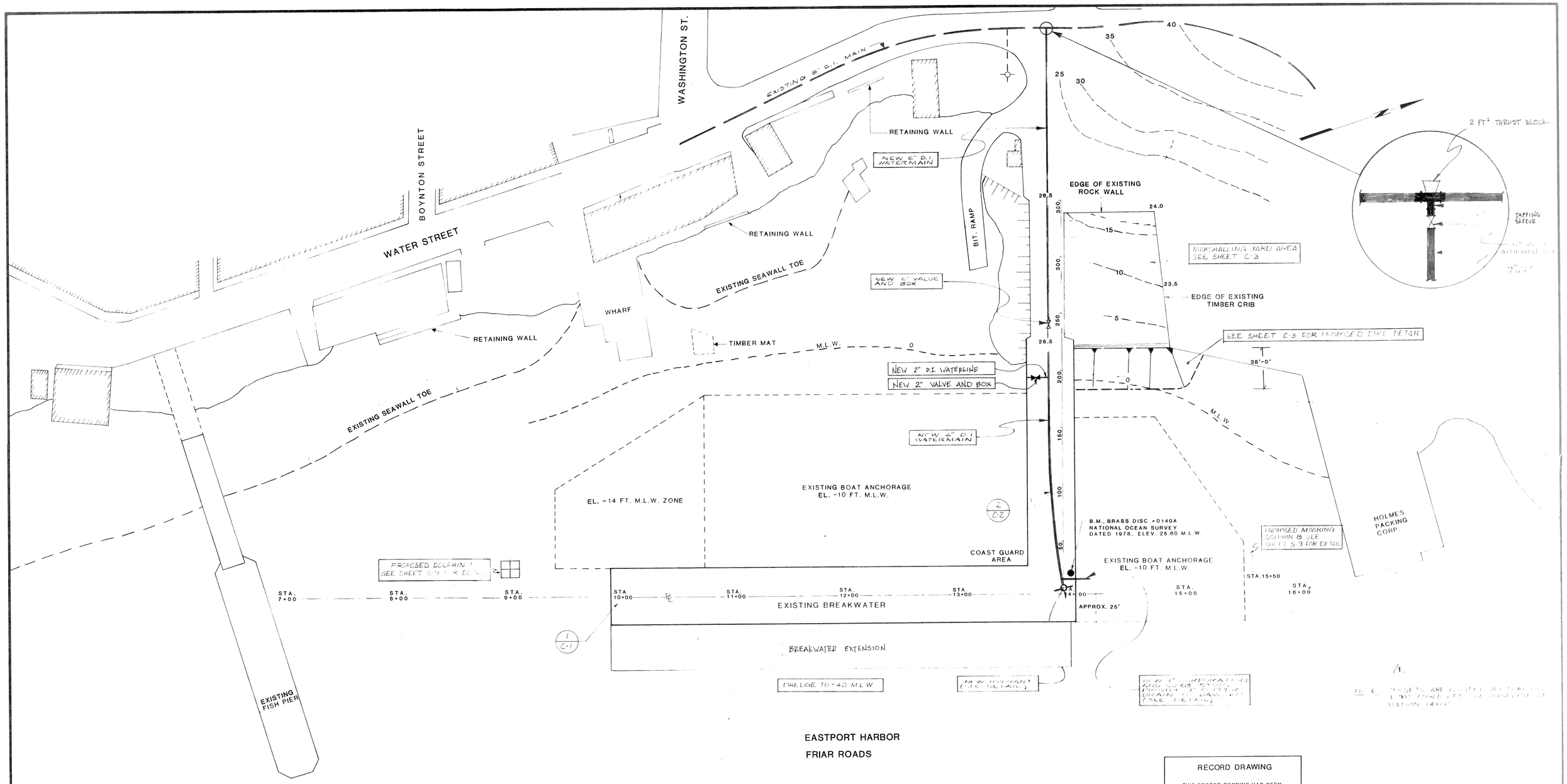

RECORD DRAWING

THIS RECORD DRAWING HAS BEEN PREPARED TO SHOW THOSE CHANGES MADE DURING THE CONSTRUCTION PROCESS, BASED ON THE NOTES BY THE ENGINEER AND MARKED - UP PRINTS, DRAWINGS, AND OTHER DATA FURNISHED BY THE CONTRACTOR TO THE ENGINEER AND WHICH THE ENGINEER CONSIDERS SIGNIFICANT.

REVISIONS

NO	DESCRIPTION	DATE	APPD
3	RECORD DRAWING C.O.8, C.O.9		
2	EDA PROJECT NUMBER ADDED	8/22/84	
1	NOTE ADDED	5/14/84	

STATE OF MAINE — EDWARD MORRISON — No 2464 — REGISTERED PROFESSIONAL ENGINEER

MORRISON GEOTECHNICAL ENGINEERING
WINSLOW, MAINE 04902

REG. PROF. ENG. NO. 2464 DATE

EASTPORT PORT AUTHORITY
EDA NO 01-01-02573
BREAKWATER REHABILITATION PROJECT
CONTRACT NO 83-2
PORT OF EASTPORT
SITE PLAN

SHEET NO. C 1 OF 5
MGE JOB NO. 1808
REG JOB NO. 543-83

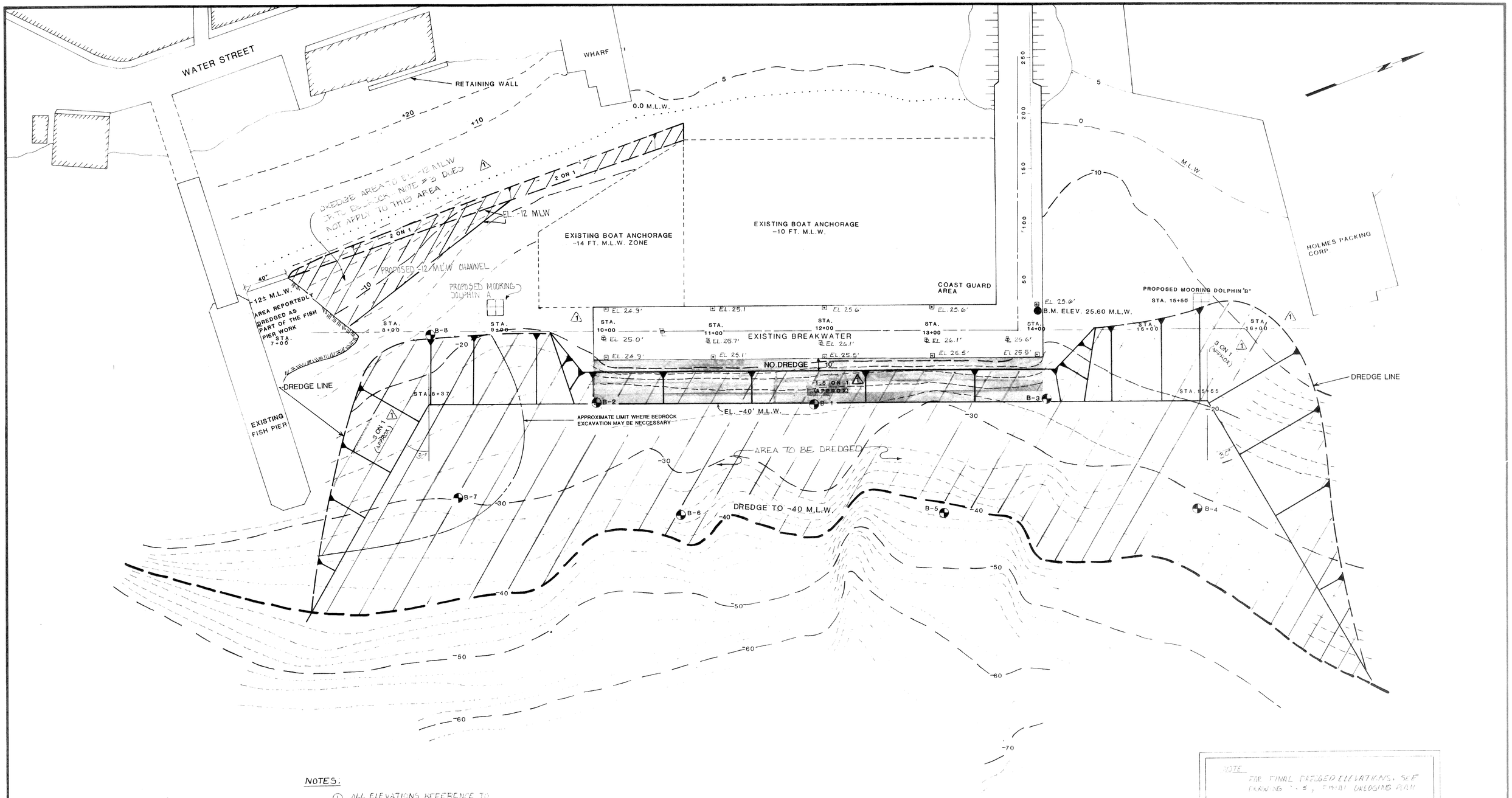

NOTE
FOR FINAL DREDGED ELEVATIONS, SEE DRAWING C-5, FINAL DREDGING PLAN

LEGEND

- B-X — BORING NUMBER
- BORING LOCATION
- PROPOSED NEW DECK ADDITION
- 40 — EXISTING CONTOURS
- BASELINE LAYOUT
- APPROXIMATE ELEVATION OF BITUMINOUS CONCRETE SURFACE AT INSIDE EDGE OF SHEETING

NOTES:

1. ALL ELEVATIONS REFERENCE TO MEAN LOW WATER (M.L.W. = 0.00)
2. CONTOUR INFORMATION FROM:
   FATHOMETER STUDY BY MORRISON GEOTECHNICAL ENGINEERING
   U.S. ARMY ENGINEER DIVISION, NEW ENGLAND, CORPS OF ENGINEERS, BREAKWATER AND HARBOR LINING PLAN DATED MAY 1961, DRAWING NO. 1457 D-9-4.
   PROK MARINE, INC., SOUNDINGS AND SWEEP DATA, DATED AUGUST 19, 1982.
3. NO MATERIAL SHALL REMAIN ABOVE ELEVATIONS INDICATED WITHIN THE AREAS TO BE DREDGED
4. NO PAYMENT WILL BE MADE FOR EXCAVATION OF SOIL OR ROCK BELOW THE ELEVATION INDICATED.

CONTOUR INTERVAL: 2 FEET

SCALE:	1"=40'
DATE:	4/13/84
DRAWN BY:	CL
CHECKED BY:	DET

RECORD DRAWING

THIS RECORD DRAWING HAS BEEN PREPARED TO SHOW THOSE CHANGES MADE DURING THE CONSTRUCTION PROCESS, BASED ON THE NOTES BY THE ENGINEER AND MARKED - UP PRINTS, DRAWINGS, AND OTHER DATA FURNISHED BY THE CONTRACTOR TO THE ENGINEER AND WHICH THE ENGINEER CONSIDERS SIGNIFICANT.

REVISIONS			
3	RECORD DRAWING		
2	EDA PROJECT NUMBER ADDED	8/22/84	
1	NOTE ADDED, ELEVATIONS ADDED,		
	CONTOURS NEAR BREAKWATER REVISED	5/14/84	
NO.	DESCRIPTION	DATE	APPD

STATE OF MAINE — EDWARD F. MORRISON NO. 2464 — REGISTERED PROFESSIONAL ENGINEER

MORRISON GEOTECHNICAL ENGINEERING
WINSLOW, MAINE 04902

REG. PROF. ENG. NO. 2464 DATE

EASTPORT PORT AUTHORITY
EDA NO. 01 01 02573
BREAKWATER REHABILITATION PROJECT
CONTRACT NO. 83-2
PORT OF EASTPORT

DREDGING PLAN

SHEET NO. C-2 OF 5
MGE JOB NO. 1805
GEC JOB NO. 543-83

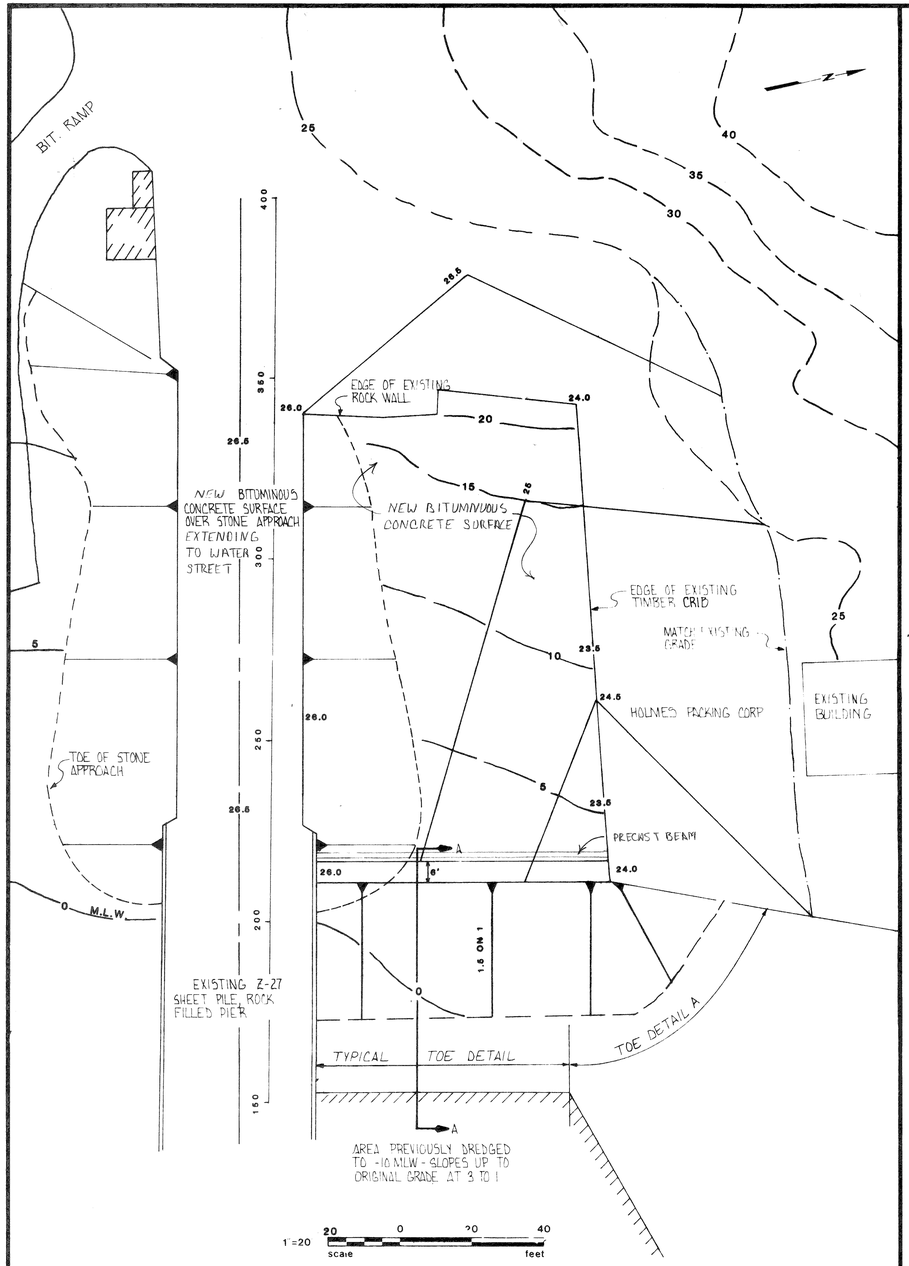

MARSHALLING YARD DETAIL

LEGEND
—5— EXISTING CONTOUR
—25— PROPOSED FINAL ELEVATION

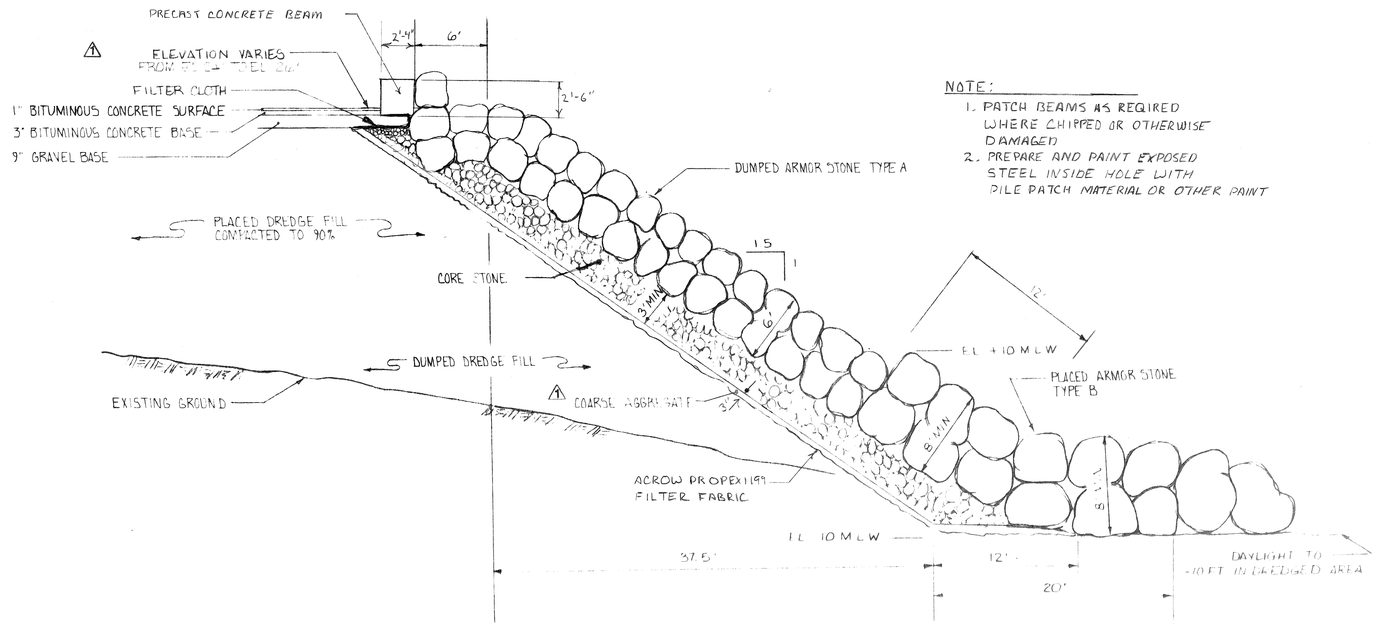

NOTE:
1. PATCH BEAMS AS REQUIRED WHERE CHIPPED OR OTHERWISE DAMAGED
2. PREPARE AND PAINT EXPOSED STEEL INSIDE HOLE WITH PILE PATCH MATERIAL OR OTHER PAINT

SECTION AA
(TYPICAL SECTION)
-10 FT. M.L.W. BERTHING AREA
SCALE: 1"=6'

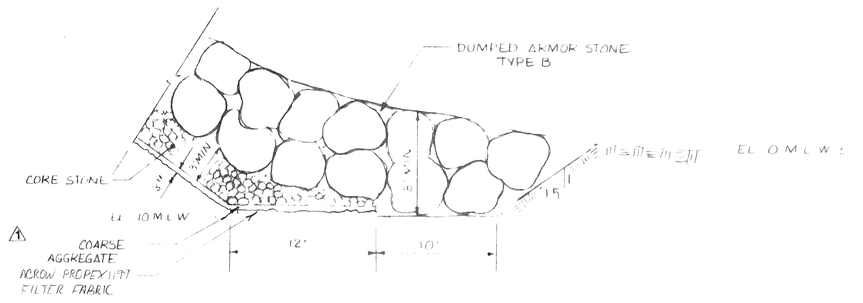

TOE DETAIL A
NON DREDGED AREA
SCALE: 1"=6'

	ARMOR STONE TYPE A	ARMOR STONE TYPE B	CORE STONE	⚠2 COARSE AGGREGATE SIZE	⚠2 COARSE AGGREGATE % PASSING
MAXIMUM SIZE	3.5 TONS	1 TONS	800 POUNDS	2"	100
85% SIZE	3 TONS	0 TONS	600 POUNDS	1½	95-100
50% SIZE	2.5 TONS	0.2 TONS	250 POUNDS	1	60-85
25% SIZE	2 TONS	4.5 TONS	6" INCHES	¾	30-70
2% SIZE	1.5 TONS	4 TONS	2 INCHES	¼"	10-45
MINIMUM SIZE	1 TON	3 TONS	1 INCH	⅜	10-30
				NO. 4	0-5
				NO. 200	1.5 MAX

DETAILED REQUIREMENTS FOR RIPRAP ARE PRESENTED IN SPECIFICATION SECTION 02250, RIPRAP IN THE PROJECT MANUAL.

RECORD DRAWING

THIS RECORD DRAWING HAS BEEN PREPARED TO SHOW THOSE CHANGES MADE DURING THE CONSTRUCTION PROCESS. BASED ON THE NOTES BY THE ENGINEER AND MARKED - UP PRINTS, DRAWINGS, AND OTHER DATA FURNISHED BY THE CONTRACTOR TO THE ENGINEER AND WHICH THE ENGINEER CONSIDERS SIGNIFICANT.

REVISIONS			
⚠3	RECORD DRAWING 1808-1010,087, CO.7,CO.10,CO.12		
⚠2	EDA PROJECT NUMBER ADDED	8/22/84	
⚠1	REVISIONS TO DETAIL NOTES	5/14/84	
NO.	DESCRIPTION	DATE	APPD

SCALE:	AS NOTED
DATE:	4/13/84
DRAWN BY:	CL
CHECKED BY:	DET

STATE OF MAINE EDWARD J. MORRISON No 2464 REGISTERED PROFESSIONAL ENGINEER

MORRISON GEOTECHNICAL ENGINEERING
WINSLOW, MAINE 04902

REG. PROF. ENG. NO. 2464 — DATE 5/14/84

EASTPORT PORT AUTHORITY
⚠2 EDA NO. 01-01-02573
BREAKWATER REHABILITATION PROJECT
CONTRACT NO. 83-2
PORT OF EASTPORT
MARSHALLING YARD & DETAIL SHEET

SHEET NO. C-3 OF 5
MGE JOB NO. 1808
GEO JOB NO. 543-83

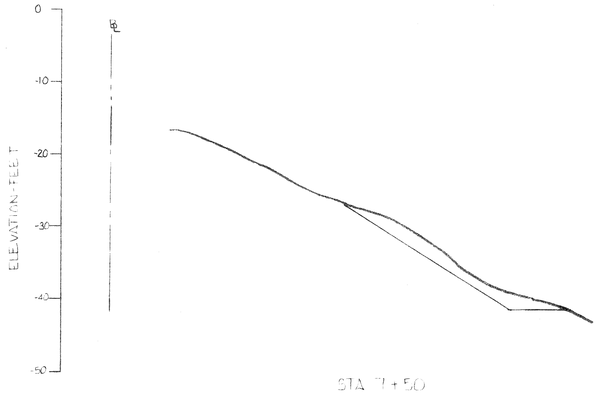

STA 7+50

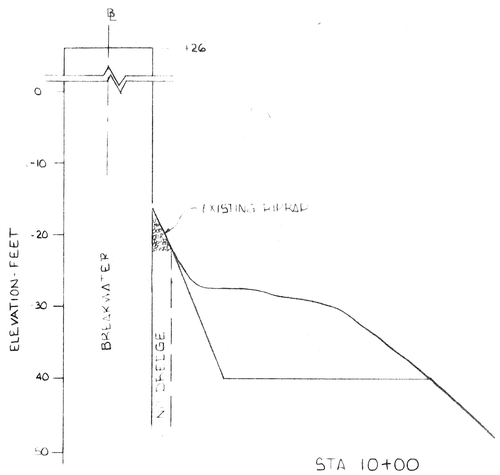

STA 10+00

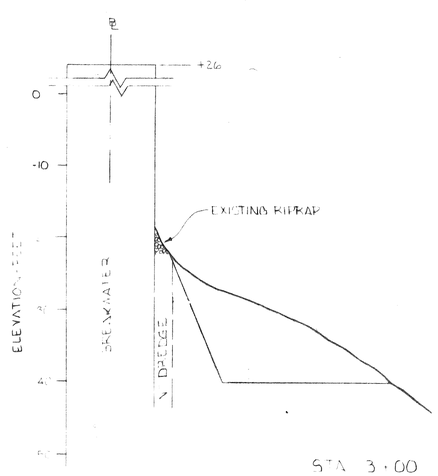

STA 3+00

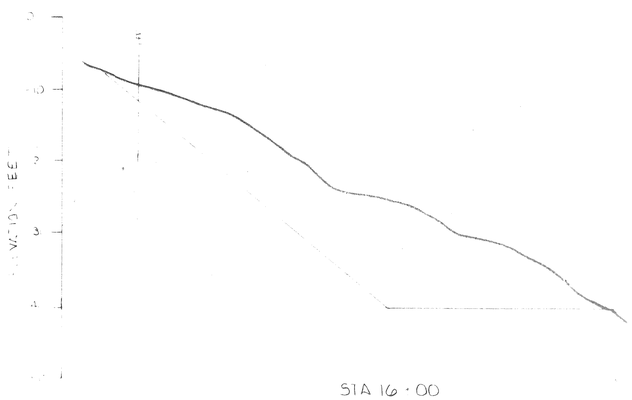

STA 16+00

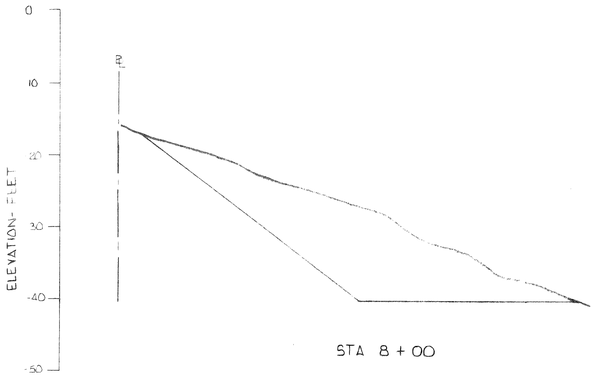

STA 8+00

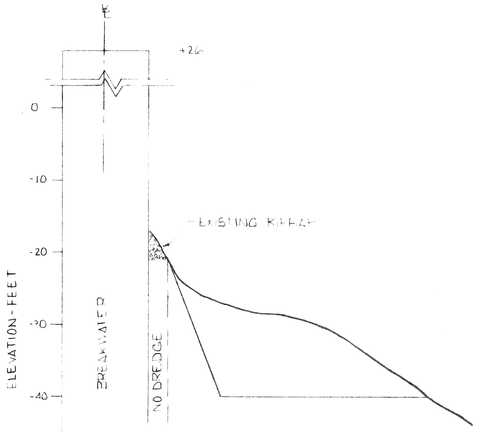

STA 11+00

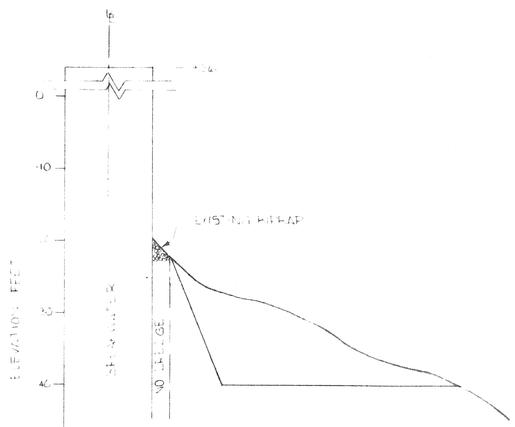

STA 14+00

LOCATION MAP
SCALE 1"=2

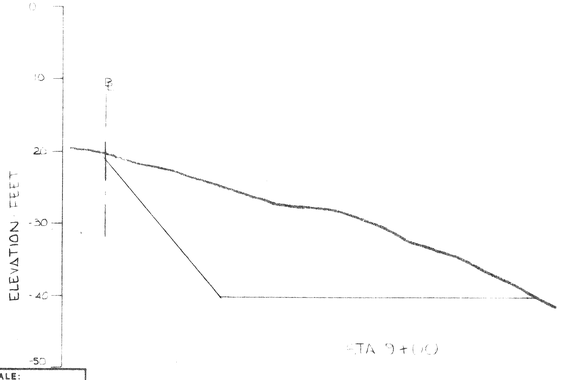

STA 9+00

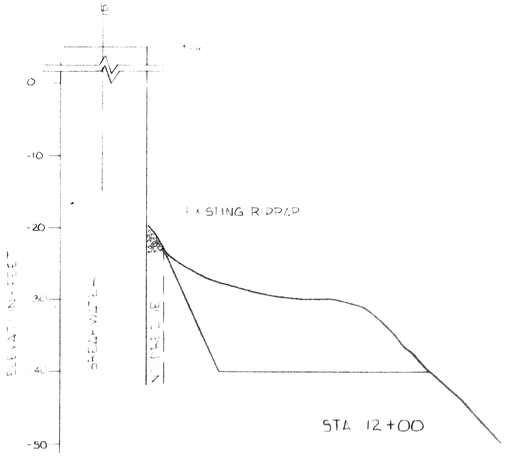

STA 12+00

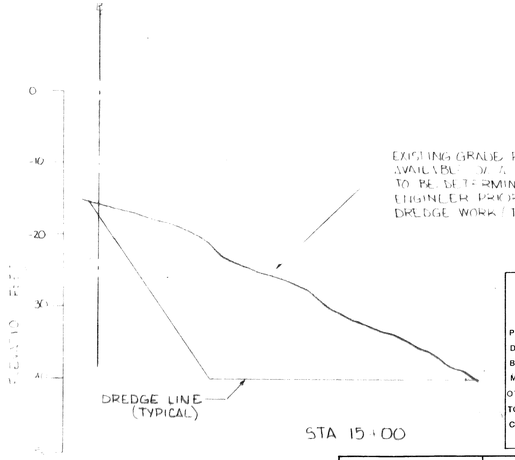

STA 15+00

NOTE:
FOR FINAL DREGED ELEVATIONS, SEE DRAWING C-5, FINAL DREDGING PLAN

RECORD DRAWING

THIS RECORD DRAWING HAS BEEN PREPARED TO SHOW THOSE CHANGES MADE DURING THE CONSTRUCTION PROCESS, BASED ON THE NOTES BY THE ENGINEER AND MARKED - UP PRINTS, DRAWINGS, AND OTHER DATA FURNISHED BY THE CONTRACTOR TO THE ENGINEER AND WHICH THE ENGINEER CONSIDERS SIGNIFICANT.

REVISIONS			
3	RECORD DRAWING		
2	EDA PROJECT NUMBER ADDED	8/22/84	DBJ
1	SECTIONS REVISED, RIPRAP ADDED	5/14/84	DBJ
NO.	DESCRIPTION	DATE	APPD

SCALE: AS NOTED
DATE: 4/13/84
DRAWN BY: CL
CHECKED BY: DET

LEGEND
℄ BASELINE

SCALE
HORIZONTAL 1"=40'
VERTICAL 1"=10

STATE OF MAINE · EDWARD J. MORRISON No. 2464 · REGISTERED PROFESSIONAL ENGINEER

MORRISON GEOTECHNICAL ENGINEERING
WINSLOW, MAINE 04902

REG. PROF. ENG. NO. 2464 — DATE 5/10/84

EASTPORT PORT AUTHORITY
EDA NO. 01-01-02573
BREAKWATER REHABILITATION PROJECT
CONTRACT NO. 83-2
PORT OF EASTPORT
DREDGE SECTIONS & DISPOSAL AREAS

SHEET NO. C-4 OF 5
MGE JOB NO. 1808
CEC JOB NO. 543-83

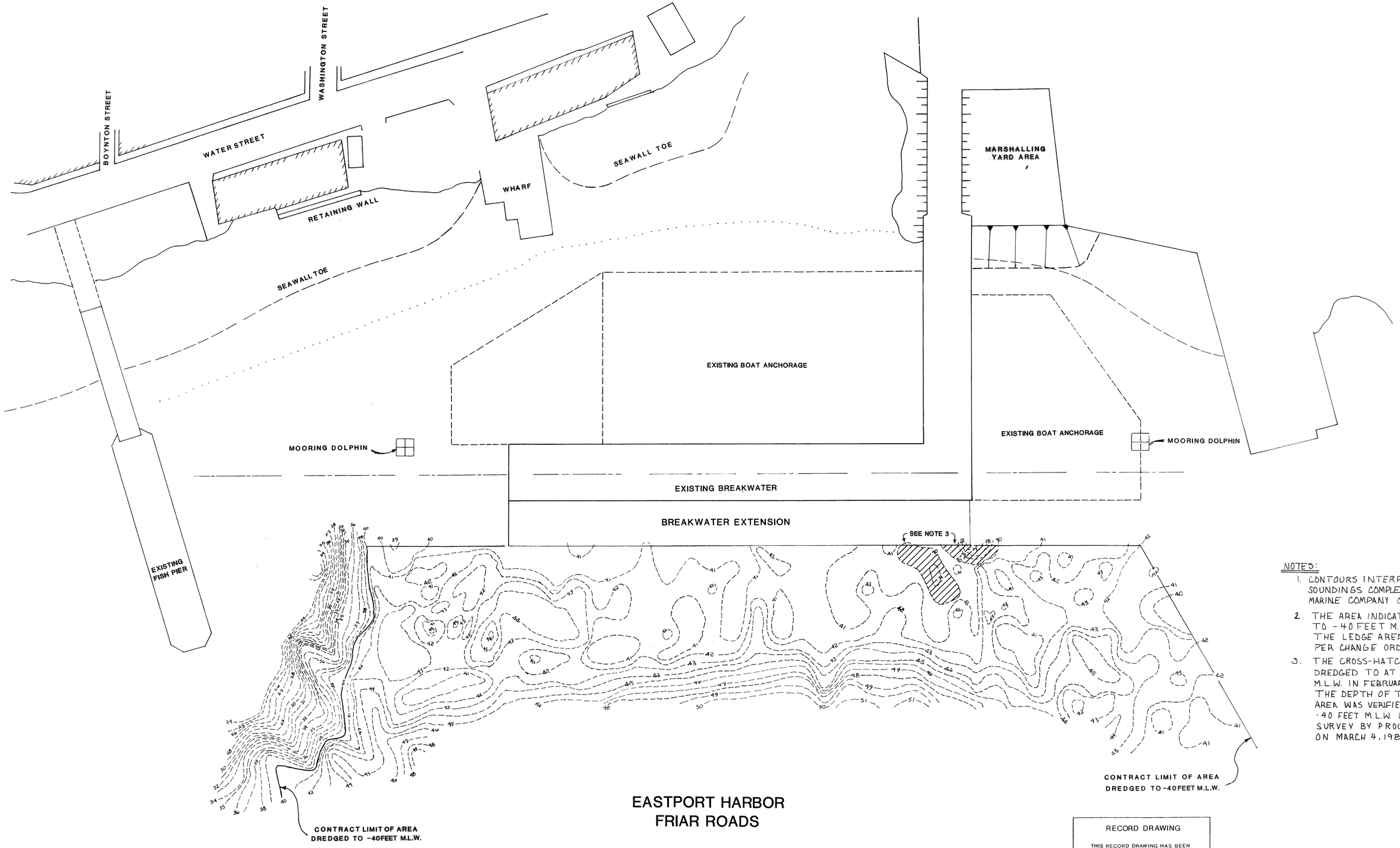

EASTPORT HARBOR
FRIAR ROADS

NOTES:

1. CONTOURS INTERPOLATED FROM SOUNDINGS COMPLETED BY PROCK MARINE COMPANY ON JULY 8, 1985
2. THE AREA INDICATED AS DREDGED TO -40 FEET M.L.W. EXCLUDES THE LEDGE AREA LEFT HIGH AS PER CHANGE ORDER NO. 2.
3. THE CROSS-HATCHED AREAS WERE DREDGED TO AT LEAST -40 FEET M.L.W. IN FEBRUARY 1986. THE DEPTH OF THE ENTIRE DREDGED AREA WAS VERIFIED TO BE AT LEAST -40 FEET M.L.W. BY A BAR AND CHAIN SURVEY BY PROCK MARINE COMPANY ON MARCH 4, 1986.

RECORD DRAWING

THIS RECORD DRAWING HAS BEEN PREPARED TO SHOW THOSE CHANGES MADE DURING THE CONSTRUCTION PROCESS, BASED ON THE NOTES BY THE ENGINEER AND MARKED - UP PRINTS, DRAWINGS, AND OTHER DATA FURNISHED BY THE CONTRACTOR TO THE ENGINEER AND WHICH THE ENGINEER CONSIDERS SIGNIFICANT.

REVISIONS

NO.	DESCRIPTION	DATE

SCALE: 1"=40'
DATE: AUGUST 1985
DRAWN BY: KJH
CHECKED BY: DET

STATE OF MAINE — EDWARD M. MORRISON — REGISTERED PROFESSIONAL ENGINEER

MORRISON GEOTECHNICAL ENGINEERING
WINSLOW, MAINE

REG. PROF. ENG. NO. 2464 — DATE 8/5/86

EASTPORT PORT AUTHORITY
EDA NO. 01-01-02573
BREAKWATER REHABILITATION PROJECT
CONTRACT NO. 83-2
PORT OF EASTPORT

FINAL DREDGING PLAN

DRAWING NO. C-5 OF 5
MGE JOB NO. 1808
CE JOB NO. 543-83

2020 KJH 7/19/85
2020 KMM 8/9/85

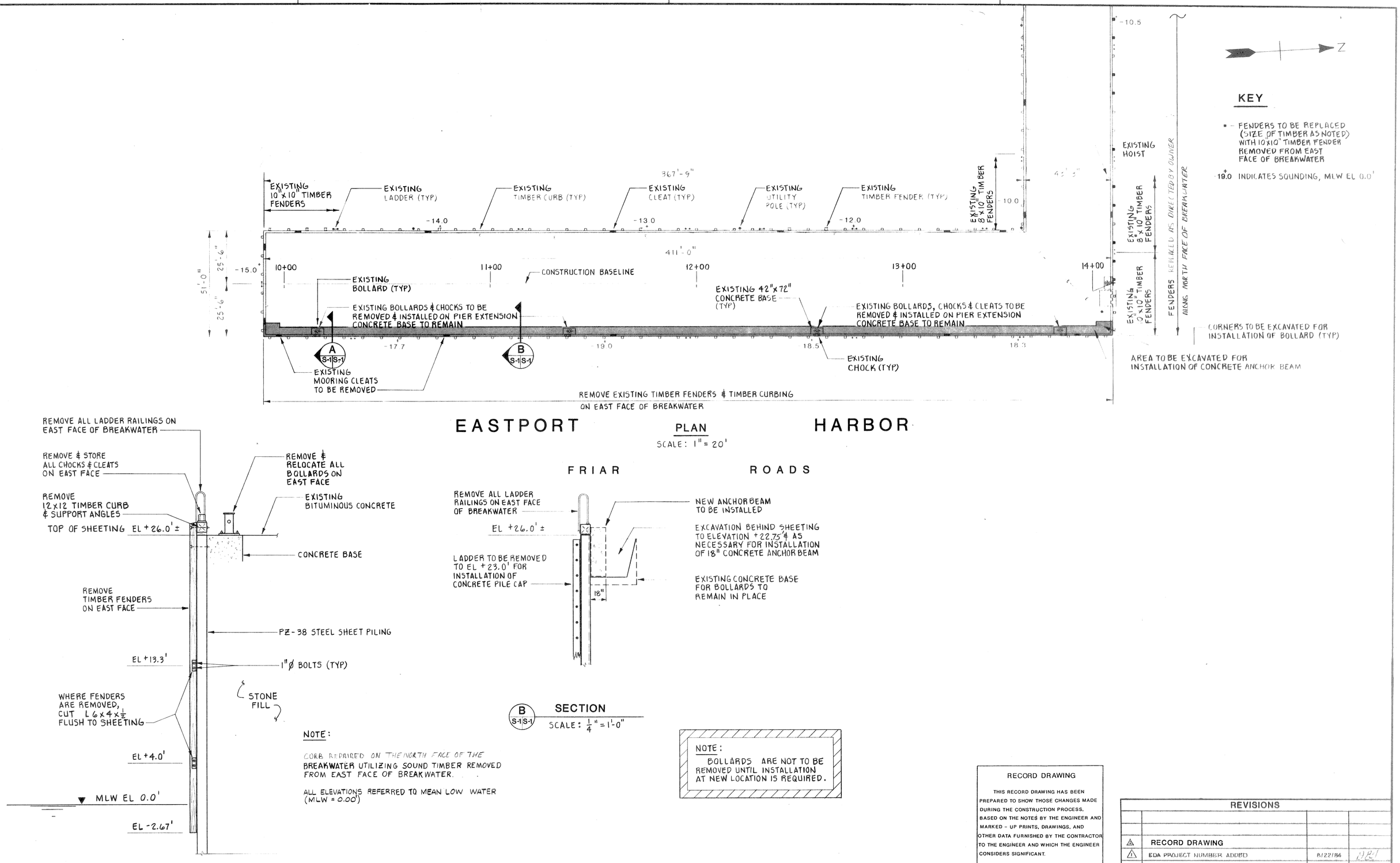

NOTE:

CORB REPAIRED ON THE NORTH FACE OF THE BREAKWATER UTILIZING SOUND TIMBER REMOVED FROM EAST FACE OF BREAKWATER.

ALL ELEVATIONS REFERRED TO MEAN LOW WATER (MLW = 0.00')

NOTE:

BOLLARDS ARE NOT TO BE REMOVED UNTIL INSTALLATION AT NEW LOCATION IS REQUIRED.

RECORD DRAWING

THIS RECORD DRAWING HAS BEEN PREPARED TO SHOW THOSE CHANGES MADE DURING THE CONSTRUCTION PROCESS, BASED ON THE NOTES BY THE ENGINEER AND MARKED - UP PRINTS, DRAWINGS, AND OTHER DATA FURNISHED BY THE CONTRACTOR TO THE ENGINEER AND WHICH THE ENGINEER CONSIDERS SIGNIFICANT.

REVISIONS			
△	RECORD DRAWING		
△	EDA PROJECT NUMBER ADDED	8/22/84	[illegible]
NO.	DESCRIPTION	DATE	APPD

SCALE: AS NOTED
DATE: AUGUST 1985
DRAWN BY: CEM
CHECKED BY: JPM

STATE OF MAINE — REGISTERED PROFESSIONAL ENGINEER

MORRISON GEOTECHNICAL ENGINEERING
WINSLOW, MAINE 04902

REG. PROF. ENG. NO 2464 DATE

EASTPORT PORT AUTHORITY
△ EDA NO. 01-01-02573
BREAKWATER REHABILITATION PROJECT
CONTRACT NO. 83-2
PORT OF EASTPORT
DEMOLITION & EXCAVATION

SHEET NO. S-1 OF 11
MGE JOB NO. 1808
GEC JOB NO. 543-83

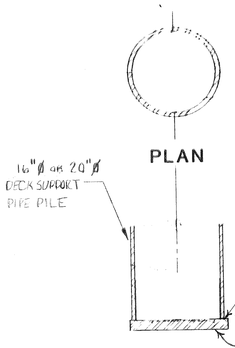

PLAN

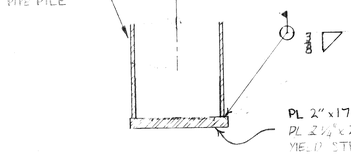

SECTION

PIPE PILE TIP – TYPE 1

SCALE: $\frac{3}{4}$"=1'-0"

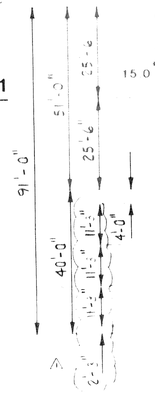

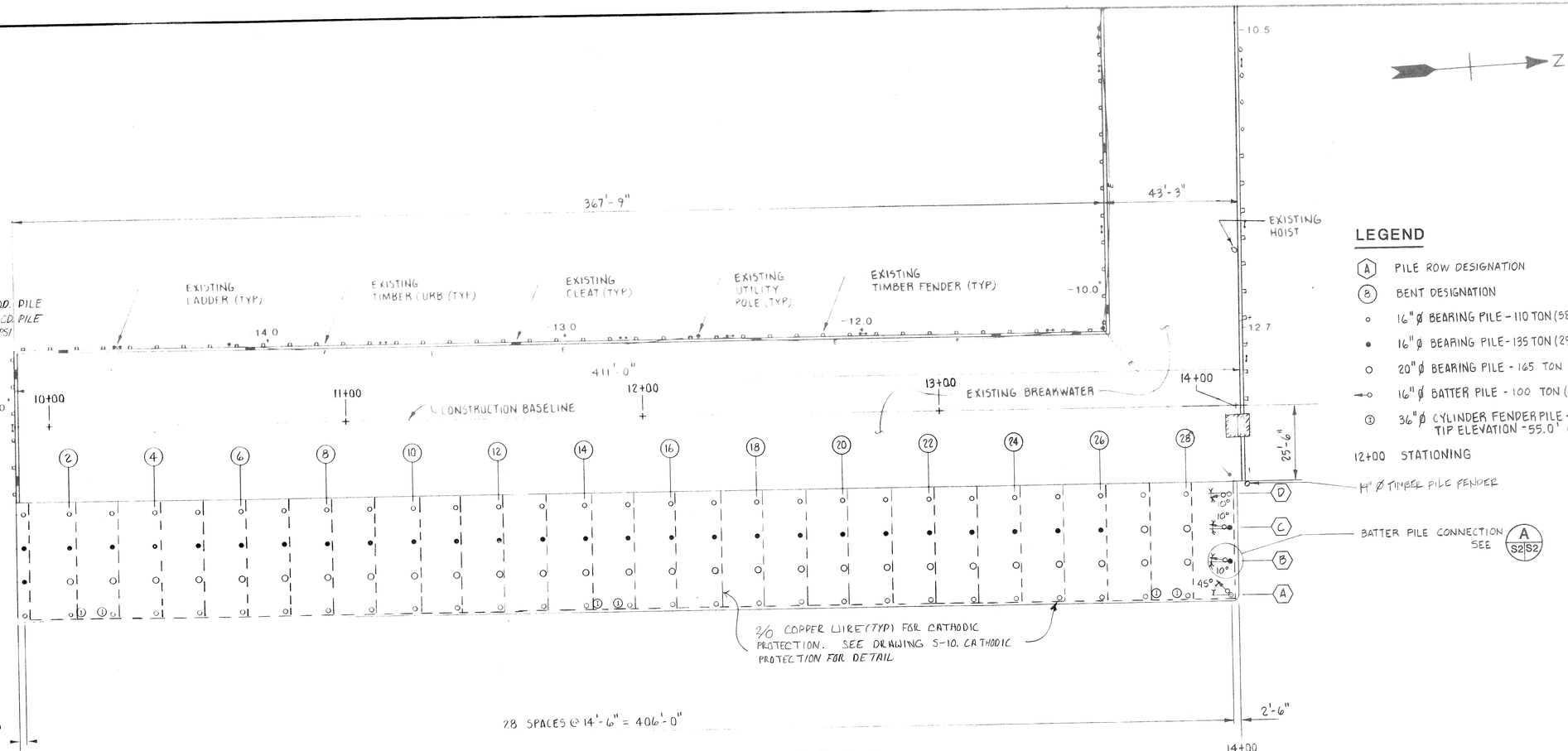

LEGEND

- (A) PILE ROW DESIGNATION
- (8) BENT DESIGNATION
- ○ 16"ø BEARING PILE – 110 TON (58 TOTAL)
- ● 16"ø BEARING PILE – 135 TON (29 TOTAL)
- ○ 20"ø BEARING PILE – 165 TON (29 TOTAL)
- ⊸○ 16"ø BATTER PILE – 100 TON (4 TOTAL)
- ① 36"ø CYLINDER FENDER PILE – TIP ELEVATION -55.0' (6 TOTAL)
- 12+00 STATIONING

EASTPORT FRIAR HARBOR ROADS

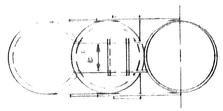

PLAN

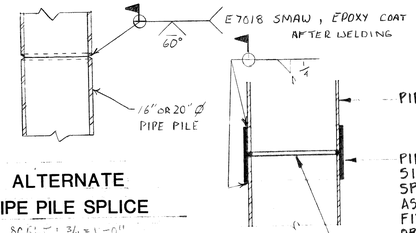

ALTERNATE
PIPE PILE SPLICE
SCALE: 3/4"=1'-0"

SECTION

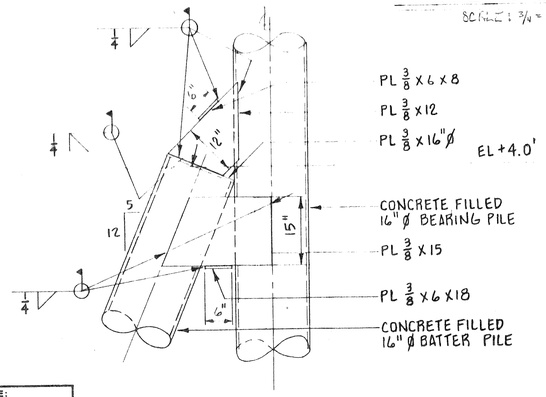

ELEVATION

A S2|S2 BATTER PILE CONNECTION
SCALE: $\frac{3}{4}$"=1'-0"

PIPE PILE SPLICE
SCALE: $\frac{3}{4}$"=1'-0"

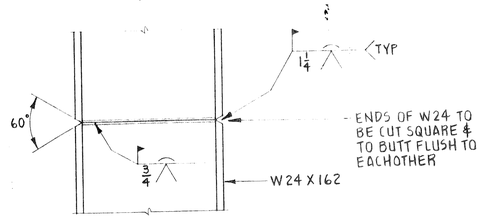

ELEVATION

W 24 X 162 – SPLICE
SCALE: 1"=1'-0"

PLAN
SCALE: 1"=20'

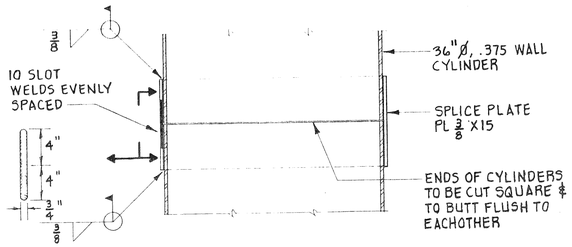

SECTION

36"ø CYLINDER SPLICE
SCALE: 1"=1'-0"

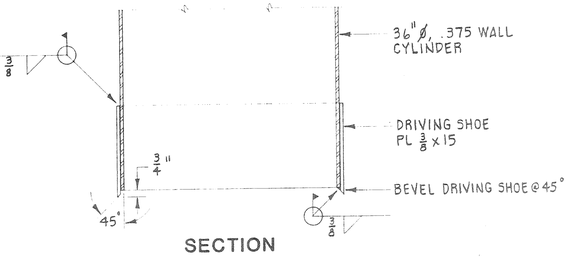

SECTION

36"ø CYLINDER – DRIVING SHOE
SCALE: 1"=1'-0"

RECORD DRAWING

THIS RECORD DRAWING HAS BEEN PREPARED TO SHOW THOSE CHANGES MADE DURING THE CONSTRUCTION PROCESS, BASED ON THE NOTES BY THE ENGINEER AND MARKED - UP PRINTS, DRAWINGS, AND OTHER DATA FURNISHED BY THE CONTRACTOR TO THE ENGINEER AND WHICH THE ENGINEER CONSIDERS SIGNIFICANT.

REVISIONS			
3			
2	RECORD DRAWING C.O. 13, 1808-004, 008, 026, 049, 090		
1	REVISED PILE LAYOUT DIMENSIONS	8/23/84	BBJ
NO.	DESCRIPTION	DATE	APPD

SCALE:	AS NOTED
DATE:	AUGUST 1985
DRAWN BY:	CEM
CHECKED BY:	JPM

STATE OF MAINE — REGISTERED PROFESSIONAL ENGINEER

MORRISON GEOTECHNICAL ENGINEERING
WINSLOW, MAINE 04902

REG. PROF. ENG. NO. 2464 DATE

EASTPORT PORT AUTHORITY
EDA NO. 01-01-02573
BREAKWATER REHABILITATION PROJECT
CONTRACT NO. 83-2
PORT OF EASTPORT
PILE PLAN

SHEET NO. S-2 OF 11
MGE JOB NO. 1808
CEC JOB NO. 543-83

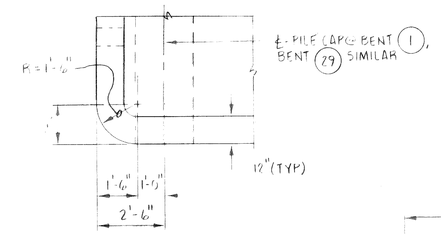

PLAN

(A S3|S3) DETAIL - DECK CORNER

SCALE: $\frac{3}{8}$"=1'-0"

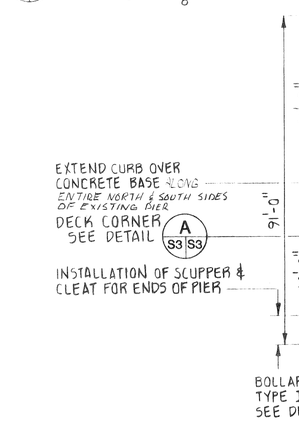

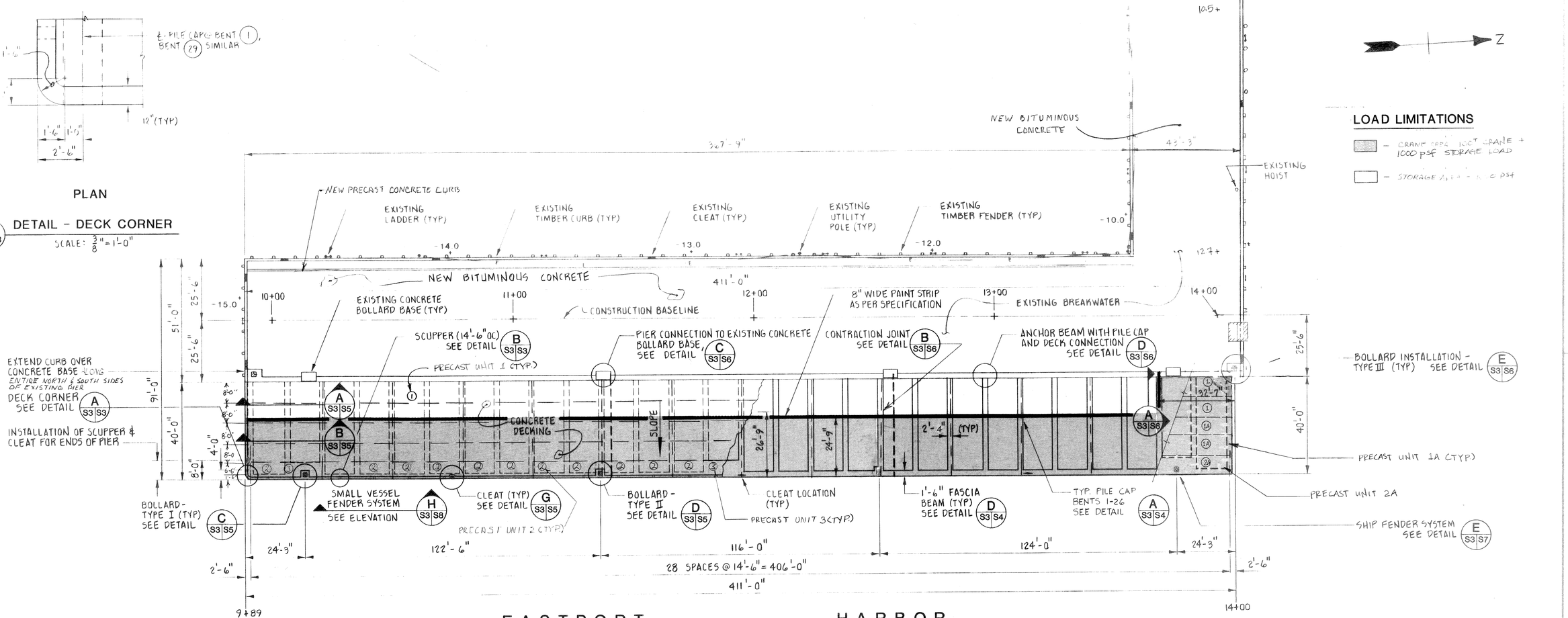

LOAD LIMITATIONS

- ▒ – CRANE OPER. 100T CRANE + 1000 PSF STORAGE LOAD
- □ – STORAGE AREA = 1000 PSF

EASTPORT HARBOR

FRIAR ROADS

PLAN

SCALE: 1" = 20'

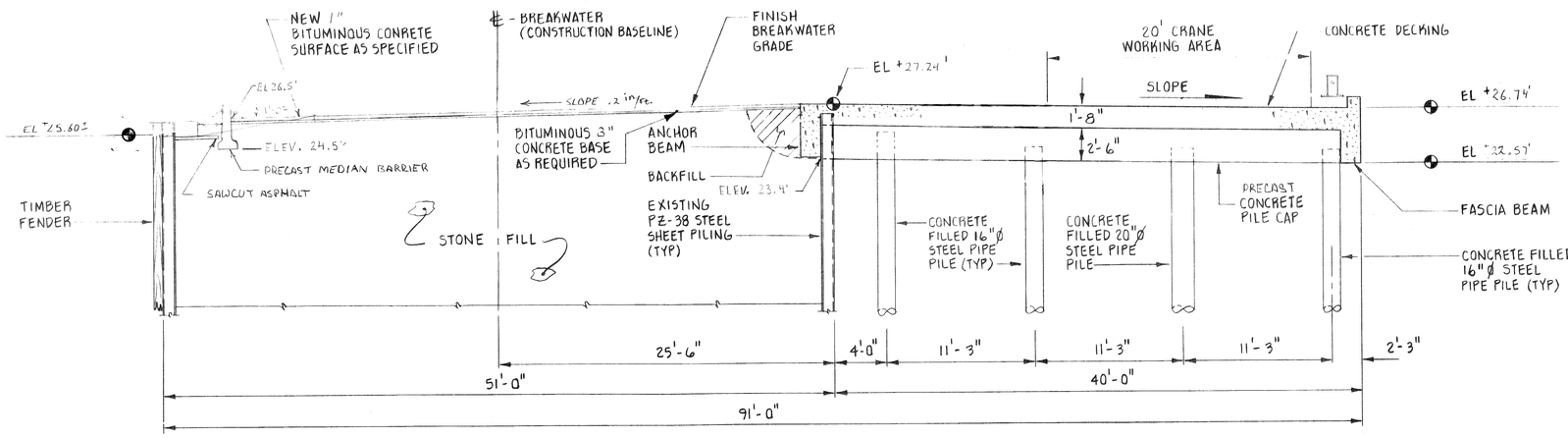

TYPICAL CROSS-SECTION

(BENTS (1) THRU (26))

SCALE: $\frac{3}{16}$"=1'-0"

NOTE:
SCUPPERS LOCATED AT MIDPOINT BETWEEN PILE CAPS.

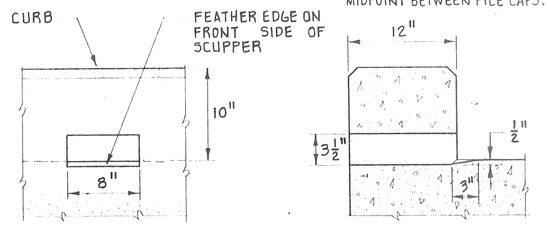

ELEVATION SECTION

(B S3|S5) (B S3|S3) DETAIL - SCUPPER

SCALE: 1½"=1'-0"

RECORD DRAWING

THIS RECORD DRAWING HAS BEEN PREPARED TO SHOW THOSE CHANGES MADE DURING THE CONSTRUCTION PROCESS, BASED ON THE NOTES BY THE ENGINEER AND MARKED - UP PRINTS, DRAWINGS, AND OTHER DATA FURNISHED BY THE CONTRACTOR TO THE ENGINEER AND WHICH THE ENGINEER CONSIDERS SIGNIFICANT.

REVISIONS			
2	RECORD DRAWING 1808-013A,076A,CO.4,CO.6		
1	EDA PROJECT NUMBER ADDED	8/22/84	889
NO.	DESCRIPTION	DATE	APPD

SCALE:	AS NOTED
DATE:	AUGUST 1985
DRAWN BY:	CEM
CHECKED BY:	JPM

STRUCTURAL ENGINEER EDWARD P. MORRISON No 3604 REGISTERED PROFESSIONAL ENGINEER

MORRISON GEOTECHNICAL ENGINEERING
WINSLOW, MAINE 04902

REG. PROF. ENG. NO. 2464 DATE 8/13/84

EASTPORT PORT AUTHORITY
EDA NO. 01-01-02573
BREAKWATER REHABILITATION PROJECT
CONTRACT NO. 83-2
PORT OF EASTPORT
DECKING / PILE CAP PLAN

SHEET NO. S-3 OF 11
MGE JOB NO. 1808
CEC JOB NO. 543-83

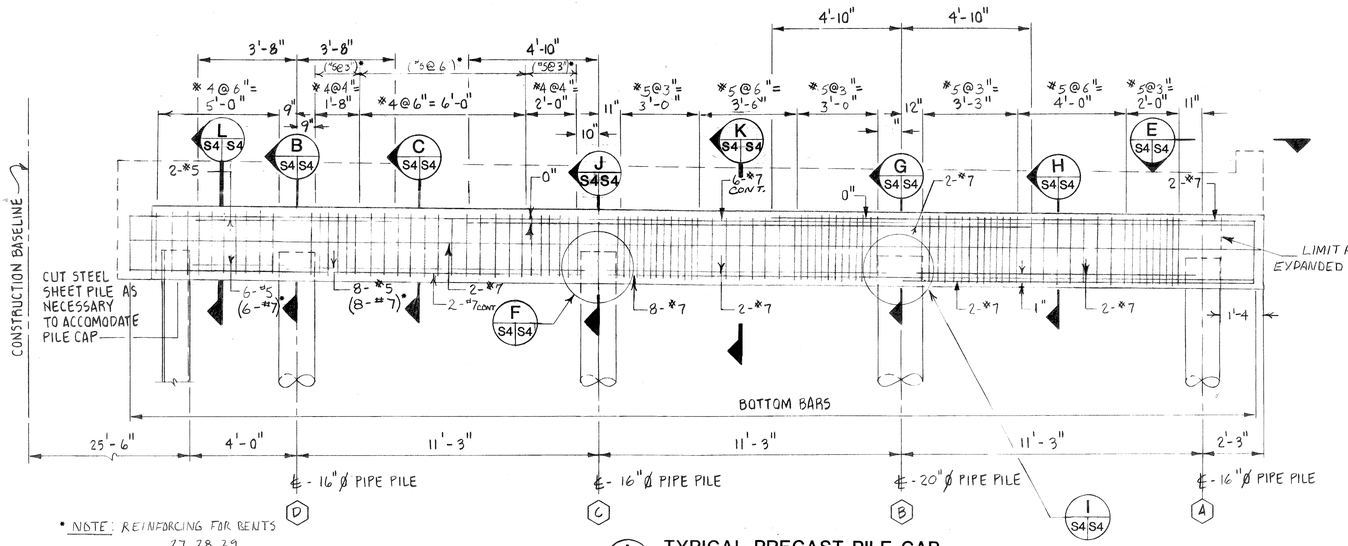

* NOTE: REINFORCING FOR BENTS 27, 28, 29

A S3|S4 **TYPICAL PRECAST PILE CAP**
SCALE: $\frac{3}{8}$" = 1'-0"

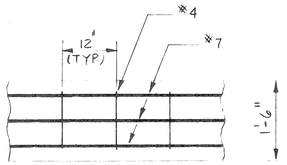

PLAN

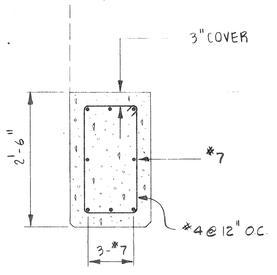

SECTION

D S3|S4 **DETAIL – FASCIA BEAM**
SCALE: $\frac{3}{4}$" = 1'-0"

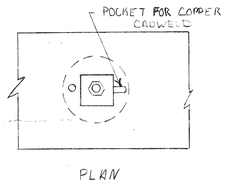

PLAN

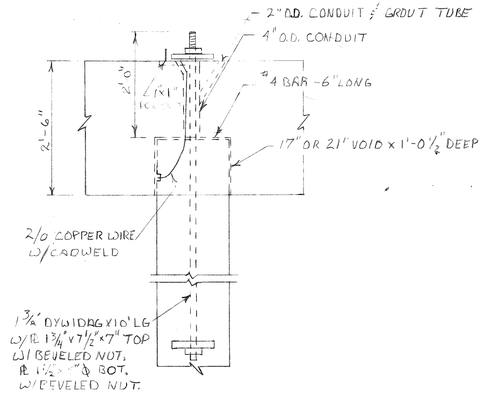

F S4|S4 **PILE – PILE CAP CONECTION DETAIL**
SCALE: $\frac{3}{4}$" = 1'-0"

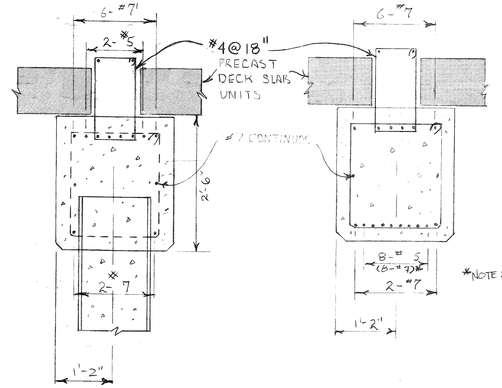

B S4|S4 **SECTION**
SCALE: $\frac{3}{4}$" = 1'-0"

C S4|S4 **SECTION**
SCALE: $\frac{3}{4}$" = 1'-0"

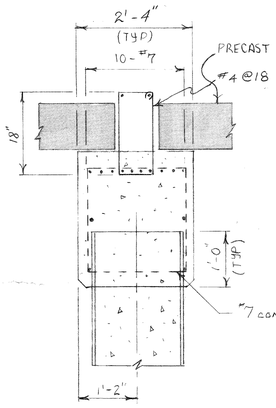

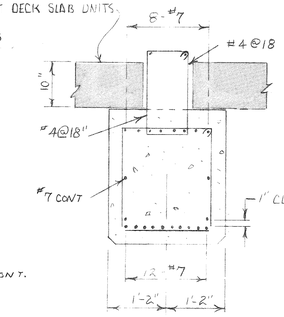

G S4|S4 **SECTION**
SCALE: $\frac{3}{4}$" = 1'-0"

H S4|S4 **SECTION**
SCALE: $\frac{3}{4}$" = 1'-0"

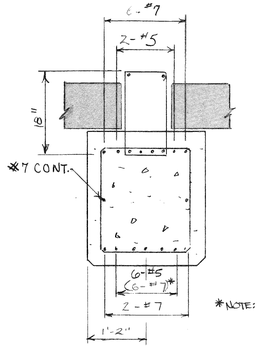

*NOTE: REINFORCING FOR BENTS 27, 28, 29

L S4|S4 **SECTION**
SCALE: $\frac{3}{4}$" = 1'-0"

*NOTE: REINFORCING FOR BENTS 27, 28, 29

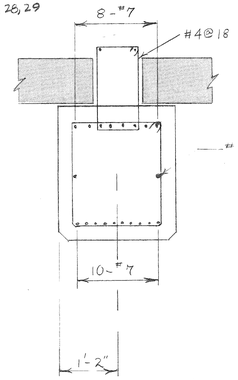

K S4|S4 **SECTION**
SCALE: $\frac{3}{4}$" = 1'-0"

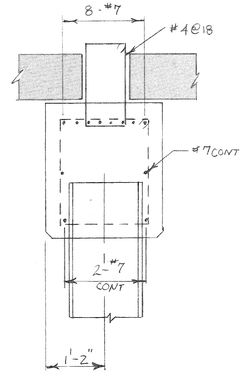

J S4|S4 **SECTION**
SCALE: $\frac{3}{4}$" = 1'-0"

GENERAL CONCRETE NOTES:

1. ALL CAST IN PLACE CONCRETE SHALL HAVE AN ULTIMATE STRENGTH OF 4000 PSI AT 28 DAYS
2. ALL PRECAST PILE CAP CONCRETE SHALL HAVE AN ULTIMATE STRENGTH OF 5000 PSI AT 28 DAYS
3. MINIMUM CONCRETE COVERAGE OVER REINFORCING SHALL BE 3".
4. REINFORCING SHALL CONFORM TO ASTM A-615 GRADE 60.
5. SPLICING OF REINFORCING:
   - #6 & SMALLER – 34 BAR DIAMETERS
   - #7 & LARGER – 40 BAR DIAMETERS
6. CHAMFER ALL EXPOSED EDGES $\frac{3}{4}$" @ 45°.

RECORD DRAWING

THIS RECORD DRAWING HAS BEEN PREPARED TO SHOW THOSE CHANGES MADE DURING THE CONSTRUCTION PROCESS, BASED ON THE NOTES BY THE ENGINEER AND MARKED – UP PRINTS, DRAWINGS, AND OTHER DATA FURNISHED BY THE CONTRACTOR TO THE ENGINEER AND WHICH THE ENGINEER CONSIDERS SIGNIFICANT.

REVISIONS			
2	RECORD DRAWING 1808-015A,016A		
1	EDA PROJECT NUMBER ADDED	8/22/84	
NO.	DESCRIPTION	DATE	APPD

SCALE:	AS NOTED
DATE:	AUGUST 1985
DRAWN BY:	CEM
CHECKED BY:	JPM

STATE OF MAINE — EDWARD B. MORRISON No 2464 — REGISTERED PROFESSIONAL ENGINEER

MORRISON GEOTECHNICAL ENGINEERING
WINSLOW, MAINE 04902

REG. PROF. ENG. NO. 2464 DATE 3/12/85

EASTPORT PORT AUTHORITY
EDA NO. 01-01-02573
BREAKWATER REHABILITATION PROJECT
CONTRACT NO. 83-2
PORT OF EASTPORT
PILE CAP – REINFORCING DETAILS

SHEET NO. S-4 OF 11
MGE JOB NO. 1808
CEC JOB NO. 543-83

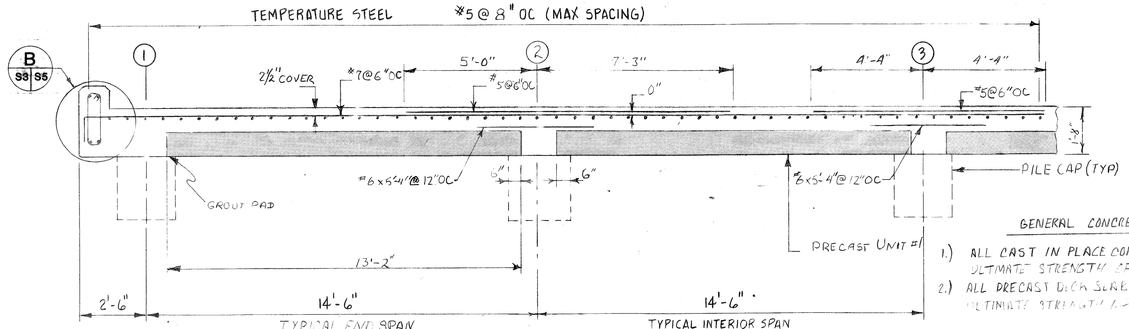

A S3 S5 **SECTION – DECK SLAB**

SCALE: $\frac{3}{8}$"=1'-0"

GENERAL CONCRETE NOTES

1.) ALL CAST IN PLACE CONCRETE SHALL HAVE AN ULTIMATE STRENGTH OF 4000 PSI @ 28 DAYS
2.) ALL PRECAST DECK SLAB CONCRETE SHALL HAVE AN ULTIMATE STRENGTH OF 5000 PSI @ 28 DAYS
3.) MINIMUM CONCRETE COVERAGE OVER REINFORCING SHALL BE 3".
4.) REINFORCING SHALL CONFORM TO ASTM A-615 GRADE 60.
5.) SPLICING OF REINFORCING:
- #6 & SMALLER – 34 BAR DIAMETERS
- #7 & LARGER – 40 BAR DIAMETERS

6.) CHAMFER ALL EXPOSED EDGES $\frac{3}{4}$" @ 45°.
7.) SLAB SHALL BE PLACED IN SECTIONS NOT EXCEEDING 2000 SQUARE FEET.

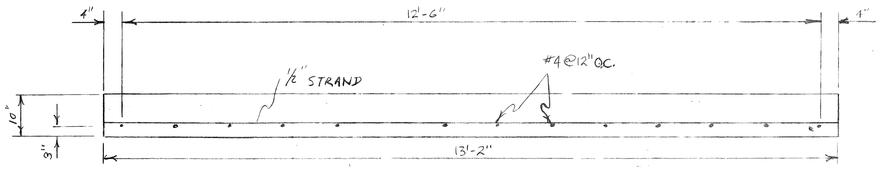

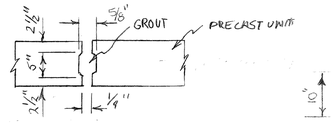

SECTION

JOINT BETWEEN PRECAST UNITS

SCALE: $\frac{3}{4}$"=1'-0"

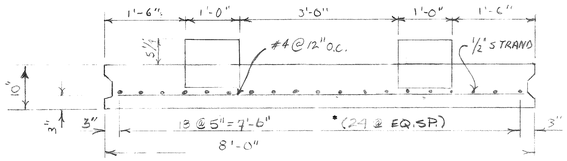

UNIT 1
UNIT 1A

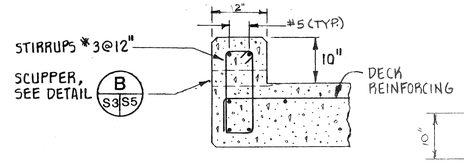

E S5 S5 **CURB DETAIL**

SCALE: $\frac{3}{4}$"=1'-0"

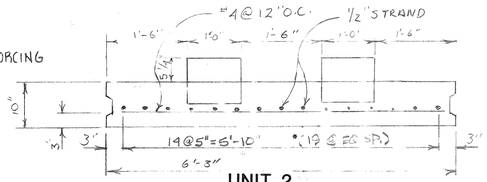

UNIT 2
UNIT 2A

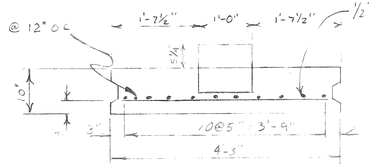

UNIT 3

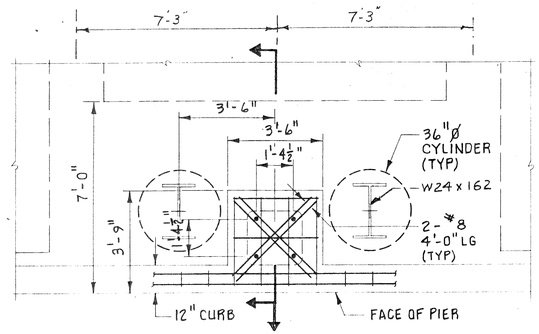

PLAN

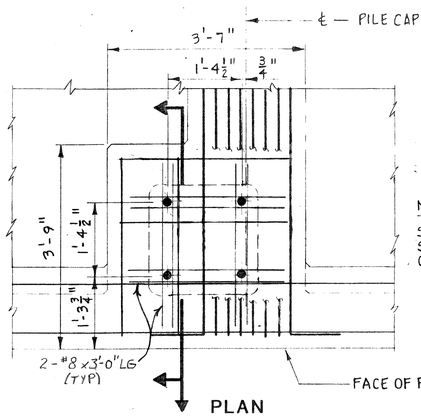

PLAN

NOTE:
STIRRUPS NOT SHOWN FOR CLARITY.

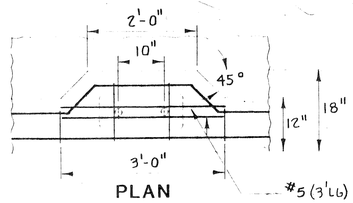

PLAN

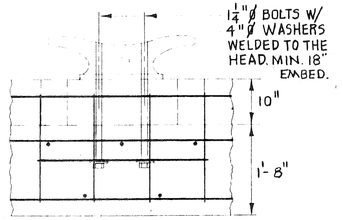

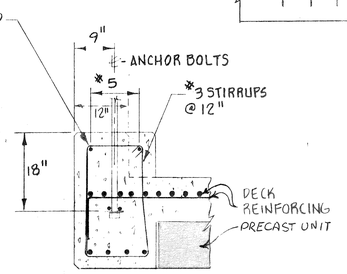

G S3 S5 **DETAIL – CLEAT ANCHOR**

SCALE: $\frac{3}{4}$"=1'-0"

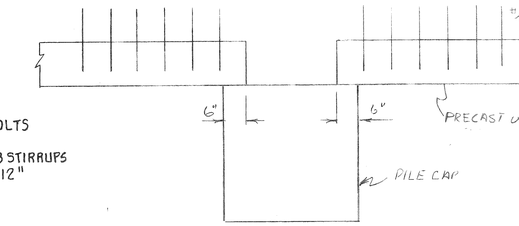

SECTION

PRECAST DECK SLAB

SCALE: $\frac{3}{4}$"=1'-0"

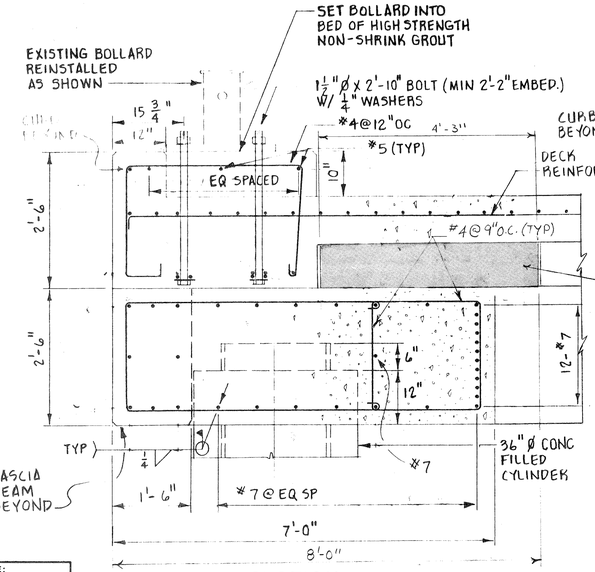

SECTION

C S3 S5 **BOLLARD INSTALLATION – TYPE I**

SCALE: $\frac{3}{4}$"=1'-0"

FENDER BEAM INSTALLATION

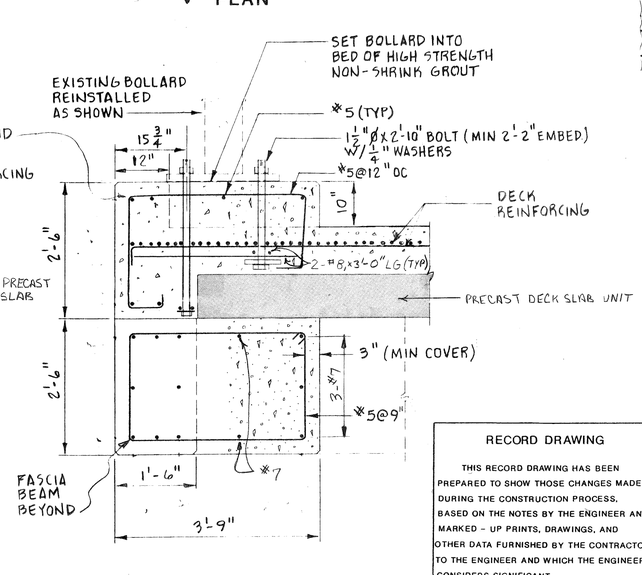

SECTION

D S3 S5 **BOLLARD INSTALLATION – TYPE II**

SCALE: $\frac{3}{4}$"=1'-0"

RECORD DRAWING

THIS RECORD DRAWING HAS BEEN PREPARED TO SHOW THOSE CHANGES MADE DURING THE CONSTRUCTION PROCESS, BASED ON THE NOTES BY THE ENGINEER AND MARKED – UP PRINTS, DRAWINGS, AND OTHER DATA FURNISHED BY THE CONTRACTOR TO THE ENGINEER AND WHICH THE ENGINEER CONSIDERS SIGNIFICANT.

REVISIONS			
2	RECORD DRAWING 1808-013A,014A,016A, 017A 039,040,041,012,078		
1	EDA PROJECT NUMBER ADDED	8/22/84	
NO.	DESCRIPTION	DATE	APPD

SCALE:	AS NOTED
DATE:	AUGUST 1985
DRAWN BY:	CEM
CHECKED BY:	JPM

STATE OF MAINE EDWARD B MORRISON NO 2464 REGISTERED PROFESSIONAL ENGINEER

MORRISON GEOTECHNICAL ENGINEERING
WINSLOW, MAINE 04902

REG. PROF. ENG. NO. 2464 DATE 8/31/84

EASTPORT PORT AUTHORITY
EDA NO. 01-01-02573
BREAKWATER REHABILITATION PROJECT
CONTRACT NO. 83-2
PORT OF EASTPORT
DECKING DETAILS

SHEET NO. S-5 OF 11
MGE JOB NO. 1808
CEC JOB NO. 543-83

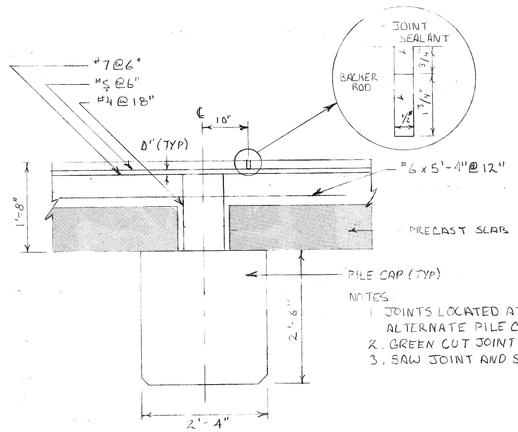

NOTES:
1. JOINTS LOCATED AT ALTERNATE PILE CAPS (29'-0" OC)
2. GREEN CUT JOINT
3. SAW JOINT AND SEAL

B S3 S6 **CONTRACTION JOINT**

SCALE: 3/4" = 1'-0"

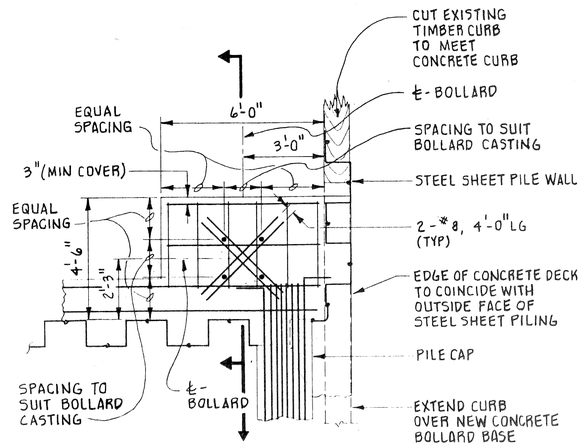

PLAN

SCALE: 3/8" = 1'-0"

GENERAL CONCRETE NOTES

1.) ALL CAST IN PLACE CONCRETE SHALL HAVE AN ULTIMATE STRENGTH OF 4000 PSI @ 28 DAYS.

2.) MINIMUM CONCRETE COVERAGE OVER REINFORCING SHALL BE 3".

3.) REINFORCING SHALL CONFORM TO ASTM A-615 GRADE 60.

4.) SPLICING OF REINFORCING:
- #6 & SMALLER - 34 BAR DIAMETERS
- #7 & LARGER - 40 BAR DIAMETERS

5.) CHAMFER ALL EXPOSED EDGES 3/4" @ 45°.

6.) SLAB SHALL BE PLACED IN SECTIONS NOT EXCEEDING 2000 SQUARE FEET.

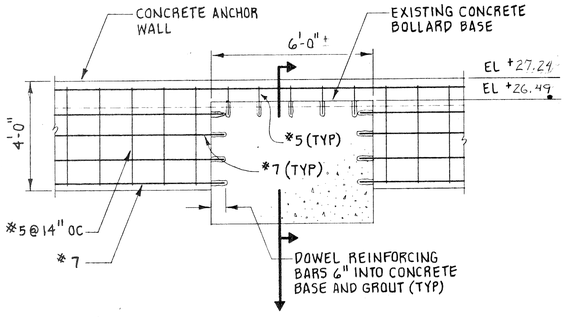

ELEVATION

SCALE: 3/8" = 1'-0"

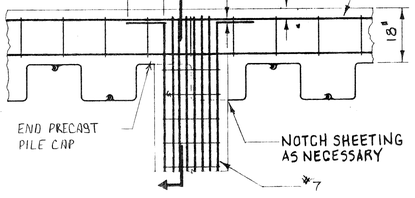

PLAN

SCALE: 1/2" = 1'-0"

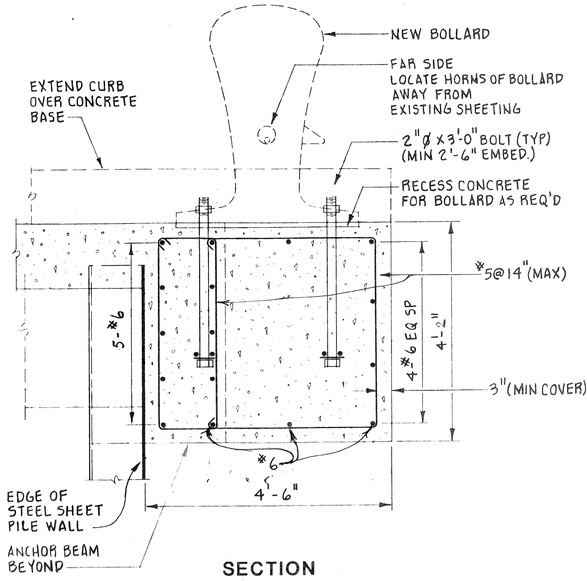

SECTION

E S3 S6 **DETAIL - BOLLARD INSTALLATION TYPE III**

SCALE: 3/4" = 1'-0"

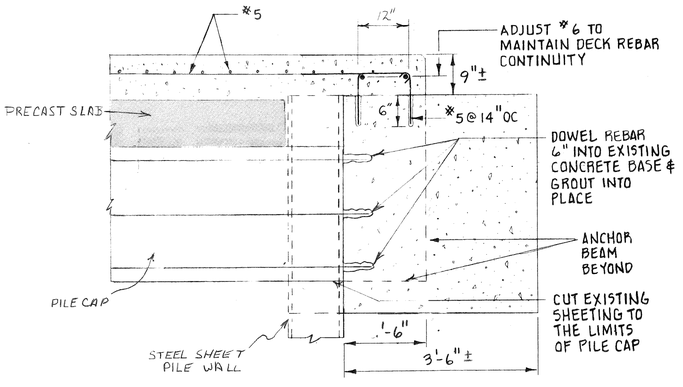

SECTION

PIER CONNECTION TO

C S3 S6 **DETAIL - EXISTING CONCRETE BOLLARD BASE**

SCALE: 3/4" = 1'-0"

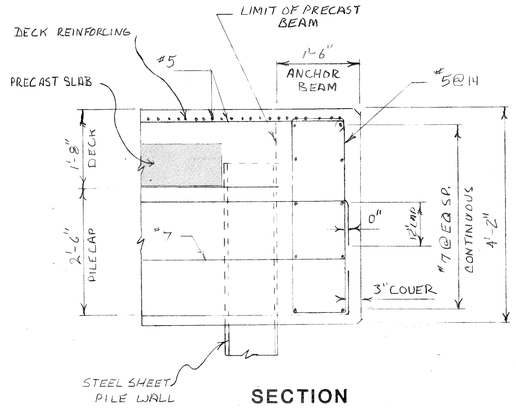

SECTION

D S3 S6 **DETAIL - ANCHOR BEAM WITH PILE CAP & DECK CONNECTION**

SCALE: 3/4" = 1'-0"

RECORD DRAWING

THIS RECORD DRAWING HAS BEEN PREPARED TO SHOW THOSE CHANGES MADE DURING THE CONSTRUCTION PROCESS, BASED ON THE NOTES BY THE ENGINEER AND MARKED - UP PRINTS, DRAWINGS, AND OTHER DATA FURNISHED BY THE CONTRACTOR TO THE ENGINEER AND WHICH THE ENGINEER CONSIDERS SIGNIFICANT.

REVISIONS			
3	RECORD DRAWING 1808-016A,018A,066		
2	EDA PROJECT NUMBER ADDED	8122184	DRJ
NO.	DESCRIPTION	DATE	APPD

SCALE:	AS NOTED
DATE:	AUGUST 1985
DRAWN BY:	CEM
CHECKED BY:	JPM

STATE OF MAINE EDWARD B. MORRISON No. 2464 REGISTERED PROFESSIONAL ENGINEER

MORRISON GEOTECHNICAL ENGINEERING
WINSLOW, MAINE 04902

REG. PROF. ENG. NO. 2464 DATE

EASTPORT PORT AUTHORITY
EDA NO. 01-01-02573
BREAKWATER REHABILITATION PROJECT
CONTRACT NO. 83-2
PORT OF EASTPORT
CONCRETE DETAILS

SHEET NO. S-6 OF 11
MGE JOB NO. 1808
CEC JOB NO. 543-83

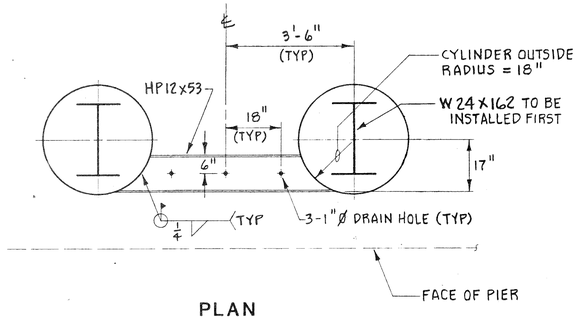

PLAN

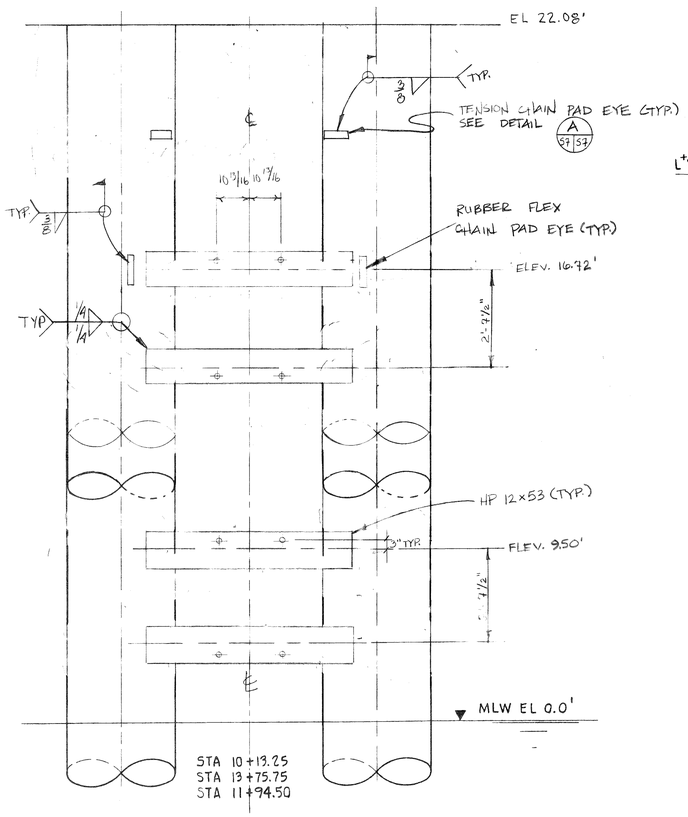

ELEVATION

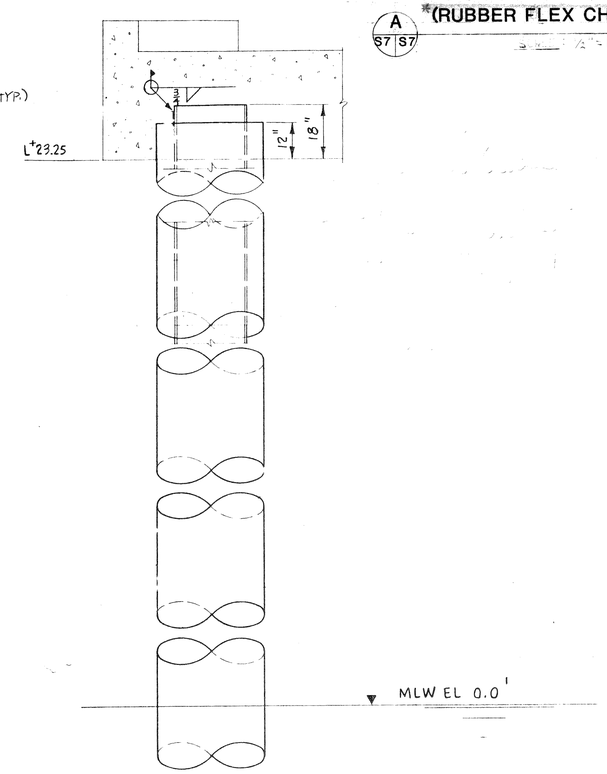

SECTION

D S7 S7 SHIP FENDER SYSTEM
(STA 10+13.25) (STA 11+94.50) (STA 13+75.75)
SCALE: 1/2" = 1'-0"

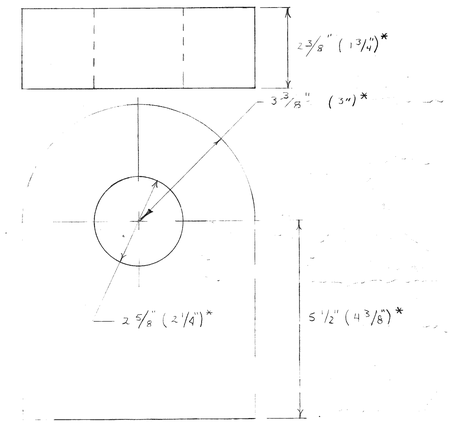

DETAIL - TENSION CHAIN PAD EYE
*(RUBBER FLEX CHAIN PAD EYE)
A S7 S7

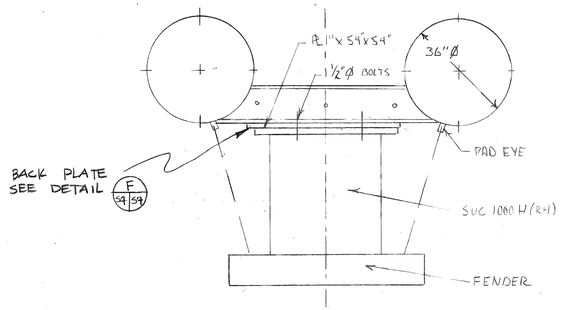

PLAN

FENDER CHAIN INSTALLATION
C S7 S7
SCALE: 3/8" = 1'-0"

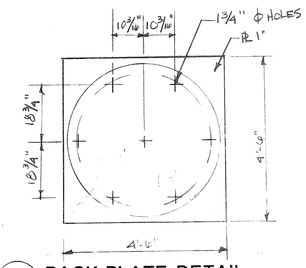

F S7 S7 BACK PLATE DETAIL
SCALE: 1/2" = 1'-0"

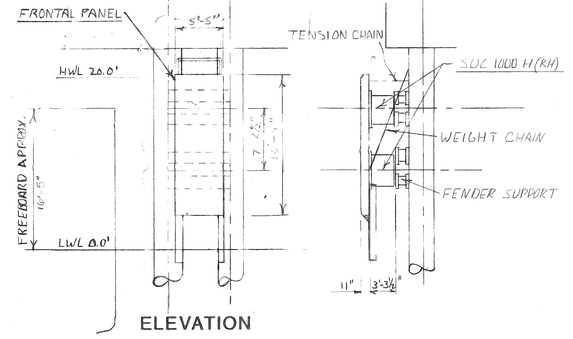

ELEVATION

E S3 S7 SHIP FENDER ASSEMBLY
SCALE: 1/8" = 1'-0"

RECORD DRAWING

THIS RECORD DRAWING HAS BEEN PREPARED TO SHOW THOSE CHANGES MADE DURING THE CONSTRUCTION PROCESS, BASED ON THE NOTES BY THE ENGINEER AND MARKED - UP PRINTS, DRAWINGS, AND OTHER DATA FURNISHED BY THE CONTRACTOR TO THE ENGINEER AND WHICH THE ENGINEER CONSIDERS SIGNIFICANT.

REVISIONS			
3		3/4/86	
2	RECORD DRAWING 1808-029,058 C.O.13, C.O.14		
1	EDA PROJECT NUMBER ADDED	[illegible]	[illegible]
NO.	DESCRIPTION	DATE	APPD

SCALE: AS NOTED
DATE: AUGUST 1985
DRAWN BY: CEM
CHECKED BY: JPM

STATE OF MAINE EDWARD B. MORRISON No 2464 REGISTERED PROFESSIONAL ENGINEER

MORRISON GEOTECHNICAL ENGINEERING
WINSLOW, MAINE 04902

REG. PROF. ENG. NO. 2464 DATE 3/13/86

EASTPORT PORT AUTHORITY
EDA NO. 01-01-02573
BREAKWATER REHABILITATION PROJECT
CONTRACT NO. 83-2
PORT OF EASTPORT
SHIP FENDER SYSTEM

SHEET NO. S-7 OF 11
MGE JOB NO. 1808
CEC JOB NO. 543-83

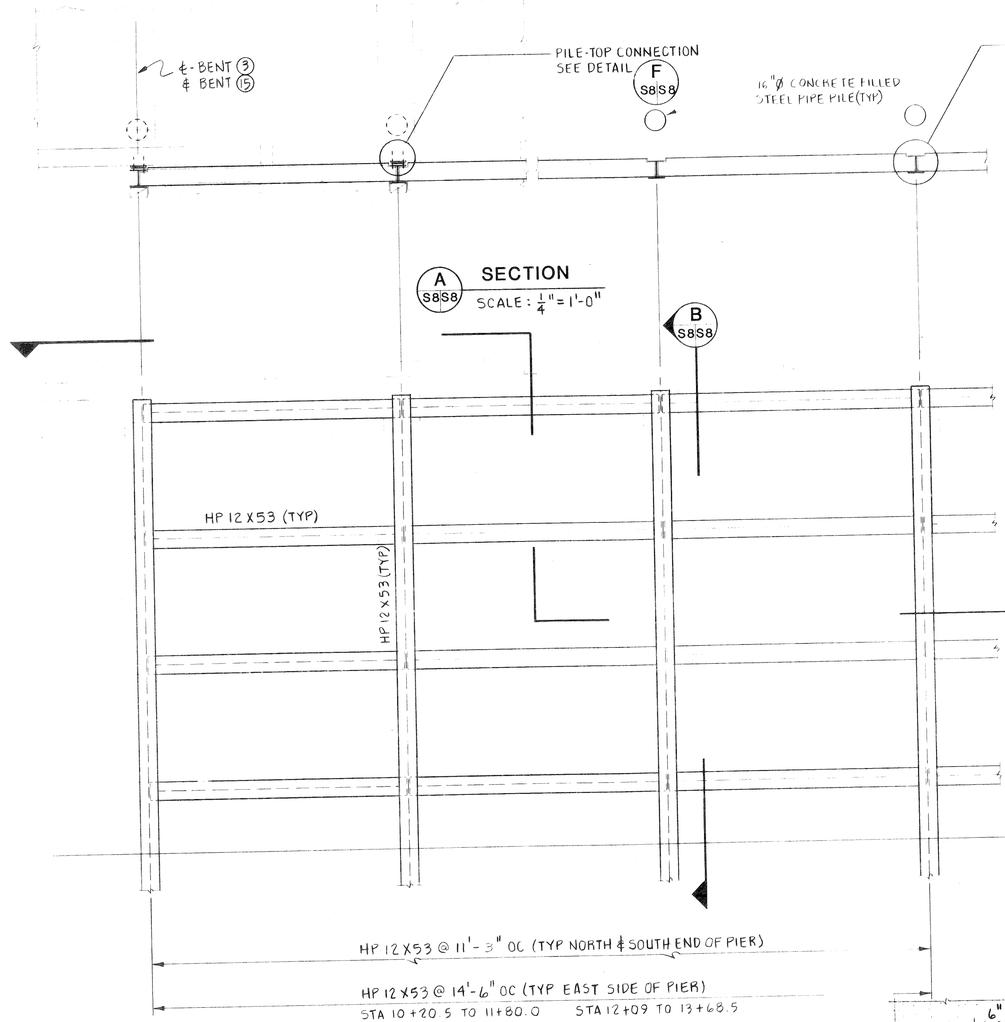

A S8S8 **SECTION**
SCALE: $\frac{1}{4}$"=1'-0"

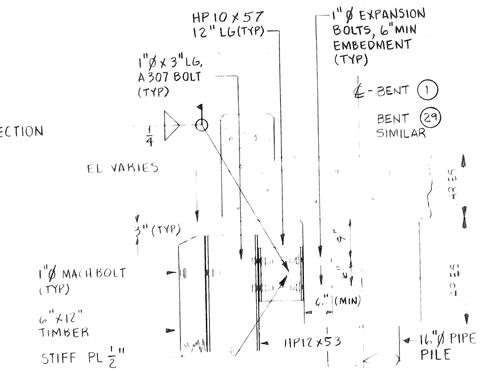

NORTH / SOUTH FENDER SYSTEM
TOP CONNECTION 3/4"=1'-0"

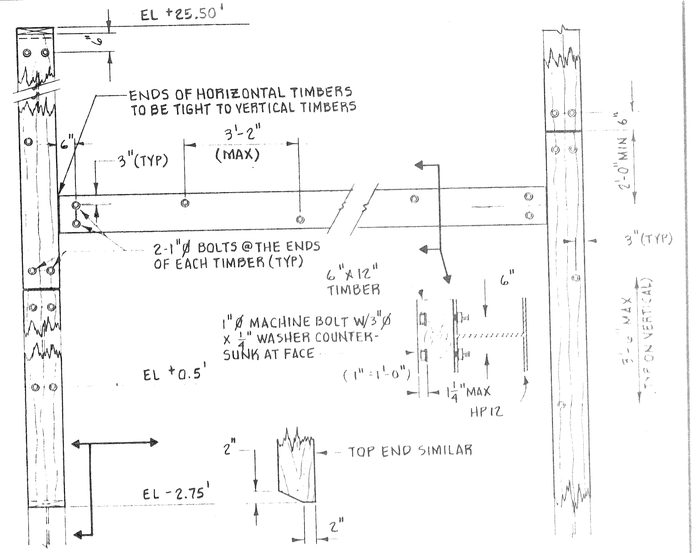

C S8S8 **DETAIL - TIMBER ASSEMBLY**
SCALE: $\frac{1}{2}$"=1'-0"

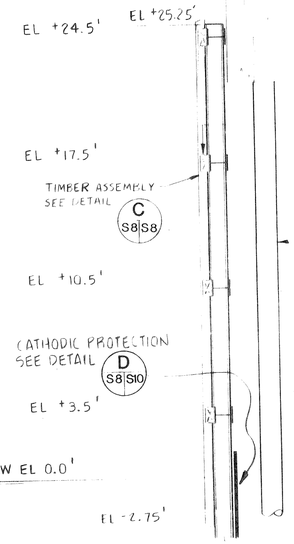

ELEVATION

F S8S8 **DETAIL - PILE TOP CONNECTION AT PIER FACE**
SCALE: 1"=1'-0"

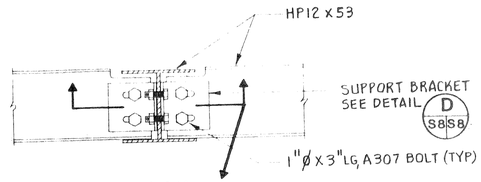

PLAN

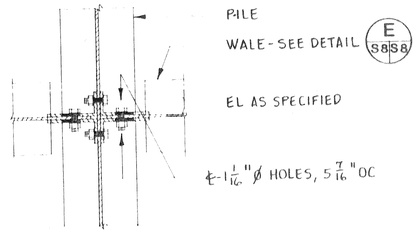

SECTION

G S8S8 **DETAIL - WALE / PILE CONNECTION**
SCALE: 1"=1'-0"

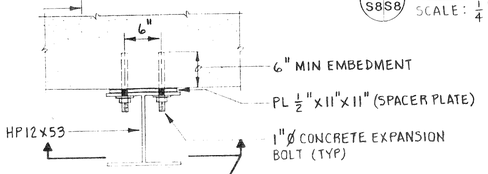

PLAN

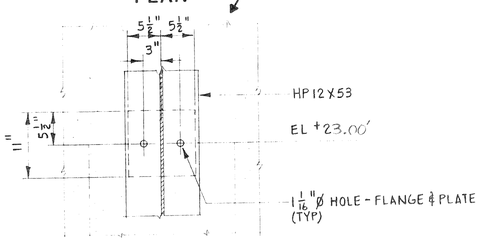

ELEVATION

H S3S8 **ELEVATION**
SCALE: $\frac{1}{4}$"=1'-0"

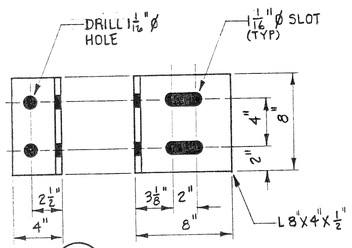

D S8S8 **DETAIL - SUPPORT BRACKET**
SCALE: 2"=1'-0"

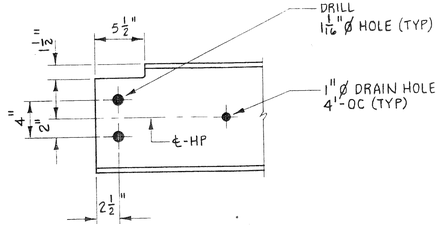

E S8S8 **DETAIL - WALE**
SCALE: $\frac{1}{2}$"=1'-0"

B S8S8 **SECTION**
SCALE: $\frac{1}{4}$"=1'-0"

SCALE:	AS NOTED
DATE:	AUGUST 1985
DRAWN BY:	CEM
CHECKED BY:	JPM

RECORD DRAWING

THIS RECORD DRAWING HAS BEEN PREPARED TO SHOW THOSE CHANGES MADE DURING THE CONSTRUCTION PROCESS, BASED ON THE NOTES BY THE ENGINEER AND MARKED - UP PRINTS, DRAWINGS, AND OTHER DATA FURNISHED BY THE CONTRACTOR TO THE ENGINEER AND WHICH THE ENGINEER CONSIDERS SIGNIFICANT.

NO.	DESCRIPTION	DATE	APPD
3		3/4/86	
2	RECORD DRAWING	8/19/85	
1	EDA PROJECT NUMBER ADDED	8/27/84	

STATE OF MAINE — EDWARD J. MORRISON No. 2464 — REGISTERED PROFESSIONAL ENGINEER

MORRISON GEOTECHNICAL ENGINEERING
WINSLOW, MAINE 04902

REG. PROF. ENG. NO. 2464 DATE 8/13/86

EASTPORT PORT AUTHORITY
EDA NO 01-01-02573
BREAKWATER REHABILITATION PROJECT
CONTRACT NO. 83-2
PORT OF EASTPORT
SMALL VESSEL FENDER SYSTEM

SHEET NO. S-8 OF 11
MGE JOB NO. 1808
DEC JOB NO. 543.83

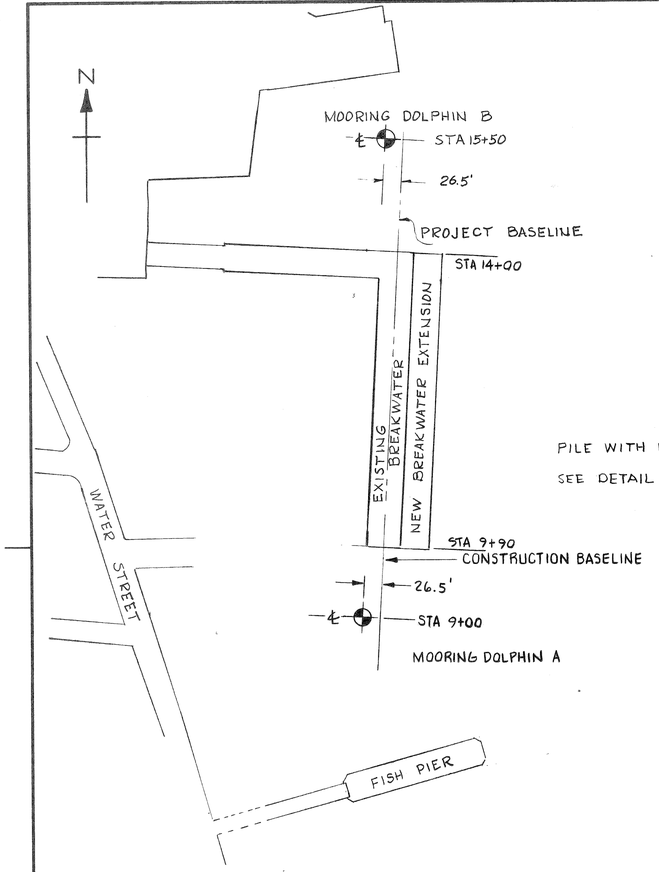

LOCUS
Scale: 1" = 100'

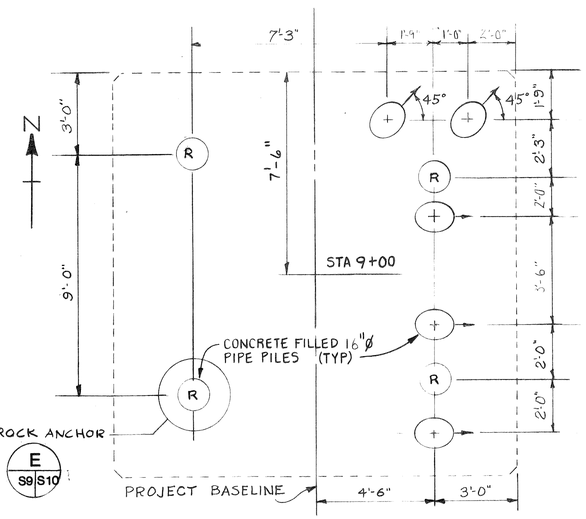

PILE LOCATIONS–DOLPHIN A

PILE LOCATIONS SHOWN AT ELEVATION +15.0

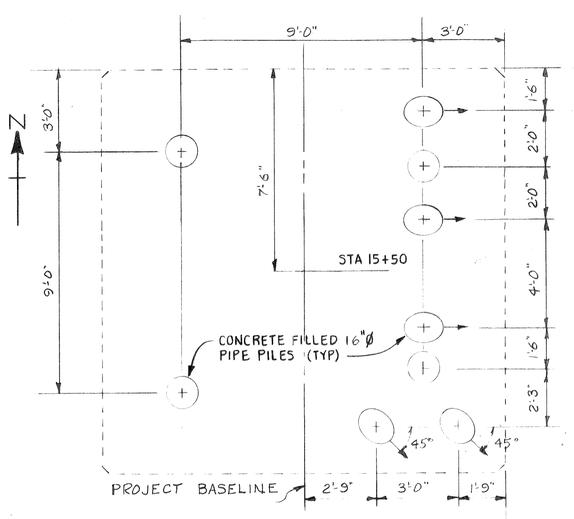

PILE LOCATIONS–DOLPHIN B

PILE LOCATIONS SHOWN AT ELEVATION +15.0

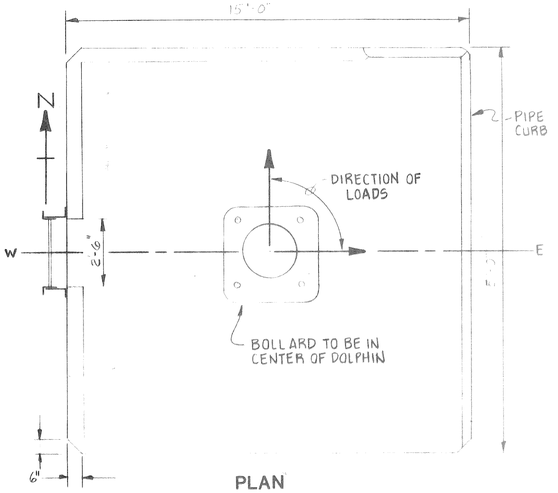

PLAN

DOLPHIN A SHOWN, DOLPHIN B OPPOSITE HAND ABOUT E-W CENTER LINE

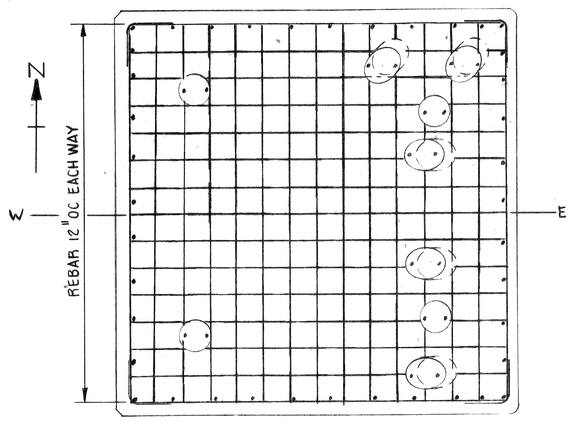

BOTTOM REINFORCING

DOLPHIN A SHOWN, DOLPHIN B OPPOSITE HAND ABOUT E-W CENTER LINE

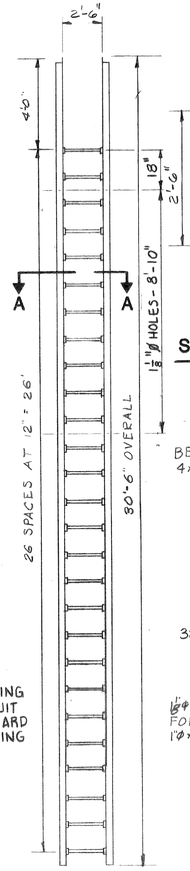

LADDER

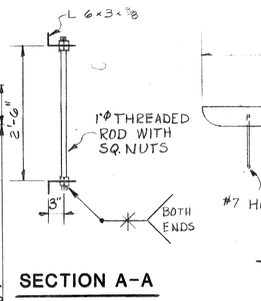

SECTION A-A

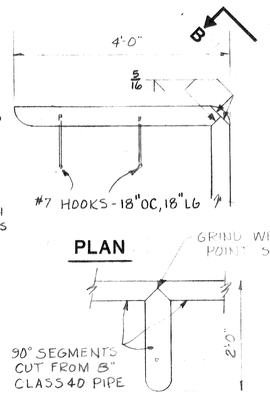

PLAN

SECTION B-B

PIPE CURB DETAILS

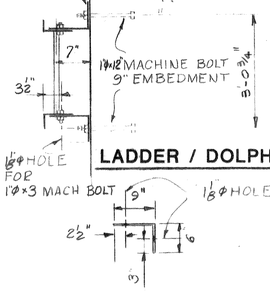

LADDER / DOLPHIN ATTACHMENT DETAIL

BENT BAR DETAIL

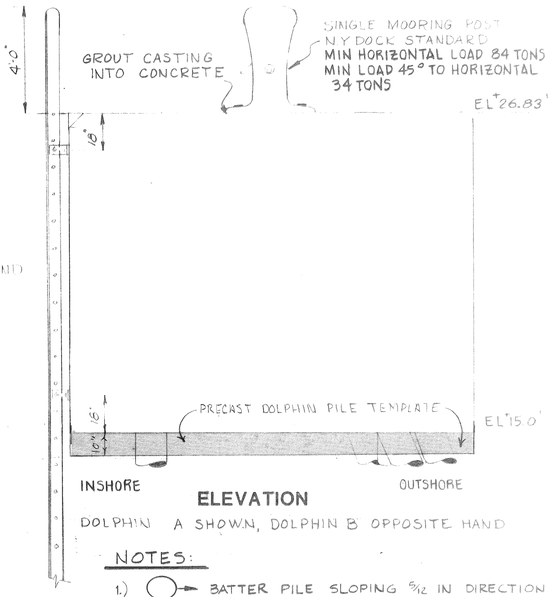

ELEVATION

DOLPHIN A SHOWN, DOLPHIN B OPPOSITE HAND

NOTES:

1.) ○→ BATTER PILE SLOPING 5/12 IN DIRECTION OF ARROW.
2.) ALL REBAR SHOWN TO BE #7.
3.) WHERE PILES INTERFERE WITH REBAR, WELD REBAR TO PILE.
4.) SEE GENERAL CONCRETE NOTES SHEET S-4
5.) ALL PILES EXCEPT THOSE WITH ROCK ANCHORS SHALL HAVE PILE POINTS. SEE PIPE PILE TIP - TYPE 2 DETAIL C S9|S10

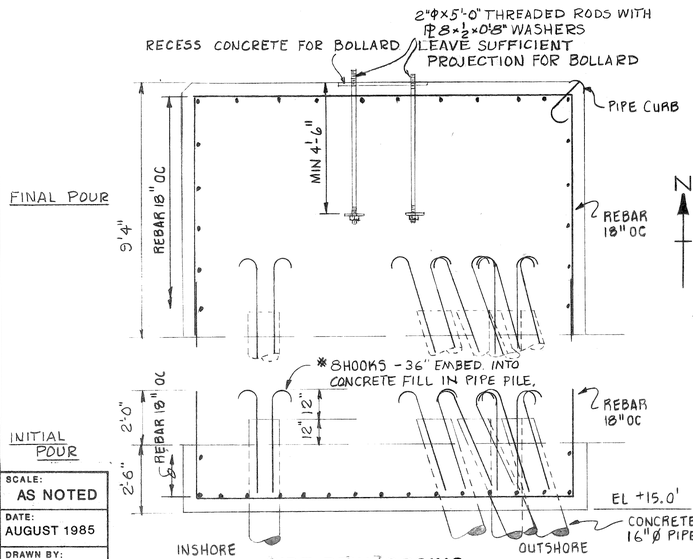

SIDE REINFORCING

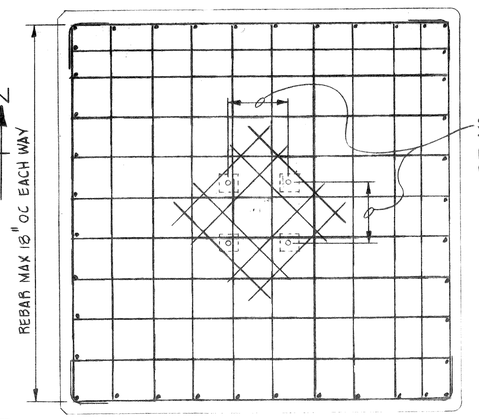

TOP REINFORCING

RECORD DRAWING

THIS RECORD DRAWING HAS BEEN PREPARED TO SHOW THOSE CHANGES MADE DURING THE CONSTRUCTION PROCESS, BASED ON THE NOTES BY THE ENGINEER AND MARKED - UP PRINTS, DRAWINGS, AND OTHER DATA FURNISHED BY THE CONTRACTOR TO THE ENGINEER AND WHICH THE ENGINEER CONSIDERS SIGNIFICANT.

REVISIONS			
2	RECORD DRAWING 1808-006,056,057,062		
1	EDA PROJECT NUMBER ADDED	8/22/84	JPM
NO.	DESCRIPTION	DATE	APPD

STATE OF MAINE — EDWARD B. FOWARD — No. 2464 — REGISTERED PROFESSIONAL ENGINEER

MORRISON GEOTECHNICAL ENGINEERING
WINSLOW, MAINE 04902

Edward B. Foward 7/12/96
REG. PROF. ENG. NO. 2464 DATE

EASTPORT PORT AUTHORITY
2 EDA NO. 01-01-02573
BREAKWATER REHABILITATION PROJECT
CONTRACT NO. 83-2
PORT OF EASTPORT
MOORING DOLPHINS

SHEET NO. S-9 OF 11
MGE JOB NO. 1808
GEC JOB NO. 543-83

SCALE: AS NOTED
DATE: AUGUST 1985
DRAWN BY: CEM
CHECKED BY: JPM

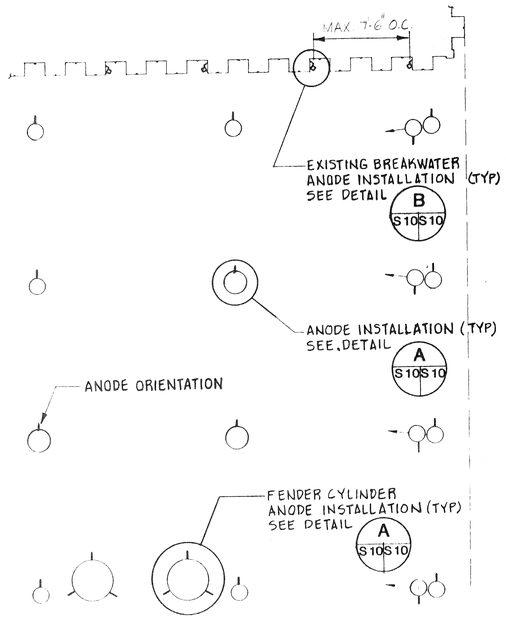

PLAN

CATHODIC PROTECTION - TYPICAL ARRANGEMENT

SCALE: 3/16" = 1'-0"

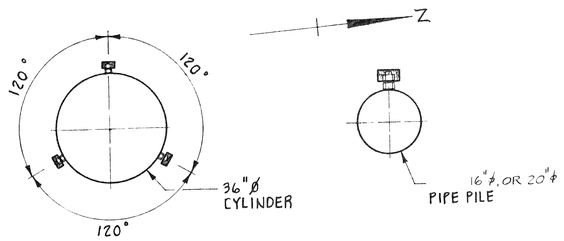

PLAN

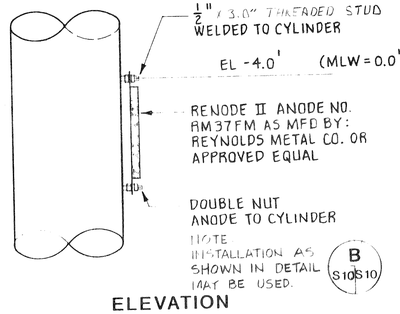

ELEVATION

A S10 S10 CATHODIC PROTECTION CYLINDERS & PIPE PILES

SCALE: 1/2" = 1'-0"

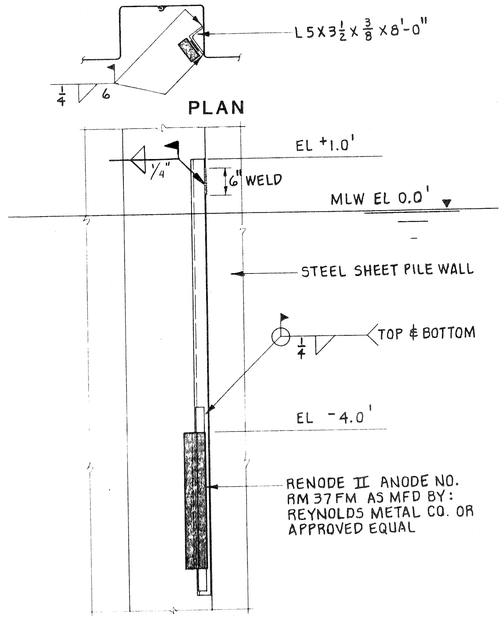

ELEVATION

B S10 S10 CATHODIC PROTECTION - SHEET PILE WALL

SCALE: 1" = 1'-0"

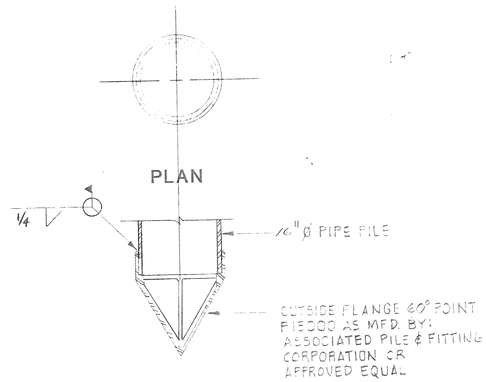

C S9 S10 PIPE PILE TIP - TYPE 2

SCALE: 1" = 1'-0"

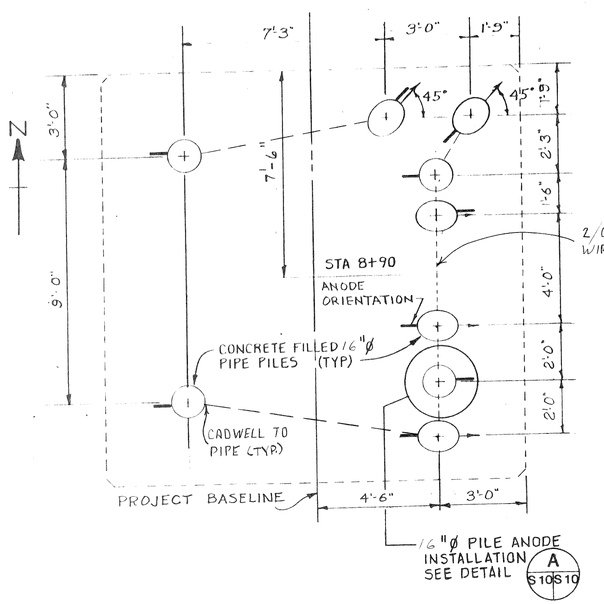

CATHODIC PROTECTION - TYPICAL ARRANGEMENT DOLPHIN A (DOLPHIN B SIMILAR)

SCALE: 3/8" = 1'-0"

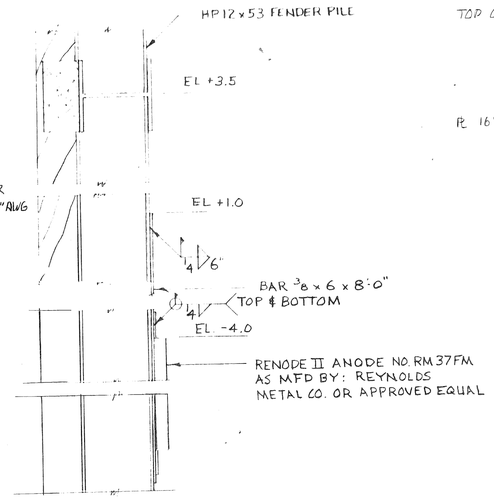

ELEVATION

D S8 S10 CATHODIC PROTECTION - H - PILES

SCALE: 1" = 1'-0"

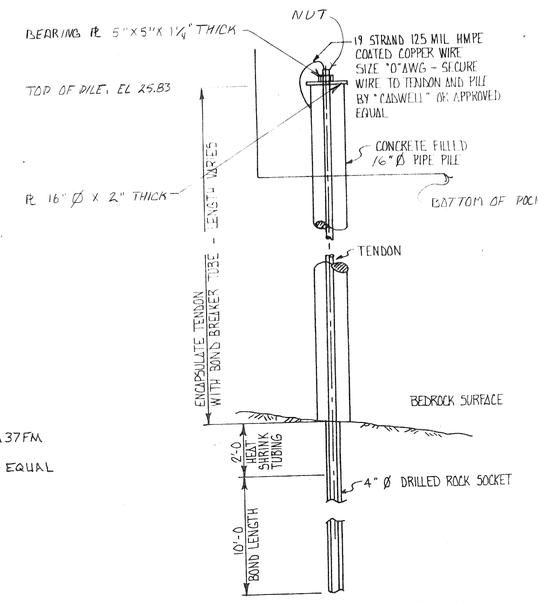

E S9 S10 ROCK ANCHOR DETAIL

NOT TO SCALE

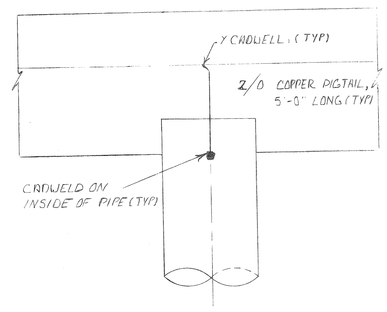

TYPICAL BENT - SECTION

NOTE:

ALL WELD LENGTHS WHERE WELDING IS PERFORMED UNDERWATER ARE INCREASED BY 50%

RECORD DRAWING

THIS RECORD DRAWING HAS BEEN PREPARED TO SHOW THOSE CHANGES MADE DURING THE CONSTRUCTION PROCESS, BASED ON THE NOTES BY THE ENGINEER AND MARKED - UP PRINTS, DRAWINGS, AND OTHER DATA FURNISHED BY THE CONTRACTOR TO THE ENGINEER AND WHICH THE ENGINEER CONSIDERS SIGNIFICANT.

REVISIONS			
2	RECORD DRAWING 1808-006,026,027,062		
1	EDA PROJECT NUMBER ADDED	8/22/84	CEM
NO.	DESCRIPTION	DATE	APPD

SCALE: AS NOTED
DATE: AUGUST 1985
DRAWN BY: CEM
CHECKED BY: JPM

STATE OF MAINE EDWARD A. MORRISON NO. 2464 REGISTERED PROFESSIONAL ENGINEER

MORRISON GEOTECHNICAL ENGINEERING
WINSLOW, MAINE 04902

REG. PROF. ENG. NO. 2464 DATE

EASTPORT PORT AUTHORITY
EDA NO. 01-01-02573
BREAKWATER REHABILITATION PROJECT
CONTRACT NO. 83-2
PORT OF EASTPORT
CATHODIC PROTECTION

SHEET NO. S-10 OF 11
MGE JOB NO. 1808
CEC JOB NO. 543-83

AF 40084

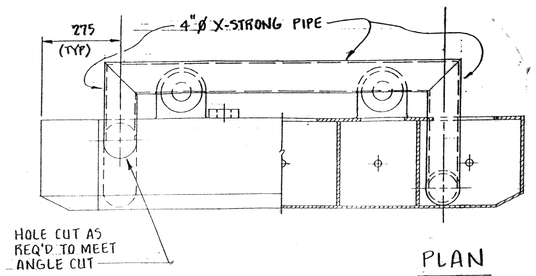

PLAN

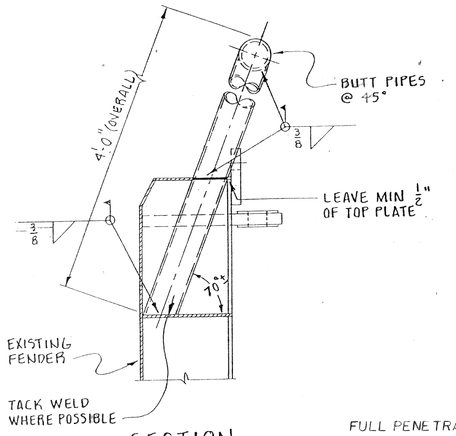

SECTION

SHIP FENDER UPPER EXTENSION

A S7|S11

NOT TO SCALE

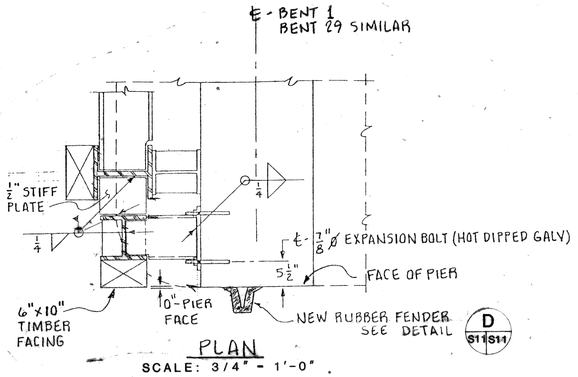

PLAN

SCALE: 3/4" = 1'-0"

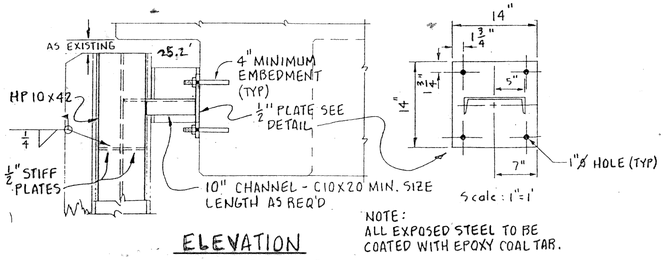

ELEVATION

SCALE: 3/4" = 1'-0"

NOTE:
ALL EXPOSED STEEL TO BE COATED WITH EPOXY COAL TAR.

CORNER FENDER

B S8|S11

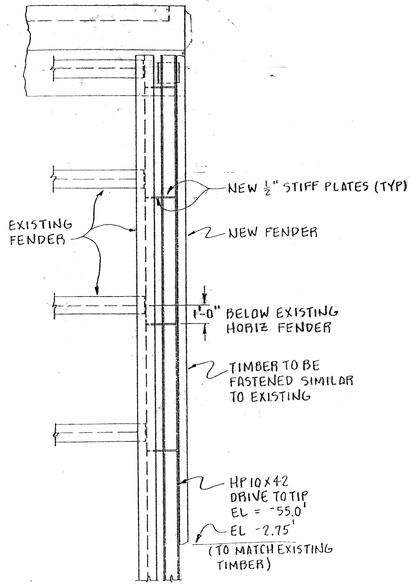

SIDE ELEVATION

SCALE: 1/4" = 1'-0"

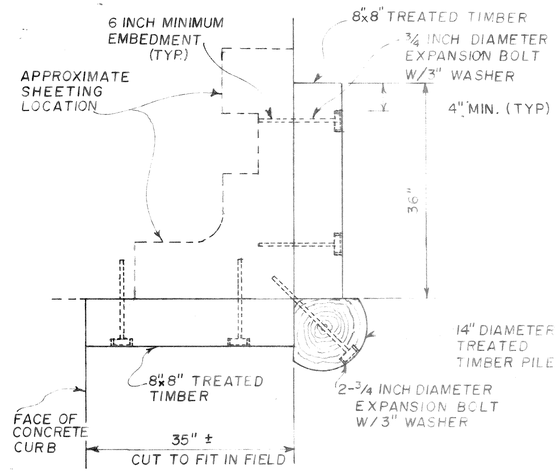

UPPER ATTACHMENT PLAN

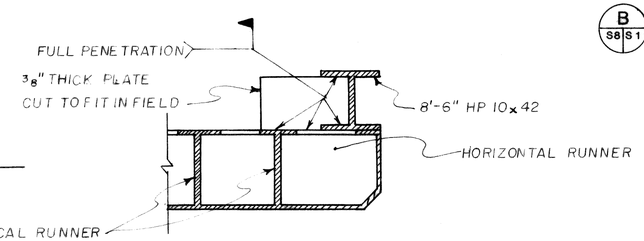

STIFFENER DETAIL

SCALE: 1" = 1'-0"

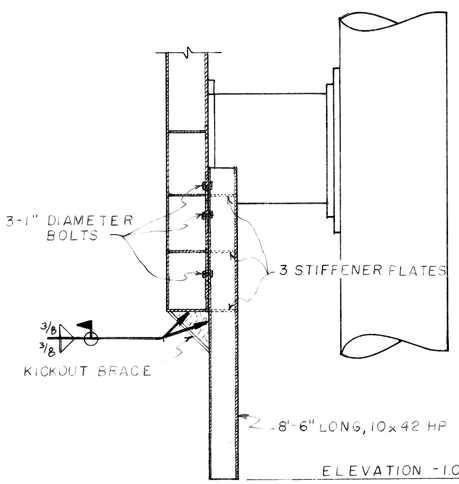

SECTION

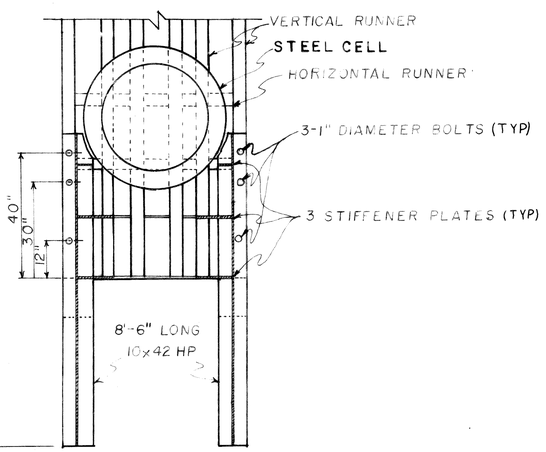

REAR ELEVATION

SHIP FENDER LOWER EXTENSION

E S7|S11

NOT TO SCALE

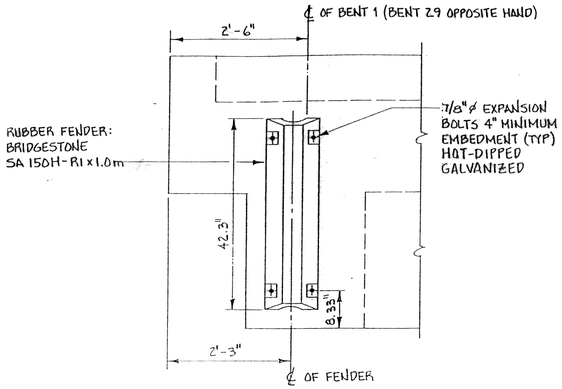

ELEVATION

SCALE: 3/4"=1'-0"

RUBBER FENDER

D S11|S11

SCALE: 3/4" = 1'-0"

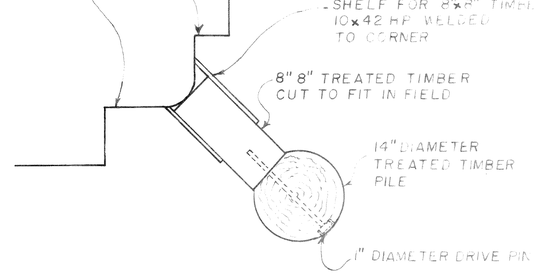

LOWER ATTACHMENT PLAN

TIMBER FENDER

C S2|S11

SCALE: 1" = 1'-0"

RECORD DRAWING

THIS RECORD DRAWING HAS BEEN PREPARED TO SHOW THOSE CHANGES MADE DURING THE CONSTRUCTION PROCESS, BASED ON THE NOTES BY THE ENGINEER AND MARKED - UP PRINTS, DRAWINGS, AND OTHER DATA FURNISHED BY THE CONTRACTOR TO THE ENGINEER AND WHICH THE ENGINEER CONSIDERS SIGNIFICANT.

REVISIONS			
NO.	DESCRIPTION	DATE	APPD

SCALE	AS NOTED
DATE	5/15/86
DRAWN BY	KES
CHECKED BY	DET

1808 S5 13/8

STATE OF MAINE EDWARD B. MORRISON No 2454 REGISTERED PROFESSIONAL ENGINEER

MORRISON GEOTECHNICAL ENGINEERING
WINSLOW, MAINE

REG. PROF. ENG. NO. — DATE 6/13/86

EASTPORT PORT AUTHORITY
EDA NO. 01-01-02573
BREAKWATER REHABILITATION PROJECT
CONTRACT NO. 83-2
PORT OF EASTPORT
FENDER MODIFICATION

DRAWING NO. S-11 OF 11
MGE JOB NO. 1808
543-83

HARLAN E. SPELLER CO. INC