STATE OF MAINE
DEPARTMENT OF TRANSPORTATION

HOULTON MAINTENANCE SALT SHED

SPECIFICATIONS

Design:
-International Building Code 2009
-ACI 318-08

DESIGN LOADING

Live Load ------ Impact of 30,000lb Vehicle @ Endwall Concrete Only
Ground Snow Load ---------- 100psf
Wind Load ---------- 105mph
---------- Exposure C, Catagory I

MATERIALS

Reinforcing Steel ---------- ASTM A615, Grade 60, Epoxy Coated
Structural Steel:
High Strength Bolts ---------- ASTM A325, Type I

BASIC DESIGN STRESSES

Concrete ---------- f 'c = 4,000 psi
Reinforcing Steel ---------- f y = 60,000 psi

LIST OF DRAWINGS

Title Sheet ---------- 1
General Site Plan ---------- 2
Foundation Plan ---------- 3
Foundation Reinforcing Plan ---------- 4
North & South Sidewall Dimensional Details ---------- 5
North & South Sidewall Reinforcing Details ---------- 6
West End Wall Dimensional Details ---------- 7
West End Wall Reinforcing Details ---------- 8
East End Wall Dimensional Details ---------- 9
East End Wall Reinforcing Details ---------- 10
West End Wall Framing Details ---------- 11
East End Wall Framing Details ---------- 12
Electrical Plan ---------- 13

PROJECT LOCATION:	159 Bangor Street, Houlton Maine
PROGRAM AREA:	Highway Maintenance Program
OUTLINE OF WORK:	Construction of Salt Storage Building

WIN 21248.00

STATE OF MAINE
DEPARTMENT OF TRANSPORTATION
APPROVED
COMMISSIONER: DATE 3/25/16
CHIEF ENGINEER: DATE 3-25-16

STATE OF MAINE ERIC J. CALDERWOOD No. 9099 LICENSED PROFESSIONAL ENGINEER

SIGNATURE
9099
P.E. NUMBER
DATE

PROJECT INFORMATION

PROGRAM	HIGHWAY
PROJECT MANAGER	R. GRADIE
DESIGNER	T. AGUILAR
CONSULTANT	CALDERWOOD ENGINEERING
PROJECT RESIDENT	
CONTRACTOR	
PROJECT COMPLETION DATE	

HOULTON MAINTENANCE SALT SHED

TITLE SHEET

SHEET NUMBER
1
OF 13

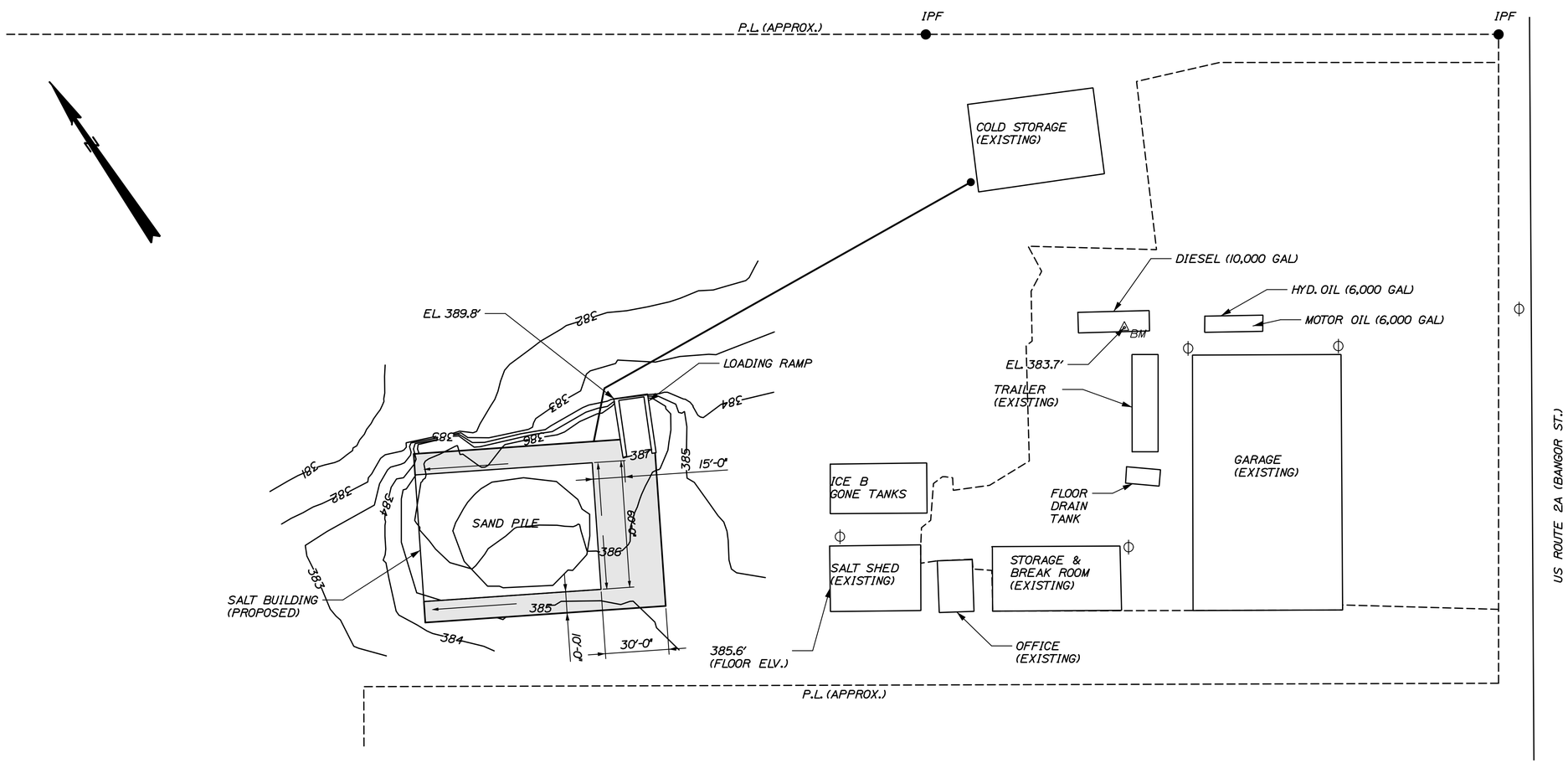

NOTES:

1.) PAVEMENT LIMITS ON EXTERIOR OF SALT SHED ARE AS SHOWN.

2.) EXACT LOCATION OF THE UNDERDRAIN TERMINATION SHALL BE DETERMINED IN THE FIELD BY THE RESIDENT.

3.) CONTRACTOR WILL BE REQUIRED TO EXCAVATE, SUPPLY, INSTALL, BACKFILL AND COMPACT, PER NATIONAL ELECTRICAL CODE (NEC) UP TO 300FT OF SCHEDULE 80, 2"ϕ CONDUIT. THE CONDUIT WILL EXIT THE NEW SALT BUILDING AS SHOWN IN PLANS AND TRAVEL TO THE EXISTING COLD STORAGE BUILDING AS INDICATED ON THE PLANS. THE CONTRACTOR WILL BE REQUIRED TO PROVIDE AND PULL 3 RUNS OF 1/0 ALUMINUM CABLE AND 1 RUN OF #6 ALUMINUM GROUND CABLE FROM THE LOAD CENTER OF THE NEW BUILDING. PAYMENT FOR ELECTRICAL SUPPLY, CONDUIT INSTALLATION AND RELATED WORK SHALL BE CONSIDERED INCIDENTAL TO THE SALT SHED BUILDING.

4.) PAYMENT FOR EXCAVATION AND BACKFILL, INCLUDING GRAVEL, SHALL BE CONSIDERED INCIDENTAL TO SALT SHED BUILDING.

5.) DURING CONSTRUCTION IF IT IS DETERMINED THAT THERE IS EXCAVATION MATERIAL SUITABLE FOR REUSE THE CONTRACTOR MAY USE THE EXCAVATED MATERIAL FOR BACKFILL AS APPROVED BY THE RESIDENT. ALL EXCAVATED MATERIAL UNSUITABLE FOR REUSE SHALL BE STOCK PILED ON SITE FOR FUTURE USE. EXACT LOCATION OF STOCK PILE SHALL BE DETERMINED IN THE FIELD BY THE RESIDENT.

6.) BUILDING LOCATION AND ELEVATIONS SHOWN ARE FOR CONCEPTUAL PURPOSES ONLY. EXACT LOCATION OF BUILDING AND ELEVATIONS TO BE DETERMINED IN FIELD BY RESIDENT.

7.) ALL STRUCTURAL STEEL SHAPES SHOWN IN PLANS INCLUDEING BOLLARDS SHALL BE GALVANIZED UNLESS NOTED OTHERWISE.

CALDERWOOD ENGINEERING, ETC.
STRUCTURAL ENGINEERING • DETAILING SERVICES
222 RIVER RD, RICHMOND, ME 04357 PH/FX (207)737-2007/(207) 737-2008

PREPARED FOR:
STATE OF MAINE DOT
HOULTON, ME SALT SHED
WIN 21248.00

STATE OF MAINE ERIC J. CALDERWOOD No. 9099 LICENSED PROFESSIONAL ENGINEER

9099 P.E. NUMBER
DATE

	BY	DATE
DESIGN-DETAILED	TEPA	JUNE 2015
CHECKED-REVIEWED		
REVISIONS 1		
REVISIONS 2		
REVISIONS 3		
REVISIONS 4		
FIELD CHANGES		

HOULTON MAINTANANCE SALT SHED

GENERAL SITE PLAN

SHEET NUMBER
2
OF 13

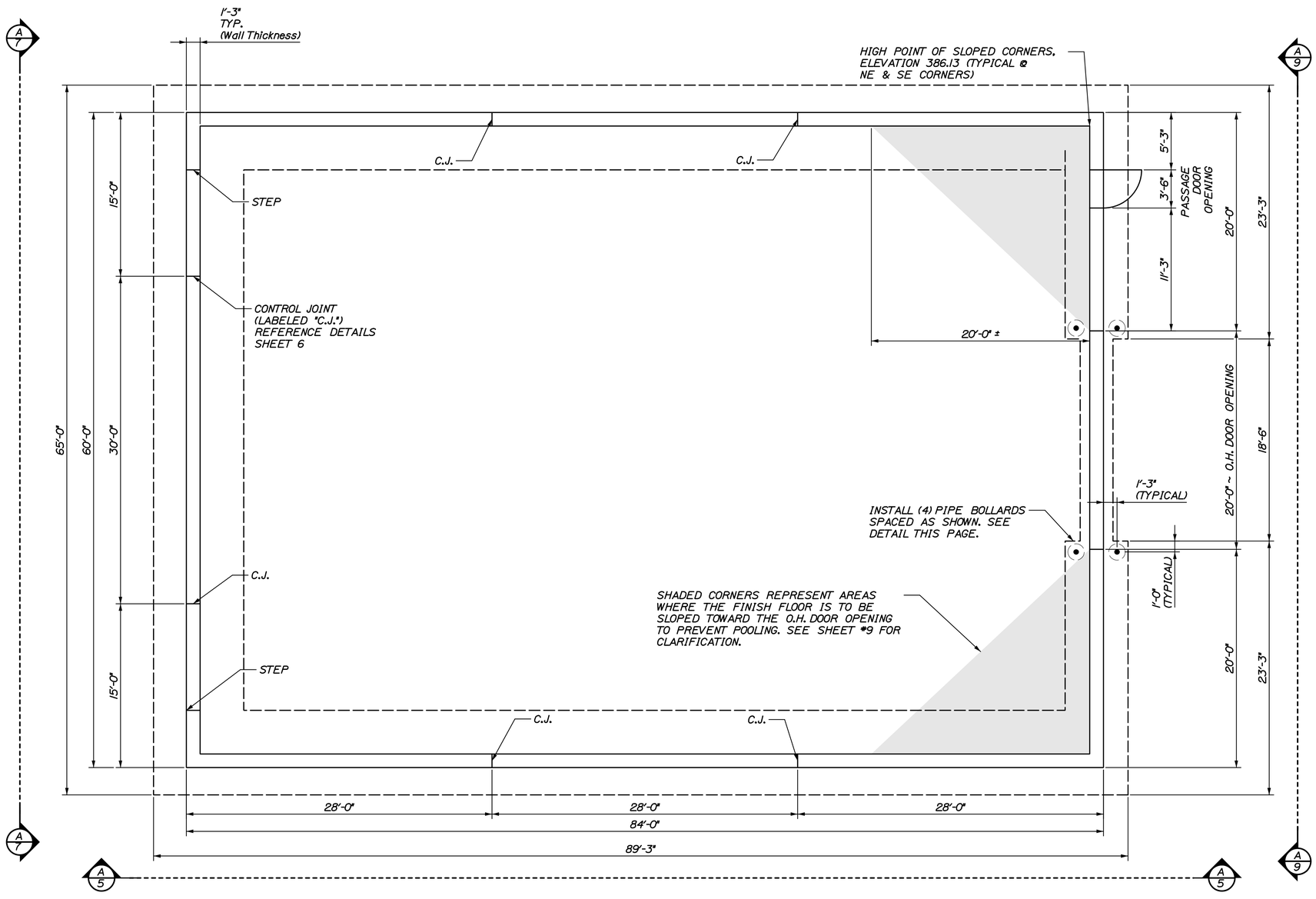

A 3 FOUDATION PLAN
3/16"=1'-0"

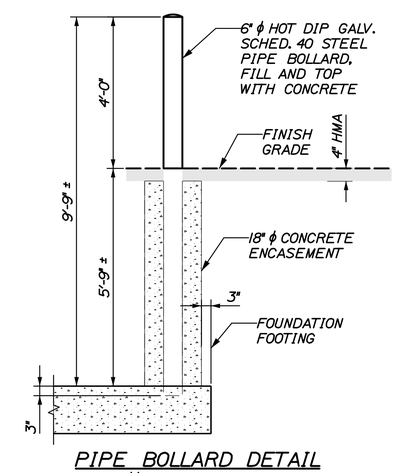

PIPE BOLLARD DETAIL
SCALE: 1/2" = 1'-0"

CALDERWOOD ENGINEERING, ETC.
STRUCTURAL ENGINEERING • DETAILING SERVICES
222 RIVER RD, RICHMOND, ME 04357 PH/FX (207)737-2007/(207) 737-2008

PREPARED FOR:
STATE OF MAINE DOT

HOULTON, ME SALT SHED
WIN 21248.00

STATE OF MAINE
ERIC A. CALDERWOOD
No. 9099
LICENSED
PROFESSIONAL ENGINEER

9099
P.E. NUMBER

DATE

	BY	DATE
DESIGN-DETAILED	TEPA	JUNE 2015
CHECKED-REVIEWED		
REVISIONS 1		
REVISIONS 2		
REVISIONS 3		
REVISIONS 4		
FIELD CHANGES		

HOULTON MAINTANANCE SALT SHED
FOUNDATION PLAN

SHEET NUMBER
3
OF 13

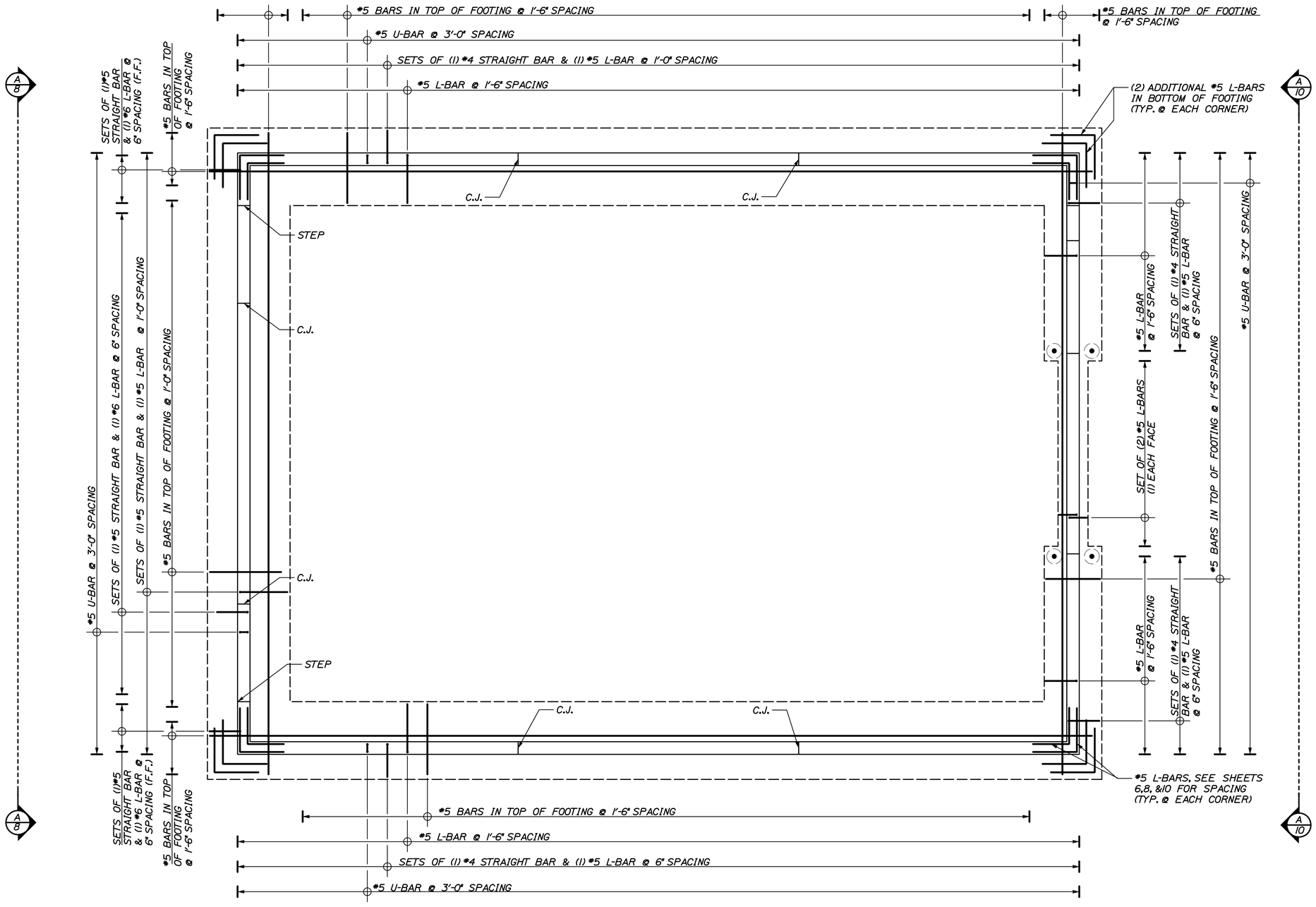

NOTE: HORIZONTAL REINFORCING STEEL IN FOUNDATION WALL NOT SHOWN, SEE SHEETS 6, 8, & 10 FOR DETAILS NOT SHOWN HERE.

A/4 REINFORCING PLAN
3/16"=1'-0"

CALDERWOOD ENGINEERING, ETC.
STRUCTURAL ENGINEERING • DETAILING SERVICES
222 RIVER RD. RICHMOND, ME 04357 PH/FX (207)737-2007/(207) 737-2008
PREPARED FOR:
STATE OF MAINE DOT

HOULTON, ME SALT SHED
WIN 21248.00

STATE OF MAINE
ERIC A. CALDERWOOD
No. 9099
LICENSED PROFESSIONAL ENGINEER

P.E. NUMBER 9099
DATE

	BY	DATE
DESIGN-DETAILED	TEPA	JUNE 2015
CHECKED-REVIEWED		
REVISIONS 1		
REVISIONS 2		
REVISIONS 3		
REVISIONS 4		
FIELD CHANGES		

HOULTON MAINTANANCE SALT SHED

FOUNDATION REINFORCING PLAN

SHEET NUMBER
4
OF 13

CALDERWOOD ENGINEERING
222 RIVER RD. RICHMOND, ME 04357
PH/FX (207)737-2007/FAX (207)737-2008

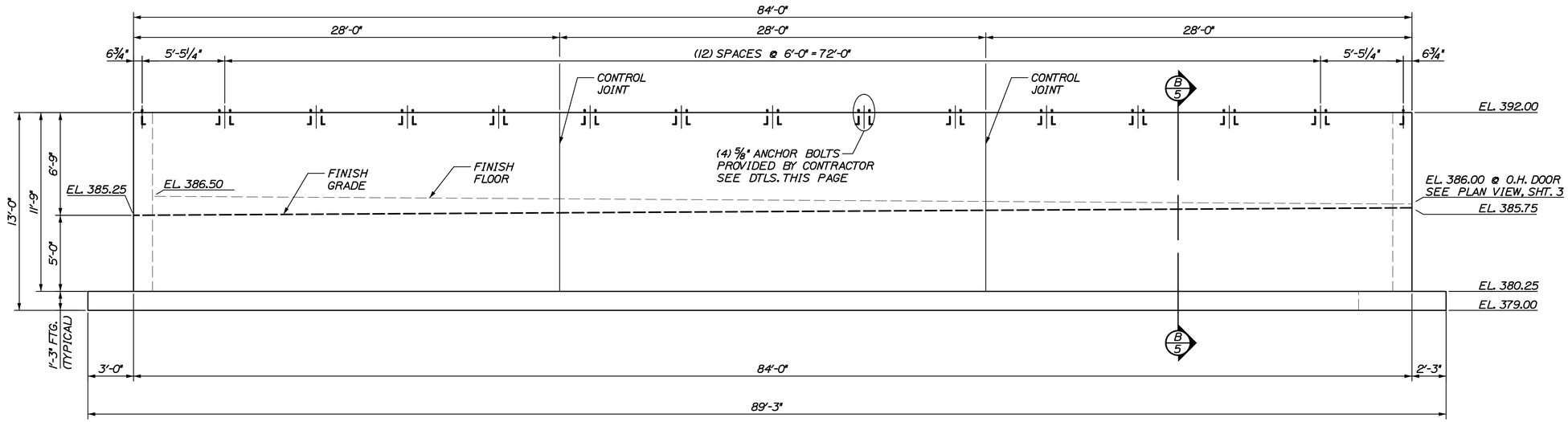

A/5 SIDEWALL ELEVATION

SCALE: 1/4" = 1'-0"
TYPICAL FOR NORTH AND SOUTH SIDEWALLS
ARCHES NOT SHOWN

NOTE:
ACTUAL ANCHOR BOLT LAYOUT TO BE COORDINATED WITH THE LAMINATED ARCH MANUFACTURER. GENERAL CONTRACTOR IS RESPONSIBLE FOR CHECKING LAYOUT OF ANCHOR BOLTS WITH ARCH BASE PLATES TO ENSURE A PROPER FIT.

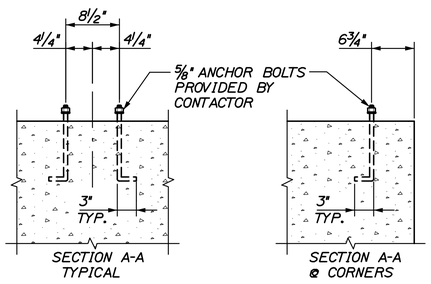

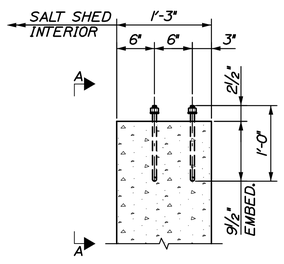

ANCHOR BOLT DETAIL

SCALE: 1" = 1'-0"

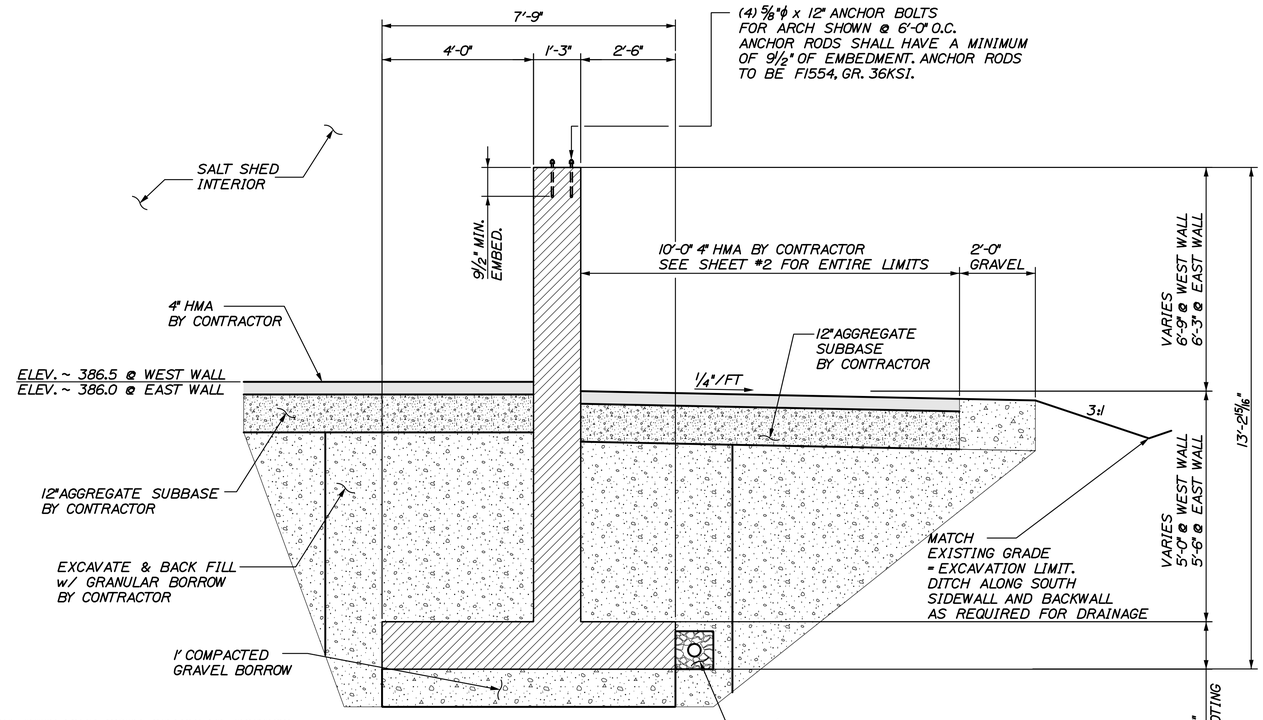

B/5 SIDEWALL SECTION

SCALE: 1/2" = 1'-0"

NOTES:
1.) EXCAVATED MATERIAL SHALL BE REPLACED WITH GRANULAR BORROW. EXCAVATED MATERIAL SHALL BE STOCK PILED ON SITE FOR REUSE. LOCATION OF STOCK PILE SHALL BE DETERMINED BY RESIDENT IN FIELD.
2.) ELEVATIONS SHOWN ARE BASED OFF AN ARBITRARY DATUM.
3.) BACKSLOPE MAY BE REQUIRED IN SOME AREAS TOWARDS REAR OF BUILDING AND SIDEWALL. BACKSLOPE TO FORM DITCH LINE THAT ALLOWS DRAINAGE AROUND BUILDING.
4.) GRANULAR BORROW BACK FILL LIMITS SHALL EXTEND 18 INCHES PAST THE END OF THE FOOTING (BOTH SIDES) TYPICAL ALONG EACH WALL.

CALDERWOOD ENGINEERING, ETC.
STRUCTURAL ENGINEERING • DETAILING SERVICES
222 RIVER RD. RICHMOND, ME 04357 PH/FX (207)737-2007/(207) 737-2008
PREPARED FOR:
STATE OF MAINE DOT

HOULTON, ME SALT SHED
WIN 21248.00

STATE OF MAINE
ERIC A. CALDERWOOD
No. 9099
LICENSED
PROFESSIONAL ENGINEER

P.E. NUMBER 9099
DATE

	BY	DATE
DESIGN-DETAILED	TEPA	JUNE 2015
CHECKED-REVIEWED		
REVISIONS 1		
REVISIONS 2		
REVISIONS 3		
REVISIONS 4		
FIELD CHANGES		

HOULTON MAINTANANCE SALT SHED

NORTH & SOUTH SIDEWALL DIMENSIONAL DETAILS

SHEET NUMBER
5
OF 13

CALDERWOOD ENGINEERING
222 RIVER RD. RICHMOND, ME 04357
PH. (207) 737-2007 FAX (207) 737-2008

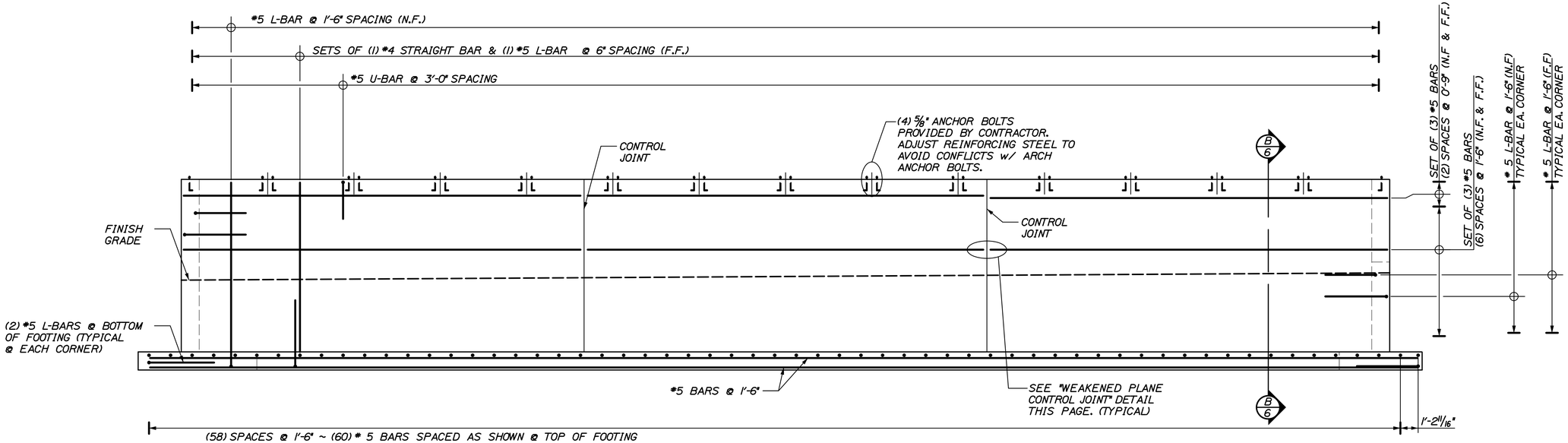

A/6 SIDEWALL REINFORCING
SCALE: 1/4" = 1'-0"
TYPICAL FOR NORTH AND SOUTH SIDEWALLS
ARCHES NOT SHOWN

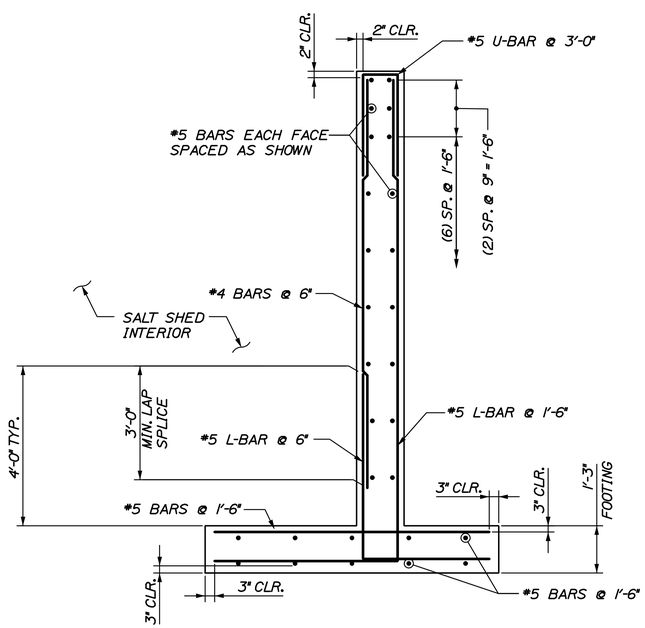

B/6 SIDEWALL REINFORCING SECTION
SCALE: 1/2" = 1'-0"

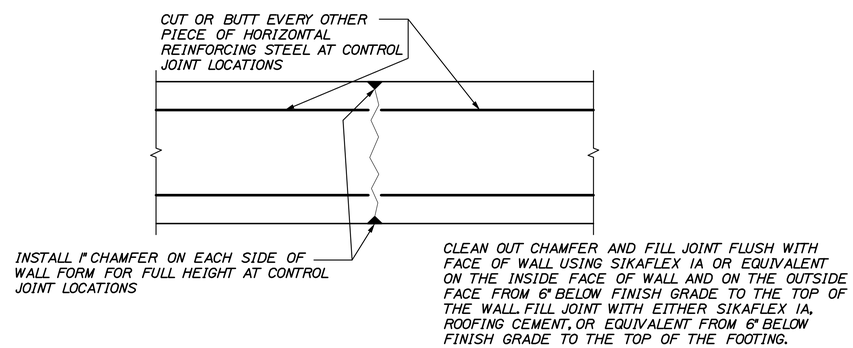

WEAKENED PLANE CONTROL JOINT
SCALE: 1 1/2" = 1'-0"

CALDERWOOD ENGINEERING, ETC.
STRUCTURAL ENGINEERING • DETAILING SERVICES
222 RIVER RD, RICHMOND, ME 04357 PH/FX (207)737-2007/(207) 737-2008

PREPARED FOR:
STATE OF MAINE DOT
HOULTON, ME SALT SHED
WIN 21248.00

STATE OF MAINE ERIC J. CALDERWOOD No. 9099 LICENSED PROFESSIONAL ENGINEER

9099 P.E. NUMBER
DATE

	BY	DATE
DESIGN-DETAILED	TEPA	JUNE 2015
CHECKED-REVIEWED		
REVISIONS 1		
REVISIONS 2		
REVISIONS 3		
REVISIONS 4		
FIELD CHANGES		

HOULTON MAINTANANCE SALT SHED
NORTH & SOUTH SIDEWALL REINFORCING DETAILS

SHEET NUMBER
6
OF 13

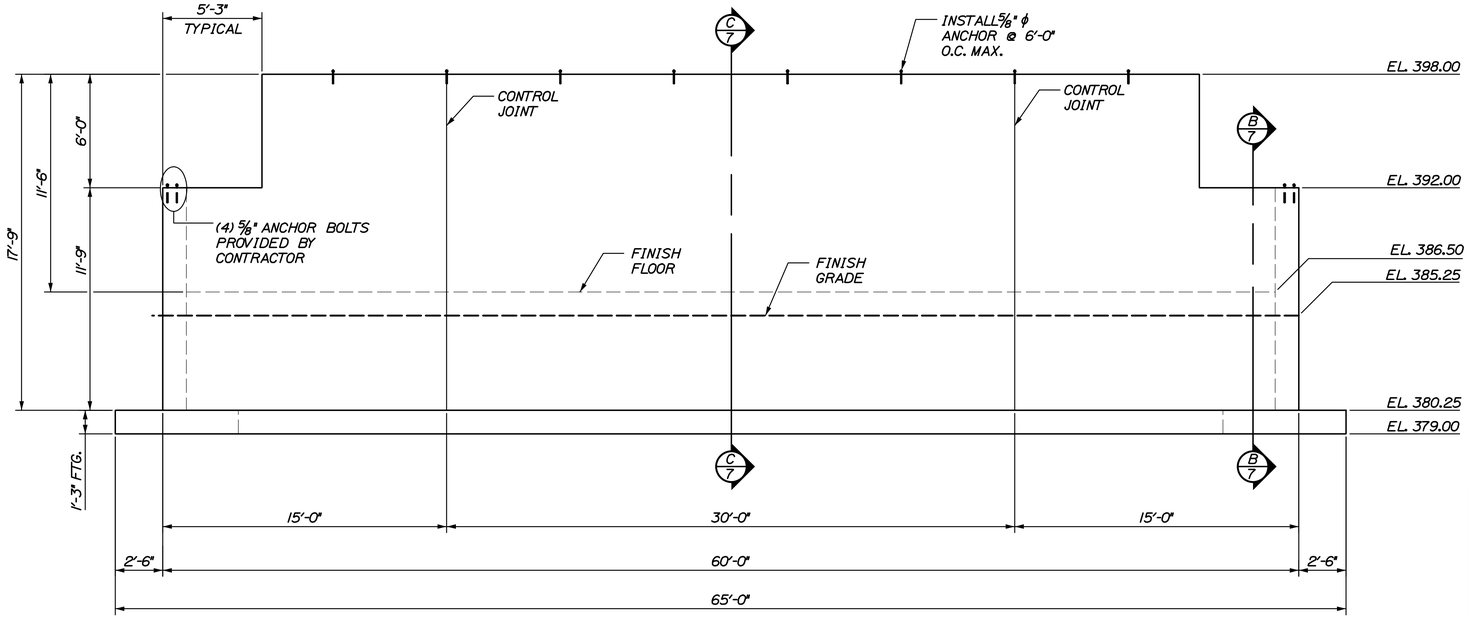

A/7 WEST END WALL ELEVATION
SCALE: 1/4" = 1'-0"

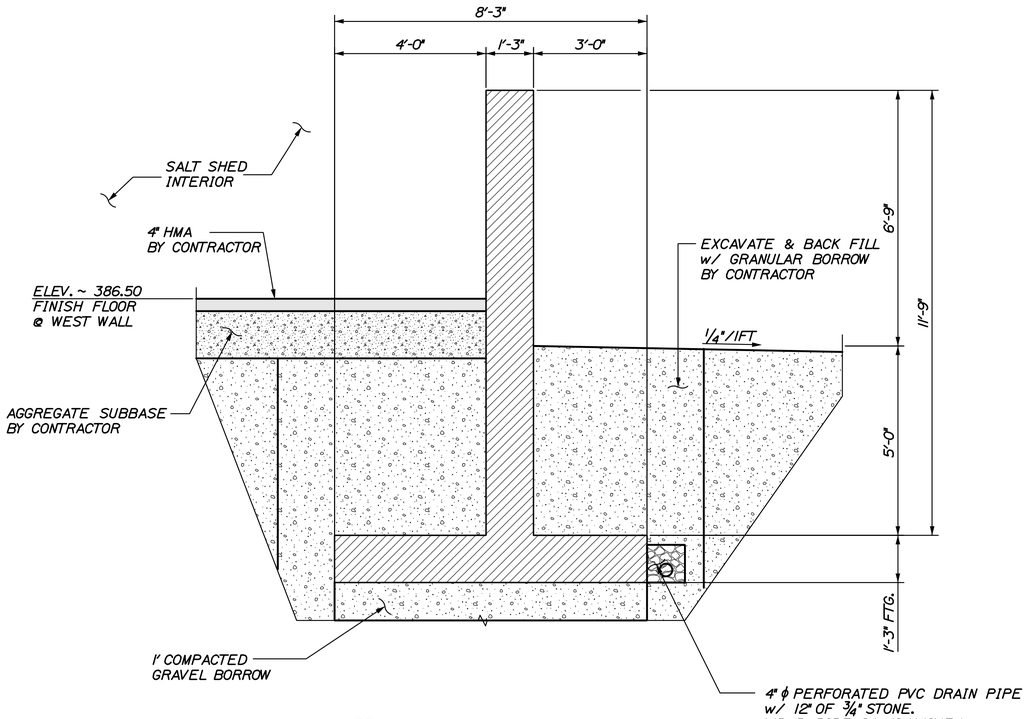

B/7 WEST END WALL SECTION
SCALE: 1/2" = 1'-0"

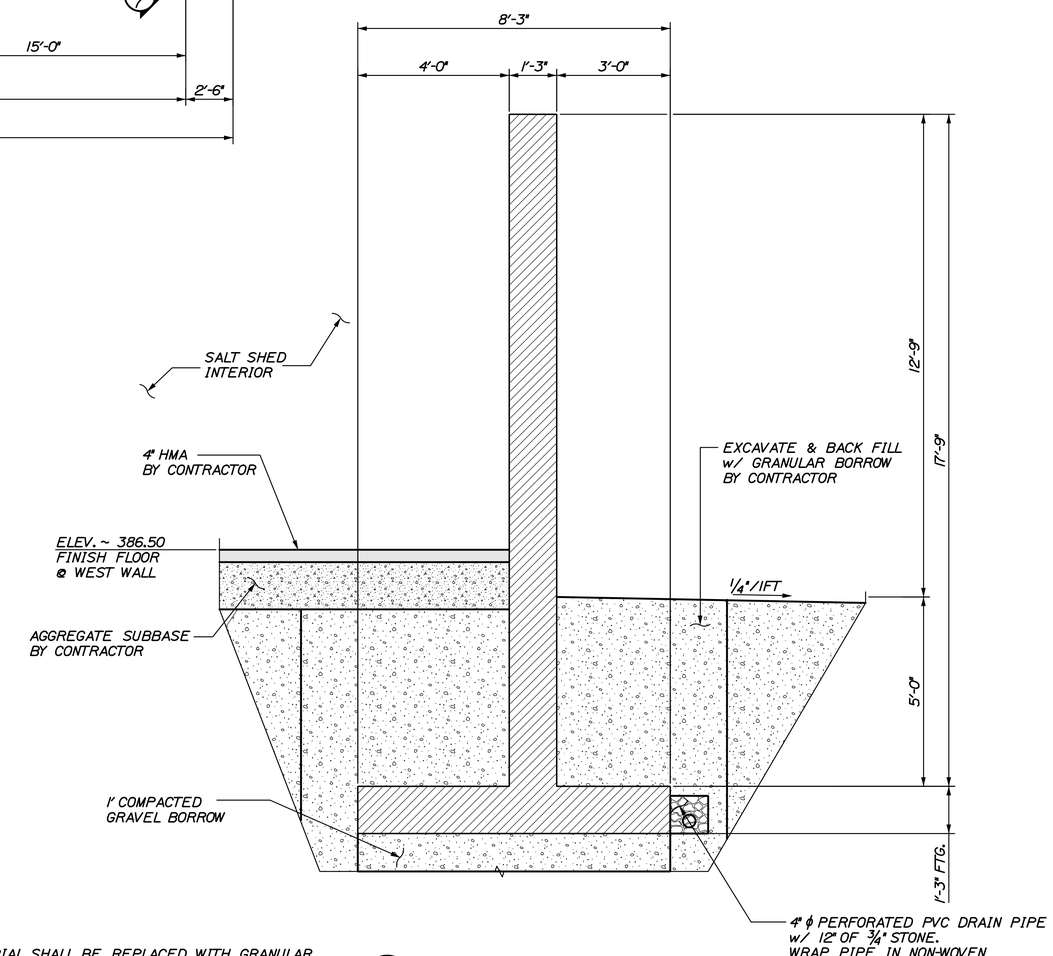

C/7 WEST END WALL SECTION
SCALE: 1/2" = 1'-0"

NOTES:
1.) EXCAVATED MATERIAL SHALL BE REPLACED WITH GRANULAR BORROW. EXCAVATED MATERIAL SHALL BE STOCK PILED ON SITE FOR REUSE. LOCATION OF STOCK PILE SHALL BE DETERMINED BY RESIDENT IN FIELD.
2.) ELEVATIONS SHOWN ARE BASED OFF AN ARBITRARY DATUM.
3.) BACKSLOPE MAY BE REQUIRED IN SOME AREAS TOWARDS REAR OF BUILDING.
4.) GRANULAR BORROW BACK FILL LIMITS SHALL EXTEND 18INCHES PAST THE END OF THE FOOTING (BOTH SIDES) TYPICAL ALONG EACH WALL.

CALDERWOOD ENGINEERING, ETC.
STRUCTURAL ENGINEERING • DETAILING SERVICES
222 RIVER RD. RICHMOND, ME 04357 PH/FX (207)737-2007/(207) 737-2008

PREPARED FOR:
STATE OF MAINE DOT

HOULTON, ME SALT SHED
WIN 21248.00

STATE OF MAINE
ERIC J. CALDERWOOD
No. 9099
LICENSED
PROFESSIONAL ENGINEER

P.E. NUMBER 9099

DATE

	BY	DATE
DESIGN-DETAILED	TEPA	JUNE 2015
CHECKED-REVIEWED		
REVISIONS 1		
REVISIONS 2		
REVISIONS 3		
REVISIONS 4		
FIELD CHANGES		

HOULTON MAINTANANCE SALT SHED

WEST END WALL DIMENSIONAL DETAILS

SHEET NUMBER
7
OF 13

CALDERWOOD ENGINEERING
222 RIVER RD.
RICHMOND, ME 04357
PH. (207)737-2007 FAX (207)737-2008

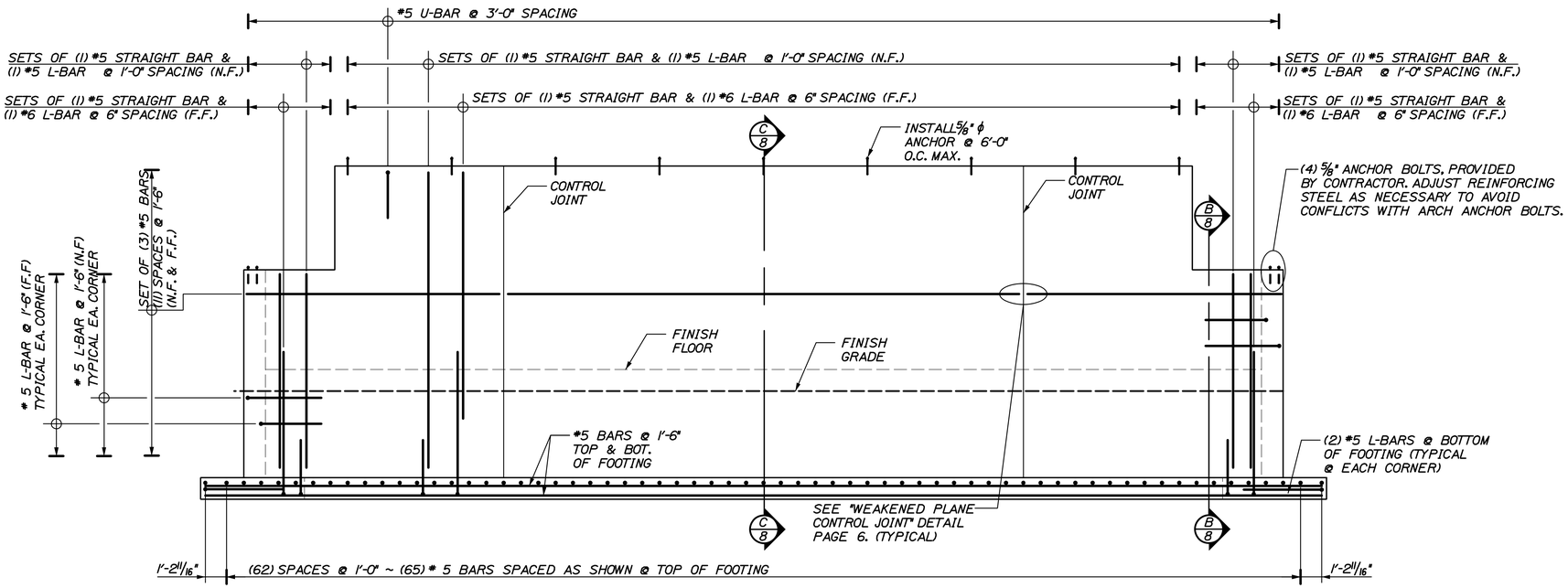

A/8 WEST END WALL REINFORCING
SCALE: 1/4" = 1'-0"

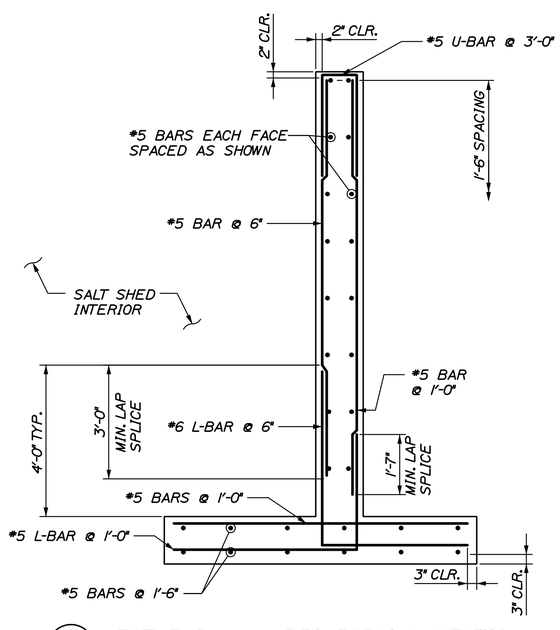

B/8 WEST END WALL REINFORCING SECTION
SCALE: 1/2" = 1'-0"

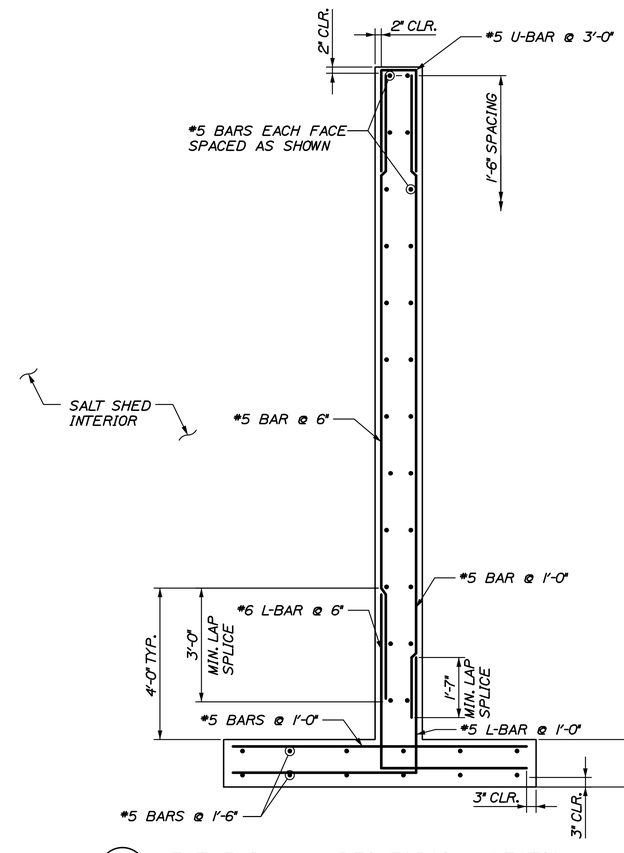

C/8 WEST END WALL REINFORCING SECTION
SCALE: 1/2" = 1'-0"

CALDERWOOD ENGINEERING, ETC.
STRUCTURAL ENGINEERING • DETAILING SERVICES
222 RIVER RD. RICHMOND, ME 04357 PH/FX (207)737-2007/(207) 737-2008

PREPARED FOR:
STATE OF MAINE DOT

HOULTON, ME SALT SHED
WIN 21248.00

STATE OF MAINE
ERIC A. CALDERWOOD
No. 9099
LICENSED
PROFESSIONAL ENGINEER

P.E. NUMBER 9099
DATE

	BY	DATE
DESIGN-DETAILED	TEPA	JUNE 2015
CHECKED-REVIEWED		
REVISIONS 1		
REVISIONS 2		
REVISIONS 3		
REVISIONS 4		
FIELD CHANGES		

HOULTON MAINTANANCE SALT SHED

WEST END WALL REINFORCING DETAILS

SHEET NUMBER
8
OF 13

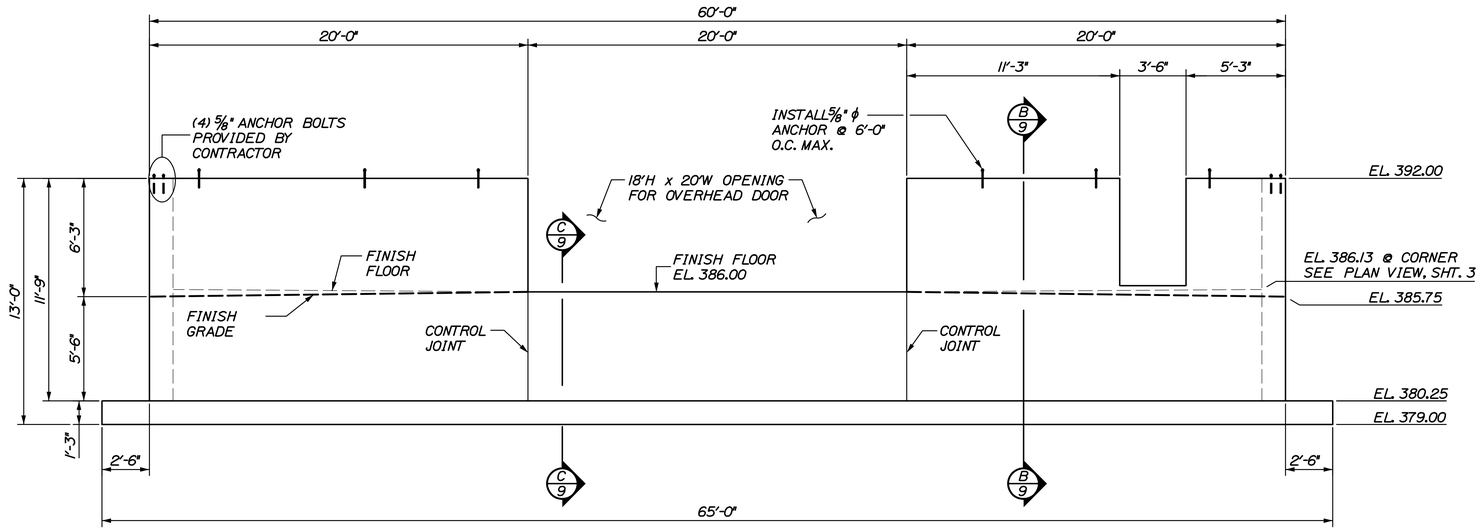

A/9 EAST END WALL ELEVATION
SCALE: 1/4" = 1'-0"

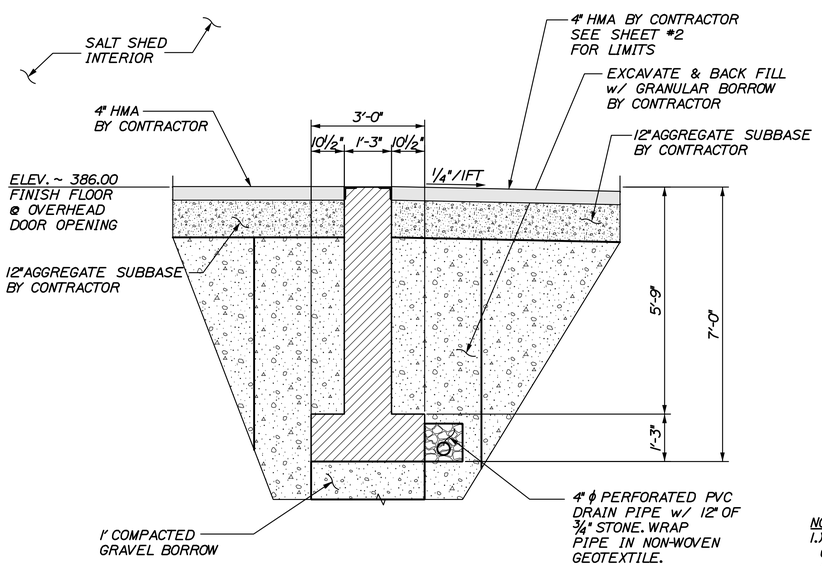

C/9 SECTION @ OVERHEAD DOOR
SCALE: 1/2" = 1'-0"

NOTES:
1.) EXCAVATED MATERIAL SHALL BE REPLACED WITH GRANULAR BORROW. EXCAVATED MATERIAL SHALL BE STOCK PILED ON SITE FOR REUSE. LOCATION OF STOCK PILE SHALL BE DETERMINED BY RESIDENT IN FIELD.
2.) ELEVATIONS SHOWN ARE BASED OFF AN ARBITRARY DATUM.
3.) SLOPE DOWN AWAY FROM BUILDING TO MATCH THE EXISTING LOT.
4.) GRANULAR BORROW BACK FILL LIMITS SHALL EXTEND 18 INCHES PAST THE END OF THE FOOTING (BOTH SIDES) TYPICAL ALONG EACH WALL.

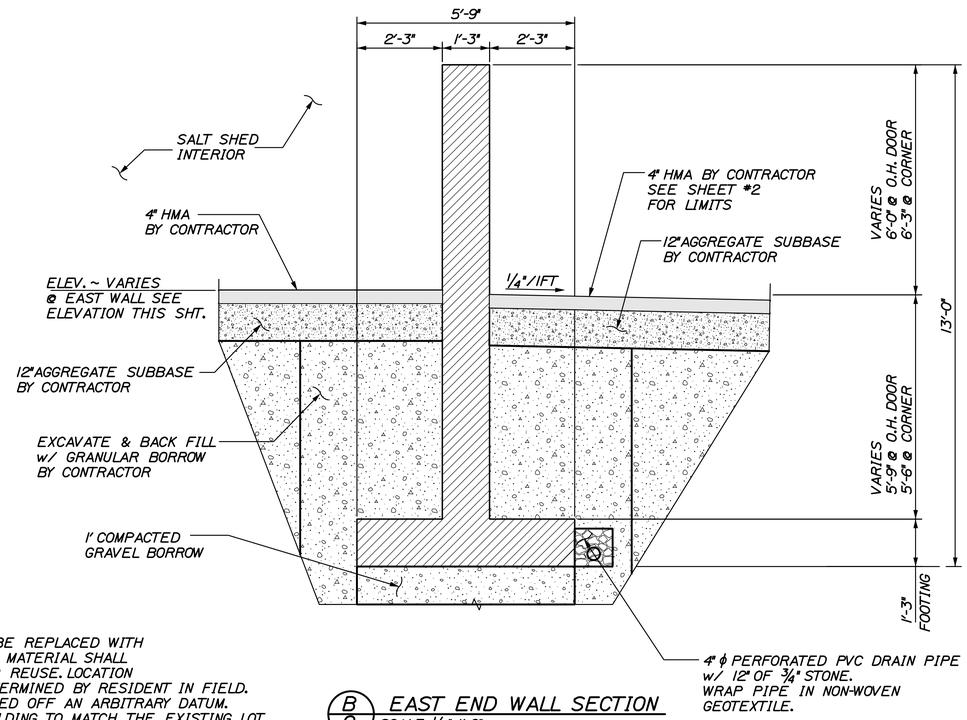

B/9 EAST END WALL SECTION
SCALE: 1/2" = 1'-0"

CALDERWOOD ENGINEERING, ETC.
STRUCTURAL ENGINEERING • DETAILING SERVICES
222 RIVER RD. RICHMOND, ME 04357 PH/FX (207)737-2007/(207) 737-2008
PREPARED FOR:
STATE OF MAINE DOT

HOULTON, ME SALT SHED
WIN 21248.00

STATE OF MAINE
ERIC A. CALDERWOOD
No. 9099
LICENSED PROFESSIONAL ENGINEER

P.E. NUMBER 9099
DATE

	BY	DATE
DESIGN-DETAILED	TEPA	JUNE 2015
CHECKED-REVIEWED		
REVISIONS 1		
REVISIONS 2		
REVISIONS 3		
REVISIONS 4		
FIELD CHANGES		

HOULTON MAINTANANCE SALT SHED

EAST END WALL DIMENSIONAL DETAILS

SHEET NUMBER
9
OF 13

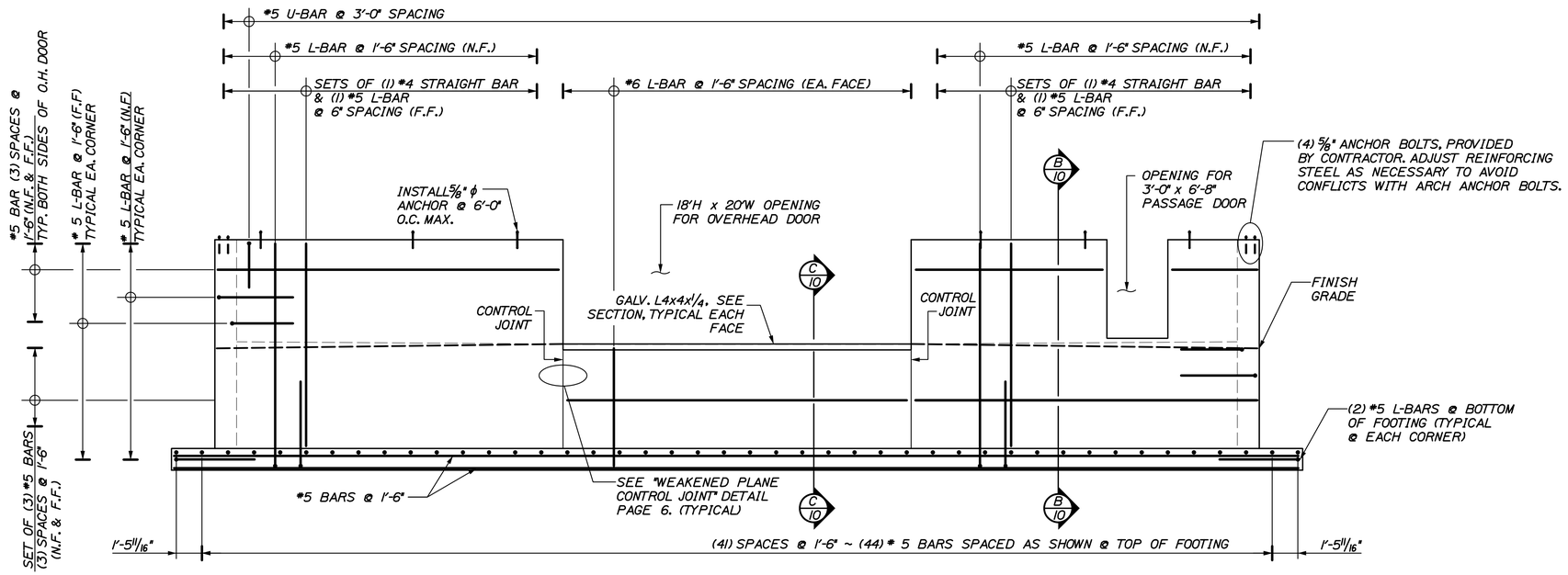

A/10 EAST END WALL REINFORCING
SCALE: 1/4" = 1'-0"

NOTE: CUT REINFORCING STEEL AS NECESSARY AT DOOR OPENINGS

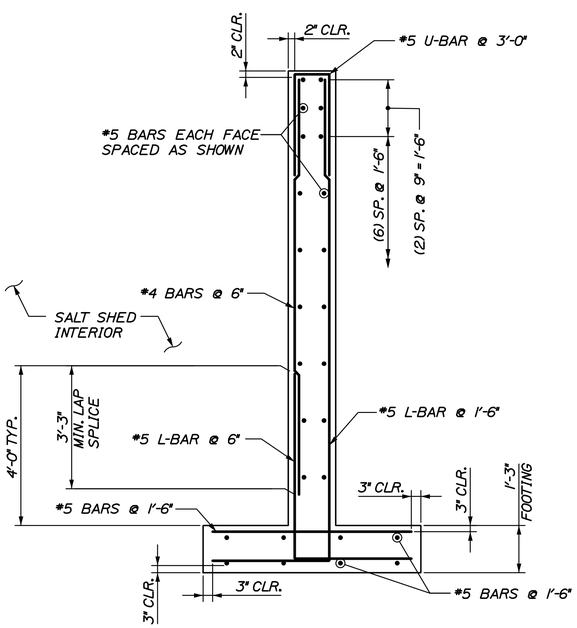

B/10 EAST END WALL REINFORCING SECTION
SCALE: 1/2" = 1'-0"

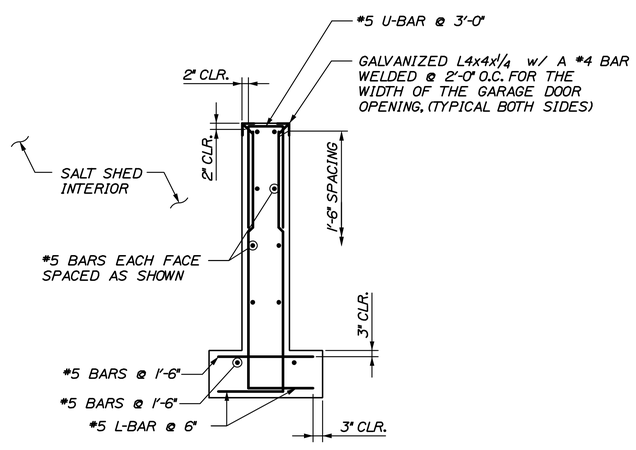

C/10 EAST END WALL REINFORCING SECTION
SCALE: 1/2" = 1'-0"

CALDERWOOD ENGINEERING, ETC.
STRUCTURAL ENGINEERING • DETAILING SERVICES
222 RIVER RD, RICHMOND, ME 04357 PH/FX (207)737-2007/(207) 737-2008

PREPARED FOR:
STATE OF MAINE DOT
HOULTON, ME SALT SHED
WIN 21248.00

STATE OF MAINE
ERIC J. CALDERWOOD
No. 9099
LICENSED
PROFESSIONAL ENGINEER

9099
P.E. NUMBER
DATE

	BY	DATE
DESIGN-DETAILED	TEPA	JUNE 2015
CHECKED-REVIEWED		
REVISIONS 1		
REVISIONS 2		
REVISIONS 3		
REVISIONS 4		
FIELD CHANGES		

HOULTON MAINTANANCE SALT SHED

EAST END WALL REINFORCING DETAILS

SHEET NUMBER
10
OF 13

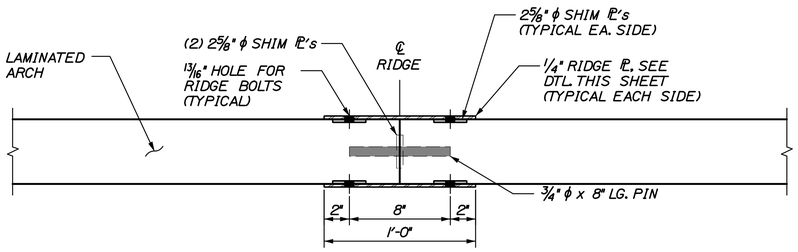

PLAN VIEW

NOTE:
DEPENDING ON SIZE AND TYPE OF ARCH SELECTED, LOCATION OF CONNECTION BOLTS AND AND PINS AT THE RIDGE MAY CHANGE.
ACTUAL RIDGE CONNECTION TO BE DESIGNED AND SUPPLIED BY ARCH MANUFACTURER.

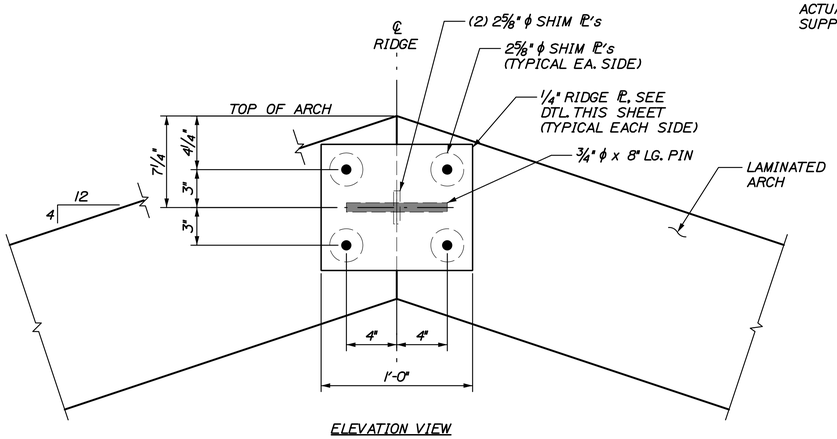

ELEVATION VIEW

RIDGE CONNECTION
SCALE: 2" = 1'-0"

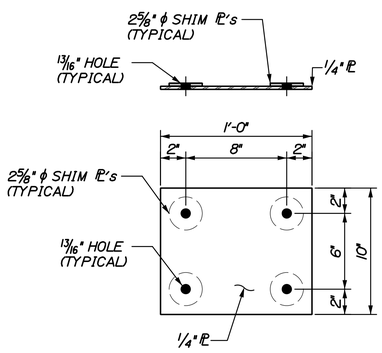

RIDGE CONNECTION PL
SCALE: 2" = 1'-0"

NOTE:
RIDGE CONNECTION PL SHOWN IS AN EXAMPLE. COORDINATE WITH ARCH MANUFACTURER FOR ACTUAL PLATE TO BE USED.

METAL ROOFING NOTES:

1. THE SALT SHED IS TO BE ROOFED WITH THE EVERLAST DL-150 PRODUCT, OR AN EQUIVALENT PRODUCT. THIS PRODUCT USES DOUBLE-LOCK STANDING SEAM ROOF PANELS.

2. THE FINISH IS TO BE BARE GALVALUME.

3. THE PANELS ARE TO BE DELIVERED TO THE JOB SITE BY THE SUPPLIER IN COILS. THE SUPPLIER WILL THEN FORM THE PANELS ON SITE TO THE SHAPE AND RADIUS OF THE ROOF. THE CONTRACTOR MAY BE REQUIRED TO PROVIDE ADDITIONAL MAN-POWER TO THE SUPPLIER TO AID IN MOVING THE PANELS.

4. NO BUTT SEAMS WILL BE ALLOWED ON THE ROOF. THE PANELS WILL BE FORMED FROM 1 PIECE THAT BEGINS AT THE BOTTOM OF THE ROOF AND CONTINUES ALL THE WAY TO THE RIDGE.

5. NO EXPOSED FASTENERS WILL BE ALLOWED ON THE ROOF PANELS.

6. PANELS MUST BE INSTALLED IN A SEQUENTIAL PATTERN.

7. A 30# ROOFING FELT OR AN APPROVED EQUAL SHOULD BE INSTALLED OVER SUBSTRATE PRIOR TO INSTALLATION OF PANELS AND ALSO BETWEEN THE CONCRETE WALL AND THE GABLE ENDS

8. PANELS MUST BE LOCKED IN THE FIELD BY A MECHANICAL SEAMER.

9. IF PANELS REQUIRE STORAGE BEFORE BEING INSTALLED, THEY SHOULD BE STORED IN A WELL-VENTILATED, DRY PLACE WHERE NO MOISTURE CAN COME IN CONTACT WITH THEM. IF STORED OUTSIDE, COVER WITH VENTED TARP OR WATERPROOF PAPER COVER (NOT PLASTIC). KEEP MATERIAL OFF THE GROUND.

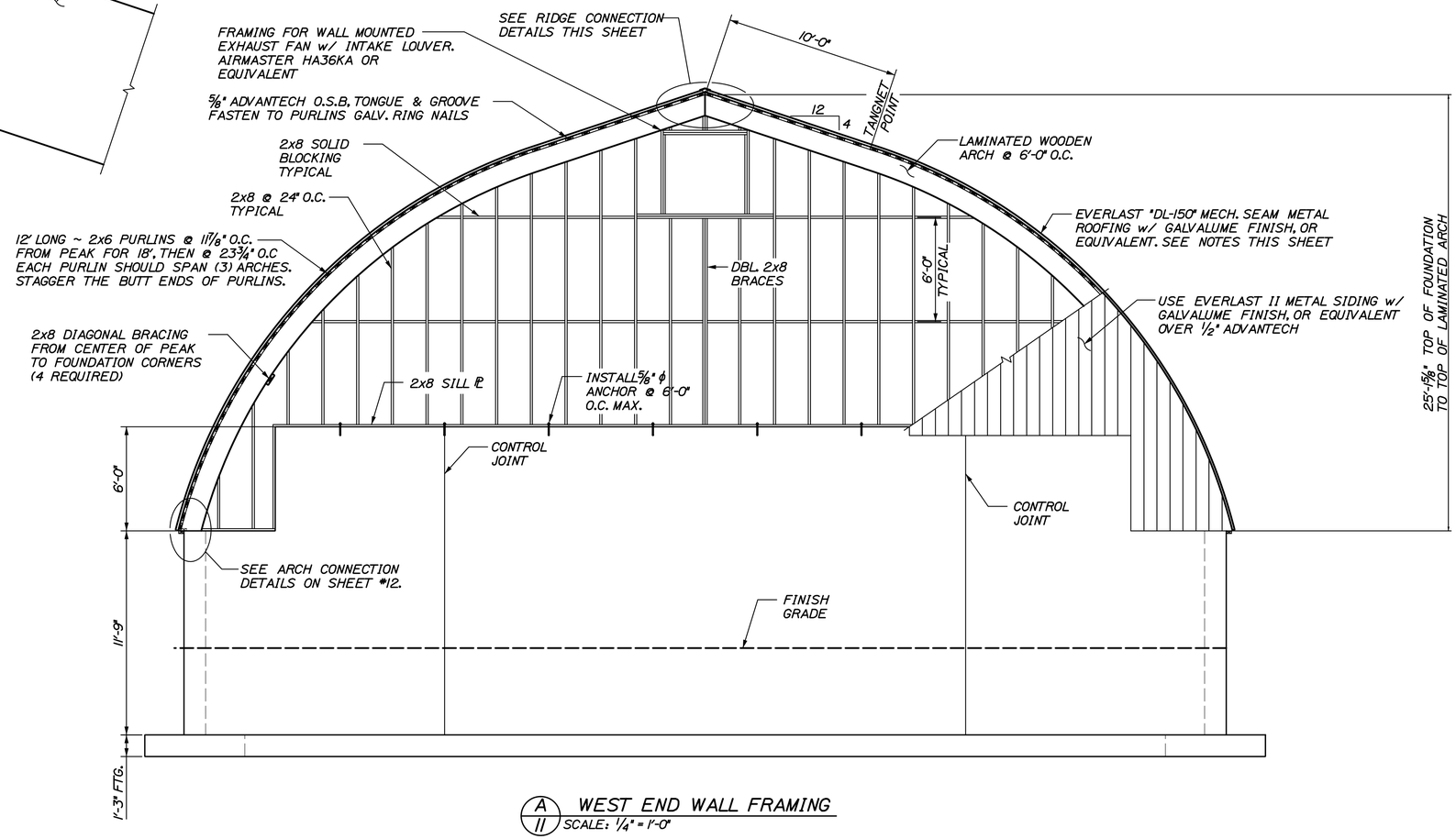

A/11 WEST END WALL FRAMING
SCALE: 1/4" = 1'-0"

CALDERWOOD ENGINEERING, ETC.
STRUCTURAL ENGINEERING • DETAILING SERVICES
222 RIVER RD. RICHMOND, ME 04357 PH/FX (207)737-2007/(207) 737-2008

PREPARED FOR:
STATE OF MAINE DOT

HOULTON, ME SALT SHED
WIN 21248.00

STATE OF MAINE
ERIC J. CALDERWOOD
No. 9099
LICENSED
PROFESSIONAL ENGINEER

9099
P.E. NUMBER

DATE

	BY	DATE
	TEPA	JUNE 2015

DESIGN-DETAILED
CHECKED-REVIEWED
REVISIONS 1
REVISIONS 2
REVISIONS 3
REVISIONS 4
FIELD CHANGES

HOULTON MAINTANANCE SALT SHED

WEST END WALL FRAMING DETAILS

SHEET NUMBER
11
OF 13

CALDERWOOD ENGINEERING
222 RIVER ROAD
RICHMOND, ME 04357
PH. (207)737-2007 FAX (207)737-2008

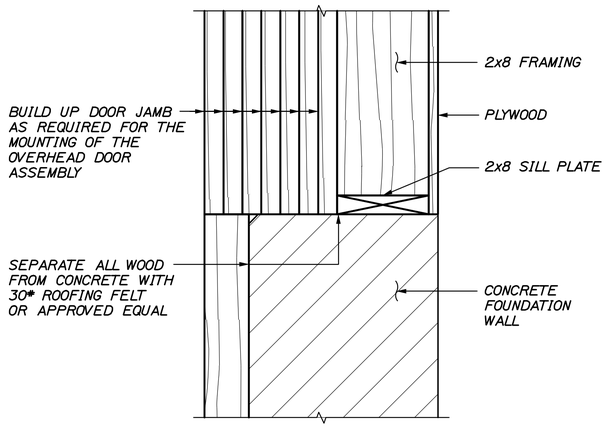

DOOR JAMB DETAIL
2" = 1'-0"

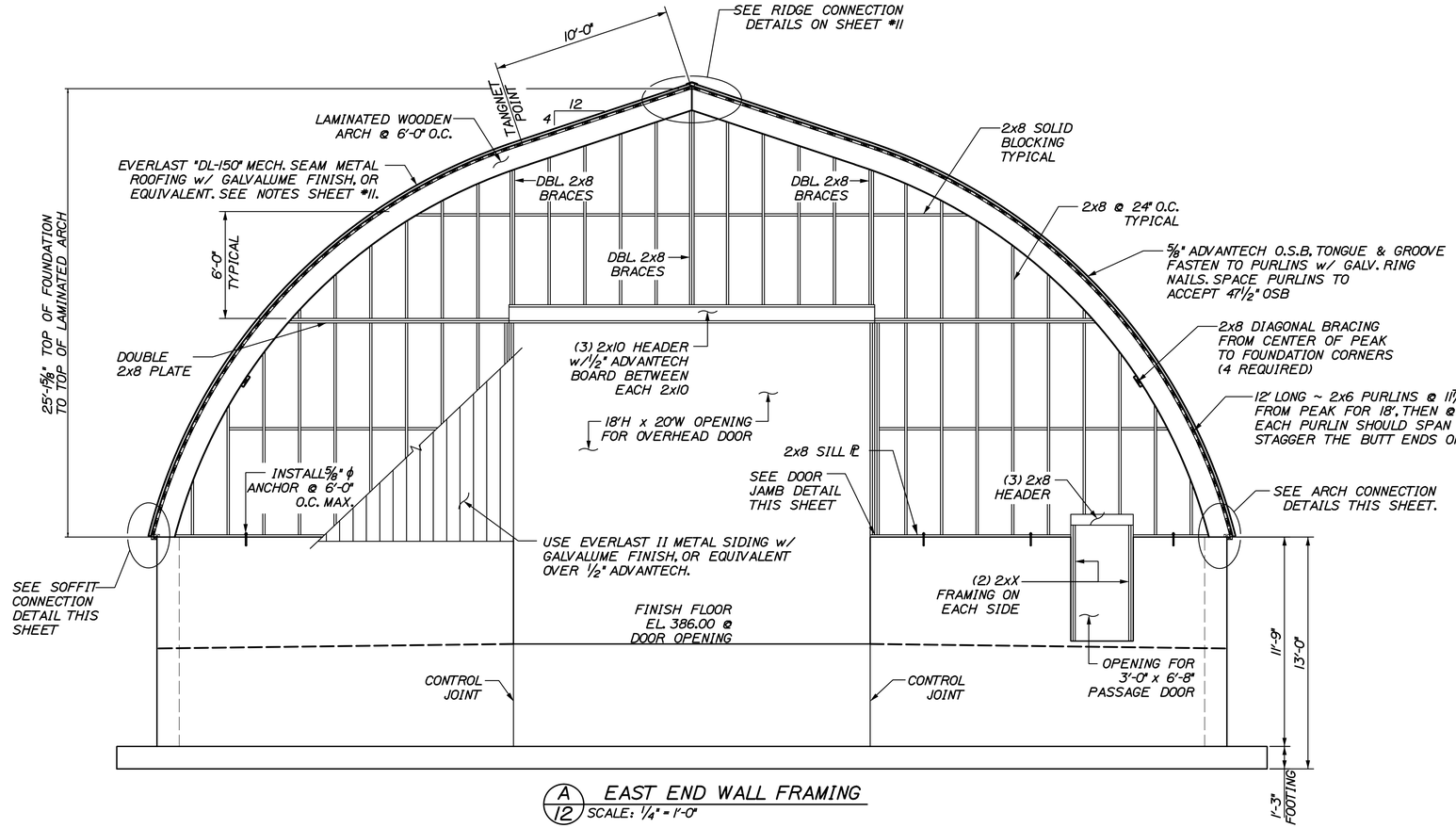

A/12 EAST END WALL FRAMING
SCALE: 1/4" = 1'-0"

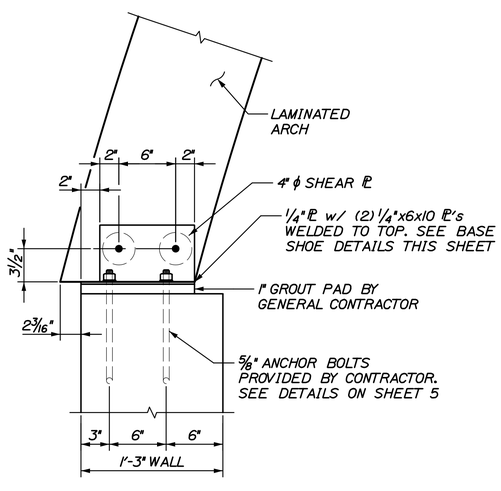

TYPICAL ARCH TO FOUNDATION CONNECTION
SCALE: 1 1/2" = 1'-0"

NOTE:
DEPENDING ON SIZE AND TYPE OF ARCH SELECTED, ANCHOR BOLT LAYOUT MAY CHANGE.
ACTUAL ANCHOR BOLT LAYOUT TO BE COORDINATED WITH THE LAMINATED ARCH MANUFACTURER.
GENERAL CONTRACTOR IS RESPONSIBLE FOR CHECKING LAYOUT OF ANCHOR BOLTS WITH ARCH BASE PLATES TO ENSURE A PROPER FIT.
BASE SHOES, SHEAR ℄'s, AND ARCH BOLTS TO BE DESIGNED AND SUPPLIED BY ARCH MANUFACTURER.

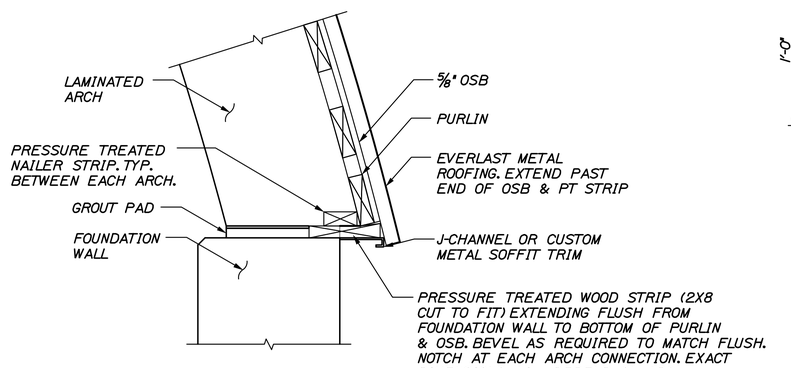

SOFFIT CONNECTION
1 1/2" = 1'-0"

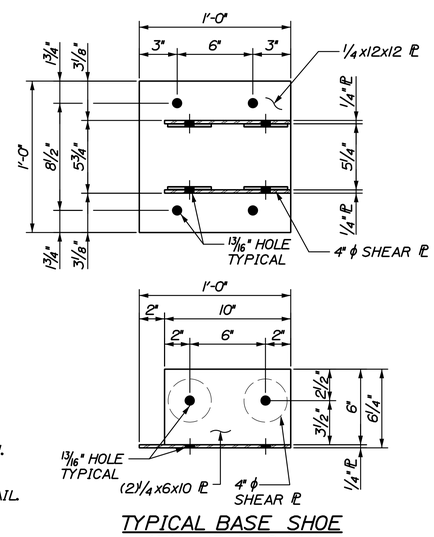

TYPICAL BASE SHOE (EXAMPLE ONLY)
SCALE: 2" = 1'-0"

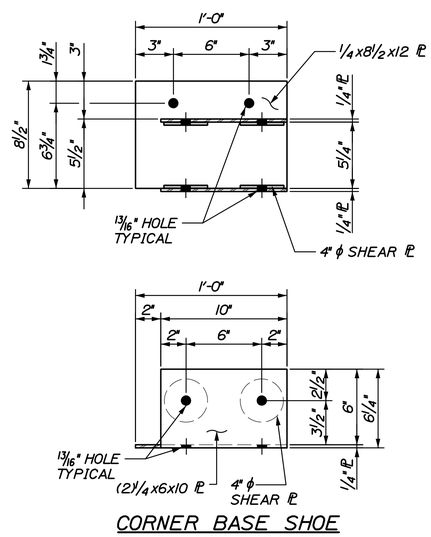

CORNER BASE SHOE (EXAMPLE ONLY)
SCALE: 2" = 1'-0"

NOTE:
BASE SHOES SHOWN ARE EXAMPLES.
COORDINATE WITH ARCH MANUFACTURER FOR ACTUAL SHOES TO BE USED.

CALDERWOOD ENGINEERING, ETC.
STRUCTURAL ENGINEERING • DETAILING SERVICES
222 RIVER RD. RICHMOND, ME 04357 PH/FX (207)737-2007/(207) 737-2008

PREPARED FOR:
STATE OF MAINE DOT
HOULTON, ME SALT SHED
WIN 21248.00

STATE OF MAINE
ERIC J. CALDERWOOD
No. 9099
LICENSED PROFESSIONAL ENGINEER

9099
P.E. NUMBER
DATE

	BY	DATE
DESIGN-DETAILED	TEPA	JUNE 2015
CHECKED-REVIEWED		
REVISIONS 1		
REVISIONS 2		
REVISIONS 3		
REVISIONS 4		
FIELD CHANGES		

HOULTON MAINTANANCE SALT SHED

EAST END WALL FRAMING DETAILS

SHEET NUMBER
12
OF 13

CALDERWOOD ENGINEERING
222 RIVER RD. RICHMOND, ME 04357
TEL. (207)737-2007 FAX (207)737-2008

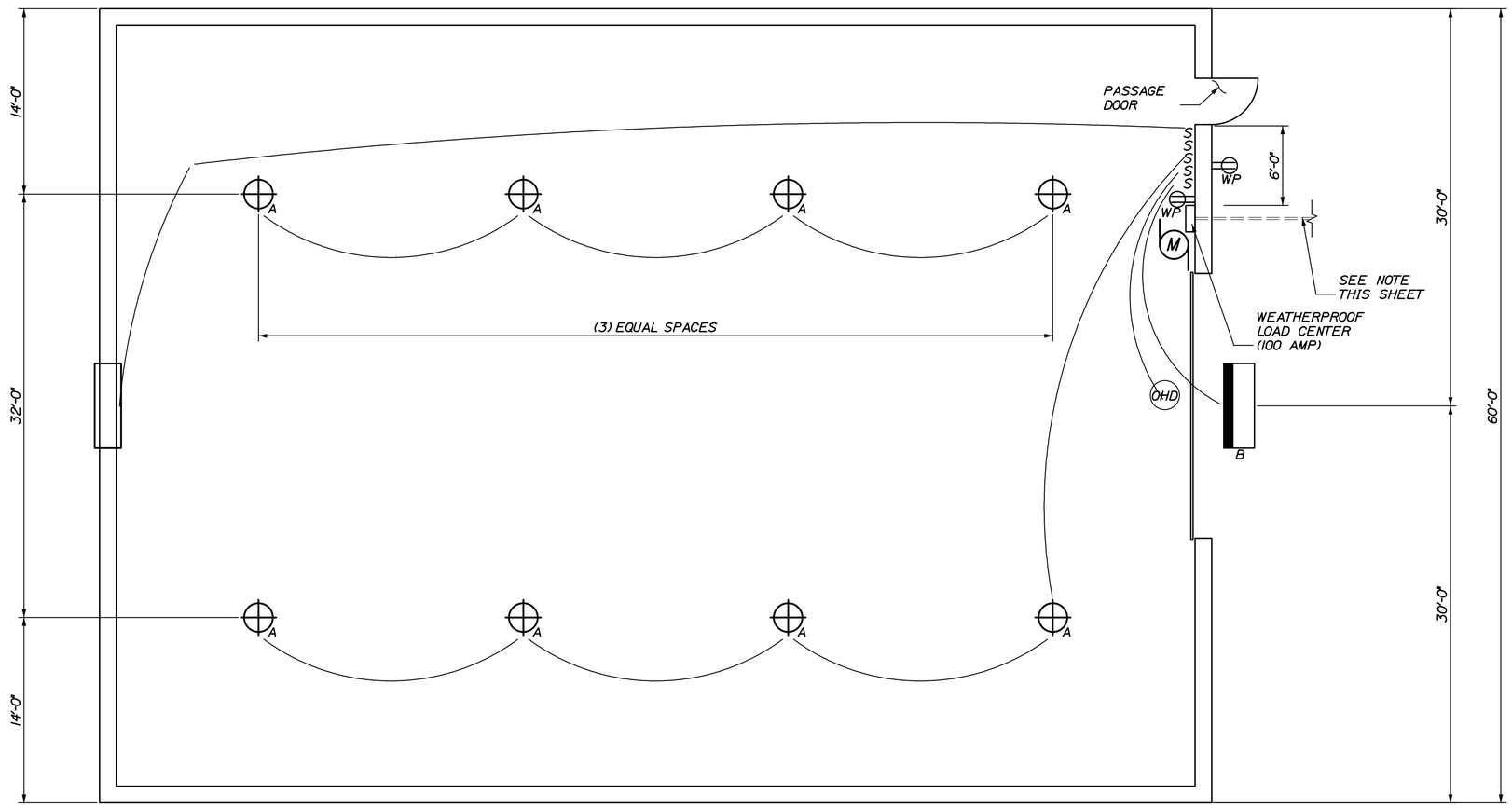

A/13 ELECTRICAL FLOOR PLAN
3/16"=1'-0"

ELECTRICAL LEGEND	
A	H.E. WILLIAMS, FULLY ENCLOSED GASKETED INDUSTRIAL LIGHT FIXTURE. MODEL #96-8-LI30/840-DCL-SSCMB-SSLATCH-DRV W/ ATTACHED HUBBELL FIXTURE MOUNTED OCCUPANCY SENSORS
B	LED FLOOD LIGHT EQUIV TO LITHONIA D-SERIES SIZE 3 W/ PHOTOCELL AND SWITCH
S	WEATHERPROOF SWITCH
WP	GFCI RECEPTACLE W/ WEATHERPROOF COVER
M	OVERHEAD DOOR OPERATOR
	EXHAUST FAN

POWER TO BE INSTALLED UNDERGROUND IF POSIBLE, CONTRACTOR SHALL PRICE AS SUCH.

CONTRACTOR WILL BE REQUIRED TO EXCAVATE, SUPPLY, INSTALL, BACKFILL, AND COMPACT, PER NATIONAL ELECTRICAL CODE (NEC) AN ADDITIONAL 300 FT OF 2" UNDERGROUND CONDUIT. SEE SHEET 2 FOR DETAILS

CONDUIT SHALL BE INSTALLED BELOW GRADE.
EACH END OF CONDUIT SHALL BE CAPPED AND PROTRUDE ABOVE FINISH GRADE BY 2 FEET.

FAN ON BACKWALL, OHD OPENER AND LIGHTS SHALL BE WIRED AND HOOKED UP FOR POWER AS INDICATED.

CALDERWOOD ENGINEERING, ETC.
STRUCTURAL ENGINEERING • DETAILING SERVICES
222 RIVER RD, RICHMOND, ME 04357 PH/FX (207)737-2007/(207) 737-2008

PREPARED FOR:
STATE OF MAINE DOT

HOULTON, ME SALT SHED
WIN 21248.00

STATE OF MAINE
ERIC A. CALDERWOOD
No. 9099
LICENSED
PROFESSIONAL ENGINEER

9099
P.E. NUMBER

DATE

	BY	DATE
DESIGN-DETAILED	TEPA	JUNE 2015
CHECKED-REVIEWED		
REVISIONS 1		
REVISIONS 2		
REVISIONS 3		
REVISIONS 4		
FIELD CHANGES		

HOULTON MAINTANANCE SALT SHED

ELECTRICAL PLAN

SHEET NUMBER
13
OF 13

CALDERWOOD ENGINEERING
222 RIVER RD.
RICHMOND, ME 04357
PH. (207)737-2007 FAX (207)737-2008