STATE OF MAINE
DEPARTMENT OF TRANSPORTATION

SPECIFICATIONS

Design: Load and Resistance Factor Design per AASHTO LRFD Bridge Design Specifications, Sixth Edition 2012 with Interim Specifications through 2015.

DESIGN LOADING

Live Load ..... HL - 93 Modified

TRAFFIC DATA

Current (2013) AADT	560
Future (2033) AADT	670
DHV - % of AADT	10
Design Hour Volume	67
Heavy Trucks (% of AADT)	17
Heavy Trucks (% of DHV)	15
Directional Distribution (% of DHV)	60
18 kip Equivalent P 2.0	116
18 kip Equivalent P 2.5	110
Design Speed (mph)	45

MATERIALS

Concrete:
- Curbs & Transition Barriers ..... Class "LP"
- All Other ..... Class "A"

Reinforcing Steel (Standard) ..... ASTM A 615/A 615M, Grade 60
Reinforcing Steel (Epoxy Coated) ..... ASTM A 775 Grade 60

Structural Steel:
- All Material (except as noted) ..... ASTM A 709, Grade 50W (unpainted)
- High Strength Bolts ..... ASTM A 325, Type 3

BASIC DESIGN STRESSES

Concrete ..... f 'c = 4,000 psi
Reinforcing Steel ..... f y = 60,000 psi

Structural Steel:
- ASTM A 709, Grade 50W ..... F y = 50,000 psi
- ASTM A 709, Grade 36 ..... F y = 36,000 psi
- ASTM A 325 ..... F μ = 120,000 psi

HAYNESVILLE
AROOSTOOK COUNTY
HAYNESVILLE BRIDGE
OVER
MATTAWAMKEAG RIVER
U.S. ROUTE 2A
PROJECT NO. STP-2050(900)
PROJECT LENGTH 0.09 mi.
BRIDGE NO. 5623

LIST OF DRAWINGS

Title Sheet 1
Estimated Quantities & General Construction Notes 2
General Plan 3
Profile 4
Boring Location Plan 5
Interpretive Subsurface Profile 6
Boring Logs 7
Highway Cross Sections 8-16
Staged Construction 17
Abutment No. 1 Modification 18
Abutment No. 2 Modification 19
Abutment No. 2 Modification Reinforcement 20
Disc Bearing Details 21
Framing Plan 22
Girder Elevations
- Span No. 1 23
- Span No. 2 24
- Span No. 3 25

Splice Plate Detail 26
Camber Diagram and Span Stress Diagram 27
Superstructure Section and Superstructure Notes 28
Superstructure Plan 29-30
Superstructure Details 31
Superstructure Section At Abutments And Between Piers 32
Superstructure Section Over Piers 33
Reinforcing Steel Schedule 34

UTILITIES

Eastern Maine Electrical Cooperative
Fairpoint Communications

MAINTENANCE OF TRAFFIC

Maintain one 11'-0" wide lane of alternating two - way traffic using traffic signals and staged construction.

PROJECT LOCATION:	0.2 Miles South of Skagrock Road on US Route 2A (Military Road) Lat. = 45° 49' 49.3" N Long. = 67° 59' 08.7" W
PROGRAM AREA:	Bridge Program
OUTLINE OF WORK:	Bridge Superstructure Replacement

STATE OF MAINE
DEPARTMENT OF TRANSPORTATION
APPROVED
COMMISSIONER: DATE 4/19/16
CHIEF ENGINEER: DATE 4-19-16

STATE OF MAINE Michael Harry Wight 8089 LICENSED PROFESSIONAL ENGINEER
SIGNATURE 8089
P.E. NUMBER
DATE 4/12/2016

PROJECT INFORMATION
PROGRAM: BRIDGE
PROJECT MANAGER: MICHAEL WIGHT
DESIGNER: TYLER HJELM
CONSULTANT:
PROJECT RESIDENT:
CONTRACTOR:
PROJECT COMPLETION DATE:

WIN 20509.00
STP-2050(900)

HAYNESVILLE
HAYNESVILLE BRIDGE

TITLE SHEET

SHEET NUMBER
1
OF 34

Filename:\00\BRIDGE\MSTA\001_Title.dgn Division: BRIDGE Username: mark.poulin Date:4/12/2016

ESTIMATED QUANTITIES

ITEM NO.	DESCRIPTION	QUANTITY	UNIT
202.10	REMOVING EXISTING SUPERSTRUCTURE (290 CY)	1	LS
	(PROPERTY OF CONTRACTOR)		
202.17	REMOVING EXISTING STRUCTURAL CONCRETE (30 CY)	1	LS
202.202	REMOVING PAVEMENT SURFACE	530	SY
203.20	COMMON EXCAVATION	850	CY
203.24	COMMON BORROW	10	CY
304.10	AGGREGATE SUBBASE COURSE - GRAVEL	690	CY
403.208	HOT MIX ASPHALT 12.5 MM HMA SURFACE	220	T
403.211	HOT MIX ASPHALT (SHIMMING)	15	T
403.213	HOT MIX ASPHALT 12.5 MM BASE	260	T
409.15	BITUMINOUS TACK COAT - APPLIED	160	G
461.131	TEMPORARY PAVEMENT	5	T
502.21	STRUCTURAL CONCRETE, ABUTMENTS AND RETAINING WALLS	20	CY
502.26	STRUCTURAL CONC. ROADWAY AND SIDEWALK SLABS (260 CY)	1	LS
	ON STEEL BRIDGES		
502.31	STRUCTURAL CONCRETE APPROACH SLABS (22 CY)	1	LS
502.49	STRUCTURAL CONCRETE CURBS AND SIDEWALKS (35 CY)	1	LS
503.12	REINFORCING STEEL, FABRICATED AND DELIVERED	88800	LB
503.13	REINFORCING STEEL, PLACING	88800	LB
503.14	EPOXY-COATED REINFORCING STEEL, FABRICATED AND DELIVERED	6700	LB
503.15	EPOXY-COATED REINFORCING STEEL, PLACING	6700	LB
503.17	MECHANICAL WELDED SPLICE	1177	EA
504.702	STRUCTURAL STEEL FABRICATED AND DELIVERED, WELDED (32,300 LB)	1	LS
504.71	STRUCTURAL STEEL ERECTION (32,300 LB)	1	LS
505.08	SHEAR CONNECTORS (3,300 EA)	1	LS
507.0811	STEEL BRIDGE RAILING, 2 BAR (550 LF)	1	LS
508.14	HIGH PERFORMANCE WATERPROOFING MEMBRANE (960 SY)	1	LS
514.06	CURING BOX FOR CONCRETE CYLINDERS	1	EA
515.21	PROTECTIVE COATING FOR CONCRETE SURFACES (340 SY)	1	LS
520.21	EXPANSION DEVICE - GLAND SEAL	1	EA
520.232	EXPANSION DEVICE - ASPHALTIC PLUG JOINT	33	LF
523.52	BEARING INSTALLATION	24	EA
523.5551	POT OR DISC BEARINGS, FIXED	6	EA
523.5552	POT OR DISC BEARINGS, EXPANSION	18	EA
524.301	TEMPORARY STRUCTURAL SUPPORT	1	LS
526.301	TEMPORARY CONCRETE BARRIER TYPE I (560 LF)	1	LS
526.34	PERMANENT CONCRETE TRANSITION BARRIER	4	EA
527.34	WORK ZONE CRASH CUSHIONS	4	UN
606.1721	BRIDGE TRANSITION - TYPE I	4	EA
606.23	GUARDRAIL TYPE 3C - SINGLE RAIL	237.5	LF
606.353	REFLECTORIZED FLEXIBLE GUARDRAIL MARKER	8	EA
606.79	GUARDRAIL 350 FLARED TERMINAL	4	EA
610.16	HEAVY RIPRAP	340	CY
613.319	EROSION CONTROL BLANKET	180	SY
615.07	LOAM	35	CY
618.14	SEEDING METHOD NUMBER 2	6	UN
619.1201	MULCH - PLAN QUANTITY	6	UN
619.1401	EROSION CONTROL MIX	70	CY
620.58	EROSION CONTROL GEOTEXTILE	470	SY
627.733	4" WHITE OR YELLOW PAINTED PAVEMENT MARKING LINE	2800	LF
627.76	TEMPORARY PAVEMENT MARKING LINE, WHITE OR YELLOW (1400 LF)	1	LS
627.77	REMOVING PAVEMENT MARKINGS	930	SF
629.05	HAND LABOR, STRAIGHT TIME	40	HR
631.12	ALL PURPOSE EXCAVATOR (INCLUDING OPERATOR)	40	HR
631.14	GRADER (INCLUDING OPERATOR)	10	HR
631.15	ROLLER, EARTH AND BASE COURSE (INCLUDING OPERATOR)	20	HR
631.172	TRUCK - LARGE (INCLUDING OPERATOR)	20	HR
631.21	ROAD BROOM (INCLUDING OPERATORS AND HAULERS)	20	HR
631.212	SMALL PAVEMENT GRINDER (INCLUDING OPERATOR)	20	HR
639.19	FIELD OFFICE TYPE B	1	EA
643.72	TEMPORARY TRAFFIC SIGNAL	1	LS
652.31	TYPE I BARRICADE	4	EA
652.312	TYPE III BARRICADE	6	EA
652.33	DRUM	60	EA
652.34	CONE	120	EA
652.35	CONSTRUCTION SIGNS	190	SF
652.361	MAINTENANCE OF TRAFFIC CONTROL DEVICES (180 CD)	1	LS
652.38	FLAGGER	250	HR
652.41	PORTABLE CHANGEABLE MESSAGE SIGN	2	EA
656.75	TEMPORARY SOIL EROSION AND WATER POLLUTION CONTROL	1	LS
659.10	MOBILIZATION	1	LS

GENERAL CONSTRUCTION NOTES

1. During construction, the road will be closed to traffic for a time period specified in the Special Provisions.

2. For easements, construction limits and right of way lines, refer to Right of Way Map.

3. Do not excavate for Aggregate Subbase Course where existing material is suitable as determined by the Resident.

4. In areas where the Resident directs the Contractor not to excavate to the subgrade line shown on the plans, payment for removing existing pavement, grubbing, shaping, ditching, and compacting the existing subbase and layers of new subbase 6 inches or less thick will be made under appropriate equipment rental items.

5. Place loam 2 inches deep on all new or reconstructed sideslopes or as directed by the Resident.

6. Erosion Control Mix may be substituted in those areas normally receiving loam and seed as directed by the Resident. Placement shall be in accordance with Standard Specifications Section 619, Mulch. Payment will be made under Item No. 619.1401, Erosion Control Mix.

7. Extended-use Erosion Control Blanket, seeded gutters, riprap downspouts, and other gutters lined with Stone Ditch Protection shall be constructed after paving and shoulder work is completed, where it is apparent that runoff will cause continual erosion. Payment will be made under the appropriate Contract items.

8. Protective Coating for Concrete Surfaces shall be applied to the following areas:

All exposed surfaces of concrete curbs and sidewalks.
Fascias down to the drip notch.
All exposed surfaces of Concrete Transition Barriers.
Top of abutment backwalls and to one foot below the top of backwalls on the back side.

9. Project information referred to below may be accessed at the following MaineDOT web address: http://www.maine.gov/mdot/contractors/.

10. The existing bridge plans may be accessed at the MaineDOT web address. The plans are reproductions of the original drawings as prepared for the construction of the bridge. It is very unlikely that the plans will show any construction field changes or any alterations which may have been made to the bridge during its life span.

11. The project geotechnical report titled: Haynesville Bridge, Haynesville, Maine, Soils Report No. 2015-27, Date: October 30, 2015 may be accessed at the MaineDOT web address.

12. Geotechnical information furnished or referred to in this plan set is for the use of the Bidders and the Contractor. No assurance is given that the information or interpretations will be representative of actual subsurface conditions at the construction site. MaineDOT will not be responsible for the Bidders' or Contractor's interpretations of, or conclusions drawn from, the geotechnical information. The boring logs contained in the plan set present factual and interpretive subsurface information collected at discrete locations. Data provided may not be representative of the subsurface conditions between the boring locations.

13. Quantities included for pay items measured and paid for by Lump Sum are estimated quantities and are provided by MaineDOT for informational purposes only. Lump Sum pay items will be paid for at the Contract Bid amount, with no addition or reduction in payment to the Contractor if the actual final quantities are different from the MaineDOT provided estimated quantities, except as follows:

a. If a Lump Sum pay item is eliminated, the requirements of Standard Specifications Section 109.2, Elimination of Items, will take precedence.

b. If other Contract Documents specifically allow a change in payment for a Lump Sum pay item, those requirements will be followed.

c. If a design change results in changes to estimated quantities for Lump Sum pay items, price adjustments will be made in accordance with Standard Specifications Section 109.7, Equitable Adjustments to Compensation.

14. The Contractor shall submit a Bridge Demolition Plan to the Resident at least 10 business days prior to the start of demolition work. The plan shall outline the methods and equipment to be used to remove and dispose of all materials included in the existing bridge. No work related to the removal of the bridge shall be undertaken by the Contractor until MaineDOT has reviewed the Bridge Demolition Plan for appropriateness and completeness. Payment for all work necessary for developing, submitting and finalizing the Demolition Plan will be considered incidental to the bridge removal pay item.

15. The existing superstructure shall be removed by and become the property of the Contractor except as otherwise indicated in the Special Provisions. The steel portions of the existing bridge are coated with a lead-based paint system. The Contractor is responsible for the containment, proper management and disposal of all lead-contaminated hazardous waste generated by the process of demolishing the bridge. The Contractor is responsible for implementing appropriate OSHA mandated personal protection standards related to this process. Once the existing bridge is removed, the Contractor is solely responsible for the care, custody and control of the components of the existing bridge and any hazardous waste generated as a result of the storage, recycling or disposal of the bridge components, including lead-coated steel. The Contractor shall recycle or reuse the steel in accordance with the Maine Department of Environmental Protection's "Maine Hazardous Waste Management Regulations," Chapter 850. A copy of this regulation is available at MaineDOT's offices on Child Street in Augusta. Payment for all labor, materials, equipment and other costs required to remove and dispose of the existing bridge will be considered incidental to the bridge removal pay item.

16. Any additional excavation needed to perform the proposed abutment work will be covered under Item No. 203.20 - Common Excavation.

17. Removal of existing cable guardrail along with filling any holes from the guardrail post at the south east corner of the bridge shall not be paid for directly. Payment shall be considered incidental to related contract items.

STATE OF MAINE
DEPARTMENT OF TRANSPORTATION

STP-2050(900)

WIN 20509.00

BRIDGE NO. 5823

BRIDGE PLANS

PROJ. MANAGER	M. WIGHT	BY	DATE
DESIGN-DETAILED	T. HJELM	LIBBY MRP	JULY 2015
CHECKED-REVIEWED	B. REEVES	B. REEVES	B. REEVES
DESIGN2-DETAILED2			
DESIGN3-DETAILED3			
REVISIONS 1			
REVISIONS 2			
REVISIONS 3			
REVISIONS 4			
FIELD CHANGES			

SIGNATURE

P.E. NUMBER

DATE

HAYNESVILLE BRIDGE
MATTAWAMKEAG RIVER
HAYNESVILLE AROOSTOOK COUNTY

ESTIMATED QUANTITIES

SHEET NUMBER
2
OF 34

Filename: ...\002_Estimate_General_Con_Notes.dgn Division: BRIDGE Username: david.sullivan Date:4/19/2016

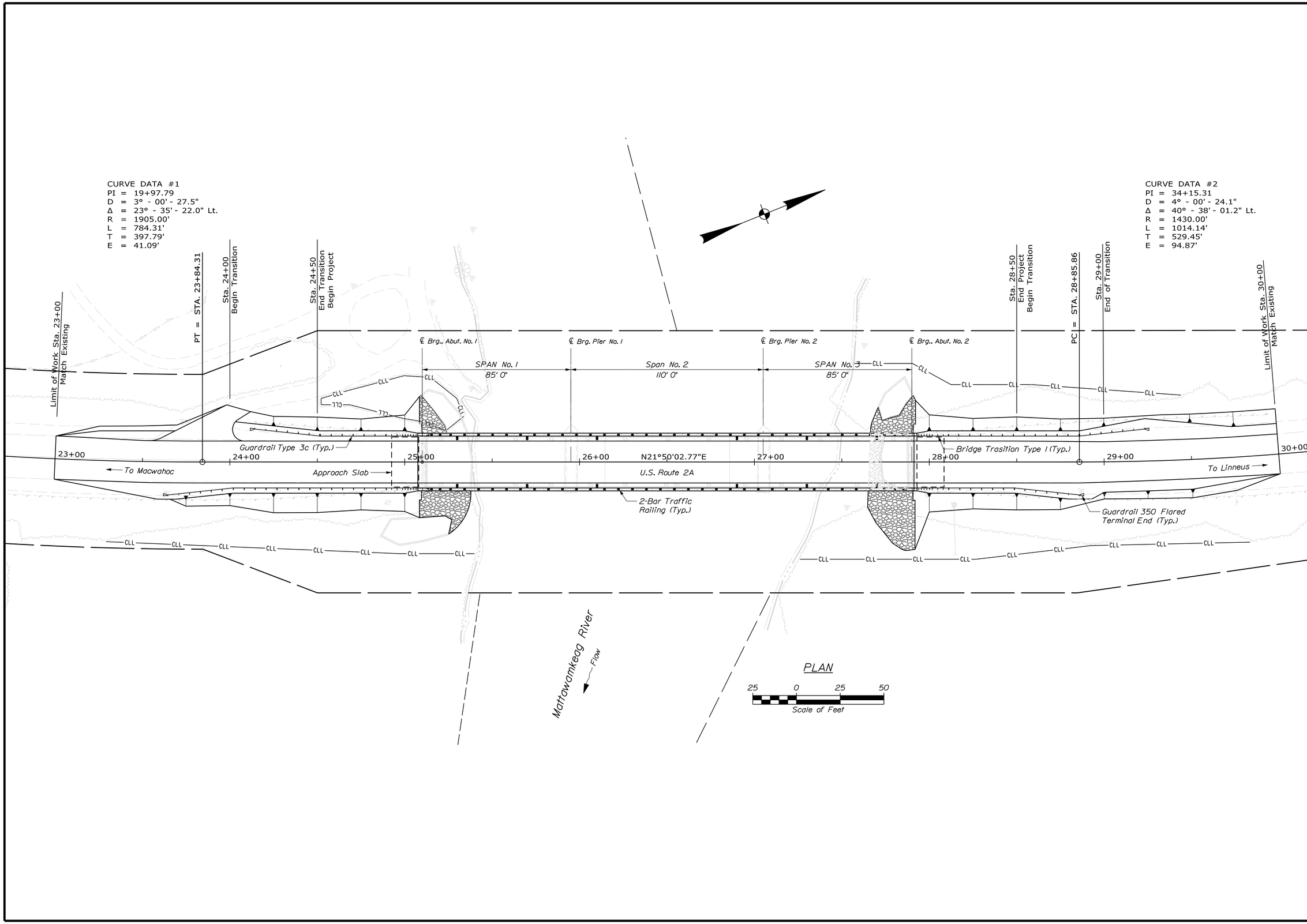

STATE OF MAINE
DEPARTMENT OF TRANSPORTATION

STP-2050(900)

WIN 20509.00

BRIDGE NO. 5823

BRIDGE PLANS

		BY	DATE
PROJ. MANAGER	M. WIGHT		
DESIGN-DETAILED	T. HJELM	LIBBY/MRP	DMR 2015
CHECKED-REVIEWED	B REEVES	B REEVES	B REEVES
DESIGN2-DETAILED2			
DESIGN3-DETAILED3			
REVISIONS 1			
REVISIONS 2			
REVISIONS 3			
REVISIONS 4			
FIELD CHANGES			

SIGNATURE

P.E. NUMBER

DATE

HAYNESVILLE BRIDGE
MATTAWAMKEAG RIVER
HAYNESVILLE AROOSTOOK COUNTY

GENERAL PLAN

SHEET NUMBER

3

OF 34

Filename: ...\00\BRIDGE\MSTA\003_BDPlan1.dgn Division: BRIDGE Username: david.sullivan Date:4/15/2016

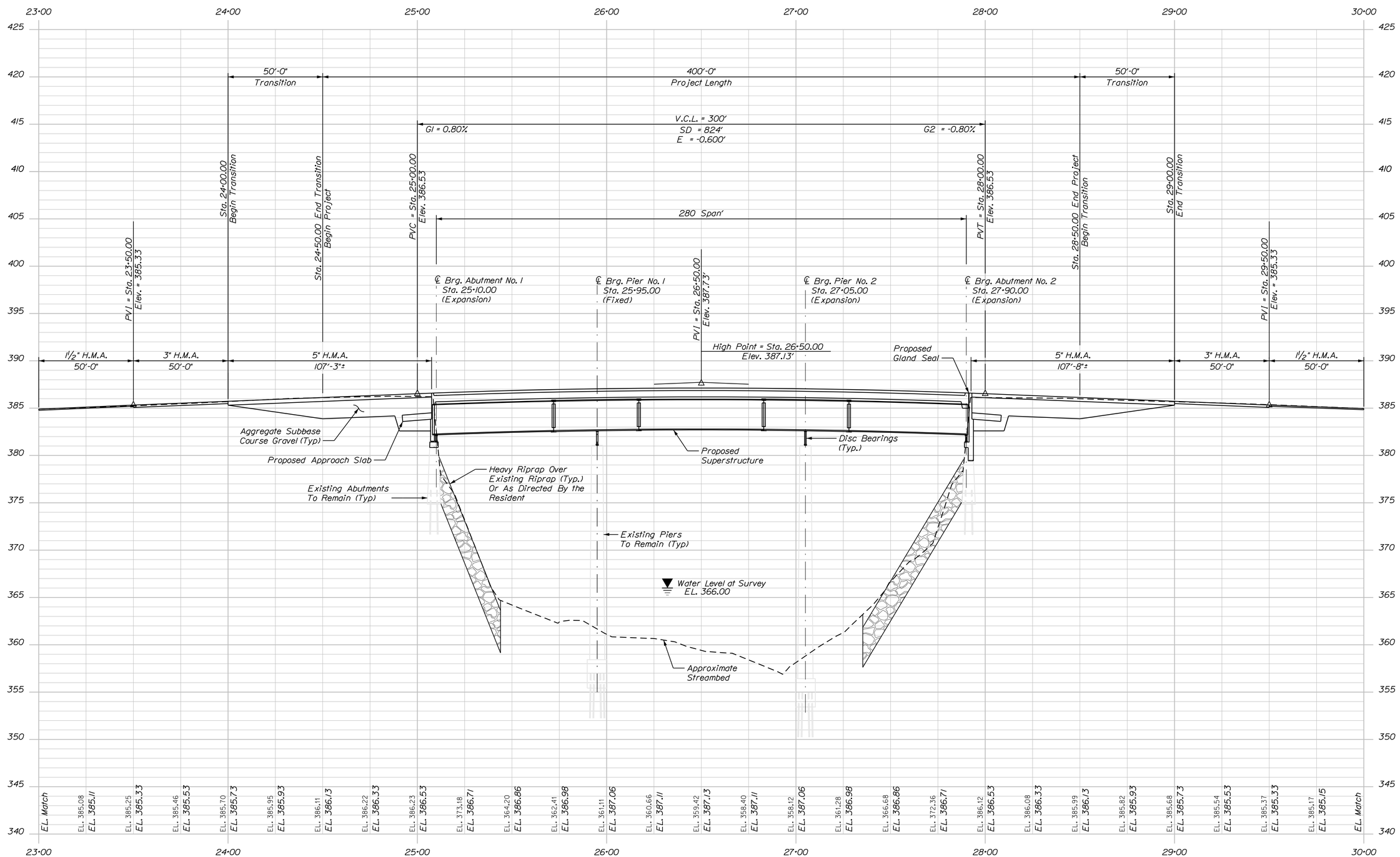

PROFILE

Horiz. 25 0 25 50

Vert. 5 0 5 10

Scale of Feet

STATE OF MAINE
DEPARTMENT OF TRANSPORTATION

STP-2050(900)

WIN 20509.00

BRIDGE NO. 5823

BRIDGE PLANS

PROJ. MANAGER	M. WIGHT	BY	DATE
DESIGN-DETAILED	T. HJELM	LIBBY/MRP	MAR 2015
CHECKED-REVIEWED	B. REEVES	B. REEVES	B. REEVES
DESIGN2-DETAILED2			
DESIGN3-DETAILED3			
REVISIONS 1			
REVISIONS 2			
REVISIONS 3			
REVISIONS 4			
FIELD CHANGES			

SIGNATURE

P.E. NUMBER

DATE

HAYNESVILLE BRIDGE
MATTAWAMKEAG RIVER
HAYNESVILLE AROOSTOOK COUNTY

PROFILE

SHEET NUMBER

4

OF 34

Filename: ...\00\BRIDGE\MSTA\004_Profile.dgn Division: BRIDGE Username: david.sullivan Date:4/15/2016

Filename: ...\00\GEOTECH\MSTA\005_BLP1.dgn Division: BRIDGE Username: david.sullivan Date:4/15/2016

CURVE DATA #1
PI = 19+97.79
D = 3° - 00' - 27.5"
Δ = 23° - 35' - 22.0" Lt.
R = 1905.00'
L = 784.31'
T = 397.79'
E = 41.09'

CURVE DATA #2
PI = 34+15.31
D = 4° - 00' - 24.1"
Δ = 40° - 38' - 01.2" Lt.
R = 1430.00'
L = 1014.14'
T = 529.45'
E = 94.87'

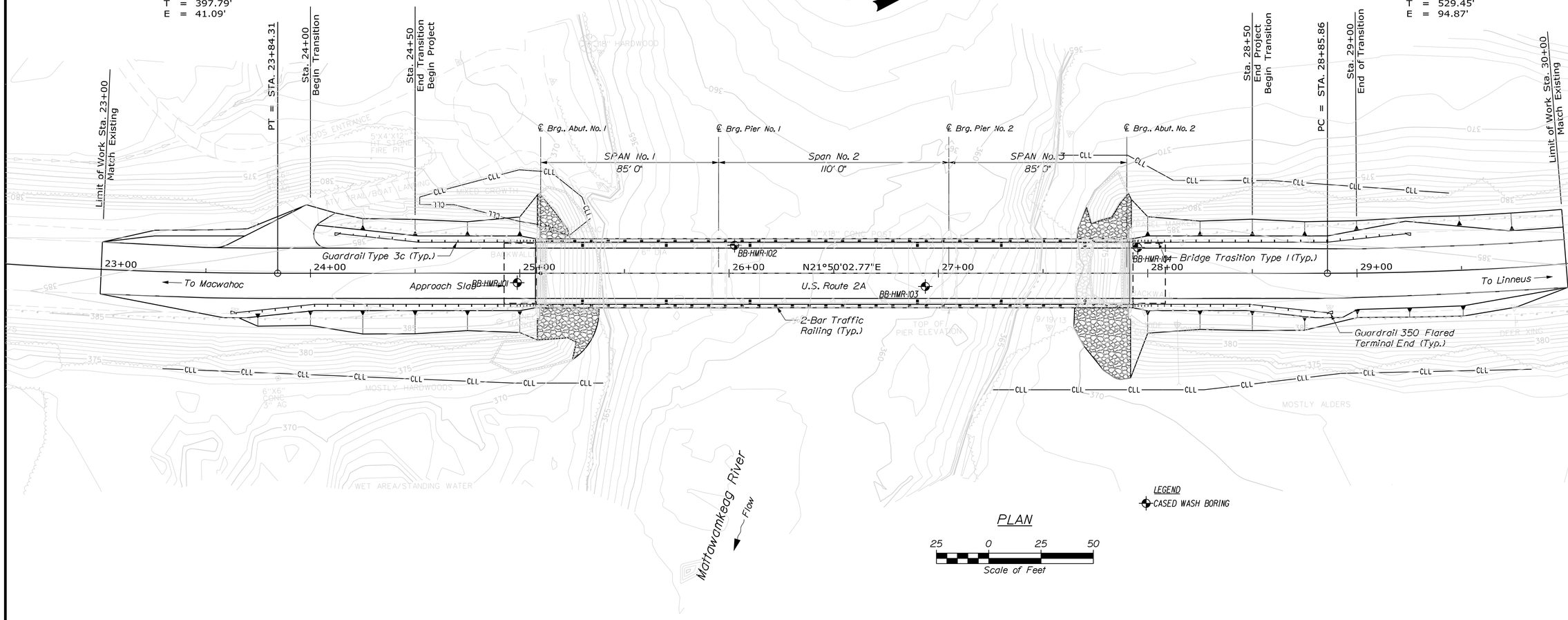

PLAN

25 0 25 50
Scale of Feet

LEGEND
CASED WASH BORING

STATE OF MAINE
DEPARTMENT OF TRANSPORTATION

STP-2050(900)

WIN 20509.00

BRIDGE NO. 5823

BRIDGE PLANS

		BY	DATE
PROJ. MANAGER	S. BODGE		
DESIGN-DETAILED	R. MYERS	G. LIBBY	
CHECKED-REVIEWED	R. MEYERS	-----	
DESIGN2-DETAILED2	L.KRUSINSKI	T.WHITE	JUN 2014
DESIGN3-DETAILED3	------	------	------
REVISIONS 1	------	------	------
REVISIONS 2	------	------	------
REVISIONS 3	------	------	------
REVISIONS 4	------	------	------
FIELD CHANGES	------	------	------

SIGNATURE

P.E. NUMBER

DATE

HAYNESVILLE BRIDGE
MATTAWAMKEAG RIVER
HAYNESVILLE AROOSTOOK COUNTY

BORING LOCATION PLAN

SHEET NUMBER
5
OF 34

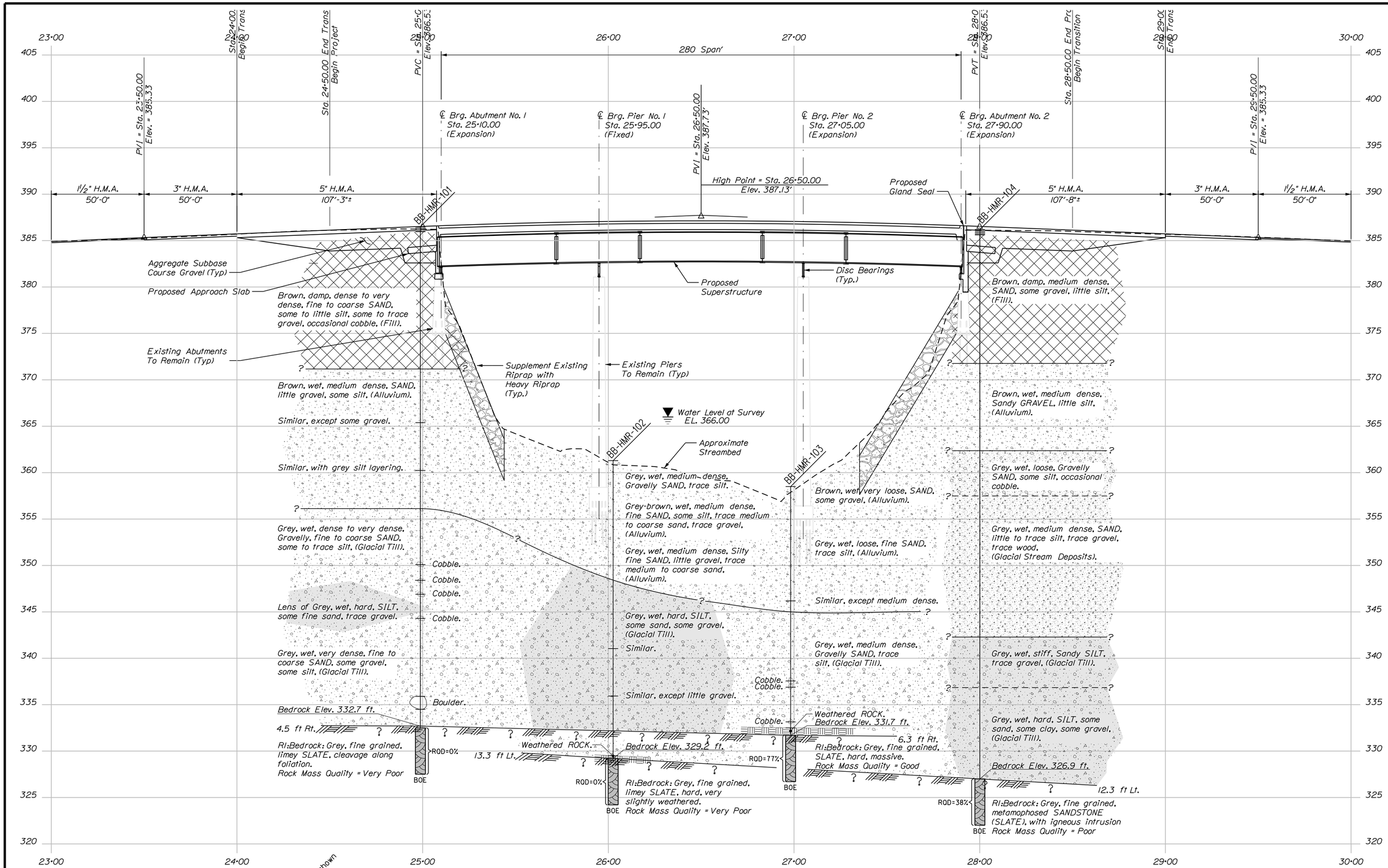

LEGEND

Weathered ROCK

Top of Intack Bedrock

Boring

Boring No. Offset, if shown

Pavement Thickness if applicable

Strata Interface

ROD= Rock Quality Designation for Rock Core Sample

BOE= Bottom Of Exploration

PROFILE

HORIZ 25 0 25 50

VERT 5 0 5 10

SCALE

Note: This generalized interpretive soil profile is intended to convey trends in subsurface conditions. The boundaries between strata are approximate and idealized, and have been developed by interpretations of widely spaced explorations and samples. Actual soil transitions may vary and are probably more erratic. For more specific information refer to the exploration logs.

STATE OF MAINE
DEPARTMENT OF TRANSPORTATION

STP-2050(900)

WIN 20509.00

BRIDGE NO. 5823

BRIDGE PLANS

		BY	DATE
PROJ. MANAGER	S. BODGE		
DESIGN-DETAILED	R. MYERS	G. LIBBY	
CHECKED-REVIEWED	R. MEYERS	-----	-----
DESIGN2-DETAILED2	L.KRUSINSKI	T.WHITE	SEPT 2015
DESIGN3-DETAILED3	-----	-----	-----
REVISIONS 1	-----	-----	-----
REVISIONS 2	-----	-----	-----
REVISIONS 3	-----	-----	-----
REVISIONS 4	-----	-----	-----
FIELD CHANGES	-----	-----	-----

SIGNATURE

P.E. NUMBER

DATE

HAYNESVILLE BRIDGE
MATTAWAMKEAG RIVER
HAYNESVILLE AROOSTOOK COUNTY

INTERPRETIVE SUBSURFACE PROFILE

SHEET NUMBER

6

OF 34

Filename: ...\00\GEOTECH\MSTA\006_ISP1.dgn Division: BRIDGE Username: david.sullivan Date:4/15/2016

Filename: ...\MSTA\007_BORING LOGS1.dgn Division: BRIDGE Username: david.sullivan Date:4/15/2016

Maine Department of Transportation — Soil/Rock Exploration Log — US CUSTOMARY UNITS

Project: Haynesville Bridge #5623 carries US Route 2A over Mattawamkeag
Location: Haynesville, Maine
WIN: 20509.00

Boring No.: BB-HMR-101

Driller: MaineDOT	Elevation (ft.) 386.5	Auger ID/OD: 5" Solid Stem	
Operator: Giles/Daggett/Giles	Datum: NAVD88	Sampler: Standard Split Spoon	
Logged By: B. Wilder	Rig Type: CME 45C	Hammer Wt./Fall: 140#/30"	
Date Start/Finish: 6/11/2014-6/12/2014	Drilling Method: Cased Wash Boring	Core Barrel: NQ-2	
Boring Location: 24+98.0, 4.5 ft Rt.	Casing ID/OD: NW	Water Level*: 20.0 ft bgs.	
Hammer Efficiency Factor: 0.867	Hammer Type: Automatic ☒ Hydraulic ☐ Rope & Cathead ☐		

Definitions:
D = Split Spoon Sample
MD = Unsuccessful Split Spoon Sample attempt
U = Thin Wall Tube Sample
MU = Unsuccessful Thin Wall Tube Sample attempt
V = Insitu Vane Shear Test, PP = Pocket Penetrometer
MV = Unsuccessful Insitu Vane Shear Test attempt
R = Rock Core Sample
SSA = Solid Stem Auger
HSA = Hollow Stem Auger
RC = Roller Cone
WOH = weight of 140lb. hammer
WOR/C = weight of rods or casing
WO1P = Weight of one person
S_u = Insitu Field Vane Shear Strength (psf)
S_r = Pocket Torvane Shear Strength (psf)
q_p = Unconfined Compressive Strength (ksf)
N-uncorrected = Raw Field SPT N-value
Hammer Efficiency Factor = Annual Calibration Value
N_{60} = SPT N-uncorrected corrected for hammer efficiency
N_{60} = (Hammer Efficiency Factor/60%)*N-uncorrected
$S_{u(lab)}$ = Lab Vane Shear Strength (psf)
WC = water content, percent
LL = Liquid Limit
PL = Plastic Limit
PI = Plasticity Index
G = Grain Size Analysis
C = Consolidation Test

Depth (ft.)	Sample No.	Pen./Rec. (in.)	Sample Depth (ft.)	Blows (/6 in. Penetration Resistance) or RQD (%)	N-uncorrected	N_{60}	Casing Blows	Elevation (ft.)	Visual Description and Remarks	Laboratory Testing Results/ AASHTO and Unified Class
0							SSA	385.96	6.5" PAVEMENT. (0.54)	
	1D	24/19	1.00 - 3.00	17/16/13/11	29	42			Brown, damp, dense, gravelly, fine to coarse SAND, little silt, occasional cobbles. (Fill).	
5	2D/A	24/16	5.00 - 7.00	3/23/46/10	69	100			2D (5.0-6.5 ft bgs) Brown, damp, very dense, fine to coarse SAND, some gravel, little silt, occasional cobble. (Fill). (6.50) 2D/A (6.5-7.0 ft bgs) Brown, moist, silty, fine to coarse SAND, some gravel. (Fill). (0.00)	GM243186 A-1-b, SM WC=7.1%
								380.00 / 379.50		
10	3D	24/15	10.00 - 12.00	5/6/5/7	15	22	24		Brown, damp, medium dense, fine to coarse SAND, some gravel, some silt, occasional cobble. (Fill).	
							30			
							33			
							34			
							34	371.50		
15	4D	24/14	15.00 - 17.00	9/9/9/10	18	26	21		Brown, wet, medium dense, fine to coarse SAND, little gravel, some silt. (Alluvium). (15.00)	
							37			
							61			
							53			
20	5D	24/14	20.00 - 22.00	4/4/4/4	8	12	9		Brown, wet, medium dense, fine to coarse SAND, some gravel, little silt, (similar to 4D). (Alluvium).	GM243187 A-1-b, SM WC=17.1%
							27			
							22			
							42			
							54			
25	6D	24/13	25.00 - 27.00	9/9/10/15	19	27	23		Similar to above, with iron staining, some grey silt layering.	
							57			
							53			
							52			
							92	357.00		
30	7D	24/10	30.00 - 32.00	16/14/9/11	23	33	33		Grey, wet, dense, Gravelly, fine to coarse SAND, some silt. (Glacial Till). (29.50)	
							59			
							62			
							57			
							69			
35	8D	12/4	35.00 - 36.00	20/60	---		46		Grey, wet, very dense, Gravelly, fine to coarse SAND, trace silt. (Glacial Till).	
							333			
							177			
							140			
							191	346.50		
40	9D	24/13	40.00 - 42.00	11/21/26/50	47	68	35		Grey, wet, hard, SILT, some fine sand, trace gravel. (40.00)	GM243188 A-4, CL WC=15.4%
							219			
							289			
							342			
							52			
45	10D	24/14	45.00 - 47.00	6/17/28/2245	45	65	67		Grey, wet, very dense, fine to coarse SAND, some gravel, some silt. (Glacial Till).	GM243189 A-2-4, SM WC=9.3%
							112			
							257			
							274			
							156			
50	WD	1.2/0	50.50 - 50.60	50(1.2")	---		970		970 blows for 0.5 ft. Boulder from 50.6-52.0 ft bgs.	
								332.70 / 332.50		
	R1	60/59	54.00 - 59.00	RQD = 0%			NQ-2		Top of Bedrock at Elev. 332.7 ft. (53.80) R1:Bedrock: Grey, fine grained, limey SLATE, occassional calcite veins, microfaults evidence rock has be sheared, no apparent jointings cleavage along foliation. Allsbury Formation. Rock Mass Quality = Very Poor. R1:Core Times (min:sec) 54.0-55.0 ft (7:113) 55.0-56.0 ft (4:135) 56.0-57.0 ft (5:140) 57.0-58.0 ft (5:117) 58.0-59.0 ft (8:107) 98% Recovery (54.00)	
55								327.50	Bottom of Exploration at 59.00 feet below ground surface. (59.00)	

Remarks:

Stratification lines represent approximate boundaries between soil types; transitions may be gradual.

* Water level readings have been made at times and under conditions stated. Groundwater fluctuations may occur due to conditions other than those present at the time measurements were made.

Page 1 of 1

Boring No.: BB-HMR-101

Maine Department of Transportation — Soil/Rock Exploration Log — US CUSTOMARY UNITS

Project: Haynesville Bridge #5623 carries US Route 2A over Mattawamkeag
Location: Haynesville, Maine
WIN: 20509.00

Boring No.: BB-HMR-102

Driller: MaineDOT	Elevation (ft.) 361.3	Auger ID/OD: N/A	
Operator: Giles/Daggett/Giles	Datum: NAVD88	Sampler: Standard Split Spoon	
Logged By: B. Wilder	Rig Type: CME 45C	Hammer Wt./Fall: 140#/30"	
Date Start/Finish: 6/4/2014-6/5/2014	Drilling Method: Cased Wash Boring	Core Barrel: NQ-2	
Boring Location: 26+02.6, 13.3 ft Lt.	Casing ID/OD: NW	Water Level*: River Boring	
Hammer Efficiency Factor: 0.867	Hammer Type: Automatic ☒ Hydraulic ☐ Rope & Cathead ☐		

Definitions:
D = Split Spoon Sample
MD = Unsuccessful Split Spoon Sample attempt
U = Thin Wall Tube Sample
MU = Unsuccessful Thin Wall Tube Sample attempt
V = Insitu Vane Shear Test, PP = Pocket Penetrometer
MV = Unsuccessful Insitu Vane Shear Test attempt
R = Rock Core Sample
SSA = Solid Stem Auger
HSA = Hollow Stem Auger
RC = Roller Cone
WOH = weight of 140lb. hammer
WOR/C = weight of rods or casing
WO1P = Weight of one person
S_u = Insitu Field Vane Shear Strength (psf)
S_r = Pocket Torvane Shear Strength (psf)
q_p = Unconfined Compressive Strength (ksf)
N-uncorrected = Raw Field SPT N-value
Hammer Efficiency Factor = Annual Calibration Value
N_{60} = SPT N-uncorrected corrected for hammer efficiency
N_{60} = (Hammer Efficiency Factor/60%)*N-uncorrected
$S_{u(lab)}$ = Lab Vane Shear Strength (psf)
WC = water content, percent
LL = Liquid Limit
PL = Plastic Limit
PI = Plasticity Index
G = Grain Size Analysis
C = Consolidation Test

Depth (ft.)	Sample No.	Pen./Rec. (in.)	Sample Depth (ft.)	Blows (/6 in. Penetration Resistance) or RQD (%)	N-uncorrected	N_{60}	Casing Blows	Elevation (ft.)	Visual Description and Remarks	Laboratory Testing Results/ AASHTO and Unified Class
0	1D	24/8	0.00 - 2.00	3/7/3/7	10	14	11		Grey, wet, medium dense, gravelly, fine to coarse SAND, trace silt. (Alluvium). (3.00)	
							19			
							25	358.30		
							17			
5	2D	24/16	4.00 - 6.00	4/4/4/5	8	12	6		Grey-brown, wet, medium dense, fine SAND, some silt, trace medium to coarse sand, trace gravel. (Alluvium).	GM243191 A-2-4, SM WC=27.7%
							14			
							22			
							15			
							31			
10	3D	24/15	9.00 - 11.00	3/4/7/14	11	16	2		Grey, wet, medium dense, Silty, fine SAND, little gravel, trace medium to coarse sand. (Alluvium). (13.00)	GM242669 A-4, SM WC=16.6%
							19			
							119			
							119	348.30		
							79			
15	4D	24/14	14.00 - 16.00	23/16/13/13	29	42	49		Grey, moist, dense, fine to coarse Sandy, GRAVEL, little silt. (Glacial Till). (17.50)	GM245375 A-1-b, SW-SM WC=7.4%
							75			
							83			
							179	343.80		
20	5D	12/12	19.00 - 20.00	34/57	---		50		Roller Coned ahead from 18.1-19.0 ft bgs. Grey, wet, hard, SILT, some fine to coarse sand, some gravel. (Glacial Till). Roller Coned ahead to 24.0 ft bgs.	GM243192 A-4, ML WC=7.9%
							45			
							37			
							102			
25	6D	6/6	24.00 - 25.00	45/70	---		80		Similar to above. Roller Coned ahead to 29.0 ft bgs.	
							39			
							53			
							54			
							104			
30	7D	6/6	29.00 - 29.50	60	---		OPEN HOLE		Grey, wet, hard, SILT, some sand, little gravel. (Glacial Till). Roller Coned ahead to 32.1 ft bgs.	GM243311 A-4, ML WC=9.1%
								329.50 / 329.20		
	R1	60/60	32.10 - 37.10	RQD = 0%			NQ-2		Weathered ROCK. (31.80) Top of Intact Bedrock at Elev. 329.2 ft. R1: Bedrock: Grey, fine grained, limey SLATE, hard, very slightly weathered, no apparent jointing, cleavage along steeply dipping foliation, occassion microfaults and calcite veins. Allsbury Formation. Rock Mass Quality = Very Poor. R1:Core Times (min:sec) 32.1-33.1 ft (6:00) 33.1-34.1 ft (4:31) 34.1-35.1 ft (3:40) 35.1-36.1 ft (3:40) 36.1-37.1 ft (4:00) 100% Recovery (32.10)	
35								324.20	Bottom of Exploration at 37.10 feet below ground surface. (37.10)	

Remarks:

25.4 ft from Bridge Deck to Ground.
8" Concrete Bridge Deck.

Stratification lines represent approximate boundaries between soil types; transitions may be gradual.

* Water level readings have been made at times and under conditions stated. Groundwater fluctuations may occur due to conditions other than those present at the time measurements were made.

Page 1 of 1

Boring No.: BB-HMR-102

Maine Department of Transportation — Soil/Rock Exploration Log — US CUSTOMARY UNITS

Project: Haynesville Bridge #5623 carries US Route 2A over Mattawamkeag
Location: Haynesville, Maine
WIN: 20509.00

Boring No.: BB-HMR-103

Driller: MaineDOT	Elevation (ft.) 358.5	Auger ID/OD: N/A	
Operator: Giles/Daggett/Giles	Datum: NAVD88	Sampler: Standard Split Spoon	
Logged By: B. Wilder	Rig Type: CME 45C	Hammer Wt./Fall: 140#/30"	
Date Start/Finish: 6/12/15/2014	Drilling Method: Cased Wash Boring	Core Barrel: NQ-2	
Boring Location: 26+93.7, 6.3 ft Rt.	Casing ID/OD: NW	Water Level*: River Boring	
Hammer Efficiency Factor: 0.867	Hammer Type: Automatic ☒ Hydraulic ☐ Rope & Cathead ☐		

Definitions:
D = Split Spoon Sample
MD = Unsuccessful Split Spoon Sample attempt
U = Thin Wall Tube Sample
MU = Unsuccessful Thin Wall Tube Sample attempt
V = Insitu Vane Shear Test, PP = Pocket Penetrometer
MV = Unsuccessful Insitu Vane Shear Test attempt
R = Rock Core Sample
SSA = Solid Stem Auger
HSA = Hollow Stem Auger
RC = Roller Cone
WOH = weight of 140lb. hammer
WOR/C = weight of rods or casing
WO1P = Weight of one person
S_u = Insitu Field Vane Shear Strength (psf)
S_r = Pocket Torvane Shear Strength (psf)
q_p = Unconfined Compressive Strength (ksf)
N-uncorrected = Raw Field SPT N-value
Hammer Efficiency Factor = Annual Calibration Value
N_{60} = SPT N-uncorrected corrected for hammer efficiency
N_{60} = (Hammer Efficiency Factor/60%)*N-uncorrected
$S_{u(lab)}$ = Lab Vane Shear Strength (psf)
WC = water content, percent
LL = Liquid Limit
PL = Plastic Limit
PI = Plasticity Index
G = Grain Size Analysis
C = Consolidation Test

Depth (ft.)	Sample No.	Pen./Rec. (in.)	Sample Depth (ft.)	Blows (/6 in. Penetration Resistance) or RQD (%)	N-uncorrected	N_{60}	Casing Blows	Elevation (ft.)	Visual Description and Remarks	Laboratory Testing Results/ AASHTO and Unified Class
0	1D	24/12	0.00 - 2.00	1/1/1/1	2	3	1		Brown, wet, very loose, fine to medium SAND, some silt, trace coarse sand, some gravel. (Alluvium).	GM243312 A-2-4, SM WC=27.7%
							2			
							5			
							4			
							9			
5	2D	24/17	4.00 - 6.00	4/4/3/4	7	10	1		Grey, wet, loose, fine SAND, trace silt. (Alluvium).	DS#302135 2D & 3D combined: c=0.81 psi Phi=30.5 degrees
							9			
							13			
							16			
10	3D	24/14	11.00 - 13.00	4/4/5/16	9	13	4		Similar to above, except medium dense.	
							12			
							26			
							64	345.00		
							62			
							42			
15	4D	24/6	16.00 - 18.00	9/9/8/8	17	25	31		Grey, wet, medium dense, gravelly, fine to coarse SAND, trace silt. (Glacial Till).	GM243313 A-1-b, SW-SM WC=10.6%
							48			
							51			
							58			
							125			
20	MD	1.2/0	21.30 - 21.40	50	---		74		Cobble from 20.8-21.3 ft bgs. Failed sample attempt. Cobble from 21.3-21.4 ft bgs. Roller Coned ahead to 25.0 ft bgs.	
							111			
							96			
							83			
							9150	332.50		
25	R1	60/60	26.80 - 31.80	RQD = 77%			NQ-2	331.70	9150 blows for 0.2 ft. Cobble from 25.2-25.5 ft bgs. Roller Coned ahead to 26.8 ft bgs. (26.00) Weathered ROCK. (26.80) Top of Intact Bedrock at Elev. 331.7 ft. R1:Bedrock: Grey, fine grained, SLATE, hard, massive, jointing widely spaced at 4 to 5 ft, cleavage along foliation. Allsbury Formation. Rock Mass Quality = Good. R1:Core Times (min:sec) 25.8-27.8 ft (11:40) 27.8-28.8 ft (6:16) 28.8-29.8 ft (5:45) 29.8-30.8 ft (5:32) 30.8-31.8 ft (5:25) 100% Recovery (31.80)	
30									Bottom of Exploration at 31.80 feet below ground surface.	

Remarks:

27.9 ft from Bridge Deck to Ground.
8" Concrete Bridge Deck.
DS=Direct Shear, C=Cohesion, FA=Friction Angle

Stratification lines represent approximate boundaries between soil types; transitions may be gradual.

* Water level readings have been made at times and under conditions stated. Groundwater fluctuations may occur due to conditions other than those present at the time measurements were made.

Page 1 of 1

Boring No.: BB-HMR-103

Maine Department of Transportation — Soil/Rock Exploration Log — US CUSTOMARY UNITS

Project: Haynesville Bridge #5623 carries US Route 2A over Mattawamkeag
Location: Haynesville, Maine
WIN: 20509.00

Boring No.: BB-HMR-104

Driller: MaineDOT	Elevation (ft.) 386.1	Auger ID/OD: N/A	
Operator: Giles/Daggett/Giles	Datum: NAVD88	Sampler: Standard Split Spoon	
Logged By: B. Wilder	Rig Type: CME 45C	Hammer Wt./Fall: 140#/30"	
Date Start/Finish: 6/16/2014-6/17/2014	Drilling Method: Cased Wash Boring	Core Barrel: NQ-2	
Boring Location: 27+95.2, 12.3 ft Lt.	Casing ID/OD: NW	Water Level*: 21.0 ft bgs.	
Hammer Efficiency Factor: 0.867	Hammer Type: Automatic ☒ Hydraulic ☐ Rope & Cathead ☐		

Definitions:
D = Split Spoon Sample
MD = Unsuccessful Split Spoon Sample attempt
U = Thin Wall Tube Sample
MU = Unsuccessful Thin Wall Tube Sample attempt
V = Insitu Vane Shear Test, PP = Pocket Penetrometer
MV = Unsuccessful Insitu Vane Shear Test attempt
R = Rock Core Sample
SSA = Solid Stem Auger
HSA = Hollow Stem Auger
RC = Roller Cone
WOH = weight of 140lb. hammer
WOR/C = weight of rods or casing
WO1P = Weight of one person
S_u = Insitu Field Vane Shear Strength (psf)
S_r = Pocket Torvane Shear Strength (psf)
q_p = Unconfined Compressive Strength (ksf)
N-uncorrected = Raw Field SPT N-value
Hammer Efficiency Factor = Annual Calibration Value
N_{60} = SPT N-uncorrected corrected for hammer efficiency
N_{60} = (Hammer Efficiency Factor/60%)*N-uncorrected
$S_{u(lab)}$ = Lab Vane Shear Strength (psf)
WC = water content, percent
LL = Liquid Limit
PL = Plastic Limit
PI = Plasticity Index
G = Grain Size Analysis
C = Consolidation Test

Depth (ft.)	Sample No.	Pen./Rec. (in.)	Sample Depth (ft.)	Blows (/6 in. Penetration Resistance) or RQD (%)	N-uncorrected	N_{60}	Casing Blows	Elevation (ft.)	Visual Description and Remarks	Laboratory Testing Results/ AASHTO and Unified Class
0							SSA	385.52	7" PAVEMENT. (0.58)	
	1D	24/15	5.00 - 7.00	5/13/7/7	20	29			Brown, damp, medium dense, fine to coarse SAND, some gravel, little silt. (Fill).	
5										
10	2D	24/19	10.00 - 12.00	6/8/11/11	19	27	85		Similar to above. (Fill).	GM243195 A-1-b, SM WC=6.8%
							52			
							54			
							46	372.10		
							38			
15	3D	24/13	15.00 - 17.00	6/7/6/9	13	19	22		Brown, wet, medium dense, fine to coarse Sandy, GRAVEL, little silt. (Alluvium). (14.00)	GM243314 combined w/ 3D A-1-b, GM WC=11.6%
							26			
							31			
							35			
							37			
20	4D	24/13	20.00 - 22.00	7/10/7/6	17	25	18		Similar to above.	GM243314 combined w/ 3D A-1-b, GM WC=11.6%
							35			
							42			
							55			
							43	362.10		
25	5D	24/12	25.00 - 27.00	9/3/2/7	5	7	16		Grey, wet, loose, gravelly, fine to coarse SAND, some silt, occasional cobble. (Glacial Stream Deposits). (28.50)	
							58			
							91			
							65	357.60		
30	6D	24/14	30.00 - 32.00	7/4/6/7	10	14	21		Grey, wet, medium dense, fine to medium SAND, little silt, trace coarse sand, trace gravel, trace wood. (Glacial Stream Deposits).	GM243196 A-2-4, SM WC=23.1%
							38			
							39			
							41			
							42			
							45			
35	7D	24/15	35.00 - 37.00	4/4/5/6	9	13	20		Grey, wet, medium dense, fine to medium SAND, trace coarse sand, trace gravel, trace silt. (Glacial Stream Deposits).	GM243197 A-3, SP-SM WC=20.8%
							29			
							40			
							43			
							58			
							41	343.10		
							53			
							71			
							74			
45	8D	24/16	40.00 - 42.00	4/5/5/7	10	14	21		Similar to above.	
							33			
							53			
							71			
							74			
							29		Grey, wet, stiff, Sandy SILT, trace gravel. (Glacial Till).	GM243198 A-4, ML WC=22.9%
							39			
							45			
							167			
							396			
50	9D	24/18	45.00 - 47.00	3/3/5/6	8	12	108		Grey, wet, hard, SILT, some sand, some clay, little gravel. (Glacial Till). Roller Coned ahead to 55.0 ft bgs.	GM243200 A-4, CL WC=49.2% LL=23 PL=15 PI=8
							81			
							59			
							118			
							159			
55	10D	24/20	55.00 - 57.00	32/48/45/60	93	134	RC		Similar to above. (Glacial Till).	
								326.90		
	R1	60/60	59.20 - 64.20	RQD = 38%			NQ-2		Top of Bedrock at Elev. 326.9 ft. (59.20) R1:Bedrock: Upper 3 ft of core, grey, fine grained SLATE, joint set at 1-2 ft, surfaces weathered, rust staining and pyrite veins, with igneous intrusion in lower 2-feet of core run. Allsbury Formation. Rock Mass Quality = Poor. R1:Core Times (min:sec) 59.2-60.2 ft (5:27) 60.2-61.2 ft (5:33) 61.2-62.2 ft (5:33) 62.2-63.2 ft (5:54) 63.2-64.2 ft (5:45) 100% Recovery (64.20)	
60								321.90	Bottom of Exploration at 64.20 feet below ground surface.	
65										
70										
75										

Remarks:

Stratification lines represent approximate boundaries between soil types; transitions may be gradual.

* Water level readings have been made at times and under conditions stated. Groundwater fluctuations may occur due to conditions other than those present at the time measurements were made.

Page 1 of 1

Boring No.: BB-HMR-104

STATE OF MAINE
DEPARTMENT OF TRANSPORTATION

STP-2050(900)

WIN 20509.00

BRIDGE PLANS

BRIDGE NO. 5623

PROJ. MANAGER		BY	DATE
DESIGN-DETAILED	S. BODGE	G. LIBBY	------
CHECKED-REVIEWED	R. MYERS	R. MYERS	------
DESIGN2-DETAILED2	R. MEYERS	L. KRUSINSKI	NOV 2015
DESIGN3-DETAILED3	------	T. WHITE	------
REVISIONS 1	------	------	------
REVISIONS 2	------	------	------
REVISIONS 3	------	------	------
REVISIONS 4	------	------	------
FIELD CHANGES	------	------	------

SIGNATURE

P.E. NUMBER

DATE

HAYNESVILLE BRIDGE
MATTAWAMKEAG RIVER
HAYNESVILLE AROOSTOOK COUNTY

BORING LOGS

SHEET NUMBER
7
OF 34

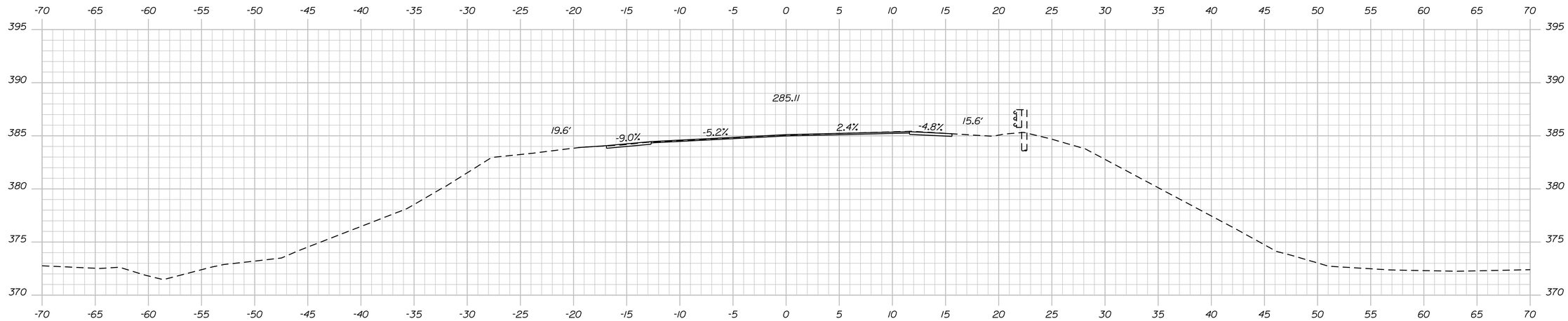

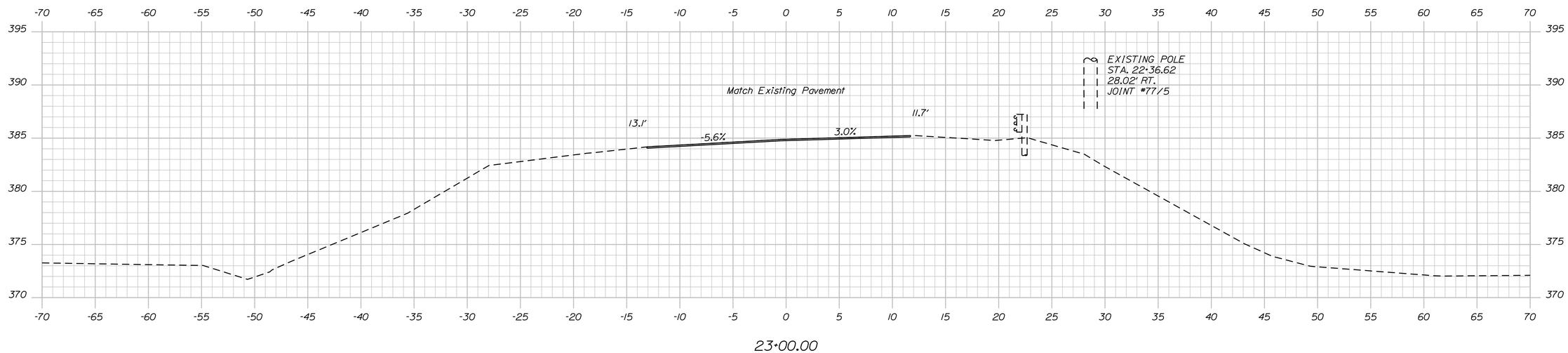

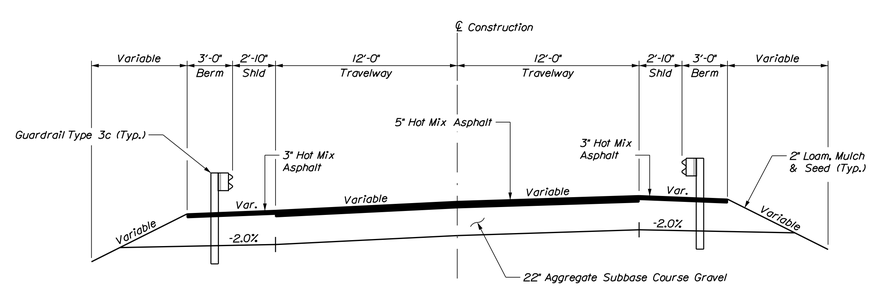

TYPICAL APPROACH SECTION

STATE OF MAINE
DEPARTMENT OF TRANSPORTATION

STP-2050(900)

PIN 20509.00

BRIDGE NO. 5823

BRIDGE PLANS

PROJ. MANAGER	M. WIGHT	BY	DATE
DESIGN-DETAILED	T. HUELM	LIBBY/MRP	JULY 2015
CHECKED-REVIEWED	B. REEVES	B. REEVES	B. REEVES
DESIGN2-DETAILED2			
DESIGN3-DETAILED3			
REVISIONS 1			
REVISIONS 2			
REVISIONS 3			
REVISIONS 4			
FIELD CHANGES			

SIGNATURE

P.E. NUMBER

DATE

HAYNESVILLE BRIDGE
MATTAWAMKEAG RIVER
HAYNESVILLE AROOSTOOK COUNTY

CROSS SECTIONS

SHEET NUMBER

8

OF 34

Filename: ...\008_XSECT_23+00 to 23+25_001.dgnDivision: BRIDGE Username: david.sullivan Date:4/15/2016

Sta. 23+00.00 to Sta. 23+25.00

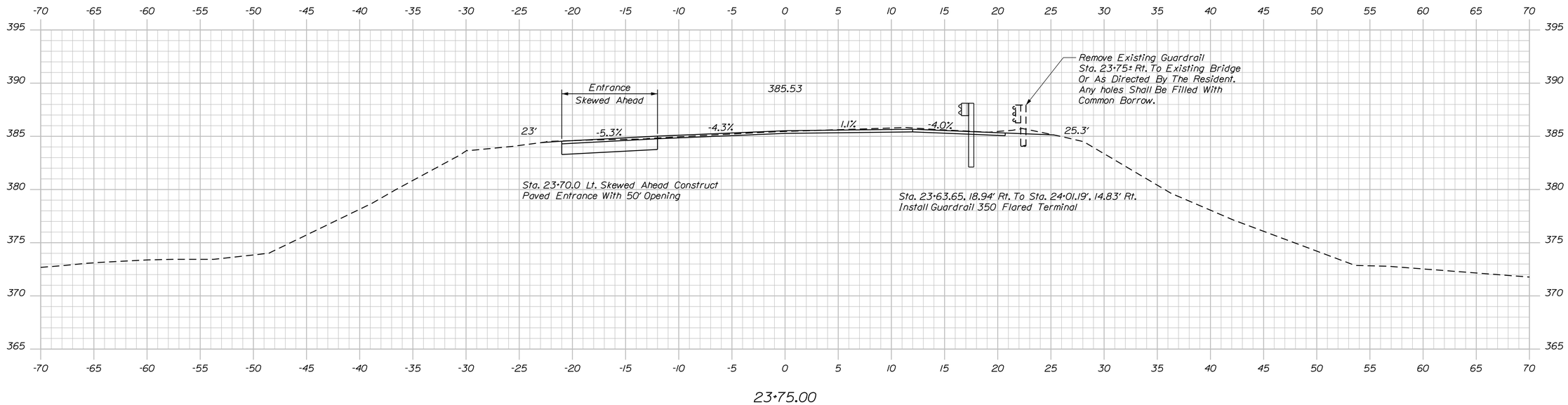

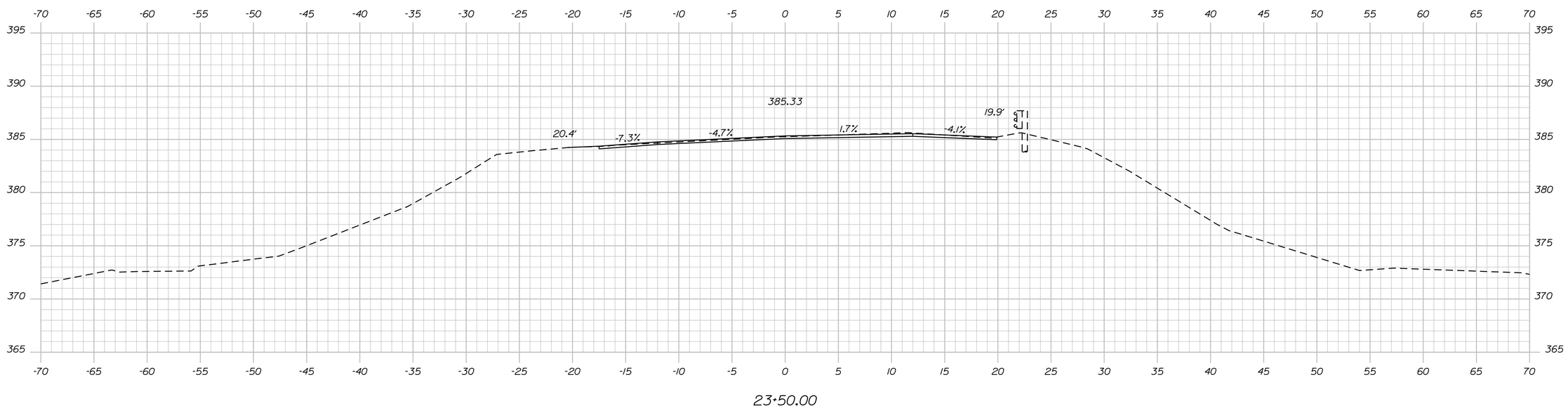

STATE OF MAINE
DEPARTMENT OF TRANSPORTATION

STP-2050(900)

PIN 20509.00

BRIDGE NO. 5823

BRIDGE PLANS

PROJ. MANAGER	M. WIGHT	BY	DATE
DESIGN-DETAILED	T. HUELM	LIBBY/MRP	MAR 2015
CHECKED-REVIEWED	B. REEVES	B. REEVES	B. REEVES
DESIGN2-DETAILED2			
DESIGN3-DETAILED3			
REVISIONS 1			
REVISIONS 2			
REVISIONS 3			
REVISIONS 4			
FIELD CHANGES			

SIGNATURE

P.E. NUMBER

DATE

HAYNESVILLE BRIDGE
MATTAWAMKEAG RIVER
HAYNESVILLE AROOSTOOK COUNTY

CROSS SECTIONS

SHEET NUMBER

9

OF 34

Sta. 23+50.00 to Sta. 23+75.00

Filename: ...\009_XSECT_23+50 to 23+75_002.dgn Division: BRIDGE Username: david.sullivan Date:4/15/2016

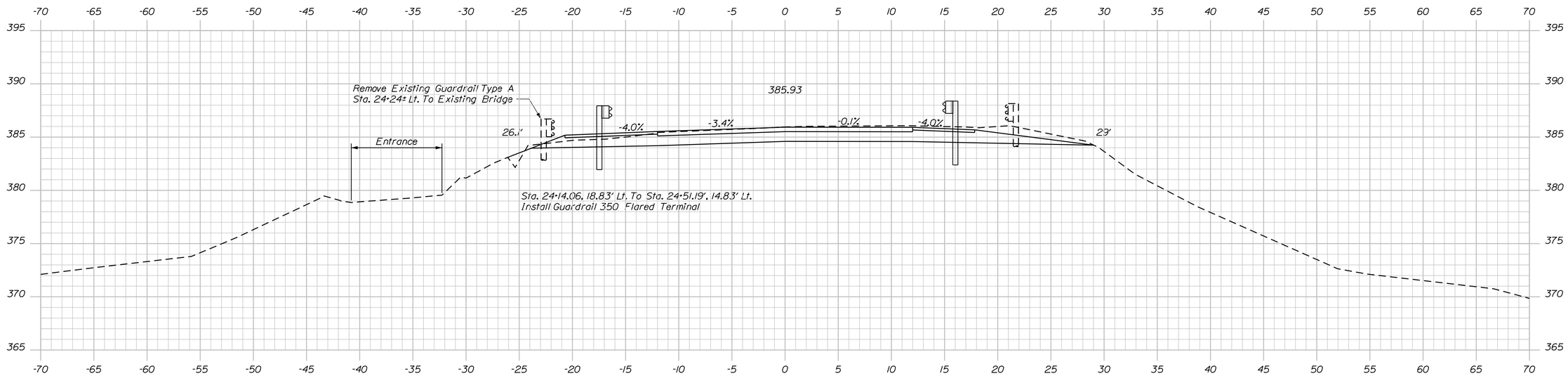

24+25.00

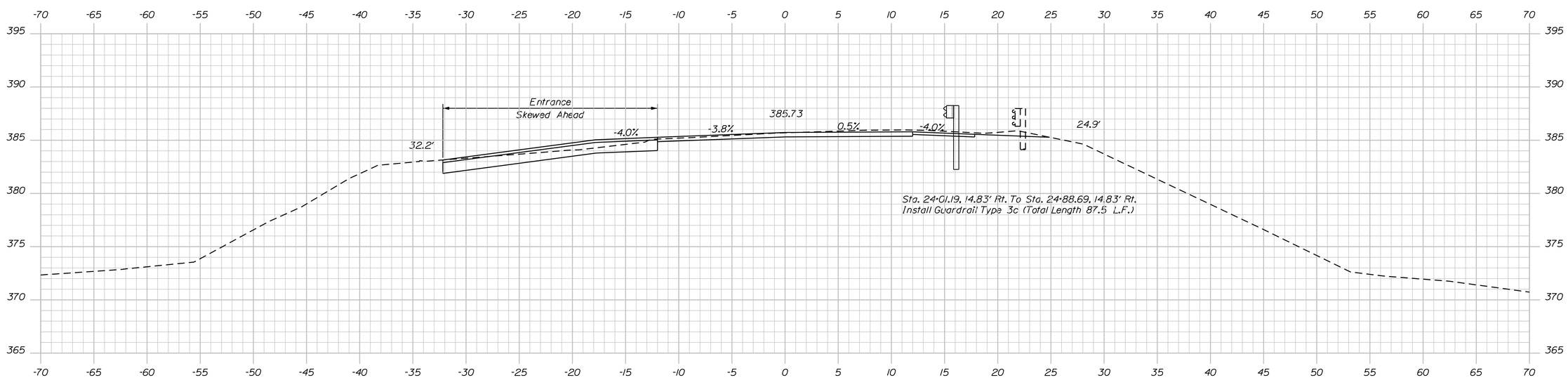

24+00.00
BEGIN TRANSITION

Sta. 24+50.00 to Sta. 24+75.00

STATE OF MAINE
DEPARTMENT OF TRANSPORTATION

STP-2050(900)

PIN 20509.00

BRIDGE NO. 5623

BRIDGE PLANS

PROJ. MANAGER	M. WIGHT	BY	DATE
DESIGN-DETAILED	T. HUELM	LIBBY\MRP	MAR 2016
CHECKED-REVIEWED	B. REEVES	Team North	APRIL 2016
DESIGN2-DETAILED2	------	------	------
DESIGN3-DETAILED3	------	------	------
REVISIONS 1	------	------	------
REVISIONS 2	------	------	------
REVISIONS 3	------	------	------
REVISIONS 4	------	------	------
FIELD CHANGES	------	------	------

SIGNATURE

P.E. NUMBER

DATE

HAYNESVILLE BRIDGE
MATTAWAMKEAG RIVER
HAYNESVILLE AROOSTOOK COUNTY

CROSS SECTIONS

SHEET NUMBER

10

OF 34

Filename: ...\010_XSECT_24+00 to 24+25_003.dgnDivision: BRIDGE Username: david.sullivan Date:4/15/2016

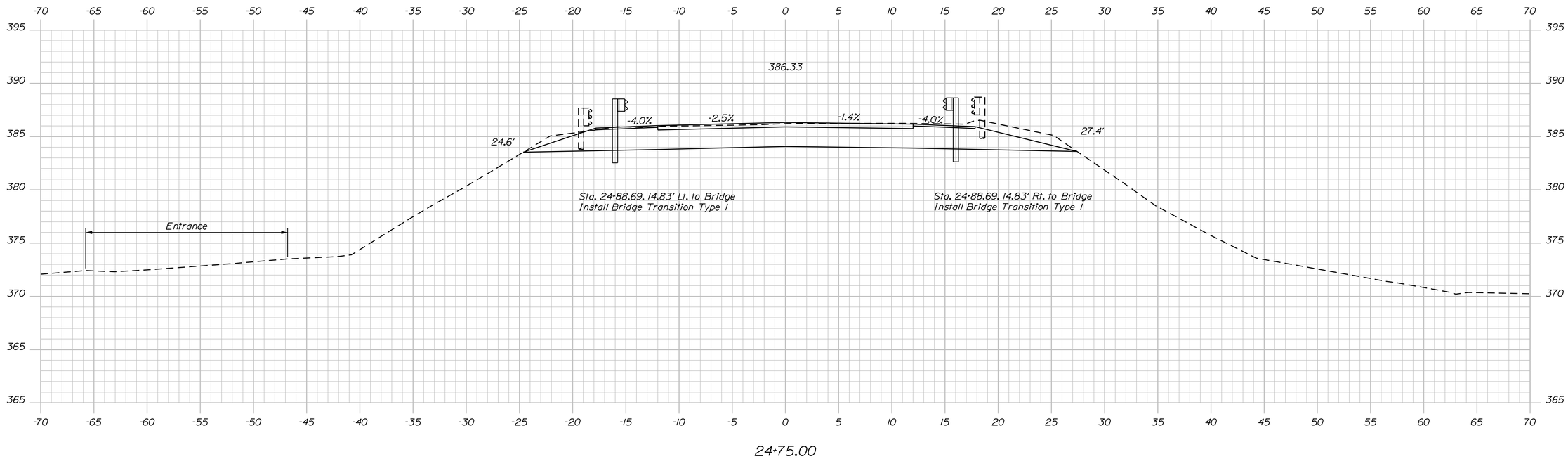

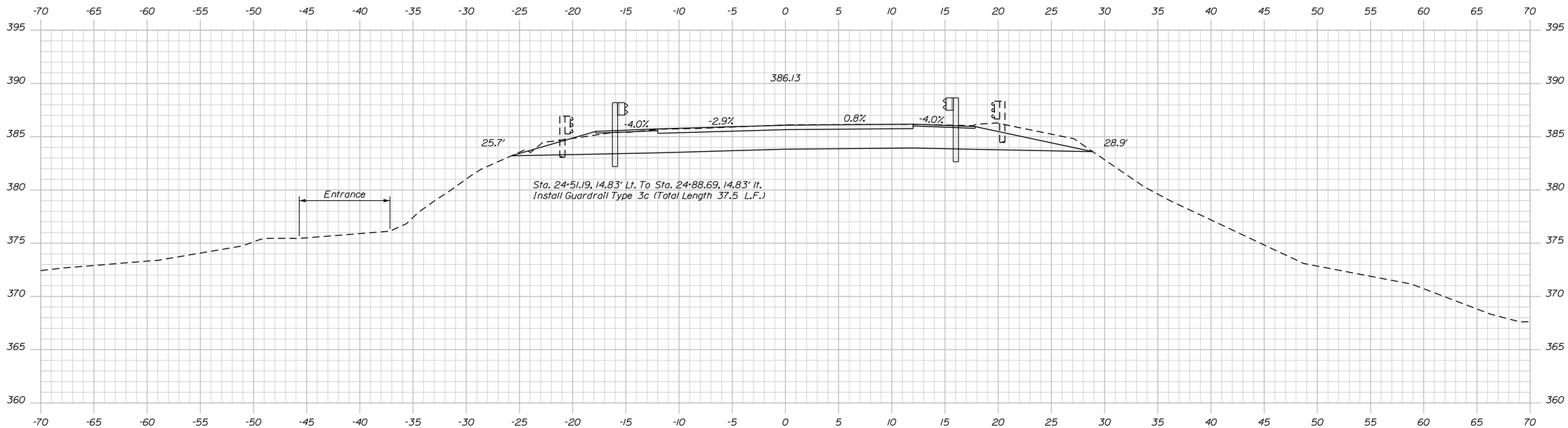

STATE OF MAINE
DEPARTMENT OF TRANSPORTATION

STP-2050(900)

PIN 20509.00

BRIDGE NO. 5623

BRIDGE PLANS

		BY	DATE
PROJ. MANAGER	M. WIGHT		
DESIGN-DETAILED	T. HUELM	LIBBY/MRP	MAR 2016
CHECKED-REVIEWED	B. REEVES	Team North	APRIL 2016
DESIGN2-DETAILED2			
DESIGN3-DETAILED3			
REVISIONS 1			
REVISIONS 2			
REVISIONS 3			
REVISIONS 4			
FIELD CHANGES			

SIGNATURE

P.E. NUMBER

DATE

HAYNESVILLE BRIDGE
MATTAWAMKEAG RIVER
HAYNESVILLE AROOSTOOK COUNTY

CROSS SECTIONS

SHEET NUMBER

11

OF 34

Sta. 24+50.00 to Sta. 24+75.00

Filename: ...\011_XSECT_24+50 to 24+75_004.dgn Division: BRIDGE Username: david.sullivan Date:4/15/2016

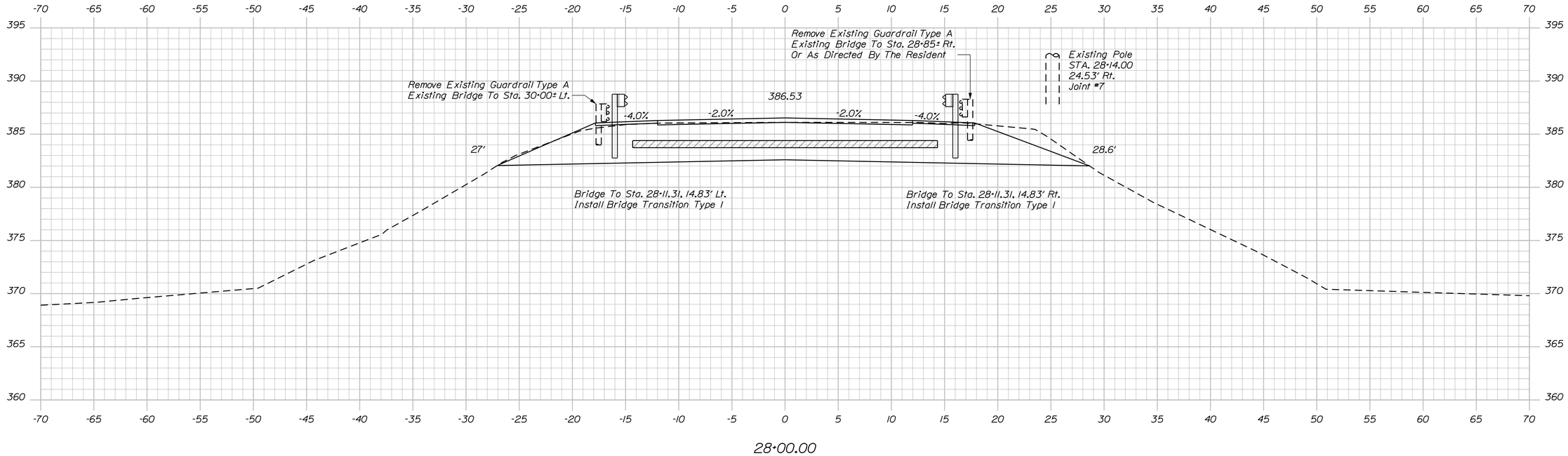

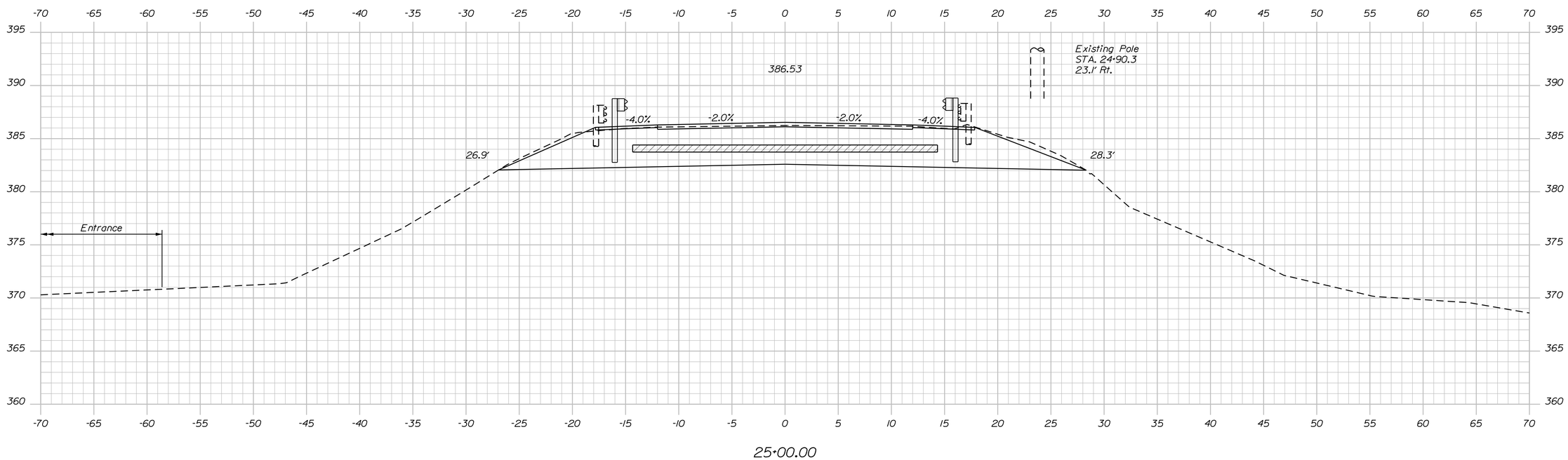

STATE OF MAINE
DEPARTMENT OF TRANSPORTATION

STP-2050(900)

PIN 20509.00

BRIDGE NO. 5823

BRIDGE PLANS

		BY	DATE
PROJ. MANAGER	M. WIGHT		
DESIGN-DETAILED	T. HUELM	LIBBY/MRP	MAR 2016
CHECKED-REVIEWED	B. REEVES	Team North	APRIL 2016
DESIGN2-DETAILED2			
DESIGN3-DETAILED3			
REVISIONS 1			
REVISIONS 2			
REVISIONS 3			
REVISIONS 4			
FIELD CHANGES			

SIGNATURE

P.E. NUMBER

DATE

HAYNESVILLE BRIDGE
MATTAWAMKEAG RIVER
HAYNESVILLE AROOSTOOK COUNTY

CROSS SECTIONS

SHEET NUMBER

12

OF 34

Sta. 25+00.00 & Sta. 28+00.00

Filename: ...\012_XSECT_25+00 to 28+00_005.dgnDivision: BRIDGE Username: david.sullivan Date:4/15/2016

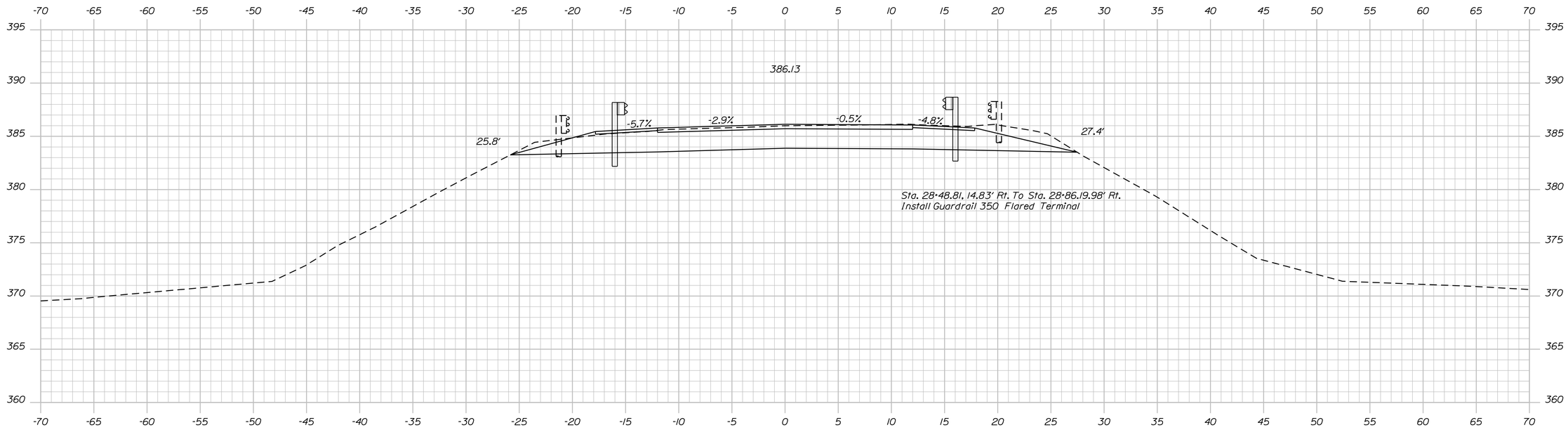

28+50.00
END PROJECT/BEGIN TRANSITION

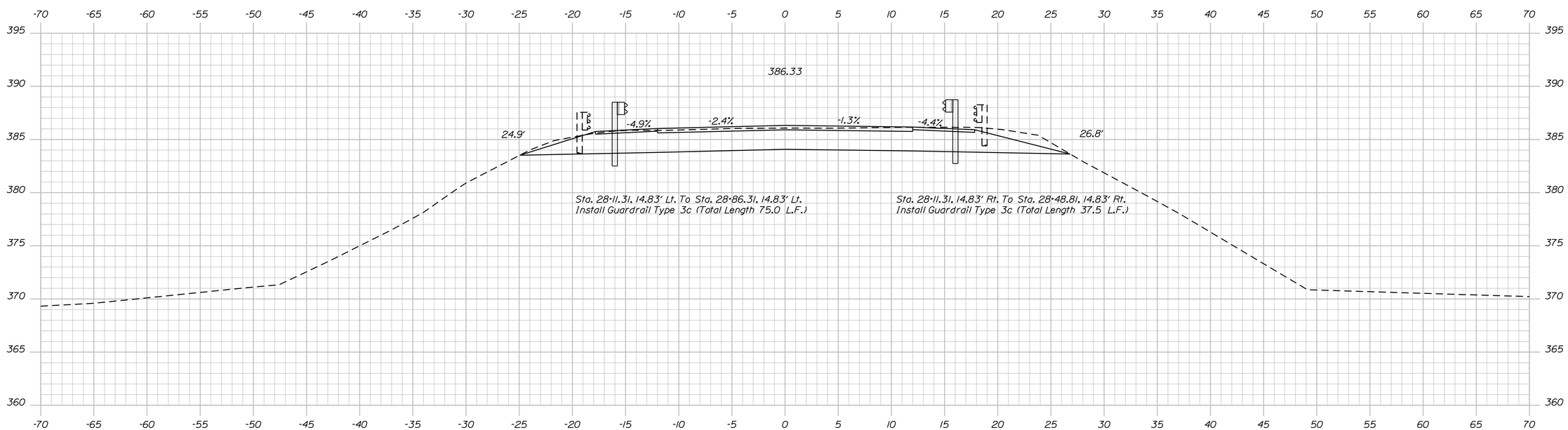

28+25.00

STATE OF MAINE
DEPARTMENT OF TRANSPORTATION

STP-2050(900)

PIN
20509.00

BRIDGE NO. 5823

BRIDGE PLANS

PROJ. MANAGER	M. WIGHT			
DESIGN-DETAILED	T. HUELM	BY	DATE	
CHECKED-REVIEWED	B. REEVES	LIBBY/MRP	MAR 2016	
DESIGN2-DETAILED2		Team North	APRIL 2016	
DESIGN3-DETAILED3				
REVISIONS 1				
REVISIONS 2				
REVISIONS 3				
REVISIONS 4				
FIELD CHANGES				

SIGNATURE

P.E. NUMBER

DATE

HAYNESVILLE BRIDGE
MATTAWAMKEAG RIVER
HAYNESVILLE AROOSTOOK COUNTY

CROSS SECTIONS

SHEET NUMBER
13
OF 34

Sta. 28+25.00 to Sta. 28+50.00

Filename: ...\013_XSECT_28+25 to 28+50_006.dgnDivision: BRIDGE Username: david.sullivan Date:4/15/2016

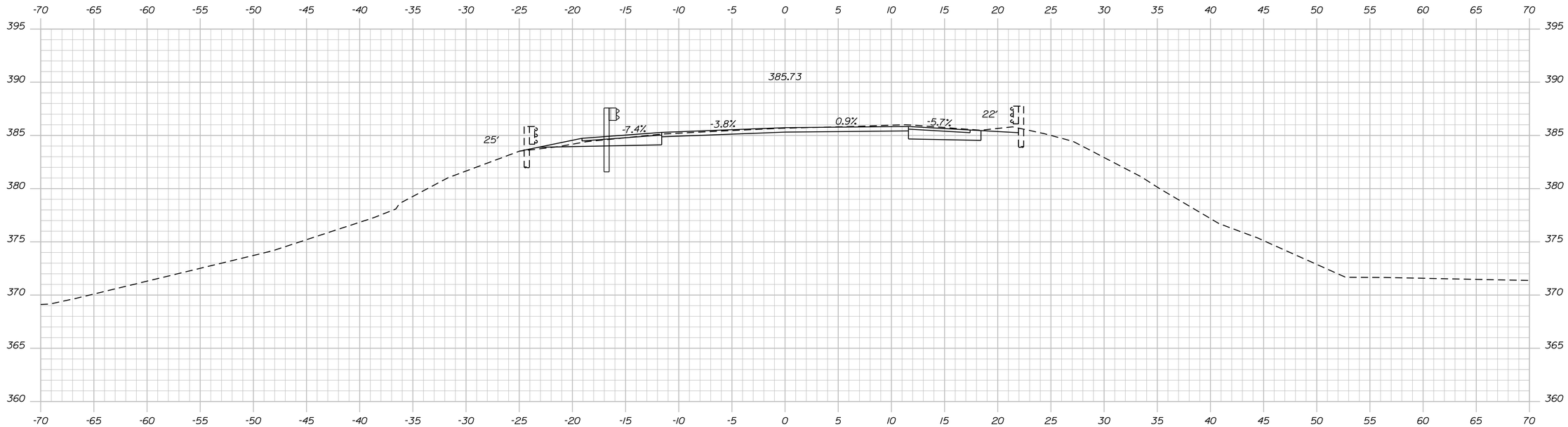

29+00.00
END TRANSITION

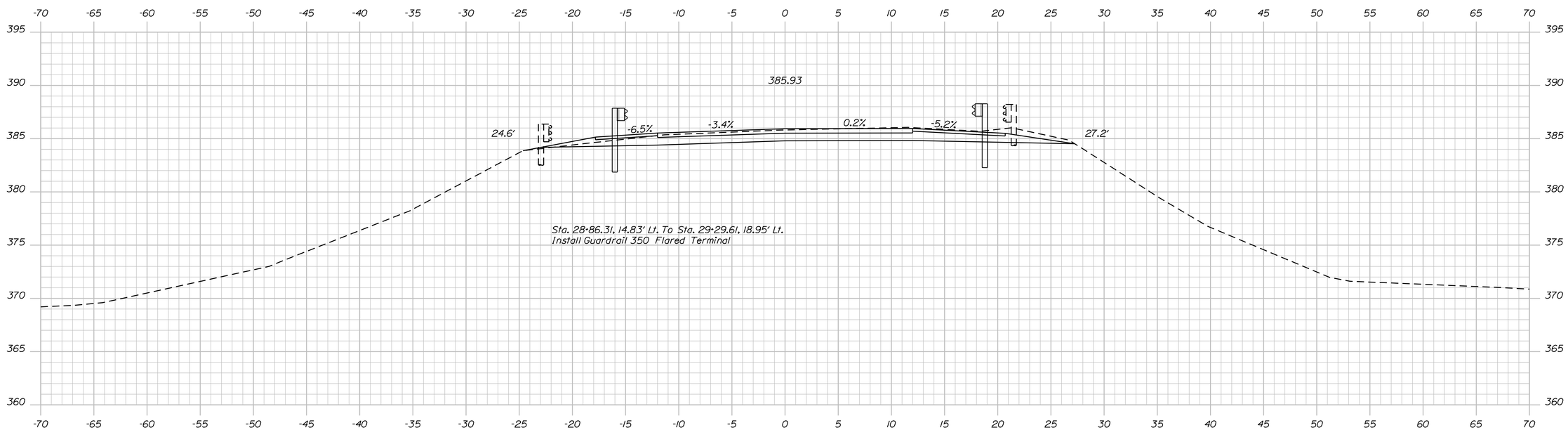

28+75.00

STATE OF MAINE
DEPARTMENT OF TRANSPORTATION

STP-2050(900)

PIN 20509.00

BRIDGE NO. 5823

BRIDGE PLANS

PROJ. MANAGER	M. WIGHT	BY	DATE
DESIGN-DETAILED	T. HUELM	LIBBY/MRP	MAR 2016
CHECKED-REVIEWED	B. REEVES	Team North	APRIL 2016
DESIGN2-DETAILED2			
DESIGN3-DETAILED3			
REVISIONS 1			
REVISIONS 2			
REVISIONS 3			
REVISIONS 4			
FIELD CHANGES			

SIGNATURE

P.E. NUMBER

DATE

HAYNESVILLE BRIDGE
MATTAWAMKEAG RIVER
HAYNESVILLE AROOSTOOK COUNTY

CROSS SECTIONS

SHEET NUMBER

14

OF 34

Sta. 28+75.00 to Sta. 29+00.00

Filename: ...\014_XSECT_28+75 to 29+00_007.dgnDivision: BRIDGE Username: david.sullivan Date:4/15/2016

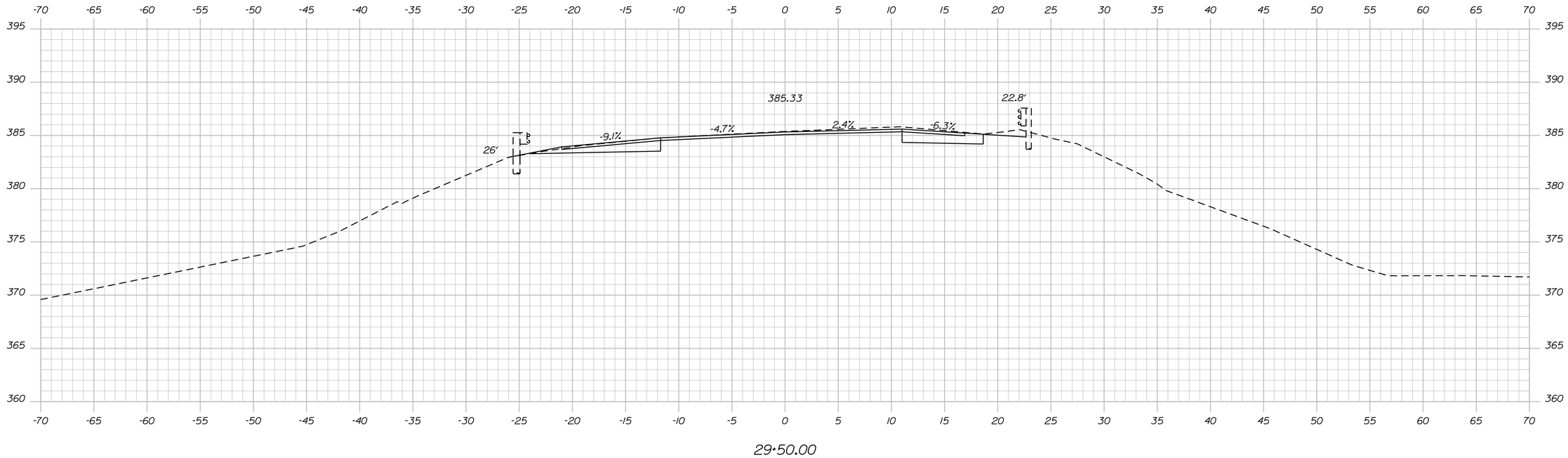

29+50.00

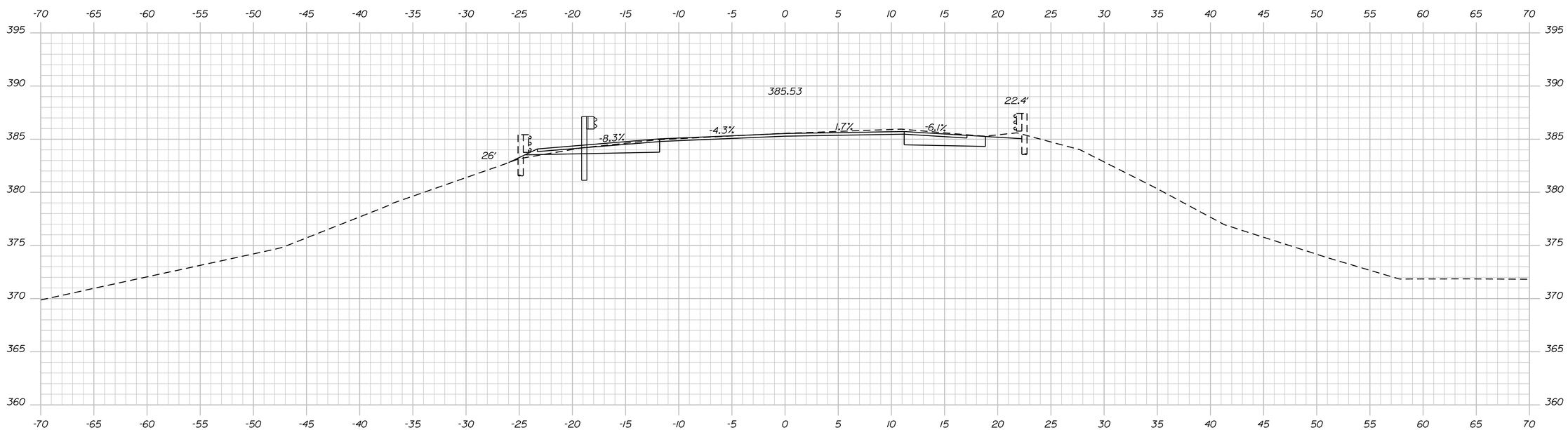

29+25.00

STATE OF MAINE
DEPARTMENT OF TRANSPORTATION

STP-2050(900)

PIN 20509.00

BRIDGE NO. 5823

BRIDGE PLANS

PROJ. MANAGER	M. WIGHT	BY	DATE	
DESIGN-DETAILED	T. HUELM	LIBBY/MRP	MAR 2016	
CHECKED-REVIEWED	B. REEVES	Team North	APRIL 2016	SIGNATURE
DESIGN2-DETAILED2				
DESIGN3-DETAILED3				P.E. NUMBER
REVISIONS 1				
REVISIONS 2				
REVISIONS 3				DATE
REVISIONS 4				
FIELD CHANGES				

HAYNESVILLE BRIDGE
MATTAWAMKEAG RIVER
HAYNESVILLE AROOSTOOK COUNTY

CROSS SECTIONS

SHEET NUMBER

15

OF 34

Sta. 29+25.00 to Sta. 29+50.00

Filename: ...\015_XSECT_29+25 to 29+50_008.dgnDivision: BRIDGE Username: david.sullivan Date:4/15/2016

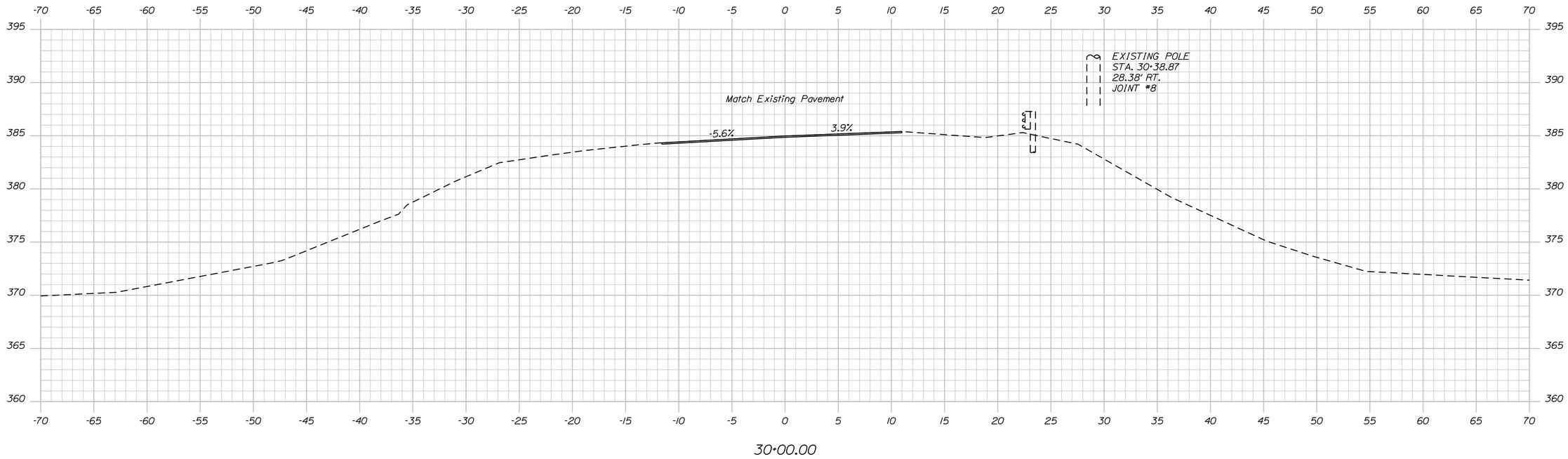

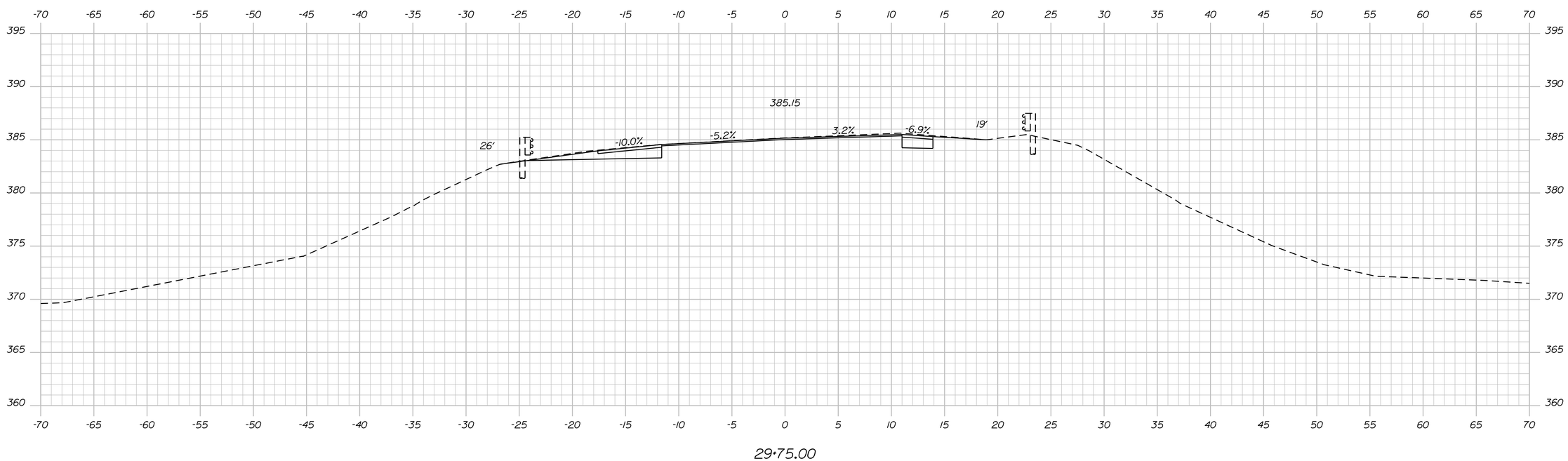

Filename: ...\016_XSECT_29+75 to 30+00_009.dgnDivision: BRIDGE Username: david.sullivan Date:4/15/2016

STATE OF MAINE
DEPARTMENT OF TRANSPORTATION

STP-2050(900)

PIN 20509.00

BRIDGE NO. 5823

BRIDGE PLANS

PROJ. MANAGER	M. WIGHT	BY	DATE	
DESIGN-DETAILED	T. HUELM	LIBBY MRP	MAR 2016	SIGNATURE
CHECKED-REVIEWED	B. REEVES	Team North	APRIL 2016	
DESIGN2-DETAILED2				P.E. NUMBER
DESIGN3-DETAILED3				
REVISIONS 1				
REVISIONS 2				DATE
REVISIONS 3				
REVISIONS 4				
FIELD CHANGES				

HAYNESVILLE BRIDGE
MATTAWAMKEAG RIVER
HAYNESVILLE AROOSTOOK COUNTY

CROSS SECTIONS

SHEET NUMBER

16

OF 34

Sta. 29+75.00 to Sta. 30+00.00

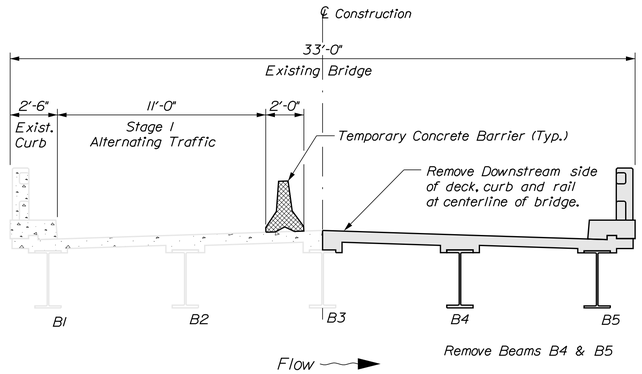

STAGE 1

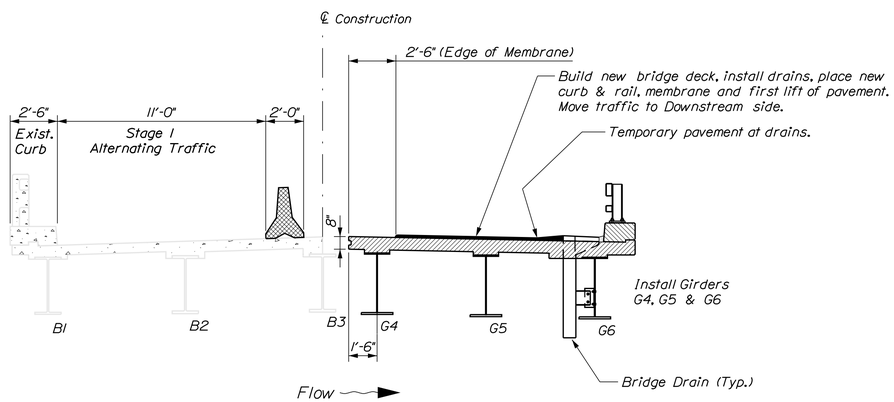

STAGE 2

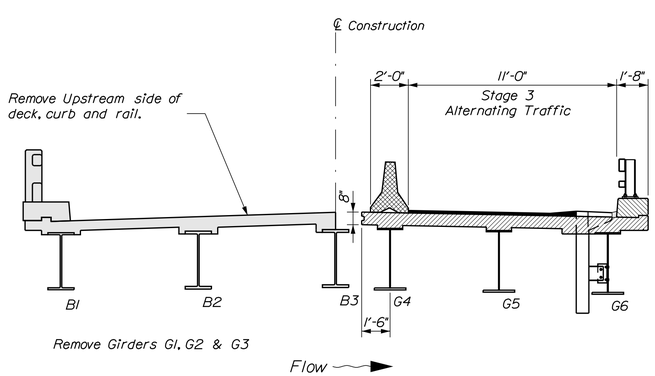

STAGE 3

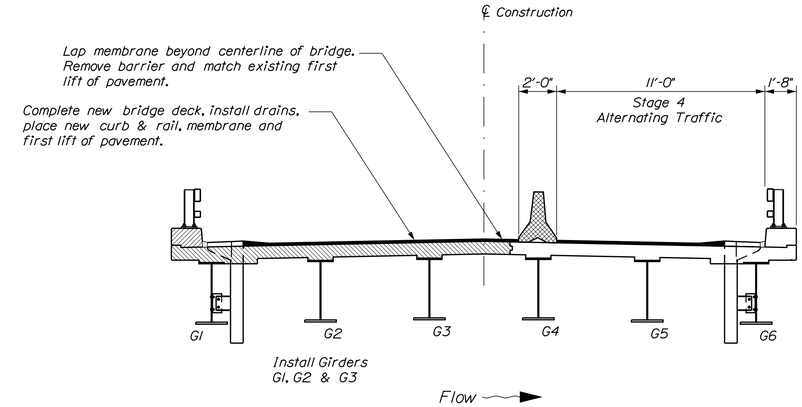

STAGE 4

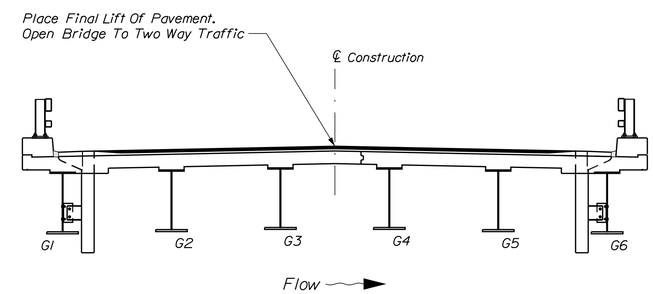

STAGE 5

STAGED CONSTRUCTION NOTES:

Stage 1 -

1.) Construct a single lane for alternating two-way traffic with traffic signals on Upstream side.
2.) Remove entire length of deck at bridge centerline on Downstream side.
3.) Remove Beams B4 and B5.

Stage 2 -

4.) Install new Girders G4, G5 & G6.
5.) Build new bridge deck on Downstream side. Install drains, and place curb & rail.
6.) Place membrane and first lift of new pavement on deck surface.

Stage 3 -

7.) Move alternating two-way traffic with signals to Downstream side of roadway.
8.) Remove Upstream side of bridge deck.
9.) Remove Beams B1, B2 and B3.

Stage 4 -

10.) Install Girders G1, G2 and G3.
11.) Build new bridge deck on Upstream side. Install drains and place curb & rail.
12.) Lap membrane and place first lift of new pavement on deck surface.

Stage 5 -

13.) Place final lift of pavement.
14.) Open bridge to two way traffic.

NOTES:

1. On the existing bridge, positively attach the temporary concrete barrier to the deck or link it in one rigid unit over the bridge. On the new bridge deck, attach the temporary concrete barrier sections together in a rigid unit over the bridge. When linking the barrier together in a rigid unit, follow the details in State of New York Department of Transportation U.S. Customary Standard Sheet 619-01 (Temporary Concrete Barrier) Sheet 3 of 3. This document can currently be found at https://www.dot.ny.gov/main/business-center/engineering/cadd-info/drawings/standard-sheets-us-repository/619-01_01061le2.pdf

STATE OF MAINE
DEPARTMENT OF TRANSPORTATION

STP-2050(900)

WIN 20509.00

BRIDGE NO. 5623

BRIDGE PLANS

		BY	DATE
PROJ. MANAGER	M. WIGHT		
DESIGN-DETAILED	T. HUELM	LIBBY/MRP	MAR 2016
CHECKED-REVIEWED	B. REEVES	Team North	APRIL 2016
DESIGN2-DETAILED2			
DESIGN3-DETAILED3			
REVISIONS 1			
REVISIONS 2			
REVISIONS 3			
REVISIONS 4			
FIELD CHANGES			

SIGNATURE

P.E. NUMBER

DATE

HAYNESVILLE BRIDGE
MATTAWAMKEAG RIVER
HAYNESVILLE AROOSTOOK COUNTY

STAGED CONSTRUCTION PLANS

SHEET NUMBER

17

OF 34

Filename: ...\MSTA\017_StageConstr.dgn Division: BRIDGE Username: david.sullivan Date:4/15/2016

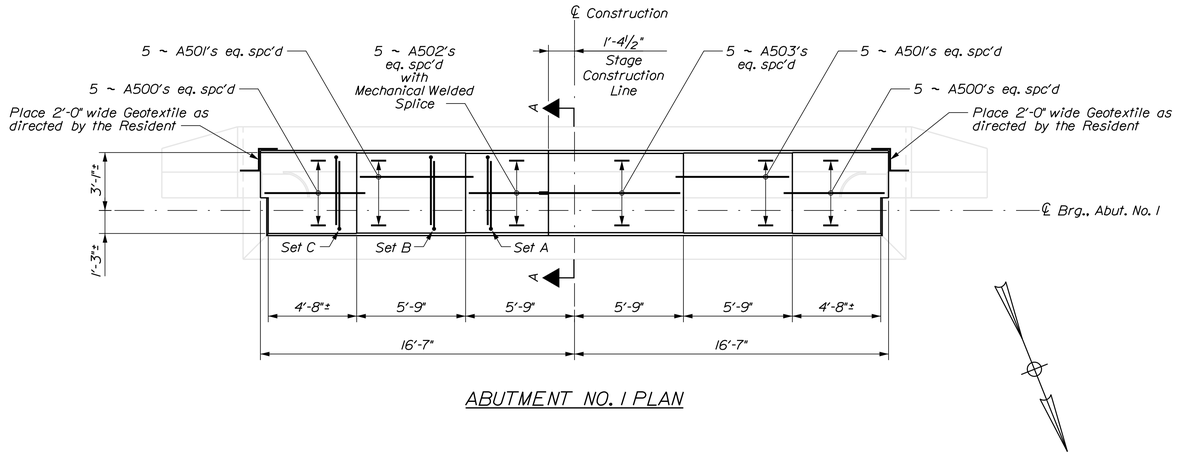

ABUTMENT NO. 1 PLAN

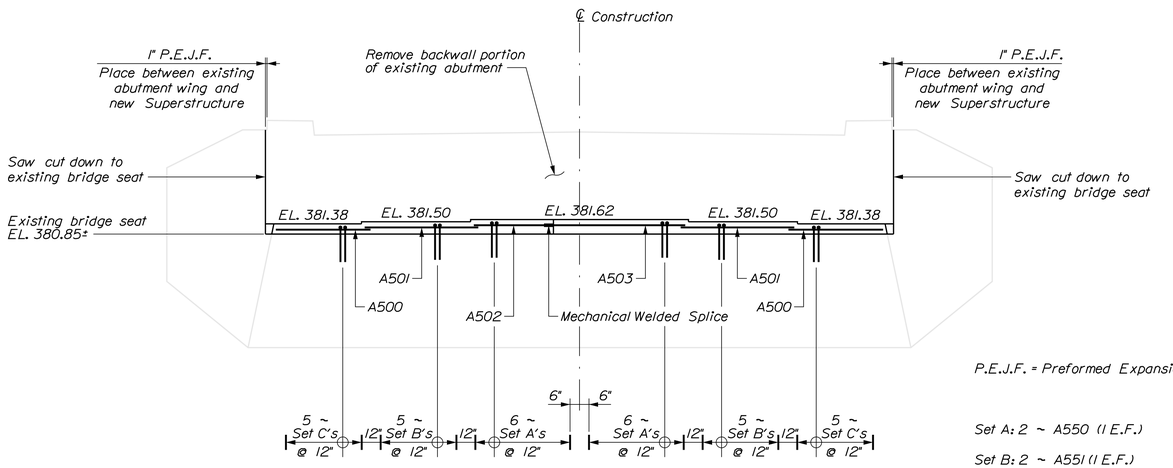

ABUTMENT NO. 1 ELEVATION

P.E.J.F. = Preformed Expansion Joint Filler

Set A: 2 ~ A550 (1 E.F.)

Set B: 2 ~ A551 (1 E.F.)

Set C: 2 ~ A552 (1 E.F.)

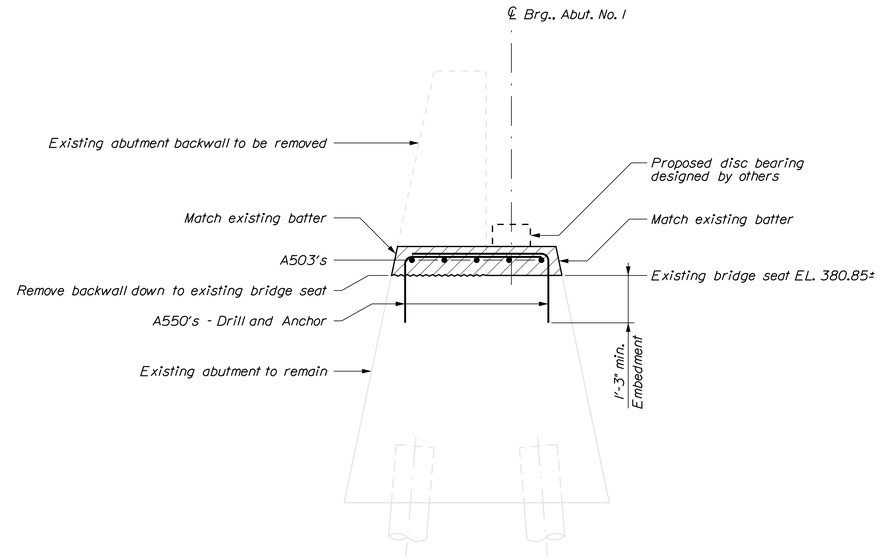

SECTION A-A

ABUTMENT NOTES

1. Bridge pedestal elevations shown are based on bearing heights given in the Disc Bearing Design Table. The actual pedestal elevations shall be adjusted to accommodate the bearings supplied by the Contractor. Adjustments to the pedestal elevations shall be made, if necessary, according to the provisions on the Disc Bearings Sheet. Payment for bearing pedestal adjustment shall be considered incidental to related Contract Items.

2. Any rebar exposed due to the removal of the top portion of the existing abutment shall be cut 2" below the newly cut concrete surface and sealed with an approved sealant.

3. ½" Polystyrene Plastic Insulation used at Abutment No. 1 shall not be paid for directly. Payment shall be considered incidental to related contract items.

4. 2'-0" wide Geotextile placed on Abutment No. 1 shall not be paid for directly. Payment shall be considered incidental to related contract items.

5. Reinforcing steel shall have a minimum concrete cover of 2 inches.

6. Cover joints where waterstops are not required in accordance with Standard Detail 502 (01).

PIER NOTES

1. The pedestal elevations shall be adjusted to accommodate the bearings supplied by the Contractor. Adjustments to the pedestal elevations shall be made according to the provisions on the Disc Bearings Sheet. Payment for bearing pedestal adjustment shall be considered incidental to related Contract Items.

STATE OF MAINE
DEPARTMENT OF TRANSPORTATION

STP-2050(900)

WIN 20509.00

BRIDGE NO. 5823

BRIDGE PLANS

PROJ. MANAGER	M. WIGHT	BY	DATE
DESIGN-DETAILED	T. HJELM	LIBBY\MRP	MAR 2016
CHECKED-REVIEWED	B. REEVES	Team North	APRIL 2016
DESIGN2-DETAILED2	-----	-----	-----
DESIGN3-DETAILED3	-----	-----	-----
REVISIONS 1	-----	-----	-----
REVISIONS 2	-----	-----	-----
REVISIONS 3	-----	-----	-----
REVISIONS 4	-----	-----	-----
FIELD CHANGES	-----	-----	-----

SIGNATURE

P.E. NUMBER

DATE

HAYNESVILLE BRIDGE
MATTAWAMKEAG RIVER
HAYNESVILLE AROOSTOOK COUNTY

ABUTMENT NO. 1 MODIFICATION

SHEET NUMBER

18

OF 34

Filename: ...\018_Abutment_No1_Modification.dgn Division: BRIDGE Username: david.sullivan Date:4/15/2016

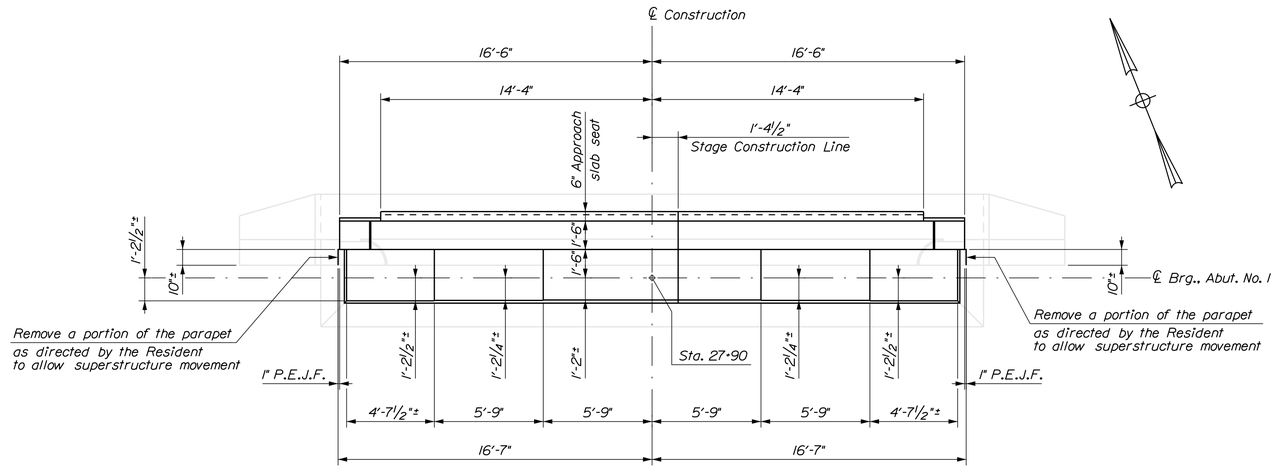

ABUTMENT NO. 2 PLAN

P.E.J.F. = Preformed Expansion Joint Filler

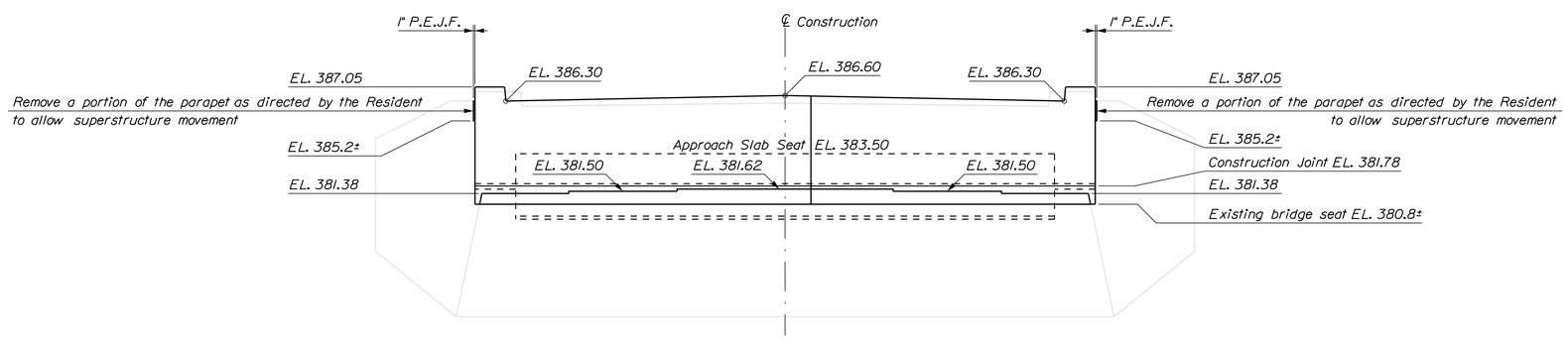

ABUTMENT NO. 2 ELEVATION

STATE OF MAINE
DEPARTMENT OF TRANSPORTATION

STP-2050(900)

WIN 20509.00

BRIDGE NO. 5823

BRIDGE PLANS

PROJ. MANAGER	M. WIGHT	BY	DATE
DESIGN-DETAILED	T. HUELM	LIBBY\MRP	MAR 2016
CHECKED-REVIEWED	B. REEVES	Team North	APRIL 2016
DESIGN2-DETAILED2	------	------	------
DESIGN3-DETAILED3	------	------	------
REVISIONS 1	------	------	------
REVISIONS 2	------	------	------
REVISIONS 3	------	------	------
REVISIONS 4	------	------	------
FIELD CHANGES	------	------	------

SIGNATURE

P.E. NUMBER

DATE

HAYNESVILLE BRIDGE
MATTAWAMKEAG RIVER
HAYNESVILLE AROOSTOOK COUNTY

ABUTMENT NO. 2 MODIFICATION

SHEET NUMBER

19

OF 34

Filename: ...\019_Abutment_No2_Modification.dgn Division: BRIDGE Username: david.sullivan Date:4/15/2016

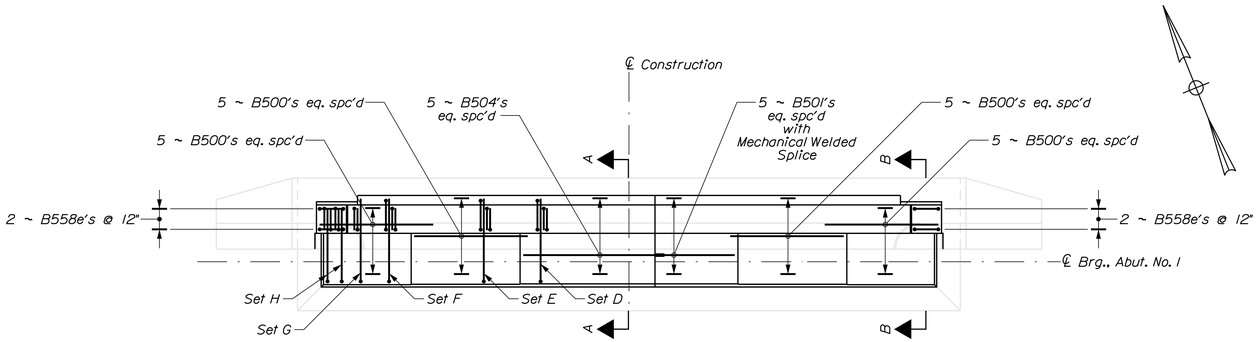

ABUTMENT NO. 2 PLAN - REINFORCEMENT

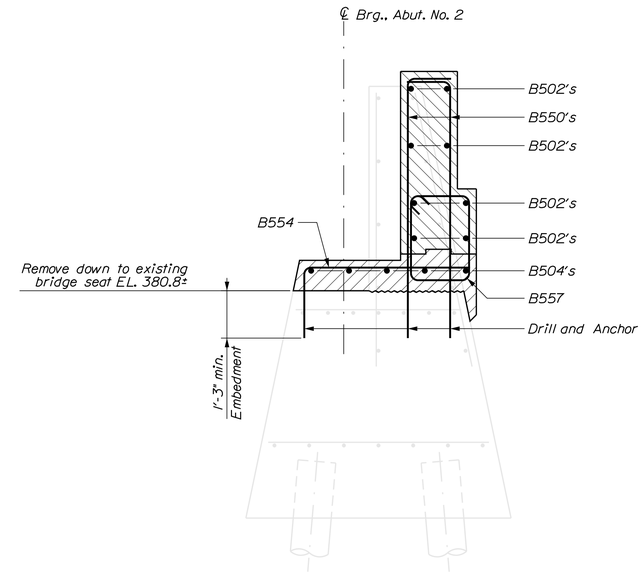

SECTION A-A

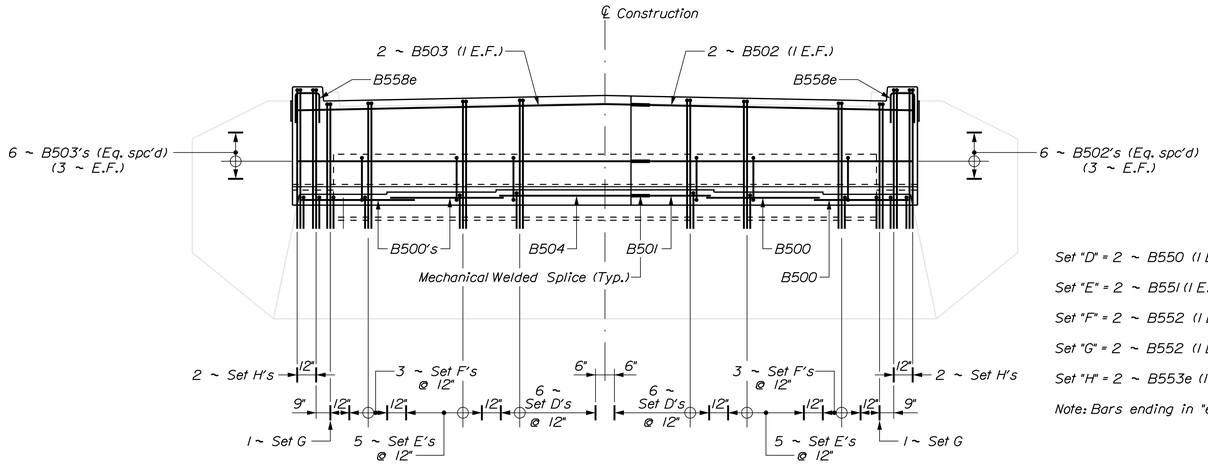

Set "D" = 2 ~ B550 (1 E.F.), 1 ~ B554 N.F., 1 ~ B557

Set "E" = 2 ~ B551 (1 E.F.), 1 ~ B555 N.F., 1 ~ B557

Set "F" = 2 ~ B552 (1 E.F.), 1 ~ B556 N.F., 1 ~ B557

Set "G" = 2 ~ B552 (1 E.F.), 1 ~ B556 N.F.

Set "H" = 2 ~ B553e (1 E.F.), 1 ~ B556 N.F.

Note: Bars ending in "e" are epoxy coated rebar

ABUTMENT NO. 2 ELEVATION - REINFORCEMENT

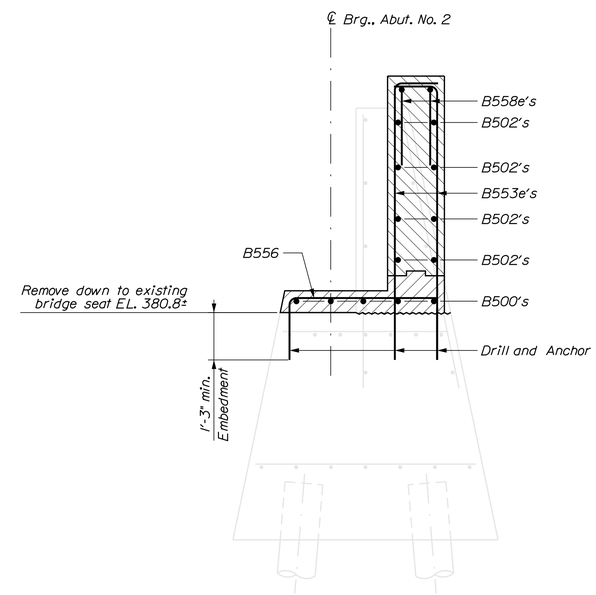

SECTION B-B

Note: Bars ending in "e" are epoxy coated rebar

STATE OF MAINE
DEPARTMENT OF TRANSPORTATION

STP-2050(900)

WIN 20509.00

BRIDGE NO. 5623

BRIDGE PLANS

PROJ. MANAGER	M. WIGHT	BY	DATE
DESIGN-DETAILED	T. HJELM	LIBBY\MRP	MAR 2016
CHECKED-REVIEWED	B. REEVES	Team North	APRIL 2016
DESIGN2-DETAILED2			
DESIGN3-DETAILED3			
REVISIONS 1			
REVISIONS 2			
REVISIONS 3			
REVISIONS 4			
FIELD CHANGES			

SIGNATURE

P.E. NUMBER

DATE

HAYNESVILLE BRIDGE
MATTAWAMKEAG RIVER
HAYNESVILLE AROOSTOOK COUNTY

ABUTMENT NO. 2 REINFORCEMENT

SHEET NUMBER

20

OF 34

Filename: ...\020_Abutment_No_2_Reinforcement.dgn Division: BRIDGE Username: david.sullivan Date:4/15/2016

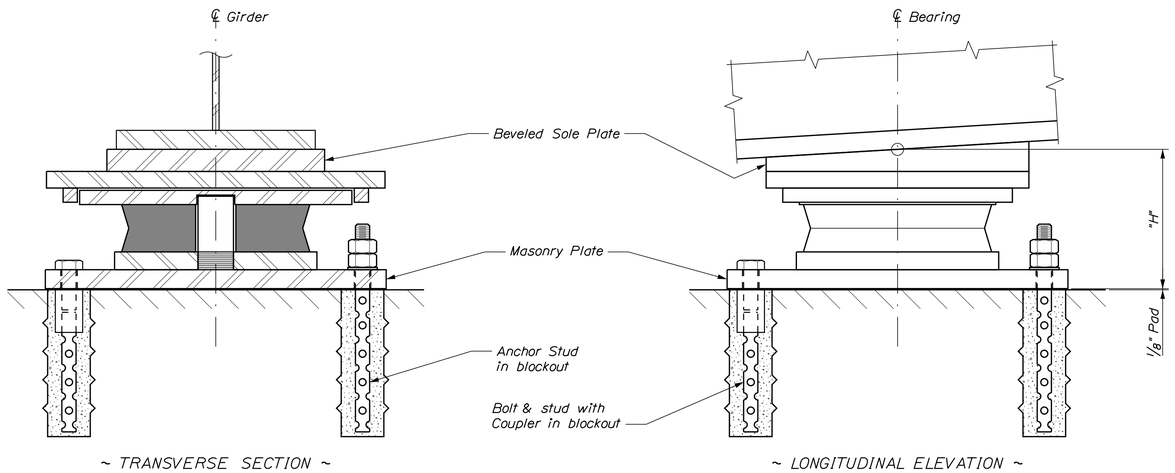

EXPANSION BEARING

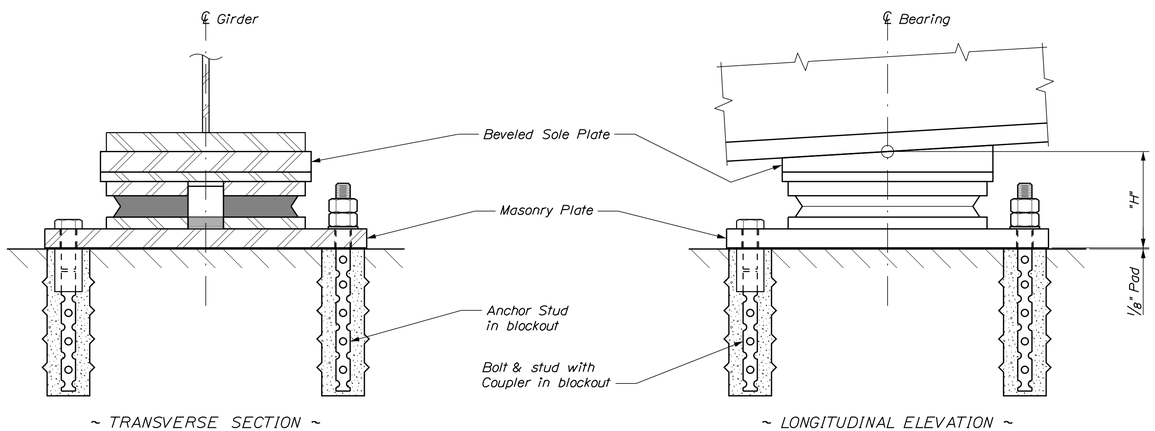

FIXED BEARING

DISC BEARING NOTES

1. The actual dimension "H" shall be the responsibility of the Contractor. Dimensions and sizes of plates not shown are dependent on design loads, capacity and the manufacturer of the bearings. The shop drawings, prepared by the manufacturer, shall provide all pertinent bearing information. The final bearing pedestal elevations shall be determined by the Contractor and submitted with the shop drawings for approval prior to construction of the substructure units.

2. Masonry plates shall be placed on 1/8" thick preformed pads in accordance with the specifications.

3. All steel, unless otherwise specified, shall meet the requirements of ASTM A709, Grade 50W.

4. Bearing anchorage shall be either Anchor Stud with double nuts and washers in blockout, or Bolt & Stud with Coupler in blockout, at the Contractor's option.

5. Anchorage spacing shall be coordinated with the bearing manufacturer.

6. Anchor bolts shall meet the requirements of ASTM A325, Type 1.

7. Anchor rods shall meet the requirements of ASTM F1554, Grade 105 and shall be swedged on the embedded portion of the rod.

8. Heavy hex nuts for anchor rods shall meet the requirements of ASTM A563, Grade D or DH.

9. Anchor bolts, rods, washers and nuts shall be galvanized to ASTM A153 or ASTM B695, Class 50, Type 1. Payment for galvanizing will be considered incidental to the disc bearing pay items.

10. For abutment bearings, all steel located below the polyether urethane disc shall be coated in accordance with Standard Specifications, Section 506, Protective Coating - Steel (Thermal Spray Coating). All remaining steel shall be coated in accordance with Standard Specifications, Section 506, Protective Coating - Steel (Zinc Rich Coating System). Payment for Coatings for Disc Bearings will be considered incidental to Item 523.5551, Pot or Disc Bearings, Fixed, or Item 523.5552, Pot or Disc Bearings, Expansion as applicable.

11. For pier bearings, all steel located below the polyether urethane disc shall be coated in accordance with Standard Specifications, Section 506, Protective Coating - Steel (Thermal Spray Coating). All remaining steel shall remain uncoated. Payment for Coatings for Disc Bearings will be considered incidental to Item 523.5551, Pot or Disc Bearings, Fixed, or Item 523.5552, Pot or Disc Bearings, Expansion as applicable.

12. The abbreviation "PTFE" indicates polytetraflouroethylene.

13. All PTFE, including guide and restraint surfaces, shall be unfilled.

14. PTFE minimum bearing pressure shall be 1 ksi under total service loading and 3 ksi under total strength loading.

15. Average compressive stresses on the disc shall be computed using the minimum plan area of the unstressed disc, excluding the area of any holes.

16. The design temperature range shall be 125°F (-20°F to 105°F).

17. Design of the sole plates and masonry plates is the responsibility of the Bearing Manufacturer. Payment for these shall be made under Item 523.5551, Pot or Disc Bearings, Fixed or Item 523.5552, Pot or Disc Bearings, Expansion as applicable.

18. Sole plate shall be beveled according to the grade defined at each substructure location in the Disc Bearing Design Table.

19. Strength Limit State rotations shown in the Disc Bearing Design Table do not include an allowance for uncertainties of 0.005 radians, as defined in AASHTO LRFD Bridge Design Specifications, 6th Edition 2012.

20. Bearings shall be designed with a thermal load factor of 1.0.

21. Longitudinal horizontal forces do not include friction forces at expansion bearings.

22. All bearings shall be marked prior to shipping. The marks shall include the bearing location on the bridge, and a direction arrow that points upstation. All marks shall be permanent and shall be visible after the bearing is installed.

23. Bearing installation shall be in strict conformance with the Standard Specifications and the manufacturer's recommendations.

24. In the Disc Bearing Setting Corrections Table, a negative dimension indicates a direction away from the nearer expansion joint. A positive dimension indicates a direction toward the nearer expansion joint.

25. Temperatures shown in the Disc Bearing Setting Corrections Table are those of the steel girders and not necessarily the ambient air temperature.

26. Pier No. 1 bearings shall be welded to the girder prior to welding of any other bearings. Bearing stiffeners at Pier No. 2 shall be within 1/2 inch of the centerline of bearing at the time of welding.

DISC BEARING DESIGN TABLE

Location	Bearing Type	Design Loads Per Bearing (kips)										Dim. "H" (in.) (Note No. 1)	Design Rotation (Note No. 19)				Total Long. Movement (in.)	Sole Plate Bevel
		Vertical				Horizontal							Strength		Service			
		Strength	Extreme Event	Service		Strength		Extreme Event		Service								
		Total Load	Total Load	Dead Load	Total Load	Longitudinal (Note No. 21)	Transverse	Longitudinal (Note No. 21)	Transverse	Longitudinal (Note No. 21)	Transverse		Rotation (radians)	Coincident Total Load (kips)	Rotation (radians)	Coincident Total Load (kips)		
Abut. No. 1	Uni-Directional	189	89	35	122	-	10	-	62	-	5				.0108	103	1-7/8	0.687
Pier No. 1	Fixed	270	140	64	180	60	21	68	90	42	10				.0086	154	1-1/16	0.273
Pier No. 1	Uni-Directional	270	140	64	180	-	21	-	90	-	10				.0086	154	-	0.273
Abut. No. 2	Uni-Directional	189	89	35	122	-	10	-	62	-	5				.0108	103	13/16	0.687

DISC BEARING SETTING CORRECTIONS TABLE

	Dimension "X" (Inches)					
	15 °F	30 °F	45 °F	60 °F	75 °F	90 °F
Abut. No. 1	-7/16	-1/4	0	1/4	7/16	11/16
Pier No. 1	-1/4	-1/8	0	1/8	1/4	3/8
Pier No. 1	0	0	0	0	0	0
Abut. No. 2	3/16	1/8	0	1/8	3/16	5/16

STATE OF MAINE
DEPARTMENT OF TRANSPORTATION

STP-2050(900)

WIN 20509.00

BRIDGE NO. 5823

BRIDGE PLANS

PROJ. MANAGER	M. WIGHT	BY	DATE
DESIGN-DETAILED	T. HJELM	LIBBY\MRP	MAR 2016
CHECKED-REVIEWED	B. REEVES	Team North	APRIL 2016
DESIGN2-DETAILED2			
DESIGN3-DETAILED3			
REVISIONS 1			
REVISIONS 2			
REVISIONS 3			
REVISIONS 4			
FIELD CHANGES			

SIGNATURE

P.E. NUMBER

DATE

HAYNESVILLE BRIDGE
MATTAWAMKEAG RIVER
HAYNESVILLE AROOSTOOK COUNTY

DISC BEARINGS

SHEET NUMBER

21

OF 34

Filename: ...\MSTA\021_Disc_Bearings.dgn Division: BRIDGE Username: david.sullivan Date:4/15/2016

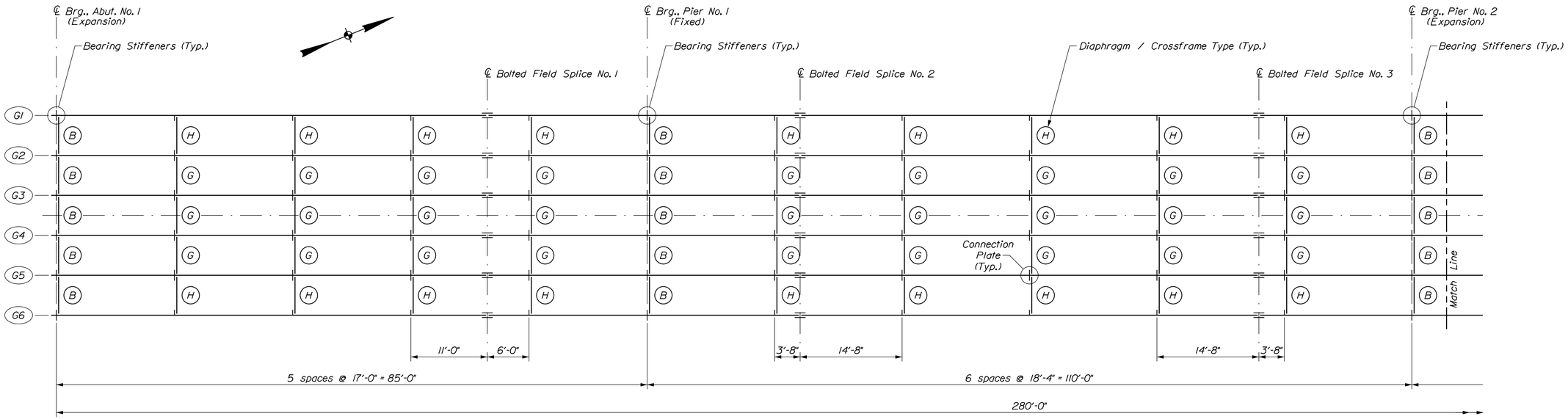

FRAMING PLAN - SPAN NO. 1 AND 2

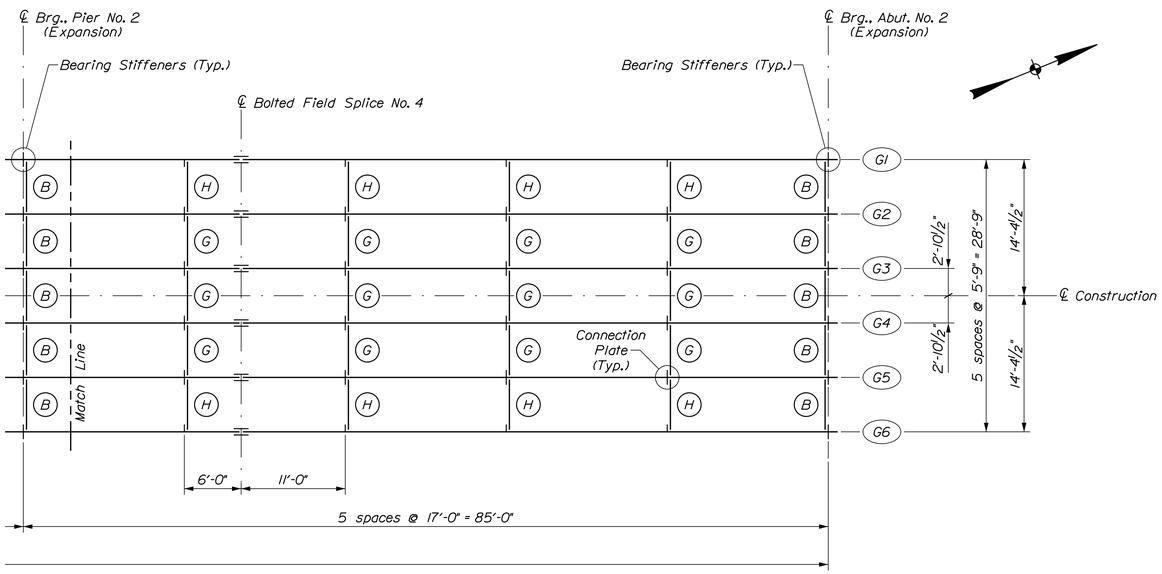

FRAMING PLAN - SPAN NO. 3

BOTTOM OF SLAB ELEVATIONS

Span No. 1

Girder	℄ A1	8.5'	17'	25.5'	34'	42.5'	51'	59.5'	68'	76.5'	℄ P1	Girder
G1	385.39	385.47	385.55	385.62	385.67	385.72	385.74	385.77	385.78	385.80	385.83	G1
G2	385.50	385.59	385.67	385.74	385.79	385.84	385.86	385.89	385.90	385.91	385.94	G2
G3	385.62	385.70	385.79	385.85	385.91	385.96	385.97	386.00	386.01	386.03	386.06	G3
G4	385.62	385.70	385.79	385.85	385.91	385.96	385.97	386.00	386.01	386.03	386.06	G4
G5	385.50	385.59	385.67	385.74	385.79	385.84	385.86	385.89	385.90	385.91	385.94	G5
G6	385.39	385.47	385.55	385.62	385.67	385.72	385.74	385.77	385.78	385.80	385.83	G6

Span No. 2

Girder	℄ P1	11'	22'	33'	44'	55'	66'	77'	88'	99'	℄ P2	Girder
G1	385.83	385.87	385.92	385.97	386.00	386.01	386.00	385.97	385.92	385.87	385.83	G1
G2	385.94	385.99	386.04	386.09	386.13	386.14	386.13	386.09	386.04	385.99	385.94	G2
G3	386.06	386.10	386.16	386.21	386.24	386.25	386.24	386.21	386.16	386.10	386.06	G3
G4	386.06	386.10	386.16	386.21	386.24	386.25	386.24	386.21	386.16	386.10	386.06	G4
G5	385.94	385.99	386.04	386.09	386.13	386.14	386.13	386.09	386.04	385.99	385.94	G5
G6	385.83	385.87	385.92	385.97	386.00	386.01	386.00	385.97	385.92	385.87	385.83	G6

Span No. 3

Girder	℄ P2	8.5'	17'	25.5'	34'	42.5'	51'	59.5'	68'	76.5'	℄ A2	Girder
G1	385.83	385.80	385.78	385.77	385.74	385.72	385.67	385.62	385.55	385.47	385.39	G1
G2	385.94	385.91	385.90	385.89	385.86	385.84	385.79	385.74	385.67	385.59	385.50	G2
G3	386.06	386.03	386.01	386.00	385.97	385.96	385.91	385.85	385.79	385.70	385.62	G3
G4	386.06	386.03	386.01	386.00	385.97	385.96	385.91	385.85	385.79	385.70	385.62	G4
G5	385.94	385.91	385.90	385.89	385.86	385.84	385.79	385.74	385.67	385.59	385.50	G5
G6	385.83	385.80	385.78	385.77	385.74	385.72	385.67	385.62	385.55	385.47	385.39	G6

STATE OF MAINE
DEPARTMENT OF TRANSPORTATION

STP-2050(900)

WIN 20509.00

BRIDGE NO. 5823

BRIDGE PLANS

		BY	DATE
PROJ. MANAGER	M. WIGHT		
DESIGN-DETAILED	T. HUELM	LIBBY\MRP	MAR 2016
CHECKED-REVIEWED	B. REEVES	Team North	APRIL 2016
DESIGN2-DETAILED2	------	------	------
DESIGN3-DETAILED3	------	------	------
REVISIONS 1	------	------	------
REVISIONS 2	------	------	------
REVISIONS 3	------	------	------
REVISIONS 4	------	------	------
FIELD CHANGES	------	------	------

SIGNATURE

P.E. NUMBER

DATE

HAYNESVILLE BRIDGE
MATTAWAMKEAG RIVER
HAYNESVILLE AROOSTOOK COUNTY

FRAMING PLAN

SHEET NUMBER

22

OF 34

Filename: ...\00\BRIDGE\MSTA\022_Framing.dgn Division: BRIDGE Username: david.sullivan Date:4/15/2016

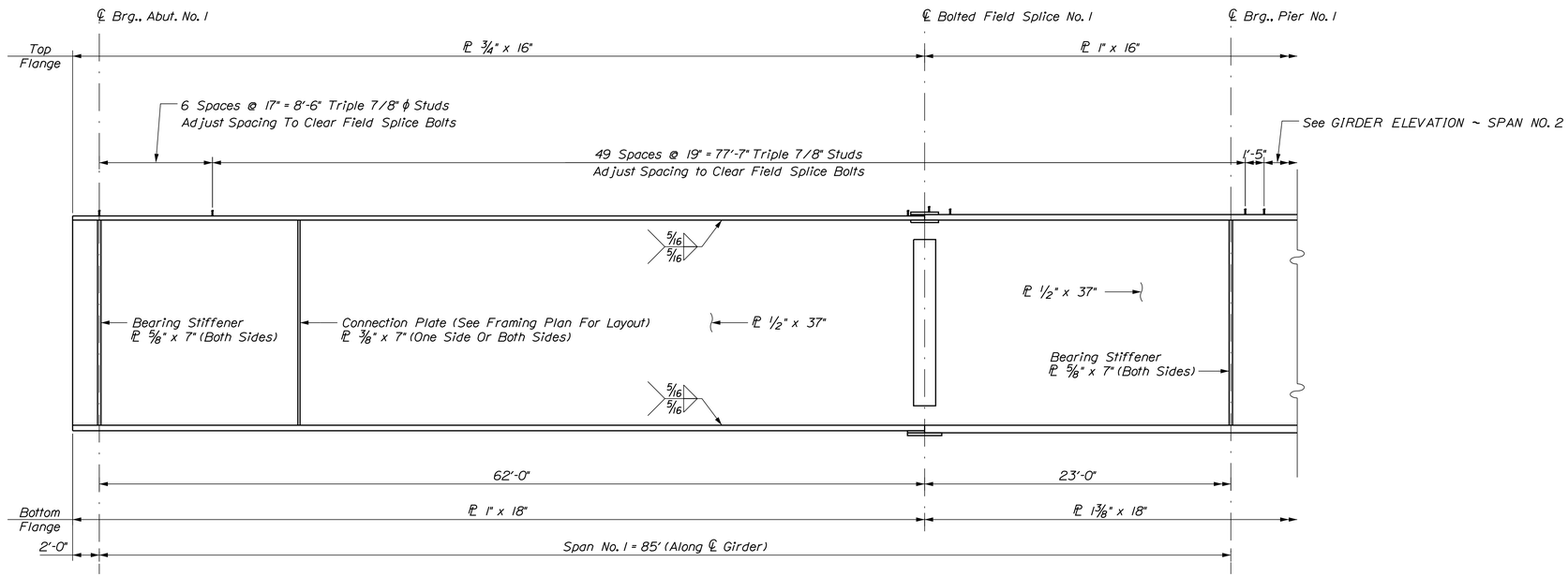

GIRDER ELEVATION ~ SPAN NO. 1

STRUCTURAL STEEL NOTES

1. Camber ordinates, as shown, are computed to compensate for all dead load deflections and for the curvature of the finished grade profile.

2. No transverse butt weld splices will be allowed in the flange plates or web plates within 10 feet or 10 percent of the span length (whichever is greater) from the points of maximum negative moment or maximum positive moment. Butt weld splices in flanges shall be not less than one foot from transverse butt welds in the web plates and no transverse web or flange butt welds shall be located within one foot of other transverse welds (e.g. connection plates to web welds) on either flange or web. No transverse butt weld splices will be allowed in areas of stress reversal.

3. Sections of flange plates or web plates between transverse shop splices or between a transverse shop splice and a field splice shall be not less than 20 feet in length unless otherwise shown on the plans.

4. Bearing stiffeners shall be plumb after erection and dead loading of the structure. Intermediate web stiffeners may be either plumb or normal to the top flange.

5. Crossframe or diaphragm connection plates may be either plumb or normal to the top flange.

6. All connection plates and stiffeners shall be weilded to the top and bottom flanges using 5/16" fillet welds.

7. Girder ends and end diaphragms shall be coated to a distance of 10 feet from the centerline of bearing in accordance with Standard Specifications Section 506, Shop Applied Protective Coating - Steel (Zinc Rich Coating System). Color shall conform to Federal Color Number 30045 (brown).

STATE OF MAINE
DEPARTMENT OF TRANSPORTATION

STP-2050(900)

WIN 20509.00

BRIDGE NO. 5623

BRIDGE PLANS

		BY	DATE
PROJ. MANAGER	M. WIGHT		
DESIGN-DETAILED	T. HUELM	LIBBY\MRP	MAR 2016
CHECKED-REVIEWED	B. REEVES	Team North	APRIL 2016
DESIGN2-DETAILED2	------	------	------
DESIGN3-DETAILED3	------	------	------
REVISIONS 1	------	------	------
REVISIONS 2	------	------	------
REVISIONS 3	------	------	------
REVISIONS 4	------	------	------
FIELD CHANGES	------	------	------

SIGNATURE

P.E. NUMBER

DATE

HAYNESVILLE BRIDGE
MATTAWAMKEAG RIVER
HAYNESVILLE AROOSTOOK COUNTY

SPAN NO. 1 DETAILS

SHEET NUMBER

23

OF 34

Filename: ...\00\BRIDGE\MSTA\023_Span-1.dgn Division: BRIDGE Username: david.sullivan Date:4/15/2016

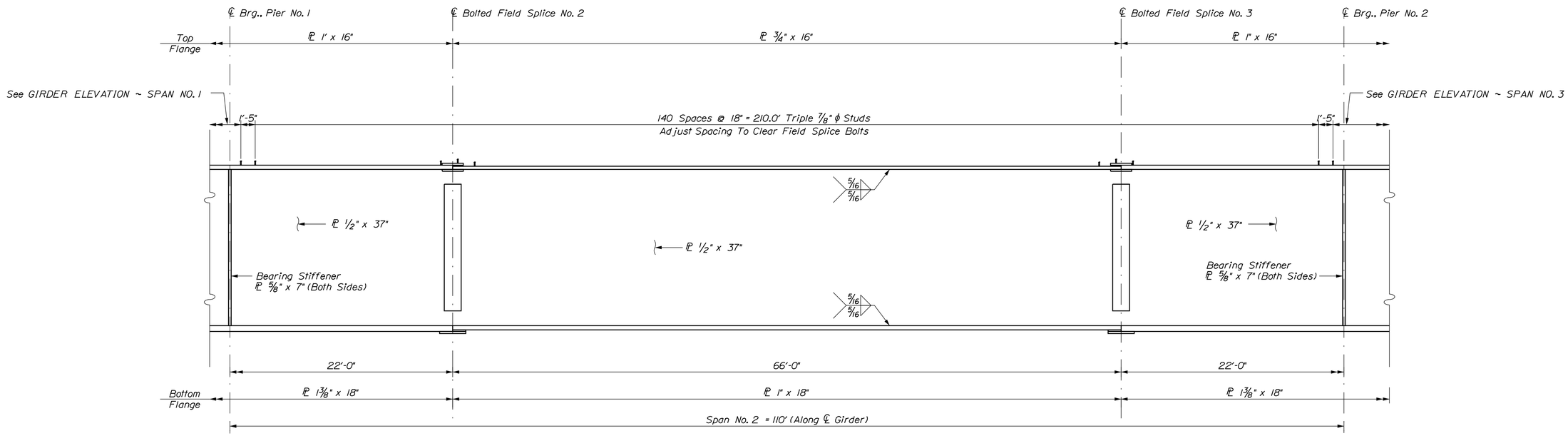

GIRDER ELEVATION ~ SPAN NO. 2

TABLE OF DEFLECTIONS ~ EXTERIOR (Inches)

		Piece No. 1						Piece No. 2				Piece No. 3						Piece No. 4				Piece No. 5					
	℄ A1	10.33	20.67	31.00	41.33	51.67	FS1	11.5	℄ P1	11	FS2	11	22	33	44	55	FS3	11	℄ P2	11.5	FS4	51.67	41.33	31.00	20.67	10.33	℄ A2
Steel Dead Load	0	0.1	0.17	0.21	0.2	0.16	0.09	0.02	0	0.05	0.14	0.23	0.3	0.33	0.3	0.23	0.14	0.05	0	0.02	0.09	0.16	0.2	0.21	0.17	0.1	0
Fluid Dead Load	0	0.29	0.5	0.61	0.59	0.46	0.27	0.07	0	0.14	0.39	0.67	0.87	0.94	0.87	0.67	0.39	0.14	0	0.07	0.27	0.46	0.59	0.61	0.5	0.29	0
Superimposed Dead Load	0	0.09	0.16	0.19	0.19	0.15	0.09	0.02	0	0.06	0.15	0.25	0.32	0.34	0.32	0.25	0.15	0.06	0	0.02	0.09	0.15	0.19	0.19	0.16	0.09	0

TABLE OF DEFLECTIONS ~ INTERIOR (Inches)

		Piece No. 1						Piece No. 2				Piece No. 3						Piece No. 4				Piece No. 5					
	℄ A1	10.33	20.67	31.00	41.33	51.67	FS1	11.5	℄ P1	11	FS2	11	22	33	44	55	FS3	11	℄ P2	11.5	FS4	51.67	41.33	31.00	20.67	10.33	℄ A2
Steel Dead Load	0	0.1	0.17	0.21	0.2	0.16	0.09	0.02	0	0.05	0.14	0.23	0.3	0.33	0.3	0.23	0.14	0.05	0	0.02	0.09	0.16	0.2	0.21	0.17	0.1	0
Fluid Dead Load	0	0.33	0.57	0.69	0.67	0.52	0.31	0.08	0	0.16	0.45	0.76	.99	1.07	0.99	0.76	0.45	0.16	0	0.08	0.31	0.52	0.67	0.69	0.57	0.33	0
Superimposed Dead Load	0	0.09	0.15	0.19	0.18	0.14	0.09	0.02	0	0.06	0.15	0.25	0.32	0.34	0.32	0.25	0.15	0.06	0	0.02	0.09	0.14	0.18	0.19	0.15	0.09	0

STATE OF MAINE
DEPARTMENT OF TRANSPORTATION

STP-2050(900)

WIN 20509.00

BRIDGE NO. 5823

BRIDGE PLANS

		BY	DATE
PROJ. MANAGER	M. WIGHT		
DESIGN-DETAILED	T. HUELM	LIBBY\MRP	MAR 2016
CHECKED-REVIEWED	B. REEVES	Team North	APRIL 2016
DESIGN2-DETAILED2	------	------	------
DESIGN3-DETAILED3	------	------	------
REVISIONS 1	------	------	------
REVISIONS 2	------	------	------
REVISIONS 3	------	------	------
REVISIONS 4	------	------	------
FIELD CHANGES	------	------	------

SIGNATURE

P.E. NUMBER

DATE

HAYNESVILLE BRIDGE
MATTAWAMKEAG RIVER
HAYNESVILLE AROOSTOOK COUNTY

SPAN 2 DETAILS

SHEET NUMBER

24

OF 34

Filename: ...\00\BRIDGE\MSTA\024_Span-2.dgn Division: BRIDGE Username: david.sullivan Date:4/15/2016

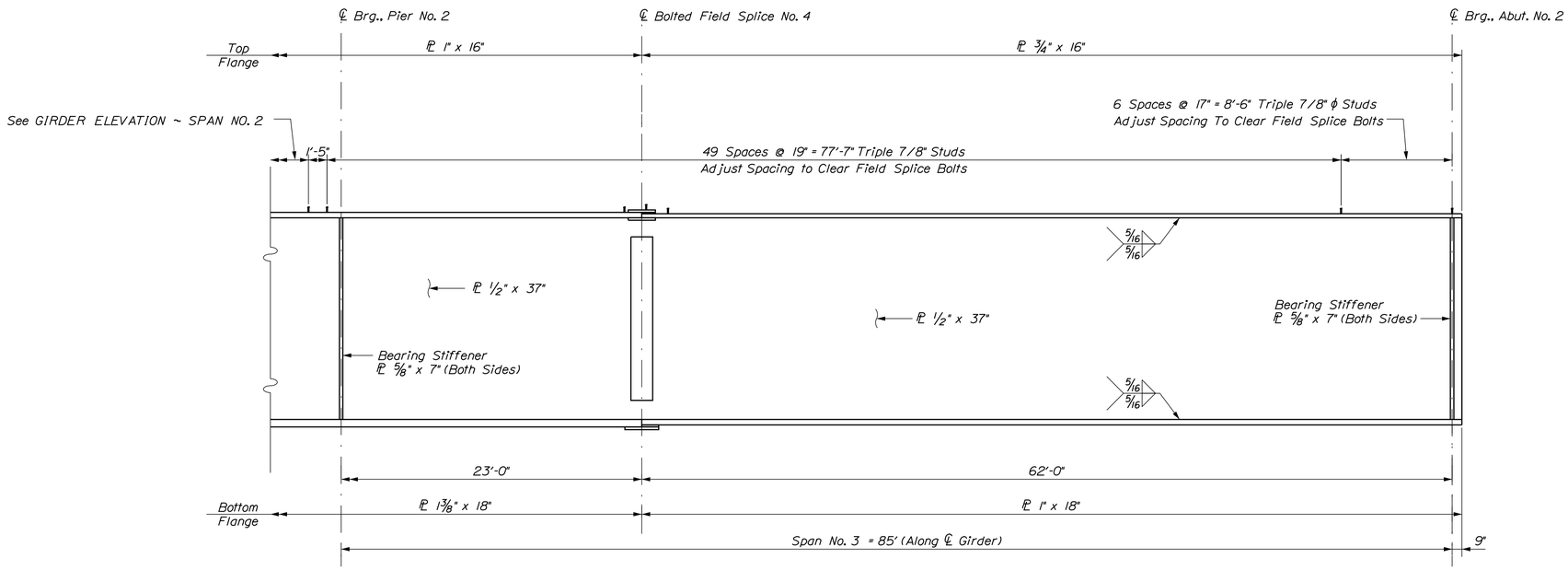

GIRDER ELEVATION ~ SPAN NO. 3

STATE OF MAINE
DEPARTMENT OF TRANSPORTATION

STP-2050(900)

WIN 20509.00

BRIDGE NO. 5823

BRIDGE PLANS

PROJ. MANAGER	M. WIGHT	BY	DATE
DESIGN-DETAILED	T. HUELM	LIBBY\MRP	MAR 2016
CHECKED-REVIEWED	B. REEVES	Team North	APRIL 2016
DESIGN2-DETAILED2	------	------	------
DESIGN3-DETAILED3	------	------	------
REVISIONS 1	------	------	------
REVISIONS 2	------	------	------
REVISIONS 3	------	------	------
REVISIONS 4	------	------	------
FIELD CHANGES	------	------	------

SIGNATURE

P.E. NUMBER

DATE

HAYNESVILLE BRIDGE
MATTAWAMKEAG RIVER
HAYNESVILLE AROOSTOOK COUNTY

SPAN 3 DETAILS

SHEET NUMBER

25

OF 34

Filename: ...\00\BRIDGE\MSTA\025_Span-3.dgn Division: BRIDGE Username: david.sullivan Date:4/15/2016

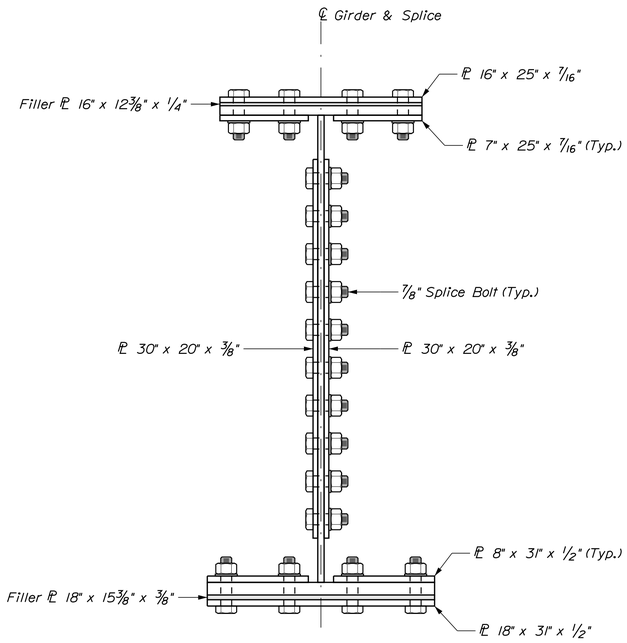

SECTION A-A

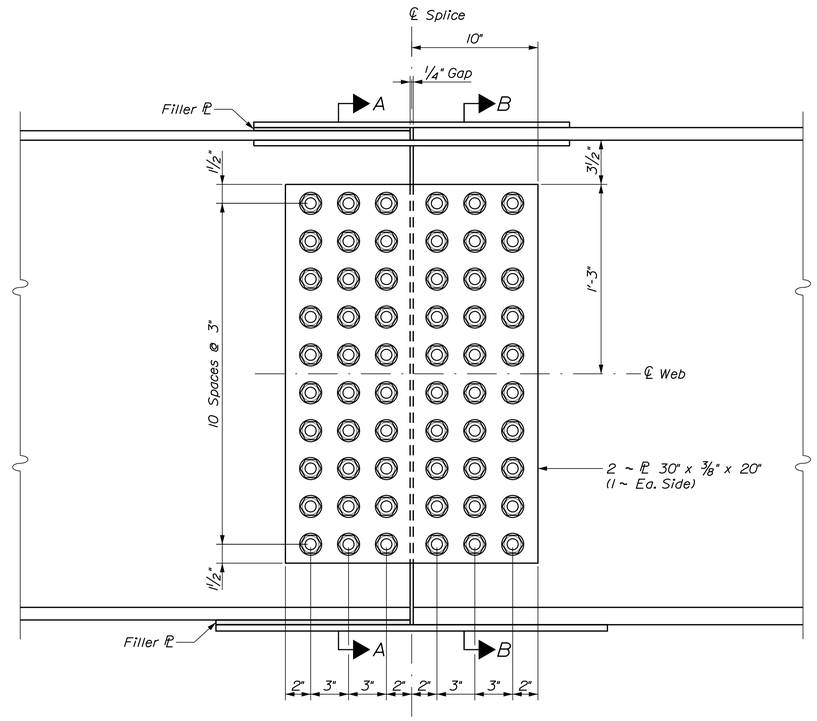

SPLICE ELEVATION
(Bolts On Flange Plates Not Shown For Clarity)

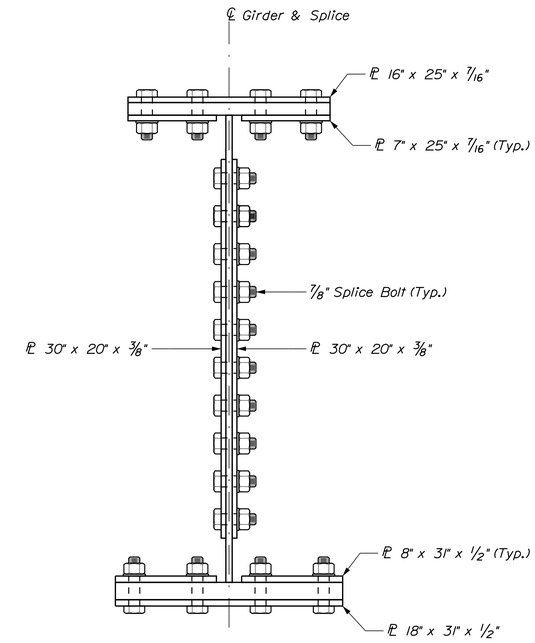

SECTION B-B

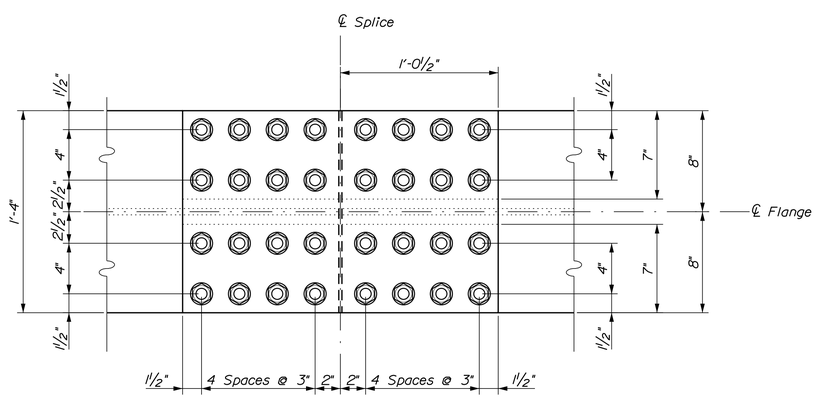

TOP FLANGE SPLICE

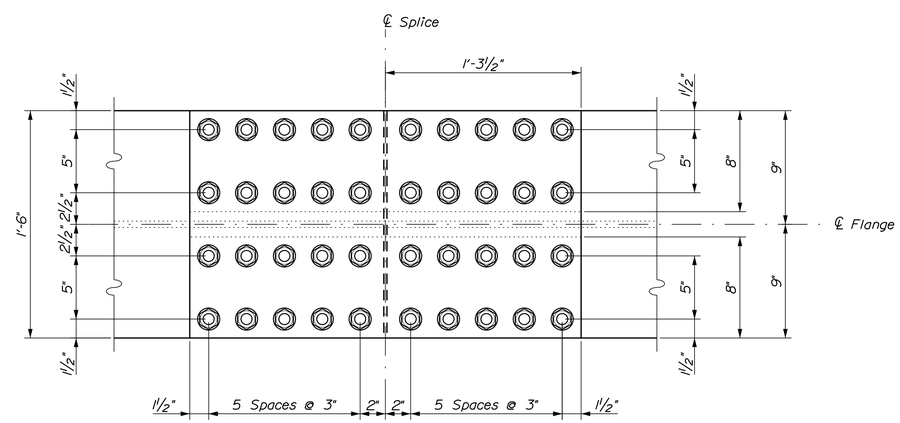

BOTTOM FLANGE SPLICE

STATE OF MAINE
DEPARTMENT OF TRANSPORTATION

STP-2050(900)

WIN 20509.00

BRIDGE NO. 5623

BRIDGE PLANS

PROJ. MANAGER	M. WIGHT	BY	DATE
DESIGN-DETAILED	T. HUELM	LIBBY/MRP	MAR 2016
CHECKED-REVIEWED	B. REEVES	Team North	APRIL 2016
DESIGN2-DETAILED2			
DESIGN3-DETAILED3			
REVISIONS 1			
REVISIONS 2			
REVISIONS 3			
REVISIONS 4			
FIELD CHANGES			

SIGNATURE

P.E. NUMBER

DATE

HAYNESVILLE BRIDGE
MATTAWAMKEAG RIVER
HAYNESVILLE AROOSTOOK COUNTY

SPLICE PLATE DETAIL

SHEET NUMBER
26
OF 34

Filename: ...\MSTA\026_Splice_Plates.dgn Division: BRIDGE Username: david.sullivan Date:4/15/2016

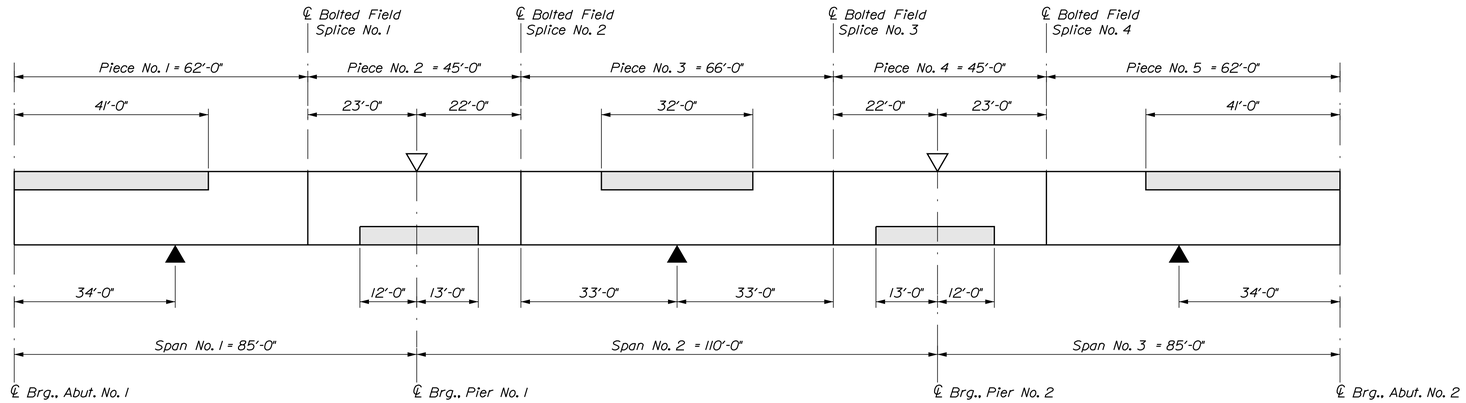

GIRDER STRESS DIAGRAM

▽ Maximum Negative Moment ▲ Maximum Positive Moment

Shaded Areas Are Always In Compression
Other Areas Are In Tension Or Have Stress Reversal.

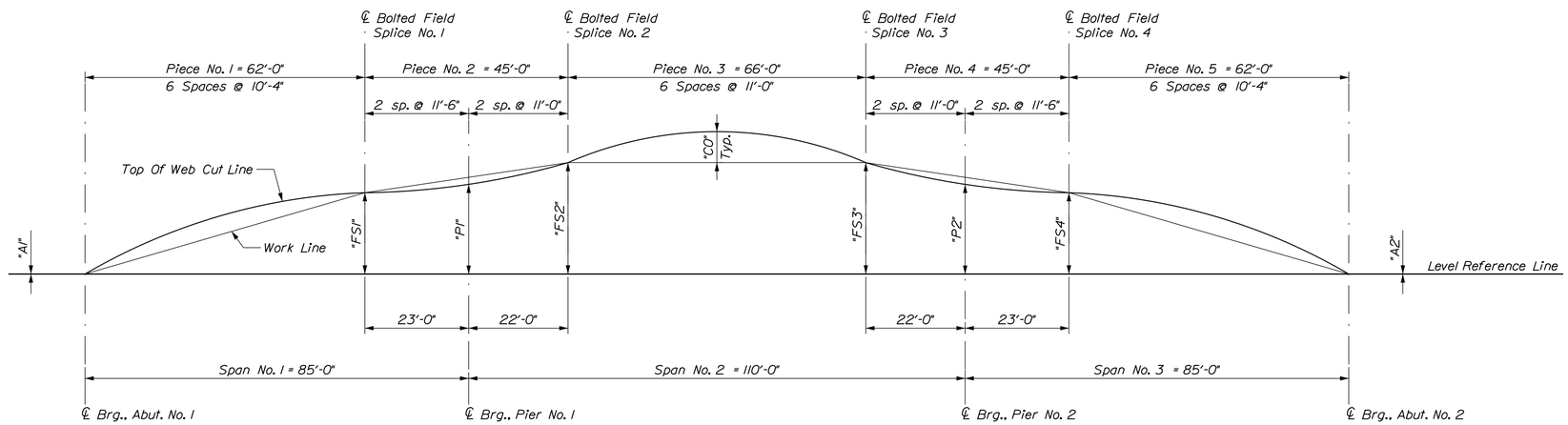

CAMBER DIAGRAM

TABLE OF CAMBER DIMENSIONS (Feet)

Girder	"A1"	"FS1"	"P1"	"FS2"	"FS3"	"P2"	"FS4"	"A2"	Girder
G1	0	0.40	0.44	0.55	0.55	0.44	0.40	0	G1
G2	0	0.40	0.44	0.55	0.55	0.44	0.40	0	G2
G3	0	0.40	0.44	0.55	0.55	0.44	0.40	0	G3
G4	0	0.40	0.44	0.55	0.55	0.44	0.40	0	G4
G5	0	0.40	0.44	0.55	0.55	0.44	0.40	0	G5
G6	0	0.40	0.44	0.55	0.55	0.44	0.40	0	G6

TABLE OF CAMBER ORDINATES "CO" (Inches)

		Piece No. 1						Piece No. 2				Piece No. 3						Piece No. 4				Piece No. 5						
Girder	℄ A1	10.33	20.67	31.00	41.33	51.67	FS1	11.5	℄ P1	11	FS2	11	22	33	44	55	FS3	11.5	℄ P2	11	FS4	51.67	41.33	31.00	20.67	10.33	℄ A2	Girder
G1	0	1/2	15/16	1	15/16	1/2	0	- 5/16	- 3/8	- 1/4	0	11/16	13/16	15/16	13/16	11/16	0	- 5/16	- 3/8	1/4	0	1/2	15/16	1	15/16	1/2	0	G1
G2	0	9/16	15/16	1 1/16	15/16	9/16	0	- 3/8	- 7/16	- 1/4	0	3/4	1 1/4	1 3/8	1 1/4	3/4	0	- 3/8	- 7/16	1/4	0	9/16	15/16	1 1/16	15/16	9/16	0	G2
G3	0	9/16	15/16	1 1/16	15/16	9/16	0	- 3/8	- 7/16	- 1/4	0	3/4	1 1/4	1 3/8	1 1/4	3/4	0	- 3/8	- 7/16	1/4	0	9/16	15/16	1 1/16	15/16	9/16	0	G3
G4	0	9/16	15/16	1 1/16	15/16	9/16	0	- 3/8	- 7/16	- 1/4	0	3/4	1 1/4	1 3/8	1 1/4	3/4	0	- 3/8	- 7/16	1/4	0	9/16	15/16	1 1/16	15/16	9/16	0	G4
G5	0	9/16	15/16	1 1/16	15/16	9/16	0	- 3/8	- 7/16	- 1/4	0	3/4	1 1/4	1 3/8	1 1/4	3/4	0	- 3/8	- 7/16	1/4	0	9/16	15/16	1 1/16	15/16	9/16	0	G5
G6	0	1/2	15/16	1	15/16	1/2	0	- 5/16	- 3/8	- 1/4	0	11/16	13/16	15/16	13/16	11/16	0	- 5/16	- 3/8	1/4	0	1/2	15/16	1	15/16	1/2	0	G6

STATE OF MAINE
DEPARTMENT OF TRANSPORTATION

STP-2050(900)

WIN 20509.00

BRIDGE NO. 5823

BRIDGE PLANS

PROJ. MANAGER	M. WIGHT			
DESIGN-DETAILED	T. HUELM	LIBBY\MRP	MAR 2016	
CHECKED-REVIEWED	B. REEVES	Team North	APRIL 2016	
DESIGN2-DETAILED2				
DESIGN3-DETAILED3				
REVISIONS 1				
REVISIONS 2				
REVISIONS 3				
REVISIONS 4				
FIELD CHANGES				

SIGNATURE

P.E. NUMBER

DATE

HAYNESVILLE BRIDGE
MATTAWAMKEAG RIVER
HAYNESVILLE AROOSTOOK COUNTY

CAMBER & STRESS DIAGRAM

SHEET NUMBER
27
OF 34

Filename: ...\027_Camber_Stress_Diagram.dgn Division: BRIDGE Username: david.sullivan Date:4/15/2016

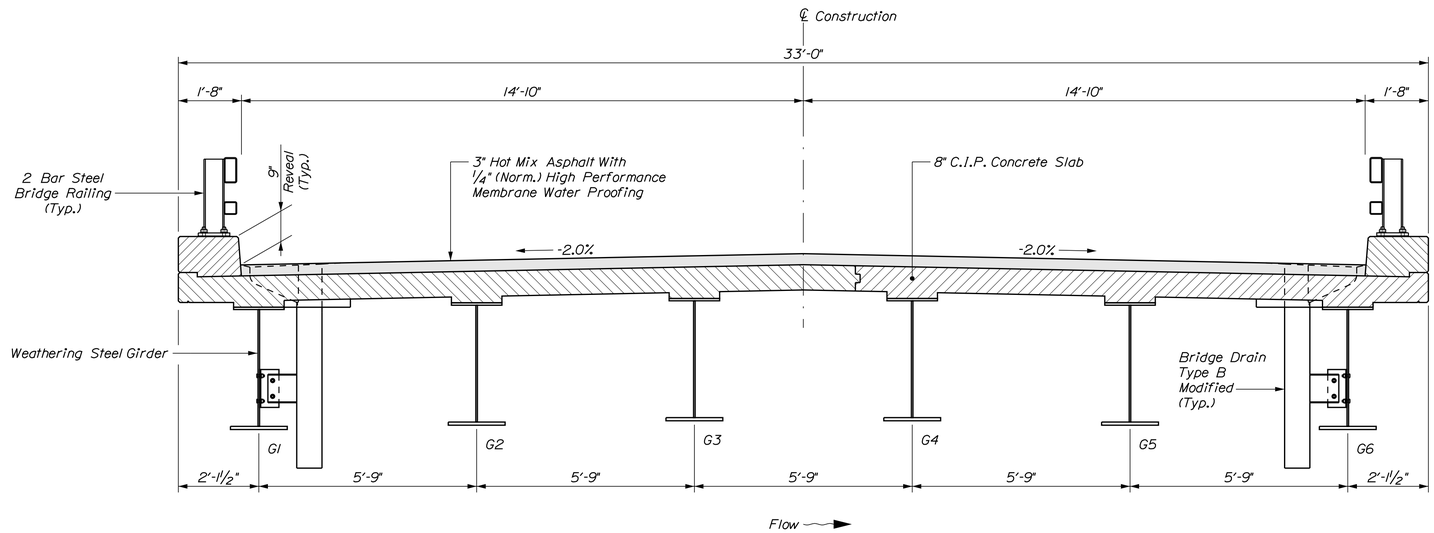

TYPICAL BRIDGE SECTION

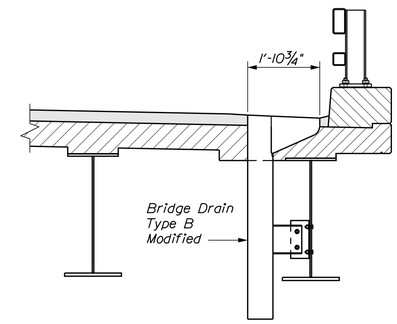

TYPICAL BRIDGE DRAIN

Note: The only difference between the Bridge Drain Type B taken from Standard Details, Section 502 and the Modified Bridge Drain Type B is the pan size. The pan length has been increased by 6 3/4" to accommodate for the clearence from the bottom flange of the girder. For additional information not shown, use Bridge Drain Type B Standard Detail.

SUPERSTRUCTURE NOTES

1. The theoretical blocking used for design of the structure is 3 inches at the centerline of bearing of the abutments and piers. Refer to Standard Detail 502(03) for blocking details.

2. Reinforcing steel shall have a minimum concrete cover of 2 inches unless otherwise noted.

3. Adjust reinforcing steel to fit around the bridge drains in a manner approved by the Resident. Do not cut transverse reinforcing bars.

4. Form a one inch V-groove on the fascias at the horizontal joint between the curb and slab.

5. The superstructure slab concrete for each span shall be placed continuously and shall be kept plastic until the entire placement has been made.

6. The Contractor shall install Transition Barrier vertical closed stirrups, as shown in Standard Details Section 526, prior to the placement of the curb or sidewalk concrete.

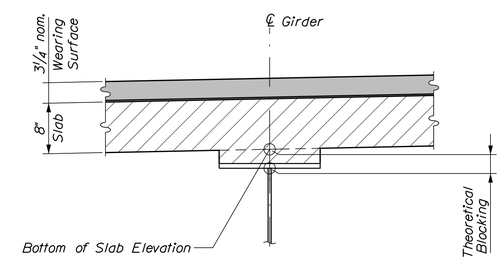

BLOCKING DETAIL

Theoretical blocking is 3" at ℄ Brg., Abutments and Piers
(Do not use theoretical blocking to set forms)

STATE OF MAINE
DEPARTMENT OF TRANSPORTATION

STP-2050(900)

WIN 20509.00

BRIDGE NO. 5623

BRIDGE PLANS

PROJ. MANAGER	M. WIGHT	BY	DATE
DESIGN-DETAILED	T. HJELM	LIBBY\MRP	MAR 2016
CHECKED-REVIEWED	B. REEVES	Team North	APRIL 2016
DESIGN2-DETAILED2	------	------	------
DESIGN3-DETAILED3	------	------	------
REVISIONS 1	------	------	------
REVISIONS 2	------	------	------
REVISIONS 3	------	------	------
REVISIONS 4	------	------	------
FIELD CHANGES	------	------	------

SIGNATURE

P.E. NUMBER

DATE

HAYNESVILLE BRIDGE
MATTAWAMKEAG RIVER
HAYNESVILLE AROOSTOOK COUNTY

SUPERSTRUCTURE SECTION AND SUPERSTRUCTURE NOTES

SHEET NUMBER

28

OF 34

Filename: ...\028_BidgeSection&Notes.dgn Division: BRIDGE Username: david.sullivan Date:4/15/2016

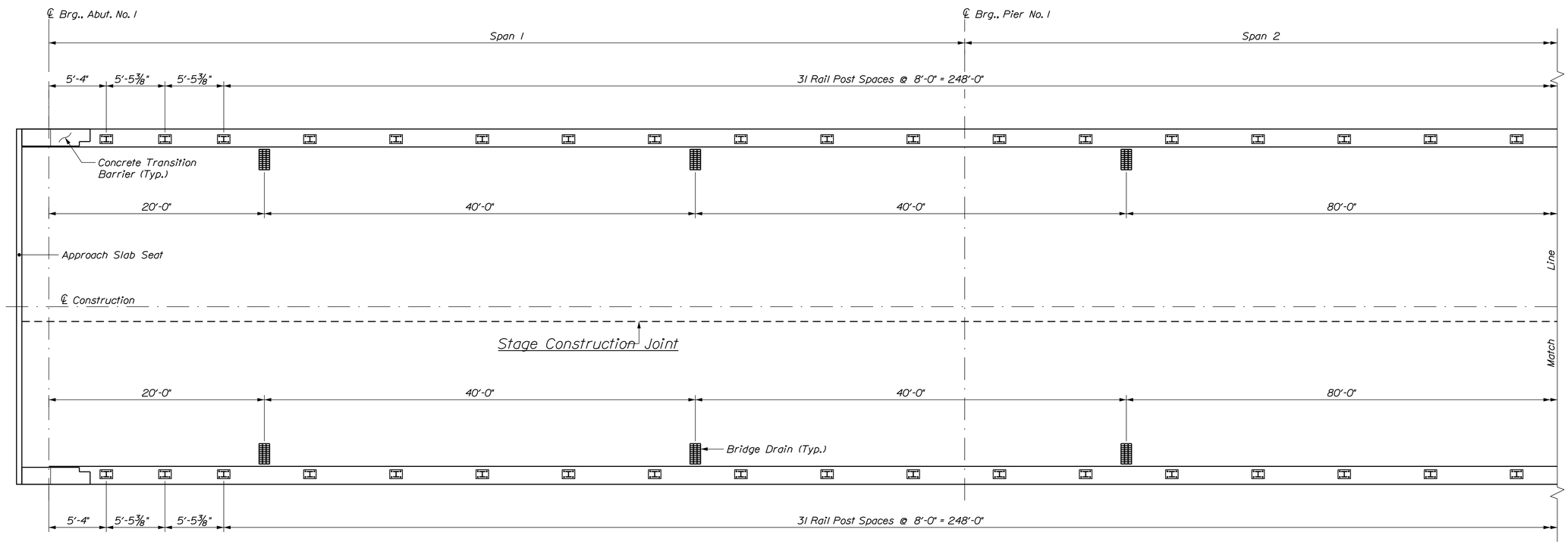

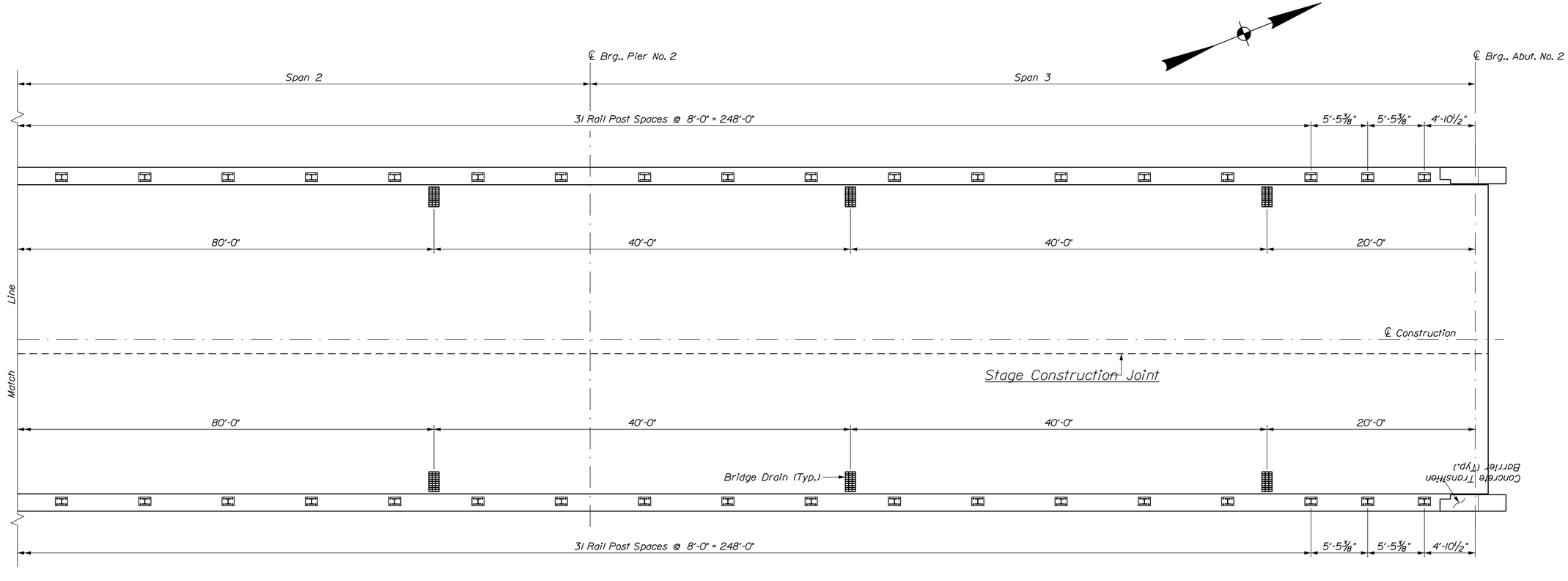

STATE OF MAINE
DEPARTMENT OF TRANSPORTATION

STP-2050(900)

WIN 20509.00

BRIDGE NO. 5823

BRIDGE PLANS

PROJ. MANAGER	M. WIGHT		
DESIGN-DETAILED	T. HUELM	BY	DATE
CHECKED-REVIEWED	B. REEVES	LIBBY/MRP Team North	MAR 2016 APRIL 2016
DESIGN2-DETAILED2			
DESIGN3-DETAILED3			
REVISIONS 1			
REVISIONS 2			
REVISIONS 3			
REVISIONS 4			
FIELD CHANGES			

SIGNATURE

P.E. NUMBER

DATE

HAYNESVILLE BRIDGE
MATTAWAMKEAG RIVER
HAYNESVILLE AROOSTOOK COUNTY

SUPERSTRUCTURE PLANS

SHEET NUMBER

29

OF 34

Filename: ...\MSTA\029_Superstructure.dgn Division: BRIDGE Username: david.sullivan Date:4/15/2016

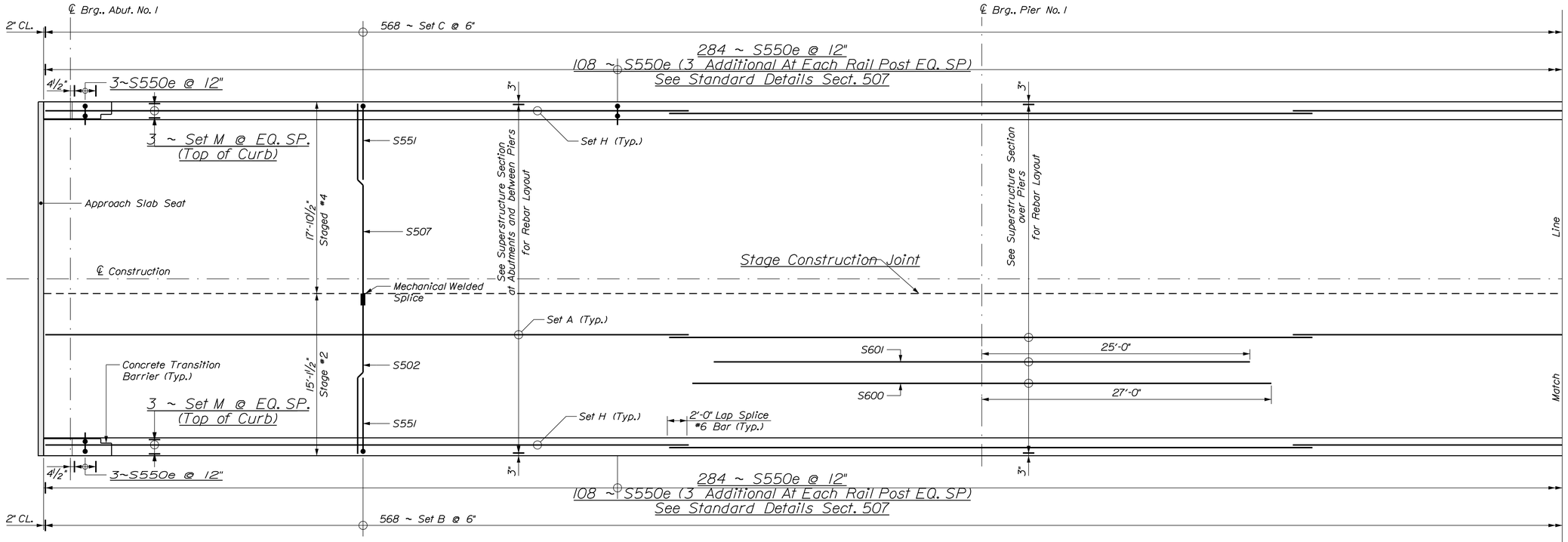

SET "A"
4 ~ S500 & 1 ~ S501

SET "B"
1 ~ S502 & 1 ~ S551 (Top)
1 ~ S502 (Bottom)
2 ~ Mechanical Coupler

Note:
Rebar S502 With Mechanical Coupler Will Have To Be Field Cut To Length.

SET "C"
1 ~ S507 & 1 ~ S551 (Top)
1 ~ S507 (Bottom)

SET "H"
4 ~ S608 & 1 ~ S609 (Bottom)

SET "M"
4 ~ S500e & 1 ~ S501e
e = Expoxy Coated Rebar

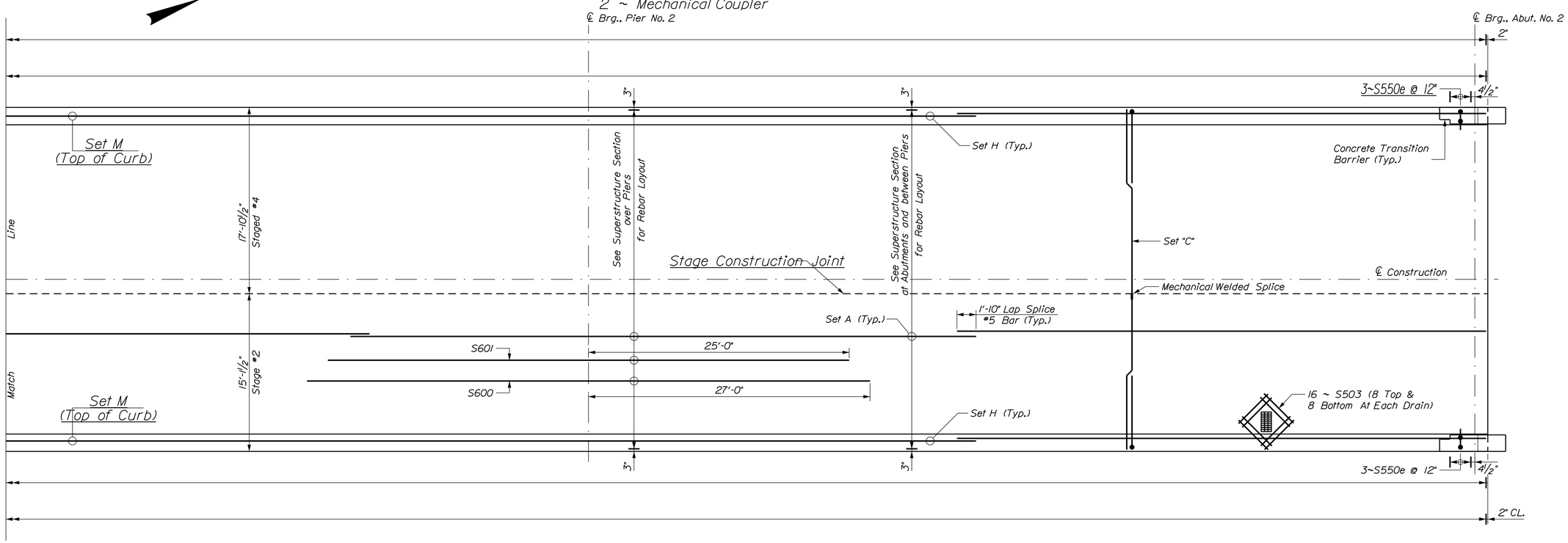

STATE OF MAINE
DEPARTMENT OF TRANSPORTATION

STP-2050(900)

WIN 20509.00

BRIDGE NO. 5623

BRIDGE PLANS

PROJ. MANAGER	M. WIGHT	BY	DATE
DESIGN-DETAILED	T. HJELM	LIBBY/MRP	MAR 2016
CHECKED-REVIEWED	B. REEVES	Team North	APRIL 2016
DESIGN2-DETAILED2			
DESIGN3-DETAILED3			
REVISIONS 1			
REVISIONS 2			
REVISIONS 3			
REVISIONS 4			
FIELD CHANGES			

SIGNATURE

P.E. NUMBER

DATE

HAYNESVILLE BRIDGE
MATTAWAMKEAG RIVER
HAYNESVILLE AROOSTOOK COUNTY

SUPERSTRUCTURE
REINFORCING PLAN

SHEET NUMBER
30
OF 34

Filename: ...\030_Superstructure_Reinforcing.dgn Division: BRIDGE Username: david.sullivan Date:4/15/2016

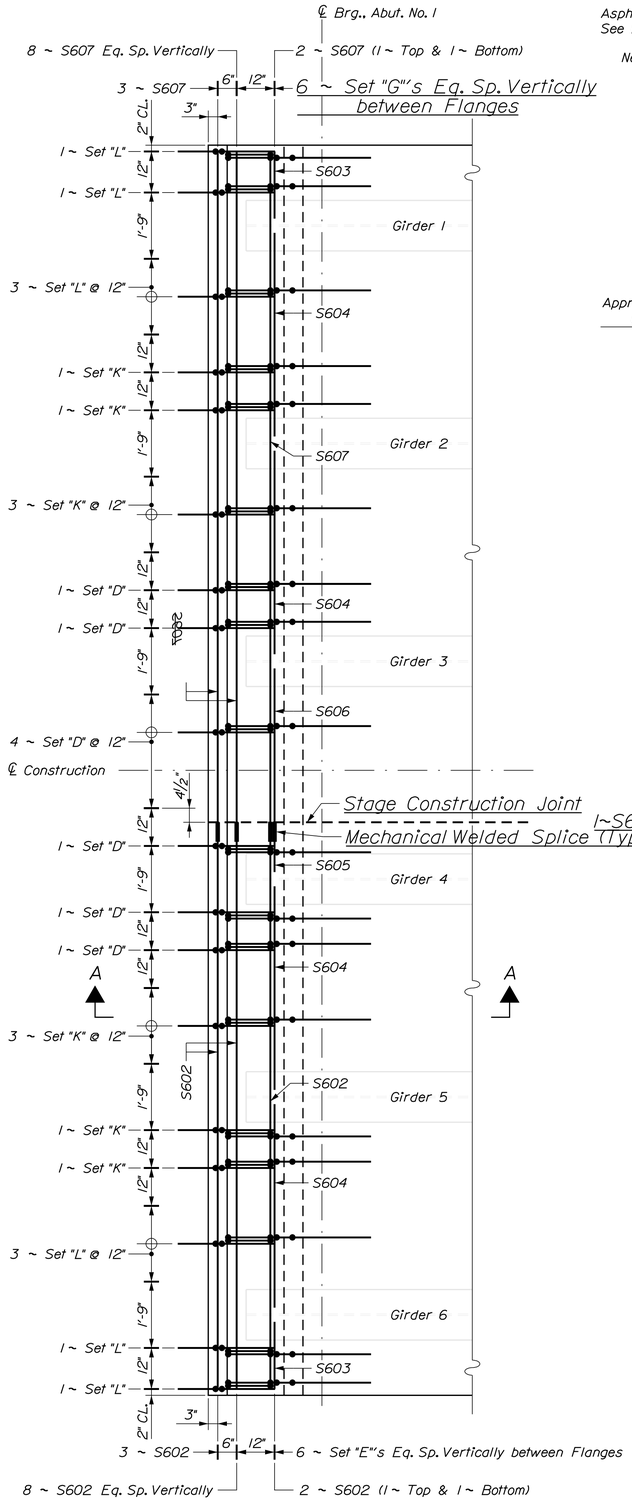

END OF SUPERSTRUCTURE OVER ABUTMENT NO. 1

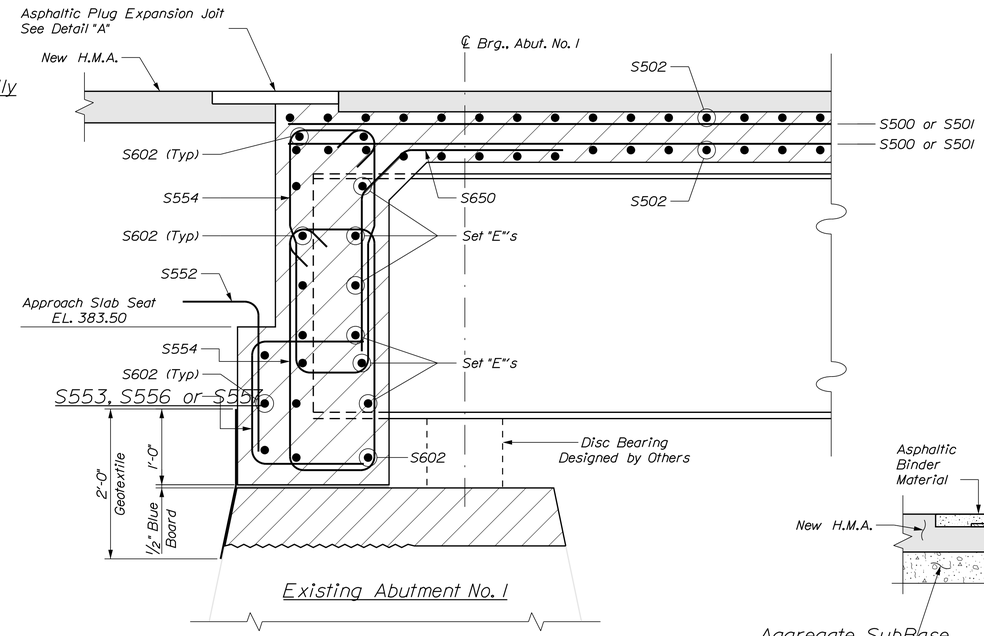

SUPERSTRUCTURE SECTION OVER ABUTMENT NO. 1

Abutment rebar not shown for clarity

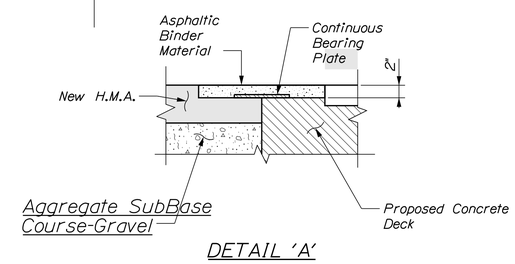

DETAIL 'A'

SET "D"
1~S552, 1~S553, 2~S554 & 1~S650

SET "E"
1~S603, 2~S604 & 1~S605 w/MC

SET "F"
1~S504, 2~S505 & 1~S506 w/MC

SET "G"
1~S603, 2~S604 & 1~S605

SET "J"
1~S504, 2~S505 & 1~S508

SET "K"
1~S552, 1~S556, 2~S554 1~S650

SET "L"
1~S552, 1~S557, 2~S554 1~S650

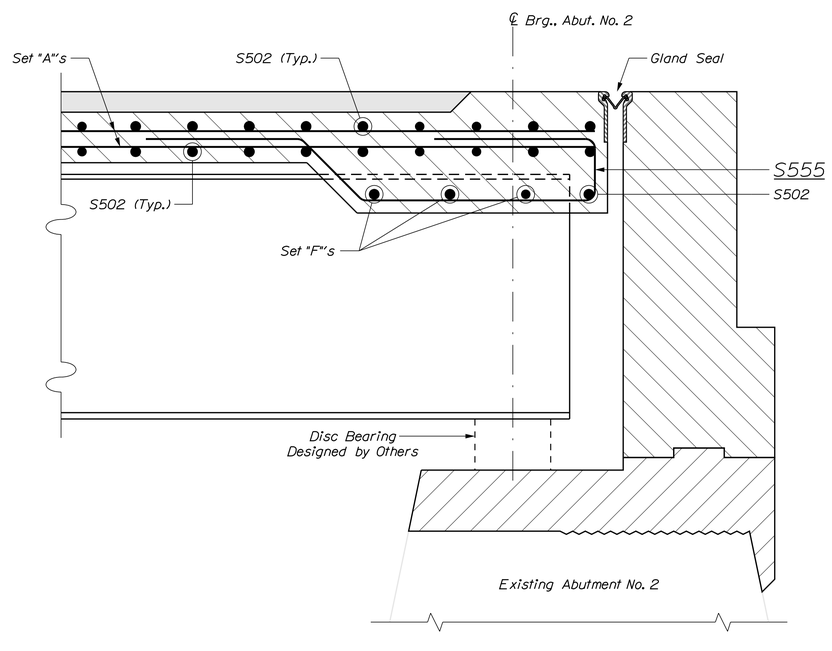

SUPERSTRUCTURE SECTION OVER ABUTMENT NO. 2

Abutment rebar not shown for clarity

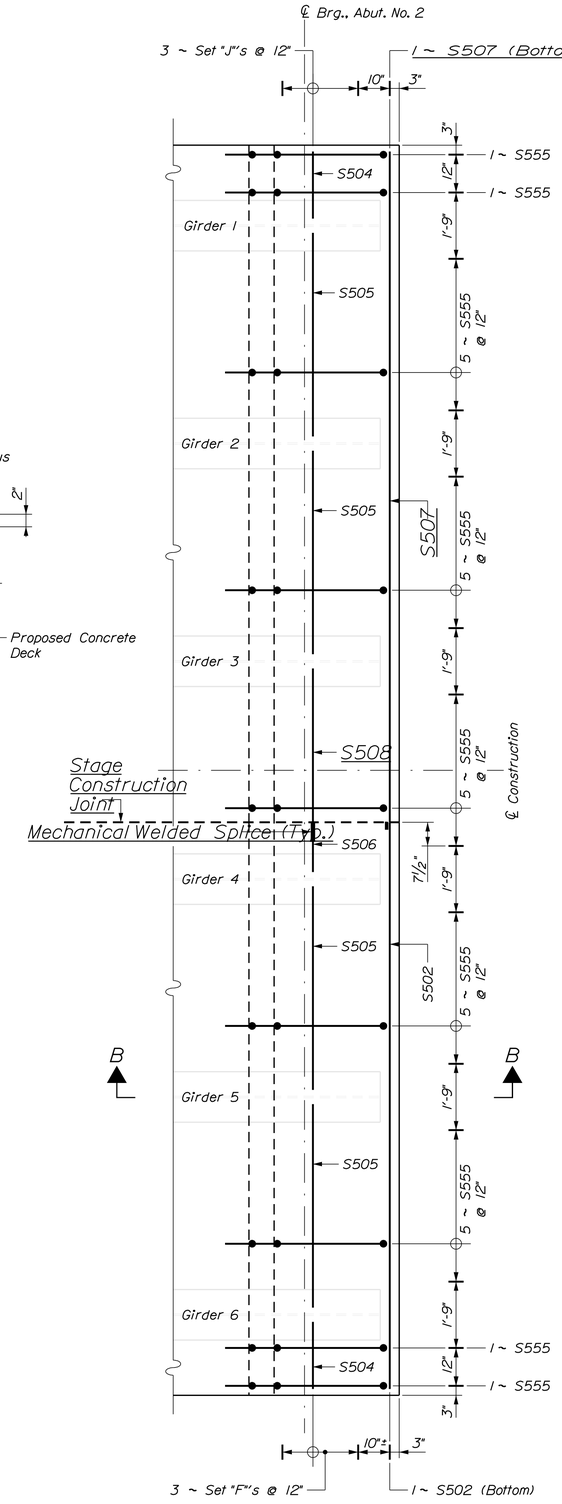

END OF SUPERSTRUCTURE OVER ABUTMENT NO. 2

STATE OF MAINE
DEPARTMENT OF TRANSPORTATION

STP-2050(900)

WIN 20509.00

BRIDGE NO. 5823

BRIDGE PLANS

		BY	DATE
PROJ. MANAGER	M. WIGHT		
DESIGN-DETAILED	T. HJELM	LIBBY/MRP	MAR 2016
CHECKED-REVIEWED	B. REEVES	Team North	APRIL 2016
DESIGN2-DETAILED2			
DESIGN3-DETAILED3			
REVISIONS 1			
REVISIONS 2			
REVISIONS 3			
REVISIONS 4			
FIELD CHANGES			

SIGNATURE

P.E. NUMBER

DATE

HAYNESVILLE BRIDGE
MATTAWAMKEAG RIVER
HAYNESVILLE AROOSTOOK COUNTY

SUPERSTRUCTURE DETAILS

SHEET NUMBER

31

OF 34

Filename: ...\031_Superstructure_Rein_Ends.dgn Division: BRIDGE Username: david.sullivan Date:4/15/2016

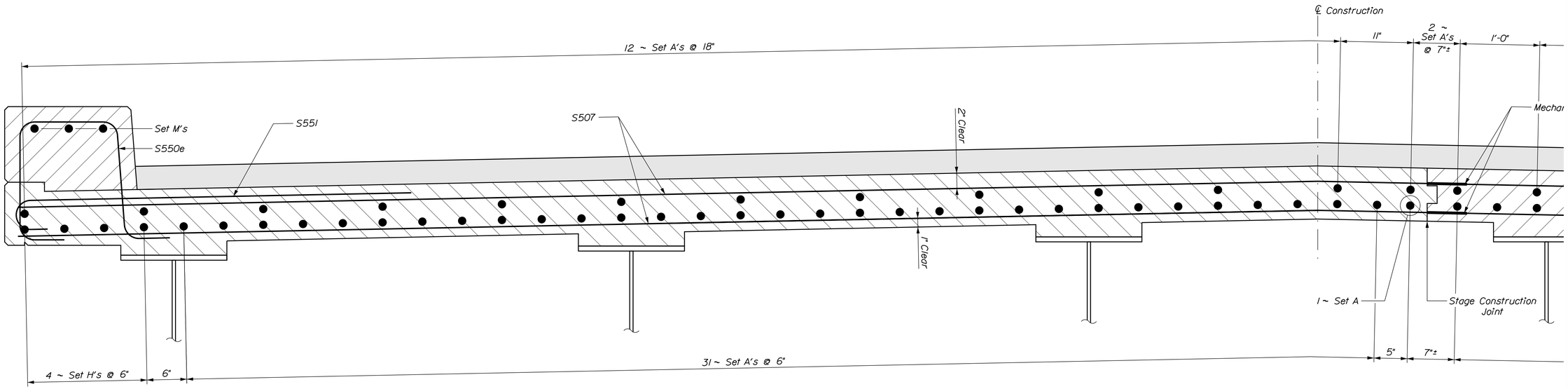

BRIDGE TRANSVERSE SECTION
At Abutments and between Piers

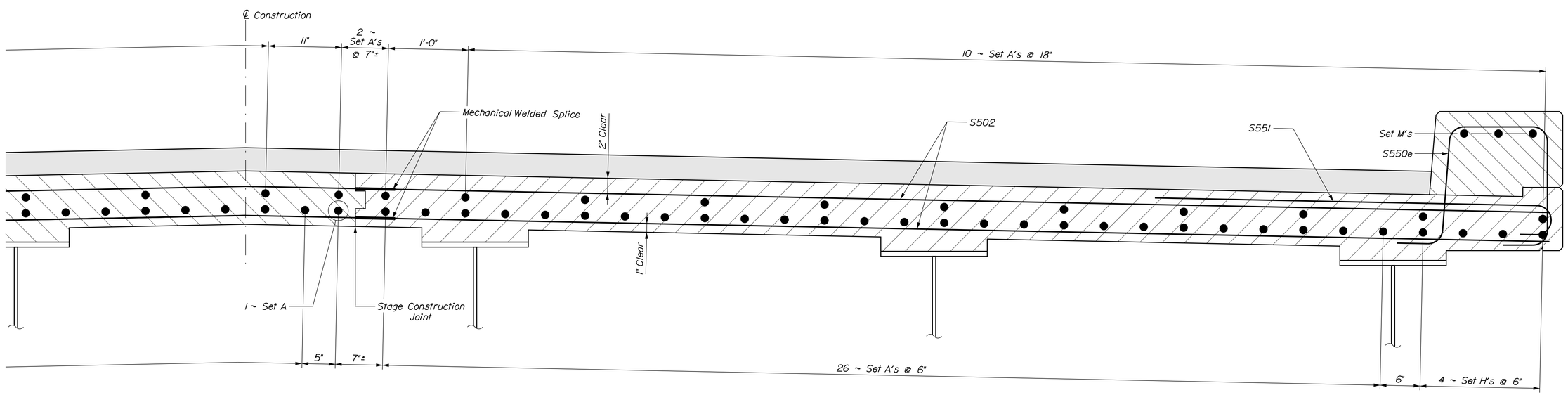

BRIDGE TRANSVERSE SECTION
At Abutments and between Piers

STATE OF MAINE
DEPARTMENT OF TRANSPORTATION

STP-2050(900)

WIN 20509.00

BRIDGE NO. 5623

BRIDGE PLANS

PROJ. MANAGER	M. WIGHT	BY	DATE
DESIGN-DETAILED	T. HUELM	LIBBY\MRP	MAR 2016
CHECKED-REVIEWED	B. REEVES	Team North	APRIL 2016
DESIGN2-DETAILED2	------	------	------
DESIGN3-DETAILED3	------	------	------
REVISIONS 1	------	------	------
REVISIONS 2	------	------	------
REVISIONS 3	------	------	------
REVISIONS 4	------	------	------
FIELD CHANGES	------	------	------

SIGNATURE

P.E. NUMBER

DATE

HAYNESVILLE BRIDGE
MATTAWAMKEAG RIVER
HAYNESVILLE AROOSTOOK COUNTY

SUPERSTRUCTURE SECTION AT ABUTMENTS AND BETWEEN PIERS

SHEET NUMBER
32
OF 34

Filename: ...\032_Superstructure_Reinforcement_sections.dgn Date:4/15/2016
Username: david.sullivan

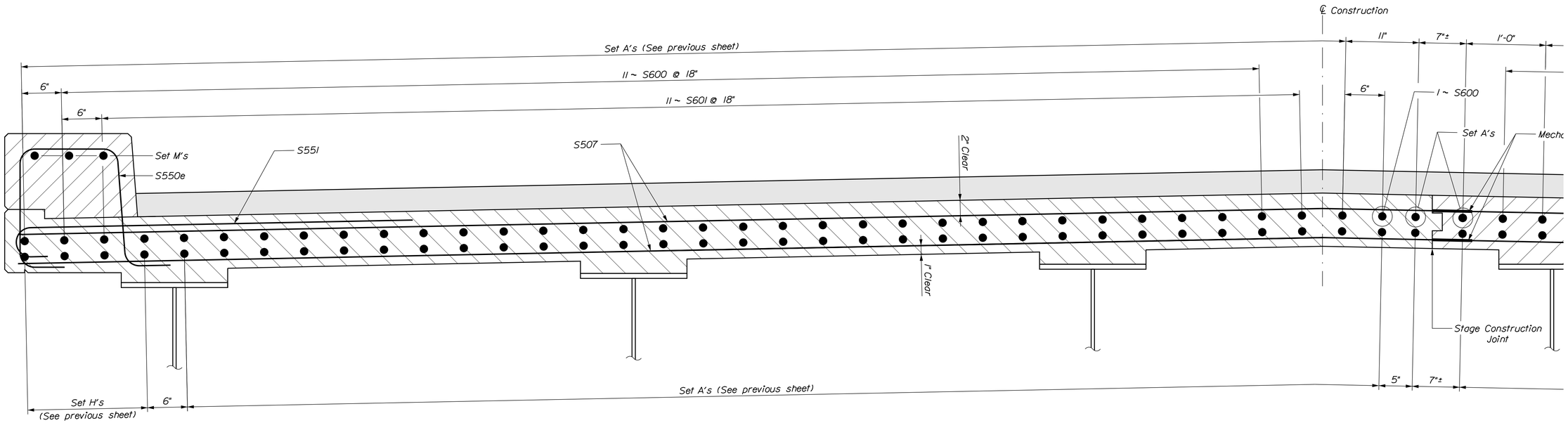

BRIDGE TRANSVERSE SECTION
Over Pier No. 1 & 2

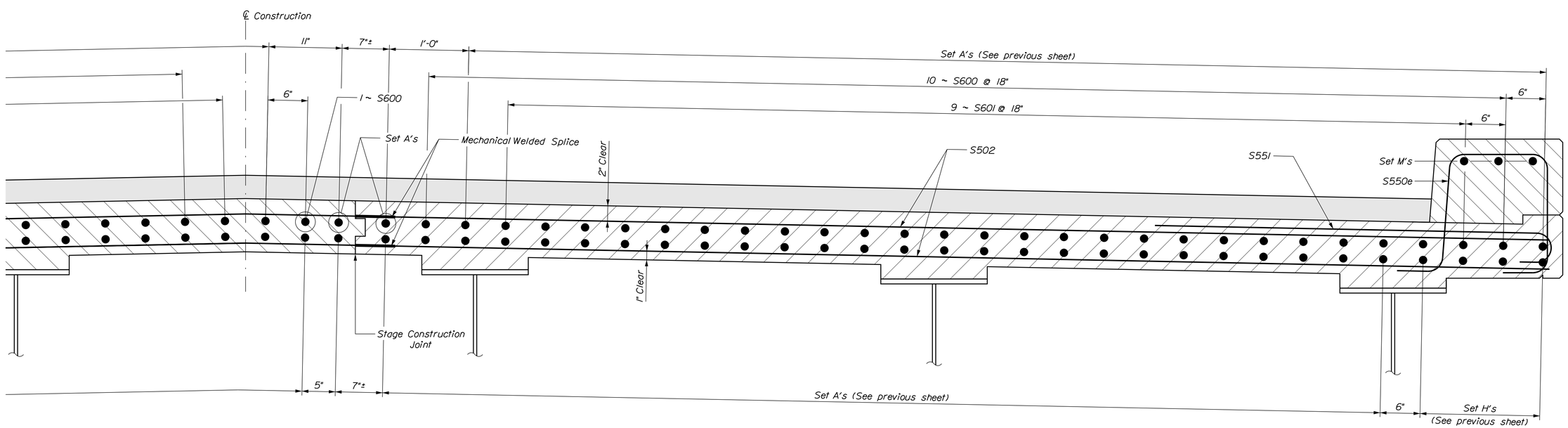

BRIDGE TRANSVERSE SECTION
Over Pier No. 1 & 2

STATE OF MAINE
DEPARTMENT OF TRANSPORTATION

STP-2050(900)

WIN 20509.00

BRIDGE NO. 5623

BRIDGE PLANS

PROJ. MANAGER	M. WIGHT	BY	DATE	
DESIGN-DETAILED	T. HUELM	LIBBY\MRP	MAR 2016	SIGNATURE
CHECKED-REVIEWED	B. REEVES	Team North	APRIL 2016	
DESIGN2-DETAILED2	------	------	------	P.E. NUMBER
DESIGN3-DETAILED3	------	------	------	
REVISIONS 1	------	------	------	DATE
REVISIONS 2	------	------	------	
REVISIONS 3	------	------	------	
REVISIONS 4	------	------	------	
FIELD CHANGES	------	------	------	

HAYNESVILLE BRIDGE
MATTAWAMKEAG RIVER
HAYNESVILLE AROOSTOOK COUNTY

SUPERSTRUCTURE SECTION
OVER PIERS

SHEET NUMBER
33
OF 34

Filename: ...\033_Superstructure_Reinforcement_sections.dgn
Username: david.sullivan
Date:4/15/2016

STRAIGHT BARS

MARK	QTY.	LENGTH	LOCATION
Abutment No. 1 - Plain Bar			
A500	10	5'-4"	Top of Abutment
A501	10	6'-0"	Top of Abutment
A502	5	4'-2"	Top of Abutment
A503	5	7'-2"	Top of Abutment
Superstructure - Plain Bar			
S500	328	60'-0"	Superstructure
S501	82	50'-9"	Superstructure
S502	1,137	14'-11"	Superstructure
S503	192	4'-0"	Around Bridge Drains
S504	6	1'-9"	End Superstructure
S505	12	5'-4 1/2"	End Superstructure
S506	3	1'-4"	End Superstructure
S507	1,137	17'-8"	End Superstructure
S508	3	4'-3 1/2"	End Superstructure
S600	44	54'-0"	Superstructure over Pier
S601	40	50'-0"	Superstructure over Pier
S602	13	14'-11"	Superstructure
S603	12	1'-9"	End Superstructure
S604	24	5'-4 1/2"	End Superstructure
S605	6	1'-4"	End Superstructure
S606	6	4'-3 1/2"	End Superstructure
S607	13	17'-8"	Superstructure
S608	32	60'-0"	Superstructure Fascia (Bottom)
S609	8	50'-9"	Superstructure Fascia (Bottom)
Superstructure - Epoxy Coated Bar			
S500e	24	60'-0"	Superstructure Curb
S501e	6	50'-9"	Superstructure Curb
Approach Slabs - Plain Bar			
AS500	32	15'-2"	Approach Slab
AS501	32	12'-5"	Approach Slab
AS600	114	15'-0"	Approach Slab

MARK	QTY.	LENGTH	LOCATION
Abutment No. 2 - Plain Bar			
B500	20	6'-0"	Abutment Bridge Seat
B501	5	4'-2"	Abutment Bridge Seat
B502	8	14'-7 1/2"	Abutment Backwall
B503	8	17'-10"	Abutment Backwall
B504	5	7'-2"	Abutment Bridge Seat

BENT BARS

MARK	QTY.	LENGTH	TYPE	A	B	C	D	E	F	G	H	O	R	LOCATION
Abutment No. 1 - Plain Bar														
A550	24	5'-6"	L	3'-7"	1'-11"									Top Abutment
A551	20	5'-4 1/2"	L	3'-7"	1'-9 1/2"									Top Abutment
A552	20	5'-3"	L	3'-7"	1'-8"									Top Abutment
Abutment No. 2 - Plain Bar														
B550	24	8'-0"	L	6'-11"	1'-1"									Abutment Backwall
B551	20	7'-10 1/2"	L	6'-9 1/2"	1'-1"									Abutment Backwall
B552	16	7'-9"	L	6'-8"	1'-1"									Abutment Backwall
B554	12	6'-3"	L	4'-4"	1'-11"									Abutment Bridge Seat
B555	10	6'-11 1/2"	L	4'-4"	1'-9 1/2"									Abutment Bridge Seat
B556	12	6'-0"	L	4'-4"	1'-8"									Abutment Bridge Seat
B557	28	8'-7"	H	5 1/2"	1'-7"	2'-3"	1'-7"	2'-3"		5 1/2"				Backwall/Under Approach Slab Seat
Superstructure - Plain Bar														
S551	1,136	5'-7"	C	7"	5'-0"									Superstructure/Approach Slab Seat
S552	29	3'-0"	L	2'-0"	1'-0"									Superstructure/Approach Slab Seat
S553	9	4'-10 1/2"	U	1'-7"	1'-8 1/2"	1'-7"								Superstructure/Approach Slab Seat
S554	58	9'-7"	H	5 1/2"	1'-1"	3'-3"	1'-1"	3'-3"		5 1/2"				End Superstructure
S555	29	8'-9"	SJ	2'-0"	10 1/2"	2'-11"	11 1/2"	2'-0"						End Superstructure
S556	10	4'-9"	U	1'-7"	1'-7"	1'-7"								Superstructure/Approach Slab Seat
S557	10	4'-7 1/2"	U	1'-7"	1'-5 1/2"	1'-7"								Superstructure/Approach Slab Seat
S650	29	4'-10"	DC	2'-0"	10"	2'-0"								End Superstructure over Abut. No. 1
Abutment No. 2 - Epoxy Coated Bar														
B553e	8	8'-5"	L	7'-4"	1'-1"									Abutment Backwall/Curb
B558e	4	5'-0"	U	2'-0"	1'-0"	2'-0"								Curb
Superstructure - Epoxy Coated Bar														
S550e	796	5'-9"	SC	10"	1'-5"	1'-3"	1'-5"			10"		1'-3 1/2"		Superstructure Curb

TYPE - BENDING DIAGRAMS

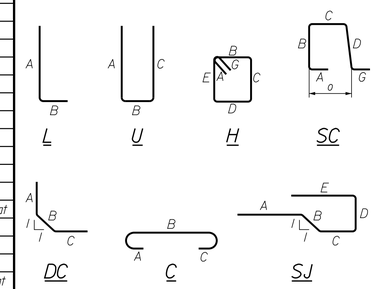

The lower case letter 'e' in bar designations represent bars that are epoxy coated.

All dimensions are out-to-out of bar.

Bending details and hooks shall conform to the recommendations of the current revision of ACI Standard 315 and ACI Standard 318.

Reinforcing Bar: ASTM A615/A615M, Grade 60

GENERAL NOTES

1. The first two digits following the letter(s) of the mark indicate the size ofthe bar:

   Mark "A502" = bar size #5
   Mark "P805" = bar size #8
   Mark "S650" = bar size #6

2. Each crank bar, Type B, may be replaced by two (2) straight bars (one top and one bottom) of the same bar size as the crank bar. Payment in either case shall be based on crank bars as schedule on the plans.

STATE OF MAINE
DEPARTMENT OF TRANSPORTATION

STP-2050(900)

WIN 20509.00

BRIDGE NO. 5623

BRIDGE PLANS

PROJ. MANAGER	M. WIGHT	BY	DATE
DESIGN-DETAILED	T. HJELM	LIBBY\MRP	MAR 2016
CHECKED-REVIEWED	B. REEVES	Team North	APRIL 2016
DESIGN2-DETAILED2			
DESIGN3-DETAILED3			
REVISIONS 1			
REVISIONS 2			
REVISIONS 3			
REVISIONS 4			
FIELD CHANGES			

SIGNATURE

P.E. NUMBER

DATE

HAYNESVILLE BRIDGE
MATTAWAMKEAG RIVER
HAYNESVILLE AROOSTOOK COUNTY

REINFORCING STEEL SCHEDULE

SHEET NUMBER

34

OF 34

Filename: ...\00\BRIDGE\MSTA\034_Rebar.dgn Division: BRIDGE Username: david.sullivan Date:4/15/2016