STATE OF MAINE
DEPARTMENT OF TRANSPORTATION
16 STATE HOUSE STATION
AUGUSTA, MAINE 04333-0016

Paul R. LePage
GOVERNOR

David Bernhardt
COMMISSIONER

May 3, 2016
Subject: Bridge Replacement
State WIN: 020509.00
Location: **Haynesville**
Amendment No. 1

Dear Sir/Ms:

The Contract shall consider the following changes to the Bid Documents:

In the Bid Book (page 55) **REMOVE** "SPECIAL PROVISION, SECTION 107 TIME (Limitations of Operations, Contract Time, Supplemental Liquidated Damages) and **REPLACE** with the attached new SPECIAL PROVISION, SECTION107 TIME (Limitations of Operations, Contract Time, Supplemental Liquidated Damages) 1 page, dated May 2, 2016.

In the Plan Set:

The following sheet is to be REMOVED from the existing plan set and then REPLACED with the corresponding attached revised sheet:

REMOVE sheet	and **REPLACE** with sheet
21	21 (with revision 1 dated April 26, 2016)

Make the following change on sheet 2 of the plans:
The correct underlying quantity for item 504.702 is 323,000 lbs. The correct underlying quantity for item 504.702 is 323,000 lbs. Please make these changes using pen and ink.

The following questions have been received:

Question: Contract Drawing 2 of 34 under Pay Item 504.702 lists 32,300 lbs. - This weight is incorrect. Please supply the corrected weight for this Pay Item which will also affect 504.71 for the Structural Steel Erection.

Response: The correct underlying quantity for item 504.702 Structural Steel, Fabrication and Delivery, Welded is 323,000 lbs. The correct underlying quantity for item 504.71 Structural Steel Erection is 323,000 lbs. Please make these changes using pen and ink.

Question: Are all 6 girder lines to be replaced?

Response: The existing bridge has 5 girders lines. All of the existing superstructure including the existing 5 girder lines are being removed. The proposed new bridge has 6 girder lines.

Question: Shouldn't the estimated quantity of structural steel shown on p. 2 for item 504.702 and 504.71 be +/- 320,000# rather than 32,300#?

Response: See response above.

Question: No fabricator can provide structural steel to meet the schedule requirements. Steel for phase 1 would require delivery in July of 2016. We might be able to get steel for phase 1 in October or November.

Response: Please refer to the new SPECIAL PROVISION, SECTION107 TIME (Limitations of Operations, Contract Time, Supplemental Liquidated Damages) 1 page, dated May 2, 2016.

Consider this change and information prior to submitting your bid on **May 11, 2016**.

Sincerely,

George M. A. Macdougall P.E.
Contracts & Specifications Engineer

SPECIAL PROVISION
SECTION 107
PROSECUTION AND PROGRESS
(Limitations of Operations)
(Contract Time)
(Supplemental Liquidated Damages)

1. Work shall not begin on the project until April 1, 2017.

2. The Contractor shall plan the work such that the new bridge and approaches will be open to two-way traffic on or before November 15, 2017. Open to traffic is defined as the bridge having base pavement in place, temporary pavement around the bridge drains and bridge rail installed and accepted and the approaches having base pavement and approach guardrail installed and accepted. The Contractor will be assessed supplemental liquidated damages at the rate of Five Hundred Dollars ($500.00) per day for every calendar day the bridge is not open to two way traffic after November 15, 2017.

3. Removal of the existing beams, installation of new beams and placement of precast deck panel over the active traffic lane shall be done at night between 11 pm and 5 am. Between 11 pm and 2 am the road can be closed to traffic for a maximum duration of 30 minutes. Between 2 am and 5 am the road can be closed to traffic for a maximum duration of 20 minutes. Traffic shall be allowed to fully clear between road closures. The Contractor shall provide the Resident with a minimum of 72 hours advance notice of any night work.

   Before any short term night time road closure(s) take place, the Contractor shall contact the following entities immediately before the road closure:

   Aroostook County Sheriff 207-532-3471
   (Note: Dispatches fire department in Haynesville)

   State Police Houlton 532-5400 (Troop F)

   Washington County Regional Communication Center 207-255-6871
   (Note: Dispatches ambulance service for Haynesville)

   Nightime road closure shall not start if emergency services have been dispatched.

4. Assessment of supplemental liquidated damages will be in addition to liquidated damages specified in Section 107 of the Standard Specifications.

5. The Contract Completion Date for this contract is July 15, 2018.

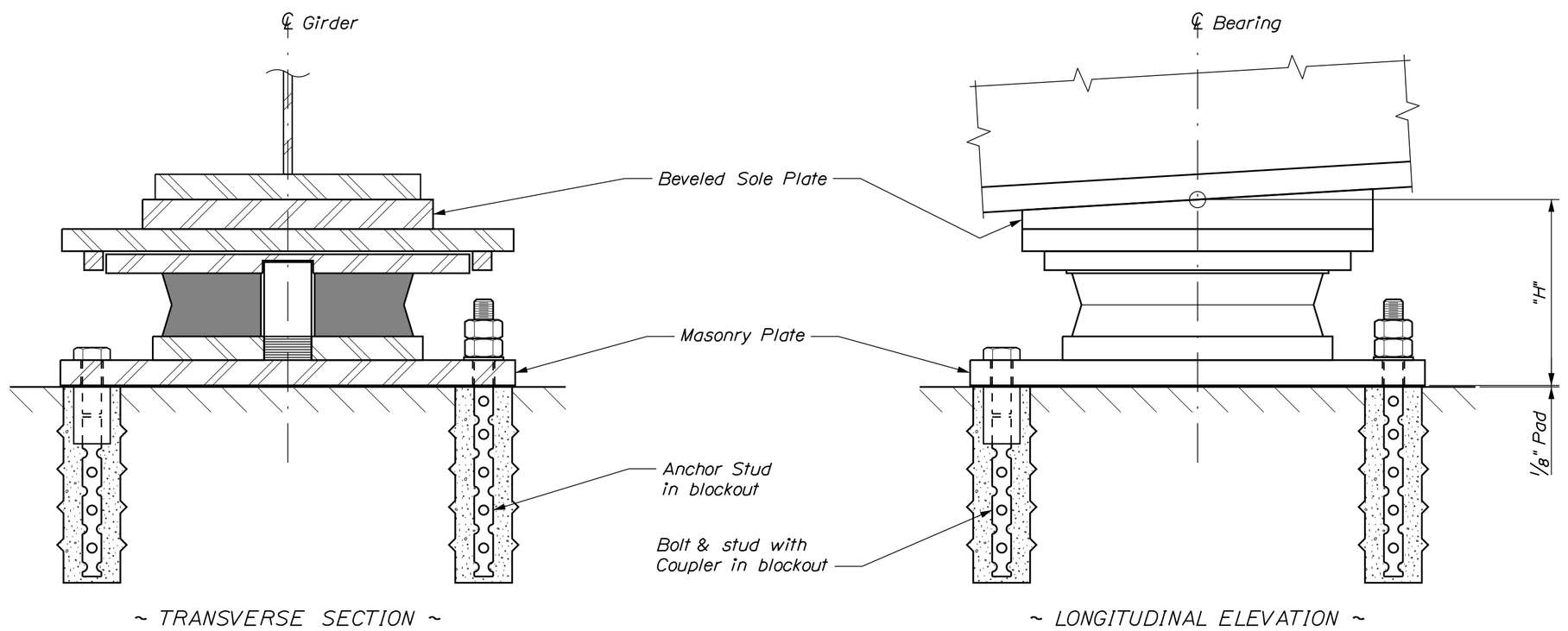

EXPANSION BEARING

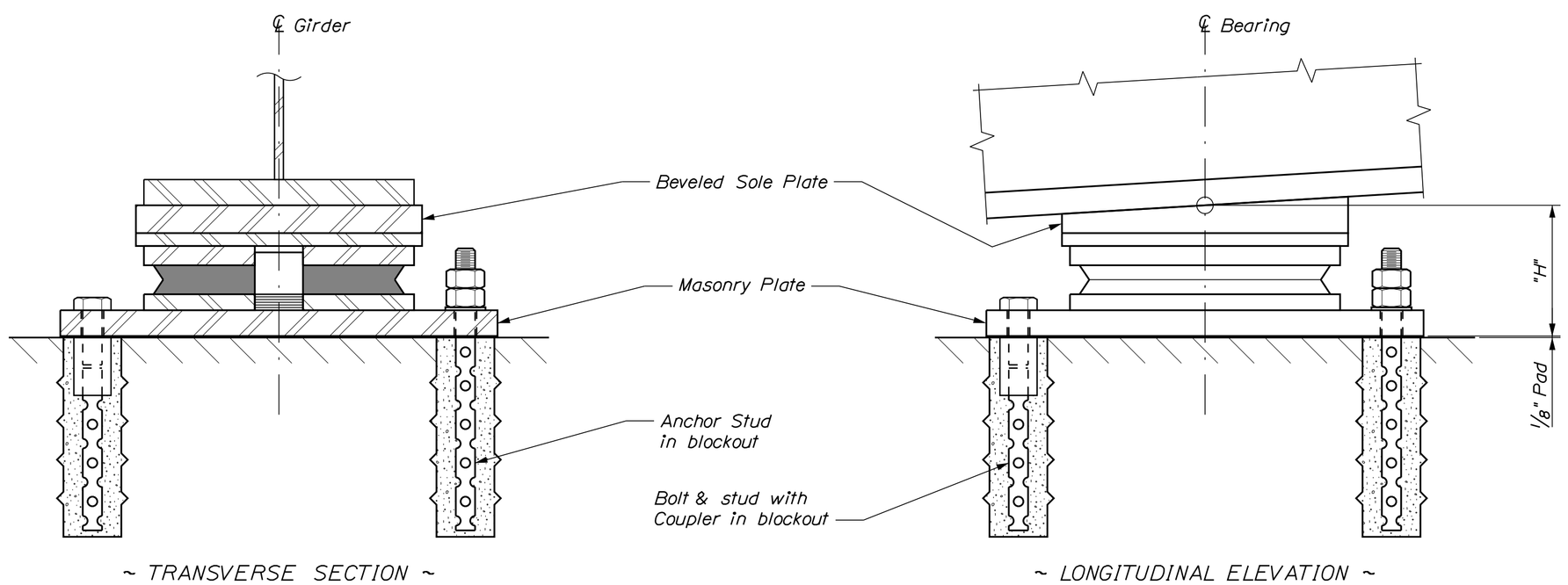

FIXED BEARING

DISC BEARING NOTES

1. The actual dimension "H" shall be the responsibility of the Contractor. Dimensions and sizes of plates not shown are dependent on design loads, capacity and the manufacturer of the bearings. The shop drawings, prepared by the manufacturer, shall provide all pertinent bearing information. The final bearing pedestal elevations shall be determined by the Contractor and submitted with the shop drawings for approval prior to construction of the substructure units.

2. Masonry plates shall be placed on 1/8" thick preformed pads in accordance with the specifications.

3. All steel, unless otherwise specified, shall meet the requirements of ASTM A709, Grade 50W.

4. Bearing anchorage shall be either Anchor Stud with double nuts and washers in blockout, or Bolt & Stud with Coupler in blockout, at the Contractor's option.

5. Anchorage spacing shall be coordinated with the bearing manufacturer.

6. Anchor bolts shall meet the requirements of ASTM A325, Type 1.

7. Anchor rods shall meet the requirements of ASTM F1554, Grade 105 and shall be swedged on the embedded portion of the rod.

8. Heavy hex nuts for anchor rods shall meet the requirements of ASTM A563, Grade D or DH.

9. Anchor bolts, rods, washers and nuts shall be galvanized to ASTM A153 or ASTM B695, Class 50, Type 1. Payment for galvanizing will be considered incidental to the disc bearing pay items.

10. For abutment bearings, all steel located below the polyether urethane disc shall be coated in accordance with Standard Specifications, Section 506, Protective Coating - Steel (Thermal Spray Coating). All remaining steel shall be coated in accordance with Standard Specifications, Section 506, Protective Coating - Steel (Zinc Rich Coating System). Payment for Coatings for Disc Bearings will be considered incidental to Item 523.5551, Pot or Disc Bearings, Fixed, or Item 523.5552, Pot or Disc Bearings, Expansion as applicable.

11. For pier bearings, all steel located below the polyether urethane disc shall be coated in accordance with Standard Specifications, Section 506, Protective Coating - Steel (Thermal Spray Coating). All remaining steel shall remain uncoated. Payment for Coatings for Disc Bearings will be considered incidental to Item 523.5551, Pot or Disc Bearings, Fixed, or Item 523.5552, Pot or Disc Bearings, Expansion as applicable.

12. The abbreviation "PTFE" indicates polytetraflouroethylene.

13. All PTFE, including guide and restraint surfaces, shall be unfilled.

14. PTFE minimum bearing pressure shall be 1 ksi under total service loading and 3 ksi under total strength loading.

15. Average compressive stresses on the disc shall be computed using the minimum plan area of the unstressed disc, excluding the area of any holes.

16. The design temperature range shall be 125°F (-20°F to 105°F).

17. Design of the sole plates and masonry plates is the responsibility of the Bearing Manufacturer. Payment for these shall be made under Item 523.5551, Pot or Disc Bearings, Fixed or Item 523.5552, Pot or Disc Bearings, Expansion as applicable.

18. Sole plate shall be beveled according to the grade defined at each substructure location in the Disc Bearing Design Table.

19. Strength Limit State rotations shown in the Disc Bearing Design Table do not include an allowance for uncertainties of 0.005 radians, as defined in AASHTO LRFD Bridge Design Specifications, 6th Edition 2012.

20. Bearings shall be designed with a thermal load factor of 1.0.

21. Longitudinal horizontal forces do not include friction forces at expansion bearings.

22. All bearings shall be marked prior to shipping. The marks shall include the bearing location on the bridge, and a direction arrow that points upstation. All marks shall be permanent and shall be visible after the bearing is installed.

23. Bearing installation shall be in strict conformance with the Standard Specifications and the manufacturer's recommendations.

24. In the Disc Bearing Setting Corrections Table, a negative dimension indicates a direction away from the nearer expansion joint. A positive dimension indicates a direction toward the nearer expansion joint.

25. Temperatures shown in the Disc Bearing Setting Corrections Table are those of the steel girders and not necessarily the ambient air temperature.

26. Pier No. 1 bearings shall be welded to the girder prior to welding of any other bearings. Bearing stiffeners at Pier No. 2 shall be within 1/2 inch of the centerline of bearing at the time of welding.

1

DISC BEARING DESIGN TABLE

Location	Bearing Type	Design Loads Per Bearing (kips)										Dim. "H" (in.) (Note No. 1)	Design Rotation (Note No. 19)		Total Long. Movement (in.)	Sole Plate Bevel
		Vertical				Horizontal										
		Strength	Extreme Event	Service		Strength		Extreme Event		Service			Service			
		Total Load	Total Load	Dead Load	Total Load	Longitudinal (Note No. 21)	Transverse	Longitudinal (Note No. 21)	Transverse	Longitudinal (Note No. 21)	Transverse		Rotation (radians)	Coincident Total Load (kips)		
Abut. No. 1	Uni-Directional	189	69	35	123	--	10	--	54	--	5		.0108	103	13/16	0.687
Pier No. 1	Fixed	270	112	64	194	60	21	55	84	45	10		.0086	160	--	0.273
Pier No. 2	Uni-Directional	270	112	64	194	--	21	--	84	--	10		.0086	160	1 1/16	0.273
Abut. No. 2	Uni-Directional	189	69	35	123	--	10	--	54	--	5		.0108	103	1 7/8	0.687

1

DISC BEARING SETTING CORRECTIONS TABLE

	Dimension "X" (Inches)					
	15 °F	30 °F	45 °F	60 °F	75 °F	90 °F
Abut. No. 1	3/16	1/8	0	1/8	3/16	5/16
Pier No. 1	--	--	--	--	--	--
Pier No. 2	-1/4	-1/8	0	1/8	1/4	3/8
Abut. No. 2	-7/16	-1/4	0	1/4	7/16	11/16

STATE OF MAINE
DEPARTMENT OF TRANSPORTATION

STP-2050(900)

WIN 20509.00

BRIDGE NO. 5823

BRIDGE PLANS

PROJ. MANAGER	M. WIGHT	BY	DATE
DESIGN-DETAILED	T. HJELM	LIBBY\MRP	MAR 2016
CHECKED-REVIEWED	B. REEVES	Team North	APRIL 2016
DESIGN2-DETAILED2			
DESIGN3-DETAILED3			
REVISIONS 1 △1	Disc Bearing Design Table 4/26/2016 & Setting Table Changes		
REVISIONS 2			
REVISIONS 3			
FIELD CHANGES			

SIGNATURE

P.E. NUMBER

DATE

HAYNESVILLE BRIDGE
MATTAWAMKEAG RIVER
HAYNESVILLE AROOSTOOK COUNTY

DISC BEARINGS

SHEET NUMBER

21

OF 34

Filename: ...\MSTA\021_Disc_Bearings.dgn Division: BRIDGE Username: mark.poulin Date:4/26/2016