STATE OF MAINE
DEPARTMENT OF TRANSPORTATION

MEDDYBEMPS
WASHINGTON COUNTY
MEDDYBEMPS BRIDGE
OVER
DENNY'S RIVER
ROUTE 191
FEDERAL AID PROJECT NO. STP-2050(600)
PROJECT LENGTH 0.114 mi.
BRIDGE NO. 3736

SPECIFICATIONS

Design: Load and Resistance Factor Design per AASHTO LRFD Bridge Design Specifications, Seventh Edition 2014 with 2015 Interim Revisions.

DESIGN LOADING

Live Load ..... HL - 93 Modified

TRAFFIC DATA

Current (2013) AADT	930
Future (2033) AADT	1120
DHV - % of AADT	13
Design Hour Volume	146
Heavy Trucks (% of AADT)	20
Heavy Trucks (% of DHV)	15
Directional Distribution (% of DHV)	52
18 kip Equivalent P 2.0	272
18 kip Equivalent P 2.5	259
Design Speed (mph)	35

HYDROLOGIC DATA

Drainage Area	44.7 sq mi
Design Discharge (Q50)	2297 cfs
Check Discharge (Q100)	2700 cfs
Headwater Elevation (Q50)	159.67 ft
Headwater Elevation (Q100)	160.42 ft
Discharge Velocity (Q50)	9.61 fps
Discharge Velocity (Q100)	10.4 fps
Headwater Elevation (Q1.1)	154.84 ft
Discharge Velocity (Q1.1)	5.75 fps
Headwater Elevation (Q25)	158.91 ft

MATERIALS

Concrete:	
Curbs & Transition Barriers	Class "LP"
All Other	Class "A"
Reinforcing Steel:	
Plain	ASTM A615/A615M, Grade 60
Epoxy Coated	ASTM A775/A775M, Grade 60
Glass Fiber Reinforced Polymer (GFRP)	CAN/CSA S807-10, ACI 440-IR-06
Structural Steel:	
All Material (except as noted)	ASTM A709/A709M, Grade 50W (unpainted)
H-Piles	ASTM A572/A572M, Grade 50
High Strength Bolts	ASTM A325, Type 3

BASIC DESIGN STRESSES

Concrete	f 'c = 4,000 psi
Reinforcing Steel	f y = 60,000 psi
Glass Fiber Reinforced Polymer (GFRP):	
Minimum Tensile Strength	90,000 psi
Minimum Elastic Modulus	6,000,000 psi
Structural Steel:	
ASTM A 709, Grade 50W	f y = 50,000 psi
ASTM A 572, Grade 50	f y = 50,000 psi
ASTM A 325	f μ = 120,000 psi

LIST OF DRAWINGS

Title Sheet 1
Estimated Quantities & Construction Notes 2
General Plan 3
Profile 4
Boring Location Plan & Interpretive Subsurface Profile 5
Boring Logs 6-7
Cross Sections 8-14
Abutment No. 1 Plan & Elevation 15
Abutment No. 1 Reinforcement 16
Abutment No. 1 Wingwall Reinforcement 17
Abutment No. 2 Plan & Elevation 18
Abutment No. 2 Reinforcement 19
Abutment No. 2 Wingwall Reinforcement 20
Framing Plan 21
Girder Details 22
Superstructure Plan 23
Superstructure Reinforcement Plan 24
Transverse Section 25
Superstructure Details 26
Reinforcing Schedule 27
Right of Way Map 28

UTILITIES

Northern New England Telephone Operations LLC (Fairpoint Communications)
Eastern Main Electrical Coop Inc.

MAINTENANCE OF TRAFFIC

Maintain one 13'-0" wide lane of alternating two way traffic over existing bridge through use of temporary signals while new bridge is constructed. Once new bridge has been constructed, run two way traffic over new bridge while existing bridge is being removed.

PROJECT LOCATION:	Meddybemps Bridge (#3736) over Denny's River. Located 0.23 of a mile Northeasterly of Green Hill Road. Latitude 45°-02'-18.35", Longitude -67°-21'-26.68"
PROGRAM AREA:	Bridge Program
OUTLINE OF WORK:	Construct new bridge, relocate 700 feet of Route 191 and remove existing bridge.

BECKER STRUCTURAL ENGINEERS
75 York Street, Portland, Maine 04101
207.879.1838 • beckerstructural.com

WIN 20506.00

STP-2050(600)

STATE OF MAINE
DEPARTMENT OF TRANSPORTATION
APPROVED
COMMISSIONER: DATE 3/28/16
CHIEF ENGINEER: DATE 3/28/16

STATE OF MAINE JOHN BURGESS 5745 LICENSED PROFESSIONAL ENGINEER
BRIDGE DESIGN
SIGNATURE
5745
P.E. NUMBER
03-08-2016
DATE
BECKER STRUCTURAL ENGINEERS, INC.

STATE OF MAINE BRIAN J. REEVES 13554 LICENSED PROFESSIONAL ENGINEER
ROADWAY DESIGN
SIGNATURE
13554
P.E. NUMBER
3-8-2016
DATE
MAINE DEPARTMENT OF TRANSPORTATION

PROJECT INFORMATION	
PROGRAM	BRIDGE
PROJECT MANAGER	A. LATHE
DESIGNER	E.BROWNELL
CONSULTANT	BECKER
PROJECT RESIDENT	
CONTRACTOR	
PROJ. COMP. DATE	

MEDDYBEMPS
MEDDYBEMPS BRIDGE
TITLE SHEET

SHEET NUMBER
1
OF 28

Filename:\00\BRIDGE\MSTA\001_Title.dgn Division: BRIDGE Username: common Date:3/7/2016

ESTIMATED QUANTITIES			
ITEM NO.	DESCRIPTION	QUANTITY	UNIT
202.19	REMOVING EXISTING BRIDGE (300 CY)	1	LS
202.202	REMOVING PAVEMENT SURFACE	180	SY
203.20	COMMON EXCAVATION	1970	CY
203.21	ROCK EXCAVATION	15	CY
203.24	COMMON BORROW	525	CY
203.25	GRANULAR BORROW	630	CY
206.082	STR EA EXC - MAJOR STRUCTURES	20	CY
304.10	AGGR SUBB COURSE - GRAVEL	1765	CY
403.2081	12.5 MM POLYMER MODIFIED HMA	202	T
403.209	HOT MIX ASPHALT 9.5 MM HMA (INCID.)	12	T
403.211	HOT MIX ASPHALT (SHIMMING)	30	T
403.213	HOT MIX ASPHALT 12.5 MM BASE	509	T
403.2131	12.5 MM POLYMER MODIFIED HMA BASE	22	T
409.15	BITUMINOUS TACK COAT - APPLIED	210	G
501.231	DYNAMIC LOADING TEST	1	EA
501.50	STEEL H-BEAM PILES 89 LBS/FT. DELIVERED	132	LF
501.501	STEEL H-BEAM PILES 89 LBS/FT. IN PLACE	60	LF
501.502	ROCK-SOCKETED H-PILES 89 LBS/FT. IN PLACE	72	LF
501.903	PILE TIPS - ROCK INJECTOR POINT	4	EA
501.92	PILE DRIVING EQUIPMENT MOBILIZATION	1	LS
502.219	STRUCTURAL CONCRETE, ABUT & RET WALLS (107 CY)	1	LS
502.26	STR CONC RD & SW SLABS ON STEEL BRIDGE (63 CY)	1	LS
502.31	STRUCTURAL CONCRETE APPROACH SLAB (23 CY)	1	LS
502.49	STRUCTURAL CONCRETE CURBS AND SIDEWALKS (10 CY)	1	LS
503.12	REINFORCING STEEL, FABRICATED/DELIVERED	16000	LB
503.13	REINFORCING STEEL, PLACING	16000	LB
503.14	EPOXY-COATED REINF STEEL, FAB'D/DELIV'D	2600	LB
503.15	EPOXY-COATED REINF STEEL, PLACED	2600	LB
504.701	STRUCTURAL STEEL FAB'D & DELIV'D, ROLLED (72,600 LBS)	1	LS
504.71	STRUCTURAL STEEL ERECTION (72,600 LBS)	1	LS
505.08	SHEAR CONNECTORS (872 EA)	1	LS
507.0811	STEEL BRIDGE RAILING, 2-BAR (170 LF)	1	LS
508.14	HIGH PERFORMANCE WATERPROOFING MEMBRANE (295 SY)	1	LS
514.06	CURING BOX FOR CONC CYL	1	EA
515.21	PROT COAT FOR CONC SURFACES (110 SY)	1	LS
520.232	EXPANSION DEVICE - ASPHALTIC PLUG JOINT	62	LF
524.301	TEMPORARY STRUCTURAL SUPPORT	1	LS
526.301	TEMPORARY CONCRETE BARRIER TYPE I (300 LF)	1	LS
526.34	PERMANENT CONC TRANSITION BARRIER	4	EA
527.34	WORK ZONE CRASH CUSHIONS	3	UN
530.30	GLASS FIBER REINFORCED POLYMER, FABRICATED & DELIVERED	25000	LF
530.31	GLASS FIBER REINFORCED POLYMER, PLACING	25000	LF
603.17	18" CULVERT PIPE OPTION I	158	LF
603.179	18" CULV PIPE OPTION III	25	LF
604.2494	CATCH BASIN TYPE F7-C	2	EA
605.09	6" UNDERDRAIN TYPE B	45	LF
605.11	12" UNDERDRAIN TYPE C	130	LF
606.1721	BRIDGE TRANSITION - TYPE I	4	EA
606.23	GUARDRAIL TYPE 3C - SINGLE RAIL	125	LF
606.353	REFLECTORIZED FLEXIBLE GUARDRAIL MARKER	8	EA
606.79	GUARDRAIL 350 FLARED TERMINAL	4	EA
607.1701	TEMPORARY CHAIN LINK FENCE - 6 FT. MOVEABLE	205	LF
607.181	CHAIN LINK FENCE - 8 FT. HIGH - SECURITY FENCING	205	LF
607.243	REMOVE CHAIN LINK FENCE	160	LF
609.31	CURB TYPE 3	136	LF
610.08	PLAIN RIPRAP	10	CY
610.16	HEAVY RIPRAP	920	CY
610.18	STONE DITCH PROTECTION	52	CY
613.319	EROSION CONTROL BLANKET	80	SY
615.07	LOAM	130	CY
618.14	SEEDING METHOD NUMBER 2	21	UN
619.14	EROSION CONTROL MIX	260	CY
620.58	EROSION CONTROL GEOTEXTILE	950	SY
620.661	DRAINAGE GEOCOMPOSITE INSTALLATION	44	SY
627.733	4" WHITE OR YELLOW PAINTED PAVEMENT MARKING LINE	2100	LF
627.76	TEMP PVMT MARKING LINE, WHITE OR YELLOW (100 LF)	1	LS
627.77	REMOVING PAVEMENT MARKINGS	24	SF
629.05	HAND LABOR, STRAIGHT TIME	20	HR
631.12	ALL-PURPOSE EXCAVATOR (INCLUDING OPERATOR)	20	HR
631.14	GRADER (INCLUDING OPERATOR)	20	HR
631.15	ROLLER, EARTH AND BASE COURSE (INCLUDING OPERATOR)	20	HR
631.172	TRUCK-LARGE (INCLUDING OPERATOR)	20	HR
639.19	FIELD OFFICE TYPE B	1	EA
643.72	TEMPORARY TRAFFIC SIGNAL AT RTE 191 & MEDDYBEMPS BRIDGE	1	LS
646.35	SEAL ABANDONED WELLS (4 EA)	1	LS
652.312	TYPE III BARRICADE	6	EA
652.33	DRUM	30	EA
652.34	CONE	30	EA
652.35	CONSTRUCTION SIGNS	300	SF
652.361	MAINT OF TRAFF CONTROL DEVICES (120 CD)	1	LS
652.38	FLAGGER	200	HR
656.75	TEMP. SOIL EROS. AND WATER POLLUTION CONTROL	1	LS
659.10	MOBILIZATION	1	LS

GENERAL CONSTRUCTION NOTES

1. During construction, one 13'-0" wide lane of two way alternating traffic will be maintained on the existing roadway. Traffic will be controlled through use of temporary signals.

2. For easements, construction limits and right of way lines, refer to Right of Way Map.

3. The Department has cut down all the trees and has left the wood debris on the side slopes within the clearing limits. The Contractor shall be responsible for removal of the woody debris. Payment for this work will be considered incidental to related Contract items.

4. All utility facilities shall be adjusted by the respective utilities unless otherwise noted.

5. Do not excavate for Aggregate Subbase Course where existing material is suitable as determined by the Resident.

6. In areas where the Resident directs the Contractor not to excavate to the subgrade line shown on the plans, payment for removing existing pavement, grubbing, shaping, ditching, and compacting the existing subbase and layers of new subbase 6 inches or less thick will be made under appropriate equipment rental items.

7. All embankment material, except as otherwise shown, shall be Granular Borrow meeting the requirements of Subsection 703.19, Material for Underwater Backfill.

8. Place loam 2 inches deep on all new or reconstructed sideslopes or as directed by the Resident.

9. Erosion Control Mix may be substituted in those areas normally receiving loam and seed as directed by the Resident. Placement shall be in accordance with Standard Specifications Section 619, Mulch. Payment will be made under Item No. 619.1401, Erosion Control Mix.

10. Place a 24-in. wide strip of Temporary Erosion Control Blanket on the sideslopes along the top of the riprap and behind the wingwalls.

11. An NCHRP350 compliant guardrail end treatment shall be installed concurrently with the placement of each section of beam guardrail.

12. Extended-use Erosion Control Blanket, seeded gutters, riprap downspouts, and other gutters lined with Stone Ditch Protection shall be constructed after paving and shoulder work is completed, where it is apparent that runoff will cause continual erosion. Payment will be made under the appropriate Contract items.

13. Protective Coating for Concrete Surfaces shall be applied to the following areas:

All exposed surfaces of concrete curbs.
Fascias down to the drip notch.
All exposed surfaces of Concrete Transition Barriers

14. Project information referred to below may be accessed at the following MaineDOT web address: http://www.maine.gov/mdot/contractors/.

15. The existing bridge plans may be accessed at the MaineDOT web address. The plans are reproductions of the original drawings as prepared for the construction of the bridge. It is very unlikely that the plans will show any construction field changes or any alterations which may have been made to the bridge during its life span.

16. The hydrologic report of the bridge site may be accessed at the MaineDOT web address. The hydrologic report is based on MaineDOT's interpretation of the information obtained for the subject site. No assurance is given that the information or the conclusions of the report will be representative of actual conditions at the time of construction.

17. The project geotechnical report titled: Geotechnical Design Report for the Replacement of Meddybemps Bridge, Meddybemps, Maine, Soils Report 2014-26, November 26, 2014, with Addendum #1 dated September 3, 2015 may be accessed at the MaineDOT web address.

18. Geotechnical information furnished or referred to in this plan set is for the use of the Bidders and the Contractor. No assurance is given that the information or interpretations will be representative of actual subsurface conditions at the construction site. MaineDOT will not be responsible for the Bidders' or Contractor's interpretations of, or conclusions drawn from, the geotechnical information. The boring logs contained in the plan set present factual and interpretive subsurface information collected at discrete locations. Data provided may not be representative of the subsurface conditions between the boring locations.

19. The existing bridge is located immediately adjacent to an EPA Superfund site named Eastern Surplus Company. Information from the EPA about this site is available at the following website:

http://yosemite.epa.gov/r1/npl_pad.nsf/701b6886f189ceae85256bd20014e93d/c920d8d2088266b88525690d00449689!OpenDocument

20. Quantities included for pay items measured and paid for by Lump Sum are estimated quantities and are provided by MaineDOT for informational purposes only. Lump Sum pay items will be paid for at the Contract Bid amount, with no addition or reduction in payment to the Contractor if the actual final quantities are different from the MaineDOT provided estimated quantities, except as follows:

a. If a Lump Sum pay item is eliminated, the requirements of Standard Specifications Section 109.2, Elimination of Items, will take precedence.

b. If other Contract Documents specifically allow a change in payment for a Lump Sum pay item, those requirements will be followed.

c. If a design change results in changes to estimated quantities for Lump Sum pay items, price adjustments will be made in accordance with Standard Specifications Section 109.7, Equitable Adjustments to Compensation.

21. The Contractor shall submit a Bridge Demolition Plan to the Resident at least 10 business days prior to the start of demolition work. The plan shall outline the methods and equipment to be used to remove and dispose of all materials included in the existing bridge. No work related to the removal of the bridge shall be undertaken by the Contractor until MaineDOT has reviewed the Bridge Demolition Plan for appropriateness and completeness. Payment for all work necessary for developing, submitting and finalizing the Demolition Plan will be considered incidental to the bridge removal pay item.

22. The existing bridge abutments shall be removed to approximately 2 feet above streambed level. The existing wingwalls shall be removed to a minimum of 1'-6" below existing grade. The existing bridge to be removed shall become property of the Contractor.

23. The Contractor shall contact Rebecca Hewett, MaineDEP, at 207-287-8554 a minimum of 10 days in advance to get access to the locked gate located at station 12+50+/- left.

24. Several sections of metal scaffolding located in the stream immediately upstream from the existing bridge shall be removed and properly disposed of by the Contractor. This work shall not be paid for directly but will be considered incidental to related contract items.

25. The Contractor operations shall not come into direct contact with the remains of the dam located immediately upstream from the existing bridge. Any temporary work including the cofferdams shall not be in direct contact with the dam structure.

26. All costs for cofferdams, including pumping maintenance, related temporary soil erosion and water pollution controls and removal will not be paid directly, but will be considered incidental to related Contract items.

27. The Maine Department of Environmental Protection (MDEP) has reported spills and releases involving petroleum products adjacent to the project. This involves releases due to past historic activities at the former Eastern Surplus Company Superfund Site. The site is located on the north side of Route 191 on the western side of the Denny's River roughly between MaineDOT station 12+00 to roughly MaineDOT station 14+25 left of center. Based on the scope of work presented, available data suggests that this contamination may be deeper than any excavation proposed by the Maine Department of Transportation (MaineDOT). However, in light of MDEP's findings, the Contractor shall employ appropriate health and safety measures to protect its workers against hazards associated with working near petroleum-impacted soils. Furthermore, the Contractor shall remain alert for any additional evidence of contamination. If the Contractor encounters evidence of soil or groundwater contamination, the Contractor shall secure the excavation, stop work in the contaminated area, and immediately notify the Resident. The Resident shall contact the Hydrogeologist in MaineDOT's Office of Safety and Compliance (MaineDOT-OSC) at 624-3004 and the MDEP at 800-482-0777. Work may only continue with authorization from the Resident.

BECKER STRUCTURAL ENGINEERS
75 York Street, Portland, Maine 04101
207.879.1838 ■ beckerstructural.com

STATE OF MAINE
DEPARTMENT OF TRANSPORTATION

STP-2050(600)

WIN 20506.00

BRIDGE NO. 3736

BRIDGE PLANS

PROJ. MANAGER	A. LATHE		
DESIGN-DETAILED	E.BROWNELL	D.BURGESS	02-03-16
CHECKED-REVIEWED	E.BROWNELL	J.BURGESS	02-03-16
DESIGN2-DETAILED2			
DESIGN3-DETAILED3			
REVISIONS 1			
REVISIONS 2			
REVISIONS 3			
REVISIONS 4			
FIELD CHANGES			

SIGNATURE

P.E. NUMBER

DATE

MEDDYBEMPS BRIDGE
DENNY'S RIVER
MEDDYBEMPS WASHINGTON COUNTY

ESTIMATED QUANTITIES & CONSTRUCTIONS NOTES

SHEET NUMBER
2
OF 28

Filename: ...\BRIDGE\MSTA\002_Estimate.dgn Division: BRIDGE Username: common Date:3/14/2016

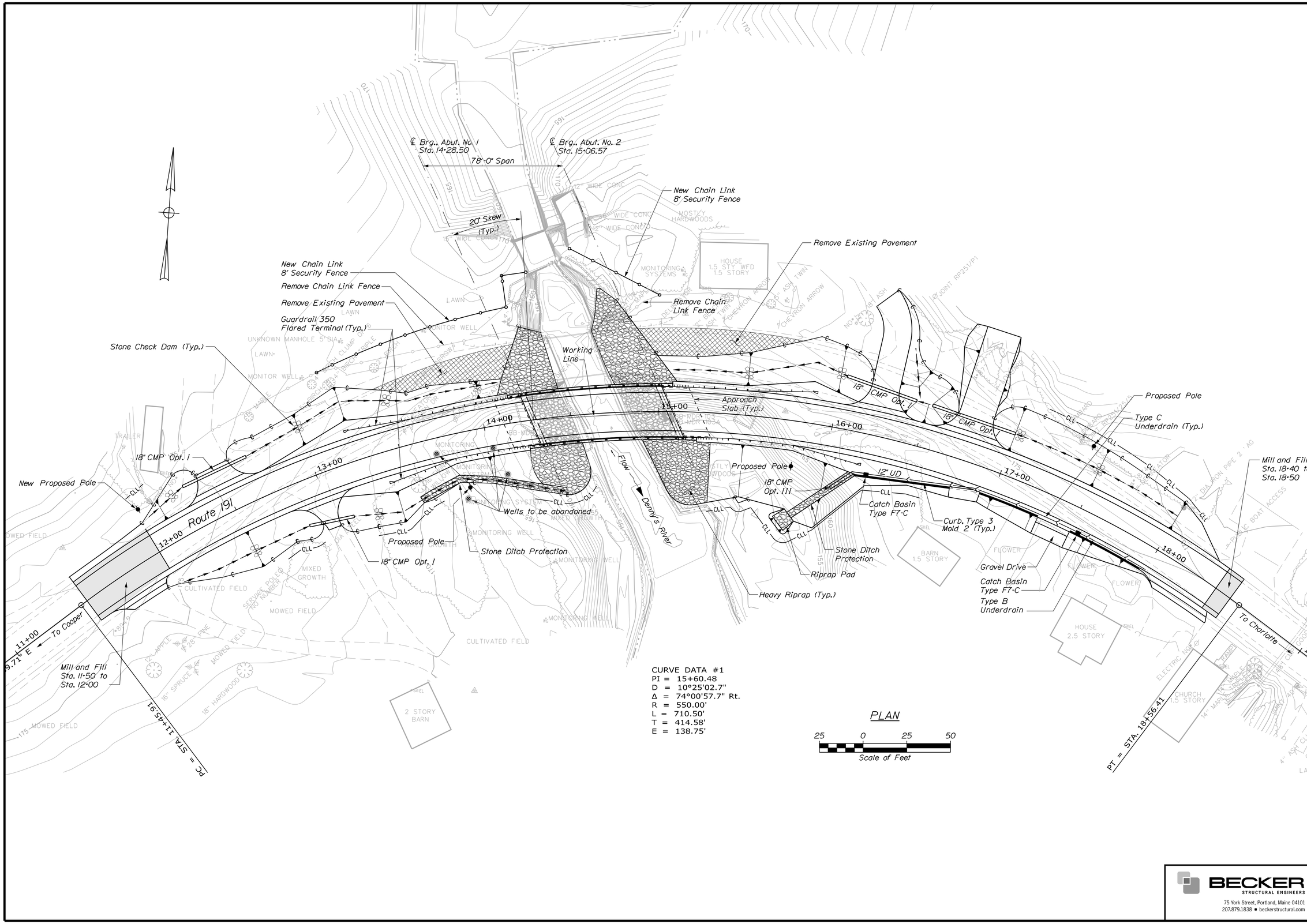

CURVE DATA #1
PI = 15+60.48
D = 10°25'02.7"
Δ = 74°00'57.7" Rt.
R = 550.00'
L = 710.50'
T = 414.58'
E = 138.75'

PLAN

25 0 25 50
Scale of Feet

BECKER
STRUCTURAL ENGINEERS
75 York Street, Portland, Maine 04101
207.879.1838 ■ beckerstructural.com

STATE OF MAINE
DEPARTMENT OF TRANSPORTATION

STP-2050(600)

WIN 20506.00

BRIDGE NO. 3736

BRIDGE PLANS

PROJ. MANAGER	A. LATHE	BY	DATE
DESIGN-DETAILED	E.S.B	D.E.S	02-03-16
CHECKED-REVIEWED	E.S.B	B.T.W	02-03-16
DESIGN2-DETAILED2			
DESIGN3-DETAILED3			
REVISIONS 1			
REVISIONS 2			
REVISIONS 3			
REVISIONS 4			
FIELD CHANGES			

SIGNATURE

P.E. NUMBER

DATE

MEDDYBEMPS BRIDGE
DENNY'S RIVER
MEDDYBEMPS WASHINGTON COUNTY

GENERAL PLAN

SHEET NUMBER

3

OF 28

Filename: ...\00\BRIDGE\MSTA\003_GenPlan.dgn Division: BRIDGE Username: common Date:3/7/2016

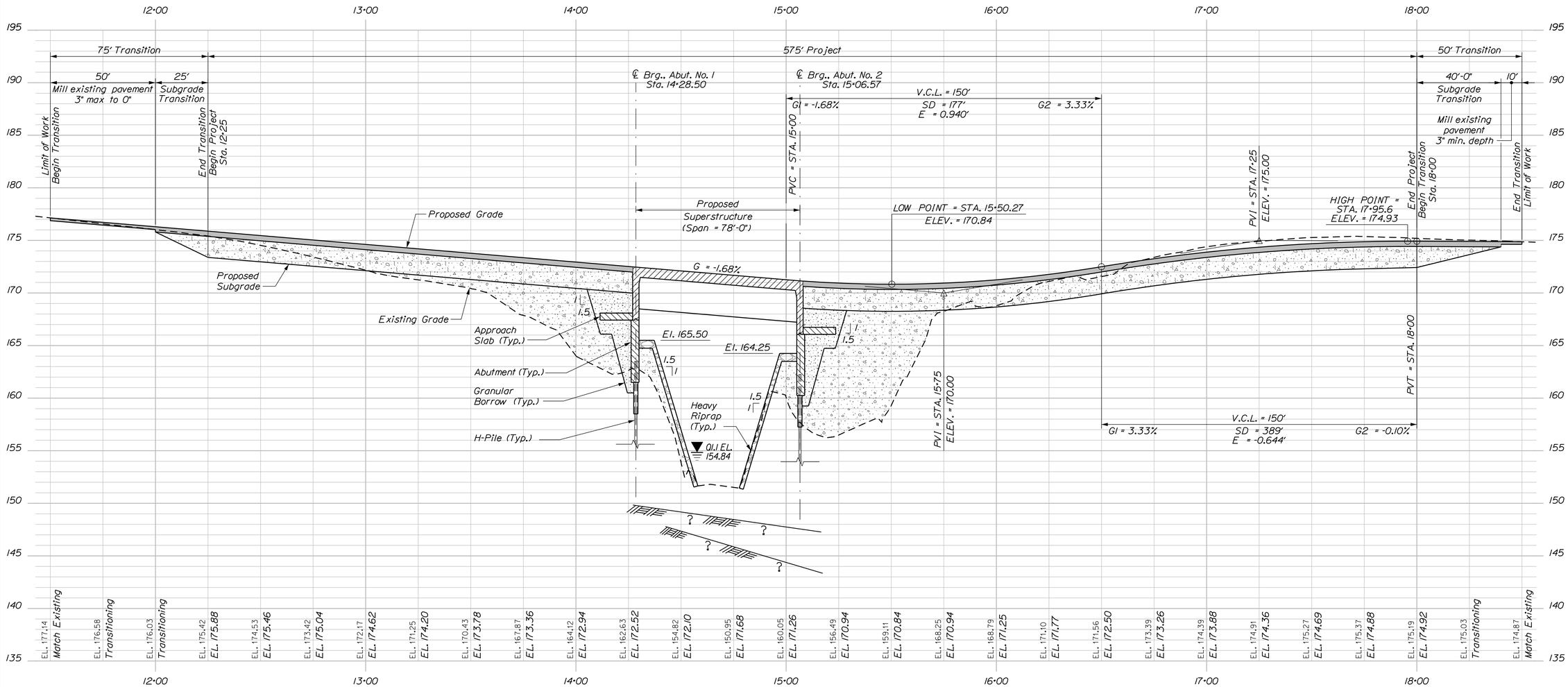

PROFILE

Horiz. 25 0 25 50

Vert. 5 0 5 10

Scale of Feet

STATE OF MAINE
DEPARTMENT OF TRANSPORTATION

STP-2050(600)

WIN 20506.00

BRIDGE NO. 3736

BRIDGE PLANS

PROJ. MANAGER	A. LATHE	BY	DATE
DESIGN-DETAILED	E.BROWNELL	D.BURGESS	02-03-16
CHECKED-REVIEWED	E.BROWNELL	J.BURGESS	02-03-16
DESIGN2-DETAILED2			
DESIGN3-DETAILED3			
REVISIONS 1			
REVISIONS 2			
REVISIONS 3			
REVISIONS 4			
FIELD CHANGES			

SIGNATURE

P.E. NUMBER

DATE

MEDDYBEMPS BRIDGE
DENNY'S RIVER
MEDDYBEMPS WASHINGTON COUNTY

PROFILE

SHEET NUMBER

4

OF 28

Filename: ...\00\BRIDGE\MSTA\004_Profile.dgn Division: BRIDGE Username: common Date:3/7/2016

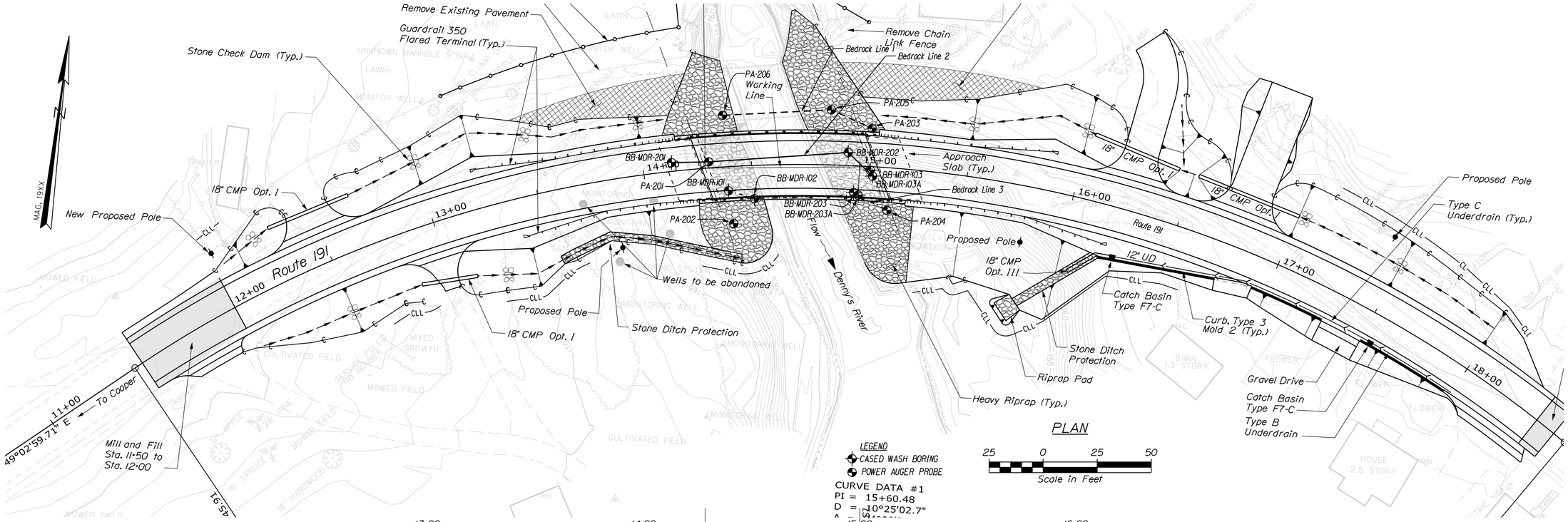

Note: This generalized interpretive soil profile is intended to convey trends in subsurface conditions. The boundaries between strata are approximate and idealized, and have been developed by interpretations of widely spaced explorations and samples. Actual soil transitions may vary and are probably more erratic. For more specific information refer to the exploration logs.

STATE OF MAINE
DEPARTMENT OF TRANSPORTATION

STP-2050(600)

WIN 20506.00

BRIDGE NO. 3736

BRIDGE PLANS

	BY	DATE
PROJ. MANAGER		
DESIGN-DETAILED		
CHECKED-REVIEWED		
DESIGN2-DETAILED2	L. KRUSINSKI	FEB 2015
DESIGN3-DETAILED3		
REVISIONS 1		
REVISIONS 2		
REVISIONS 3		
REVISIONS 4		
FIELD CHANGES		

SIGNATURE

P.E. NUMBER

DATE

MEDDYBEMPS BRIDGE
DENNY'S RIVER
MEDDYBEMPS WASHINGTON COUNTY

BORING LOCATION PLAN & INTERPRETIVE SUBSURFACE PROFILE

SHEET NUMBER

5

OF 28

Filename: ...\GEOTECH\MSTA\005_BLP&ISP1.dgn Division: BRIDGE Username: david.show Date:3/9/2016

Filename: ...\MSTA\006_BORING LOGS1.dgn Division: BRIDGE Username: david.show Date:3/9/2016

Maine Department of Transportation — Soil/Rock Exploration Log — US CUSTOMARY UNITS

Project: Meddybemps Bridge #3736 carries State Route 191 over Denny's Location: Meddybemps, Maine

Boring No.: BB-MDR-201 WIN: 20506.00

Driller: Northern Test Boring	Elevation (ft.) 163.3	Auger ID/OD: 5" Solid Stem	
Operator: Mike/Adam	Datum: NAVD88	Sampler: Standard Split Spoon	
Logged By: B. Wilder	Rig Type: Diedrick D-50 Track	Hammer Wt./Fall: 140#/30"	
Date Start/Finish: 7/14/2014; 12:00-15:30	Drilling Method: Cased Wash Boring	Core Barrel: NQ-2"	
Boring Location: 14+13.3, 4.1 ft Lt.	Casing ID/OD: HW	Water Level*: None Observed	
Hammer Efficiency Factor: 0.801	Hammer Type: Automatic ☒ Hydraulic ☐ Rope & Cathead ☐		

Definitions: D = Split Spoon Sample; MD = Unsuccessful Split Spoon Sample attempt; U = Thin Wall Tube Sample; MU = Unsuccessful Thin Wall Tube Sample attempt; V = Insitu Vane Shear Test, PP = Pocket Penetrometer; MV = Unsuccessful Insitu Vane Shear Test attempt; R = Rock Core Sample; SSA = Solid Stem Auger; HSA = Hollow Stem Auger; RC = Roller Cone; WOH = weight of 140lb. hammer; WOR/C = weight of rods or casing; WO1P = Weight of one person; S_u = Insitu Field Vane Shear Strength (psf); T_v = Pocket Torvane Shear Strength (psf); q_p = Unconfined Compressive Strength (ksf); Nuncorrected = Raw Field SPT N-value; Hammer Efficiency Factor = Annual Calibration Value; N_{60} = SPT N-uncorrected corrected for hammer efficiency; N_{60} = (Hammer Efficiency Factor/60%)*N-uncorrected; $S_{u(lab)}$ = Lab Vane Shear Strength (psf); WC = water content, percent; LL = Liquid Limit; PL = Plastic Limit; PI = Plasticity Index; G = Grain Size Analysis; C = Consolidation Test

Depth (ft.)	Sample No.	Pen./Rec. (in.)	Sample Depth (ft.)	Blows (/6 in.) Shear Strength (psf) or RQD (%)	Nuncorrected	N_{60}	Casing Blows	Elevation (ft.)
0	1D	24/14	0.00 - 2.00	1/2/2/3	4	5	SSA	163.10
5	2D	24/18	5.00 - 7.00	6/6/4/4	10	13		
10	3D	4.8/4.8	10.00 - 10.40	50(4.8")	---		57	
	R1	36/32	11.80 - 14.80	RQD = 33%			0110 NQ-2	151.50
15	R2	48/46	14.80 - 18.80	RQD = 56%				
	R3	36/35	18.80 - 21.80	RQD = 50%				141.50
20								
25								

Visual Description and Remarks:
0.2" SOD.
Brown, damp, loose, Silty, fine to medium SAND, trace gravel. (Topsoil and Reworked Native Soils).
Olive-brown, damp, stiff, SILT, some fine to medium SAND, trace gravel. (Weathered Glaciomarine Deposits).
Grey brown, wet, very dense, Gravelly, fine to coarse SAND, little silt. (Glacial Till).
Cobble from 10.4-10.7 ft bgs.
Roller Coned ahead to 11.8 ft bgs.
0110 blows for 0.8 ft.
Top of Bedrock at Elev. 151.5 ft.
R1:Bedrock: Dark grey, fine to medium grained, DIORITE, hard, slightly weathered, joint set at low angle to 45 degrees, moderately close, tight, no infilling. Rock Mass Quality = Poor.
R1:Core Times (minsec)
11.8-12.8 ft (2:30)
12.8-13.8 ft (2:25)
13.8-14.8 ft (3:50) 89% Recovery
Core Blocked
R2:Bedrock: Similar to R1, except fresh. Rock Mass Quality = Fair.
R2:Core Times (minsec)
14.8-15.8 ft (2:20)
15.8-16.8 ft (1:45)
16.8-17.8 ft (1:40)
17.8-18.8 ft (3:40) 89% Recovery
Core Blocked
R3: Bedrock: Similar to R2. Rock Mass Quality = Poor.
R3:Core Times (minsec)
18.8-19.8 ft (2:00)
19.8-20.8 ft (2:20)
20.8-21.8 ft (2:25) 97% Recovery
Bottom of Exploration at 21.80 feet below ground surface.

Remarks: Auto Hammer #283

Stratification lines represent approximate boundaries between soil types; transitions may be gradual.

* Water level readings have been made at times and under conditions stated. Groundwater fluctuations may occur due to conditions other than those present at the time measurements were made.

Page 1 of 1 — Boring No.: BB-MDR-201

Maine Department of Transportation — Soil/Rock Exploration Log — US CUSTOMARY UNITS

Project: Meddybemps Bridge #3736 carries State Route 191 over Denny's Location: Meddybemps, Maine

Boring No.: BB-MDR-101 WIN: 20506.00

Driller: Northern Test Boring	Elevation (ft.) 158.9	Auger ID/OD: 5" Solid Stem	
Operator: Mike/Adam	Datum: NAVD88	Sampler: Standard Split Spoon	
Logged By: B. Wilder	Rig Type: Diedrick D-50 Track	Hammer Wt./Fall: 140#/30"	
Date Start/Finish: 1/13/2014; 10:00-15:30	Drilling Method: Cased Wash Boring	Core Barrel: NQ-2"	
Boring Location: 14+38.6, 11.1 ft Rt.	Casing ID/OD: HW	Water Level*: 4.2 ft bgs.	
Hammer Efficiency Factor: 0.801	Hammer Type: Automatic ☒ Hydraulic ☐ Rope & Cathead ☐		

Definitions: D = Split Spoon Sample; MD = Unsuccessful Split Spoon Sample attempt; U = Thin Wall Tube Sample; MU = Unsuccessful Thin Wall Tube Sample attempt; V = Insitu Vane Shear Test, PP = Pocket Penetrometer; MV = Unsuccessful Insitu Vane Shear Test attempt; R = Rock Core Sample; SSA = Solid Stem Auger; HSA = Hollow Stem Auger; RC = Roller Cone; WOH = weight of 140lb. hammer; WOR/C = weight of rods or casing; WO1P = Weight of one person; S_u = Insitu Field Vane Shear Strength (psf); T_v = Pocket Torvane Shear Strength (psf); q_p = Unconfined Compressive Strength (ksf); Nuncorrected = Raw Field SPT N-value; Hammer Efficiency Factor = Annual Calibration Value; N_{60} = SPT N-uncorrected corrected for hammer efficiency; N_{60} = (Hammer Efficiency Factor/60%)*N-uncorrected; $S_{u(lab)}$ = Lab Vane Shear Strength (psf); WC = water content, percent; LL = Liquid Limit; PL = Plastic Limit; PI = Plasticity Index; G = Grain Size Analysis; C = Consolidation Test

Depth (ft.)	Sample No.	Pen./Rec. (in.)	Sample Depth (ft.)	Blows (/6 in.) Shear Strength (psf) or RQD (%)	Nuncorrected	N_{60}	Casing Blows	Elevation (ft.)
0	1D	6/6	0.00 - 0.50	55(6")	---		SSA	158.40
5	2D	24/16	4.50 - 6.50	7/5/14/9	19	25		
							20	
							26	
							88	
							85	
10							0110 NQ-2	149.50
	R1	60/57	11.40 - 16.40	RQD = 53%			NQ-2	
15	R2	60/60	16.40 - 21.40	RQD = 72%				
20								137.50
25								

Visual Description and Remarks:
Brown, wet, fine to coarse SAND, some silt, little gravel, trace roots. (Topsoil).
Cobble from 0.5-1.0 ft bgs.
Brown, wet, medium dense, fine to coarse SAND, some silt, little gravel.
Cobble from 7.9-8.4 ft bgs.
0110 blows for 0.4 ft.
Top of Bedrock at Elev. 149.5 ft.
Roller Coned ahead to 11.4 ft bgs.
R1: Bedrock: Dark grey, fine grained DIORITE, hard, fresh, joint set at low to moderately dipping angles, closely spaced, tight. Rock Mass Quality = Fair.
R1:Core Times (minsec)
11.4-12.4 ft (3:41)
12.4-13.4 ft (1:54)
13.4-14.4 ft (1:55)
14.4-15.4 ft (1:44)
15.4-16.4 ft (2:21) 95% Recovery
R2:Bedrock: Similar to R1. Rock Mass Quality = Fair.
R2:Core Times (minsec)
16.4-17.4 ft (1:25)
17.4-18.4 ft (1:36)
18.4-19.4 ft (1:25)
19.4-20.4 ft (1:22)
20.4-21.4 ft (1:30) 100% Recovery
Bottom of Exploration at 21.40 feet below ground surface.

Remarks: Auto Hammer #283

Stratification lines represent approximate boundaries between soil types; transitions may be gradual.

* Water level readings have been made at times and under conditions stated. Groundwater fluctuations may occur due to conditions other than those present at the time measurements were made.

Page 1 of 1 — Boring No.: BB-MDR-101

Maine Department of Transportation — Soil/Rock Exploration Log — US CUSTOMARY UNITS

Project: Meddybemps Bridge #3736 carries State Route 191 over Denny's Location: Meddybemps, Maine

Boring No.: BB-MDR-102 WIN: 20506.00

Driller: Northern Test Boring	Elevation (ft.) 156.3	Auger ID/OD: 5" Solid Stem	
Operator: Mike/Adam	Datum: NAVD88	Sampler: Standard Split Spoon	
Logged By: B. Wilder	Rig Type: Diedrick D-50 Track	Hammer Wt./Fall: 140#/30"	
Date Start/Finish: 1/14/2014; 07:30-11:30	Drilling Method: Cased Wash Boring	Core Barrel: NQ-2"	
Boring Location: 14+50.7, 15.4 ft Rt.	Casing ID/OD: HW & NW	Water Level*: 4.0 ft bgs.	
Hammer Efficiency Factor: 0.801	Hammer Type: Automatic ☒ Hydraulic ☐ Rope & Cathead ☐		

Definitions: D = Split Spoon Sample; MD = Unsuccessful Split Spoon Sample attempt; U = Thin Wall Tube Sample; MU = Unsuccessful Thin Wall Tube Sample attempt; V = Insitu Vane Shear Test, PP = Pocket Penetrometer; MV = Unsuccessful Insitu Vane Shear Test attempt; R = Rock Core Sample; SSA = Solid Stem Auger; HSA = Hollow Stem Auger; RC = Roller Cone; WOH = weight of 140lb. hammer; WOR/C = weight of rods or casing; WO1P = Weight of one person; S_u = Insitu Field Vane Shear Strength (psf); T_v = Pocket Torvane Shear Strength (psf); q_p = Unconfined Compressive Strength (ksf); Nuncorrected = Raw Field SPT N-value; Hammer Efficiency Factor = Annual Calibration Value; N_{60} = SPT N-uncorrected corrected for hammer efficiency; N_{60} = (Hammer Efficiency Factor/60%)*N-uncorrected; $S_{u(lab)}$ = Lab Vane Shear Strength (psf); WC = water content, percent; LL = Liquid Limit; PL = Plastic Limit; PI = Plasticity Index; G = Grain Size Analysis; C = Consolidation Test

Depth (ft.)	Sample No.	Pen./Rec. (in.)	Sample Depth (ft.)	Blows (/6 in.) Shear Strength (psf) or RQD (%)	Nuncorrected	N_{60}	Casing Blows	Elevation (ft.)
0	1D	24/13	0.00 - 2.00	4/6/7/7	13	17	SSA	
								154.30
5	2D	12/12	4.50 - 5.50	8/54	---			
							12	
							14	
							64	
							40	
10	R1	60/60	9.10 - 14.10	RQD = 67%			NQ-2	147.20
15	R2	60/60	14.40 - 19.40	RQD = 85%				
20								137.20
25								

Visual Description and Remarks:
Brown, wet, medium dense, fine to coarse SAND, some silt, little gravel, trace of organics and roots. (Topsoil).
Light brown, wet, fine to coarse SAND, some gravel, little silt, trace clay.
Set in NW Casing; roller coned ahead to 9.1 ft bgs.
Cobble from 5.5-6.2 ft bgs.
Top of Bedrock at Elev. 147.2 ft.
Set in NW Casing at 9.1 ft bgs.
R1:Bedrock: Dark grey, fine grained, DIORITE, hard, fresh, joint set at low to moderately dipping angles, closely spaced, tight. Rock Mass Quality = Fair.
R1:Core Times (minsec)
9.1-10.1 ft (1:48)
10.1-11.1 ft (2:17)
11.1-12.1 ft (1:10)
12.1-13.1 ft (1:05)
13.1-14.1 ft (1:40) 100% Recovery
R2:Bedrock: Similar to R1, except Rock Mass Quality = Good.
R2:Core Times (minsec)
14.1-15.1 ft (1:04)
15.1-16.1 ft (1:02)
16.1-17.1 ft (1:10)
17.1-18.1 ft (1:08)
18.1-19.1 ft (1:02) 100% Recovery
Bottom of Exploration at 19.10 feet below ground surface.

Remarks: Auto Hammer #283

Stratification lines represent approximate boundaries between soil types; transitions may be gradual.

* Water level readings have been made at times and under conditions stated. Groundwater fluctuations may occur due to conditions other than those present at the time measurements were made.

Page 1 of 1 — Boring No.: BB-MDR-102

Maine Department of Transportation — Soil/Rock Exploration Log — US CUSTOMARY UNITS

Project: Meddybemps Bridge #3736 carries State Route 191 over Denny's Location: Meddybemps, Maine

Boring No.: BB-MDR-202 WIN: 20506.00

Driller: Northern Test Boring	Elevation (ft.) 161.6	Auger ID/OD: 5" Solid Stem	
Operator: Mike/Adam	Datum: NAVD88	Sampler: Standard Split Spoon	
Logged By: B. Wilder	Rig Type: Diedrick D-50 Track	Hammer Wt./Fall: 140#/30"	
Date Start/Finish: 7/16/2014; 07:00-11:30	Drilling Method: Cased Wash Boring	Core Barrel: NQ-2"	
Boring Location: 14+94.5, 6.0 ft Lt.	Casing ID/OD: HW	Water Level*: 8.0 ft bgs.	
Hammer Efficiency Factor: 0.801	Hammer Type: Automatic ☒ Hydraulic ☐ Rope & Cathead ☐		

Definitions: D = Split Spoon Sample; MD = Unsuccessful Split Spoon Sample attempt; U = Thin Wall Tube Sample; MU = Unsuccessful Thin Wall Tube Sample attempt; V = Insitu Vane Shear Test, PP = Pocket Penetrometer; MV = Unsuccessful Insitu Vane Shear Test attempt; R = Rock Core Sample; SSA = Solid Stem Auger; HSA = Hollow Stem Auger; RC = Roller Cone; WOH = weight of 140lb. hammer; WOR/C = weight of rods or casing; WO1P = Weight of one person; S_u = Insitu Field Vane Shear Strength (psf); T_v = Pocket Torvane Shear Strength (psf); q_p = Unconfined Compressive Strength (ksf); Nuncorrected = Raw Field SPT N-value; Hammer Efficiency Factor = Annual Calibration Value; N_{60} = SPT N-uncorrected corrected for hammer efficiency; N_{60} = (Hammer Efficiency Factor/60%)*N-uncorrected; $S_{u(lab)}$ = Lab Vane Shear Strength (psf); WC = water content, percent; LL = Liquid Limit; PL = Plastic Limit; PI = Plasticity Index; G = Grain Size Analysis; C = Consolidation Test

Depth (ft.)	Sample No.	Pen./Rec. (in.)	Sample Depth (ft.)	Blows (/6 in.) Shear Strength (psf) or RQD (%)	Nuncorrected	N_{60}	Casing Blows	Elevation (ft.)
0	1D	24/14	0.00 - 2.00	1/2/4/13	6	8	SSA	
								157.60
5	2D	14.4/7	5.00 - 6.20	3/5/50(2.4")	---			
10								149.30
							RC	
15	R1	60/60	14.50 - 19.50	RQD = 87%			NQ-2	
20	R2	60/60	19.50 - 24.50	RQD = 62%				137.10
25								

Visual Description and Remarks:
Brown, moist, loose, fine to coarse SAND, little gravel, little silt, occasional cobble.
Brown, wet, very dense, Gravelly fine to coarse SAND, little silt, occasional cobbles.
Cobble from 10.0-10.6 ft bgs. Very cobbley from 10.0-12.3 ft bgs.
Top of Bedrock at Elev. 149.3 ft.
Roller Coned ahead from 12.3-14.5 ft bgs.. NO Breaks.
R1: Bedrock: Grey, fine to medium grained, DIORITE, very slightly weathered, joint set a low angles, moderately closely spaced, tight. Rock Mass Quality = Good.
R1:Core Times (minsec)
14.5-15.5 ft (1:45)
15.5-16.5 ft (2:10)
16.5-17.5 ft (2:30)
17.5-18.5 ft (2:30)
18.5-19.5 ft (3:00) 100% Recovery
R2:Bedrock: Similar to R1 except fresh. Rock Mass Quality = Fair.
R2:Core Times (minsec)
19.5-20.5 ft (2:00)
20.5-21.5 ft (2:10)
21.5-22.5 ft (1:50)
22.5-23.5 ft (2:00)
23.5-24.5 ft (2:20) 100% Recovery
Bottom of Exploration at 24.50 feet below ground surface.

Remarks: Auto Hammer #283

Stratification lines represent approximate boundaries between soil types; transitions may be gradual.

* Water level readings have been made at times and under conditions stated. Groundwater fluctuations may occur due to conditions other than those present at the time measurements were made.

Page 1 of 1 — Boring No.: BB-MDR-202

Maine Department of Transportation — Soil/Rock Exploration Log — US CUSTOMARY UNITS

Project: Meddybemps Bridge #3736 carries State Route 191 over Denny's Location: Meddybemps, Maine

Boring No.: BB-MDR-103 WIN: 20506.00

Driller: Northern Test Boring	Elevation (ft.) 157.0	Auger ID/OD: 5" Solid Stem	
Operator: Mike/Adam	Datum: NAVD88	Sampler: Standard Split Spoon	
Logged By: B. Wilder	Rig Type: Diedrick D-50 Track	Hammer Wt./Fall: 140#/30"	
Date Start/Finish: 1/14/2014; 12:00-16:00	Drilling Method: Cased Wash Boring	Core Barrel: NQ-2"	
Boring Location: 15+05+, 1.1 ft Rt.	Casing ID/OD: HW	Water Level*: 3.7 ft bgs.	
Hammer Efficiency Factor: 0.801	Hammer Type: Automatic ☒ Hydraulic ☐ Rope & Cathead ☐		

Definitions: D = Split Spoon Sample; MD = Unsuccessful Split Spoon Sample attempt; U = Thin Wall Tube Sample; MU = Unsuccessful Thin Wall Tube Sample attempt; V = Insitu Vane Shear Test, PP = Pocket Penetrometer; MV = Unsuccessful Insitu Vane Shear Test attempt; R = Rock Core Sample; SSA = Solid Stem Auger; HSA = Hollow Stem Auger; RC = Roller Cone; WOH = weight of 140lb. hammer; WOR/C = weight of rods or casing; WO1P = Weight of one person; S_u = Insitu Field Vane Shear Strength (psf); T_v = Pocket Torvane Shear Strength (psf); q_p = Unconfined Compressive Strength (ksf); Nuncorrected = Raw Field SPT N-value; Hammer Efficiency Factor = Annual Calibration Value; N_{60} = SPT N-uncorrected corrected for hammer efficiency; N_{60} = (Hammer Efficiency Factor/60%)*N-uncorrected; $S_{u(lab)}$ = Lab Vane Shear Strength (psf); WC = water content, percent; LL = Liquid Limit; PL = Plastic Limit; PI = Plasticity Index; G = Grain Size Analysis; C = Consolidation Test

Depth (ft.)	Sample No.	Pen./Rec. (in.)	Sample Depth (ft.)	Blows (/6 in.) Shear Strength (psf) or RQD (%)	Nuncorrected	N_{60}	Casing Blows	Elevation (ft.)
0	1D	24/5	0.00 - 2.00	2/2/2/2	4	5	SSA	
								155.00
5	2D	24/10	5.00 - 7.00	12/12/14/27	26	35	15	
							26	
							44	
							87	
10	R1	60/60	9.50 - 14.50	RQD = 62%			050 NQ-2	147.50
15								142.50
20								
25								

Visual Description and Remarks:
Dark brown, saturated, loose, fine to coarse SAND, little gravel, little silt, trace organics. (Topsoil).
Cobble from 3.4-4.0 ft bgs.
Dark brown, dense, wet, fine to coarse SAND, little silt, little gravel, with rock fragment.
Roller Coned ahead to 9.5 ft bgs.
050 blows for 0.5 ft.
Top of Bedrock at Elev. 147.5 ft.
Set in NW Casing at 9.5 ft bgs.
R1:Bedrock: Grey, coarse grained, GRANODIORITE transitioning to DIORITE when back to GRANODIORITE, hard, fresh to slightly weathered and fractured, joint set at low to moderately dipping angles, closely spaced, open to tight, slightly weathered surfaces. Rock Mass Quality = Fair.
R1:Core Times (minsec)
9.5-10.5 ft (2:10)
10.5-11.5 ft (1:10)
11.5-12.5 ft (1:44)
12.5-13.5 ft (1:28)
13.5-14.5 ft (2:00) 100% Recovery
Bottom of Exploration at 14.50 feet below ground surface.
Twisted off outer core barrel, left in hole. Moved to BB-MDR-103A.

Remarks: Auto Hammer #283

Stratification lines represent approximate boundaries between soil types; transitions may be gradual.

* Water level readings have been made at times and under conditions stated. Groundwater fluctuations may occur due to conditions other than those present at the time measurements were made.

Page 1 of 1 — Boring No.: BB-MDR-103

Maine Department of Transportation — Soil/Rock Exploration Log — US CUSTOMARY UNITS

Project: Meddybemps Bridge #3736 carries State Route 191 over Denny's Location: Meddybemps, Maine

Boring No.: BB-MDR-103A WIN: 20506.00

Driller: Northern Test Boring	Elevation (ft.) 156.2	Auger ID/OD: 5" Solid Stem	
Operator: Mike/Adam	Datum: NAVD88	Sampler: Standard Split Spoon	
Logged By: B. Wilder	Rig Type: Diedrick D-50 Track	Hammer Wt./Fall: 140#/30"	
Date Start/Finish: 1/15/2014; 07:00-13:00	Drilling Method: Cased Wash Boring	Core Barrel: NQ-2"	
Boring Location: 15+06.2, 4.3 ft Rt.	Casing ID/OD: HW	Water Level*: 3.6 ft bgs.	
Hammer Efficiency Factor: 0.801	Hammer Type: Automatic ☒ Hydraulic ☐ Rope & Cathead ☐		

Definitions: D = Split Spoon Sample; MD = Unsuccessful Split Spoon Sample attempt; U = Thin Wall Tube Sample; MU = Unsuccessful Thin Wall Tube Sample attempt; V = Insitu Vane Shear Test, PP = Pocket Penetrometer; MV = Unsuccessful Insitu Vane Shear Test attempt; R = Rock Core Sample; SSA = Solid Stem Auger; HSA = Hollow Stem Auger; RC = Roller Cone; WOH = weight of 140lb. hammer; WOR/C = weight of rods or casing; WO1P = Weight of one person; S_u = Insitu Field Vane Shear Strength (psf); T_v = Pocket Torvane Shear Strength (psf); q_p = Unconfined Compressive Strength (ksf); Nuncorrected = Raw Field SPT N-value; Hammer Efficiency Factor = Annual Calibration Value; N_{60} = SPT N-uncorrected corrected for hammer efficiency; N_{60} = (Hammer Efficiency Factor/60%)*N-uncorrected; $S_{u(lab)}$ = Lab Vane Shear Strength (psf); WC = water content, percent; LL = Liquid Limit; PL = Plastic Limit; PI = Plasticity Index; G = Grain Size Analysis; C = Consolidation Test

Depth (ft.)	Sample No.	Pen./Rec. (in.)	Sample Depth (ft.)	Blows (/6 in.) Shear Strength (psf) or RQD (%)	Nuncorrected	N_{60}	Casing Blows	Elevation (ft.)
0							SSA	
5								
10	1D	24/15	10.00 - 12.00	15/33/32/34	65	87	38	
							110	144.70
15	R1	48/44	12.30 - 16.30	RQD = 17%			050 NQ-2	143.90
	R2	24/24	16.30 - 18.30	RQD = 0%				
20	R3	48/46	18.30 - 22.30	RQD = 29%				133.90
25								

Visual Description and Remarks:
Similar to BB-MDR-103.
Cobble from 3.6-4.2 ft bgs.
Cobble from 8.0-8.6 ft bgs.
Gray, wet, very dense, Gravelly fine to coarse SAND, little silt. (Glacial Till).
050 blows for 0.3 ft.
Roller Coned ahead to 12.3 ft bgs.
Top of Bedrock at Elev. 143.9 ft.
R1:Bedrock: Dark grey, coarse grained, GRANODIORITE, moderately hard, moderately weathered to very weathered, with fractured zones, joint set at low to moderately dipping angles, close, open, with sand and silt infill. Rock Mass Quality = Very Poor.
R1:Core Times (minsec)
12.3-13.3 ft (2:00)
13.3-14.3 ft (2:10)
14.3-15.3 ft (2:30)
15.3-16.3 ft (3:30) 92% Recovery
Core Blocked
R2:Bedrock: Similar to R1.
R2:Core Times (minsec)
16.3-17.3 ft (2:30)
17.3-18.3 ft (3:35) 100% Recovery
Core Blocked
R3:Bedrock: Similar to R1 except less fractured and less weathered, transitioning to DIORITE. Rock Mass Quality = Poor.
R3:Core Times (minsec)
18.3-19.3 ft (1:45)
19.3-20.3 ft (3:00)
20.3-21.3 ft (4:50)
21.3-22.3 ft (5:00) 96% Recovery
Core Blocked
Bottom of Exploration at 22.30 feet below ground surface.

Remarks: Auto Hammer #283

Stratification lines represent approximate boundaries between soil types; transitions may be gradual.

* Water level readings have been made at times and under conditions stated. Groundwater fluctuations may occur due to conditions other than those present at the time measurements were made.

Page 1 of 1 — Boring No.: BB-MDR-103A

State of Maine - Department of Transportation
Power Auger Probe Summary Sheet

Town(s): Meddybemps **Work Number: 20506.00**

Station (Feet)	Offset (Feet)	Weathered Rock (Feet)	Refusal (Feet)	No Refusal (Feet)	Elev. (Feet)	Comments / Date 7/14,16/2014
14+30.3	2.8 Lt.		12.0		162.9	PA-201
14+40.2	26.4 Rt.		6.2		158.1	PA-202
15+04.7	17.6 Lt.		18.4		167.4	PA-203
15+14.1	19.7 Rt.		8.2		153.9	PA-204
14+86.3	25.5 Lt.		19.2		169.7	PA-205
14+38.1	23.9 Lt.		19.4		170.0	PA-206

STATE OF MAINE
DEPARTMENT OF TRANSPORTATION
STP-2050(600)
WIN 20506.00
BRIDGE NO. 3736
BRIDGE PLANS

	BY	DATE
PROJ. MANAGER		
DESIGN-DETAILED		
CHECKED-REVIEWED		
DESIGN2-DETAILED2	L.KRUSINSKI	DEC 2014
DESIGN3-DETAILED3	T.WHITE	
REVISIONS 1		
REVISIONS 2		
REVISIONS 3		
REVISIONS 4		
FIELD CHANGES		

SIGNATURE
P.E. NUMBER
DATE

MEDDYBEMPS BRIDGE
DENNY'S RIVER
MEDDYBEMPS WASHINGTON COUNTY

BORING LOGS

SHEET NUMBER
6
OF 28

Filename: ...\MSTA\007_BORING LOGS2.dgn Division: BRIDGE Username: david.show Date:3/9/2016

Maine Department of Transportation

Soil/Rock Exploration Log
US CUSTOMARY UNITS

Project: Meddybemps Bridge #3736 carries State Route 191 over Denny's
Location: Meddybemps, Maine

Boring No.: BB-MDR-203
WIN: 20506.00

Driller:	Northern Test Boring	Elevation (ft.)	158.6
Operator:	Mike/Adam	Datum	NAVD88
Logged By:	B. Wilder	Rig Type:	Diedrick D-50 Track
Date Start/Finish:	7/15/2014; 09:30-12:30	Drilling Method:	Cased Wash Boring
Boring Location:	14+97.8, 12.4 ft Rt.	Casing ID/OD:	HW
Hammer Efficiency Factor: 0.801		Hammer Type	Automatic ☒ Hydraulic ☐ Rope & Cathead ☐

Auger ID/OD:	5" Solid Stem	
Sampler:	Standard Split Spoon	
Hammer Wt./Fall:	140#/30"	
Core Barrel:	NQ-2"	
Water Level*:	None Observed	

Definitions:
D = Split Spoon Sample
MD = Unsuccessful Split Spoon Sample attempt
U = Thin Wall Tube Sample
MU = Unsuccessful Thin Wall Tube Sample attempt
V = Insitu Vane Shear Test, PP = Pocket Penetrometer
MV = Insitu Vane Shear Test attempt
R = Rock Core Sample
SSA = Solid Stem Auger
HSA = Hollow Stem Auger
RC = Roller Cone
WOH = weight of 140lb. hammer
WOR/C = weight of rods or casing
WO1P = weight of one person
S_u = Insitu Field Vane Shear Strength (psf)
T_v = Pocket Torvane Shear Strength (psf)
q_p = Unconfined Compressive Strength (ksf)
N-uncorrected = Raw Field SPT N-value
Hammer Efficiency Factor = Annual Calibration Value
N_{60} = SPT N-uncorrected corrected for hammer efficiency
N_{60} = (Hammer Efficiency Factor/60%)*N-uncorrected
$S_{u(lab)}$ = Lab Vane Shear Strength (psf)
WC = water content, percent
LL = Liquid Limit
PL = Plastic Limit
PI = Plasticity Index
G = Grain Size Analysis
C = Consolidation Test

Depth (ft.)	Sample No.	Pen./Rec. (in.)	Sample Depth (ft.)	Blows (/6 in.) Shear Strength (psf) or RQD (%)	N-uncorrected	N_{60}	Casing Blows	Elevation (ft.)	Visual Description and Remarks	Laboratory Testing Results/ AASHTO and Unified Class
0	10	24/8	0.00 - 2.00	2/3/3/6	6	8	SSA		Brown, moist, loose, Gravelly fine to coarse SAND, little silt, occasional cobbles.	
									Boulder from 2.0-4.5 ft bgs.	
									Boulder from 3.4-4.7 ft bgs.	
5	MD	2.4/0	5.00 - 5.20						Failed sample attempt, Cobble from 5.2-5.8 ft bgs.	
	20	8.4/4	7.00 - 7.70	11/50(2.4")	---				Cobble from 6.6-7.0 ft bgs. Brown, wet, very dense, Gravelly fine to coarse SAND, trace silt, occasional cobbles. Boulder from 7.7-9.5 ft bgs.	
								149.10	9.50	
10	30	24/13	10.00 - 12.00	16/34/16/45	50	67			Grey, wet, very dense, gravelly fine to coarse SAND, occasional small and large cobbles. (Glacial Till).	
15								143.60	15.00	
20									Bottom of Exploration at 15.00 feet below ground surface. Broke casing no Boulder. moved to BB-MDR-203A.	
25										

Remarks:
Auto Hammer #283
Broke Casing. left 5 ft of casing in bore hole.

Stratification lines represent approximate boundaries between soil types; transitions may be gradual.

* Water level readings have been made at times and under conditions stated. Groundwater fluctuations may occur due to conditions other than those present at the time measurements were made.

Page 1 of 1
Boring No.: BB-MDR-203

Maine Department of Transportation

Soil/Rock Exploration Log
US CUSTOMARY UNITS

Project: Meddybemps Bridge #3736 carries State Route 191 over Denny's
Location: Meddybemps, Maine

Boring No.: BB-MDR-203A
WIN: 20506.00

Driller:	Northern Test Boring	Elevation (ft.)	158.6
Operator:	Mike/Adam	Datum	NAVD88
Logged By:	B. Wilder	Rig Type:	Diedrick D-50 Track
Date Start/Finish:	7/15/2014; 13:00-16:00	Drilling Method:	Cased Wash Boring
Boring Location:	15+00+, 13.5 ft Rt.	Casing ID/OD:	HW
Hammer Efficiency Factor: 0.801		Hammer Type	Automatic ☒ Hydraulic ☐ Rope & Cathead ☐

Auger ID/OD:	5" Solid and 6¾" Hollow	
Sampler:	Standard Split Spoon	
Hammer Wt./Fall:	140#/30"	
Core Barrel:	NQ-2"	
Water Level*:	9.0 ft bgs.	

Definitions:
D = Split Spoon Sample
MD = Unsuccessful Split Spoon Sample attempt
U = Thin Wall Tube Sample
MU = Unsuccessful Thin Wall Tube Sample attempt
V = Insitu Vane Shear Test, PP = Pocket Penetrometer
MV = Insitu Vane Shear Test attempt
R = Rock Core Sample
SSA = Solid Stem Auger
HSA = Hollow Stem Auger
RC = Roller Cone
WOH = weight of 140lb. hammer
WOR/C = weight of rods or casing
WO1P = weight of one person
S_u = Insitu Field Vane Shear Strength (psf)
T_v = Pocket Torvane Shear Strength (psf)
q_p = Unconfined Compressive Strength (ksf)
N-uncorrected = Raw Field SPT N-value
Hammer Efficiency Factor = Annual Calibration Value
N_{60} = SPT N-uncorrected corrected for hammer efficiency
N_{60} = (Hammer Efficiency Factor/60%)*N-uncorrected
$S_{u(lab)}$ = Lab Vane Shear Strength (psf)
WC = water content, percent
LL = Liquid Limit
PL = Plastic Limit
PI = Plasticity Index
G = Grain Size Analysis
C = Consolidation Test

Depth (ft.)	Sample No.	Pen./Rec. (in.)	Sample Depth (ft.)	Blows (/6 in.) Shear Strength (psf) or RQD (%)	N-uncorrected	N_{60}	Casing Blows	Elevation (ft.)	Visual Description and Remarks	Laboratory Testing Results/ AASHTO and Unified Class
0							SSA		Soils similar to BB-MDR-203. Auger to 15.0 ft bgs with Solid Stem, then auger to 15.0 ft bgs with Hollow Stem and set in HW Casing.	
									Boulder from 2.4-4.0 ft bgs.	
5									Boulder from 4.3-5.5 ft bgs.	
									Boulder from 8.0-9.6 ft bgs.	
10							20			
							15			
							46			
							30			
							51			
15							RC	143.40	15.20	
	R1	57.6/ 57.6	16.00 - 20.80	RQD = 57%			NQ-2		Top of Bedrock at Elev. 143.4 ft. Roller Cone Dead to 16.0 ft bgs. R1: Bedrock: Gray, fine to medium grained, DIORITE, hard, very slightly weathered to fresh, joint set a low angles to horizontal, moderately closely spaced-tight. Rock Mass Quality = Fair. R1:Core Times (min:sec) 16.0-17.0 ft (2:00) 17.0-18.0 ft (1:45) 18.0-19.0 ft (2:00) 19.0-20.0 ft (2:45) 20.0-20.8 ft (3:00) 100% Recovery Core Blocked	
20	R2	60/60	20.80 - 25.80	RQD = 48%					R2: Bedrock: Similar to R2, except Rock Mass Quality= Poor R2:Core Times (min:sec) 20.8-21.8 ft (2:45) 21.8-22.8 ft (2:15) 22.8-23.8 ft (1:45) 23.8-24.8 ft (1:35) 24.8-25.8 ft (2:00) 100% Recovery	
25								132.80	25.80	
30									Bottom of Exploration at 25.80 feet below ground surface.	
35										
40										
45										
50										

Remarks:
Auto Hammer #283

Stratification lines represent approximate boundaries between soil types; transitions may be gradual.

* Water level readings have been made at times and under conditions stated. Groundwater fluctuations may occur due to conditions other than those present at the time measurements were made.

Page 1 of 1
Boring No.: BB-MDR-203A

STATE OF MAINE
DEPARTMENT OF TRANSPORTATION

STP-2050(600)

WIN 20506.00

BRIDGE NO. 3736

BRIDGE PLANS

	BY	DATE
PROJ. MANAGER		
DESIGN-DETAILED		
CHECKED-REVIEWED		
DESIGN2-DETAILED2	L. KRUSINSKI	DEC 2014
DESIGN3-DETAILED3	T. WHITE	
REVISIONS 1		
REVISIONS 2		
REVISIONS 3		
REVISIONS 4		
FIELD CHANGES		

SIGNATURE

P.E. NUMBER

DATE

MEDDYBEMPS BRIDGE
DENNY'S RIVER
MEDDYBEMPS WASHINGTON COUNTY

BORING LOGS

SHEET NUMBER
7
OF 28

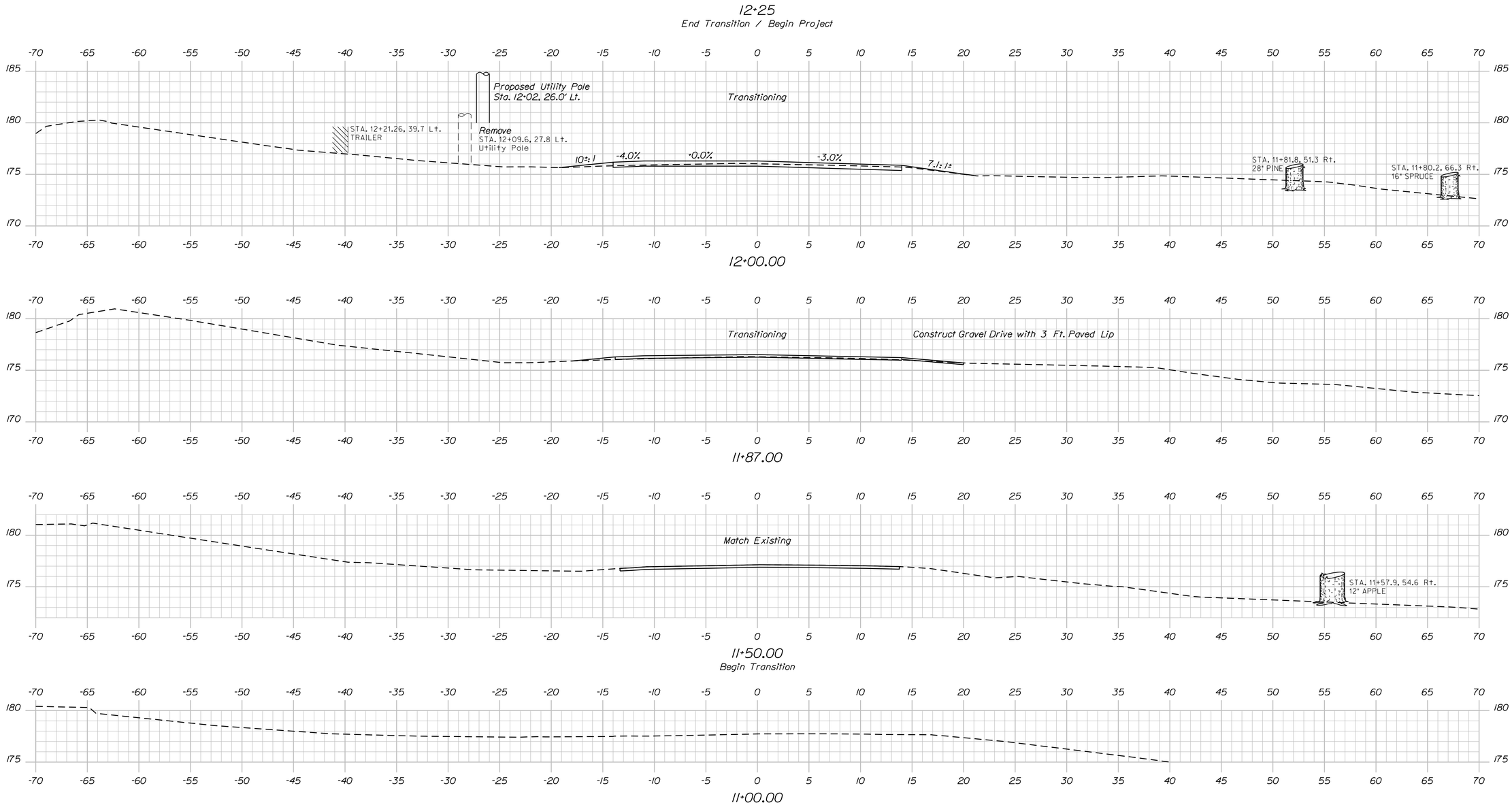

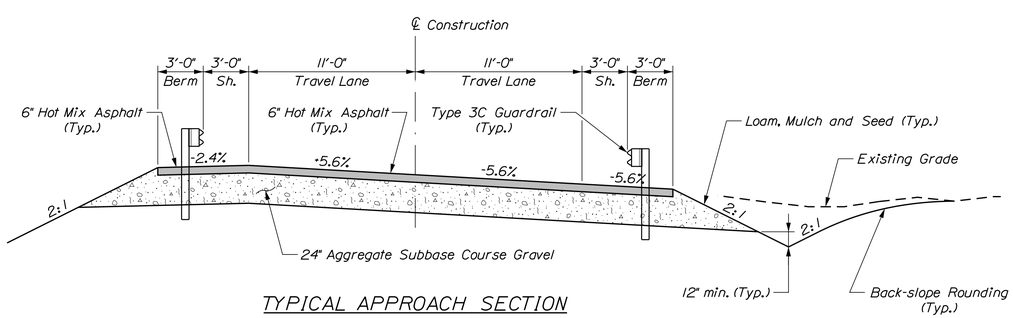

TYPICAL APPROACH SECTION
Full Superelevation with Guardrail

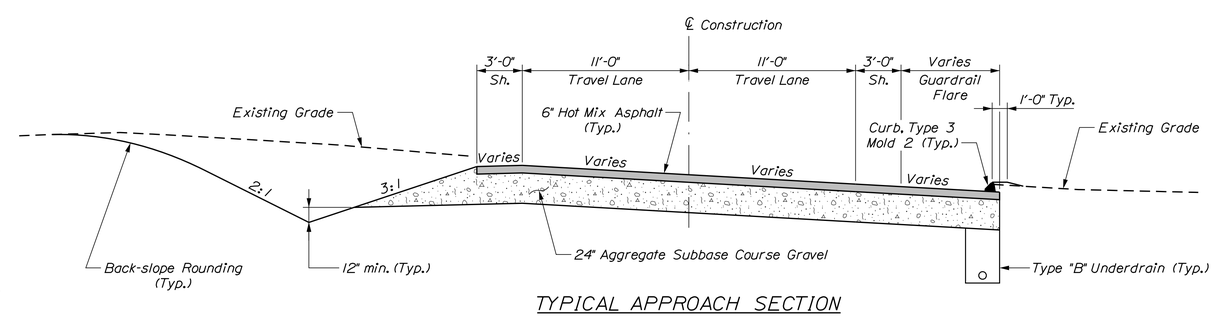

TYPICAL APPROACH SECTION
Without Guardrail and with Underdrain

STATE OF MAINE
DEPARTMENT OF TRANSPORTATION

STP-2050(600)

WIN 20506.00

BRIDGE NO. 3736

BRIDGE PLANS

PROJ. MANAGER	A. LATHE	BY	DATE
DESIGN-DETAILED	E.S.B.	D.E.S.	02-03-16
CHECKED-REVIEWED	E.S.B.	B.T.W.	02-03-16
DESIGN2-DETAILED2			
DESIGN3-DETAILED3			
REVISIONS 1			
REVISIONS 2			
REVISIONS 3			
REVISIONS 4			
FIELD CHANGES			

SIGNATURE

P.E. NUMBER

DATE

MEDDYBEMPS BRIDGE
DENNY'S RIVER
MEDDYBEMPS WASHINGTON COUNTY

CROSS SECTIONS

SHEET NUMBER
8
OF 28

Sta. 11+00 to Sta. 12+00

Filename: ...\MSTA\008_XSECT_11+00-12+00.dgn Division: BRIDGE Username: common Date:3/7/2016

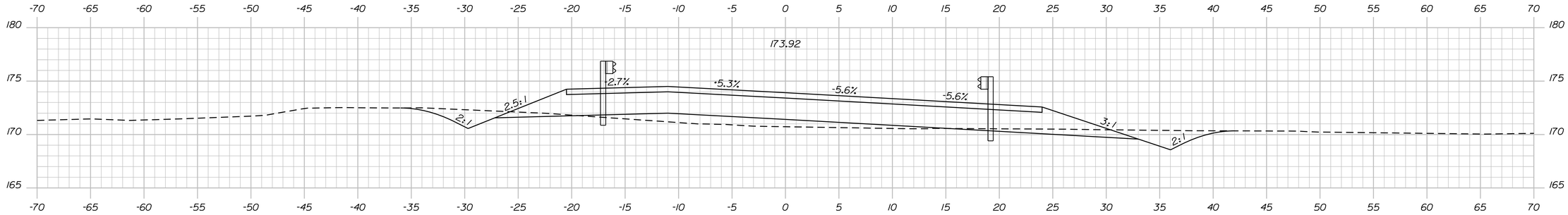

13+41.70

Sta. 13+41.7±, 18.0 Ft. Rt. to Sta. 13+80.1±, 14.0 Ft. Rt.
Install Guardrail 350 Flared Terminal

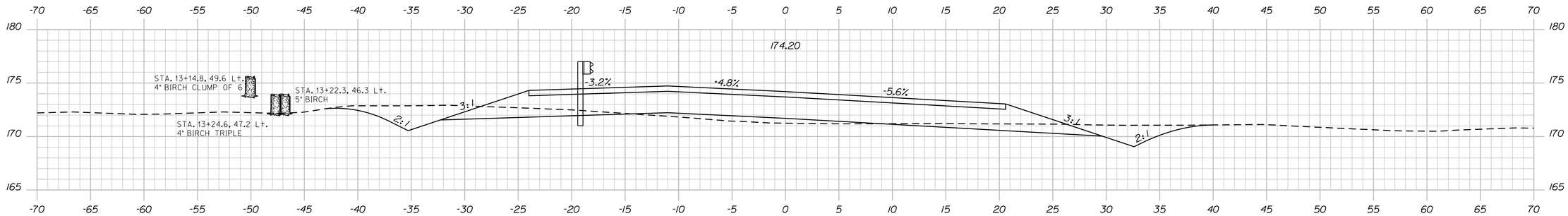

Sta. 13+25.3±, 18.0 Ft. Lt. to Sta. 13+61.5±, 14.0 Ft. Lt.
Install Guardrail 350 Flared Terminal

13+25.00

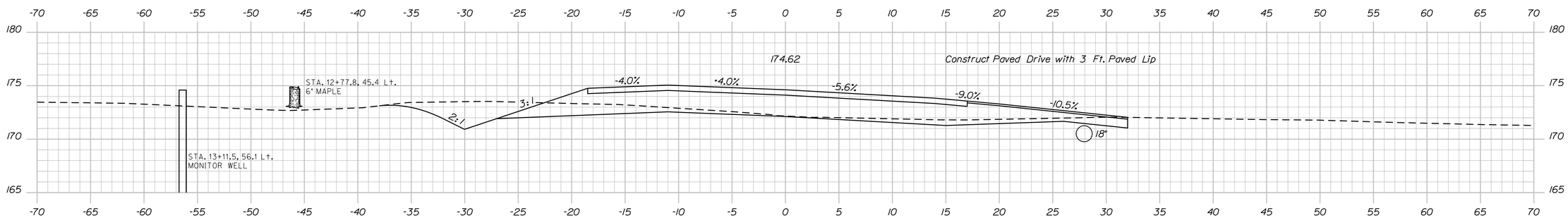

13+00.00

Sta. 12+85.6±, 25.6± Ft. Rt., Invert EL. 170.2 to
Sta. 13+12.6±, 29.7± Ft. Rt., Invert EL. 169.4
Install 18" x 26 L.F. Culvert Pipe Option 1

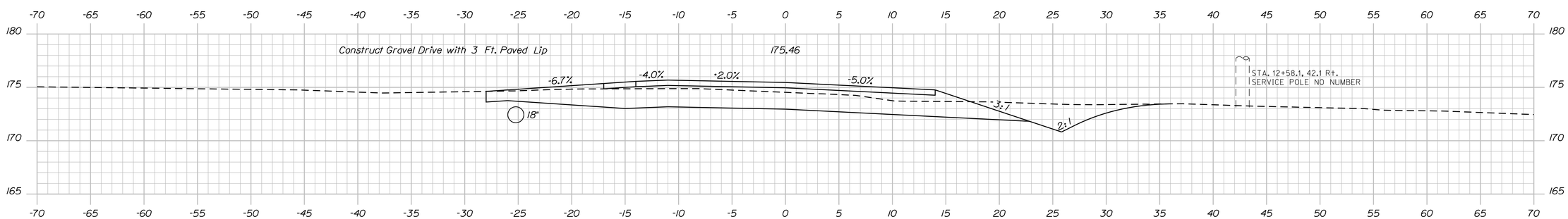

Sta. 12+29.4±, 25.9± Ft. Lt., Invert EL. 171.9 to
Sta. 12+67.6±, 25.3± Ft. Lt., Invert EL. 171.5
Install 18" x 40 L.F. Culvert Pipe Option 1

12+50.00

STATE OF MAINE
DEPARTMENT OF TRANSPORTATION

STP-2050(600)

PIN 20506.00

BRIDGE NO. 3736

BRIDGE PLANS

PROJ. MANAGER			
DESIGN-DETAILED	E.S.B.	D.E.S.	02-03-16
CHECKED-REVIEWED	E.S.B.	B.T.W.	02-03-16
DESIGN2-DETAILED2			
DESIGN3-DETAILED3			
REVISIONS 1			
REVISIONS 2			
REVISIONS 3			
REVISIONS 4			
FIELD CHANGES			

A. LATHE

BY

DATE

SIGNATURE

P.E. NUMBER

DATE

MEDDYBEMPS BRIDGE
DENNY'S RIVER
MEDDYBEMPS WASHINGTON COUNTY

CROSS SECTIONS

SHEET NUMBER

9

OF 28

Sta. 12+50 to Sta. 13+41.7

Filename: ...\009_XSECT_12+50-13+41.7.dgn Division: BRIDGE Username: common Date:3/7/2016

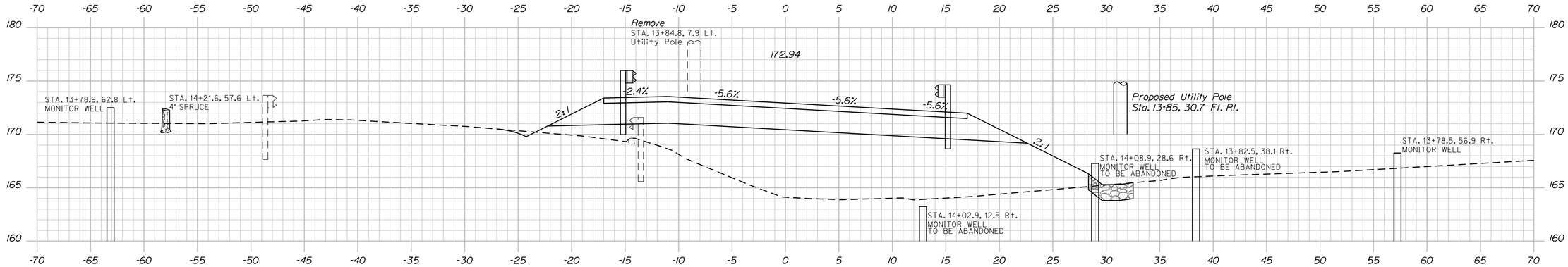

Sta. 13+98.1±, 14.0 Ft. Lt. to end of Bridge Lt.
Install Bridge Transition Type I

14+00.00

Sta. 14+05.8±, 14.0 Ft. Rt. to end of Bridge Rt.
Install Bridge Transition Type I

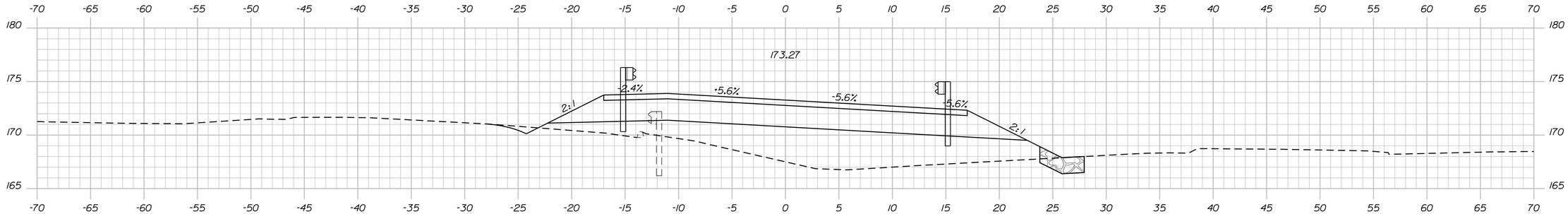

13+80.10

Sta. 13+80.1±, 14.0 Ft. Rt. to Sta. 14+05.8±, 14.0 Ft. Rt.
Install 25 L.F. of Type 3c Guardrail

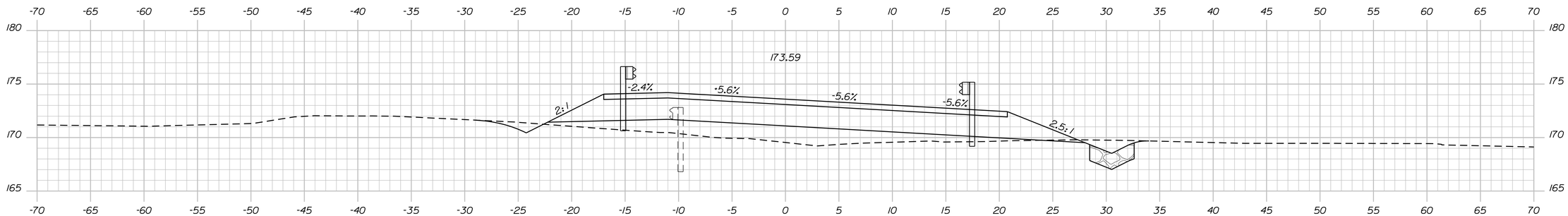

Sta. 13+61.5±, 14.0 Ft. Lt. to Sta. 13+98.1±, 14.0 Ft. Lt.
Install 37.5 L.F. of Type 3c Guardrail

13+61.50

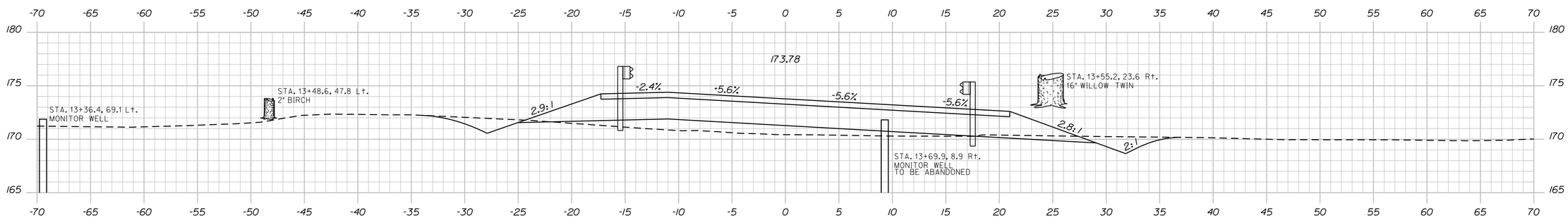

13+50.00

Sta. 13+55.0, 32.4± Ft. Rt. to Sta. 13+80.1, 25.9± Ft. Rt. to
Sta. 14+00±, 30.4± Ft. Rt. to Sta. 14+43.3±, 42.8± Ft. Rt.
Install Stone Ditch Protection (4 Ft. wide)

STATE OF MAINE
DEPARTMENT OF TRANSPORTATION

STP-2050(600)

WIN 20506.00

BRIDGE NO. 3736

BRIDGE PLANS

			BY	DATE
PROJ. MANAGER		A. LATHE		
DESIGN-DETAILED	E.S.B.	E.S.B.	D.E.S.	02-03-16
CHECKED-REVIEWED	E.S.B.	E.S.B.	B.T.W.	02-03-16
DESIGN2-DETAILED2		ALED2		
DESIGN3-DETAILED3		ALED3		
REVISIONS 1				
REVISIONS 2				
REVISIONS 3				
REVISIONS 4				
FIELD CHANGES				

SIGNATURE

P.E. NUMBER

DATE

MEDDYBEMPS BRIDGE
DENNY'S RIVER
MEDDYBEMPS WASHINGTON COUNTY

CROSS SECTIONS

SHEET NUMBER

10

OF 28

Sta. 13+50 to Sta. 14+00

Filename: ...\MSTA\010_XSECT_13+50-14+00.dgn Division: BRIDGE Username: common Date:3/7/2016

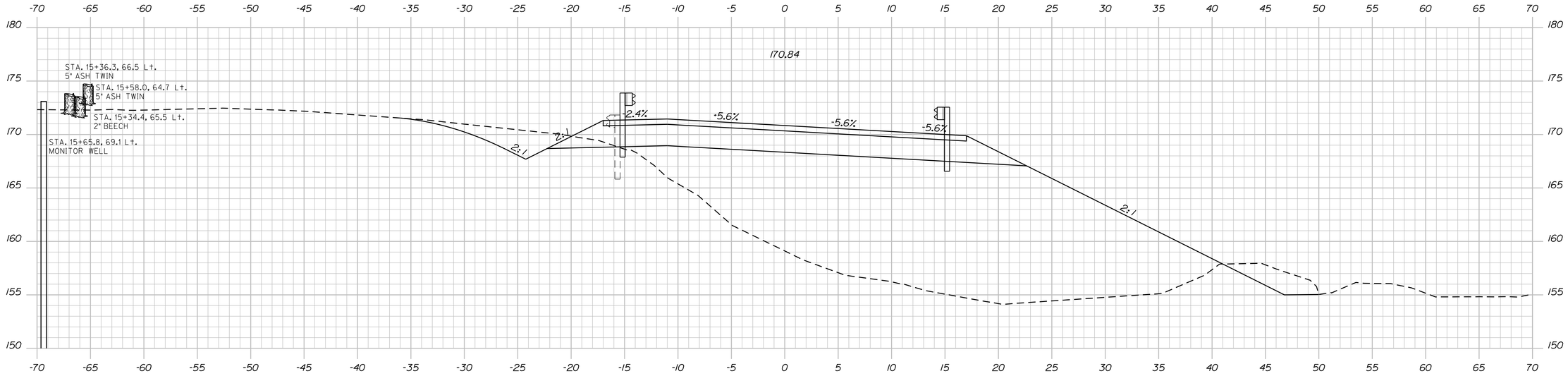

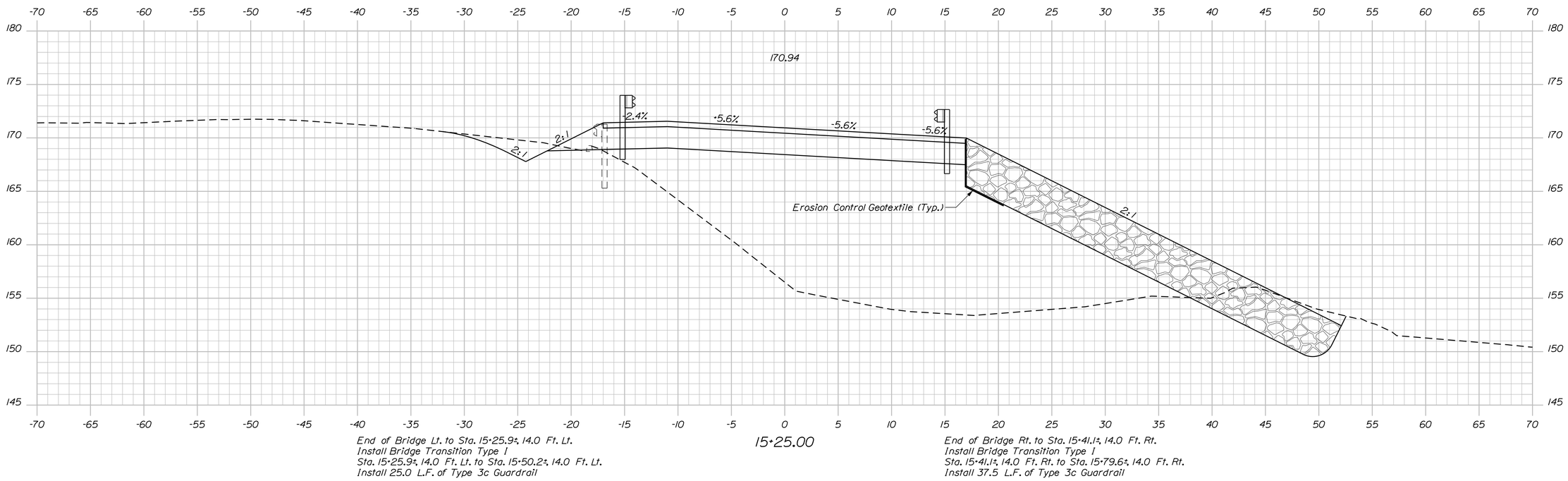

BRIDGE

STATE OF MAINE
DEPARTMENT OF TRANSPORTATION

STP-2050(600)

WIN 20506.00

BRIDGE NO. 3736

BRIDGE PLANS

SIGNATURE

P.E. NUMBER

DATE

PROJ. MANAGER	A. LATHE	BY	DATE
DESIGN-DETAILED	E.S.B.	D.E.S.	02-03-16
CHECKED-REVIEWED	E.S.B.	B.T.W.	02-03-16
DESIGN2-DETAILED2			
DESIGN3-DETAILED3			
REVISIONS 1			
REVISIONS 2			
REVISIONS 3			
REVISIONS 4			
FIELD CHANGES			

MEDDYBEMPS BRIDGE
DENNY'S RIVER
MEDDYBEMPS WASHINGTON COUNTY

CROSS SECTIONS

SHEET NUMBER

11

OF 28

Sta. 15+25 to Sta. 15+50

Filename: ...\MSTA\011_XSECT_15+25-15+50.dgn Division: BRIDGE Username: common Date:3/7/2016

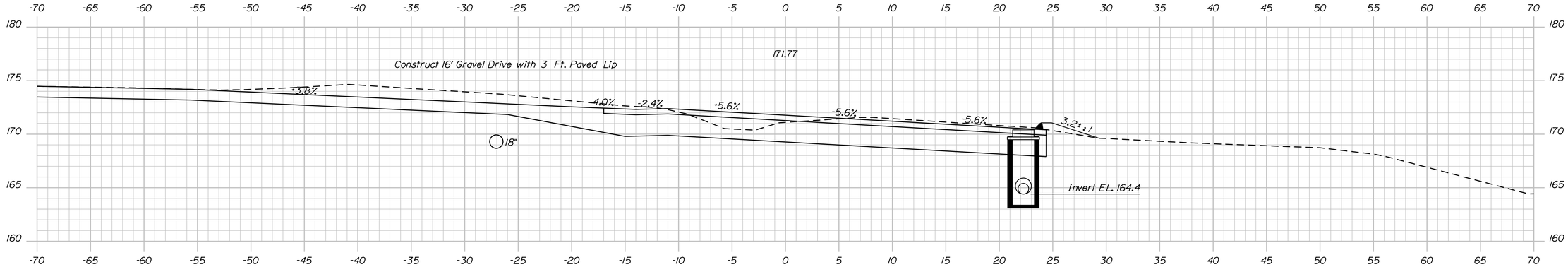

16+25.00

Sta. 16+25.0, 22.2±Ft.Rt.
Install Catch Basin Type F7-C
Rim EL. 170.4.
Invert In 12" UD EL. 164.4
Invert Out 18" EL. 164.4

Sta. 16+18.0±, 24.0 Ft. Rt. to Sta. 16+74.7±, 16.7± Ft. Rt.
Install 55.0 L.F. of Curb, Type 3, Mold 2

Catch Basin Sta. 16+25 Rt. to Catch Basin Sta. 17+55 Rt.
Install 126 L.F. of Type C Underdrain

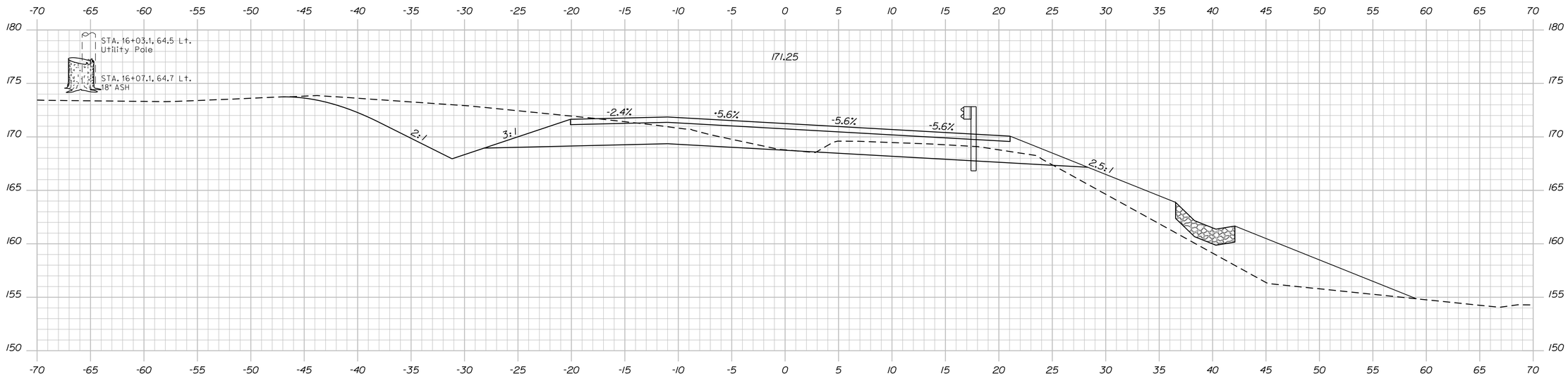

Sta. 16+03.4±, 30.2± Ft. Lt., Invert EL. 168.1 to
Sta. 16+43.1±, 25.1± Ft. Lt., Invert EL. 169.2
Install 18" x 42 L.F. Culvert Pipe Option I

16+00.00

Sta. 16+05.5±, 34.4± Ft. Rt., Invert EL. 163.8± to
Sta. 16+16.8±, 23.7± Ft. Rt. to Catch Basin Sta. 16+25 Rt.
Install 18" x 22 L.F. Culvert Pipe Option III with elbow (+3 L.F.)

Sta. 15+83.0±, 53.8± Ft. Rt. to Sta. 16+16.7±, 23.8± Ft. Rt.
Install Stone Ditch Protection (4' wide)

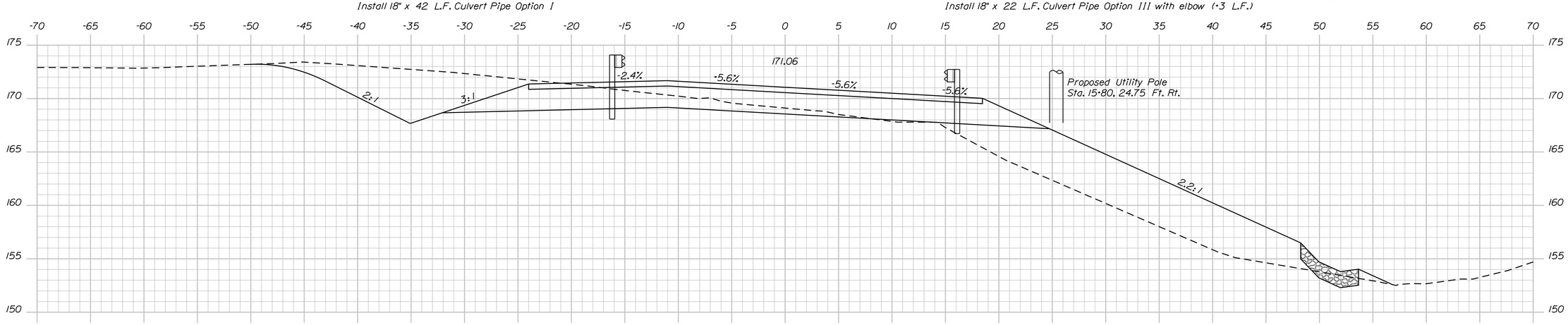

15+86.50

Sta. 15+83.0±, 53.8± Ft. Rt. (9 Ft. wide) to
Sta. 15+76.7±, 59.4± Ft. Rt. (10 Ft. wide)
Install Riprap pad

STATE OF MAINE
DEPARTMENT OF TRANSPORTATION

STP-2050(600)

WIN 20506.00

BRIDGE NO. 3736

BRIDGE PLANS

		BY	DATE
PROJ. MANAGER	A. LATHE		
DESIGN-DETAILED	E.S.B.	D.E.S.	02-03-16
CHECKED-REVIEWED	E.S.B.	B.T.W.	02-03-16
DESIGN2-DETAILED2			
DESIGN3-DETAILED3			
REVISIONS 1			
REVISIONS 2			
REVISIONS 3			
REVISIONS 4			
FIELD CHANGES			

SIGNATURE

P.E. NUMBER

DATE

MEDDYBEMPS BRIDGE
DENNY'S RIVER
MEDDYBEMPS WASHINGTON COUNTY

CROSS SECTIONS

SHEET NUMBER

12

OF 28

Filename: ...\012_XSECT_15+86.5-16+25.dgn Division: BRIDGE Username: common Date:3/7/2016

Sta. 15+86.5 to Sta. 16+25

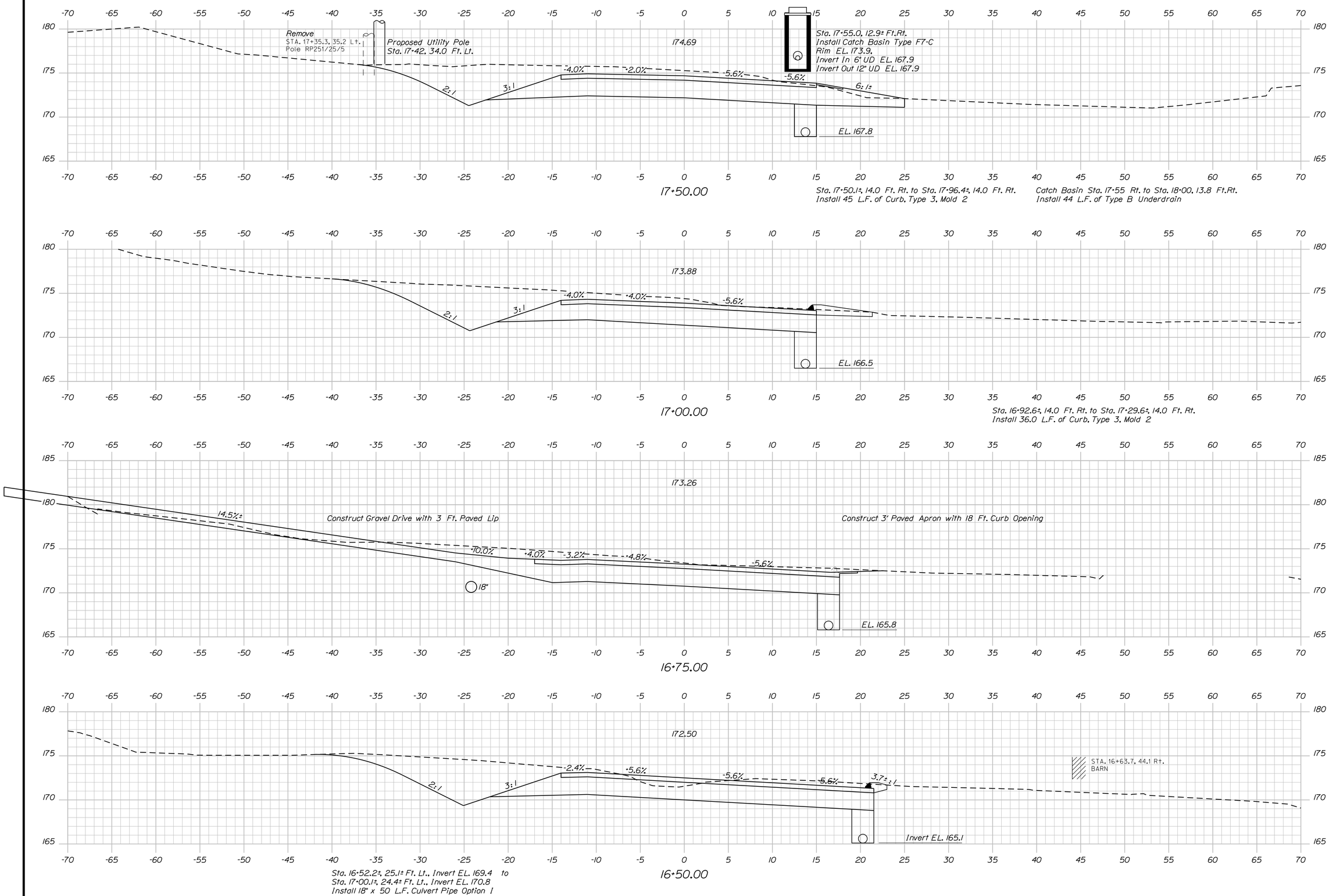

STATE OF MAINE
DEPARTMENT OF TRANSPORTATION

STP-2050(600)

WIN 20506.00

BRIDGE NO. 3736

BRIDGE PLANS

		BY	DATE
PROJ. MANAGER	A. LATHE		
DESIGN-DETAILED	E.S.B.	D.E.S.	02-03-16
CHECKED-REVIEWED	E.S.B.	B.T.W.	02-03-16
DESIGN2-DETAILED2			
DESIGN3-DETAILED3			
REVISIONS 1			
REVISIONS 2			
REVISIONS 3			
REVISIONS 4			
FIELD CHANGES			

SIGNATURE

P.E. NUMBER

DATE

MEDDYBEMPS BRIDGE
DENNY'S RIVER
MEDDYBEMPS WASHINGTON COUNTY

CROSS SECTIONS

SHEET NUMBER

13

OF 28

Filename: ...\MSTA\013_XSECT_16+50-17+50.dgn Division: BRIDGE Username: common Date:3/7/2016

Sta. 16+50 to Sta. 17+50

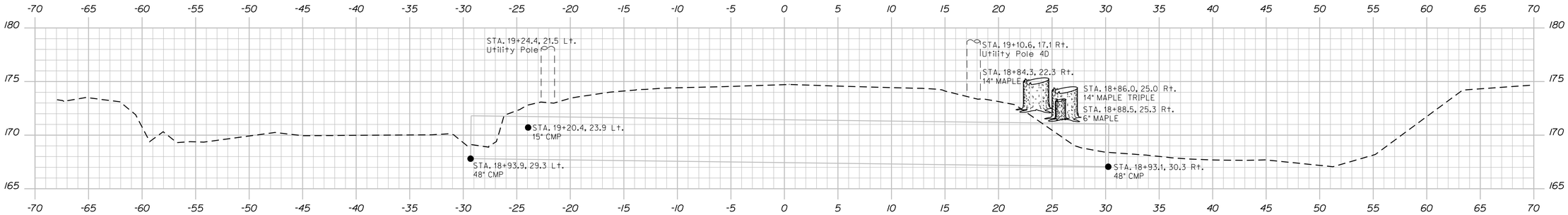

19+00.00

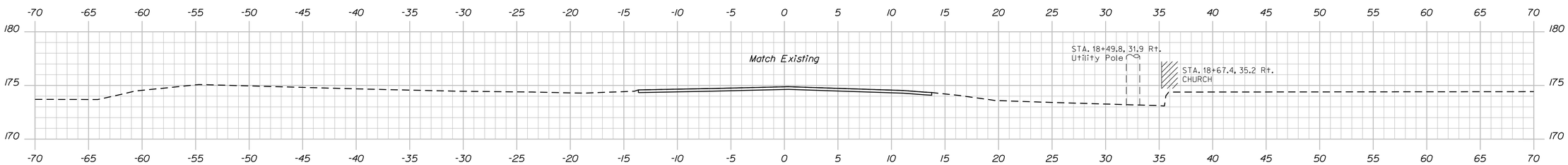

18+50.00

End Transition

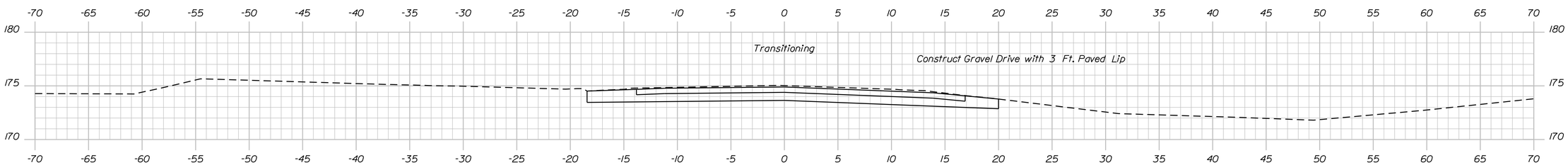

18+25.00

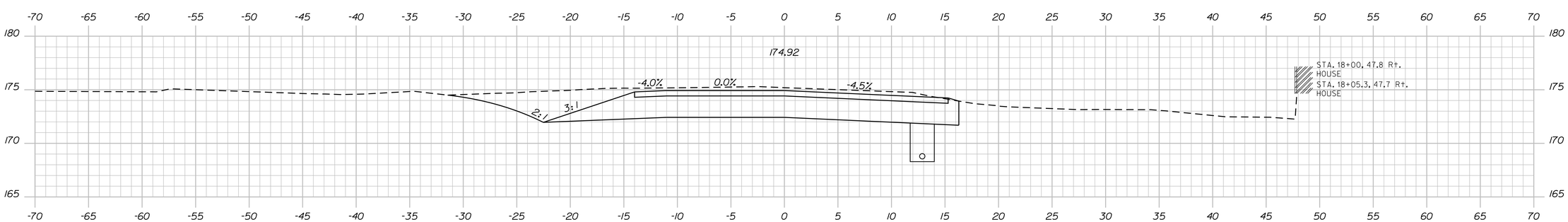

18+00.00

End Project / Begin Transition

STATE OF MAINE
DEPARTMENT OF TRANSPORTATION

STP-2050(600)

PIN 20506.00

BRIDGE NO. 3736

BRIDGE PLANS

PROJ. MANAGER	A. LATHE	BY	DATE
DESIGN-DETAILED	E.S.B.	D.E.S.	02-03-16
CHECKED-REVIEWED	E.S.B.	B.T.W.	02-03-16
DESIGN2-DETAILED2			
DESIGN3-DETAILED3			
REVISIONS 1			
REVISIONS 2			
REVISIONS 3			
REVISIONS 4			
FIELD CHANGES			

SIGNATURE

P.E. NUMBER

DATE

MEDDYBEMPS BRIDGE
DENNY'S RIVER
MEDDYBEMPS WASHINGTON COUNTY

CROSS SECTIONS

SHEET NUMBER

14

OF 28

Filename: ...\MSTA\014_XSECT_18+00-19+00.dgn Division: BRIDGE Username: common Date:3/7/2016

Sta. 18+00 to Sta. 19+00

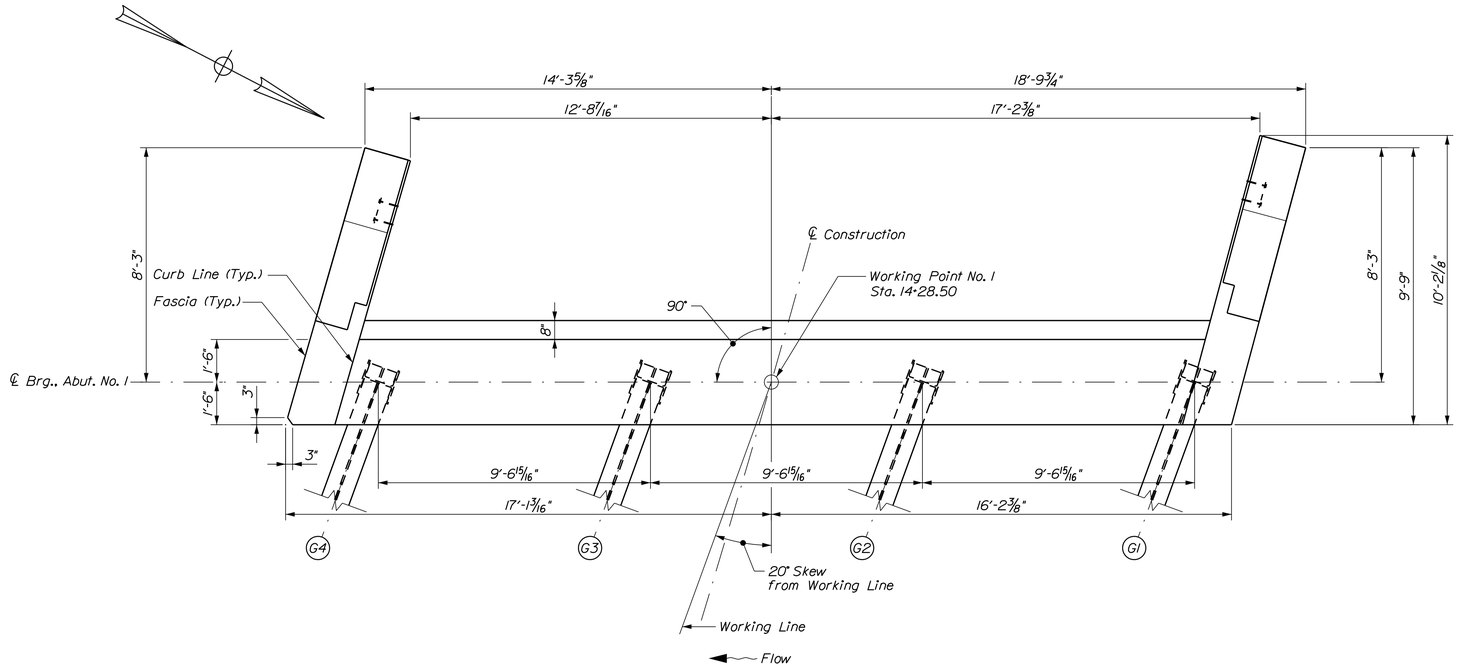

ABUTMENT NO. 1 PLAN

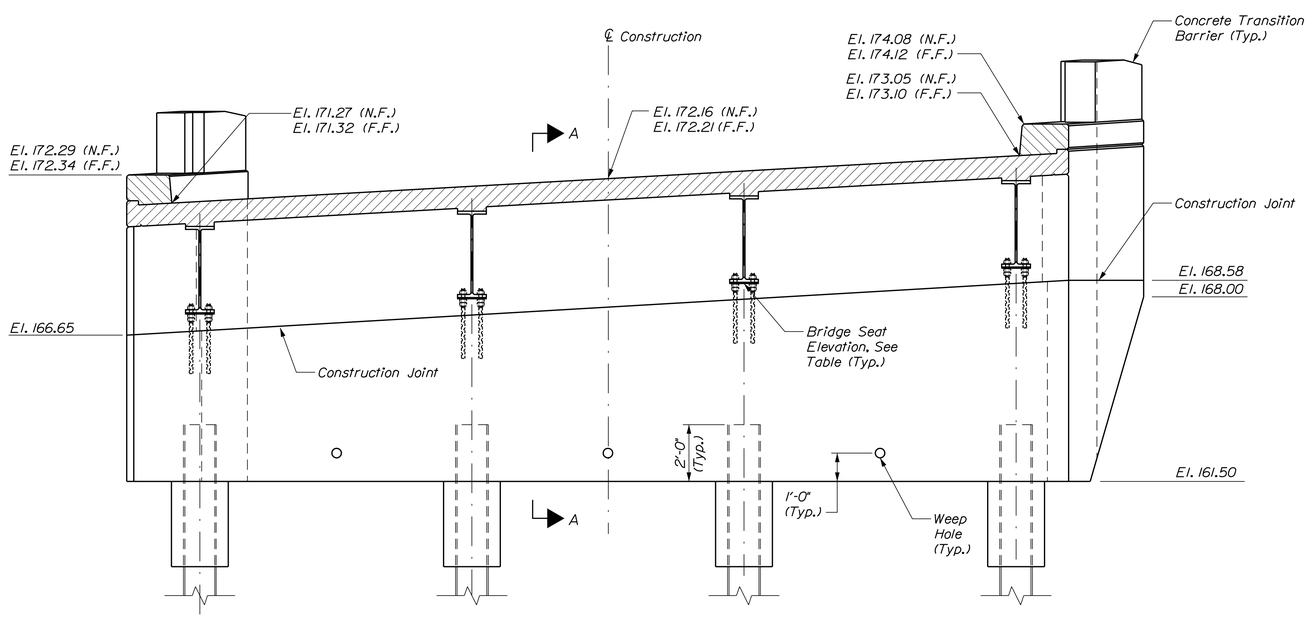

ABUTMENT NO. 1 ELEVATION

ABUTMENT NOTES

1. Structural Earth Excavation, Abutments and Retaining Walls, required more than 12 inches below the bottom of the structure, will be paid for in accordance with Standard Specifications Section 206, Structural Excavation.

2. Reinforcing steel shall have a minimum concrete cover of 2 inches unless otherwise noted.

3. The Contractor shall install Transition Barrier vertical closed stirrups as shown in Standard Details Section 526, prior to the placement of the curb concrete.

4. Cover joints where waterstops are not required in accordance with Standard Details Section 502(01).

5. Abutments and wingwalls shall be backfilled with Granular Borrow. Pay limits will be in accordance with Section A-A on Abutment No. 2 Plan and Elevation sheet.

6. Excavate 24-inch diameter by 36-inch deep hole around the centroid of each pile. The depth is measured from the bottom of the abutment.

7. Payment for the concrete jacket around the tops of the H-Piles will not be paid for directly, but will be considered incidental to related pay items. Fill concrete shall be used for the concrete jackets.

8. Place 4" diameter drains in abutment at 10'-0" maximum spacing. The exact location will be determined by the Resident.

9. Contractor shall survey anchor bolt locations and adjust reinforcing steel per Resident to avoid interferences prior to concrete placement.

PILE NOTES

1. The maximum factored pile load is 319 kips for Strength 1 load combination.

2. Estimate of piles required:

   Abutment No. 1: 4-HP14x89 @ 18 feet
   Abutment No. 2: 4-HP14x89 @ 15 feet

   The order lengths at Abutment No. 2 shall include an additional 5 feet of length for each test pile to accomodate dynamic pile testing equipment. The cost will be incidental to related contract items.

3. H-pile material shall be ASTM A572/A572M, Grade 50.

4. Piles shall not be out of position shown by more than 2 inches in any direction.

5. Piles at Abutment No. 1 shall be placed in accordance with Special Provision Section 501 (Rock-Socketed H-Pile Foundation) of the contract documents.

6. Piles at Abutment No. 2 shall be driven to the required nominal resistance on or within bedrock in accordance with Section 501 of the Standard Specifications.

7. All piles at Abutment No. 2 shall be equipped with a rock injector pile tip in accordance with Special Provisions Section 501, Rock Injector Pile Tip.

8. The Contractor shall perform (1) dynamic load test at Abutment No. 2 to confirm the ultimate capacity of the piles. The required nominal resistance for the pile is the factored axial pile load divided by a resistance factor of 0.65 per LRFD Specifications. The dynamic test shall be performed on the first production pile driven at each abutment.

9. The Contractor shall perform and submit (1) wave equation analysis, at Abutment No. 2 for review and acceptance by the Resident. The maximum allowable driving stress is 0.90 times Fy. The submittal analyses shall include the proposed stopping criteria based on the wave equation analysis and the proposed driving system. The stopping criteria shall include the blows per inch and the number of 1-in. intervals at which pile installation may be terminated. The cost of performing the wave equation analysis will be considered incidental to Item No. 501.92, Pile Driving Equipment Mobilization.

10. Due to the presence of sloping bedrock at the site, pile walking during driving is possible. Costs for removing and re-driving pile that are out of position will be incidental to related items.

11. Cobbles or boulders may be encountered during pile driving operations. Clearing of obstructions shall be as specified in Section 501 of the Standard Specifications. The method shall be approved by the Resident. The cost of clearing obstructions will be considered incidental to related contract Pay Items.

Bridge Seat Elevations		
Beam	Abut. No. 1	Abut. No. 2
G1	169.14	167.83
G2	168.58	167.28
G3	168.03	166.72
G4	167.47	166.18

Note:
Bridge seat elevations provided at bottom of steel beam along centerline bearings.

BECKER
STRUCTURAL ENGINEERS
75 York Street, Portland, Maine 04101
207.879.1838 ■ beckerstructural.com

STATE OF MAINE
DEPARTMENT OF TRANSPORTATION

STP-2050(600)

WIN 20506.00

BRIDGE NO. 3736

BRIDGE PLANS

PROJ. MANAGER	A. LATHE		
DESIGN-DETAILED	E.BROWNELL	D.BURGESS	02-03-16
CHECKED-REVIEWED	E.BROWNELL	D.BURGESS	02-03-16
DESIGN2-DETAILED2			
DESIGN3-DETAILED3			
REVISIONS 1			
REVISIONS 2			
REVISIONS 3			
REVISIONS 4			
FIELD CHANGES			

SIGNATURE

P.E. NUMBER

DATE

MEDDYBEMPS BRIDGE
DENNY'S RIVER
MEDDYBEMPS WASHINGTON COUNTY

ABUTMENT NO. 1
PLAN & ELEVATION

SHEET NUMBER
15
OF 28

Filename: ...\MSTA\015_Abutment_No1.dgn Division: BRIDGE Username: common Date:3/7/2016

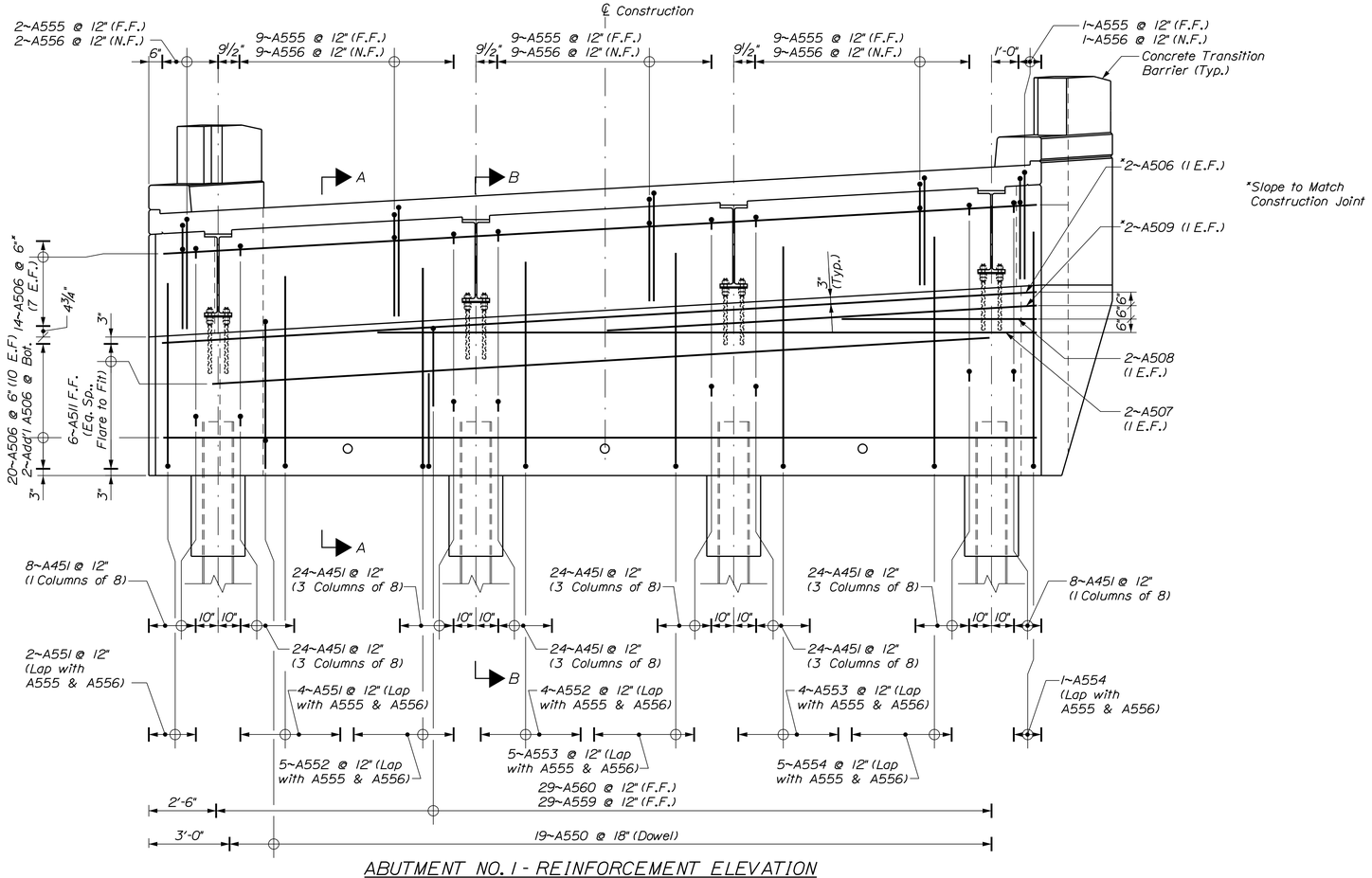

ABUTMENT NO. 1 - REINFORCEMENT ELEVATION

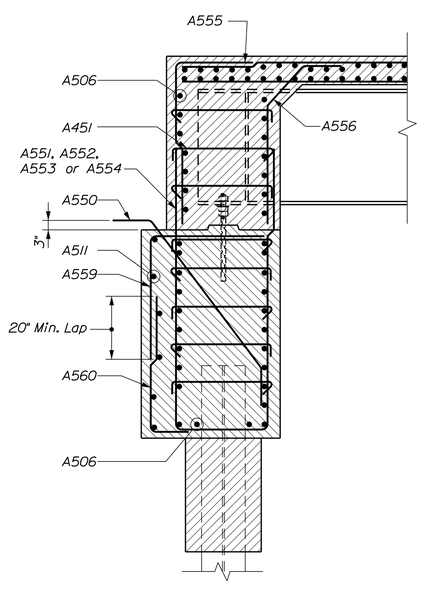

SECTION A-A
(Between Piles)

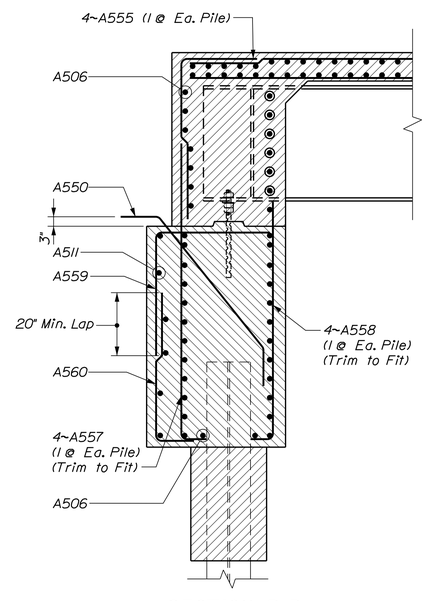

SECTION B-B
(At Piles)

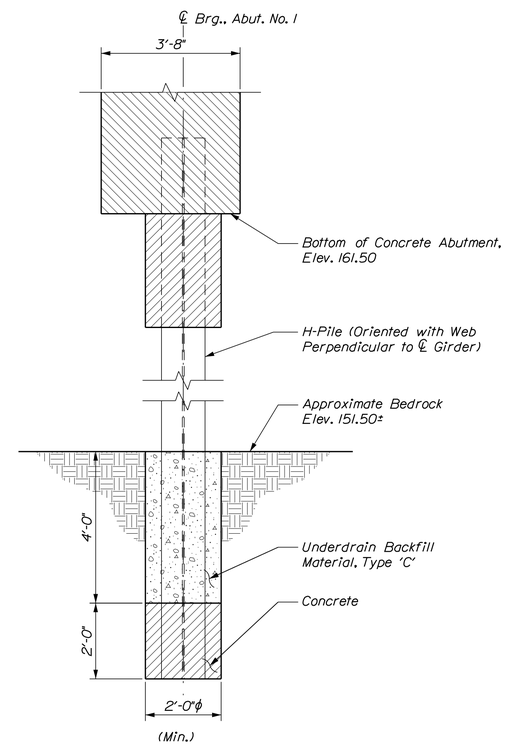

ABUTMENT NO. 1 SOCKET DETAIL

BECKER STRUCTURAL ENGINEERS
75 York Street, Portland, Maine 04101
207.879.1838 ■ beckerstructural.com

STATE OF MAINE
DEPARTMENT OF TRANSPORTATION

STP-2050(600)

WIN 20506.00

BRIDGE NO. 3736

BRIDGE PLANS

PROJ. MANAGER	A. LATHE		
DESIGN-DETAILED	E.BROWNELL	D.BURGESS	02-03-16
CHECKED-REVIEWED	E.BROWNELL	D.BURGESS	02-03-16
DESIGN2-DETAILED2			
DESIGN3-DETAILED3			
REVISIONS 1			
REVISIONS 2			
REVISIONS 3			
REVISIONS 4			
FIELD CHANGES			

SIGNATURE

P.E. NUMBER

DATE

MEDDYBEMPS BRIDGE
DENNY'S RIVER
MEDDYBEMPS WASHINGTON COUNTY

ABUTMENT NO. 1
REINFORCEMENT

SHEET NUMBER
16
OF 28

Filename: ...\016_Abutment_No1_ Reinf.dgn Division: BRIDGE Username: common Date:3/7/2016

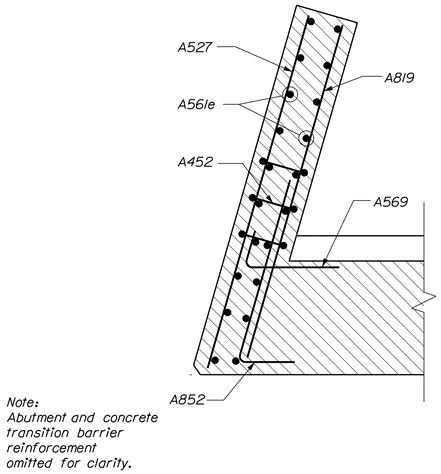

SOUTHWEST WINGWALL PLAN SECTION

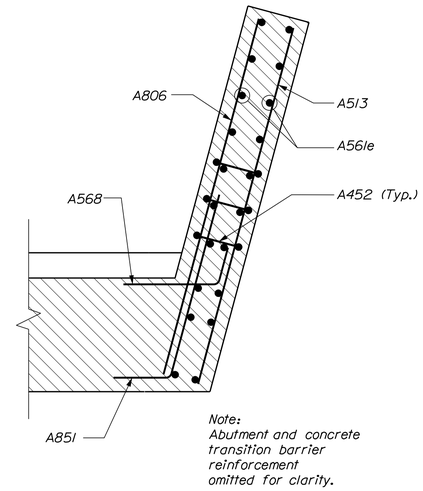

NORTHWEST WINGWALL PLAN SECTION

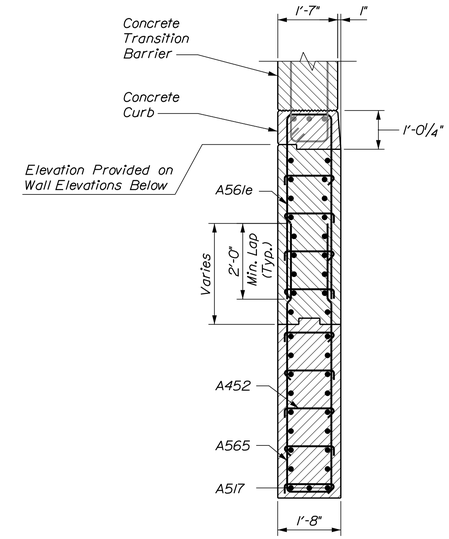

WINGWALL SECTION

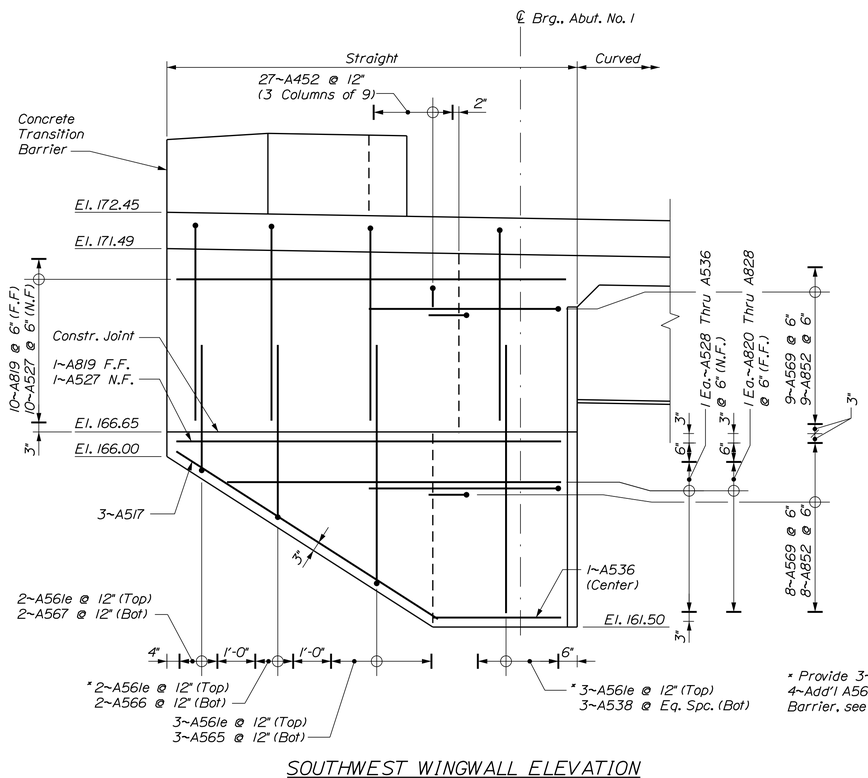

SOUTHWEST WINGWALL ELEVATION

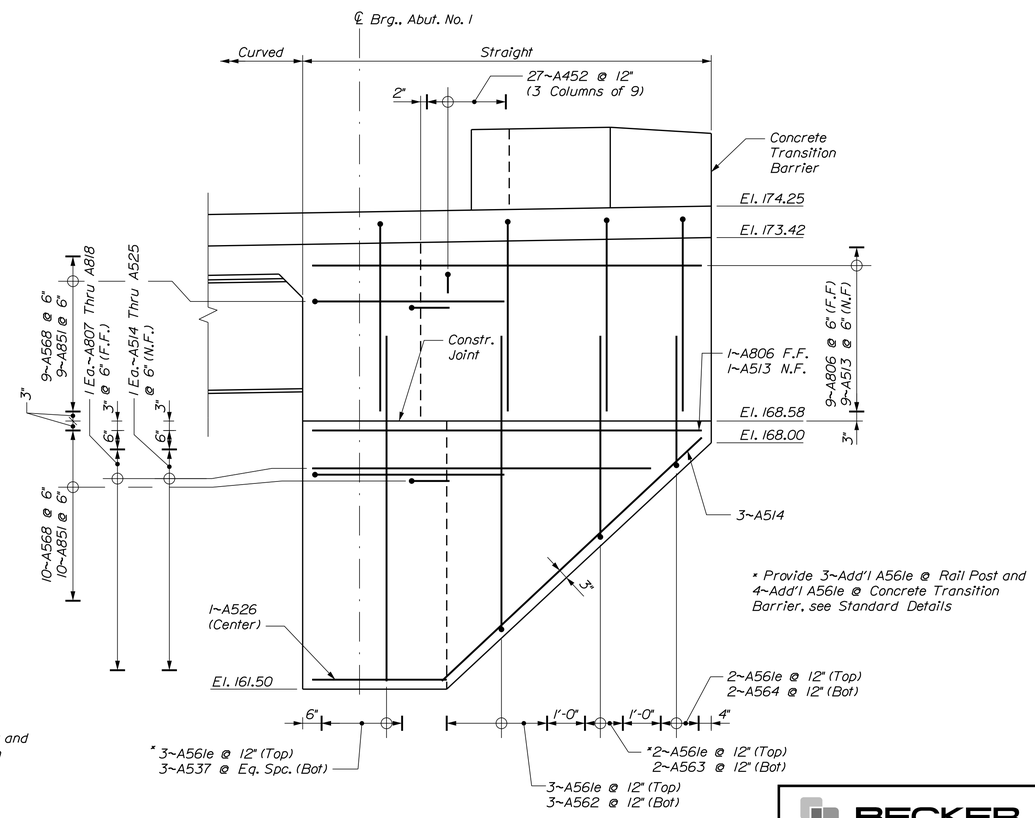

NORTHWEST WINGWALL ELEVATION

BECKER STRUCTURAL ENGINEERS
75 York Street, Portland, Maine 04101
207.879.1838 ■ beckerstructural.com

STATE OF MAINE
DEPARTMENT OF TRANSPORTATION

STP-2050(600)

WIN 20506.00

BRIDGE NO. 3736

BRIDGE PLANS

PROJ. MANAGER	A. LATHE	BY	DATE
DESIGN-DETAILED	E.BROWNELL	D.BURGESS	02-03-16
CHECKED-REVIEWED	E.BROWNELL	D.BURGESS	02-03-16
DESIGN2-DETAILED2			
DESIGN3-DETAILED3			
REVISIONS 1			
REVISIONS 2			
REVISIONS 3			
REVISIONS 4			
FIELD CHANGES			

SIGNATURE

P.E. NUMBER

DATE

MEDDYBEMPS BRIDGE
DENNY'S RIVER
MEDDYBEMPS WASHINGTON COUNTY

ABUTMENT NO. 1
WINGWALL REINFORCEMENT

SHEET NUMBER
17
OF 28

Filename: ...\017_Abutment_No1_WingReinf.dgn Division: BRIDGE Username: common Date:3/7/2016

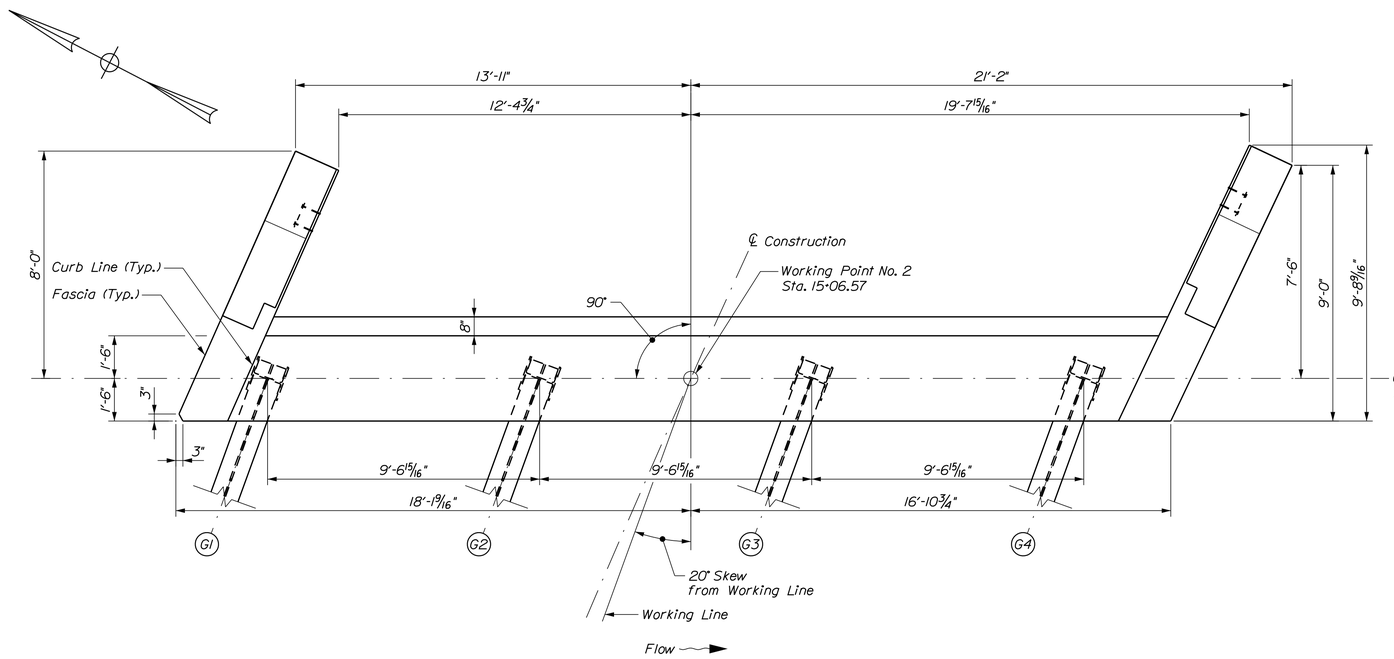

ABUTMENT NO. 2 PLAN

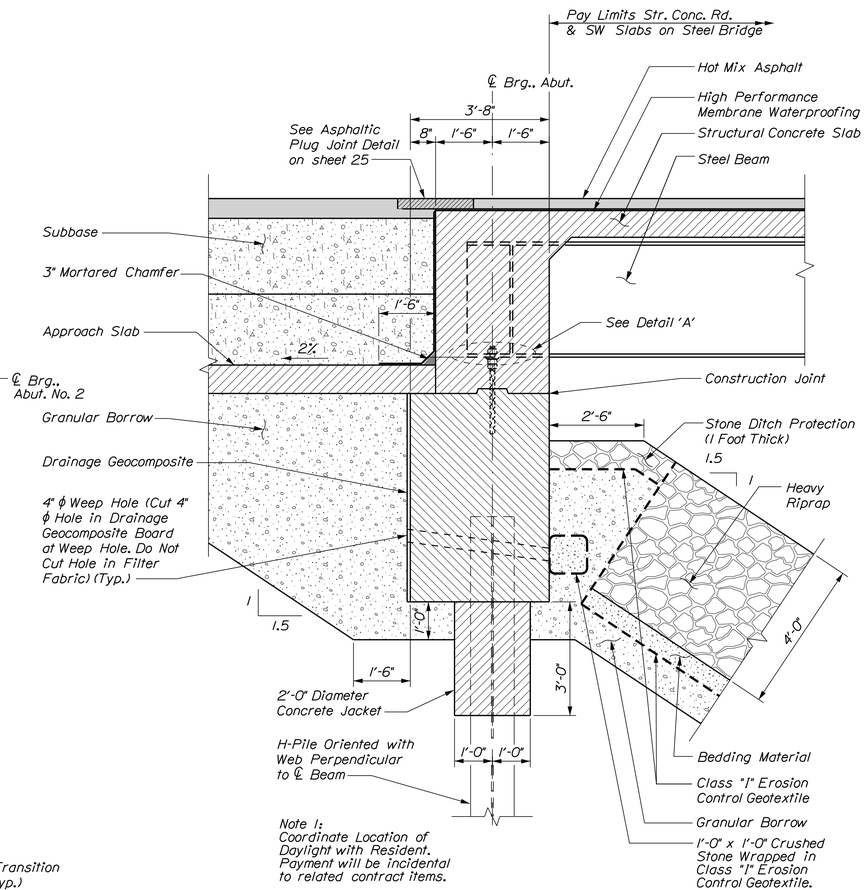

SECTION A-A

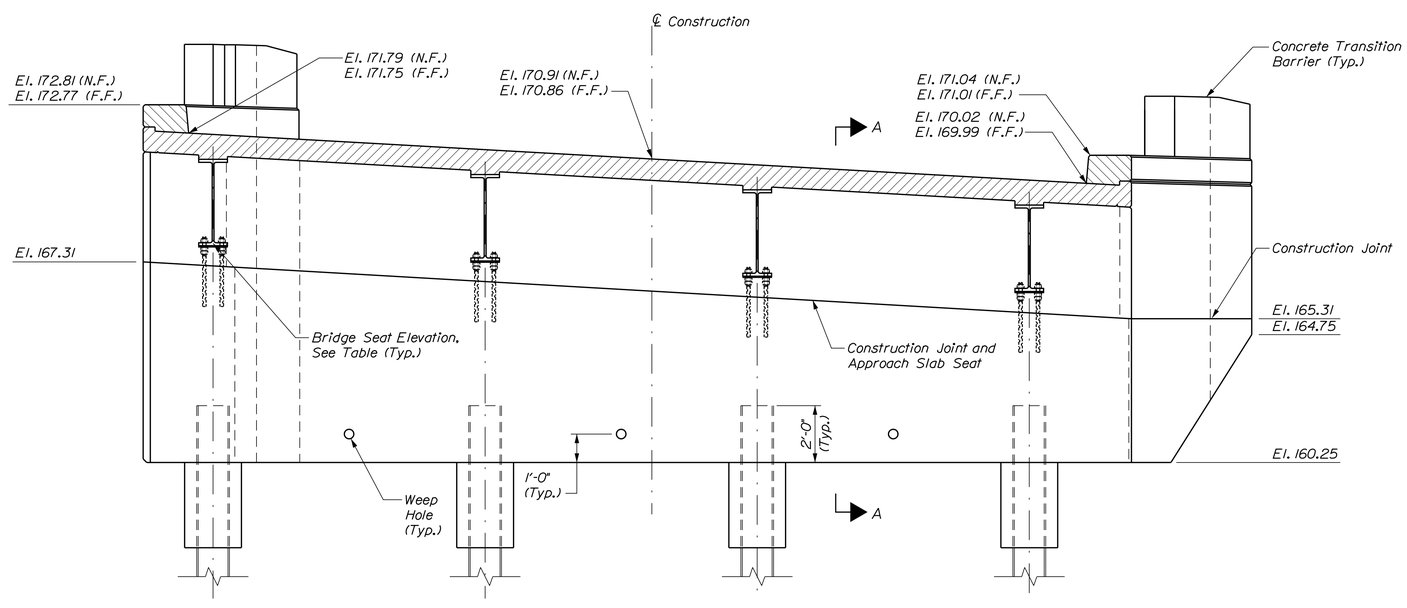

ABUTMENT NO. 2 ELEVATION

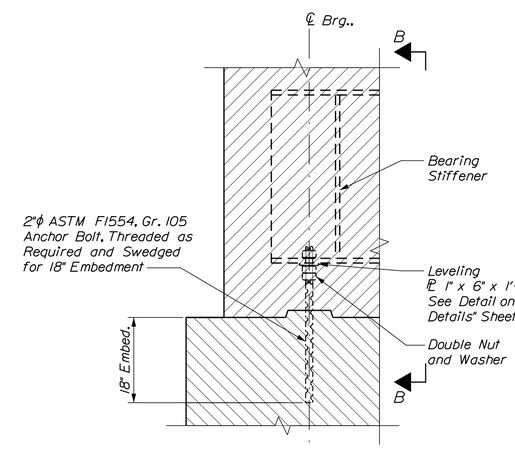

DETAIL 'A'

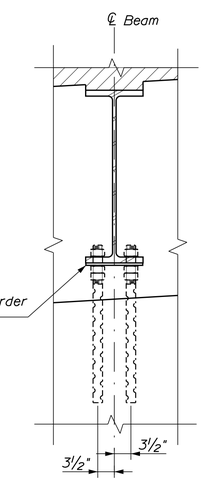

SECTION B-B

Notes:

1. Anchor bolts, nuts, and washers shall be galvanized to ASTM A153 or ASTM B695, Class 50, Type 1.

2. Anchor bolts and leveling plates will not be paid for directly. Payment will be incidental to related contract items.

BECKER
STRUCTURAL ENGINEERS
75 York Street, Portland, Maine 04101
207.879.1838 ■ beckerstructural.com

STATE OF MAINE
DEPARTMENT OF TRANSPORTATION

STP-2050(600)

WIN 20506.00

BRIDGE NO. 3736

BRIDGE PLANS

PROJ. MANAGER	A. LATHE		
DESIGN-DETAILED	E.BROWNELL	D.BURGESS	02-03-16
CHECKED-REVIEWED	E.BROWNELL	D.BURGESS	02-03-16
DESIGN2-DETAILED2			
DESIGN3-DETAILED3			
REVISIONS 1			
REVISIONS 2			
REVISIONS 3			
REVISIONS 4			
FIELD CHANGES			

SIGNATURE

P.E. NUMBER

DATE

MEDDYBEMPS BRIDGE
DENNY'S RIVER
MEDDYBEMPS WASHINGTON COUNTY

ABUTMENT NO. 2
PLAN & ELEVATION

SHEET NUMBER
18
OF 28

Filename: ...\MSTA\018_Abutment_No2.dgn Division: BRIDGE Username: common Date:3/7/2016

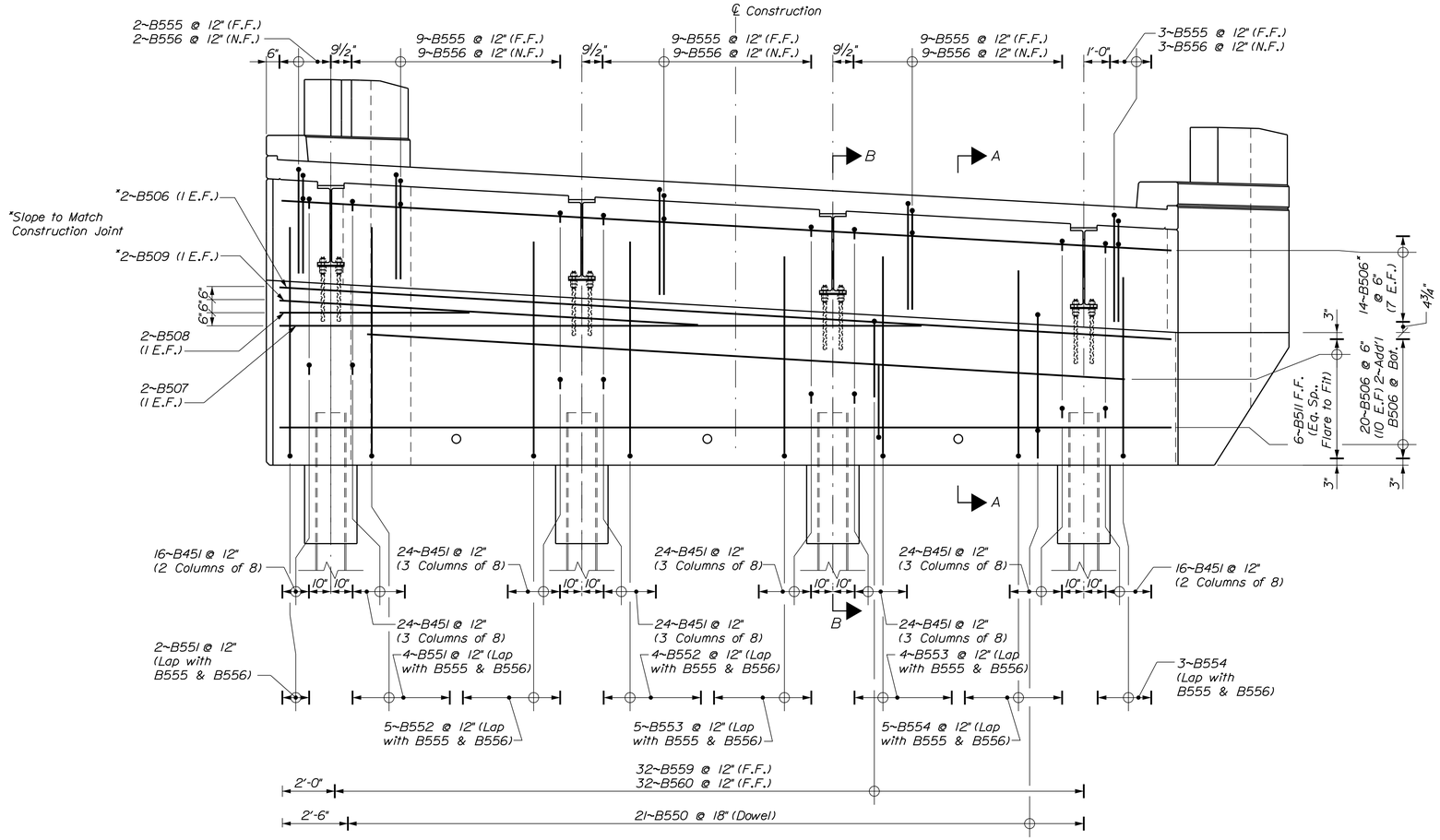

ABUTMENT NO. 2 - REINFORCEMENT ELEVATION

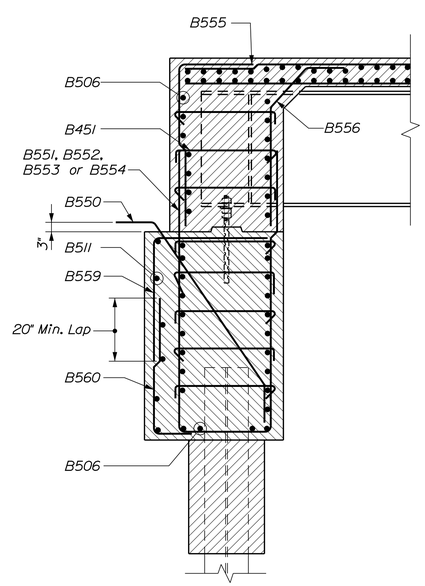

SECTION A-A
(Between Piles)

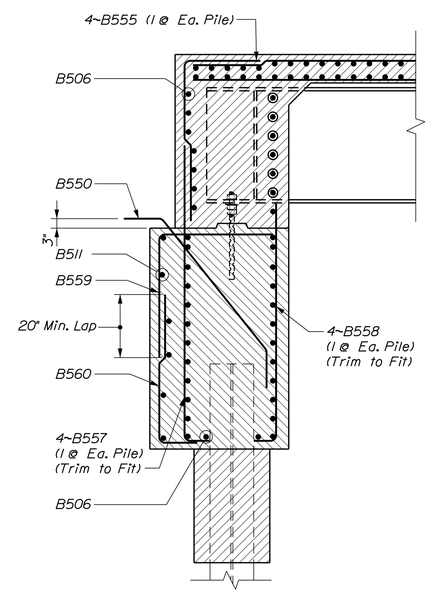

SECTION B-B
(At Piles)

BECKER STRUCTURAL ENGINEERS
75 York Street, Portland, Maine 04101
207.879.1838 ■ beckerstructural.com

STATE OF MAINE
DEPARTMENT OF TRANSPORTATION

STP-2050(600)

WIN 20506.00

BRIDGE NO. 3736

BRIDGE PLANS

PROJ. MANAGER	A. LATHE		
DESIGN-DETAILED	E.BROWNELL	D.BURGESS	02-03-16
CHECKED-REVIEWED	E.BROWNELL	D.BURGESS	02-03-16
DESIGN2-DETAILED2			
DESIGN3-DETAILED3			
REVISIONS 1			
REVISIONS 2			
REVISIONS 3			
REVISIONS 4			
FIELD CHANGES			

SIGNATURE

P.E. NUMBER

DATE

MEDDYBEMPS BRIDGE
DENNY'S RIVER
MEDDYBEMPS WASHINGTON COUNTY

ABUTMENT NO. 2
REINFORCEMENT

SHEET NUMBER
19
OF 28

Filename: ...\019_Abutment_No2_ Reinf.dgn Division: BRIDGE Username: common Date:3/7/2016

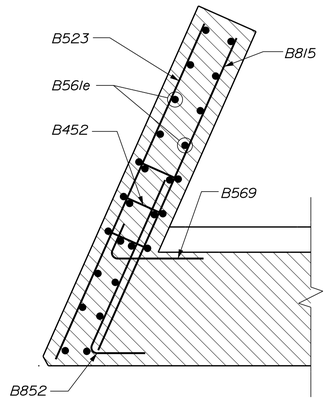

Note:
Abutment and concrete transition barrier reinforcement omitted for clarity.

NORTHEAST WINGWALL PLAN SECTION

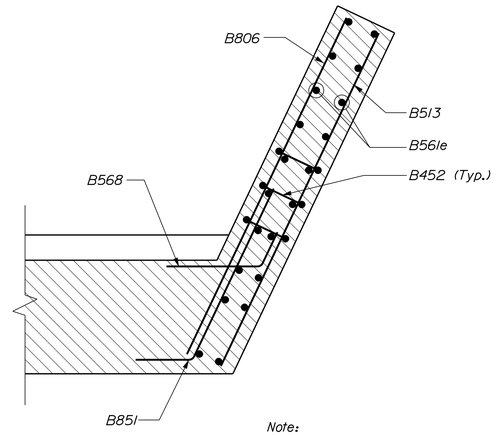

Note:
Abutment and concrete transition barrier reinforcement omitted for clarity.

SOUTHEAST WINGWALL PLAN SECTION

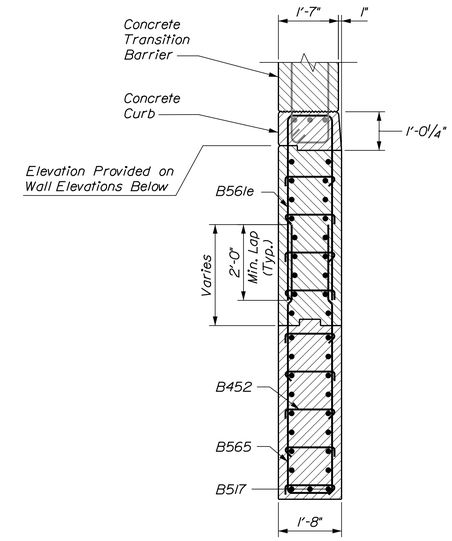

WINGWALL SECTION

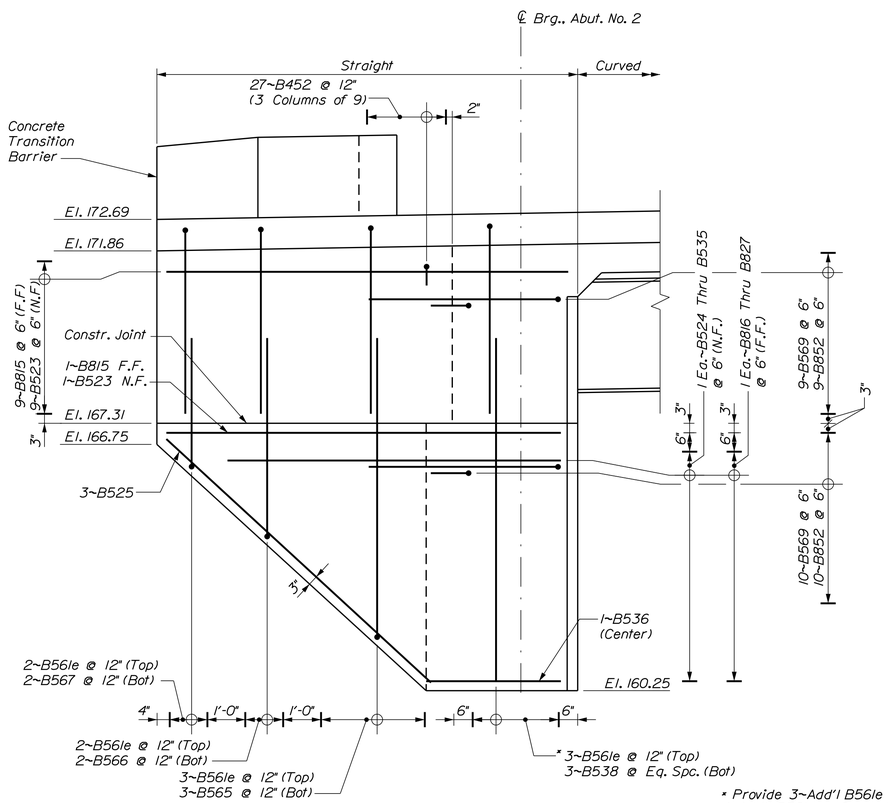

* Provide 3~Add'l B56le @ Rail Post and 4~Add'l B56le @ Concrete Transition Barrier, see Standard Details

NORTHEAST WINGWALL ELEVATION

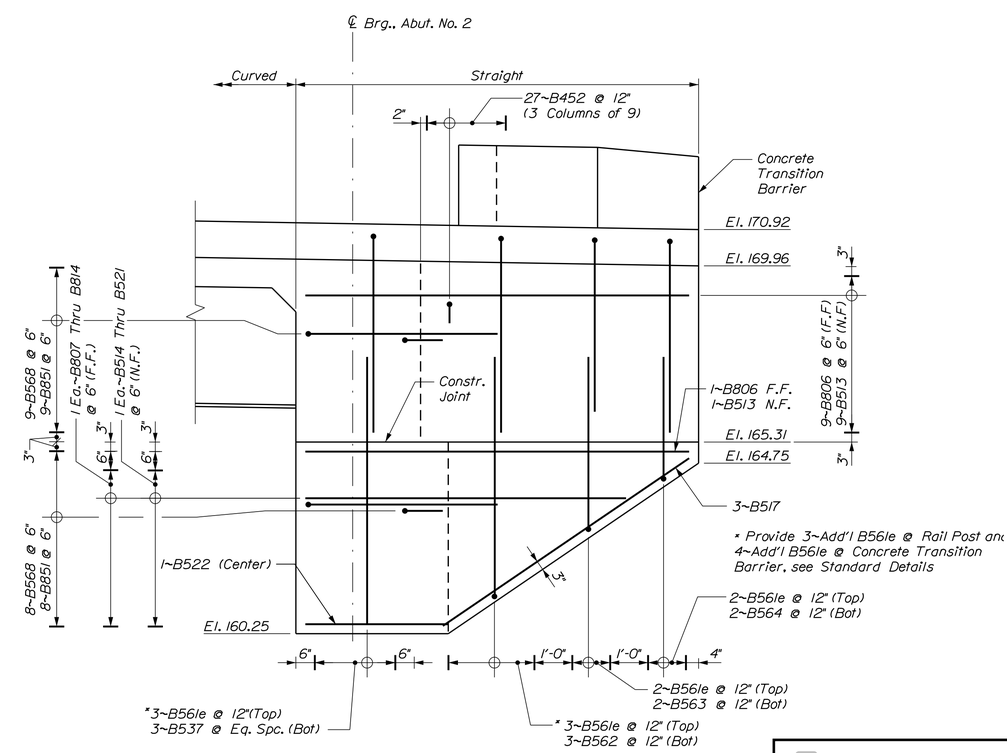

* Provide 3~Add'l B56le @ Rail Post and 4~Add'l B56le @ Concrete Transition Barrier, see Standard Details

SOUTHEAST WINGWALL ELEVATION

BECKER STRUCTURAL ENGINEERS
75 York Street, Portland, Maine 04101
207.879.1838 ■ beckerstructural.com

STATE OF MAINE
DEPARTMENT OF TRANSPORTATION

STP-2050(600)

WIN 20506.00

BRIDGE NO. 3736

BRIDGE PLANS

PROJ. MANAGER	A. LATHE	BY	DATE
DESIGN-DETAILED	E.BROWNELL	D.BURGESS	02-03-16
CHECKED-REVIEWED	E.BROWNELL	D.BURGESS	02-03-16
DESIGN2-DETAILED2			
DESIGN3-DETAILED3			
REVISIONS 1			
REVISIONS 2			
REVISIONS 3			
REVISIONS 4			
FIELD CHANGES			

SIGNATURE

P.E. NUMBER

DATE

MEDDYBEMPS BRIDGE
DENNY'S RIVER
MEDDYBEMPS WASHINGTON COUNTY

ABUTMENT NO. 2
WINGWALL REINFORCEMENT

SHEET NUMBER
20
OF 28

Filename: ...\020_Abutment_No2_WingReinf.dgn Division: BRIDGE Username: common Date:3/7/2016

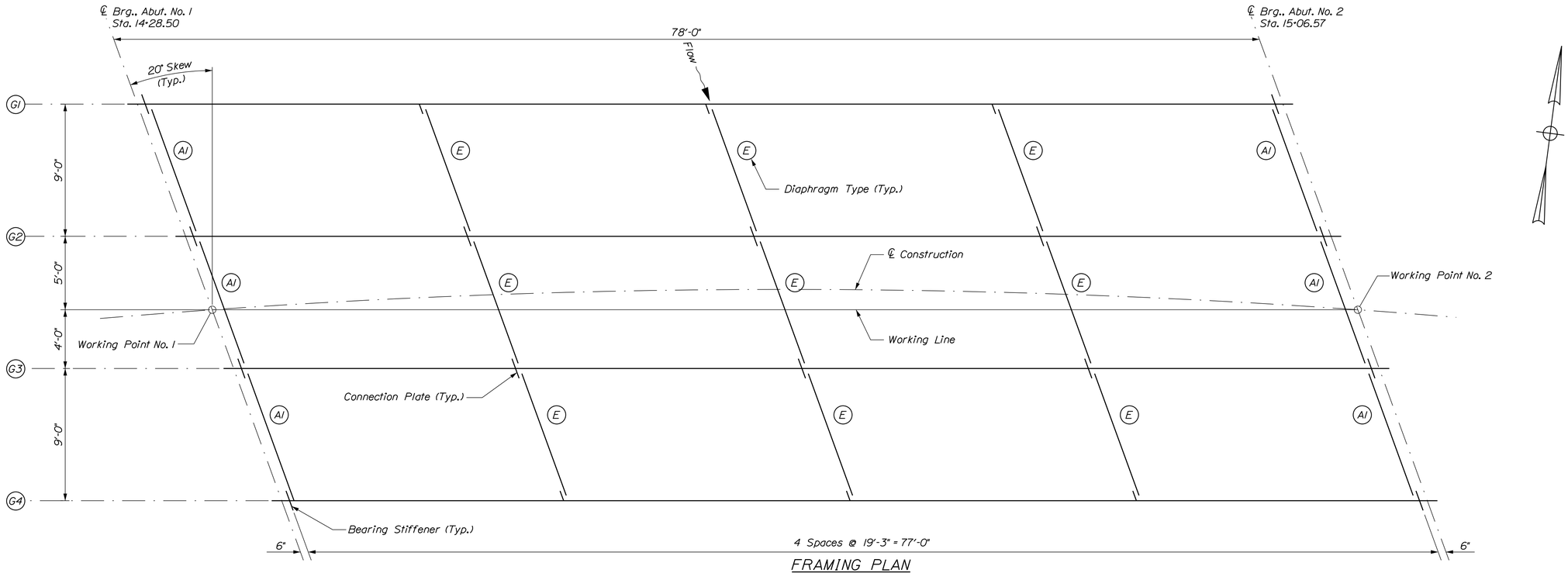

FRAMING PLAN
(Dimensions are Horizontal)

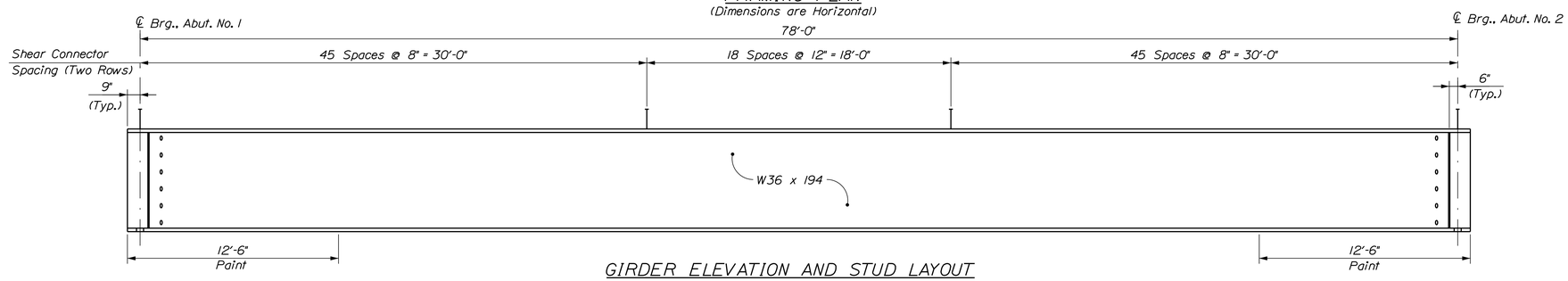

GIRDER ELEVATION AND STUD LAYOUT
(218 Studs per Girder x 4 Girders = 872 Studs)
(Vertical Scale Exaggerated for Clarity)
(Dimensions are Horizontal)

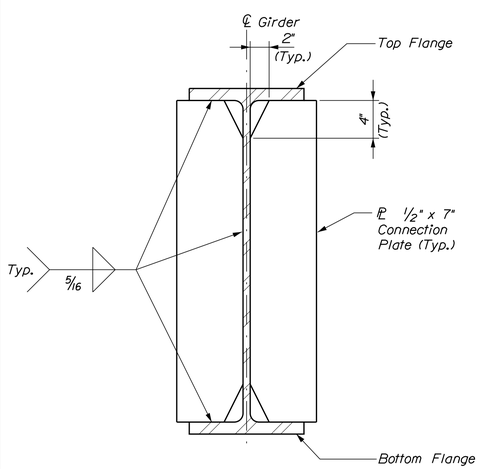

CONNECTION PLATES

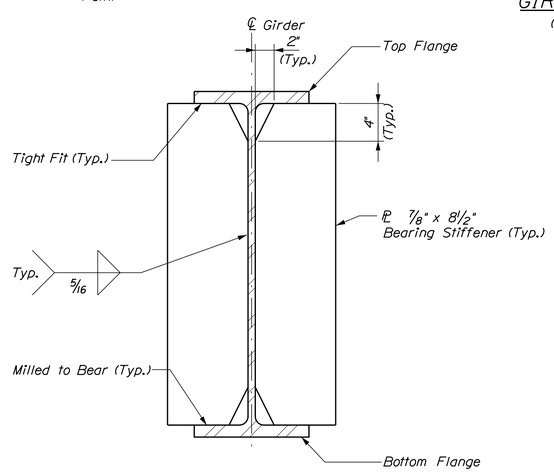

BEARING STIFFENERS AT ABUTMENT

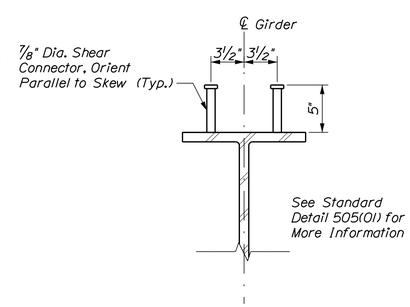

TYPICAL SECTION

STRUCTURAL STEEL NOTES

1. Camber ordinates, as shown, are computed to compensate for all dead load deflections and for the curvature of the finished grade profile.

2. Bearing stiffeners shall be plumb after erection and dead loading of the structure. Intermediate connection plates may be either plumb or normal to the top flange.

3. Diaphragm connection plates may be either plumb or normal to the top flange.

4. For details of diaphragm Type A1 and E, see Standard Details 504(01) and 504(02).

5. Bolted diaphragm connections shall be made using 7/8" diameter ASTM A325 Type 3 H.S. bolts. Hole size shall be 15/16" diameter. The minimum edge distance shall be 1 1/2" unless otherwise shown. Oversized or short-slotted holes are not permitted for use in diaphragm connections.

6. The ends of the girders and the end diaphragms shall be coated with a zinc-rich coating system in accordance with Standard Specifications Section 506, Shop Applied Protective Coating - Steel (Zinc Rich Coating System), to a distance of 12'-6" from ends of the beams. All costs related to coating will not be paid for directly, but will be considered incidental to related structural steel contract items. Paint color shall meet Federal Color Standard 595B color 20059 dark brown.

BECKER
STRUCTURAL ENGINEERS
75 York Street, Portland, Maine 04101
207.879.1838 ■ beckerstructural.com

STATE OF MAINE
DEPARTMENT OF TRANSPORTATION

STP-2050(600)

WIN 20506.00

BRIDGE NO. 3736

BRIDGE PLANS

		BY	DATE
PROJ. MANAGER	A. LATHE		
DESIGN-DETAILED	E.BROWNELL	D.BURGESS	02-03-16
CHECKED-REVIEWED	E.BROWNELL	D.BURGESS	02-03-16
DESIGN2-DETAILED2			
DESIGN3-DETAILED3			
REVISIONS 1			
REVISIONS 2			
REVISIONS 3			
REVISIONS 4			
FIELD CHANGES			

SIGNATURE

P.E. NUMBER

DATE

MEDDYBEMPS BRIDGE
DENNY'S RIVER
MEDDYBEMPS WASHINGTON COUNTY

FRAMING PLAN

SHEET NUMBER
21
OF 28

Filename: ...\00\BRIDGE\MSTA\021_Framing.dgn Division: BRIDGE Username: common Date:3/7/2016

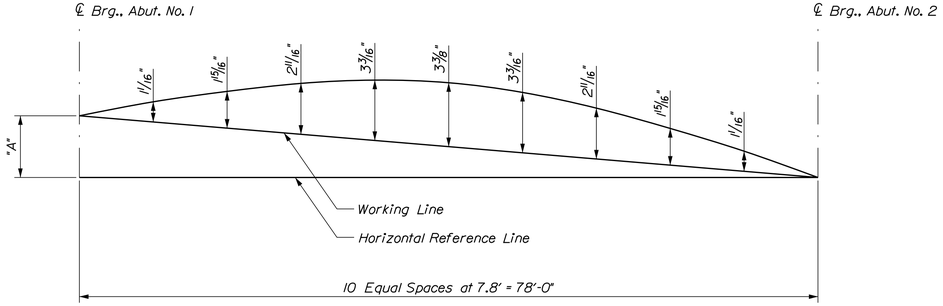

CAMBER DIAGRAM - EXTERIOR GIRDER 1

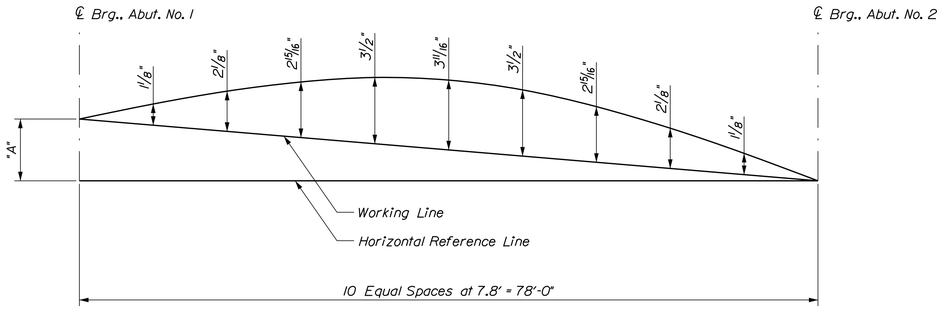

CAMBER DIAGRAM - INTERIOR GIRDERS 2 AND 3

Beam	"A" (FT.)
G1	1.31
G2	1.31
G3	1.30
G4	1.29

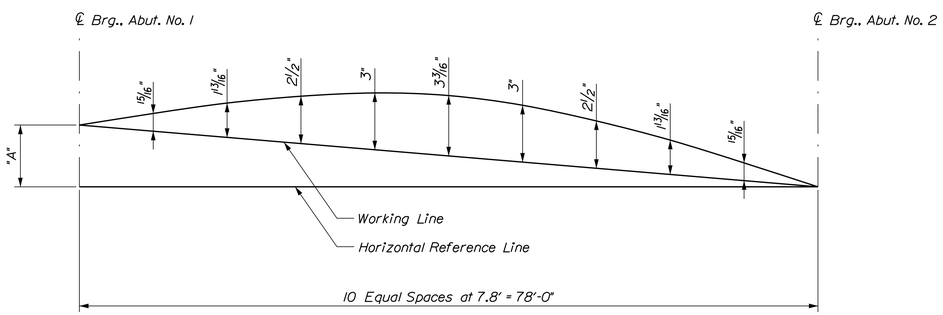

CAMBER DIAGRAM - EXTERIOR GIRDER 4

DEAD LOAD DEFLECTIONS - EXTERIOR GIRDER 1 (IN)

	℄ Brg. Abut. No. 1	1	2	3	4	5	6	7	8	9	℄ Brg Abut. No. 2
Steel	0.000	0.145	0.273	0.374	0.438	0.460	0.438	0.374	0.273	0.145	0.000
Fluid	0.000	0.650	1.229	1.683	1.971	2.070	1.971	1.683	1.229	0.650	0.000
Superimposed	0.000	0.194	0.368	0.503	0.590	0.619	0.590	0.503	0.368	0.194	0.000

Deflections given at 1/10th points.

DEAD LOAD DEFLECTIONS - INTERIOR GIRDERS 2 AND 3 (IN)

	℄ Brg. Abut. No. 1	1	2	3	4	5	6	7	8	9	℄ Brg Abut. No. 2
Steel	0.000	0.145	0.273	0.374	0.438	0.460	0.438	0.374	0.273	0.145	0.000
Fluid	0.000	0.791	1.496	2.048	2.398	2.518	2.398	2.048	1.496	0.145	0.000
Superimposed	0.000	0.153	0.289	0.396	0.463	0.487	0.463	0.396	0.289	0.153	0.000

Deflections given at 1/10th points.

DEAD LOAD DEFLECTIONS - EXTERIOR GIRDER 4 (IN)

	℄ Brg. Abut. No. 1	1	2	3	4	5	6	7	8	9	℄ Brg Abut. No. 2
Steel	0.000	0.145	0.273	0.374	0.438	0.460	0.438	0.374	0.273	0.145	0.000
Fluid	0.000	0.578	1.094	1.498	1.754	1.842	1.754	1.498	1.094	0.578	0.000
Superimposed	0.000	0.194	0.368	0.503	0.590	0.619	0.590	0.503	0.368	0.194	0.000

Deflections given at 1/10th points.

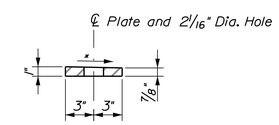

*Slope of Plate Shall Follow Slope of Profile Grade

SECTION A-A

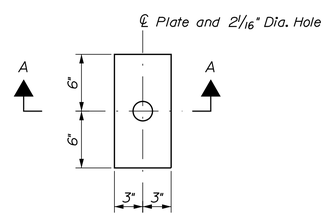

LEVELING PLATE PLAN

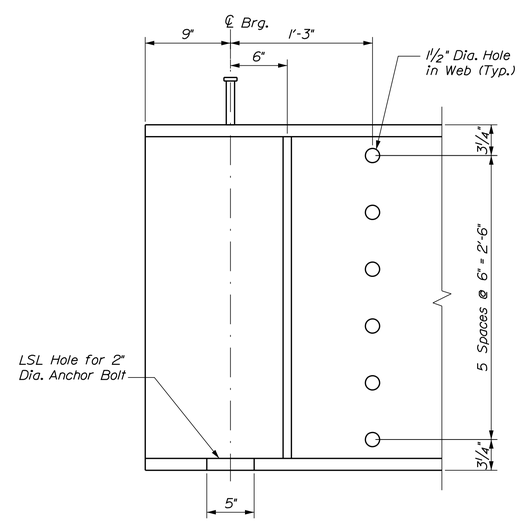

GIRDER END DETAIL

STATE OF MAINE
DEPARTMENT OF TRANSPORTATION

STP-2050(600)

WIN 20506.00

BRIDGE NO. 3736

BRIDGE PLANS

PROJ. MANAGER	A. LATHE	BY	DATE
DESIGN-DETAILED	E.BROWNELL	D.BURGESS	02-03-16
CHECKED-REVIEWED	E.BROWNELL	D.BURGESS	02-03-16
DESIGN2-DETAILED2			
DESIGN3-DETAILED3			
REVISIONS 1			
REVISIONS 2			
REVISIONS 3			
REVISIONS 4			
FIELD CHANGES			

SIGNATURE

P.E. NUMBER

DATE

MEDDYBEMPS BRIDGE
DENNY'S RIVER
MEDDYBEMPS WASHINGTON COUNTY

GIRDER DETAILS

BECKER STRUCTURAL ENGINEERS
75 York Street, Portland, Maine 04101
207.879.1838 ■ beckerstructural.com

SHEET NUMBER
22
OF 28

Filename: ...\00\BRIDGE\MSTA\022_Girder.dgn Division: BRIDGE Username: common Date:3/7/2016

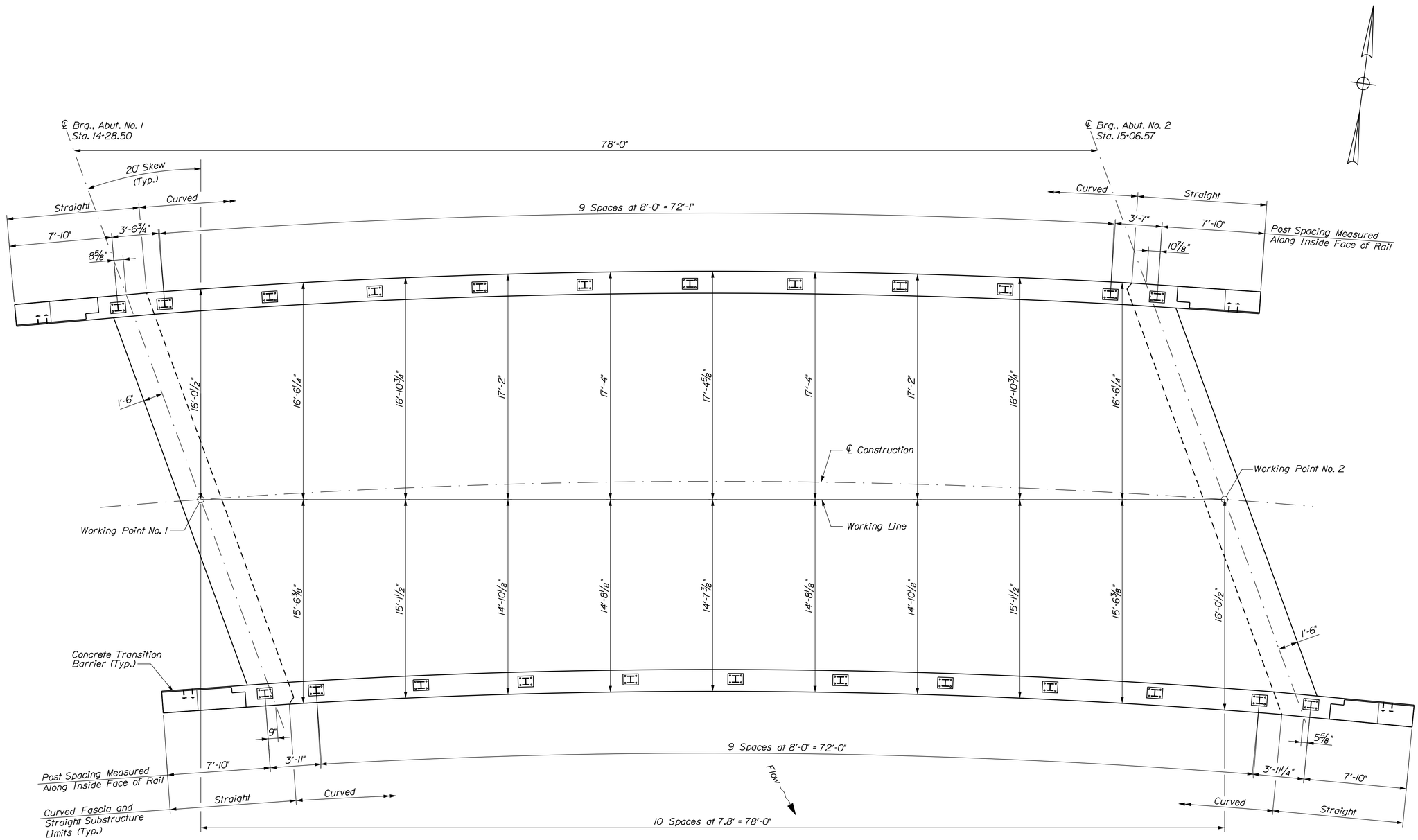

SUPERSTRUCTURE PLAN

STATE OF MAINE
DEPARTMENT OF TRANSPORTATION

STP-2050(600)

WIN 20506.00

BRIDGE NO. 3736

BRIDGE PLANS

PROJ. MANAGER	A. LATHE		
DESIGN-DETAILED	E.BROWNELL	D.BURGESS	02-03-16
CHECKED-REVIEWED	E.BROWNELL	D.BURGESS	02-03-16
DESIGN2-DETAILED2			
DESIGN3-DETAILED3			
REVISIONS 1			
REVISIONS 2			
REVISIONS 3			
REVISIONS 4			
FIELD CHANGES			

SIGNATURE

P.E. NUMBER

DATE

MEDDYBEMPS BRIDGE
DENNY'S RIVER
MEDDYBEMPS WASHINGTON COUNTY

SUPERSTRUCTURE PLAN

SHEET NUMBER

23

OF 28

BECKER
STRUCTURAL ENGINEERS
75 York Street, Portland, Maine 04101
207.879.1838 ■ beckerstructural.com

Filename: ...\023_SuperstructurePlan.dgn Division: BRIDGE Username: common Date:3/7/2016

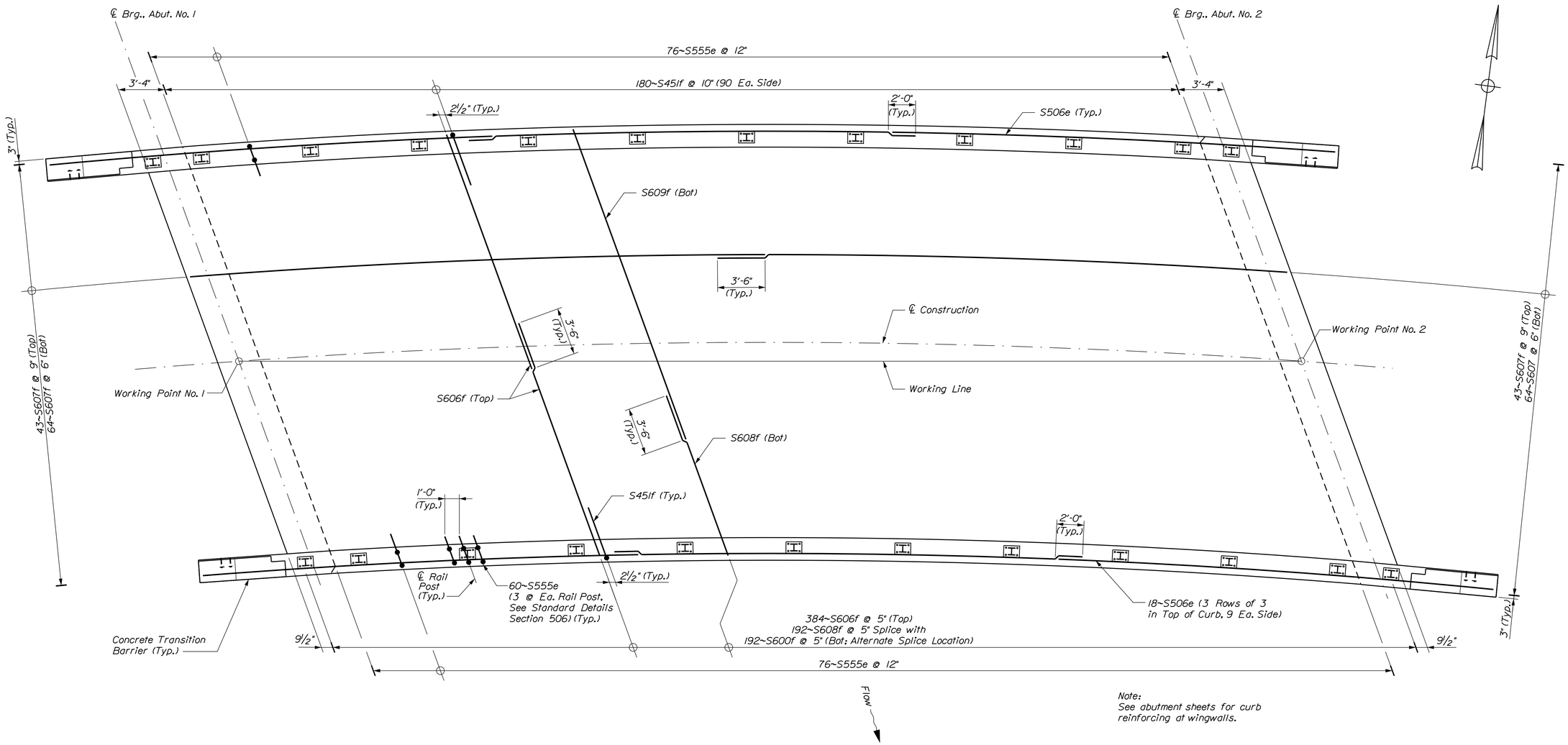

Note:
See abutment sheets for curb reinforcing at wingwalls.

SUPERSTRUCTURE REINFORCEMENT PLAN

STATE OF MAINE
DEPARTMENT OF TRANSPORTATION

STP-2050(600)

WIN 20506.00

BRIDGE NO. 3736

BRIDGE PLANS

PROJ. MANAGER	A. LATHE		
DESIGN-DETAILED	E.BROWNELL	D.BURGESS	02-03-16
CHECKED-REVIEWED	E.BROWNELL	D.BURGESS	02-03-16
DESIGN2-DETAILED2			
DESIGN3-DETAILED3			
REVISIONS 1			
REVISIONS 2			
REVISIONS 3			
REVISIONS 4			
FIELD CHANGES			

SIGNATURE

P.E. NUMBER

DATE

MEDDYBEMPS BRIDGE
DENNY'S RIVER
MEDDYBEMPS WASHINGTON COUNTY

SUPERSTRUCTURE REINFORCEMENT PLAN

SHEET NUMBER

24

OF 28

BECKER STRUCTURAL ENGINEERS
75 York Street, Portland, Maine 04101
207.879.1838 ■ beckerstructural.com

Filename: ...\024_SuperstructureReinf.dgn Division: BRIDGE Username: common Date:3/7/2016

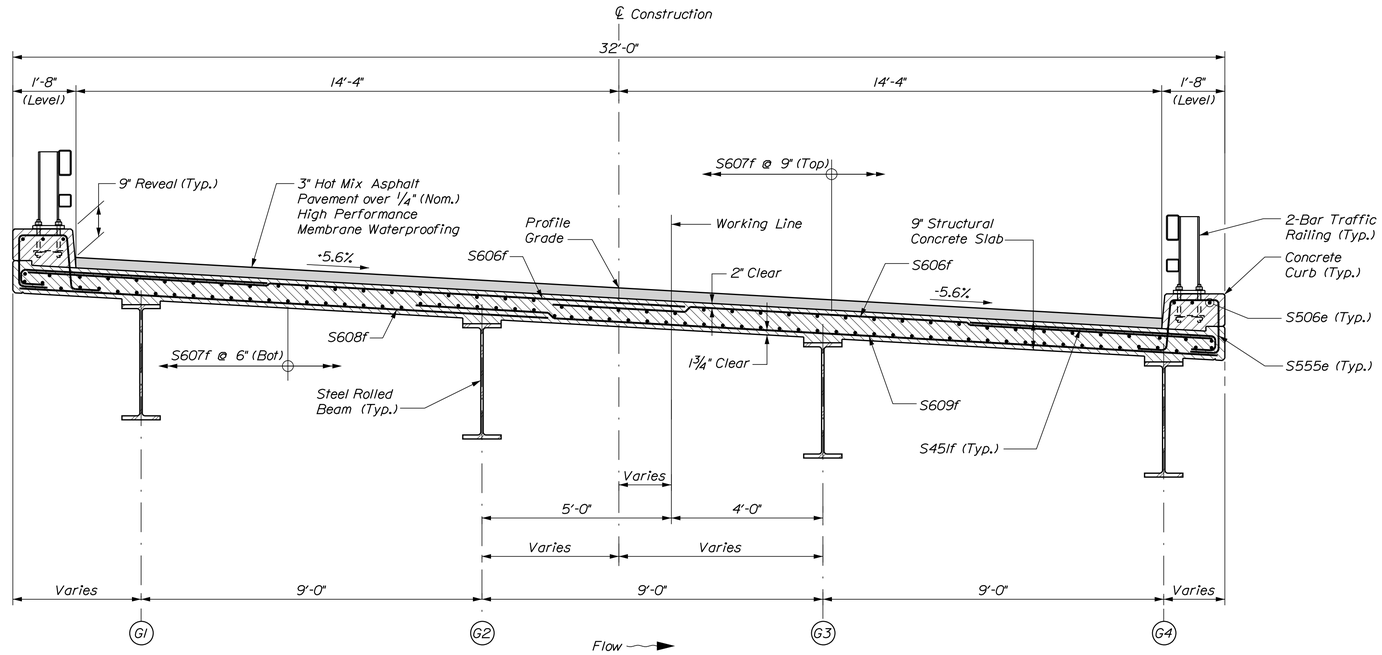

TRANSVERSE SECTION

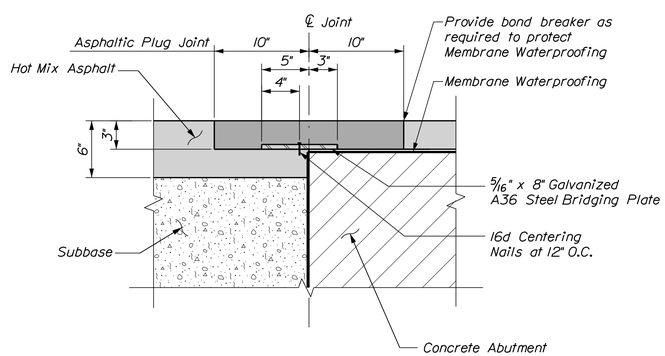

ASPHALTIC PLUG JOINT DETAIL

SUPERSTRUCTURE NOTES

1. The theoretical blocking used for design of the structure is 1 1/2" inch at the centerline of bearing of the abutments. Refer to Standard Detail 502(02) for blocking details.

2. Form a one inch V-groove on the fascias at the horizontal joint between the curb and slab.

3. Reinforcing steel shall have a minimum concrete cover of 2 inches unless otherwise noted.

4. The Contractor shall install Transition Barrier vertical closed stirrups, as shown in Standard Details Section 526, prior to the placement of the curb or sidewalk concrete.

5. The superstructure slab concrete shall be placed in one continuous operation, and shall be kept plastic until the entire placement has been made.

6. Precast deck panels are prohibited from use by the Contractor.

7. Superstructure reinforcing marked "f" shall be glass fiber reinforced polymer (GFRP).

BECKER STRUCTURAL ENGINEERS
75 York Street, Portland, Maine 04101
207.879.1838 ■ beckerstructural.com

STATE OF MAINE
DEPARTMENT OF TRANSPORTATION

STP-2050(600)

WIN 20506.00

BRIDGE NO. 3736

BRIDGE PLANS

		BY	DATE
PROJ. MANAGER	A. LATHE		
DESIGN-DETAILED	E.BROWNELL	D.BURGESS	02-03-16
CHECKED-REVIEWED	E.BROWNELL	D.BURGESS	02-03-16
DESIGN2-DETAILED2			
DESIGN3-DETAILED3			
REVISIONS 1			
REVISIONS 2			
REVISIONS 3			
REVISIONS 4			
FIELD CHANGES			

SIGNATURE

P.E. NUMBER

DATE

MEDDYBEMPS BRIDGE
DENNY'S RIVER
MEDDYBEMPS WASHINGTON COUNTY

TRANSVERSE SECTION

SHEET NUMBER
25
OF 28

Filename: ...\MSTA\025_SuperstructureDet.dgn Division: BRIDGE Username: common Date:3/7/2016

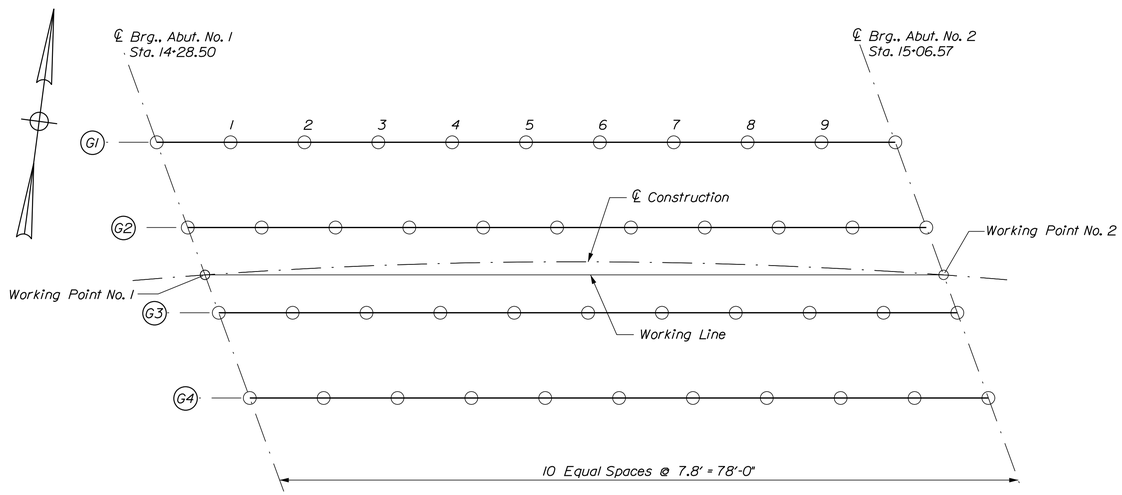

BOTTOM OF SLAB ELEVATION LAYOUT PLAN

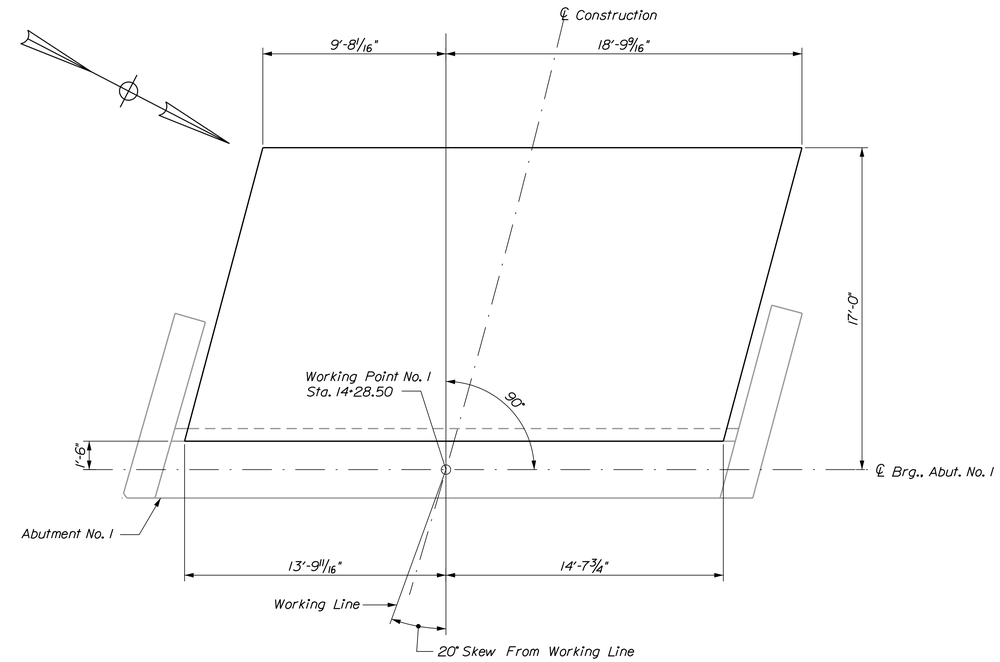

APPROACH SLAB NO. 1 PLAN

BOTTOM OF SLAB ELEVATION TABLE

	℄ Brg. Abut 1	1	2	3	4	5	6	7	8	9	℄ Brg. Abut 2
G1	172.31	172.23	172.14	172.05	171.94	171.82	171.68	171.52	171.35	171.18	171.00
G2	171.75	171.67	171.60	171.51	171.41	171.29	171.14	170.98	170.81	170.63	170.44
G3	171.19	171.12	171.04	170.95	170.85	170.73	170.59	170.43	170.25	170.07	169.89
G4	170.63	170.54	170.45	170.35	170.25	170.13	169.98	169.83	169.66	169.50	169.34

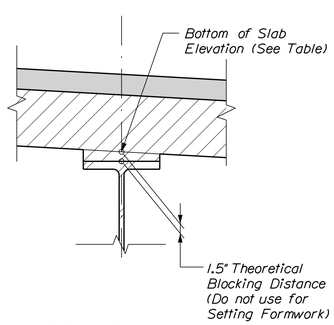

BLOCKING DETAIL

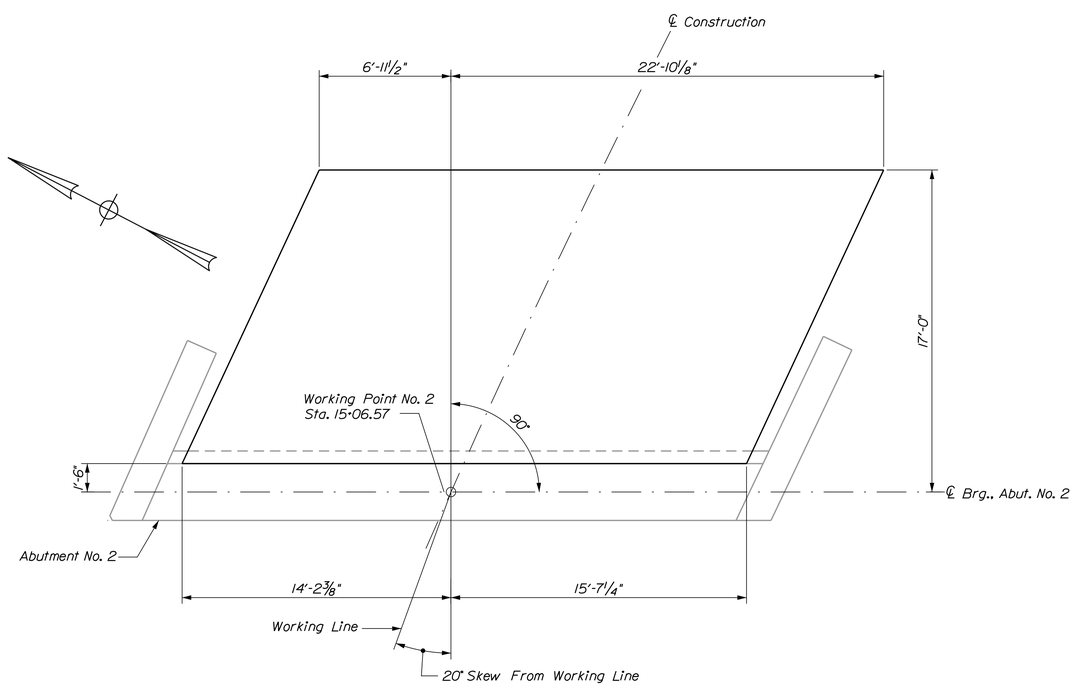

APPROACH SLAB NO. 2 PLAN

BECKER STRUCTURAL ENGINEERS
75 York Street, Portland, Maine 04101
207.879.1838 ■ beckerstructural.com

STATE OF MAINE
DEPARTMENT OF TRANSPORTATION

STP-2050(600)

BRIDGE NO. 3736 | WIN 20506.00 | BRIDGE PLANS

PROJ. MANAGER	A. LATHE		
DESIGN-DETAILED	E.BROWNELL	D.BURGESS	02-03-16
CHECKED-REVIEWED	E.BROWNELL	D.BURGESS	02-03-16
DESIGN2-DETAILED2			
DESIGN3-DETAILED3			
REVISIONS 1			
REVISIONS 2			
REVISIONS 3			
REVISIONS 4			
FIELD CHANGES			

SIGNATURE
P.E. NUMBER
DATE

MEDDYBEMPS BRIDGE
DENNY'S RIVER
MEDDYBEMPS WASHINGTON COUNTY

SUPERSTRUCTURE DETAILS

SHEET NUMBER
26
OF 28

Filename: ...\MSTA\026_SuperstructureDet.dgn Division: BRIDGE Username: common Date:3/7/2016

STRAIGHT BARS

MARK	QTY.	LENGTH	LOCATION
			Abutment No. 1
A506	38	32'-9"	
A507	2	24'-6"	
A508	2	7'-3"	
A509	2	16'-0"	
A511	6	29'-3"	
A513	10	9'-7"	NW Wing
A514	4	9'-3"	NW Wing
A515	1	8'-9"	NW Wing
A516	1	8'-3"	NW Wing
A517	4	7'-9"	NW Wing
A518	1	7'-3"	NW Wing
A519	1	6'-10"	NW Wing
A520	1	6'-4"	NW Wing
A521	1	6'-0"	NW Wing
A522	1	5'-4"	NW Wing
A523	1	4'-10"	NW Wing
A524	1	4'-5"	NW Wing
A525	1	3'-11"	NW Wing
A526	1	3'-5"	NW Wing
A527	11	9'-4"	SW Wing
A528	1	9'-0"	SW Wing
A529	1	8'-4"	SW Wing
A530	1	7'-8"	SW Wing
A531	1	6'-11"	SW Wing
A532	1	6'-3"	SW Wing
A533	1	5'-6"	SW Wing
A534	1	4'-10"	SW Wing
A535	1	4'-1"	SW Wing
A536	2	2'-6"	SW Wing
A537	3	9'-5"	NW Wing
A538	3	7'-6"	SW Wing
A806	10	9'-7"	NW Wing
A807	1	9'-3"	NW Wing
A808	1	8'-9"	NW Wing
A809	1	8'-3"	NW Wing
A810	1	7'-9"	NW Wing
A811	1	7'-3"	NW Wing
A812	1	6'-10"	NW Wing
A813	1	6'-4"	NW Wing
A814	1	6'-0"	NW Wing
A815	1	5'-4"	NW Wing
A816	1	4'-10"	NW Wing
A817	1	4'-5"	NW Wing
A818	1	3'-11"	NW Wing
A819	1	9'-4"	SW Wing
A820	1	9'-0"	SW Wing
A821	1	8'-4"	SW Wing
A822	1	7'-8"	SW Wing
A823	1	6'-11"	SW Wing
A824	1	6'-3"	SW Wing
A825	1	5'-6"	SW Wing
A826	1	4'-10"	SW Wing
A827	1	4'-1"	SW Wing
A828	1	2'-6"	SW Wing
			Approach Slab No. 1
1AS501	16	27'-10"	Transverse
1AS601	55	15'-6"	Longitudinal
			Approach Slab No. 2
2AS501	16	29'-3"	Transverse
2AS601	54	16'-6"	Longitudinal
			Superstructure Slab
S506e	18	32'-10"	Curb, Epoxy Coated
S606f	384	19'-0"	Deck, GFRP rebar
S607f	214	42'-0"	Deck, GFRP rebar
S608f	192	14'-6"	Deck, GFRP rebar
S609f	192	23'-6"	Deck, GFRP rebar

MARK	QTY.	LENGTH	LOCATION
			Abutment No. 2
B506	38	34'-4"	
B507	2	24'-6"	
B508	2	7'-3"	
B509	2	16'-0"	
B511	6	30'-9"	
B513	10	9'-6"	SE Wing
B514	1	9'-0"	SE Wing
B515	1	8'-5"	SE Wing
B516	1	7'-9"	SE Wing
B517	4	7'-1"	SE Wing
B518	1	6'-5"	SE Wing
B519	1	5'-9"	SE Wing
B520	1	5'-1"	SE Wing
B521	1	4'-6"	SE Wing
B522	1	3'-8"	SE Wing
B523	10	9'-8"	NE Wing
B524	1	9'-4"	NE Wing
B525	4	8'-10"	NE Wing
B526	1	8'-4"	NE Wing
B527	1	7'-10"	NE Wing
B528	1	7'-4"	NE Wing
B529	1	6'-10"	NE Wing
B530	1	6'-5"	NE Wing
B531	1	5'-11"	NE Wing
B532	1	5'-5"	NE Wing
B533	1	4'-11"	NE Wing
B534	1	4'-5"	NE Wing
B535	1	3'-11"	NE Wing
B536	1	3'-5"	NE Wing
B537	3	7'-2"	SE Wing
B538	3	9'-0"	NE Wing
B806	10	9'-6"	SE Wing
B807	1	9'-0"	SE Wing
B808	1	8'-5"	SE Wing
B809	1	7'-9"	SE Wing
B810	1	7'-1"	SE Wing
B811	1	6'-5"	SE Wing
B812	1	5'-9"	SE Wing
B813	1	5'-1"	SE Wing
B814	1	4'-6"	SE Wing
B815	10	9'-8"	NE Wing
B816	1	9'-4"	NE Wing
B817	1	8'-10"	NE Wing
B818	1	8'-4"	NE Wing
B819	1	7'-10"	NE Wing
B820	1	7'-4"	NE Wing
B821	1	6'-10"	NE Wing
B822	1	6'-5"	NE Wing
B823	1	5'-11"	NE Wing
B824	1	5'-5"	NE Wing
B825	1	4'-11"	NE Wing
B826	1	4'-5"	NE Wing
B827	1	3'-11"	NE Wing

BENT BARS

MARK	QTY.	LENGTH	TYPE	A	B	C	D	E	F	G	H	O	R	LOCATION
							Abutment No. 1							
A451	160	3'-8"	T9		2'-8"	6"	6"							
A452	54	2'-4"	T9		1'-4"	6"	6"							
A550	19	6'-6"	W				1'-0"	4'-6"	1'-0"					
A551	6	17'-4"	S		7'-4"	2'-8"	7'-4"							
A552	9	18'-10"	S		8'-1"	2'-8"	8'-1"							
A553	9	20'-8"	S		9'-0"	2'-8"	9'-0"							
A554	6	21'-0"	S		9'-2"	2'-8"	9'-2"							
A555	34	5'-6"	L		1'-6"									
A556	30	5'-2"	W	4'-0"			1'-0"	1'-2"	3'-0"					
A557	4	9'-10"	L		0'-8"									
A558	4	8'-5"	L	9'-2"	0'-8"									
A559	29	7'-5"	L	7'-9"	3'-0"									
A560	29	4'-9"	L	4'-5"	1'-0"									
A561e	34	11'-6"	S	3'-9"	5'-1"	1'-4"	5'-1"							Wing
A562	3	20'-0"	S		9'-4"	1'-4"	9'-4"							Wing
A563	2	13'-6"	S		6'-1"	1'-4"	6'-1"							Wing
A564	2	9'-4"	S		4'-0"	1'-4"	4'-0"							Wing
A565	3	16'-8"	S		7'-8"	1'-4"	7'-8"							Wing
A566	2	11'-10"	S		5'-3"	1'-4"	5'-3"							Wing
A567	2	9'-0"	S		3'-10"	1'-4"	3'-10"				1'-0"			Wing
A568	19	4'-2"	V				3'-0"	1'-2"			1'-0"			Wing
A569	17	4'-2"	A				3'-0"	1'-2"			4'-10"			Wing
A851	19	6'-7"	V				1'-7"	5'-0"			4'-10"			Wing
A852	17	6'-7"	A				1'-7"	5'-0"						Wing
							Abutment No. 2							
B451	176	3'-8"	T9		2'-8"	6"	6"							
B452	54	2'-4"	T9		1'-4"	6"	6"							
B550	21	6'-6"	W				1'-0"	4'-6"	1'-0"					
B551	6	21'-0"	S		9'-2"	2'-8"	9'-2"							
B552	9	20'-4"	S		8'-10"	2'-8"	8'-10"							
B553	9	19'-2"	S		8'-3"	2'-8"	8'-3"							
B554	8	18'-2"	S		7'-9"	2'-8"	7'-9"							
B555	36	5'-6"	L	4'-0"	1'-6"									
B556	32	5'-2"	W				1'-0"	1'-2"	3'-0"					
B557	4	9'-10"	L	9'-2"	0'-8"									
B558	4	8'-0"	L	7'-4"	0'-8"									
B559	32	7'-5"	L	4'-5"	3'-0"									
B560	32	4'-9"	L	3'-9"	1'-0"									
B561e	34	11'-6"	S		5'-1"	1'-4"	5'-1"							Wing
B562	3	15'-8"	S		7'-2"	1'-4"	7'-2"							Wing
B563	2	11'-8"	S		5'-2"	1'-4"	5'-2"							Wing
B564	2	8'-4"	S		3'-6"	1'-4"	3'-6"							Wing
B565	3	19'-4"	S		9'-0"	1'-4"	9'-0"							Wing
B566	2	13'-4"	S		6'-0"	1'-4"	6'-0"							Wing
B567	2	9'-4"	S		4'-0"	1'-4"	4'-0"							Wing
B568	17	4'-2"	V				3'-0"	1'-2"			1'-0"			Wing
B569	19	4'-2"	A				3'-0"	1'-2"			1'-0"			Wing
B851	17	6'-7"	V				1'-7"	5'-0"			4'-6"			Wing
B852	19	6'-7"	A				1'-7"	5'-0"			4'-8"			Wing
							Superstructure							
S451f	180	7'-8"	PR	6'-6"	8"	6"							2 1/8"	Deck, GFRP Rebar
S555e	212	5'-2"	SC	8"	1'-3"	1'-4"	1'-3"			8"		1'-5"		Curb, Epoxy Coated
							Transition Barrier (See Notes Below)							
TB551e	10	5'-2"	L	4'-6"	8"									Transition Barrier

Transition Barrier Notes:
1. Refer to MaineDOT Standard Details for Transition Barrier Reinforcing Steel.
2. Transition Barrier reinforcing steel shall be epoxy coated.
3. Modify standard Transition Barrier reinforcing steel by substituting bar TB500 with TB551e scheduled above. Quantity provided above is for one Transition Barrier only.
4. Standard hook of TB551e shall be located adjacent to the recess for the bridge railing.

TYPE - BENDING DIAGRAMS

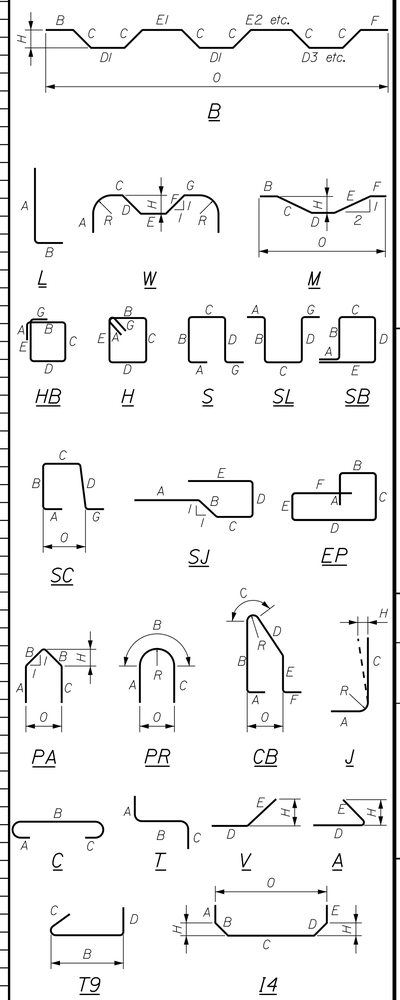

All dimensions are out-to-out of bar.

Bending details and hooks shall conform to the recommendations of the current revision of ACI Standard 315 and ACI Standard 318.

Reinforcing Bar: ASTM A615/A615M, Grade 60

Epoxy Coated Reinforcing Bars: ASTM A775/A775M, Grade 60

GENERAL NOTES

1. The first two digits following the letter(s) of the mark indicate the size of the bar:

   Mark "A502" = bar size #5
   Mark "P805" = bar size #8
   Mark "S650" = bar size #6

2. Each crank bar, Type B, may be replaced by two (2) straight bars (one top and one bottom) of the same bar size as the crank bar. Payment in either case shall be based on crank bars as schedule on the plans.

3. Bar designations ending with "e" indicate Epoxy Coated Reinforcing.

4. Bar designations ending with "f" indicate Glass Fiber Reinforced Polymer (GFRP).

BECKER STRUCTURAL ENGINEERS
75 York Street, Portland, Maine 04101
207.879.1838 ■ beckerstructural.com

STATE OF MAINE
DEPARTMENT OF TRANSPORTATION

STP-2050(600)

PIN 20506.00

BRIDGE PLANS

BRIDGE NO. 3736

	BY	DATE
PROJ. MANAGER		
DESIGN-DETAILED	E.BROWNELL	02-03-16
CHECKED-REVIEWED	E.BROWNELL	02-03-16
DESIGN2-DETAILED2		
DESIGN3-DETAILED3		
REVISIONS 1		
REVISIONS 2		
REVISIONS 3		
REVISIONS 4		
FIELD CHANGES		

A. LATHE

SIGNATURE

P.E. NUMBER

DATE

MEDDYBEMPS BRIDGE
DENNY'S RIVER
MEDDYBEMPS WASHINGTON COUNTY

REINFORCING SCHEDULE

SHEET NUMBER

27

OF 28

Filename: ...\00\BRIDGE\MSTA\027_Rebar.dgn Division: BRIDGE Username: common Date:3/7/2016

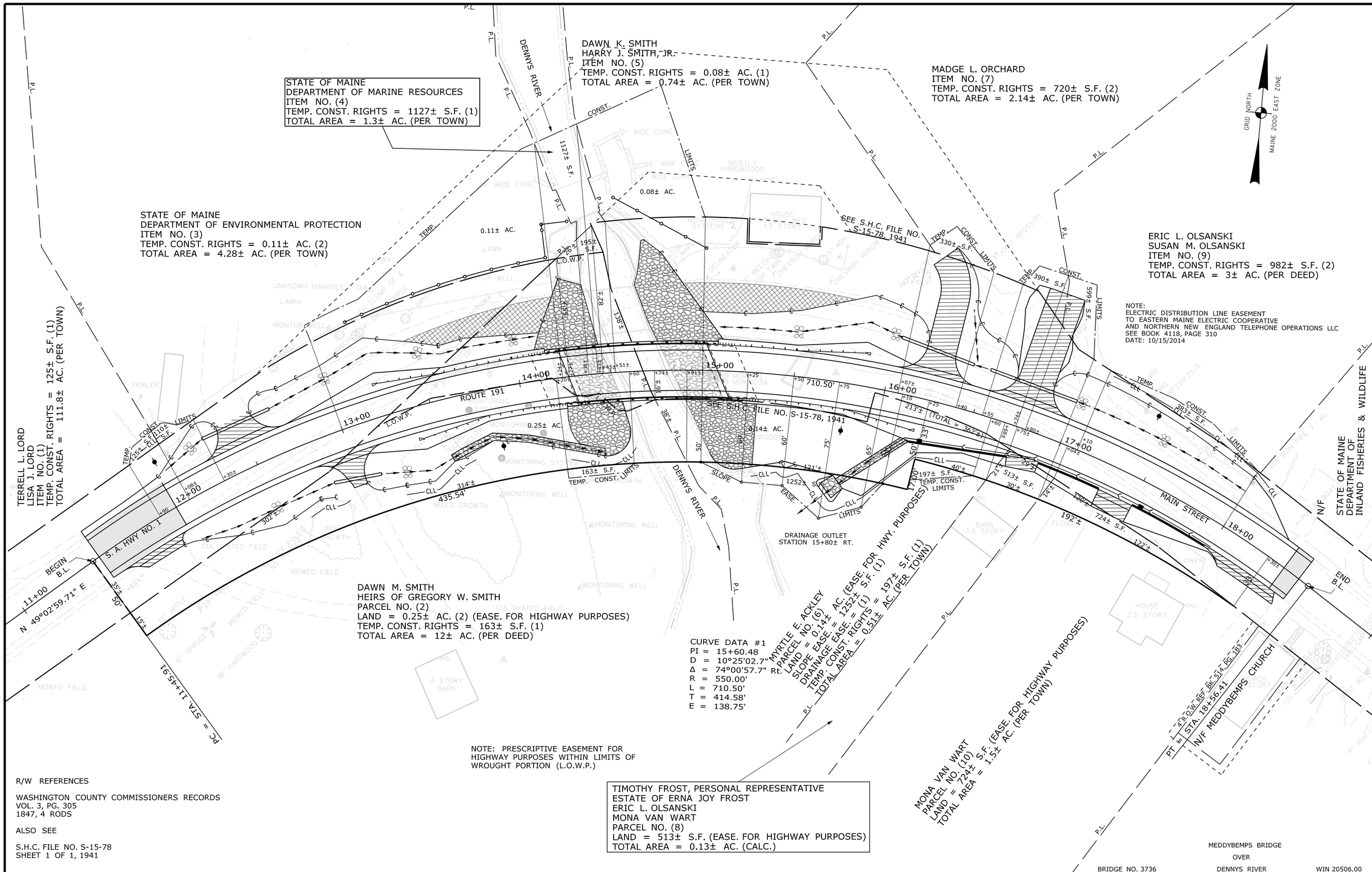

R/W REFERENCES

WASHINGTON COUNTY COMMISSIONERS RECORDS
VOL. 3, PG. 305
1847, 4 RODS

ALSO SEE

S.H.C. FILE NO. S-15-78
SHEET 1 OF 1, 1941

REVISIONS			
NO.	DATE	DESCRIPTION	BY
1	2/18/15	ADDED NOTE FOR ELECTRIC DIST. LINE EASE. ITEM 9	BDM

PLAN FILED IN PLAN BOOK		PAGE		COUNTY RECORD			
NO.	GRANTOR		INSTRUMENT	DATE	BOOK	PAGE
			COND.	2/9/15	4128	171

DAVID BERNHARDT
COMMISSIONER
JOYCE NOEL TAYLOR
CHIEF ENGINEER

DATE

STATE AID HIGHWAY NO. 1
ROUTE 191 MAIN STREET
MEDDYBEMPS WASHINGTON COUNTY
FEDERAL AID PROJECT NO. STP-2050(600)

NOVEMBER 2014 | RIGHT-OF-WAY MAP | D.O.T. FILE NO. 15-319
SCALE 1" = 25' | SHEET 1 OF 1

SHEET NUMBER
28
OF 28

SYMBOLS
IP or IPF (IRON PIPE or PIN FOUND)
S.T. (SEPTIC TANK)
(ROW MONUMENT)
BM (TRAVERSE POINT)
WELL (WELL)
GROUNDING ANT LINE
CONSTRUCTION LIMIT LINE
PROPERTY LINE
LIMITS OF WROUGHT PORTION (L.O.W.P.)
WATER LINE
GAS LINE
ELECTRIC LINE
TELEPHONE LINE
SEWER LINE
NEW RIGHT OF WAY
NEW ROW WITHIN EXIST. ROW
CONTROL OF ACCESS

ITEM	TECH	CHECKED
BASE MAP		
EXIST. R/W	BDM	
PROP. LINES	BDM	
AREAS	BDM	

STATE OF MAINE
DEPARTMENT OF TRANSPORTATION
16 STATE HOUSE STATION - AUGUSTA, ME 04333-0016
MEDDYBEMPS
RIGHT OF WAY MAP

Filename: ...\00\ROW\MSTA\001_RWPLAN1.dgn Division: BRIDGE Username: david.show Date:3/9/2016