STATE OF MAINE
DEPARTMENT OF TRANSPORTATION

SPECIFICATIONS

Design: Load and Resistance Factor Design per AASHTO LRFD Bridge Design Specifications, 7th Edition 2014 and interim specifications through 2015.

DESIGN LOADING

Live Load ..... HL - 93 Modified for Strength I (Truck only increased 25%)

TRAFFIC DATA

Current (2013) AADT	250
Future (2033) AADT	300
DHV - % of AADT	13%
Design Hour Volume	39
Heavy Trucks (% of AADT)	6%
Heavy Trucks (% of DHV)	6%
Directional Distribution (% of DHV)	51%
18 Kip Equivalent P 2.0	8
18 Kip Equivalent P 2.5	7
Design Speed	45 mph

HYDROLOGIC DATA

Drainage Area	178.5 sq mi
Ordinary High Water Discharge (Q1.1)	1406 cfs
Design Discharge (Q50)	5570 cfs
Check Discharge (Q100)	6249 cfs
Headwater Elevation (Q1.1)	104.2 ft
Headwater Elevation (Q25)	104.4 ft
Headwater Elevation (Q50)	104.4 ft
Headwater Elevation (Q100)	107.4 ft
Discharge Velocity (Q1.1)	0.9 fps
Discharge Velocity (Q50)	3.6 fps
Discharge Velocity (Q100)	7.2 fps

MATERIALS

Concrete:
- Curb ..... Class "LP"
- All Other (Unless Noted Otherwise) ..... Class "A"

Reinforcing Steel:
- Deck, Curbs, & Abutments ..... ASTM A 615/A 615M, Grade 60, Epoxy Coated
- All Other ..... ASTM A 615/A 615M, Grade 60, Plain

Structural Steel:
- All Material (except as noted) ..... ASTM A 709, Grade 50 (Galvanized)
- High Strength Bolts ..... ASTM A 325, Type 1 (Galvanized)

BASIC DESIGN STRESSES

Concrete
- Class "A" ..... f 'c = 4000 psi
- Class "LP" ..... f 'c = 5000 psi

Reinforcing Steel ..... f y = 60,000 psi

Structural Steel:
- ASTM A 709, Grade 50 ..... F y = 50,000 psi
- ASTM A 325 ..... F u = 120,000 psi

MARIAVILLE
HANCOCK COUNTY
GOODWIN BRIDGE
OVER
WEST BRANCH UNION RIVER
ROUTE 181
PROJECT NO. STP-2049(600)
PROJECT LENGTH 0.066 mi.
BRIDGE NO. 3562

UTILITIES

Union River Telephone
Emera Maine

MAINTENANCE OF TRAFFIC

Maintain 1 lane of alternating traffic controlled with signals on an 11 ft clear temporary bridge immediately upstream of the existing bridge.

LIST OF DRAWINGS

Title Sheet	1
Estimated Quantities	2
General Notes	3
General Plan	4
Profiles	5
Typical Sections	6
Boring Location Plan	7
Interpretive Subsurface Profile	8
Boring Logs (4 shts)	9-12
Intersection Geometry and Grading Plan	13
Cross Sections (3 shts)	14-16
Abutment Plan & Elevation	17
Abutment Reinforcing	18
Abutment Section	19
Pier Plan, Elevation & Section	20
Pier Reinforcing	21
Bearing Details	22
Framing Plan	23
Girder Elevation & Details	24
Field Splice Details	25
Dead Load Deflections & Camber	26
Girder Stress Diagram & BOS Elevations	27
Superstructure Plan	28
Slab Transverse Section	29
Reinforcing Schedule	30
Right of Way Map (2 shts)	31-32

T·Y·LIN INTERNATIONAL

PROJECT LOCATION:	Goodwin Bridge # 3562 which carries Route 181 over West Branch Union River, Located 0.02 miles northeast of River Road. Latitude 44°45'51" N Longitude 68°23'11" W
PROGRAM AREA:	Bridge
OUTLINE OF WORK:	Bridge Replacement

STATE OF MAINE
DEPARTMENT OF TRANSPORTATION

		DATE
APPROVED		
COMMISSIONER:		3/31/16
CHIEF ENGINEER:		3-31-16

STATE OF MAINE · DANIEL S. MAYES · No. 12572 · LICENSED PROFESSIONAL ENGINEER

SIGNATURE	12572	P.E. NUMBER
March 28, 2016	DATE	

PROJECT INFORMATION

PROGRAM	BRIDGE
PROJECT MANAGER	M. WIGHT
DESIGNER	N. BAKER
CONSULTANT	T.Y. LIN INTERNATIONAL
PROJECT RESIDENT	
CONTRACTOR	
PROJECT COMPLETION DATE	

WIN 20496.00

STP-2049(600)

MARIAVILLE
GOODWIN BRIDGE

TITLE SHEET

SHEET NUMBER
1
OF 32

Filename:\00\BRIDGE\MSTA\001_Title.dgn Division: HIGHWAY Username: DAY Date:3/28/2016

ESTIMATED QUANTITIES

ITEM NO.	DESCRIPTION	QUANTITY	UNIT
202.19	Removing Existing Bridge (159,100 LB Steel; 110 CY Concrete; 160 CY Timber)	1	LS
203.20	Common Excavation	225	CY
203.25	Granular Borrow	375	CY
206.082	Structural Earth Excavation - Major Structures, Plan Quantity	320	CY
304.10	Aggregate Base Course-Gravel	360	CY
403.208	Hot Mix Asphalt, 12.5 mm Nominal Maximum Size	54	Ton
403.213	Hot Mix Asphalt, 12.5 mm Nominal Maximum Size (Base and Intermediate Base course)	89	Ton
409.15	Bituminous Tack Coat, Applied	16	G
501.231	Dynamic Loading Test	4	EA
501.50	Steel H-beam Piles, 89 lb/ft, delivered	560	LF
501.501	Steel H-beam Piles, 89 lb/ft, in place	560	LF
501.54	Steel H-beam Piles, 117 lb/ft, delivered	650	LF
501.541	Steel H-beam Piles, 117 lb/ft, in place	650	LF
501.551	FRP Composite Pipe Pile, delivered	250	LF
501.552	FRP Composite Pipe Pile, in place	250	LF
501.90	Pile Tips	16	EA
501.91	Pile Splices	32	EA
501.92	Pile Driving Equipment Mobilization	1	LS
502.219	Structural Concrete, Abutments and Retaining Walls (85 CY)	1	LS
502.239	Structural Concrete Piers (35 CY)	1	LS
502.26	Structural Concrete Roadway and Sidewalk Slabs on Steel Bridges (151 CY)	1	LS
502.31	Structural Concrete Approach Slab (20 CY)	1	LS
502.49	Structural Concrete Curbs and Sidewalks (17 CY)	1	LS
503.12	Reinforcing Steel, Fabricated and Delivered	13,300	LB
503.13	Reinforcing Steel, Placing	13,300	LB
503.14	Epoxy-Coated Reinforcing Steel, Fabricated and Delivered	11,250	LB
503.15	Epoxy-Coated Reinforcing Steel, Placing	11,250	LB
504.702	Structural steel fabricated and delivered, welded (107,000 LB)	1	LS
504.71	Structural steel erection (107,000 LB)	1	LS
505.08	Shear Connectors (2,168 EA)	1	LS
506.9103	Galvanizing (107,000 LB)	1	LS
507.0811	Steel Bridge Railing, 2 Bar (364 FT)	1	LS
507.0812	Steel Approach Railing, 2 Bar	3	EA
507.0812	Steel Approach Railing, 2 Bar - Modified	1	EA
510.10	Special Detour 11 foot Roadway Width, Vehicular and Pedestrian Traffic Not Separated	1	LS
512.081	French Drains (110 FT)	1	LS
514.06	Curing Box for Concrete Cylinders	1	EA
515.21	Protective Coating for Concrete Surfaces (79 SY)	1	LS
520.232	Expansion Device - Asphaltic Plug Joint	56	LF
523.52	Bearing Installation	8	EA
523.5401	Laminated Elastomeric Bearings, Fixed	8	EA
526.301	Temporary Concrete Barrier, Type I (750 LF)	1	LS
527.34	Work Zone Crash Cushions	3	Unit

ESTIMATED QUANTITIES

ITEM NO.	DESCRIPTION	QUANTITY	UNIT
606.1722	Bridge Transition - Type 11	3	EA
606.1722	Bridge Transition - Type 11 - Modified	1	EA
606.23	Guardrail Type 3c - Single Rail	200	LF
606.231	Guardrail Type 3c - 15' radius and less	5	LF
606.259	Anchorage Assembly	1	EA
606.265	Terminal End - Single Rail - Galvanized Steel	1	EA
606.353	Reflectorized Flexible Guardrail Marker	1	EA
610.08	Plain Riprap	830	CY
610.18	Stone Ditch Protection	20	CY
613.319	Erosion Control Blanket	3	SY
618.141	Seeding Method Number 3	1	Unit
619.1401	Erosion Control Mix	50	CY
620.58	Erosion Control Geotextile	820	SY
627.18	12 inch Solid White Pavement Marking Line	23	LF
627.733	4" White or Yellow Painted Pavement Marking Line	1,800	LF
627.76	Temporary Pavement Marking Line, White or Yellow	1	LS
627.77	Removing Existing Pavement Marking	230	SF
627.811	Temporary Bi-directional Yellow Delineators	75	EA
629.05	Hand Labor, Straight Time	20	HR
631.12	All Purpose Excavator (Including Operator)	20	HR
631.172	Truck - Large (Including Operator)	10	HR
637.071	Dust Control	1	LS
639.19	Field Office, Type B	1	EA
643.72	Temporary Traffic Signal at: Route 181 & Goodwin Bridge	1	LS
645.106	Demount Regulatory, Warning, Confirmation and Route Marker Assembly Sign	4	EA
645.116	Reinstall Regulatory, Warning, Confirmation and Route Marker Assembly Sign	4	EA
652.312	Type 111 Barricades	6	EA
652.33	Drum	10	EA
652.34	Cone	20	EA
652.35	Construction Signs	400	SF
652.361	Maintenance of Traffic Control Devices (243 CD)	1	LS
652.38	Flaggers	300	HR
656.75	Temporary Soil Erosion and Water Pollution Control	1	LS
659.10	Mobilization	1	LS

TY-LIN INTERNATIONAL

STATE OF MAINE
DEPARTMENT OF TRANSPORTATION

STP-2049(600)

WIN 20496.00

BRIDGE NO. 3562

BRIDGE PLANS

STATE OF MAINE
DANIEL S. MYERS
No. 12572
LICENSED
PROFESSIONAL ENGINEER

PROJ. MANAGER	Michael Wight	BY	DATE
DESIGN-DETAILED	B. Toothaker	B. Toothaker	2/16
CHECKED-REVIEWED	J. Olund	T. Poulin	2/16
DESIGN2-DETAILED2			
DESIGN3-DETAILED3			
REVISIONS 1			
REVISIONS 2			
REVISIONS 3			
REVISIONS 4			
FIELD CHANGES			

SIGNATURE
12572
P.E. NUMBER
March 28, 2016
DATE

GOODWIN BRIDGE
OVER WEST BRANCH UNION RIVER
MARIAVILLE HANCOCK COUNTY

ESTIMATED QUANTITIES

SHEET NUMBER
2
OF 32

Filename: ...\BRIDGE\MSTA\002_Quantities.dgn Division: HIGHWAY Username: Date:3/28/2016

GENERAL CONSTRUCTION NOTES

1. All utility facilities shall be adjusted by the respective utilities unless otherwise noted.

2. The clearing limits as shown on the plans are approximate. The exact limits shall be established in the field by the Resident. Payment for clearing will be considered incidental to related contract items.

3. Granular borrow used to backfill muck excavation or in low wet areas to 1' above water level or old ground shall meet requirements for Granular Borrow for Underwater Backfill.

4. Existing inslopes steeper than 2:1 in proposed fill areas shall be benched as directed by the Resident.

5. Guardrail posts as shown in the Standard Details shall be modified from the indicated length of 6 feet to a length of 7 feet, with an embedment of 4.5 feet. Payment will be considered incidental to the guardrail pay items.

6. A low volume guardrail end shall be installed concurrently with the placement of each section of beam guardrail.

7. Holes created by Guardrail removal will be filled and compacted with approved materials as directed by the Resident. Payment to be considered incidental to the guardrail items.

8. Two Reflectorized Flexible Guardrail Markers (Item 606.353) will be installed at each proposed guardrail end.

9. Connections for proposed guardrail to existing guardrail will be considered incidental to 606 Items.

10. Erosion Control Mix shall be placed to a nominal depth of 4 inches in all seeding areas unless otherwise noted or directed by the Resident.

11. Any base pavement not surfaced before winter will require temporary pavement markings of paint, both yellow centerline and white edge lines and will be considered part of Item 627.76

12. Do not excavate for Aggregate Subbase Course where existing material is suitable as determined by the Resident.

13. For easements, construction limits, and right-of-way lines, refer to Right of Way Maps.

14. Place a 24 inch wide strip of Temporary Erosion Control Blanket on the side slopes along the top of the riprap and behind the wingwalls.

15. Protective coating for concrete surfaces shall be applied to the following areas:

    All exposed surfaces of concrete curbs and sidewalks.
    Fascia down to drip notch.
    Concrete wearing surfaces
    Top of abutment backwalls and to one foot below the top of backwalls on the fill side.

16. Project information referred to below may be accessed at the following MaineDOT web address: http://www.maine.gov/mdot/contractors/*projecttbl

17. The existing bridge plans may be accessed at the MaineDOT web address. The plans are reproductions of the original drawings as prepared for the construction of the bridge. It is very unlikely that the plans will show any construction field changes or any alterations which may have been made to the bridge during its life span.

18. The project geotechnical report titled: Geotechnical Design Report for the Replacement of Goodwin Bridge Route 181 over West Branch of the Union River, MaineDOT Soils Report No. 2015-12, June 12, 2015, may be accessed at the MaineDOT web address.

19. Geotechnical information furnished or referred to in this plan set is for the use of the Bidders and the Contractor. No assurance is given that the information or interpretations will be representative of actual subsurface conditions at the construction site. MaineDOT will not be responsible for the Bidders' or Contractor's interpretations of, or conclusions drawn from, the geotechnical information. The boring logs contained in the plan set present factual and interpretive subsurface information collected at discrete locations. Data provided may not be representative of the subsurface conditions between the boring locations.

20. The hydrologic report of the bridge site may be accessed at the MaineDOT web address. The hydrologic report is based on MaineDOT's interpretation of the information obtained for the subject site. No assurance is given that the information or the conclusions of the report will be representative of actual conditions at the time of construction.

21. Quantities included for pay items measured and paid for by Lump Sum are estimated quantities and are provided by MaineDOT for informational purposes only. Lump Sum pay items will be paid for at the Contract Bid amount, with no addition or reduction in payment to the Contractor if the actual final quantities are different from the MaineDOT provided estimated quantities, except as follows:

    a. If a Lump Sum pay item is eliminated, the requirements of Standard Specifications Section 109.2, Elimination of Items, will take precedence.

    b. If other Contract Documents specifically allow a change in payment for a Lump Sum pay item, those requirements will be followed.

    c. If a design change results in changes to estimated quantities for Lump Sum pay items, price adjustments will be made in accordance with Standard Specifications Section 109.7, Equitable Adjustments to Compensation.

22. The existing bridge shall be removed by and become the property of the Contractor. The steel portions of the existing bridge are coated with a lead-based paint system. The Contractor is responsible for the containment, proper management and disposal of all lead-contaminated hazardous waste generated by the process of demolishing the bridge. The Contractor is responsible for implementing appropriate OSHA mandated personal protection standards related to this process. Once the existing bridge is removed, the Contractor is solely responsible for the care, custody and control of the components of the existing bridge and any hazardous waste generated as a result of the storage, recycling or disposal of the bridge component including lead-coated steel. The Contractor shall recycle or reuse the steel in accordance with the Maine Department of Environmental Protection's "Maine Hazardous Waste Management Regulations," Chapter 850. A copy of this regulation is available at MaineDOT's offices on Child Street in Augusta. Payment for all labor, materials, equipment and other costs required to remove and dispose of the existing bridge will be considered incidental to the bridge removal pay item.

23. The existing abutments and piers shall be removed in their entirety. Timber pile foundations in conflict with proposed piles, as determined by the Resident, shall be removed in their entirety.

24. The Contractor is made aware that the existing timber to be removed contains creosote.

25. The span between the centerline bearings of the abutments for the temporary bridge shall be equal to or greater than the span between the centerline bearings of the existing bridge abutments.

26. All costs for cofferdams, including pumping, maintenance, related temporary soil erosion and water pollution controls and removal, will not be paid for directly, but will be considered incidental to related Contract items.

T·Y·LIN INTERNATIONAL

STATE OF MAINE
DEPARTMENT OF TRANSPORTATION

STP-2049(600)

WIN 20496.00

BRIDGE NO. 3562

BRIDGE PLANS

STATE OF MAINE
DANIEL S. MYERS
No. 12572
LICENSED
PROFESSIONAL ENGINEER

PROJ. MANAGER	Michael Wight	BY	DATE
DESIGN-DETAILED	D. Myers	P. McGuire	9/15
CHECKED-REVIEWED	J. Olund	J. Olund	9/15
DESIGN2-DETAILED2			
DESIGN3-DETAILED3			
REVISIONS 1			
REVISIONS 2			
REVISIONS 3			
REVISIONS 4			
FIELD CHANGES			

12572
P.E. NUMBER

March 28, 2016
DATE

GOODWIN BRIDGE
OVER WEST BRANCH UNION RIVER
MARIAVILLE HANCOCK COUNTY

GENERAL NOTES

SHEET NUMBER
3
OF 32

Filename: ...\MSTA\003_General_Notes.dgn Division: HIGHWAY Username: Date:3/28/2016

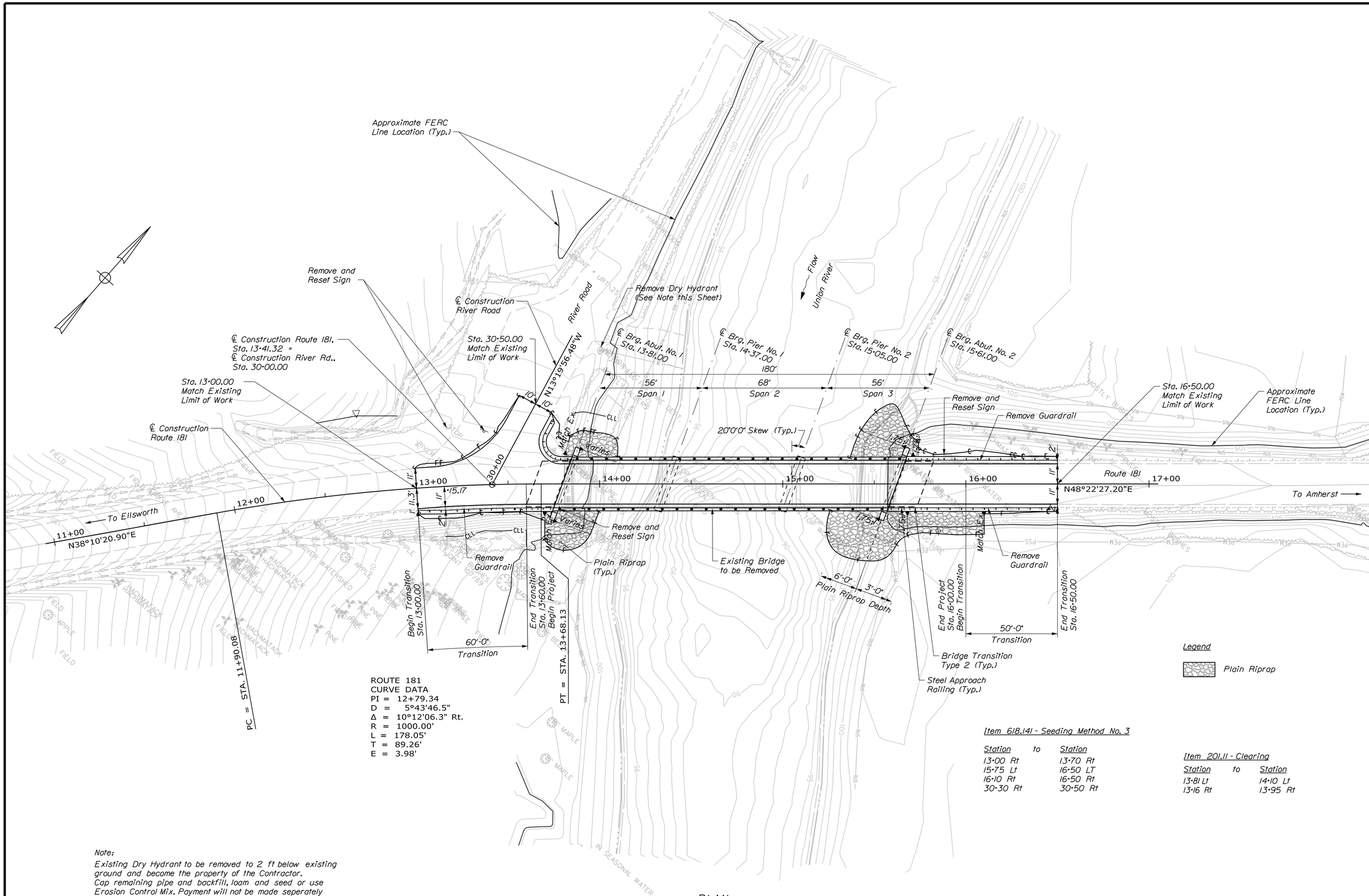

Filename: ...\00\HIGHWAY\MSTA\004_HDPlan.dgn Division: HIGHWAY Username: Date:3/28/2016

STATE OF MAINE
DEPARTMENT OF TRANSPORTATION

STP-2049(600)

WIN 20496.00

BRIDGE NO. 3562

BRIDGE PLANS

STATE OF MAINE DANIEL S. MYERS No. 12572 LICENSED PROFESSIONAL ENGINEER

12572	SIGNATURE	
P.E. NUMBER		
March 28, 2016	DATE	

		BY	DATE
PROJ. MANAGER	Michael Wright		
DESIGN-DETAILED	T. Kelley	T. Kelley	9/15
CHECKED-REVIEWED	H. Cowan	R. Hebert	9/15
DESIGN2-DETAILED2			
DESIGN3-DETAILED3			
REVISIONS 1			
REVISIONS 2			
REVISIONS 3			
REVISIONS 4			
FIELD CHANGES			

GOODWIN BRIDGE
OVER WEST BRANCH UNION RIVER
MARIAVILLE HANCOCK COUNTY

GENERAL PLAN

T·Y·LIN INTERNATIONAL

SHEET NUMBER

4

OF 32

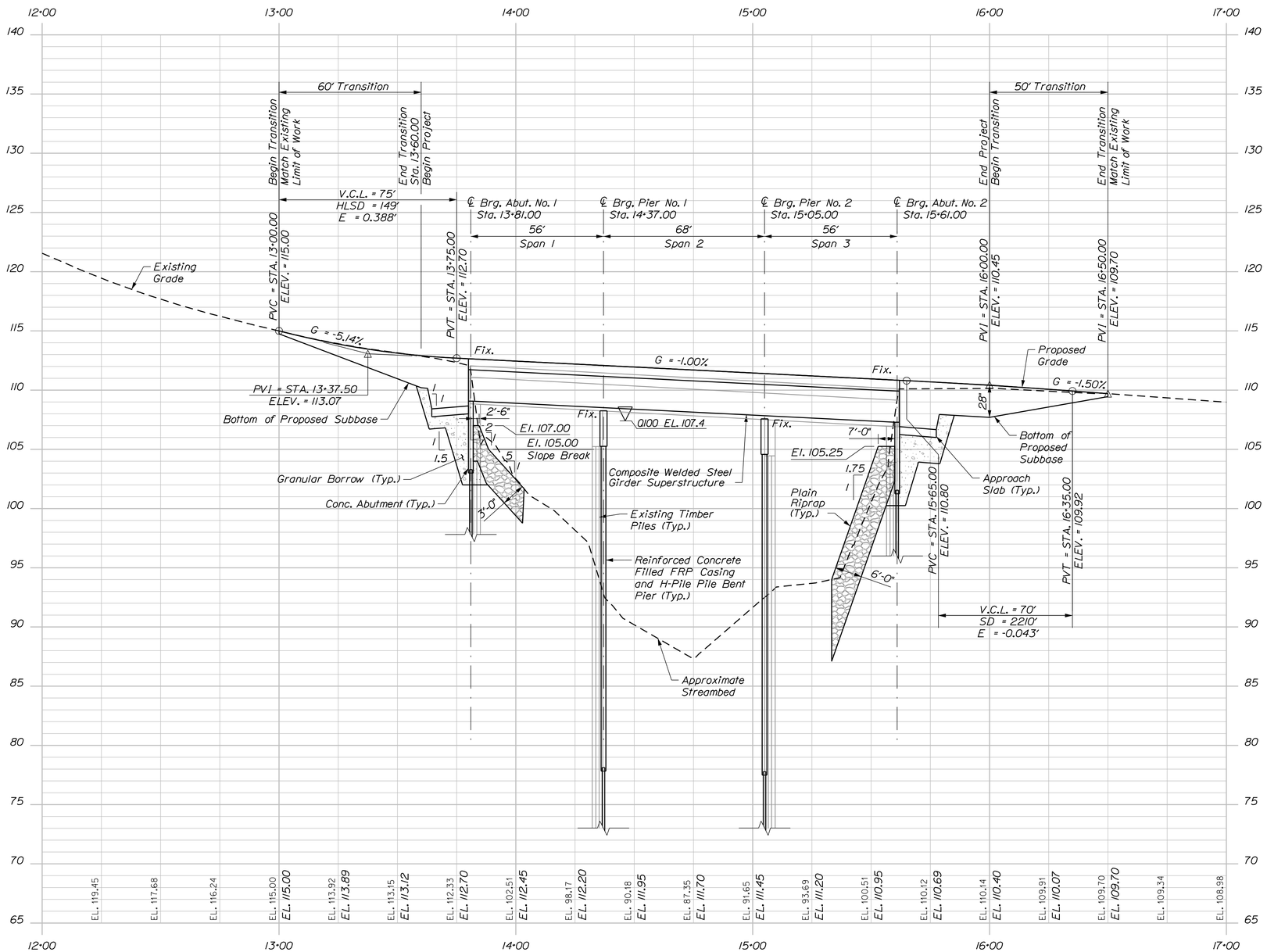

PROFILE: ROUTE 181

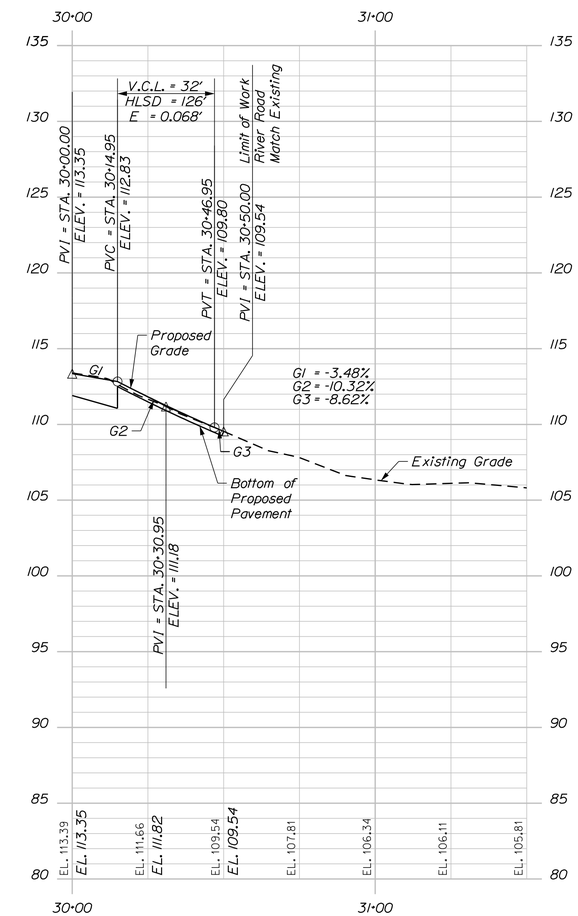

PROFILE: RIVER RD.

Horiz. 25 0 25 50
Vert. 5 0 5 10
Scale of Feet

T·Y·LIN INTERNATIONAL

STATE OF MAINE
DEPARTMENT OF TRANSPORTATION

STP-2049(600)

WIN 20496.00

BRIDGE NO. 3562

BRIDGE PLANS

STATE OF MAINE
DANIEL S. MYERS
No. 12572
LICENSED
PROFESSIONAL ENGINEER

PROJ. MANAGER	Michael Wight	BY	DATE
DESIGN-DETAILED	T. Kelley	T. Kelley	9/15
CHECKED-REVIEWED	H. Cowan	R. Hebert	9/15
DESIGN2-DETAILED2			
DESIGN3-DETAILED3			
REVISIONS 1			
REVISIONS 2			
REVISIONS 3			
REVISIONS 4			
FIELD CHANGES			

12572
P.E. NUMBER

March 28, 2016
DATE

GOODWIN BRIDGE
OVER WEST BRANCH UNION RIVER
MARIAVILLE HANCOCK COUNTY

PROFILES

SHEET NUMBER
5
OF 32

Date:3/28/2016
Username:
Division: HIGHWAY
Filename: ...\HIGHWAY\MSTA\005_HDProfile.dgn

SUPERELEVATION TABLE				
ROUTE 181				
Lt. Shoulder	Lt. Travelway	Station	Rt. Travelway	Rt. Shoulder
Match Existing	Match Existing	13+00	Match Existing	Match Existing
-1.75%	-1.75%	13+22.43	-4.30%	-8.14%
-1.82%	-1.82%	13+25	-4.21%	-7.86%
-2.50%	-2.50%	13+50	-3.34%	-5.13%
-2.50%	-2.50%	13+74	-2.50%	-2.50%
-2.50%	-2.50%	13+79.93	-2.50%	-2.50%
		To		
-2.50%	-2.50%	15+62.06	-2.50%	-2.50%
-2.50%	-2.50%	15+63	-2.50%	-2.50%
-2.50%	-2.50%	15+68	-2.76%	-3.68%
-3.70%	-2.50%	15+75	-3.12%	-5.33%
-8.00%	-2.50%	16+00	-4.42%	-11.22%
-12.30%	-2.50%	16+25	-5.71%	-17.11%
Match Existing	Match Existing	16+50	Match Existing	Match Existing

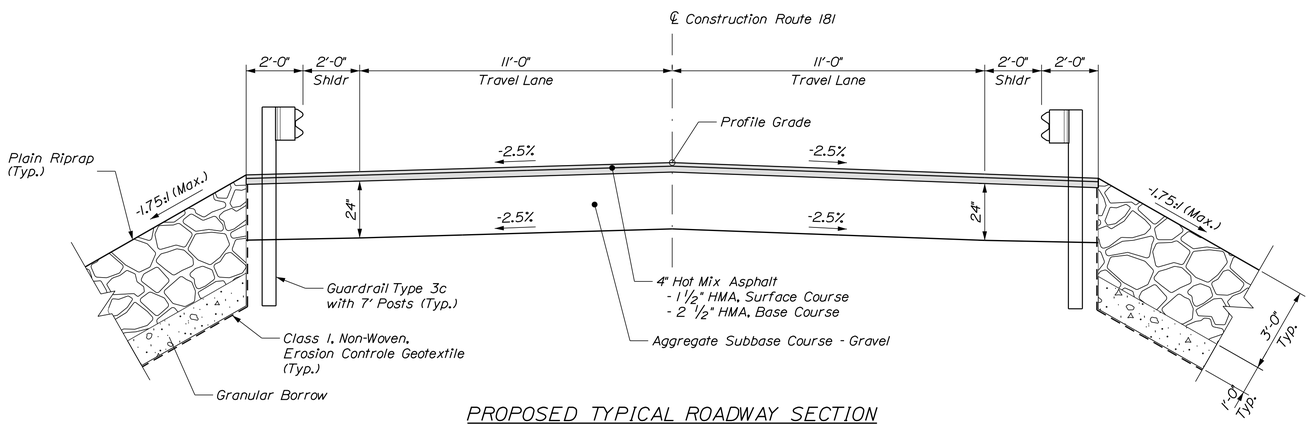

PROPOSED TYPICAL ROADWAY SECTION

Route 181

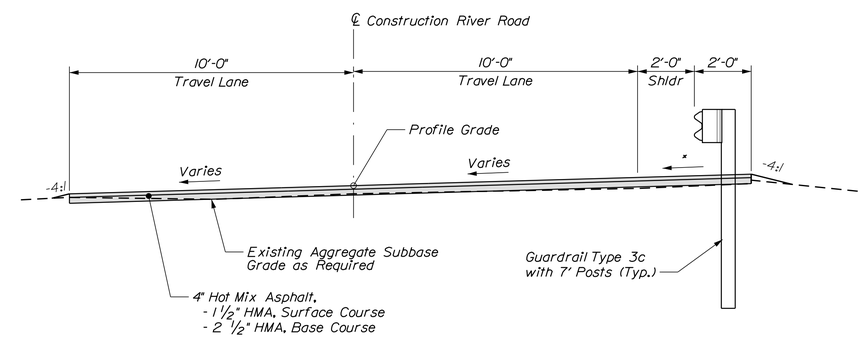

* See Note 3, this sheet.

PROPOSED TYPICAL ROADWAY SECTION

River Road

NOTES:

1. The pavement base and subbase depths as shown on the plans are intended to be nominal.
2. Crowns for both normal and superelevation sections for all courses of subbase and pavement shall be straight.
3. The shoulder pavement will have the same slope as traveled way.
4. All shoulders on this project will have full depth HMA (4").
5. See "Intersection Geometry and Grading Plan" for River Road grading.

T·Y·LIN INTERNATIONAL

STATE OF MAINE
DEPARTMENT OF TRANSPORTATION

STP-2049(600)

WIN 20496.00

BRIDGE NO. 3562

BRIDGE PLANS

STATE OF MAINE
DANIEL S. MYERS
No. 12572
LICENSED
PROFESSIONAL ENGINEER

PROJ. MANAGER	Michael Wight	BY	DATE
DESIGN-DETAILED	T. Kelley	T. Kelley	9/15
CHECKED-REVIEWED	H. Cowan	R. Hebert	9/15
DESIGN2-DETAILED2			
DESIGN3-DETAILED3			
REVISIONS 1			
REVISIONS 2			
REVISIONS 3			
REVISIONS 4			
FIELD CHANGES			

SIGNATURE

12572
P.E. NUMBER

March 28, 2016
DATE

GOODWIN BRIDGE
OVER WEST BRANCH UNION RIVER
MARIAVILLE HANCOCK COUNTY

TYPICAL SECTIONS

SHEET NUMBER

6

OF 32

Filename: ...\MSTA\006_Typical Sections.dgn Division: HIGHWAY Username: Date:3/28/2016

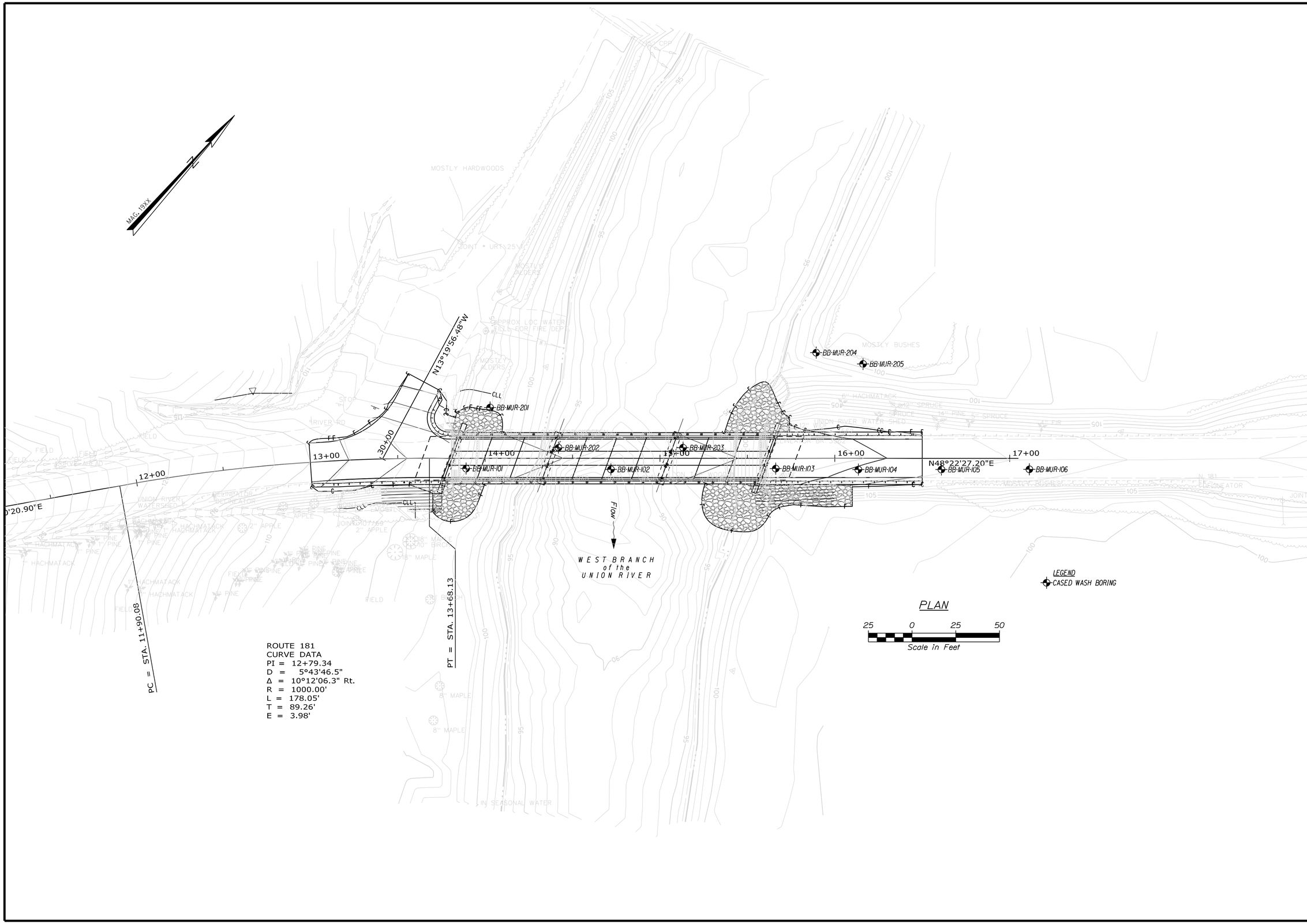

STATE OF MAINE
DEPARTMENT OF TRANSPORTATION

STP-2049(600)

WIN 20496.00

3562

BRIDGE PLANS

	BY	DATE
PROJ. MANAGER		
DESIGN-DETAILED		
CHECKED-REVIEWED		
DESIGN2-DETAILED2	L.KRUSINSKI	DEC 2014
DESIGN3-DETAILED3		
REVISIONS 1		
REVISIONS 2		
REVISIONS 3		
REVISIONS 4		
FIELD CHANGES		

SIGNATURE

P.E. NUMBER

DATE

GOODWIN BRIDGE
WEST BRANCH of the UNION RIVER
MARIAVILLE HANCOCK COUNTY

BORING LOCATION PLAN

SHEET NUMBER

7

OF 32

Filename: ...\00\GEOTECH\MSTA\007_BLP1.dgn Division: BRIDGE Username: david.sullivan Date:3/28/2016

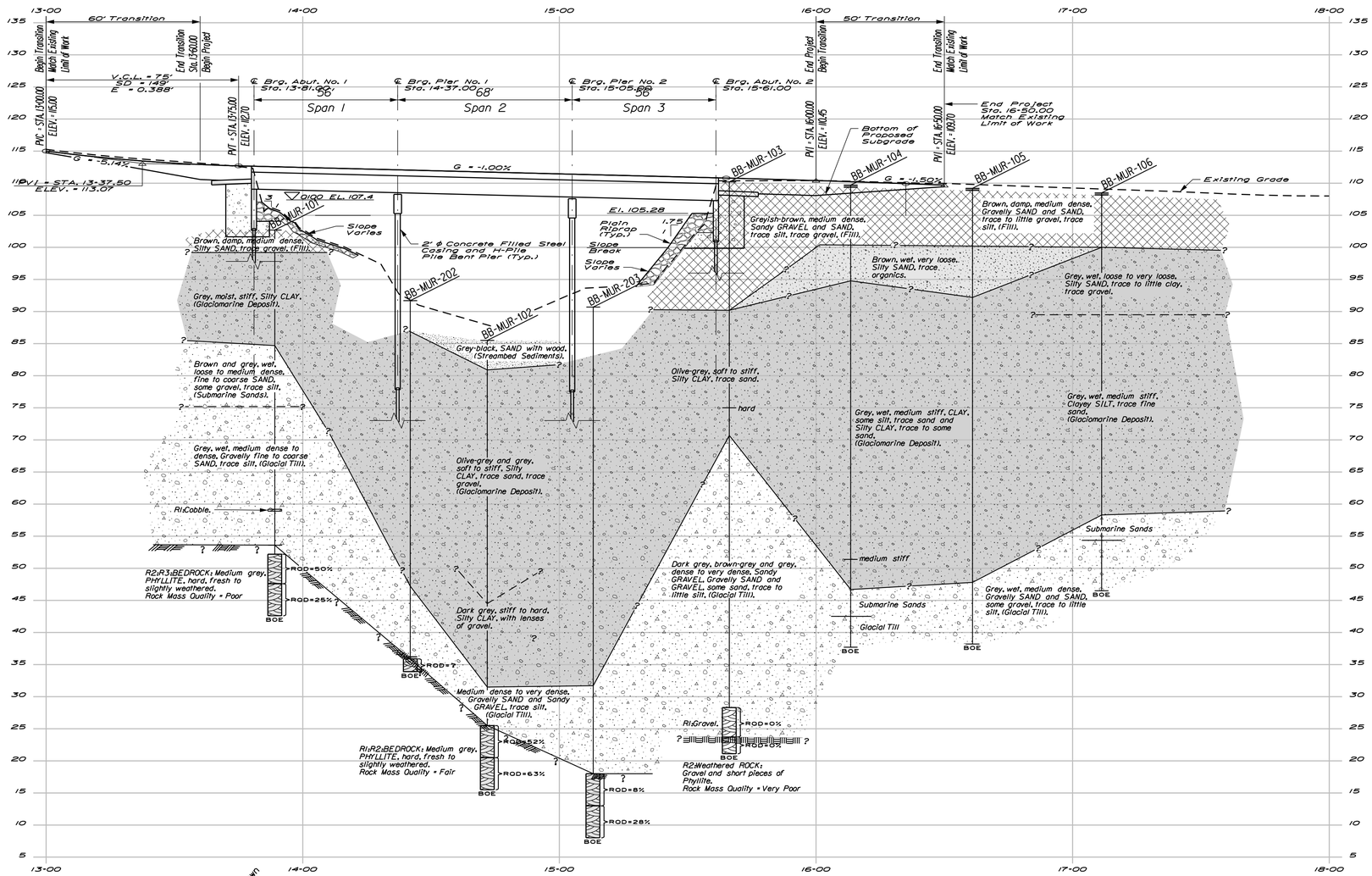

LEGEND

Weathered ROCK

Top of Intack Bedrock

Boring No.
Offset, if shown

Pavement Thickness if applicable

Strata Interface

ROD= Rock Quality Designation for Rock Core Sample

Boring

BOE= Bottom Of Exploration

Refusal

No Refusal

PROFILE

HORIZ 25 0 25 50

VERT 10 0 10 20

SCALE

Note: This generalized interpretive soil profile is intended to convey trends in subsurface conditions. The boundaries between strata are approximate and idealized, and have been developed by interpretations of widely spaced explorations and samples. Actual soil transitions may vary and are probably more erratic. For more specific information refer to the exploration logs.

BB-MUR-201, BB-MUR-204 and BB-MUR-205 are not shown for clarity. See Boring Logs sheets for specific details.

STATE OF MAINE
DEPARTMENT OF TRANSPORTATION

STP-2049(600)

WIN 20496.00

3562

BRIDGE PLANS

	BY	DATE
PROJ. MANAGER		
DESIGN-DETAILED		
CHECKED-REVIEWED		
DESIGN2-DETAILED2	L.KRUSINSKI	OCT 2015
DESIGN3-DETAILED3	T.WHITE	
REVISIONS 1		
REVISIONS 2		
REVISIONS 3		
REVISIONS 4		
FIELD CHANGES		

SIGNATURE

P.E. NUMBER

DATE

GOODWIN BRIDGE
WEST BRANCH of the UNION RIVER
MARIAVILLE HANCOCK COUNTY

INTERPRETIVE SUBSURFACE PROFILE

SHEET NUMBER

8

OF 32

Filename: ...\00\GEOTECH\MSTA\008_ISP1.dgn Division: BRIDGE Username: david.sullivan Date:3/28/2016

Filename: ...\MSTA\009_BORING LOGS1.dgn
Division: BRIDGE
Username: david.sullivan
Date:3/28/2016

Maine Department of Transportation — Soil/Rock Exploration Log — US CUSTOMARY UNITS

Project: Goodwin Bridge #3562 carries Route 181 over the West Branch of
Location: Mariaville, Maine

Boring No.: BB-MUR-101 — WIN: 20496.00

Driller:	Northern Test Boring	Elevation (ft.)	102.7	Auger ID/OD:	N/A
Operator:	Mike/Adam	Datum:	NAVD88	Sampler:	Standard Split Spoon
Logged By:	B. Wilder	Rig Type:	Diedrich D-50	Hammer Wt./Fall:	140#/30"
Date Start/Finish:	10/13/2014; 07:30-16:30	Drilling Method:	Cased Wash Boring	Core Barrel:	NQ-2"
Boring Location:	13+89.1, 5.9 ft Rt.	Casing ID/OD:	HW	Water Level*:	None Observed
Hammer Efficiency Factor: 0.801		Hammer Type:	Automatic ☒ Hydraulic ☐ Rope & Cathead ☐		

Definitions:
D = Split Spoon Sample; MD = Unsuccessful Split Spoon Sample attempt; U = Thin Wall Tube Sample; MU = Unsuccessful Thin Wall Tube Sample attempt; V = Insitu Vane Shear Test, PP = Pocket Penetrometer; MV = Unsuccessful Insitu Vane Shear Test attempt; R = Rock Core Sample; SSA = Solid Stem Auger; HSA = Hollow Stem Auger; RC = Roller Cone; WOH = weight of 140lb. hammer; WOR/C = weight of rods or casing; WO1P = Weight of one person; S_u = Insitu Field Vane Shear Strength (psf); T_v = Pocket Torvane Shear Strength (psf); q_p = Unconfined Compressive Strength (ksf); N-uncorrected = Raw field SPT N-value; Hammer Efficiency Factor = Annual Calibration Value; N_{60} = SPT N-uncorrected corrected for hammer efficiency; N_{60} = (Hammer Efficiency Factor/60%)*N-uncorrected; $S_{u(lab)}$ = Lab Vane Shear Strength (psf); WC = water content, percent; LL = Liquid Limit; PL = Plastic Limit; PI = Plasticity Index; G = Grain Size Analysis; C = Consolidation Test

Sample No.	Pen./Rec. (in.)	Sample Depth (ft.)	Blows (/6 in.) Shear Strength (psf) or RQD (%)	N-uncorrected	N_{60}
1D	24/10	0.00 - 2.00	7/6/5/8	11	15
2D	24/18	4.00 - 6.00	5/5/4/5	9	12
3D / V1	24/20	9.00 - 11.00	Hydraulic Push / Su=1250/402 psf		
V2		10.00 - 10.63	Su=1116/446 psf		
1U / MV	24/20	14.00 - 16.00 / 14.63	Piston Sampler Would Not Push		
4D	24/13	19.00 - 21.00	6/7/6/5	13	17
5D	24/10	24.00 - 26.00	3/3/3/4	6	8
6D	24/11	29.00 - 31.00	13/11/18/12	29	39
7D	24/14	34.00 - 36.00	13/6/5/7	11	15
8D	24/15	39.00 - 41.00	10/5/5/7	10	13
R1	60/3	43.50 - 48.50			
MD	1/0	49.00 - 49.08	50(1")	---	
R2	55.2/51	50.50 - 55.10	RQD = 50%		
R3	60/48	55.10 - 60.10	RQD = 25%		

Casing Blows: 21, 41, 45, 80, 18, 39, 48, 51, 46, OPEN HOLE, 12, 39, 52, 48, 46, 26, OPEN HOLE, NQ-2, NQ-2

Elevation (ft.)	Depth (ft.)	Visual Description and Remarks	Laboratory Testing Results/AASHTO and Unified Class.
		Brown, damp, medium dense, Silty fine to coarse SAND, trace gravel, (Fill).	
99.20	3.50	Grey, moist, stiff, Silty CLAY, with 2" gravel layer at 5.8-6.0 ft bgs, (Glaciomarine Deposit).	
		Grey, moist, stiff, Silty CLAY, trace gravel, trace sand, (Glaciomarine Deposit). 55x110 mm vane raw torque Readings: V1: 28.0/9.0 ft-lbs V2: 25.0/10.0 ft-lbs	G#242910 A-6, CL WC=32.4% LL=36 PL=22 PI=14
		Grey-brown, Clayey SILT, trace fine sand, (Glaciomarine Deposit). Failed 55x110 mm vane attempt.	G,C#242911 A-6, CL WC=27.9% LL=36 PL=19 PI=17
84.70	18.00	Set in HW Casing at 19.0 ft bgs. Brown, wet, medium dense, fine to coarse SAND, some gravel, trace silt, (Submarine Sands).	
79.70	23.00	Grey, wet, loose, fine to coarse SAND, some gravel, trace silt.	
75.20	27.50	Grey, wet, dense, Gravelly, fine to coarse SAND, trace silt, (Glacial Till).	G#242912 A-1-b, SW WC=11.4%
		Similar to above, except medium dense.	
		Grey, wet, medium dense, Gravelly fine to coarse SAND, trace silt, (Glacial Till).	G#242913 A-1-a, SW WC=9.8%
		R1:COBBLE, from 43.5-43.8 ft bgs.	
53.60	49.10	Failed sample attempt.	
		Top of Bedrock at Elev. 53.6 ft. Solid drilling from 49.1-50.5 ft bgs.	
52.20	50.50	R2: Bedrock: Hard, fresh to slightly weathered, aphanitic to fine grained, medium grey PHYLLITE, with high-angle relic bedding and calcite and feldspar (granite) intrusions. Typically close, high angle and horizontal breaks; undulating, rough, Slightly discolored open to moderately wide, and mud infilling. Highly fractured and broken from 50.5-51.1 ft and from 54.3-54.6 ft (bottom of sample). Two drill breaks. Rock Mass Quality = Poor. R2:Core Times (min:sec) 50.5-51.5 ft (4:00) 51.5-52.5 ft (4:00) 52.5-53.5 ft (3:25) 53.5-54.5 ft (4:00) 54.5-55.1 ft (4:50) 92% Recovery Core Blocked	
		R3: Bedrock: Similar to R2 with more abundant intrusions. Very close to close, typically horizontal with fewer high angle breaks; undulating, rough, slightly discolored, open to moderately wide, and mud infilling. Highly fractured from 55.1-55.6 ft and 57.2-57.5 ft. Rock Mass Quality = Poor. R3:Core Times (min:sec) 55.1-56.1 ft (4:00) 56.1-57.1 ft (3:00) 57.1-58.1 ft (6:30) 58.1-59.1 ft (4:00) 59.1-60.1 ft (4:10) 80% Recovery	
42.60	60.10	Bottom of Exploration at 60.10 feet below ground surface.	

Remarks:
Auto hammer #283
5" Concrete Bridge Deck.
9.1 ft from Bridge Deck to Ground.

Stratification lines represent approximate boundaries between soil types; transitions may be gradual.
* Water level readings have been made at times and under conditions stated. Groundwater fluctuations may occur due to conditions other than those present at the time measurements were made.

Page 1 of 1 — Boring No.: BB-MUR-101

Maine Department of Transportation — Soil/Rock Exploration Log — US CUSTOMARY UNITS

Project: Goodwin Bridge #3562 carries Route 181 over the West Branch of
Location: Mariaville, Maine

Boring No.: BB-MUR-102 — WIN: 20496.00

Driller:	MaineDOT	Elevation (ft.)	85.5	Auger ID/OD:	N/A
Operator:	Giles/Daggett/Giles	Datum:	NAVD88	Sampler:	Standard Split Spoon
Logged By:	Be Schonewald	Rig Type:	CME 45C	Hammer Wt./Fall:	140#/30"
Date Start/Finish:	10/13,15/2014	Drilling Method:	Cased Wash Boring	Core Barrel:	NQ-2"
Boring Location:	14+71.9, 6.4 ft Rt.	Casing ID/OD:	HW & NW	Water Level*:	None Observed
Hammer Efficiency Factor: 0.908		Hammer Type:	Automatic ☒ Hydraulic ☐ Rope & Cathead ☐		

Sample No.	Pen./Rec. (in.)	Sample Depth (ft.)	Blows (/6 in.) Shear Strength (psf) or RQD (%)	N-uncorrected	N_{60}
MD	24/0	0.00 - 2.00	WOR/WOR/WOR/WOR	---	
1D	24/22	4.00 - 6.00	4/1/2/2	3	5
2D	24/20	9.00 - 11.00	5/1/1/1	2	3
3D/MV	24/24	14.00 - 16.00	3/1/2/1	3	5
4D/MV	24/24	19.00 - 21.00	4/2/1/2	3	5
5D/MV	24/20	24.00 - 26.00	2/0.5/0.5/1	1	2
MV 6D/MV	24/10	29.50 - 31.50	6/4/5/6	9	14
7D	24/22	34.00 - 36.00	WOH/WOH/WOH/WOH	---	
8D/MV		39.00 - 41.00	Hydraulic Push		
MD	24/0	44.00 - 46.00	11/12/13/13	25	38
9D	24/20	49.00 - 51.00	4/2/4/5	6	9
10D	24/4	54.00 - 56.00	19/9/8/15	17	26
11D	10.8/4	59.00 - 59.90	22/50(4.8")	---	
R1	60/60	60.20 - 65.20	RQD = 52%		
R2	57.6/57.6	65.20 - 70.00	RQD = 63%		

Casing Blows: 20, 73, 28, 26, 23, 33, 37, 44, 43, 17, 38, 37, 41, 47, 28, 37, 41, 50, 45, 30, 39, 44, 54, 45, 31, 38, 41, 49, 47, 20, 26, 31, 42, 43, 29, 48, 33, 59, 39, OPEN HOLE, 76, 102, 103, 71, 91, 114, 129, 130, 82, 174, 220, a200, 56, NQ-2

Elevation (ft.)	Depth (ft.)	Visual Description and Remarks	Laboratory Testing Results/AASHTO and Unified Class.
		Failed sample attempt.	
		Grey-black, fine to coarse SAND, trace silt with wood, (Streambed Sediments).	
80.90	4.60	1D (4.6-6.0 ft) Olive-grey, medium stiff, Silty CLAY, trace very fine sand. (Glaciomarine Deposit).	G#242914 A-6, CL WC=35.0% LL=34 PL=23 PI=11
		Grey, soft, CLAY, some silt, trace sand, with 2 pieces rounded gravel, (Glaciomarine Deposit).	
		Failed 55x110 mm vane attempt, could not push. Grey, medium stiff, CLAY, some silt, trace sand, (Glaciomarine Deposit).	G#242915 A-6, ML WC=29.9% LL=36 PL=25 PI=11
		Failed 55x110 mm vane attempt, could not push. Grey, medium stiff, Silty CLAY, no sand evident, (Glaciomarine Deposit).	
		Failed 55x110 mm vane attempt, could not push. Grey, soft, Silty CLAY, trace sand.	G#242916 A-4, ML WC=36.4% LL=34 PL=26 PI=8
		Failed 55x110 mm vane attempt, could not push. Failed 55x110 mm vane attempt, could not push. Dark grey, stiff, Silty CLAY, (Glaciomarine Deposit).	
		Dark grey, very soft, Silty CLAY, trace sand, with minor shell fragments.	G#242917 A-4, ML WC=37.9% LL=34 PL=26 PI=8
		Failed 55x110 mm vane sample attempt. Dark grey, Silty CLAY, with minor sand and gravel pieces in bottom of sample, (Glaciomarine Deposit). Drilling behavior suggests layers of granular material at 41.0 ft bgs.	
		Attempt to retrieve lost sample. Material in spoon consists of dark grey, SILT and CLAY, hard, with few pieces fine gravel.	
		Dark grey, stiff, Silty CLAY, trace sand, (Glaciomarine Deposit).	G#242918 A-6, CL WC=28.0% LL=32 PL=20 PI=12
31.50	54.00	Brownish-grey, medium dense, Gravelly fine to coarse SAND, trace silt, (Glacial Till).	
		a200 blows for 4". HW Casing REFUSAL at 57.4 ft bgs, telescope NW Casing, NO REFUSAL at 58.0 ft bgs.	
		Brownish-black, fine to coarse Sandy GRAVEL, trace silt, includes broken rock, (Glacial Till). NW Casing REFUSAL at 59.8 ft bgs. Roller Coned ahead to 60.2 ft bgs.	
25.30	60.20	Top of Bedrock at Elev. 25.3 ft. R1: Bedrock: Hard, fresh to slightly weathered, aphanitic to fine grained, medium grey PHYLLITE with near vertical and highly undulating relic bedding and abundant calcite and feldspar (granite) intrusions. Close, high angle and horizontal breaks; undulating, rough, discolored, open to moderately wide, and infilled with mud. Two drill breaks. Rock Mass Quality = Fair. R1:Core Times (min:sec) 60.2-61.2 ft (5:55) 61.2-62.2 ft (5:25) 62.2-63.2 ft (5:50) 63.2-64.2 ft (4:25) 64.2-65.2 ft (5:05) 100% Recovery	
		R2:Bedrock: Similar to R1. Wide (65.2-68.2 ft) to close (68.2-70.0 ft), typically horizontal and few high angle breaks; undulating, rough, typically discolored and open, with minor mud infilling. Two drill breaks. Rock Mass Quality = Fair. R2: Core Times (min:sec) 65.2-66.2 ft (6:45) 66.2-67.2 ft (5:10) 67.2-68.2 ft (4:50) 68.2-69.2 ft (4:20) 69.2-70.0 ft (Jam) 100% Recovery	
15.50	70.00	Bottom of Exploration at 70.00 feet below ground surface.	

Remarks:
Approximately 25.0 ft of casing sheared off and remains in hole, top of casing approximately 30.0 ft below mud line.

Stratification lines represent approximate boundaries between soil types; transitions may be gradual.
* Water level readings have been made at times and under conditions stated. Groundwater fluctuations may occur due to conditions other than those present at the time measurements were made.

Page 1 of 1 — Boring No.: BB-MUR-102

Maine Department of Transportation — Soil/Rock Exploration Log — US CUSTOMARY UNITS

Project: Goodwin Bridge #3562 carries Route 181 over the West Branch of
Location: Mariaville, Maine

Boring No.: BB-MUR-103 — WIN: 20496.00

Driller:	MaineDOT	Elevation (ft.)	110.2	Auger ID/OD:	5" Solid Stem
Operator:	Giles/Daggett/Giles	Datum:	NAVD88	Sampler:	Standard Split Spoon
Logged By:	Be Schonewald	Rig Type:	CME 45C	Hammer Wt./Fall:	140#/30"
Date Start/Finish:	10/13,15/2014	Drilling Method:	Cased Wash Boring	Core Barrel:	NQ-2"
Boring Location:	15+66.2, 5.9 ft Rt.	Casing ID/OD:	HW & NW	Water Level*:	None Observed
Hammer Efficiency Factor: 0.908		Hammer Type:	Automatic ☒ Hydraulic ☐ Rope & Cathead ☐		

Sample No.	Pen./Rec. (in.)	Sample Depth (ft.)	Blows (/6 in.) Shear Strength (psf) or RQD (%)	N-uncorrected	N_{60}
1D	24/3	5.00 - 7.00	5/4/6/5	10	15
2D	24/4	10.00 - 12.00	4/5/4/6	9	14
3D	24/4	15.00 - 17.00	8/5/4/5	9	14
4D	24/22	20.00 - 22.00	3/3/3/4	6	9
5D/MV	24/22	25.00 - 27.00	2/1/1/2	2	3
6D/MV	24/11	30.30 - 32.30	2/2/1/2	3	5
7D / V1	24/4	35.00 - 37.00 / 35.30 - 35.41	2/2/4/3 / Su=244/945 psf	6	9
8D/MV	24/8	40.00 - 42.00	7/19/9/5	28	42
9D	20.4/5	45.00 - 46.70	46/26/37/50(2.4")	63	95
10D	24/7	50.00 - 52.00	14/22/17/14	39	59
11D	24/6	55.00 - 57.00	17/15/12/14	27	41
12D	24/2	60.00 - 62.00	13/14/15/22	29	44

Casing Blows: SSA, 26, 41, 53, ---, 72, 64, 61, 61, 42, 24, 31, 26, 19, 34, 123, 35, 45, 65, 72, 72, 7, 10, 15, 12, 14, ---, 17, 19, 20, 13, 19, 21, 33, 48, 27, 37, 42, 34, 51, 105, 65, 98, a150 RC, 62, 74, 81, 85, 121, 56, 90, 100, 88, 78, RC

Elevation (ft.)	Depth (ft.)	Visual Description and Remarks	Laboratory Testing Results/AASHTO and Unified Class.
		Greyish-brown, medium dense, fine to coarse Sandy GRAVEL, trace to little silt. Piece of gravel in tip of spoon, (Fill).	
		Greyish-brown, medium dense, fine to coarse Sandy GRAVEL, trace silt, (Fill).	
		Greyish-tan, medium dense, fine SAND, little to some silt, with 2 pieces gravel and trace medium to coarse sand, (Fill).	
90.20	20.00	Olive-grey, stiff, CLAY, some silt, trace sand, (Glaciomarine Deposit).	G#242919 A-6, CL WC=29.9% LL=38 PL=24 PI=14
		Failed 16x32 mm vane attempt, could not push. Olive-grey, soft, Silty CLAY, (Glaciomarine Deposit).	
		Failed 16x32 mm vane attempt, could not push. Olive-grey, medium stiff, Silty CLAY, trace sand, (Glaciomarine Deposit).	G#242920 A-6, CL WC=36.1% LL=37 PL=22 PI=15
		Olive-grey, hard, Clayey SILT; no evidence of sand or gravel. 16x32 mm vane raw torque readings: V1: 27.0/6.0 in-lbs. Drilling behavior suggests stiff and or granular layers from 37.0-39.5 ft.	
70.70	39.50	Failed 16x32 mm vane attempt, could not push, sand and gravel in wash water. Dark grey, dense, fine to coarse Sandy GRAVEL, trace silt, (Glacial Till).	
		Dark grey, very dense, fine to coarse Sandy GRAVEL, trace silt, (Glacial Till). Angular piece gravel, fresh, broken, in tip of spoon.	
		a150 blows for 0.3 ft. Roller Coned ahead to 50.0 ft bgs. Attempt to core; pop through at approximately 48.5 ft; predominately soil boney below from 47.5-50.6 ft bgs.	
		Brown-grey, very dense, fine to coarse SAND, some gravel, little silt, (Glacial Till).	G#242921 A-1-a, SM WC=10.8%
		Brown-grey, dense, fine to coarse Sandy GRAVEL, trace to little silt, (Glacial Till).	
		Brown-grey, dense, GRAVEL, some fine to coarse sand, trace silt, (Glacial Till). Large piece gravel in tip of spoon.	
		Cobbles? Very difficult drilling.	

Remarks:

Stratification lines represent approximate boundaries between soil types; transitions may be gradual.
* Water level readings have been made at times and under conditions stated. Groundwater fluctuations may occur due to conditions other than those present at the time measurements were made.

Page 1 of 2 — Boring No.: BB-MUR-103

Maine Department of Transportation — Soil/Rock Exploration Log — US CUSTOMARY UNITS

Project: Goodwin Bridge #3562 carries Route 181 over the West Branch of
Location: Mariaville, Maine

Boring No.: BB-MUR-103 — WIN: 20496.00

Driller:	MaineDOT	Elevation (ft.)	110.2	Auger ID/OD:	5" Solid Stem
Operator:	Giles/Daggett/Giles	Datum:	NAVD88	Sampler:	Standard Split Spoon
Logged By:	Be Schonewald	Rig Type:	CME 45C	Hammer Wt./Fall:	140#/30"
Date Start/Finish:	10/13,15/2014	Drilling Method:	Cased Wash Boring	Core Barrel:	NQ-2"
Boring Location:	15+66.2, 5.9 ft Rt.	Casing ID/OD:	HW & NW	Water Level*:	None Observed
Hammer Efficiency Factor: 0.908		Hammer Type:	Automatic ☒ Hydraulic ☐ Rope & Cathead ☐		

Sample No.	Pen./Rec. (in.)	Sample Depth (ft.)	Blows (/6 in.) Shear Strength (psf) or RQD (%)	Casing Blows
R1	55.2/32	81.90 - 86.50		NQ-2
R2	31.2/21	86.50 - 89.10	RQD = 0%	

Elevation (ft.)	Depth (ft.)	Visual Description and Remarks	Laboratory Testing Results/AASHTO and Unified Class.
28.30	81.90	NW Casing Refusal. R1: Predominately mix of rock types; short pieces of core to gravel size pieces; some gravel rounded. Bottom 0.7 ft of core appears to be PHYLLITE encountered in BB-MUR-101 and BB-MUR-102.	
23.70	86.50	Top of Weathered Bedrock at Elev. 23.7 ft. R2: Gravel and short pieces of core predominately PHYLLITE. Gravel pieces rounded to angular. Rock Mass Quality = Very Poor.	
21.10	89.10	Bottom of Exploration at 89.10 feet below ground surface. Unable to salvage hole and to continue with boring.	

Remarks:

Stratification lines represent approximate boundaries between soil types; transitions may be gradual.
* Water level readings have been made at times and under conditions stated. Groundwater fluctuations may occur due to conditions other than those present at the time measurements were made.

Page 2 of 2 — Boring No.: BB-MUR-103

STATE OF MAINE
DEPARTMENT OF TRANSPORTATION
STP-2049(600)
WIN 20496.00
BRIDGE PLANS
3562

	BY	DATE
PROJ. MANAGER		
DESIGN-DETAILED		
CHECKED-REVIEWED		
DESIGN2-DETAILED2	L.KRUSINSKI T.WHITE	JUN 2015
DESIGN3-DETAILED3		
REVISIONS 1		
REVISIONS 2		
REVISIONS 3		
REVISIONS 4		
FIELD CHANGES		

SIGNATURE
P.E. NUMBER
DATE

GOODWIN BRIDGE
WEST BRANCH of the UNION RIVER
MARIAVILLE HANCOCK COUNTY

BORING LOGS

Filename: ...\MSTA\010_BORING LOGS2.dgn   Division: BRIDGE   Username: david.sullivan   Date:3/28/2016

Maine Department of Transportation

Soil/Rock Exploration Log
US CUSTOMARY UNITS

Project: Goodwin Bridge #3562 carries Route 181 over the West Branch of
Location: Mariaville, Maine

Boring No.: BB-MUR-104
WIN: 20496.00

Driller:	Northern Test Boring	Elevation (ft.)	109.7	Auger ID/OD:	N/A
Operator:	Mike/Drew	Datum:	NAVD88	Sampler:	Standard Split Spoon
Logged By:	B. Wilder	Rig Type:	Diedrich D-50	Hammer Wt./Fall:	140#/30"
Date Start/Finish:	10/20/2014-10/21/2014	Drilling Method:	Cased Wash Boring	Core Barrel:	NQ-2"
Boring Location:	16+13.5, 6.5 ft Rt.	Casing ID/OD:	HW	Water Level*:	None Observed
Hammer Efficiency Factor: 0.879		Hammer Type:	Automatic ☒ Hydraulic ☐ Rope & Cathead ☐		

Definitions:
D = Split Spoon Sample
MD = Unsuccessful Split Spoon Sample attempt
U = Thin Wall Tube Sample
MU = Unsuccessful Thin Wall Tube Sample attempt
V = Insitu Vane Shear Test, PP = Pocket Penetrometer
MV = Unsuccessful Insitu Vane Shear Test attempt
R = Rock Core Sample
SSA = Solid Stem Auger
HSA = Hollow Stem Auger
RC = Roller Cone
WOH = weight of 140lb. hammer
WOR/C = weight of rods or casing
WO1P = Weight of one person
S_u = Insitu Field Vane Shear Strength (psf)
T_v = Pocket Torvane Shear Strength (psf)
q_p = Unconfined Compressive Strength (ksf)
N-uncorrected = Raw field SPT N-value
Hammer Efficiency Factor = Annual Calibration Value
N_{60} = SPT N-uncorrected corrected for hammer efficiency
N_{60} = (Hammer Efficiency Factor/60%)*N-uncorrected
$S_{u(lab)}$ = Lab Vane Shear Strength (psf)
WC = water content, percent
LL = Liquid Limit
PL = Plastic Limit
PI = Plasticity Index
G = Grain Size Analysis
C = Consolidation Test

Depth (ft.)	Sample No.	Pen./Rec. (in.)	Sample Depth (ft.)	Blows (/6 in.) Shear Strength (psf) or RQD (%)	N-uncorrected	N_{60}	Casing Blows	Elevation (ft.)	Visual Description and Remarks	Laboratory Testing Results/ AASHTO and Unified Class.
0							SSA	109.37	4" PAVEMENT. —0.33 Similar soils to BB-MUR-105. No soil samples taken.	
20							80			
							58			
							64			
							69	86.70	—23.00	
							63			
25	1D/MV	24/14	25.00 - 27.00	1/1/2/1	3	4	OPEN HOLE		Failed 55x110 mm vane attempt, would not push. Grey, wet, soft, CLAY, some silt, trace sand, (Glaciomarine Deposit).	G#242922 A-6, CL WC=42.5% LL=39 PL=23 PI=16
30	2D V1	24/20	30.00 - 32.00 30.63 - 31.00	WOH/WOH/WOH/WOH Su=759/179 psf	---				Grey, wet, medium stiff, CLAY, some silt, (Glaciomarine Deposit). 55x110 mm vane raw torque readings: V1: 17.0/4.0 ft-lbs V2: 15.5/4.0 ft-lbs	G#242923 A-7-6, CL WC=34.8% LL=41 PL=25 PI=16
	V2		31.63 - 32.00	Su=692/179 psf						
35	1U	24/24	35.00 - 37.00	Piston Sampler					Grey, wet, medium stiff, Silty CLAY, trace fine sand, (Glaciomarine Deposit).	Triaxial G,C#242924 A-6, CL WC=38.6% LL=39 PL=22 PI=17
	V3		37.63 - 38.00	Su=670/179 psf					55x110 mm vane raw torque readings: V3: 15.0/4.0 ft-lbs	
	V4		38.63 - 39.00	Su=446/156 psf					V4: 10.0/3.5 ft-lbs	
40	3D V5	24/24	40.00 - 42.00 40.63 - 41.00	WOR/WOR/WOR/WOR Su=536/134 psf	---				Grey, wet, medium stiff, Silty CLAY, (Glaciomarine Deposit). 55x110 mm vane raw torque readings: V5: 12.0/3.0 ft-lbs V6: 15.0/3.5 ft-lbs	G#242925 A-6, CL WC=35.3% LL=34 PL=24 PI=10
	V6		41.63 - 42.00	Su=670/156 psf						
45	2U	24/24	45.00 - 47.00	Piston Sampler					Similar to above.	G,C#262087 A-6, CL WC=34.7% LL=33 PL=20 PI=13
	V7		47.63 - 48.00	Su=804/134 psf					55x110 mm vane raw torque readings: V7: 18.0/3.0 ft-lbs	
	V8		48.63 - 49.00	Su=759/134 psf					V8: 17.0-3.0 ft-lbs	
50	4D V9	24/24	50.00 - 52.00 50.63 - 51.00	WOR/WOR/WOR/WOR Su=536/156 psf	---				Similar to above 55x110 mm vane raw torque readings: V9: 12.0/3.5 ft-lbs V10: 15.0/3.5 ft-lbs	
	V10		51.63 - 52.00	Su=670/156 psf						
55	3U	24/20	55.00 - 57.00	Piston Sampler					Similar to above. Bottom 4" fell out of tube, possible sand layer.	
	V11		57.63 - 58.00	Su=1116/312 psf					55x110 mm vane raw torque readings: V11: 25.0/7.0 ft-lbs	
	V12		58.63 - 59.00	Su=1473/402 psf					V12: 33.0/9.0 ft-lbs	
60	5D	24/18	60.00 - 62.00	1/3/3/6	6	9			Grey, wet, stiff, Clayey SILT, some fine to medium sand, (Glaciomarine Deposit).	
								46.70	—63.00	
65	6D	24/19	65.00 - 67.00	2/3/4/10	7	10			Grey-brown, wet, loose, silty fine to medium SAND, (Submarine Sands).	
								43.20	—66.50	
70	7D		70.00 - 72.00	16/16/20/19	36	53			Grey, wet, very dense, Gravelly fine to coarse SAND, trace silt, (Glacial Till).	G#262088 A-1-a, SW-SM WC=9.1%
								37.70	—72.00 Bottom of Exploration at 72.00 feet below ground surface.	
75										

Remarks:
Auto hammer #283

Stratification lines represent approximate boundaries between soil types; transitions may be gradual.

* Water level readings have been made at times and under conditions stated. Groundwater fluctuations may occur due to conditions other than those present at the time measurements were made.

Page 1 of 1
Boring No.: BB-MUR-104

Maine Department of Transportation

Soil/Rock Exploration Log
US CUSTOMARY UNITS

Project: Goodwin Bridge #3562 carries Route 181 over the West Branch of
Location: Mariaville, Maine

Boring No.: BB-MUR-105
WIN: 20496.00

Driller:	Northern Test Boring	Elevation (ft.)	109.2	Auger ID/OD:	6.25" Hollow Stem
Operator:	Mike/Adam	Datum:	NAVD88	Sampler:	Standard Split Spoon
Logged By:	B. Wilder	Rig Type:	Diedrich D-50	Hammer Wt./Fall:	140#/30"
Date Start/Finish:	10/14/2014; 07:30-14:00	Drilling Method:	Cased Wash Boring	Core Barrel:	NQ-2"
Boring Location:	16+61, 6.4 ft Rt.	Casing ID/OD:	HW	Water Level*:	None Observed
Hammer Efficiency Factor: 0.801		Hammer Type:	Automatic ☒ Hydraulic ☐ Rope & Cathead ☐		

Definitions:
D = Split Spoon Sample
MD = Unsuccessful Split Spoon Sample attempt
U = Thin Wall Tube Sample
MU = Unsuccessful Thin Wall Tube Sample attempt
V = Insitu Vane Shear Test, PP = Pocket Penetrometer
MV = Unsuccessful Insitu Vane Shear Test attempt
R = Rock Core Sample
SSA = Solid Stem Auger
HSA = Hollow Stem Auger
RC = Roller Cone
WOH = weight of 140lb. hammer
WOR/C = weight of rods or casing
WO1P = Weight of one person
S_u = Insitu Field Vane Shear Strength (psf)
T_v = Pocket Torvane Shear Strength (psf)
q_p = Unconfined Compressive Strength (ksf)
N-uncorrected = Raw field SPT N-value
Hammer Efficiency Factor = Annual Calibration Value
N_{60} = SPT N-uncorrected corrected for hammer efficiency
N_{60} = (Hammer Efficiency Factor/60%)*N-uncorrected
$S_{u(lab)}$ = Lab Vane Shear Strength (psf)
WC = water content, percent
LL = Liquid Limit
PL = Plastic Limit
PI = Plasticity Index
G = Grain Size Analysis
C = Consolidation Test

Depth (ft.)	Sample No.	Pen./Rec. (in.)	Sample Depth (ft.)	Blows (/6 in.) Shear Strength (psf) or RQD (%)	N-uncorrected	N_{60}	Casing Blows	Elevation (ft.)	Visual Description and Remarks	Laboratory Testing Results/ AASHTO and Unified Class.
0							HSA	108.87	4" PAVEMENT. —0.33	
	1D	24/16	1.00 - 3.00	9/10/12/12	22	29			Brown, damp, medium dense, Gravelly fine to coarse SAND, trace silt, (Fill).	
5	2D	24/12	5.00 - 7.00	2/3/5/6	8	11			Brown, moist, medium dense, fine to coarse SAND, little gravel, trace silt, (Fill).	
								100.20	—9.00	
10	3D	24/18	10.00 - 12.00	2/1/1/1	2	3			Brown, wet, very loose, silty, fine to medium SAND, trace organics, (Alluvial Deposits).	
								94.70	—14.50	
15	4D	24/20	15.00 - 17.00	2/1/1/1	2	3	25		Grey-brown, wet, very loose, fine to coarse SAND, some silt, (Glaciomarine Deposit).	
							41	92.20	—17.00	
							84			
							86			
	5D	24/24	19.00 - 21.00	3/3/5/5	8	11	OPEN HOLE		Grey, wet, stiff , Clayey SILT, (Glaciomarine Deposit).	
	V1		24.63 - 25.00	Su=759/223 psf					55x110 mm vane raw torque readings: V1: 17.0/5.0 ft-lbs	
25	6D V2	24/14	25.00 - 27.00 25.63 - 26.00	Hydraulic Push Su=714/246 psf					Similar to above, medium stiff. V2: 16.0/5.5 ft-lbs	
	1U	24/24	29.00 - 31.00	Piston Sampler					Grey, wet, medium stiff, Silty CLAY, trace fine sand, (Glaciomarine Deposit).	G,C#262091 A-7-6, CL WC=43.7% LL=41 PL=22 PI=19
	V3		31.63 - 32.00	Su=714/223 psf					55x110 mm vane raw torque readings: V3: 16.0/5.0 ft-lbs	
	V4		32.63 - 33.00	Su=714/179 psf					V4: 16.0/4.0 ft-lbs	
	7D V5	24/24	34.00 - 36.00 34.63 - 35.00	WOR/WOR/WOR/WOR Su=714/179 psf	---				Grey, wet, medium stiff, Silty CLAY, (Glaciomarine Deposit). 55x110 mm vane raw torque readings: V5: 16.0/4.0 ft-lbs V6: 16.0/4.0 ft-lbs	G#262094 A-6, CL WC=29.4% LL=35 PL=22 PI=13
35	V6		35.63 - 36.00	Su=714/179 psf						
	2U	24/24	39.00 - 41.00	Piston Sampler					Similar to above.	
	V7		41.63 - 42.00	Su=759/134 psf					55x110 mm vane raw torque readings: V7: 17.0/3.0 ft-lbs	
	V8		42.63 - 43.00	Su=625/179 psf					V8: 14.0/4.0 ft-lbs	
	8D V9	24/24	44.00 - 46.00 44.63 - 45.00	WOR/WOR/WOR/WOR Su=714/179 psf	---				Grey, wet, medium stiff, Silty CLAY, trace sand, (Glaciomarine Deposit). 55x110 mm vane raw torque readings: V9: 16.0/4.0 ft-lbs V10: 14.0/4.5 ft-lbs	G#262095 A-4, CL WC=28.4% LL=30 PL=21 PI=9
45	V10		45.63 - 46.00	Su=625/201 psf						
	3U	24/24	49.00 - 51.00	Piston Sampler					Similar to above.	
	V11		51.63 - 52.00	Su=982/290 psf					55x110 mm vane raw torque readings: V11: 22.0/6.5 ft-lbs	
	V12		52.63 - 53.00	Su=1027/513 psf					V12: 23.0/11.5 ft-lbs	
	9D V13	24/24	54.00 - 56.00 54.63 - 55.00	WOR/WOR/WOR/WOR Su=1205/402 psf	---				Grey, wet, medium stiff to stiff, Silty CLAY, (Glaciomarine Deposit). 55x110 mm vane raw torque readings: V13: 27.0/9.0 ft-lbs V14: 32.0/9.0 ft-lbs	
55	V14		55.63 - 56.00	Su=1429/402 psf						
	4U	24/24	59.00 - 61.00	Piston Sampler					Similar to above.	
	MV		61.00 - 61.00					47.80	Failed 55x110 mm vane attempt, would not push. —61.40	
	10D	24/13	64.00 - 66.00	9/9/9/9	18	24			Grey, wet, medium dense, Gravelly fine to coarse SAND, little silt, (Glacial Till).	
	11D	24/15	69.00 - 71.00	12/10/12/10	22	29			Grey, wet, medium dense, fine to coarse SAND, some gravel, trace silt, (Glacial Till).	
								38.20	—71.00 Bottom of Exploration at 71.00 feet below ground surface.	
75										

Remarks:
Auto hammer #283

Stratification lines represent approximate boundaries between soil types; transitions may be gradual.

* Water level readings have been made at times and under conditions stated. Groundwater fluctuations may occur due to conditions other than those present at the time measurements were made.

Page 1 of 1
Boring No.: BB-MUR-105

Maine Department of Transportation

Soil/Rock Exploration Log
US CUSTOMARY UNITS

Project: Goodwin Bridge #3562 carries Route 181 over the West Branch of
Location: Mariaville, Maine

Boring No.: BB-MUR-106
WIN: 20496.00

Driller:	Northern Test Boring	Elevation (ft.)	108.5	Auger ID/OD:	6.25" Hollow Stem
Operator:	Mike/Adam	Datum:	NAVD88	Sampler:	Standard Split Spoon
Logged By:	B. Wilder	Rig Type:	Diedrich D-50	Hammer Wt./Fall:	140#/30"
Date Start/Finish:	10/14/2014; 07:30-14:00	Drilling Method:	Cased Wash Boring	Core Barrel:	NQ-2"
Boring Location:	17+11.3, 6.3 ft Rt.	Casing ID/OD:	HW	Water Level*:	None Observed
Hammer Efficiency Factor: 0.801		Hammer Type:	Automatic ☒ Hydraulic ☐ Rope & Cathead ☐		

Definitions:
D = Split Spoon Sample
MD = Unsuccessful Split Spoon Sample attempt
U = Thin Wall Tube Sample
MU = Unsuccessful Thin Wall Tube Sample attempt
V = Insitu Vane Shear Test, PP = Pocket Penetrometer
MV = Unsuccessful Insitu Vane Shear Test attempt
R = Rock Core Sample
SSA = Solid Stem Auger
HSA = Hollow Stem Auger
RC = Roller Cone
WOH = weight of 140lb. hammer
WOR/C = weight of rods or casing
WO1P = Weight of one person
S_u = Insitu Field Vane Shear Strength (psf)
T_v = Pocket Torvane Shear Strength (psf)
q_p = Unconfined Compressive Strength (ksf)
N-uncorrected = Raw field SPT N-value
Hammer Efficiency Factor = Annual Calibration Value
N_{60} = SPT N-uncorrected corrected for hammer efficiency
N_{60} = (Hammer Efficiency Factor/60%)*N-uncorrected
$S_{u(lab)}$ = Lab Vane Shear Strength (psf)
WC = water content, percent
LL = Liquid Limit
PL = Plastic Limit
PI = Plasticity Index
G = Grain Size Analysis
C = Consolidation Test

Depth (ft.)	Sample No.	Pen./Rec. (in.)	Sample Depth (ft.)	Blows (/6 in.) Shear Strength (psf) or RQD (%)	N-uncorrected	N_{60}	Casing Blows	Elevation (ft.)	Visual Description and Remarks	Laboratory Testing Results/ AASHTO and Unified Class.
0							HSA	108.17	4" PAVEMENT. —0.33	
	1D	24/14	1.00 - 3.00	7/12/10/10	22	29			Brown, damp, medium dense, Gravelly fine to coarse SAND, trace silt, (Fill).	
5	2D	24/15	5.00 - 7.00	4/4/5/5	9	12			Brown, damp, medium dense, fine to coarse SAND, little gravel, trace silt, (Fill). Organic layer from 6.8-7.0 ft bgs.	
								100.00	—8.50	
10	3D	24/19	10.00 - 12.00	2/2/1/1	3	4			Grey, wet, very loose, Silty SAND, trace gravel, (Glaciomarine Deposit).	G#262097 A-4, SM WC=37.9%
15	4D	24/13	15.00 - 17.00	2/4/2/2	6	8	30		Grey, wet, loose, Silty SAND, little clay, trace gravel, (Glaciomarine Sands) .	
							14			
							38			
							44	89.50	—19.00	
							62			
20	5D	24/20	20.00 - 22.00	4/4/3/4	7	9	OPEN HOLE		Grey, wet, stiff, Clayey SILT, trace fine sand, (Glaciomarine Deposit).	
25	6D/MU	24/13	25.00 - 27.00	WOR/WOR/WOR/WOR	---				Failed Tube attempt. Similar to above.	
30	1U	24/24	30.00 - 32.00	Piston Sampler					Similar to above.	
	V1		32.63 - 33.00	Su=670/134 psf					55x110 mm vane raw torque readings: V1: 15.0/3.0 ft-lbs	
	V2		33.63 - 34.00	Su=670/179 psf					V2: 15.0/4.0 ft-lbs	
35	7D V3	24/24	35.00 - 37.00 35.63 - 36.00	WOH/WOH/WOH/WOH Su=625/246 psf	---				Grey, wet, medium stiff, Silty CLAY, (Glaciomarine Deposit). 55x110 mm vane raw torque readings: V3: 14.0/5.5 ft-lbs V4: 14.0/4.0 ft-lbs	G#262098 A-6, CL WC=34.2% LL=32 PL=22 PI=10
	V4		36.63 - 37.00	Su=625/179 psf						
40	2U	24/24	40.00 - 42.00	Piston Sampler					Similar to above.	
	V5		42.63 - 43.00	Su=848/424 psf					55x110 mm vane raw torque readings: V5: 19.0/9.5 ft-lbs	
	MV		43.63 - 43.63						.5" sand layer at 43.6 ft bgs. Failed 55x110 mm vane attempt, would not push.	
45	8D V6	24/24	45.00 - 47.00 45.63 - 46.00	WOH/WOH/WOH/WOH Su=937/179 psf	---				Similar to above, medium stiff to stiff. 55x110 mm vane raw torque readings: V6: 21.0/4.0 ft-lbs V7: 23.0/7.0 ft-lbs	
	V7		46.63 - 47.00	Su=1027/312 psf						
50	9D/MV	24/15	50.00 - 52.00	6/13/13/7	26	35		58.30	Failed 55x110 mm vane attempt, would not push. —50.20 Brown, wet, dense, fine to coarse SAND, some gravel, little silt, (Submarine Sands).	
								54.50	—54.00	
55	10D	24/15	55.00 - 57.00	6/7/7/8	14	19			Grey, wet, medium dense, Gravelly fine to coarse SAND, trace silt, (Glacial Till).	
60	11D	24/13	60.00 - 62.00	17/6/5/8	11	15			Similar to above.	
								46.50	—62.00 Bottom of Exploration at 62.00 feet below ground surface.	
75										

Remarks:
Auto hammer #283

Stratification lines represent approximate boundaries between soil types; transitions may be gradual.

* Water level readings have been made at times and under conditions stated. Groundwater fluctuations may occur due to conditions other than those present at the time measurements were made.

Page 1 of 1
Boring No.: BB-MUR-106

STATE OF MAINE
DEPARTMENT OF TRANSPORTATION
STP-2049(600)
WIN 20496.00
BRIDGE PLANS
3562

	BY	DATE
PROJ. MANAGER		
DESIGN-DETAILED		
CHECKED-REVIEWED		
DESIGN2-DETAILED2	L.KRUSINSKI T.WHITE	JUN 2015
DESIGN3-DETAILED3		
REVISIONS 1		
REVISIONS 2		
REVISIONS 3		
REVISIONS 4		
FIELD CHANGES		

SIGNATURE
P.E. NUMBER
DATE

GOODWIN BRIDGE
WEST BRANCH of the UNION RIVER
MARIAVILLE HANCOCK COUNTY

BORING LOGS

Filename: ...\MSTA\011_BORING LOGS3.dgn Division: BRIDGE Username: david.sullivan Date:3/28/2016

Maine Department of Transportation — Soil/Rock Exploration Log — US CUSTOMARY UNITS

Project: Goodwin Bridge #3562 carries Route 181 over the West Branch of
Location: Mariaville, Maine

Boring No.: BB-MUR-201
WIN: 20496.00

Driller:	Northern Test Boring	Elevation (ft.)	102.5
Operator:	Mike/Adam	Datum	NAVD88
Logged By:	B. Wilder	Rig Type:	Diedrich D-50 Track
Date Start/Finish:	9/22/2015 10:00-16:30	Drilling Methods:	Cased Wash Boring
Boring Location:	14+03. 29.0 ft Lt.	Casing ID/OD:	HW
Hammer Efficiency Factor:	0.819	Hammer Type:	Automatic ☒ Hydraulic ☐ Rope & Cathead ☐
Auger ID/OD:	5" Solid Stem		
Sampler:	Standard Split Spoon		
Hammer Wt./Fall:	140#/30"		
Core Barrel:	NQ-2"		
Water Level*:	None Observed		

Definitions:
D = Split Spoon Sample
MD = Unsuccessful Split Spoon Sample attempt
U = Thin Wall Tube Sample
MU = Unsuccessful Thin Wall Tube Sample attempt
V = Insitu Vane Shear Test, PP = Pocket Penetrometer
MV = Unsuccessful Insitu Vane Shear Test attempt
R = Rock Core Sample
SSA = Solid Stem Auger
HSA = Hollow Stem Auger
RC = Roller Cone
WOH = weight of 140lb. hammer
WOR/C = weight of rods or casing
WO1P = Weight of one person
S_u = Insitu Field Vane Shear Strength (psf)
S_r = Pocket Torvane Shear Strength (psf)
q_p = Unconfined Compressive Strength (ksf)
N-uncorrected = Raw Field SPT N-value
Hammer Efficiency Factor = Annual Calibration Value
N_{60} = SPT N-uncorrected corrected for hammer efficiency
N_{60} = (Hammer Efficiency Factor/60%)*N-uncorrected
$S_{u(lab)}$ = Lab Vane Shear Strength (psf)
WC = water content, percent
LL = Liquid Limit
PL = Plastic Limit
PI = Plasticity Index
G = Grain Size Analysis
C = Consolidation Test

Depth (ft.)	Sample No.	Pen./Rec. (in.)	Sample Depth (ft.)	Blows (/6 in.) Shear Strength (psf) or RQD (%)	N-uncorrected	N_{60}	Casing Blows	Elevation (ft.)	Visual Description and Remarks	Laboratory Testing Results/ AASHTO and Unified Class
0	1D	24/20	0.00 - 2.00	1/1/3/4	4	6	55A		Brown, moist, loose, Silty, fine to coarse SAND, trace gravel.	
								98.50	4.00	
5	2D/A	24/22	5.00 - 7.00	4/8/10/11	18	26	25		2D (5.0-6.0 ft bgs) Brown, wet, very stiff, Clayey SILT, trace fine sand.	
								96.50	6.00	
							36		2D/A (6.0-7.0 ft bgs) Grey, wet, very stiff, Clayey SILT.	
							36			
							41			
10	3D/MV	24/24	9.00 - 11.00	2/2/3/4	5	7	49		Failed 55x110 mm vane attempt, would not push. Grey, wet, medium stiff, CLAY, some silt, trace sand.	GM211272 A-6. G1 WC=32.5% LL=39 PL=23 PI=16
							83			
							73	90.50	12.00	
							56			
							58			
15	1U	24/24	14.00 - 16.00	Hydraulic Push			OPEN HOLE		Grey, wet, soft, Silty CLAY.	#G.C 242682 A-6. G1 WC=34.1% LL=39 PL=22 PI=17
	V1		16.00 - 16.37	Su=1049/352 psf					55x110 mm vane raw torque readings: V1: 23.5/7.0 ft-lbs V2: 26.0/8.0 ft-lbs	
	V2		17.00 - 17.37	Su=1161/357 psf						
20	4D V3	24/24	19.00 - 21.00 19.00 - 20.00	WOR/WOH/1/3 Su=1116/357 psf	1	1			Grey, wet, medium stiff, Silty CLAY, trace fine sand. 55x110 mm vane raw torque readings: V3: 25.0/8.0 ft-lbs Failed 55x110 mm vane attempt, would not push.	GM211273 A-6. G1 WC=31.4% LL=35 PL=22 PI=13
	MV									
	5D V4	24/24	24.00 - 26.00 24.83 - 25.00	WOR/WOR/WOH/3 Su=1071/268 psf	---				Grey, wet, medium stiff, Silty CLAY, trace fine sand. 55x110 mm vane raw torque readings: V4: 24.0/6.0-0 ft-lbs	GM211274 A-6. G1 WC=32.4% LL=34 PL=22 PI=12
	MV								Failed 55x110 mm vane attempt, would not push.	
30	6D V5	24/24	29.00 - 31.00 29.00 - 30.00 30.63 - 31.00	WOR/WOR/WOR/3 Su=1205/357 psf	---				Grey, wet, stiff, Silty CLAY. 55x110 mm vane raw torque readings: V5: 28.0/8.0 ft-lbs V6: 27.0/8.0 ft-lbs	
	V6									
35	7D V7	24/24	34.00 - 36.00 34.00 - 35.00	WOR/3/4/4 Su=1473/446 psf	7	10		68.00	34.50	
	MV								Grey-brown, wet, stiff, Silty CLAY, trace fine sand. 55x110 mm vane raw torque readings: V7: 33.0/10.0 ft-lbs Failed 55x110 mm vane attempt, would not push.	
								65.20	37.30	
40	8D	24/11	39.00 - 41.00	8/7/7/8	14	21			Brown, wet, medium dense, Silty, fine to coarse SAND, trace gravel.	
45	9D	24/18	44.00 - 46.00	15/19/27/22	46	67		56.50	45.00	
									Dark grey, wet, very dense, fine to coarse SAND, trace gravel, trace silt.	
50									Bottom of Exploration at 46.00 feet below ground surface. NO REFUSAL	

Remarks:
Auto hammer #283

Stratification lines represent approximate boundaries between soil types; transitions may be gradual.
* Water level readings have been made at times and under conditions stated. Groundwater fluctuations may occur due to conditions other than those present at the time measurements were made.

Page 1 of 1
Boring No.: BB-MUR-201

Maine Department of Transportation — Soil/Rock Exploration Log — US CUSTOMARY UNITS

Project: Goodwin Bridge #3562 carries Route 181 over the West Branch of
Location: Mariaville, Maine

Boring No.: BB-MUR-202
WIN: 20496.00

Driller:	MaineDOT	Elevation (ft.)	91.7
Operator:	Giles/Doggett/Giles	Datum	NAVD88
Logged By:	B. Steven	Rig Type:	CME 45C
Date Start/Finish:	9/21/2015-9/22/2015	Drilling Methods:	Cased Wash Boring
Boring Location:	14+41.9, 6.1 ft Lt.	Casing ID/OD:	NW
Hammer Efficiency Factor:	0.908	Hammer Type:	Automatic ☒ Hydraulic ☐ Rope & Cathead ☐
Auger ID/OD:	5" Solid Stem		
Sampler:	NA		
Hammer Wt./Fall:	140#/30"		
Core Barrel:	NQ-2"		
Water Level*:	None Observed		

Definitions:
D = Split Spoon Sample
MD = Unsuccessful Split Spoon Sample attempt
U = Thin Wall Tube Sample
MU = Unsuccessful Thin Wall Tube Sample attempt
V = Insitu Vane Shear Test, PP = Pocket Penetrometer
MV = Unsuccessful Insitu Vane Shear Test attempt
R = Rock Core Sample
SSA = Solid Stem Auger
HSA = Hollow Stem Auger
RC = Roller Cone
WOH = weight of 140lb. hammer
WOR/C = weight of rods or casing
WO1P = Weight of one person
S_u = Insitu Field Vane Shear Strength (psf)
S_r = Pocket Torvane Shear Strength (psf)
q_p = Unconfined Compressive Strength (ksf)
N-uncorrected = Raw Field SPT N-value
Hammer Efficiency Factor = Annual Calibration Value
N_{60} = SPT N-uncorrected corrected for hammer efficiency
N_{60} = (Hammer Efficiency Factor/60%)*N-uncorrected
$S_{u(lab)}$ = Lab Vane Shear Strength (psf)
WC = water content, percent
LL = Liquid Limit
PL = Plastic Limit
PI = Plasticity Index
G = Grain Size Analysis
C = Consolidation Test

Depth (ft.)	Sample No.	Pen./Rec. (in.)	Sample Depth (ft.)	Blows (/6 in.) Shear Strength (psf) or RQD (%)	N-uncorrected	N_{60}	Casing Blows	Elevation (ft.)	Visual Description and Remarks	Laboratory Testing Results/ AASHTO and Unified Class
0							55A		Drove casing, washed and roller coned from 0' to 55.8' bgs. Samples were not retrieved in the overburden.	
5								85.70	6.00	
							29		Small amount of alluvial sands in wash water return. Then grey clay in wash water return. Washed ahead of Casing to 30.0 ft bgs.	
							29			
10							32			
							32			
	MV						---		Failed 55x110 mm vane attempt, would not push.	

							36			
							41			
15							26		Grey clay in wash water return.	

	V1		16.63 - 17.00	Su=446/134 psf			28		55x110 mm vane raw torque readings: V1: 10.0/3.0 ft-lbs V2: 15.0/3.0 ft-lbs	
	V2		17.63 - 18.00	Su=670/134 psf			33			
							33			
20							38			

	V3		21.63 - 22.00	Su=580/89 psf			39		55x110 mm vane raw torque readings: V3: 13.0/2.0 ft-lbs V4: 13.0/2.5 ft-lbs	
	V4		22.63 - 23.00	Su=580/112 psf			33			
							42			
25							30		Grey clay in wash water return	
							45			
							41			
							43			
							48			
30							46			

	V5		31.63 - 32.00	Su=558/134 psf			---		55x110 mm vane raw torque readings: V5: 12.5/3.0 ft-lbs V6: 19.0/4.0 ft-lbs	
	V6		32.63 - 33.00	Su=848/179 psf			---			
35							---			
							46			
							50			
							45			
							51			
							54		Grey clay in wash water return.	
							48			
40							54			
	V7		41.63 - 42.00	Su=1272/357 psf			46		55x110 mm vane raw torque readings: V7: 28.5/8.0 ft-lbs V8: 35.0/8.0 ft-lbs	
	V8		42.63 - 43.00	Su=1562/446 psf			53			
							62			
							68	47.20	44.50	
45							77		Brown wash water return at 44.5 ft bgs.	
							86			
							90			
							64			
							84		Gravel at 49.5 ft bgs Wash water return darker brown.	
50							134			
							RCA		Roller Coned ahead to 55.8 ft bgs.	
55	R1	24/16	55.80 - 57.80	RQD = 0%			NQ-2	36.20	55.50	
								35.90	Rusty Weathered ROCK fragments in wash. 55.80	
									Top of Intrack Bedrock at Elev. 35.9 ft. R1(Bedrock) Medium grey, fine grained, PHYLLITE, hard, very slightly weathered, highly fractured. Rock Mass Quality = Very Poor. R1(Core Times (minsec) 55.8-56.8 ft (9:33) 56.8-57.8 ft (Broke outer Core Barrel. No Recovery.	
								33.90	57.80	
60									Bottom of Exploration at 57.80 feet below ground surface. Core Barrel left in hole, broke casing and able to retrieve.	
65										
70										
75										

Remarks:
6" Concrete Bridge Deck
19.5 ft from Bridge Deck to Ground.

Stratification lines represent approximate boundaries between soil types; transitions may be gradual.
* Water level readings have been made at times and under conditions stated. Groundwater fluctuations may occur due to conditions other than those present at the time measurements were made.

Page 1 of 1
Boring No.: BB-MUR-202

Maine Department of Transportation — Soil/Rock Exploration Log — US CUSTOMARY UNITS

Project: Goodwin Bridge #3562 carries Route 181 over the West Branch of
Location: Mariaville, Maine

Boring No.: BB-MUR-203
WIN: 20496.00

Driller:	MaineDOT	Elevation (ft.)	90.7
Operator:	Giles/Doggett/Giles	Datum	NAVD88
Logged By:	B. Steven	Rig Type:	CME 45C
Date Start/Finish:	9/23/2015; 07:30-	Drilling Methods:	Cased Wash Boring
Boring Location:	15+13.2, 6.1 ft Lt.	Casing ID/OD:	NW & HW
Hammer Efficiency Factor:	0.908	Hammer Type:	Automatic ☒ Hydraulic ☐ Rope & Cathead ☐
Auger ID/OD:	N/A		
Sampler:	NA		
Hammer Wt./Fall:	140#/30"		
Core Barrel:	NQ-2"		
Water Level*:	None Observed		

Definitions:
D = Split Spoon Sample
MD = Unsuccessful Split Spoon Sample attempt
U = Thin Wall Tube Sample
MU = Unsuccessful Thin Wall Tube Sample attempt
V = Insitu Vane Shear Test, PP = Pocket Penetrometer
MV = Unsuccessful Insitu Vane Shear Test attempt
R = Rock Core Sample
SSA = Solid Stem Auger
HSA = Hollow Stem Auger
RC = Roller Cone
WOH = weight of 140lb. hammer
WOR/C = weight of rods or casing
WO1P = Weight of one person
S_u = Insitu Field Vane Shear Strength (psf)
S_r = Pocket Torvane Shear Strength (psf)
q_p = Unconfined Compressive Strength (ksf)
N-uncorrected = Raw Field SPT N-value
Hammer Efficiency Factor = Annual Calibration Value
N_{60} = SPT N-uncorrected corrected for hammer efficiency
N_{60} = (Hammer Efficiency Factor/60%)*N-uncorrected
$S_{u(lab)}$ = Lab Vane Shear Strength (psf)
WC = water content, percent
LL = Liquid Limit
PL = Plastic Limit
PI = Plasticity Index
G = Grain Size Analysis
C = Consolidation Test

Depth (ft.)	Sample No.	Pen./Rec. (in.)	Sample Depth (ft.)	Blows (/6 in.) Shear Strength (psf) or RQD (%)	N-uncorrected	N_{60}	Casing Blows	Elevation (ft.)	Visual Description and Remarks	Laboratory Testing Results/ AASHTO and Unified Class
0							29		Drove casing, washed and roller coned from 0' to 72.7' bgs. Samples were not retrieved in the overburden.	
							33			
							14			
							13		Brown SAND and wood in wash water return from 3.0-5.0 ft bgs.	
							21			
5							27	85.70	5.00	
							33		Silt in wash water return at 5.0 ft bgs.	
							33			
							39			
							32			
10							---			
	V1		10.63 - 11.00	Su=536/134 psf			4		Silt and gravel in wash water return at 9.5 ft bgs. Wash ahead to 15.0 ft bgs. 55x110 mm vane raw torque readings: V1: 12.0/3.0 ft-lbs V2: 12.0/3.0 ft-lbs SILT and GRAVEL lenses based on drilling behavior.	
	V2		11.63 - 12.00	Su=536/134 psf			8			
							6			
							9			

15							10		Washed ahead to 20.0 ft bgs. Failed 55x110 mm vane attempt would not push.	
	MV						14			
							15			
							13			

20							18		Failed 55x110 mm van attempt, gravel lenses, would not push. Wash return is clean. Gravel still in casing.	
	MV						18			
							19			
							22			

25	V3		25.63 - 26.00	Su=580/89 psf			42		55x110 mm vane raw torque readings: V3: 15.0/2.0 ft-lbs V4: 15.5/1.0 ft-lbs	
	V4		26.63 - 27.00	Su=692/45 psf			16			
							17		Grey silt in wash water return.	
							18			

30	V5		30.63 - 31.00	Su=536/89 psf			22		55x110 mm vane raw torque readings: V5: 12.0/2.0 ft-lbs V6: 18.0/1.0 ft-lbs	
	V6		31.63 - 32.00	Su=804/45 psf			19			
							23			
							22			
							27		Grey silt in wash water return.	
35							24			
							29			
							30			
							33			
							34			
40	V7		40.63 - 41.00	Su=1388/134 psf			22		Washed ahead to 50.0 ft bgs. 55x110 mm vane raw torque readings: V7: 31.0/3.0 ft-lbs V8: 25.0/4.5 ft-lbs	
	V8		41.63 - 42.00	Su=1116/201 psf			28			
							34			
							44			
							37		Grey silt based on wash water return.	
45							42			
							44			
							50			
							39			
50							55			

Remarks:
6" Concrete Bridge Deck
20.0 ft from Bridge Deck to Ground.

Stratification lines represent approximate boundaries between soil types; transitions may be gradual.
* Water level readings have been made at times and under conditions stated. Groundwater fluctuations may occur due to conditions other than those present at the time measurements were made.

Page 1 of 2
Boring No.: BB-MUR-203

Maine Department of Transportation — Soil/Rock Exploration Log — US CUSTOMARY UNITS

Project: Goodwin Bridge #3562 carries Route 181 over the West Branch of
Location: Mariaville, Maine

Boring No.: BB-MUR-203
WIN: 20496.00

Driller:	MaineDOT	Elevation (ft.)	90.7
Operator:	Giles/Doggett/Giles	Datum	NAVD88
Logged By:	B. Steven	Rig Type:	CME 45C
Date Start/Finish:	9/23/2015; 07:30-	Drilling Methods:	Cased Wash Boring
Boring Location:	15+13.2, 6.1 ft Lt.	Casing ID/OD:	NW & HW
Hammer Efficiency Factor:	0.908	Hammer Type:	Automatic ☒ Hydraulic ☐ Rope & Cathead ☐
Auger ID/OD:	N/A		
Sampler:	NA		
Hammer Wt./Fall:	140#/30"		
Core Barrel:	NQ-2"		
Water Level*:	None Observed		

Definitions:
D = Split Spoon Sample
MD = Unsuccessful Split Spoon Sample attempt
U = Thin Wall Tube Sample
MU = Unsuccessful Thin Wall Tube Sample attempt
V = Insitu Vane Shear Test, PP = Pocket Penetrometer
MV = Unsuccessful Insitu Vane Shear Test attempt
R = Rock Core Sample
SSA = Solid Stem Auger
HSA = Hollow Stem Auger
RC = Roller Cone
WOH = weight of 140lb. hammer
WOR/C = weight of rods or casing
WO1P = Weight of one person
S_u = Insitu Field Vane Shear Strength (psf)
S_r = Pocket Torvane Shear Strength (psf)
q_p = Unconfined Compressive Strength (ksf)
N-uncorrected = Raw Field SPT N-value
Hammer Efficiency Factor = Annual Calibration Value
N_{60} = SPT N-uncorrected corrected for hammer efficiency
N_{60} = (Hammer Efficiency Factor/60%)*N-uncorrected
$S_{u(lab)}$ = Lab Vane Shear Strength (psf)
WC = water content, percent
LL = Liquid Limit
PL = Plastic Limit
PI = Plasticity Index
G = Grain Size Analysis
C = Consolidation Test

Depth (ft.)	Sample No.	Pen./Rec. (in.)	Sample Depth (ft.)	Blows (/6 in.) Shear Strength (psf) or RQD (%)	N-uncorrected	N_{60}	Casing Blows	Elevation (ft.)	Visual Description and Remarks	Laboratory Testing Results/ AASHTO and Unified Class
50	MV						41		Failed 55x110 mm vane attempt, would not push.	
							49			
							59			
							66			
55							57			
							82			
							88			
							98			
							100			
							---	31.70	59.00	
60							---		Brown gravel and sand in wash water return. Roller Coned ahead to 65.0 ft bgs.	
							110			
							130			
							164			
65									Broke NW Casing at 65.0 ft bgs, pulled and switched to HW Casing. Roller Coned ahead to 72.7 ft bgs. Gravel and cobbles based on drilling behavior.	
70										
75	R1	60/24	72.70 - 77.70	RQD = 8%			NQ-2	18.00	72.70	
									Top of Bedrock at Elev. 18.0 ft. R1(Bedrock) Medium grey, fine grained, PHYLLITE, occasional calcite and feldspar inrrusions, fresh to slightly weathered, high angle and horizontal breaks, undulating, rough, fractured. Rock Mass Quality = Very Poor. R1(Core Times (minsec) 72.7-73.7 ft (11:49) 73.7-74.7 ft (8:06) 74.7-75.7 ft (10:07) 75.7-76.7 ft (11:06) 76.7-77.7 ft (9:10) 40% Recovery R2: Bedrock: Similar to R1 except abundant calcite and feldspar intrusions, less fractured, some joints with infilling. Rock Mass Quality = Poor. R2: Core Times not taken. 100% Recovery	
80										
								8.00	82.70	
									Bottom of Exploration at 82.70 feet below ground surface.	
85										
90										
95										
100										

Remarks:
6" Concrete Bridge Deck
20.0 ft from Bridge Deck to Ground.

Stratification lines represent approximate boundaries between soil types; transitions may be gradual.
* Water level readings have been made at times and under conditions stated. Groundwater fluctuations may occur due to conditions other than those present at the time measurements were made.

Page 2 of 2
Boring No.: BB-MUR-203

STATE OF MAINE
DEPARTMENT OF TRANSPORTATION

STP-2049(600)

WIN 20496.00

3562

BRIDGE PLANS

	BY	DATE	SIGNATURE
PROJ. MANAGER			
DESIGN-DETAILED			
CHECKED-REVIEWED			
DESIGN2-DETAILED2	L. KRUSINSKI	FEB 2016	P.E. NUMBER
DESIGN3-DETAILED3			
REVISIONS 1			
REVISIONS 2			DATE
REVISIONS 3			
REVISIONS 4			
FIELD CHANGES			

GOODWIN BRIDGE
WEST BRANCH of the UNION RIVER
MARIAVILLE HANCOCK COUNTY

BORING LOGS

SHEET NUMBER
11
OF 32

Maine Department of Transportation

Soil/Rock Exploration Log

US CUSTOMARY UNITS

Project:	Goodwin Bridge #3562 carries Route 181 over the West Branch of	Boring No.:	BB-MUR-204	WIN:	20496.00
Location:	Mariaville, Maine				
Driller:	Northern Test Boring	Elevation (ft.)	99.6	Auger ID/OD:	5" Soild Stem
Operator:	Mike/Adam	Datum:	NAVD88	Sampler:	Standard Split Spoon
Logged By:	B. Wilder	Rig Type:	Diedrich D-50 Track	Hammer Wt./Fall:	140#/30"
Date Start/Finish:	9/23/2015; 07:30-16:00	Drilling Method:	Cased Wash Boring	Core Barrel:	NQ-2"
Boring Location:	15+89.3, 60.4 ft Lt.	Casing ID/OD:	HW	Water Level*:	3.0 ft bgs
Hammer Efficiency Factor: 0.879		Hammer Type:	Automatic ☒ Hydraulic ☐ Rope & Cathead ☐		

Definitions:
D = Split Spoon Sample
MD = Unsuccessful Split Spoon Sample attempt
U = Thin Wall Tube Sample
MU = Unsuccessful Thin Wall Tube Sample attempt
V = Insitu Vane Shear Test, PP = Pocket Penetrometer
MV = Unsuccessful Insitu Vane Shear Test attempt
R = Rock Core Sample
SSA = Solid Stem Auger
HSA = Hollow Stem Auger
RC = Roller Cone
WOH = weight of 140lb. hammer
WOR/C = weight of rods or casing
WO1P = Weight of one person
S_u = Insitu Field Vane Shear Strength (psf)
T_v = Pocket Torvane Shear Strength (psf)
q_p = Unconfined Compressive Strength (ksf)
N-uncorrected = Raw field SPT N-value
Hammer Efficiency Factor = Annual Calibration Value
N_{60} = SPT N-uncorrected corrected for hammer efficiency
N_{60} = (Hammer Efficiency Factor/60%)*N-uncorrected
$S_{u(lab)}$ = Lab Vane Shear Strength (psf)
WC = water content, percent
LL = Liquid Limit
PL = Plastic Limit
PI = Plasticity Index
G = Grain Size Analysis
C = Consolidation Test

Depth (ft.)	Sample No.	Pen./Rec. (in.)	Sample Depth (ft.)	Blows (/6 in.) Shear Strength (psf) or RQD (%)	N-uncorrected	N_{60}	Casing Blows	Elevation (ft.)	Graphic Log	Visual Description and Remarks	Laboratory Testing Results/ AASHTO and Unified Class.
0	1D	24/24	0.00 - 2.00	1/WOH/WOH/1	---		SSA			Brown, wet, very loose, fine SAND, little silt.	
	2D	24/24	4.00 - 6.00	1/1/1/1	2	3	4			Brown, wet, very loose, fine SAND, little silt.	G#271277 A-2-4, SM WC=46.1%
5							4				
							3				
							5	92.10		7.50	
							10				
	3D/A	24/20	9.50 - 11.50	4/4/4/4	8	12	27			3D (9.5-10.5 ft bgs) Grey-brown, wet, medium dense, fine to coarse SAND, some gravel, some silt.	
10							12	89.10		10.50 3D/A (10.5-11.5 ft bgs) Grey, wet, medium stiff, Silty CLAY, trace fine sand.	
							27				
							37				
	4D	24/16	13.00 - 15.00	2/3/2/3	5	7	26			Grey, wet, medium stiff, Silty CLAY.	
							29				
15							39				
							36				
							35				
	5D V1	24/24	18.00 - 20.00 18.63 - 19.00	WOR/WOH/WOH/WOH Su=491/134 psf	---		OPEN HOLE			Grey, wet, soft, Silty CLAY, trace fine sand. 55x110 mm vane raw torque readings: V1: 11.0/3.0 ft-lbs	G#271275 A-6, CL WC=35.0% LL=34 PL=22 PI=12
	V2		19.63 - 20.00	Su=491/134 psf						V2: 11.0/3.0 ft-lbs	
20											
	6D V3	24/24	23.00 - 25.00 23.63 - 24.00	WOR/WOR/WOR/WOR Su=536/112 psf	---					Grey, wet, soft, Silty CLAY, trace fine sand. 55x110 mm vane raw torque readings: V3: 12.0/2.5 ft-lbs	G#271276 A-4, CL WC=33.7% LL=30 PL=21 PI=9
	V4		24.63 - 25.00	Su=536/134 psf						V4: 12.0/3.0 ft-lbs	
25											
	7D V5	24/24	28.00 - 30.00 28.63 - 29.00	WOR/WOR/1/WOR Su=848/89 psf	1	1				Grey, wet, medium stiff, Silty CLAY, trace fine sand. 55x110 mm vane raw torque readings: V5: 19.0/2.0 ft-lbs	
	MV									Failed 55x110 mm vane attempt, would not push.	
30											
	MD	3.6/0	33.00 - 33.30	50(3.6")				66.30		Failed sample attempt. 33.30 Cobble from 33.3 to 33.8 ft bgs.	
35											
	8D	24/18	38.00 - 40.00	4/4/4/5	8	12	89			Grey, wet, medium dense, Silty, fine to coarse SAND, some gravel, little clay. Set in HW Casing at 38.0 ft bgs.	
							60				
40							62				
							74				
							81				
	9D	24/24	43.00 - 45.00	11/14/5/7	19	28				Similar to above, except medium dense.	
45								54.60		45.00 Bottom of Exploration at 45.00 feet below ground surface. NO REFUSAL	
50											

Remarks:

Auto hammer #283

Stratification lines represent approximate boundaries between soil types; transitions may be gradual.

* Water level readings have been made at times and under conditions stated. Groundwater fluctuations may occur due to conditions other than those present at the time measurements were made.

Page 1 of 1

Boring No.: BB-MUR-204

Maine Department of Transportation

Soil/Rock Exploration Log

US CUSTOMARY UNITS

Project:	Goodwin Bridge #3562 carries Route 181 over the West Branch of	Boring No.:	BB-MUR-205	WIN:	20496.00
Location:	Mariaville, Maine				
Driller:	Northern Test Boring	Elevation (ft.)	100.5	Auger ID/OD:	5" Soild Stem
Operator:	Mike/Adam	Datum:	NAVD88	Sampler:	Standard Split Spoon
Logged By:	B. Wilder	Rig Type:	Diedrich D-50 Track	Hammer Wt./Fall:	140#/30"
Date Start/Finish:	9/24/2015; 07:00-15:30	Drilling Method:	Cased Wash Boring	Core Barrel:	NQ-2"
Boring Location:	16+16.1, 54.0 ft Lt.	Casing ID/OD:	HW	Water Level*:	2.8 ft bgs
Hammer Efficiency Factor: 0.879		Hammer Type:	Automatic ☒ Hydraulic ☐ Rope & Cathead ☐		

Definitions:
D = Split Spoon Sample
MD = Unsuccessful Split Spoon Sample attempt
U = Thin Wall Tube Sample
MU = Unsuccessful Thin Wall Tube Sample attempt
V = Insitu Vane Shear Test, PP = Pocket Penetrometer
MV = Unsuccessful Insitu Vane Shear Test attempt
R = Rock Core Sample
SSA = Solid Stem Auger
HSA = Hollow Stem Auger
RC = Roller Cone
WOH = weight of 140lb. hammer
WOR/C = weight of rods or casing
WO1P = Weight of one person
S_u = Insitu Field Vane Shear Strength (psf)
T_v = Pocket Torvane Shear Strength (psf)
q_p = Unconfined Compressive Strength (ksf)
N-uncorrected = Raw field SPT N-value
Hammer Efficiency Factor = Annual Calibration Value
N_{60} = SPT N-uncorrected corrected for hammer efficiency
N_{60} = (Hammer Efficiency Factor/60%)*N-uncorrected
$S_{u(lab)}$ = Lab Vane Shear Strength (psf)
WC = water content, percent
LL = Liquid Limit
PL = Plastic Limit
PI = Plasticity Index
G = Grain Size Analysis
C = Consolidation Test

Depth (ft.)	Sample No.	Pen./Rec. (in.)	Sample Depth (ft.)	Blows (/6 in.) Shear Strength (psf) or RQD (%)	N-uncorrected	N_{60}	Casing Blows	Elevation (ft.)	Graphic Log	Visual Description and Remarks	Laboratory Testing Results/ AASHTO and Unified Class.
0	1D	24/24	0.00 - 2.00	1/WOH/WOH/1	---		SSA			Brown, wet, very loose, Silty, fine SAND.	
5	2D	24/20	5.00 - 7.00	1/1/1/2	2	3	HP			Brown, wet, very loose, Silty, fine SAND. HP = Hydraulic Push	G#271278 A-4, SM WC=3.0%
	3D	24/16	9.00 - 11.00	2/2/6/4	8	12	11	91.00		9.50 Grey, wet, medium dense, fine to coarse SAND, little gravel, little silt, trace organics.	
10							33	89.50		11.00	
							35				
							38				
	4D	24/18	13.00 - 15.00	1/2/3/4	5	7	40			Grey, wet, medium stiff, Silty CLAY, trace sand.	G#271279 A-6, CL WC=27.2% LL=37 PL=24 PI=13
							37				
15							41				
							56				
							56				
	1U	24/16	18.00 - 20.00	Hydraulic Push			OPEN HOLE				#G.C 242683 A-6, CL WC=33.5% LL=37 PL=20 PI=17
20	V1		20.00 - 20.37	Su=491/134 psf						55x110 mm vane raw torque readings: V1: 11.0/3.0 ft-lbs	
	V2		21.00 - 21.37	Su=446/134 psf						V2: 10.0/3.0 ft-lbs	
	2U	24/24	22.00 - 24.00	WOH/WOH/WOH/WOH	---					Grey, wet, soft, Silty CLAY.	
	V3		24.00 - 24.37	Su=446/89 psf						55x110 mm vane raw torque readings: V3: 10.0/2.0 ft-lbs	
25	V4		25.00 - 25.37	Su=491/89 psf						V4: 11.0/2.0 ft-lbs	
	5D V5	24/24	28.00 - 30.00 28.63 - 29.00	WOR/WOR/WOR/WOR Su=536/45 psf	---					Grey, wet, soft, Silty CLAY, trace sand, trace gravel. 55x110 mm vane raw torque readings: V5: 12.0/1.0 ft-lbs	G#271280 A-4, CL WC=29.4% LL=29 PL=20 PI=9
	V6		29.63 - 30.00	Su=536/89 psf						V6: 12.0/2.0 ft-lbs	
30											
	6D/MV	24/24	33.00 - 35.00	1/1/3/3	4	6		67.50		33.00 Grey, wet, stiff, Silty CLAY, little fine SAND. Failed 55x110 mm vane attempt, would not push.	
35											
								63.20		37.30	
	MD	24/0	38.00 - 40.00	3/3/3/2	6	9				Grey, wet, loose, fine to coarse SAND, little gravel, little silt, (from wash water).	
40											
	7D	24/24	43.00 - 45.00	6/7/7/12	14	21				Grey, wet, medium dense, fine to coarse SAND, little silt, little gravel, trace clay.	
45								55.50		45.00 Bottom of Exploration at 45.00 feet below ground surface. NO REFUSAL	
50											

Remarks:

Auto hammer #283

Stratification lines represent approximate boundaries between soil types; transitions may be gradual.

* Water level readings have been made at times and under conditions stated. Groundwater fluctuations may occur due to conditions other than those present at the time measurements were made.

Page 1 of 1

Boring No.: BB-MUR-205

STATE OF MAINE
DEPARTMENT OF TRANSPORTATION

STP-2049(600)

WIN
20496.00

BRIDGE PLANS

3562

	BY	DATE
PROJ. MANAGER		
DESIGN-DETAILED		
CHECKED-REVIEWED	L.KRUSINSKI	
DESIGN2-DETAILED2	T.WHITE	FEB 2016
DESIGN3-DETAILED3		
REVISIONS 1		
REVISIONS 2		
REVISIONS 3		
REVISIONS 4		
FIELD CHANGES		

SIGNATURE

P.E. NUMBER

DATE

GOODWIN BRIDGE
WEST BRANCH of the UNION RIVER
MARIAVILLE HANCOCK COUNTY

BORING LOGS

SHEET NUMBER

12

OF 32

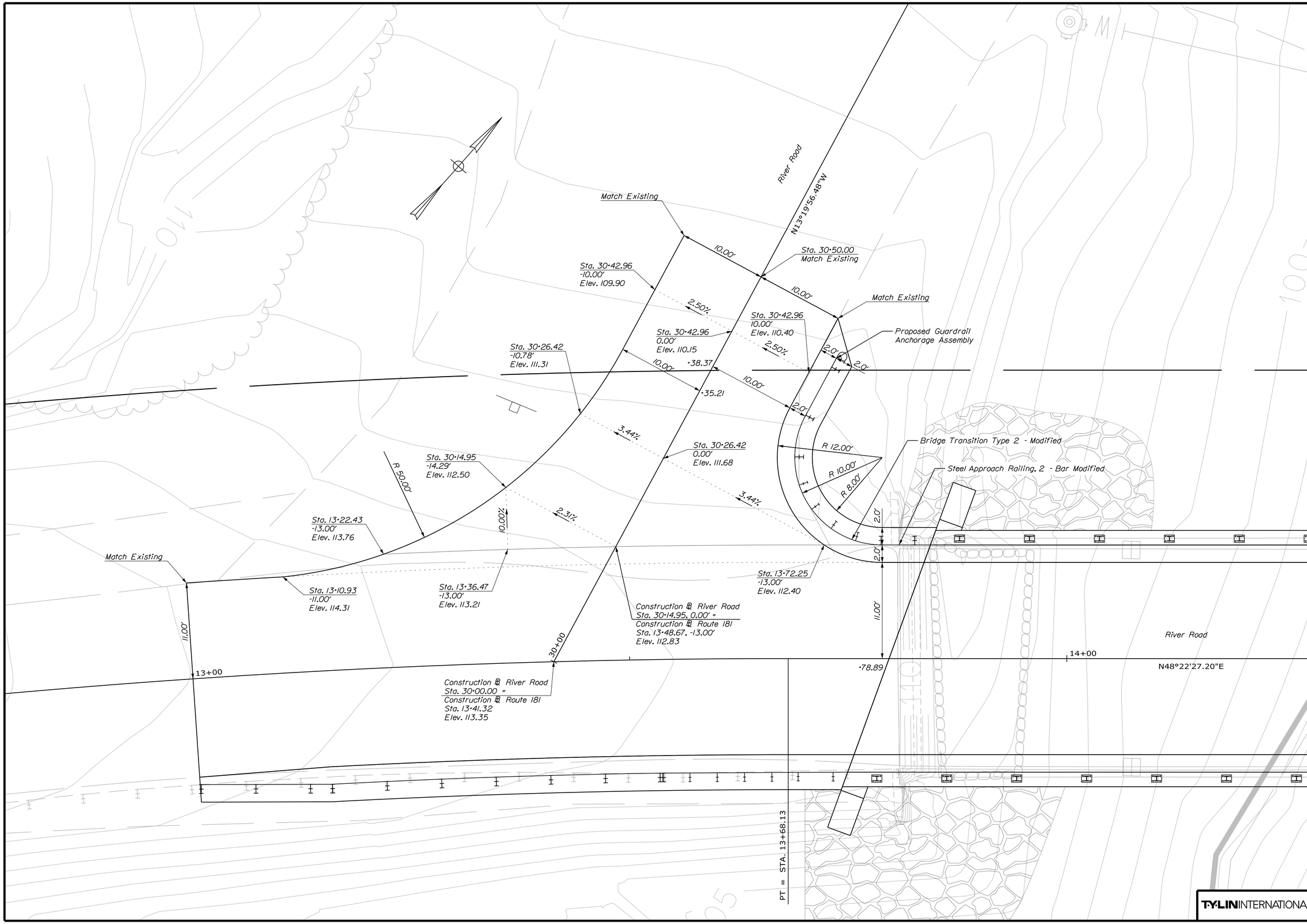

STATE OF MAINE
DEPARTMENT OF TRANSPORTATION

STP-2049(600)

WIN 20496.00

BRIDGE NO. 3562

BRIDGE PLANS

STATE OF MAINE
DANIEL S. MYERS
No. 12572
LICENSED
PROFESSIONAL ENGINEER

Daniel S. Myers	12572	P.E. NUMBER
	SIGNATURE	March 28, 2016
		DATE

PROJ. MANAGER	Michael Wright	BY	DATE
DESIGN-DETAILED	T. Kelley	T. Kelley	9/15
CHECKED-REVIEWED	H. Cowan	R. Hebert	9/15
DESIGN2-DETAILED2			
DESIGN3-DETAILED3			
REVISIONS 1			
REVISIONS 2			
REVISIONS 3			
REVISIONS 4			
FIELD CHANGES			

GOODWIN BRIDGE
OVER WEST BRANCH UNION RIVER
MARIAVILLE HANCOCK COUNTY

INTERSECTION GEOMETRY AND GRADING PLAN

SHEET NUMBER

13

OF 32

Filename: ...\00\HIGHWAY\MSTA\013_HDGeom.dgn Division: HIGHWAY Username: Date:3/28/2016

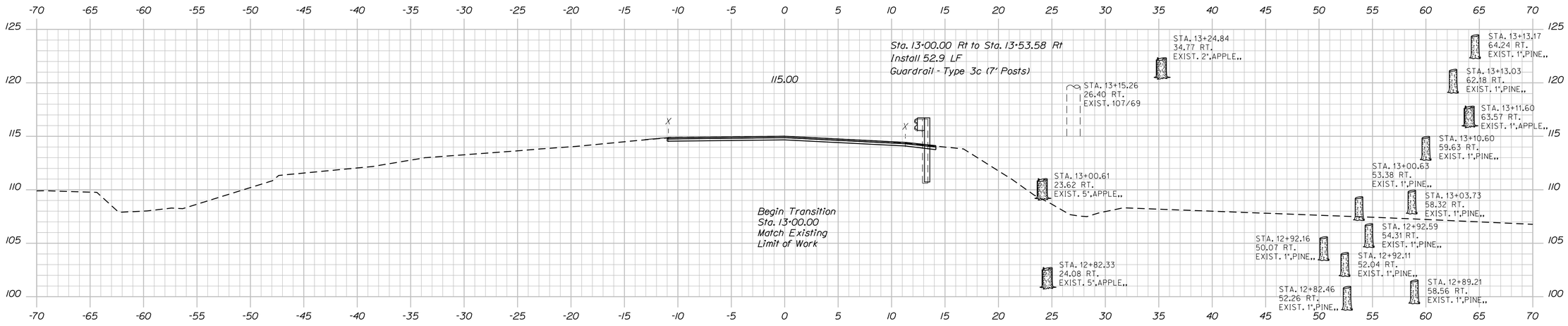

13+00.00

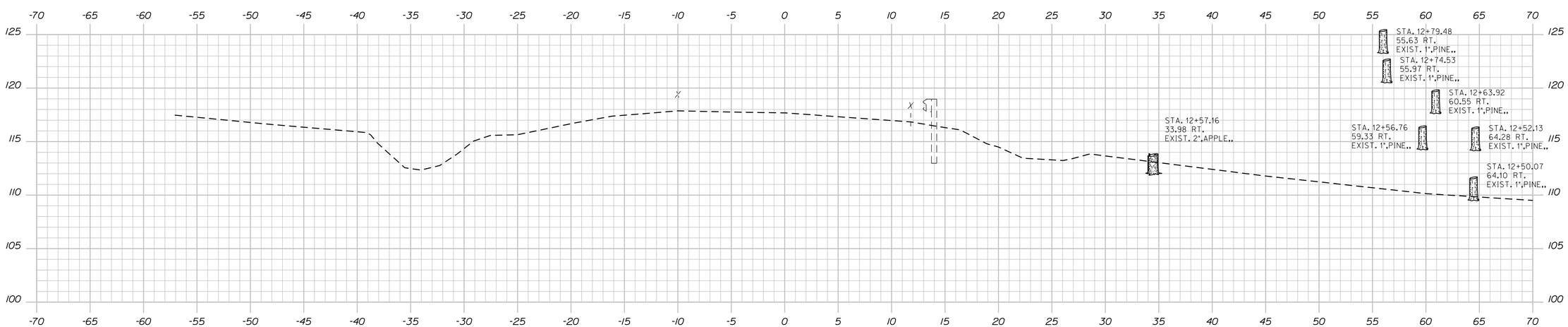

12+50.00

T·Y·LIN INTERNATIONAL

STATE OF MAINE
DEPARTMENT OF TRANSPORTATION

STP-2049(600)

WIN 20496.00

BRIDGE NO. 3562

BRIDGE PLANS

STATE OF MAINE
DANIEL S. MYERS
No. 12572
LICENSED
PROFESSIONAL ENGINEER

		12572	P.E. NUMBER
		March 28, 2016	DATE
		SIGNATURE	

PROJ. MANAGER	Michael Wight		
DESIGN-DETAILED	T. Kelley	T. Kelley	9/15
CHECKED-REVIEWED	H. Cowan	R. Hebert	9/15
DESIGN2-DETAILED2			
DESIGN3-DETAILED3			
REVISIONS 1			
REVISIONS 2			
REVISIONS 3			
REVISIONS 4			
FIELD CHANGES			

GOODWIN BRIDGE
OVER WEST BRANCH UNION RIVER
MARIAVILLE HANCOCK COUNTY

CROSS SECTIONS

SHEET NUMBER

14

OF 32

Sta. 12+50.00 to Sta. 13+00.00

Date:3/28/2016 Username: Division: HIGHWAY Filename: ...\MSTA\014-016_XSections-01.dgn

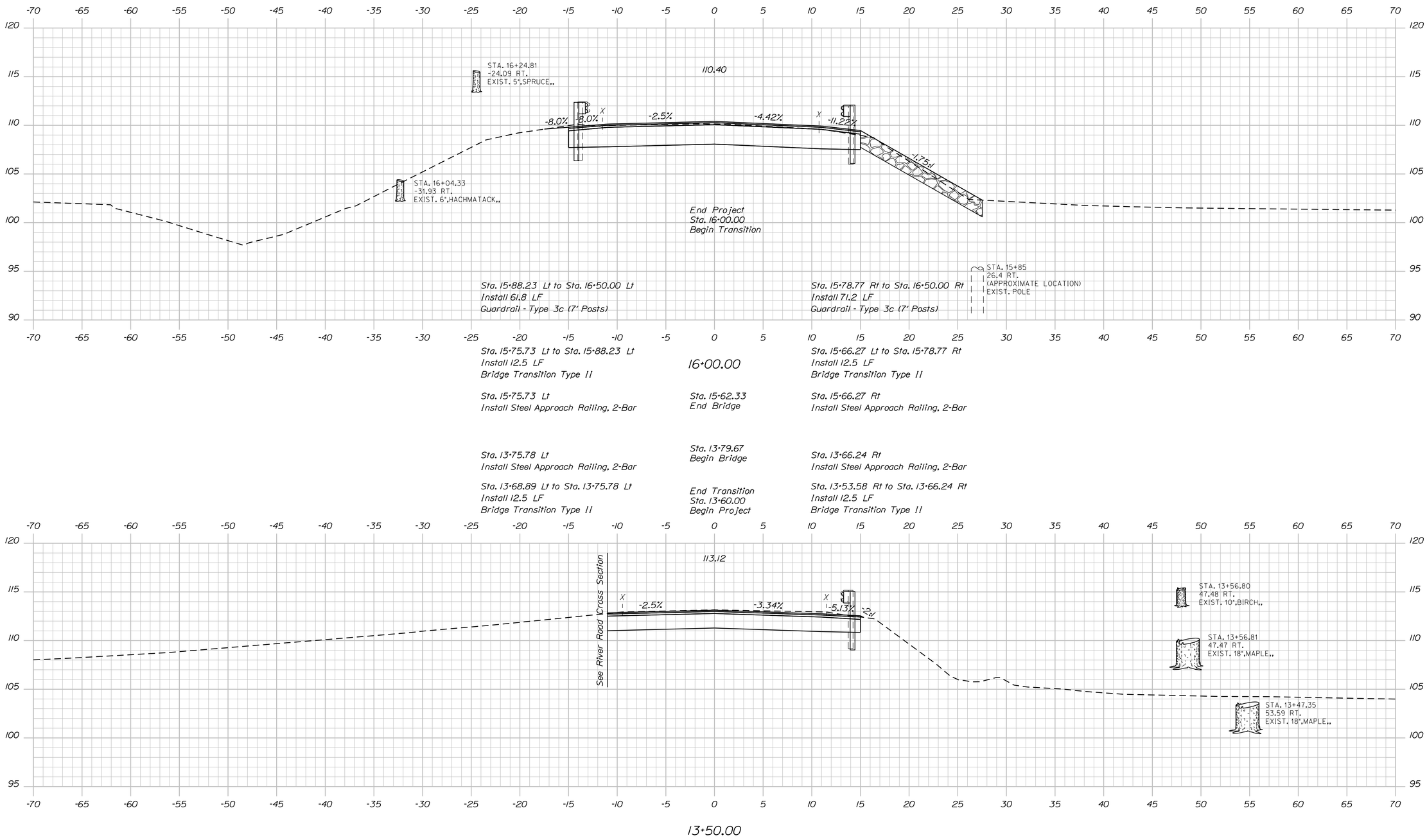

STATE OF MAINE
DEPARTMENT OF TRANSPORTATION

STP-2049(600)

WIN 20496.00

BRIDGE PLANS

BRIDGE NO. 3562

STATE OF MAINE
DANIEL S. MYERS
No. 12572
LICENSED
PROFESSIONAL ENGINEER

Daniel S. Myers	12572	P.E. NUMBER	
	SIGNATURE	March 28, 2016	
		DATE	

PROJ. MANAGER	Michael Wight	BY	DATE
DESIGN-DETAILED	T. Kelley	T. Kelley	9/15
CHECKED-REVIEWED	H. Cowan	R. Hebert	9/15
DESIGN2-DETAILED2			
DESIGN3-DETAILED3			
REVISIONS 1			
REVISIONS 2			
REVISIONS 3			
REVISIONS 4			
FIELD CHANGES			

GOODWIN BRIDGE
OVER WEST BRANCH UNION RIVER
MARIAVILLE HANCOCK COUNTY

CROSS SECTIONS

SHEET NUMBER

15

OF 32

T·Y·LIN INTERNATIONAL

Sta. 13+50.00 to Sta. 16+00.00

Date:3/28/2016 Division: HIGHWAY Username:

Filename: ...\MSTA\014-016_XSections-01.dgn

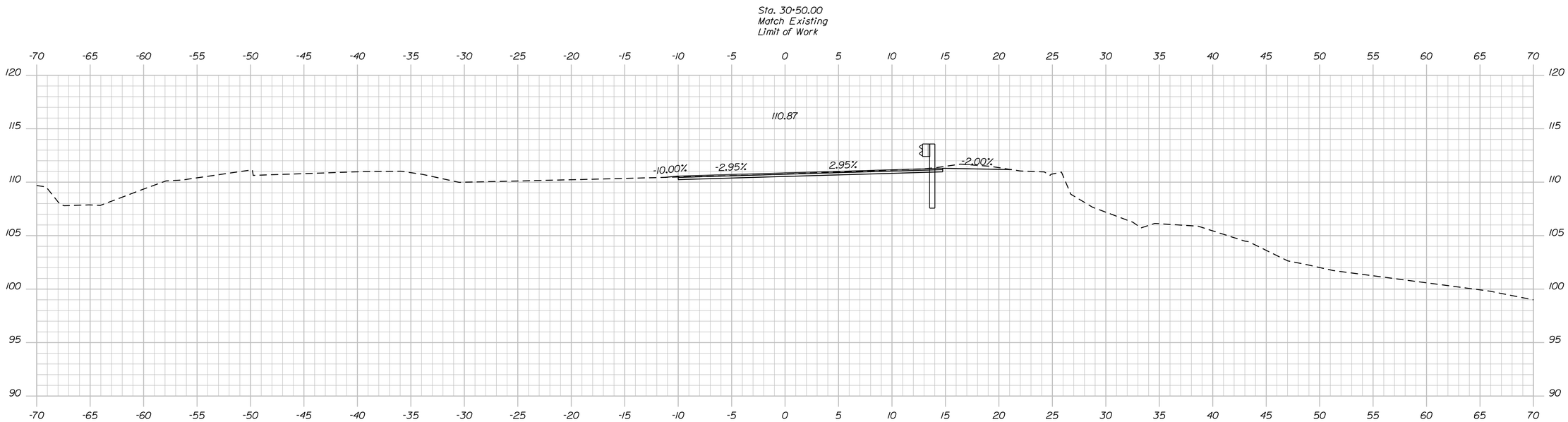

River Road: Sta. 30+35.00 (Representative Cross Section)

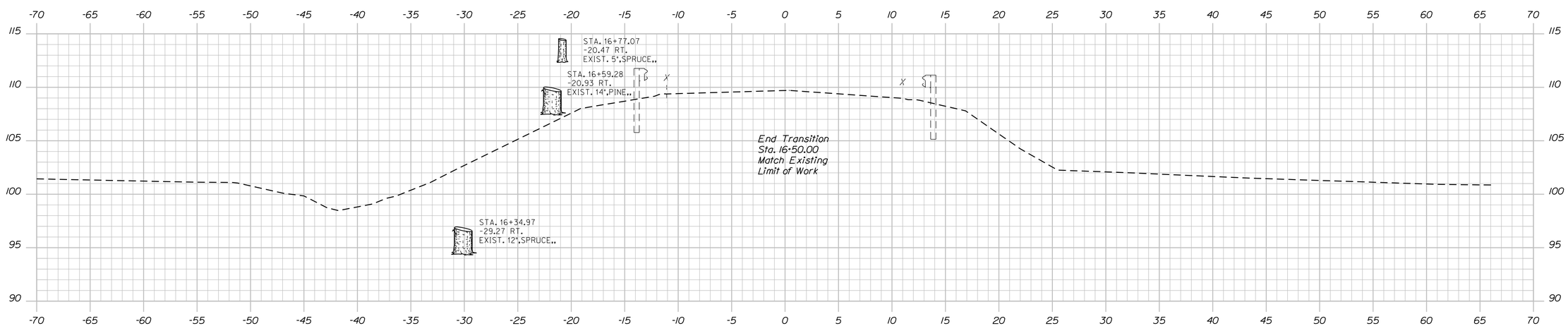

16+50.00

STATE OF MAINE
DEPARTMENT OF TRANSPORTATION

STP-2049(600)

WIN 20496.00

BRIDGE NO. 3562

BRIDGE PLANS

STATE OF MAINE
DANIEL S. MYERS
No. 12572
LICENSED
PROFESSIONAL ENGINEER

PROJ. MANAGER	Michael Wight	BY	DATE
DESIGN-DETAILED	T. Kelley	T. Kelley	9/15
CHECKED-REVIEWED	H. Cowan	R. Hebert	9/15
DESIGN2-DETAILED2			
DESIGN3-DETAILED3			
REVISIONS 1			
REVISIONS 2			
REVISIONS 3			
REVISIONS 4			
FIELD CHANGES			

SIGNATURE

12572
P.E. NUMBER

March 28, 2016
DATE

GOODWIN BRIDGE
OVER WEST BRANCH UNION RIVER
MARIAVILLE HANCOCK COUNTY

CROSS SECTIONS

SHEET NUMBER
16
OF 32

T·Y·LIN INTERNATIONAL

Sta. 16+50.00 (Rte 181) and Sta. 30+35.00 (River Rd)

Filename: ...\MSTA\014-016_XSections-01.dgn Division: HIGHWAY Username: Date:3/28/2016

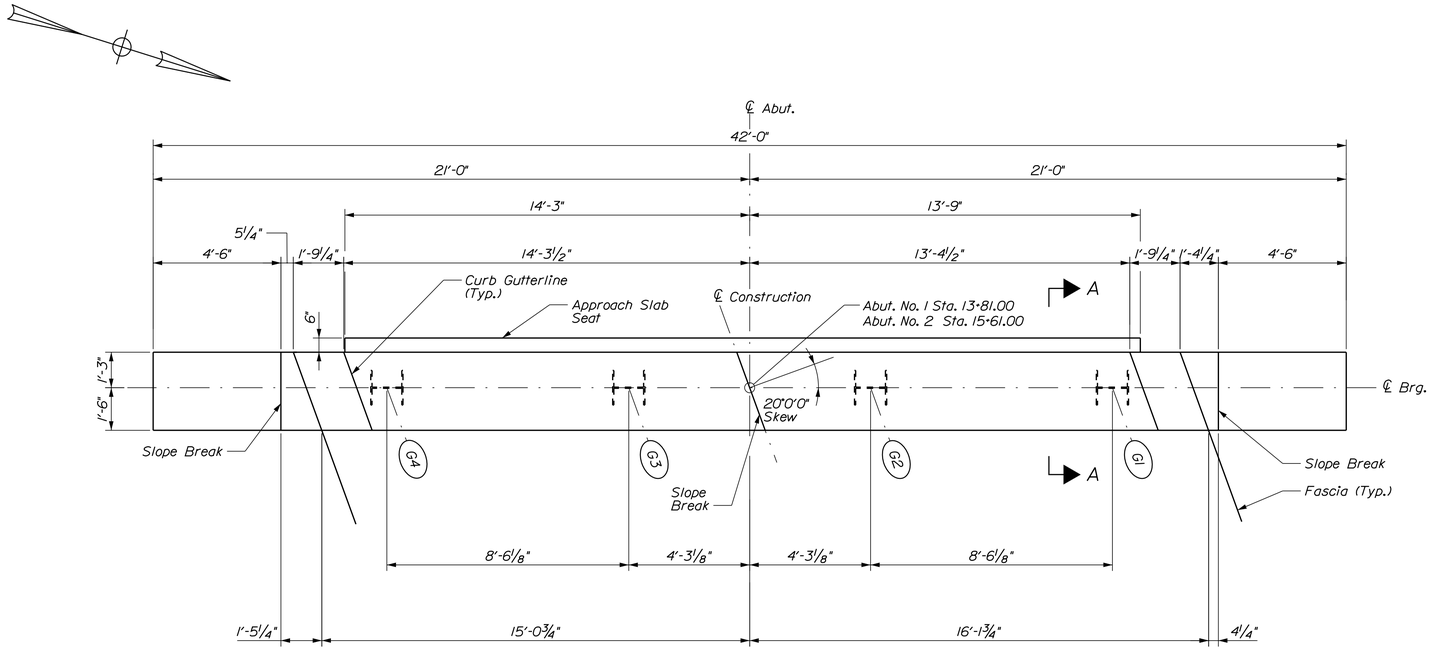

ABUTMENT - PLAN

(Abutment No. 1 Shown, Abutment No. 2 Similar)

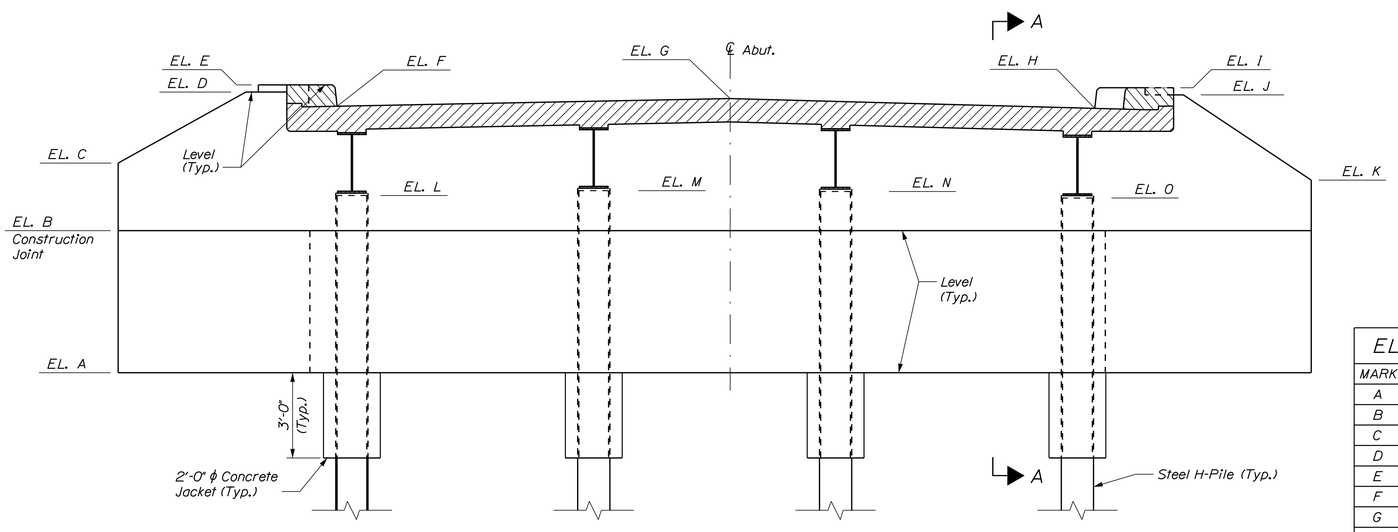

ABUTMENT - ELEVATION

(Abutment No. 1 shown, Abutment No. 2 similar)
(All elevations are at back face of abutment except pile-cut off elevations, which are at ℄ Brg.)
(End Diaphragms not shown for clarity)

ELEVATION TABLE

MARK	ABUT NO. 1	ABUT NO. 2
A	103.00	101.25
B	108.00	106.25
C	110.38	108.45
D	112.88	110.95
E	113.13	111.20
F	112.38	110.45
G	112.65	110.83
H	112.28	110.55
I	113.03	111.30
J	112.78	111.05
K	109.78	108.05
L	109.24	107.35
M	109.41	107.58
N	109.38	107.61
O	109.15	107.44

ABUTMENT NOTES:

1. See "Abutment Section" Sheet for Section A-A Typical Abutment Section.
2. Reinforcing steel shall have a minimum concrete cover of 2" unless otherwise noted.
3. Structural Earth Excavation, Abutments and Retaining Walls, required more than 12 inches below the bottom of the structure, will be paid for in accordance with Standard Specifications Section 206, Structural Excavation.
4. Payment for the concrete jacket around the tops of the H-Piles will not be paid for directly. Payment will be incidental to Pay Item 502.219, Structural Concrete Abutment and Retaining Walls. Fill concrete may be used for the concrete jackets.
5. Cover Joints where waterstops are not required in accordance with Standard Detail 502(01).
6. Construct French Drains behind the abutments and wingwalls in accordance with Standard Specifications Section 512, French Drains.
7. Abutments and Wingwalls shall be back filled with Granular Borrow Material for Underwater Backfill. Pay limits will be in accordance with Section A-A Typical Abutment Section on "Abutment Section" Sheet.

PILE NOTES:

1. H-Pile material shall be ASTM A572, Grade 50.
2. The maximum calculated factored axial pile loads are:
   - Abutment No. 1: 235 kips
   - Pier No. 1: 305 kips
   - Pier No. 2: 305 kips
   - Abutment No. 2: 235 kips
3. Estimate of piles required:
   - Abutment No. 1: 4 ~ HP 14x89 @ 56 ft
   - Pier No. 1: 4 ~ HP 14x117 @ 72 ft
   - Pier No. 2: 4 ~ HP 14X117 @ 89 ft
   - Abutment No. 2: 4 ~ HP 14x89 @ 84 ft
4. Piles shall not be out of position shown by more than 2 inches in any direction.
5. The Contractor shall perform and submit one (1) wave equation analysis for review and acceptance by the Resident for the abutments and the piers (2 total). The maximum allowable driving stress is 0.90 times Fy. The submittal analysis shall include the proposed stopping criteria based on the wave equation analysis and the proposed driving system. The stopping criteria shall include the blows per inch and the number of 1 inch intervals at which pile installation may be terminated. The cost of performing the wave equation analyses will be considered incidental to Item No. 501.92, Pile Driving Equipment Mobilization.
6. The Contractor shall perform one (1) dynamic load test at each substructure location to confirm the ultimate capacity of the piles. The required nominal resistance for the pile is the factored axial pile load divided by a resistance factor of 0.65 per the LFRD Specifications. The dynamic test shall be conducted on the first production pile driven at each substructure.
7. All piles shall be equiped with a pile tip in accordance with Standard Specification Section 501.10, Prefabricated Pile Tips.
8. Payment for Pile Cap Plates will be incidental to related Pile Pay Items.
9. All FRP Casings shall be filled with Class A Concrete. Concrete for filling FRP Casings and reinforcing within or extending from the FRP Casings will be considered incidental to related pay items.
10. Holes shall be drilled in the pier piles after installation to allow placement of two longitudinal reinforcing bars. Payment shall be considered incidental to related pay items.
11. The Contractor shall take care to prevent damage to the FRP Casings during driving activities. All driving frames shall be lined to help prevent damage to the casing surface. Driving frame liners shall be approved by the Resident.

T·Y·LIN INTERNATIONAL

STATE OF MAINE
DEPARTMENT OF TRANSPORTATION

STP-2049(600)

WIN 20496.00

BRIDGE NO. 3562

BRIDGE PLANS

STATE OF MAINE
DANIEL S. MYERS
No. 12572
LICENSED
PROFESSIONAL ENGINEER

PROJ. MANAGER	Michael Wight		
DESIGN-DETAILED	D. Myers	P. McClure	9/15
CHECKED-REVIEWED	R. Hebert	R. Hebert	9/15
DESIGN2-DETAILED2			
DESIGN3-DETAILED3			
REVISIONS 1			
REVISIONS 2			
REVISIONS 3			
REVISIONS 4			
FIELD CHANGES			

SIGNATURE
12572
P.E. NUMBER
March 28, 2016
DATE

GOODWIN BRIDGE
OVER WEST BRANCH UNION RIVER
MARIAVILLE HANCOCK COUNTY

ABUTMENT
PLAN & ELEVATION

SHEET NUMBER
17
OF 32

Filename: ...\017_Abut_Plan_Elevation.dgn Division: HIGHWAY Username: Date:3/28/2016

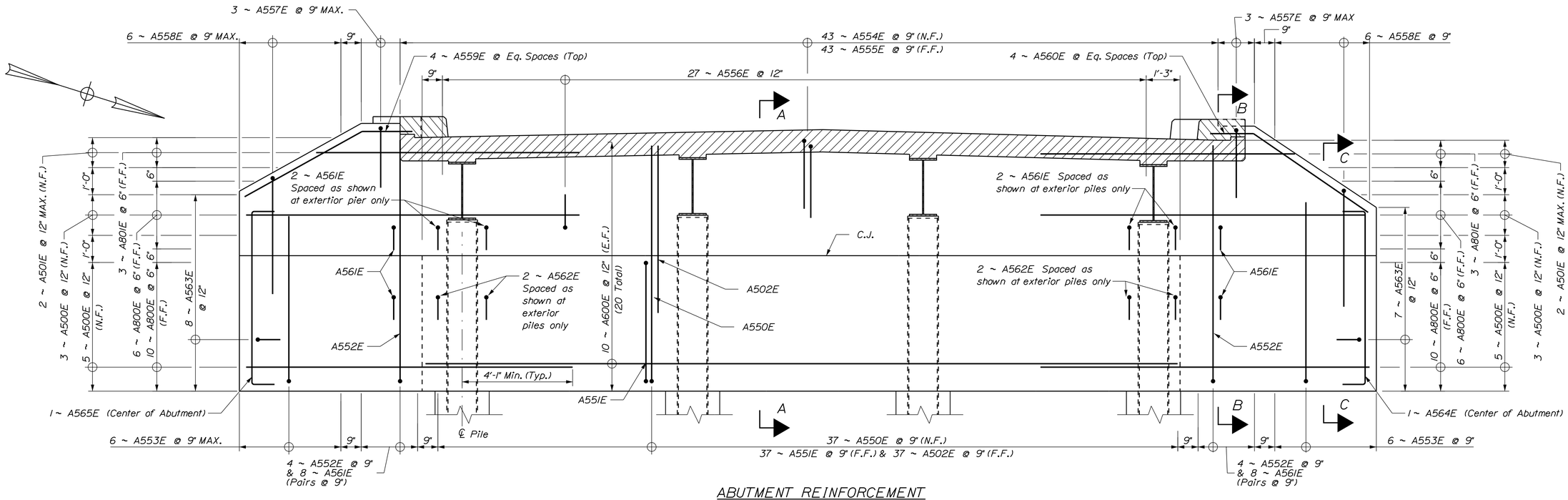

ABUTMENT REINFORCEMENT

Abutment No. 1 Shown, Abutment No. 2 Similar (Reinforcement labeled BXXXE
Deck Reinforcement not Shown for Clarity
Space Reinforcement to Avoid Piles

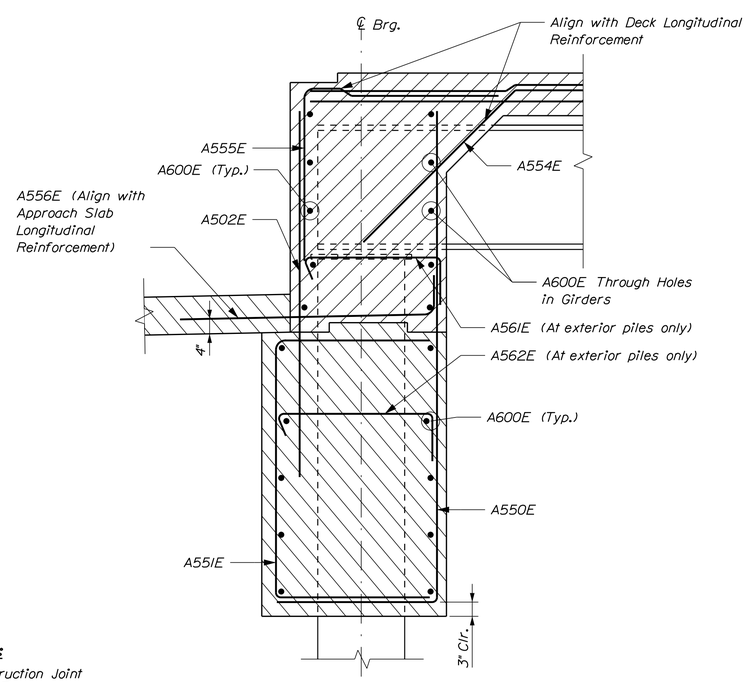

SECTION A-A

Deck Transverse Reinforcement not Shown for Clarity

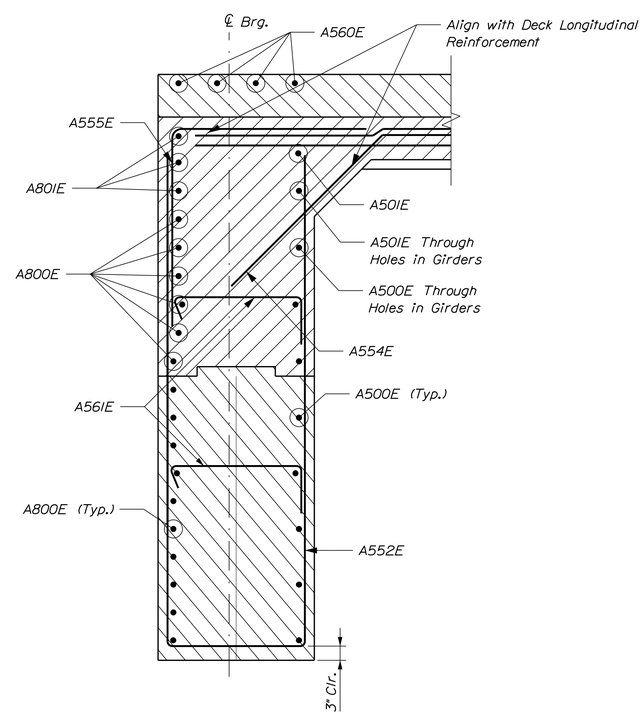

SECTION B-B

Deck Transverse Reinforcement and Curb Reinforcement not Shown for Clarity

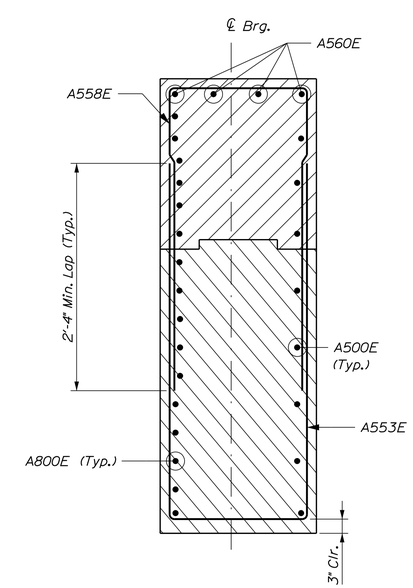

SECTION C-C

LEGEND:

C.J. = Construction Joint
N.F. = Near Face
F.F. = Far Face
E.F. = Each Face

T·Y·LIN INTERNATIONAL

STATE OF MAINE
DEPARTMENT OF TRANSPORTATION

STP-2049(600)

WIN 20496.00

BRIDGE NO. 3562

BRIDGE PLANS

STATE OF MAINE DANIEL S. MYERS No. 12572 LICENSED PROFESSIONAL ENGINEER

PROJ. MANAGER	Michael Wight		
DESIGN-DETAILED	D. Myers	P. McClure	9/15
CHECKED-REVIEWED	T. Poulin	T. Poulin	9/15
DESIGN2-DETAILED2			
DESIGN3-DETAILED3			
REVISIONS 1			
REVISIONS 2			
REVISIONS 3			
REVISIONS 4			
FIELD CHANGES			

12572 SIGNATURE
P.E. NUMBER
March 28, 2016 DATE

GOODWIN BRIDGE
OVER WEST BRANCH UNION RIVER
MARIAVILLE HANCOCK COUNTY

ABUTMENT REINFORCING

SHEET NUMBER
18
OF 32

Filename: ...\018_Abut_Reinforcement.dgn Division: HIGHWAY Username: Date:3/28/2016

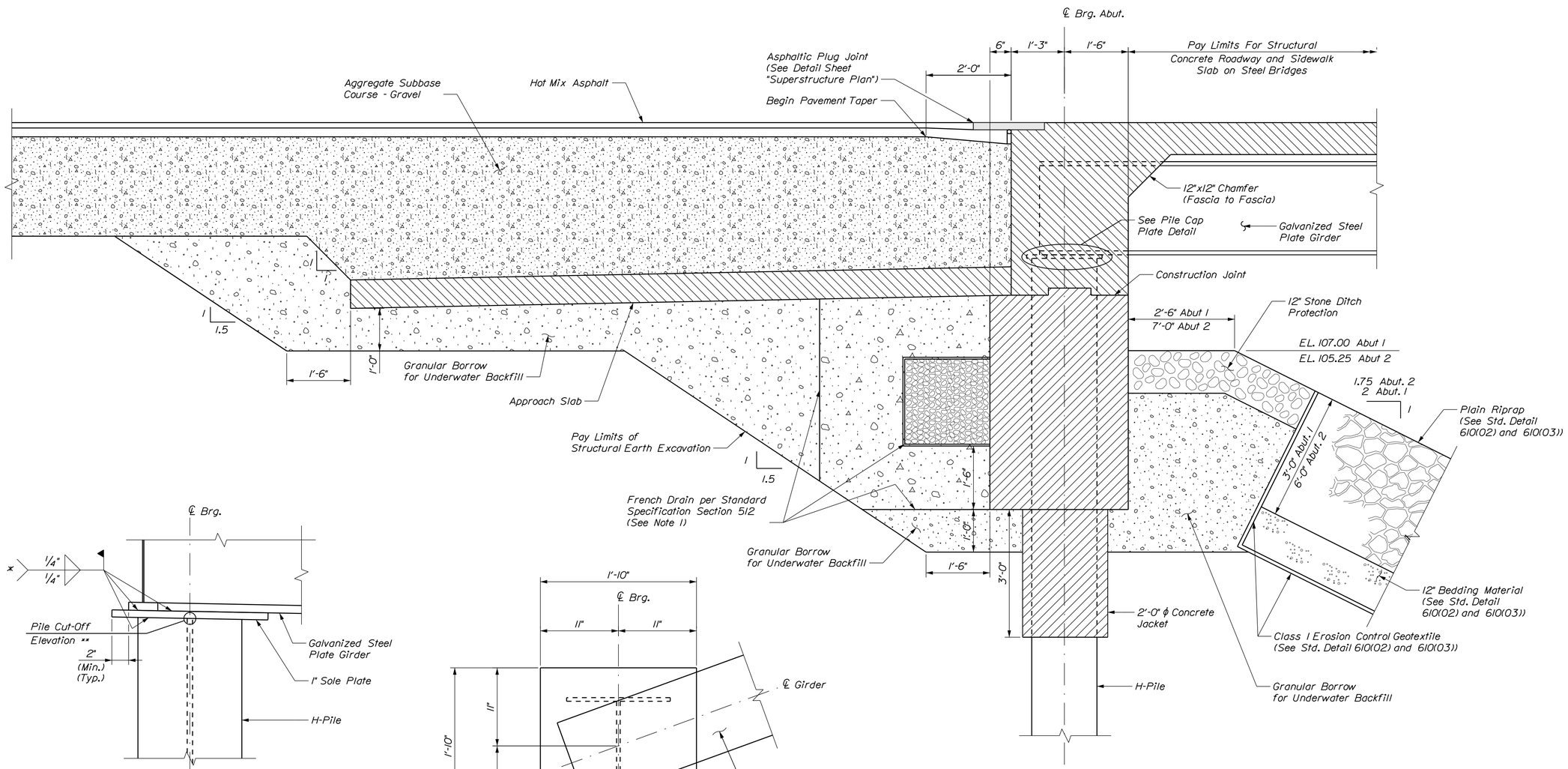

SECTION A-A TYPICAL ABUTMENT SECTION

* Zinc coating on galvanized girder shall be removed to 2" away from the weld on all sides by grinding prior to welding. The weld shall only be done on bare steel.

** Cut the Pile at a Slope to Match the Profile Grade

PILE CAP PLATE DETAIL - ELEVATION

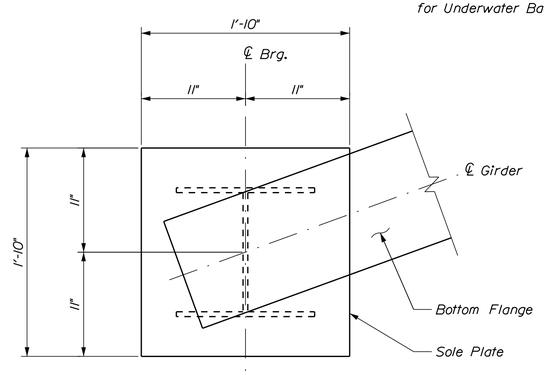

PILE CAP PLATE DETAIL - PLAN

NOTES:

1. The French Drain shall be extended to daylight beneath the Riprap near the ends of the wingwalls.

STATE OF MAINE
DEPARTMENT OF TRANSPORTATION

STP-2049(600)

WIN 20496.00

BRIDGE NO. 3562

BRIDGE PLANS

STATE OF MAINE
DANIEL S. MYERS
No. 12572
PROFESSIONAL ENGINEER
LICENSED

12572
SIGNATURE

P.E. NUMBER

March 28, 2016
DATE

		BY	DATE
PROJ. MANAGER	Michael Wight		
DESIGN-DETAILED	D. Myers	P. McGuire	9/15
CHECKED-REVIEWED	R. Hebert	R. Hebert	9/15
DESIGN2-DETAILED2			
DESIGN3-DETAILED3			
REVISIONS 1			
REVISIONS 2			
REVISIONS 3			
REVISIONS 4			
FIELD CHANGES			

GOODWIN BRIDGE
OVER WEST BRANCH UNION RIVER
MARIAVILLE HANCOCK COUNTY

ABUTMENT SECTION

SHEET NUMBER
19
OF 32

T·Y·LIN INTERNATIONAL

Filename: ...\MSTA\019_Abut_Sections.dgn Division: HIGHWAY Username: Date:3/28/2016

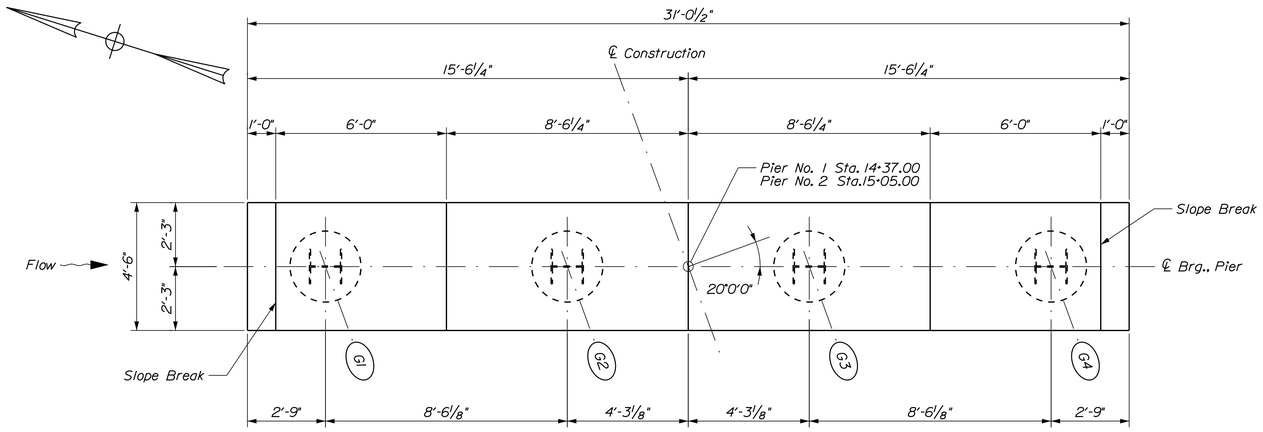

PIER PLAN

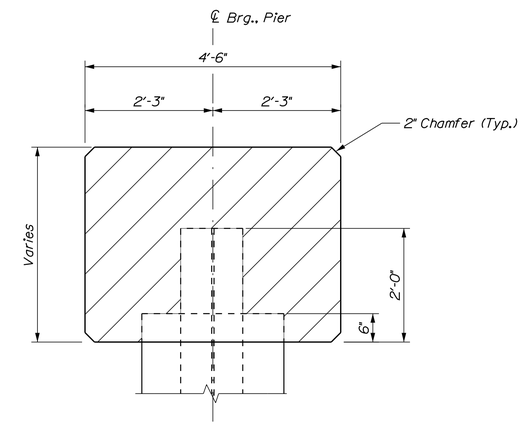

PIER SECTION A-A

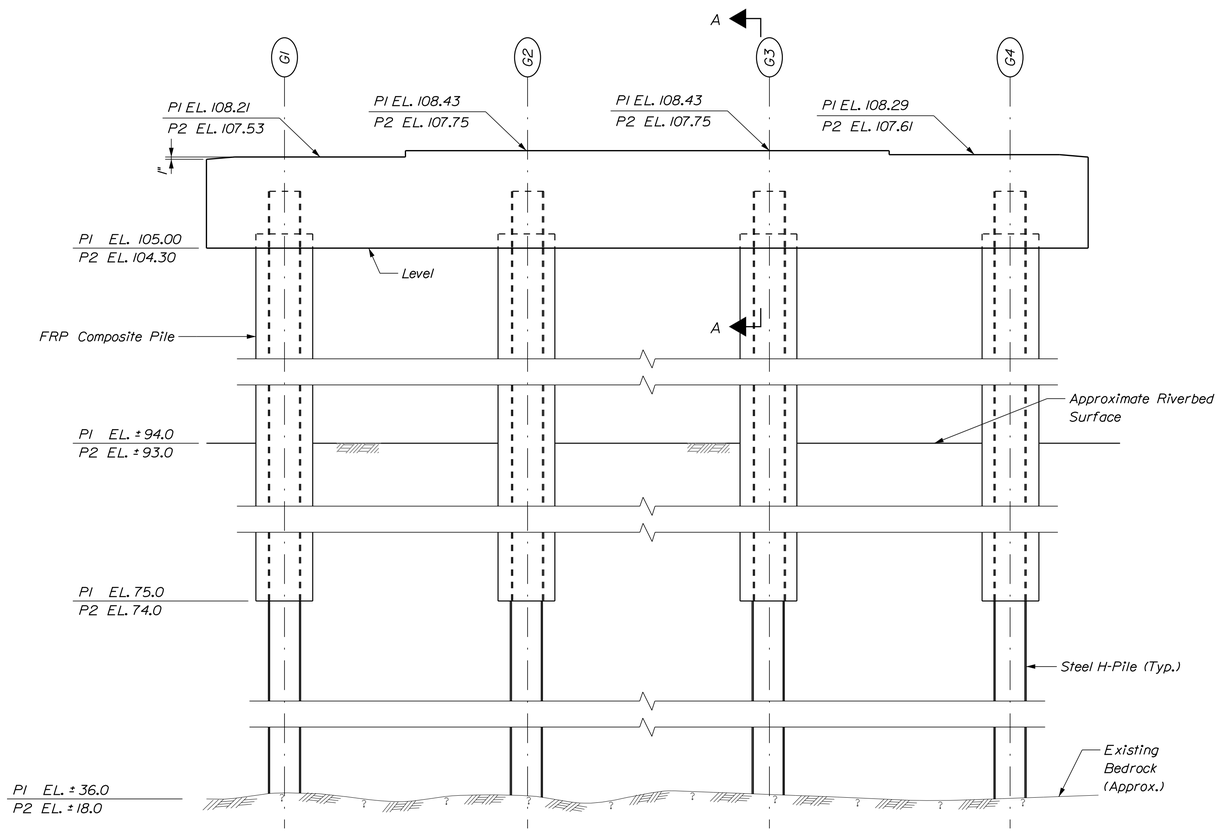

PIER - ELEVATION

PIER NOTES:

1. Reinforcing steel shall have 3 inches minimum cover unless otherwise noted.
2. See the "Abutment Plan & Elevation" sheet for pile notes.

DESIGN CRITERIA:

1. Critical AASHTO Load Combination - Extreme II at QI.1 (For Composite Pile Combined Axial Compression and Flexure)
2. Buoyancy: Water level assumed at elevation 97.0 at QI.1 and elevation 97.0 at Q50.
3. Stream flow: Maximum Velocity of 0.9 fps at QI.1 and 3.6 fps at Q50 skewed at 5° to longitudinal centerline of pier. Because backwater from downstream dam, elevation of QI.1 can vary from 97.0 to 104.2, and elevation of Q50 from 97.0 to 104.4.
4. Wind 40 PSF applied to substructure.
5. Ice: Thickness 1.5 feet pressure 200 PSI at elevation 97.0 or 104.2 for QI.1 (strength limit states), on a single pier. Thickness 1.0 feet pressure 200 PSI at elevation 97.0 or 104.2 for QI.1 (strength limit states) applied to both piers simultaneously. Thickness 2.5 feet pressure 200 PSI at elevation 97.0 or 104.2 for QI.1 (extreme limit states) on a single pier. Thickness 2.0 feet pressure 200 PSI at elevation 97.0 or 104.2 for QI.1 (extreme limit states) applied to both piers simultaneously. 30% of nose force applied transverse to pier (strength and extreme limit states).

T·Y·LIN INTERNATIONAL

STATE OF MAINE
DEPARTMENT OF TRANSPORTATION

STP-2049(600)

WIN 20496.00

BRIDGE NO. 3562

BRIDGE PLANS

STATE OF MAINE
DANIEL S. MYERS
No. 12572
LICENSED
PROFESSIONAL ENGINEER

PROJ. MANAGER	Michael Wight		
DESIGN-DETAILED	D. Myers	P. McGuire	9/15
CHECKED-REVIEWED	J. Olund	J. Olund	9/15
DESIGN2-DETAILED2			
DESIGN3-DETAILED3			
REVISIONS 1			
REVISIONS 2			
REVISIONS 3			
REVISIONS 4			
FIELD CHANGES			

SIGNATURE
12572
P.E. NUMBER
March 28, 2016
DATE

GOODWIN BRIDGE
OVER WEST BRANCH UNION RIVER
MARIAVILLE HANCOCK COUNTY

PIER PLAN, ELEVATION, & SECTION

SHEET NUMBER
20
OF 32

Filename: ...\020_Pier_Plan_Elevation_Sections.dgn Division: HIGHWAY Username: Date:3/28/2016

NOTE:

1. Space reinforcement to avoid conflicts with bearing anchor rods.

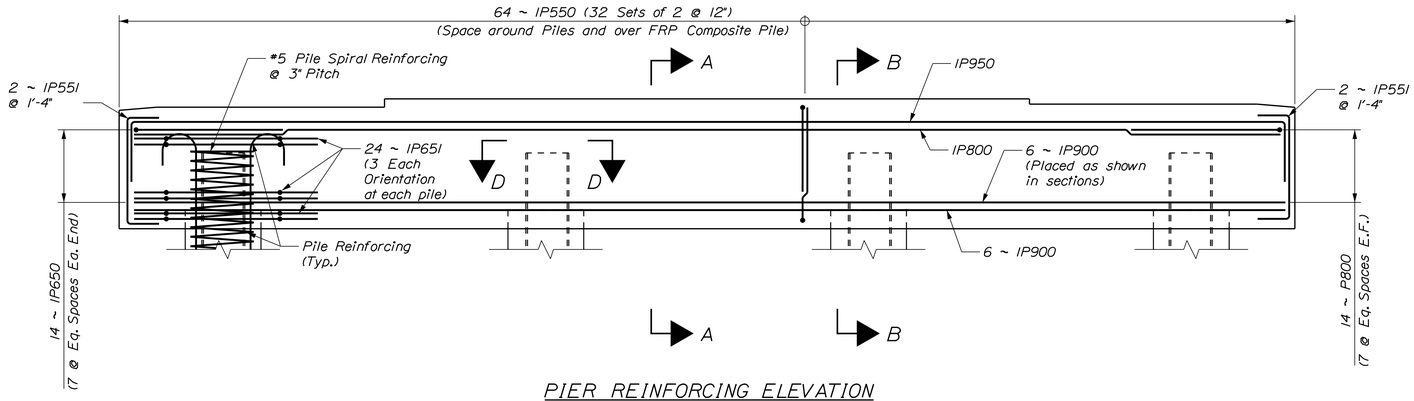

PIER REINFORCING ELEVATION

(Pier 1 shown, Pier 2 similar)
(Pier 2 Reinforcing Bars Labeled 2PXXX)

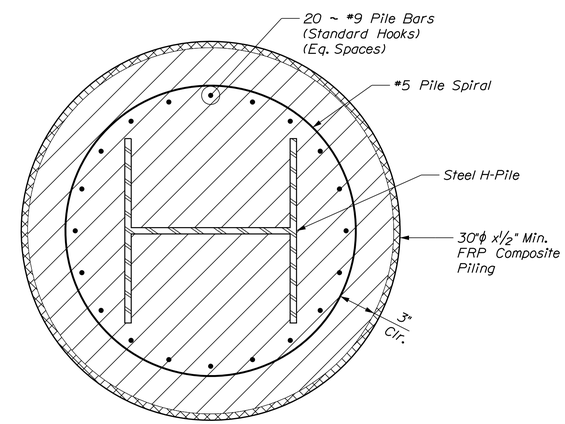

PILE SECTION C-C

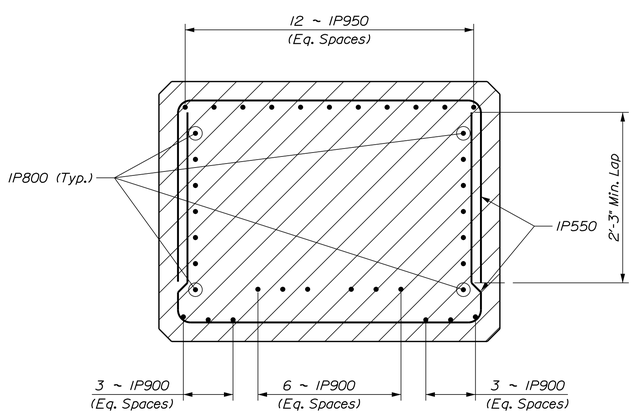

PIER SECTION A-A

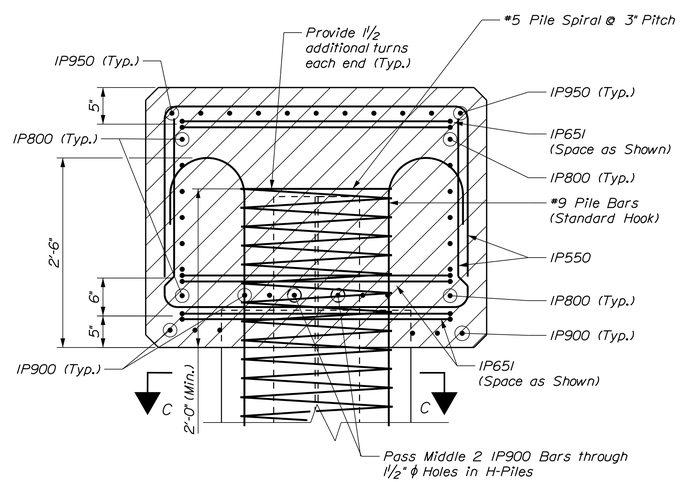

PIER SECTION B-B

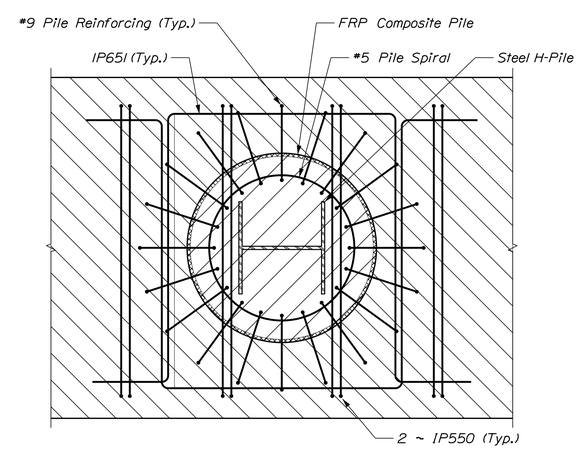

PILE SECTION D-D

(Pier cap longitudinal reinforcing not shown for clarity)

T·Y·LIN INTERNATIONAL

STATE OF MAINE
DEPARTMENT OF TRANSPORTATION

STP-2049(600)

WIN 20496.00

BRIDGE NO. 3562

BRIDGE PLANS

STATE OF MAINE
DANIEL S. MYERS
No. 12572
LICENSED
PROFESSIONAL ENGINEER

PROJ. MANAGER	Michael Wight	BY	DATE
DESIGN-DETAILED	D. Myers	P. McGuire	9/15
CHECKED-REVIEWED	J. Olund	J. Olund	2/16
DESIGN2-DETAILED2			
DESIGN3-DETAILED3			
REVISIONS 1			
REVISIONS 2			
REVISIONS 3			
REVISIONS 4			
FIELD CHANGES			

SIGNATURE
12572
P.E. NUMBER
March 28, 2016
DATE

GOODWIN BRIDGE
OVER WEST BRANCH UNION RIVER
MARIAVILLE HANCOCK COUNTY

PIER REINFORCING

SHEET NUMBER
21
OF 32

Filename: ...\MSTA\021_Pier_Reinforcing.dgn Division: HIGHWAY Username: Date:3/28/2016

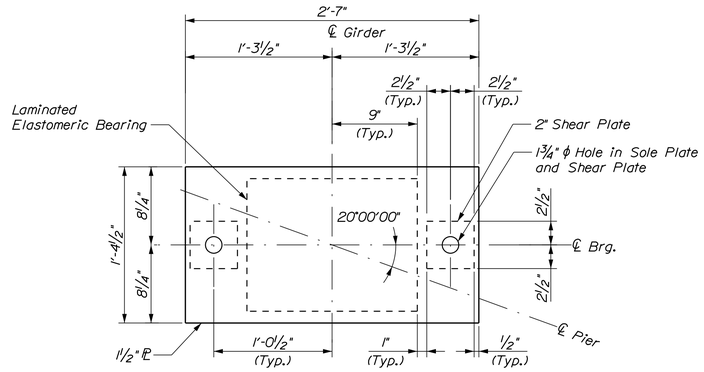

SOLE PLATE PLAN

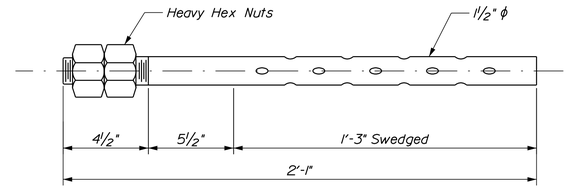

ANCHOR ROD

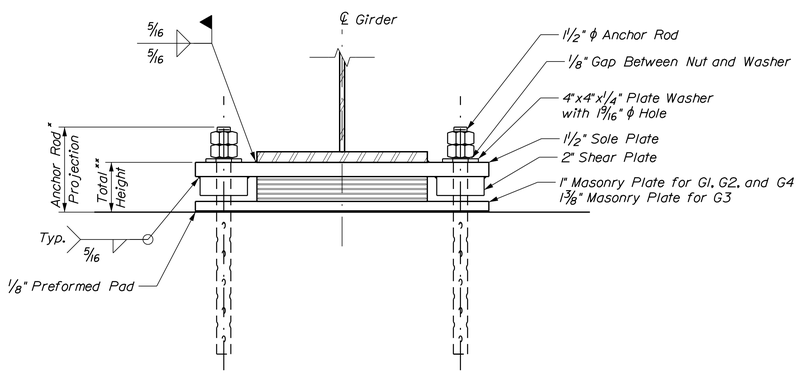

BEARING ELEVATION

* Anchor Rod projection shall be 9⅜" for G3; 9" for other girders.
** Total bearing height is 5⅝" for G3; 5¼" for other girders.

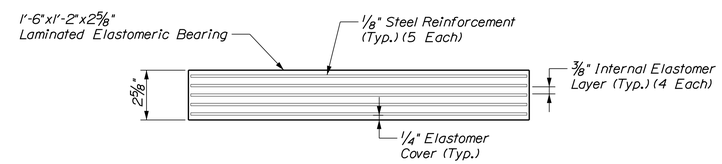

LAMINATED ELASTOMERIC BEARING SECTION

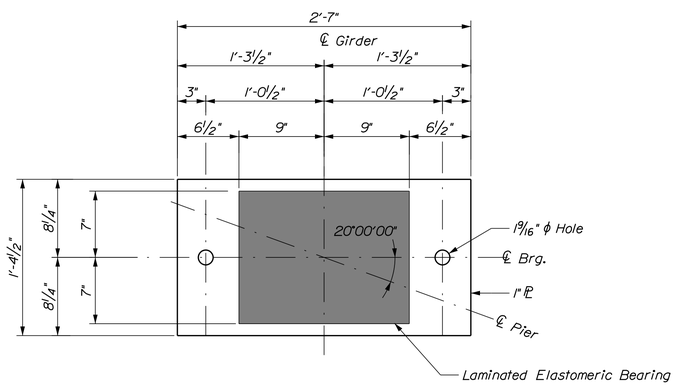

MASONRY PLATE PLAN

ELASTOMERIC BEARINGS NOTES:

1. The shear modulus shall be between 80 and 175 psi.
2. Vulcanizing of the elastomer to the steel plates shall be done during the primary mold process.
3. Upset the threads on the anchor rods after installation.
4. Masonry plates, sole plates, and shear plates shall meet the requirements of ASTM A 709/ A 709 M, Grade 50 or 50W. Anchor rods shall meet the requirements or ASTM F 1554, Grade 105 and shall be swedged on the embedded portion of the rod.
5. Bearings shall be covered during transit.
6. Masonry plates and sole plates shall be galvanized in accordance with Section 506. Anchor rods, washers, nuts and shear pins shall be galvanized to ASTM A 153 or ASTM B 695, Class 50, Type 1.
7. All bearings shall be marked prior to shipping. The marks shall include the bearing location on the bridge, and a direction arrow that points up-station. All marks shall be permanent and shall be visible after the bearing is installed.
8. All necessary precautions shall be taken to protect bearing components from field weld flash and spatter. Heat from welding operations shall be controlled such that steel adjacent to the elastomer does not exceed 200°F. The temperature shall be verified by the use of temperature indicating crayons or other suitable means.
9. The bearings are designed so that the superstructure may be erected when the ambient air temperature is within the range of 65°F and 90°F. If the ambient air tempereature is outside this range, the bearings shall be reset as directed by the Resident.
10. Use zinc rich touch up paint approved by the Resident for areas where galvanizing has been removed for welding. Zinc rich paint shall not be paid for directly. Payment shall be considered incidental to related pay items.

T·Y·LIN INTERNATIONAL

STATE OF MAINE
DEPARTMENT OF TRANSPORTATION

STP-2049(600)

WIN 20496.00

BRIDGE NO. 3562

BRIDGE PLANS

STATE OF MAINE
DANIEL S. MYERS
No. 12572
LICENSED
PROFESSIONAL ENGINEER

PROJ. MANAGER	Michael Wight	BY	DATE
DESIGN-DETAILED	D. Myers	P. McGlure	9/15
CHECKED-REVIEWED	T. Poulin	J. Olund	1/16
DESIGN2-DETAILED2			
DESIGN3-DETAILED3			
REVISIONS 1			
REVISIONS 2			
REVISIONS 3			
REVISIONS 4			
FIELD CHANGES			

12572
P.E. NUMBER

SIGNATURE

March 28, 2016
DATE

GOODWIN BRIDGE
OVER WEST BRANCH UNION RIVER
MARIAVILLE HANCOCK COUNTY

BEARING DETAILS

SHEET NUMBER
22
OF 32

Filename: ...\MSTA\022_Bearing_Details.dgn Division: HIGHWAY Username: Date:3/28/2016

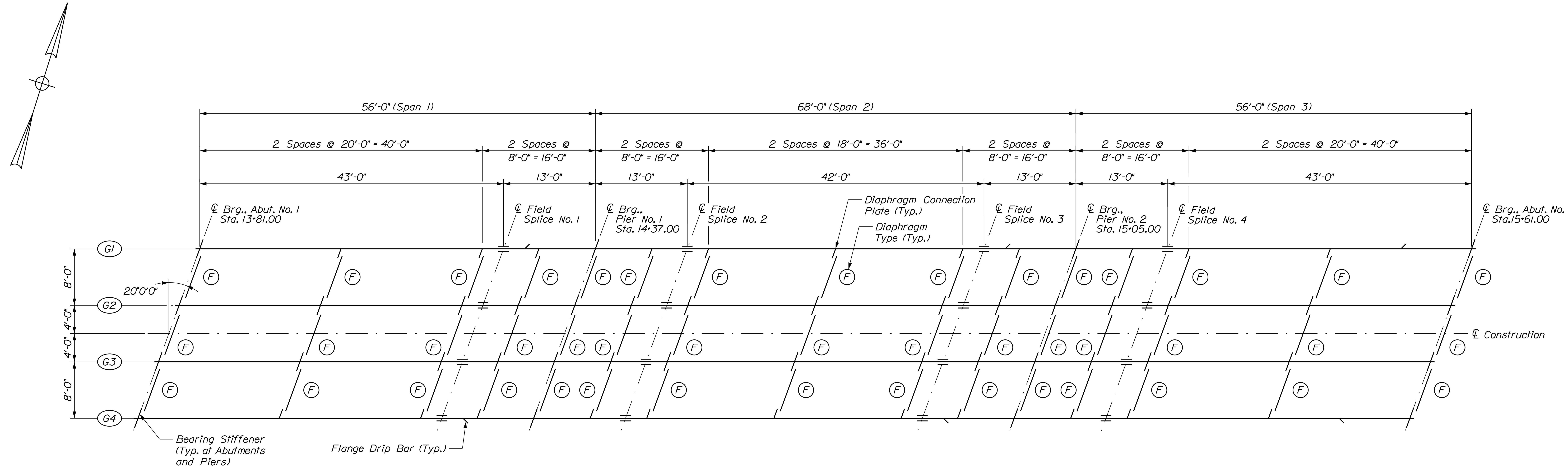

FRAMING PLAN

LEGEND:

(F) = Diaphragm Type F Per Std. Detail 504(02) With a "B" Dimension of 3½" and an "A" Dimension of 2½"

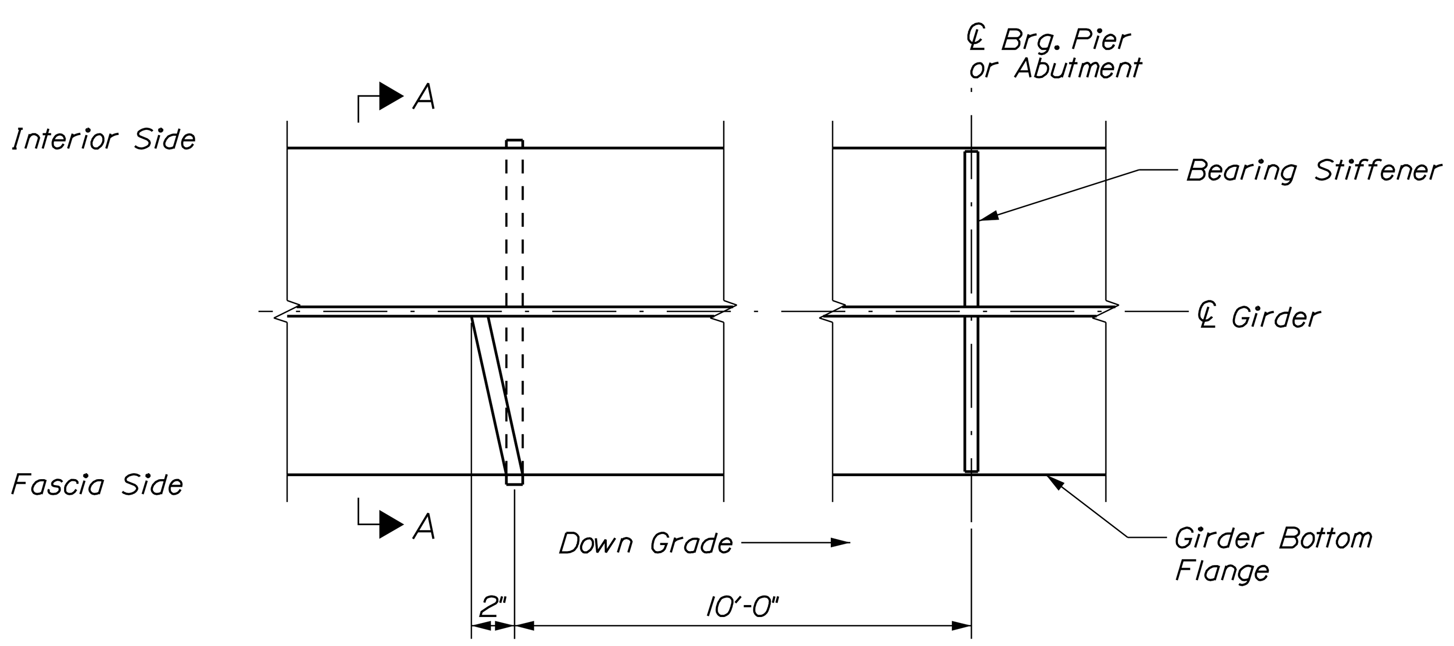

FLANGE DRIP BAR DETAIL

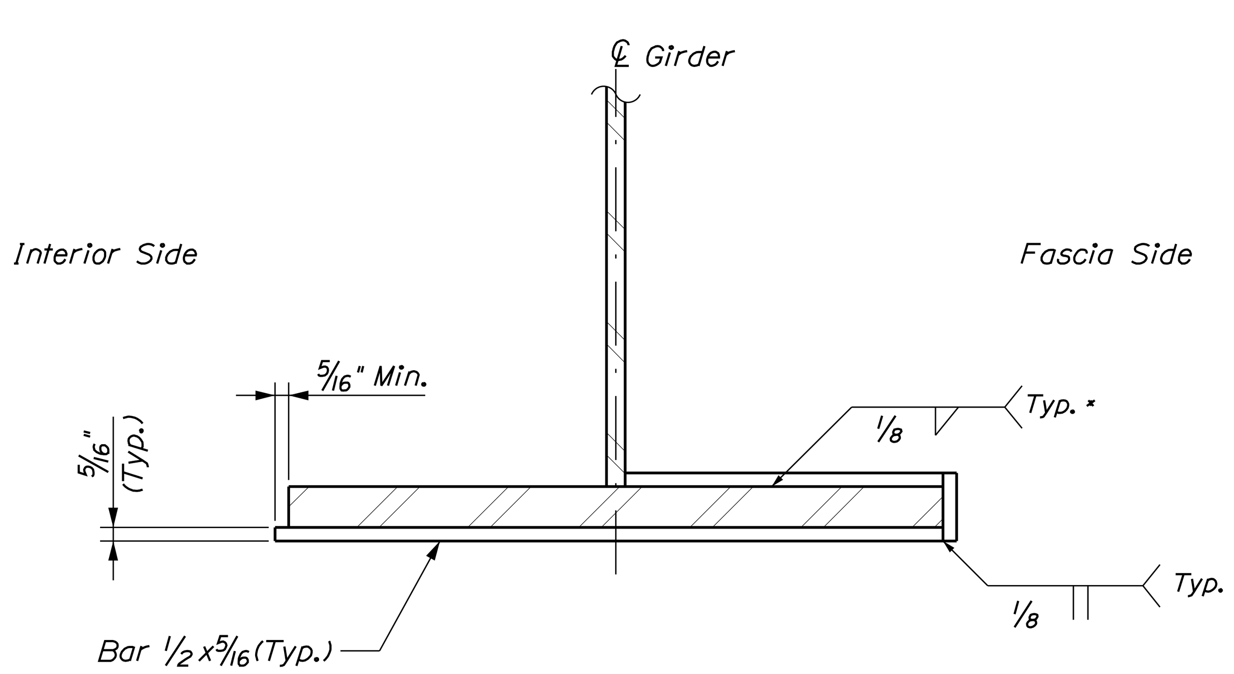

SECTION A-A

* Terminate weld ½" from web

STRUCTURAL STEEL NOTES:

1. Camber ordinates, as shown, are computed to compensate for all dead load deflections and for the curvature of the finished grade profile.
2. Bearing stiffeners shall be plumb after erection and dead loading of the structure.
3. Diaphragm connection plates may be either plumb or normal to the top flange.
4. Bolted field splice connections shall be made using ⅞" diameter, ASTM A325 Type I (Galvanized) H.S. bolts. Hole size shall be 15/16" diameter unless otherwise shown. Bolt threads shall be excluded from the shear plane of field splice connections.
5. Filler plates may be steel conforming to the requirements of ASTM A709, Grade 36. Filler plates shall be hot-dip galvanized and faying surfaces shall be roughened in accordance with the special provision.
6. Bearing stiffeners shall be full web depth and shall be welded to flanges and web using a 5/16" weld.
7. Flanges of abutment diaphragms shall be oriented so their flanges face toward the back of abutments.
8. No transverse butt-weld splices will be allowed in the flange plates or web plates.
9. All web, flange and field splice plates shall conform to zone 2 Charpy V-notch impact test requirements of AASHTO M270.

Date: 3/28/2016 Username: Division: HIGHWAY Filename: ...\MSTA\023_Framing_Plan.dgn

T.Y. LIN INTERNATIONAL

STATE OF MAINE
DEPARTMENT OF TRANSPORTATION
STP-2049(600)
WIN 20496.00
BRIDGE PLANS
BRIDGE NO. 3562

SIGNATURE
12572
P.E. NUMBER
March 28, 2016
DATE

		BY	DATE
PROJ. MANAGER	Michael Wight		
DESIGN-DETAILED	D. Myers	P. McClure	9/15
CHECKED-REVIEWED	R. Hebert	R. Hebert	9/15
DESIGN2-DETAILED2			
DESIGN3-DETAILED3			
REVISIONS 1			
REVISIONS 2			
REVISIONS 3			
REVISIONS 4			
FIELD CHANGES			

GOODWIN BRIDGE
OVER WEST BRANCH UNION RIVER
MARIAVILLE HANCOCK COUNTY

FRAMING PLAN

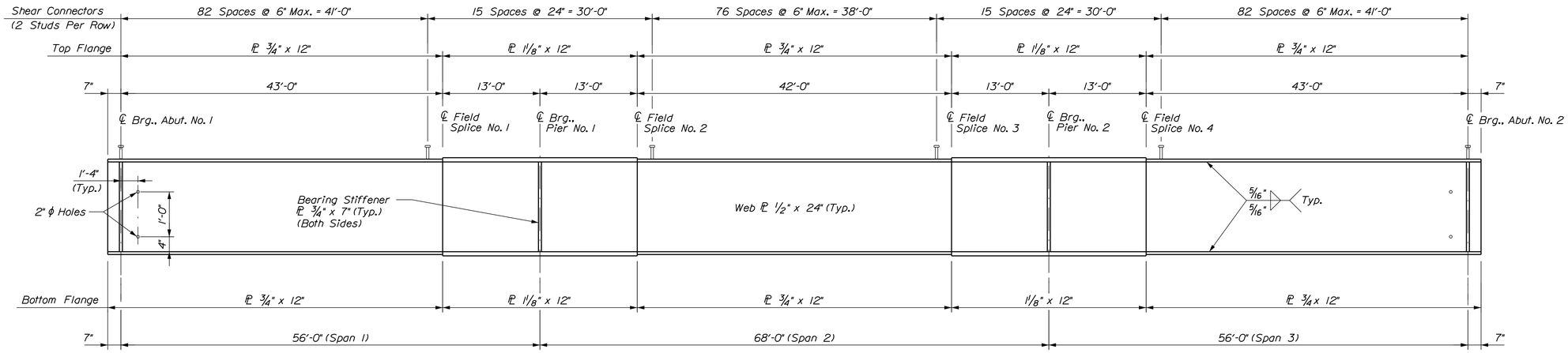

NOTES:

1. Girder dimensions are measured horizontally along centerline of girder without accounting for vertical profile.
2. See "Framing Plan" for locations of connection plates.
3. Total of 542 shear studs per girder.
4. Studs shall project a minimum of 2" above the bottom of the slab.

GIRDER ELEVATION

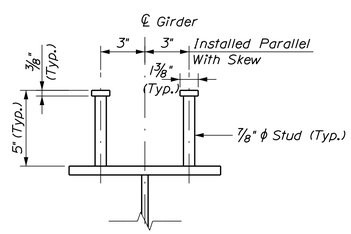

SHEAR CONNECTOR DETAIL

Filename: ...\024_Girder_Elevation_Details.dgn Division: HIGHWAY Username: Date:3/28/2016

T·Y·LIN INTERNATIONAL

STATE OF MAINE
DEPARTMENT OF TRANSPORTATION

STP-2049(600)

WIN 20496.00

BRIDGE NO. 3562

BRIDGE PLANS

STATE OF MAINE
DANIEL S. MYERS
No. 12572
LICENSED
PROFESSIONAL ENGINEER

PROJ. MANAGER	Michael Wight	BY	DATE
DESIGN-DETAILED	D. Myers	P. McClure	9/15
CHECKED-REVIEWED	R. Hebert	R. Hebert	9/15
DESIGN2-DETAILED2			
DESIGN3-DETAILED3			
REVISIONS 1			
REVISIONS 2			
REVISIONS 3			
REVISIONS 4			
FIELD CHANGES			

SIGNATURE

12572
P.E. NUMBER

March 28, 2016
DATE

GOODWIN BRIDGE
OVER WEST BRANCH UNION RIVER
MARIAVILLE HANCOCK COUNTY

GIRDER ELEVATION & DETAILS

SHEET NUMBER

24

OF 32

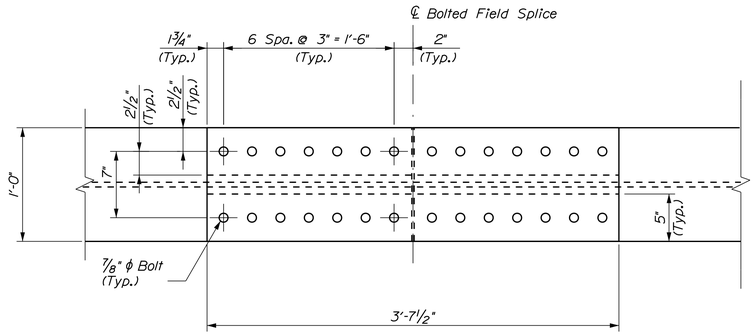

BOLTED FIELD SPLICE TOP VIEW

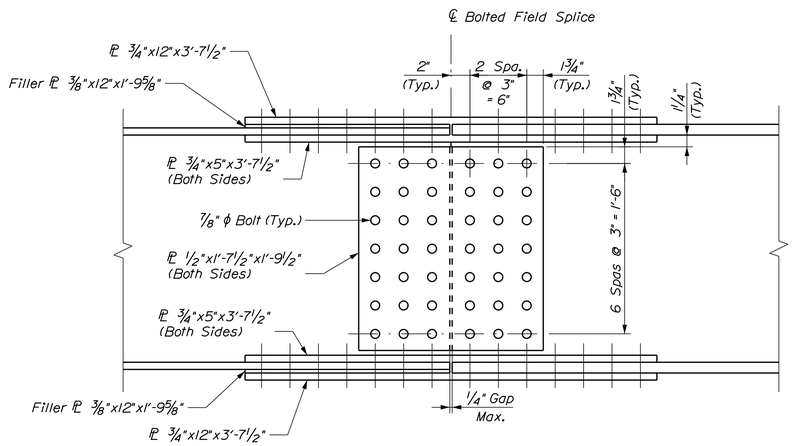

BOLTED FIELD SPLICE ELEVATION

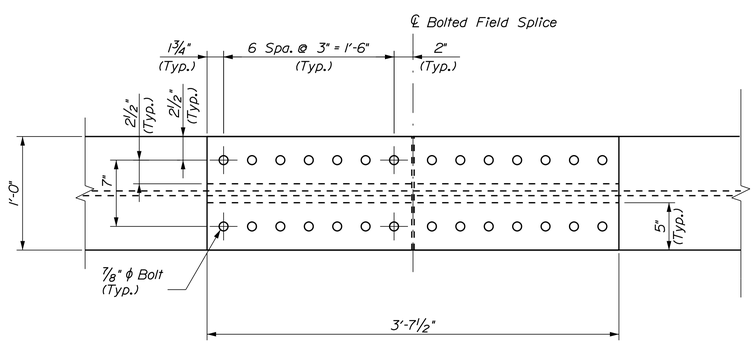

BOLTED FIELD SPLICE BOTTOM VIEW

Filename: ...\025_Field_Splice_Details.dgn Division: HIGHWAY Username: Date:3/28/2016

STATE OF MAINE
DEPARTMENT OF TRANSPORTATION

STP-2049(600)

WIN 20496.00

BRIDGE NO. 3562

BRIDGE PLANS

STATE OF MAINE
DANIEL S. MYERS
No. 12572
LICENSED
PROFESSIONAL ENGINEER

PROJ. MANAGER	Michael Wight	BY	DATE
DESIGN-DETAILED	D. Myers	P. McGuire	9/15
CHECKED-REVIEWED	R. Hebert	R. Hebert	9/15
DESIGN2-DETAILED2			
DESIGN3-DETAILED3			
REVISIONS 1			
REVISIONS 2			
REVISIONS 3			
REVISIONS 4			
FIELD CHANGES			

SIGNATURE

12572
P.E. NUMBER

March 28, 2016
DATE

GOODWIN BRIDGE
OVER WEST BRANCH UNION RIVER
MARIAVILLE HANCOCK COUNTY

FIELD SPLICE DETAILS

TY·LIN INTERNATIONAL

SHEET NUMBER
25
OF 32

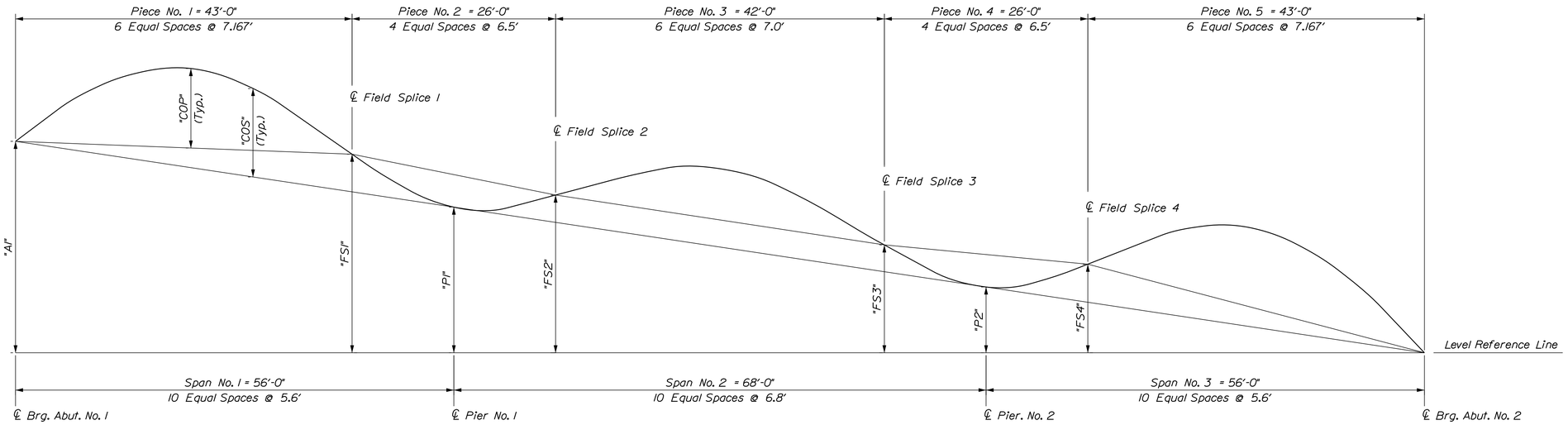

CAMBER DIAGRAM

TABLE OF CAMBER ORDINATES BY PIECE ("COP") (in)

Girder	Abut 1	Piece 1					Field Splice 1	Piece 2			Field Splice 2	Piece 3					Field Splice 3	Piece 4			Field Splice 4	Piece 5					Abut 2
		1	2	3	4	5		1	2	3		1	2	3	4	5		1	2	3		1	2	3	4	5	
G1-G4	0	3/8	5/8	3/4	5/8	3/8	0	-1/4	-5/16	-1/4	0	1/4	7/16	1/2	7/16	1/4	0	-1/4	-5/16	-1/4	0	3/8	5/8	3/4	5/8	3/8	0

TABLE OF CAMBER ORDINATES BY SPAN ("COS") (in)

Girder	Abut 1	Span 1									Pier 1	Span 2									Pier 2	Span 3									Abut 2
		1	2	3	4	5	6	7	8	9		1	2	3	4	5	6	7	8	9		1	2	3	4	5	6	7	8	9	
G1-G4	0	3/8	11/16	7/8	1	15/16	3/4	9/16	5/16	1/8	0	1/16	1/4	1/2	11/16	3/4	11/16	1/2	1/4	1/16	0	1/8	5/16	9/16	3/4	15/16	1	7/8	11/16	3/8	0

TABLE OF CAMBER DIMENSIONS (ft)

"A1"	"FS1"	"P1"	"FS2"	"FS3"	"P2"	"FS4"
1.80	1.40	1.24	1.13	0.71	0.50	0.46

TABLE OF DEFLECTIONS BY SPAN (in)

Description	Abut 1	Span 1									Pier 1	Span 2									Pier 2	Span 3									Abut 2
		1	2	3	4	5	6	7	8	9		1	2	3	4	5	6	7	8	9		1	2	3	4	5	6	7	8	9	
Steel Dead Load	0.00	0.04	0.08	0.10	0.11	0.11	0.09	0.07	0.04	0.01	0.00	0.01	0.03	0.06	0.08	0.09	0.08	0.06	0.03	0.01	0.00	0.01	0.04	0.07	0.09	0.11	0.11	0.10	0.08	0.04	0.00
Fluid Dead Load	0.00	0.32	0.57	0.74	0.81	0.77	0.65	0.46	0.27	0.09	0.00	0.06	0.23	0.43	0.59	0.65	0.59	0.43	0.23	0.06	0.00	0.09	0.27	0.46	0.65	0.77	0.81	0.74	0.57	0.32	0.00
Superimposed Dead Load	0.00	0.02	0.03	0.04	0.05	0.05	0.04	0.03	0.02	0.01	0.00	0.00	0.01	0.03	0.04	0.04	0.04	0.03	0.01	0.00	0.00	0.01	0.02	0.03	0.04	0.05	0.05	0.04	0.03	0.02	0.00

Deflections given at tenth points

NOTES:

1. Positive camber values are upward.
2. Positive deflections are downward.

T·Y·LIN INTERNATIONAL

STATE OF MAINE
DEPARTMENT OF TRANSPORTATION

STP-2049(600)

WIN 20496.00

BRIDGE NO. 3562

BRIDGE PLANS

STATE OF MAINE
DANIEL S. MYERS
No. 12572
LICENSED
PROFESSIONAL ENGINEER

PROJ. MANAGER	Michael Wight	BY	DATE
DESIGN-DETAILED	D. Myers	P. McGuire	9/15
CHECKED-REVIEWED	R. Hebert	R. Hebert	9/15
DESIGN2-DETAILED2			
DESIGN3-DETAILED3			
REVISIONS 1			
REVISIONS 2			
REVISIONS 3			
REVISIONS 4			
FIELD CHANGES			

12572 SIGNATURE
P.E. NUMBER
March 28, 2016 DATE

GOODWIN BRIDGE
OVER WEST BRANCH UNION RIVER
MARIAVILLE HANCOCK COUNTY

DEAD LOAD DEFLECTIONS & CAMBER

SHEET NUMBER
26
OF 32

Date:3/28/2016 Division: HIGHWAY Username: Filename: ...\026_Camber_Deflections.dgn

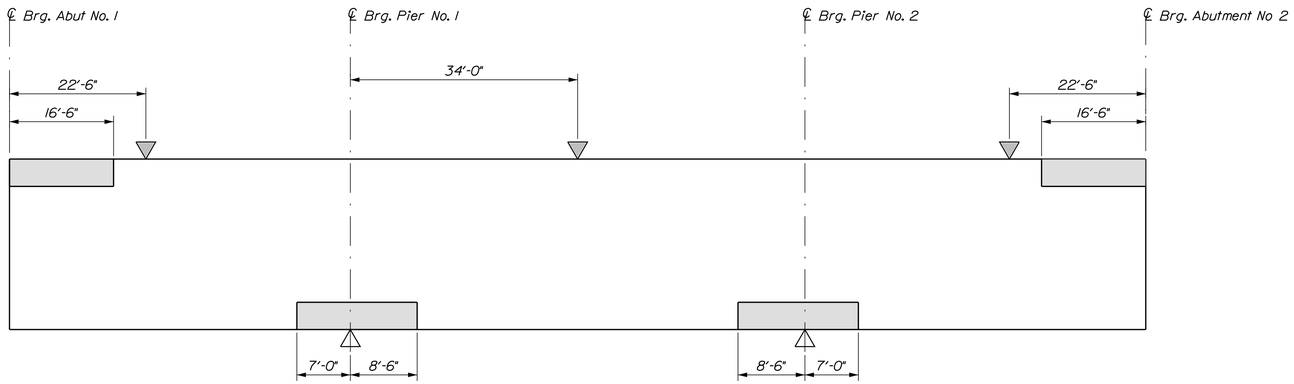

STRESS DIAGRAM - EXTERIOR GIRDERS

Shaded areas are always in compression.

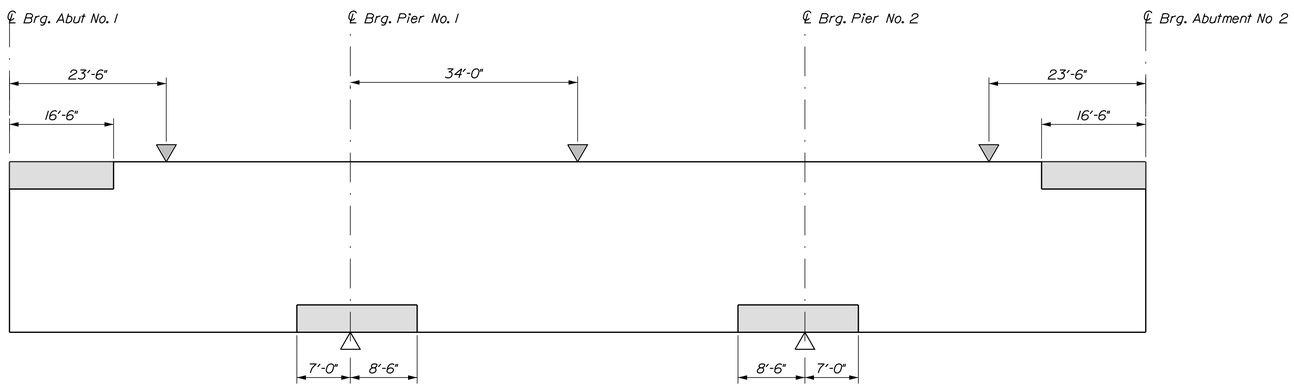

STRESS DIAGRAM - INTERIOR GIRDERS

Shaded areas are always in compression.

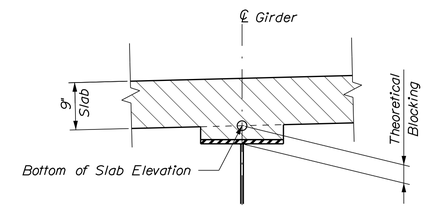

BLOCKING DETAIL

Theoretical blocking is 3" at ℄ Brg., Abutments and Piers

(Do not use theoretical blocking to set forms)

LEGEND:

Maximum Positive Moment

Maximum Negative Moment

BOTTOM OF SLAB ELEVATIONS @ 10th POINTS ALONG ℄ GIRDER

Girder	Abut 1	Span 1									Pier 1	Span 2									Pier 2	Span 3									Abut 2
		1	2	3	4	5	6	7	8	9		1	2	3	4	5	6	7	8	9		1	2	3	4	5	6	7	8	9	
1	111.55	111.52	111.48	111.44	111.39	111.33	111.27	111.19	111.12	111.05	110.99	110.92	110.87	110.82	110.77	110.70	110.63	110.55	110.46	110.38	110.31	110.26	110.22	110.18	110.14	110.09	110.04	109.98	109.91	109.83	109.75
2	111.78	111.75	111.71	111.67	111.62	111.56	111.50	111.42	111.35	111.28	111.22	111.15	111.10	111.05	111.00	110.93	110.86	110.78	110.69	110.61	110.54	110.49	110.45	110.41	110.37	110.32	110.27	110.21	110.14	110.06	109.98
3	111.80	111.78	111.74	111.70	111.65	111.59	111.53	111.45	111.38	111.31	111.24	111.18	111.13	111.08	111.02	110.96	110.89	110.81	110.72	110.64	110.56	110.52	110.48	110.44	110.40	110.35	110.30	110.24	110.17	110.09	110.00
4	111.63	111.61	111.57	111.53	111.48	111.42	111.35	111.28	111.21	111.14	111.07	111.01	110.96	110.91	110.85	110.79	110.72	110.64	110.55	110.47	110.39	110.35	110.31	110.27	110.23	110.18	110.13	110.07	110.00	109.92	109.83

T·Y·LIN INTERNATIONAL

STATE OF MAINE
DEPARTMENT OF TRANSPORTATION

STP-2049(600)

WIN 20496.00

BRIDGE NO. 3562

BRIDGE PLANS

STATE OF MAINE
DANIEL S. MYERS
No. 12572
LICENSED
PROFESSIONAL ENGINEER

SIGNATURE
12572
P.E. NUMBER
March 28, 2016
DATE

PROJ. MANAGER	Michael Wight	BY	DATE
DESIGN-DETAILED	D. Myers	P. McClure	9/15
CHECKED-REVIEWED	R. Hebert	R. Hebert	
DESIGN2-DETAILED2			
DESIGN3-DETAILED3			
REVISIONS 1			
REVISIONS 2			
REVISIONS 3			
REVISIONS 4			
FIELD CHANGES			

GOODWIN BRIDGE
OVER WEST BRANCH UNION RIVER
MARIAVILLE HANCOCK COUNTY

GIRDER STRESS DIAGRAM
& BOS ELEVATIONS

SHEET NUMBER
27
OF 32

Filename: ...\027_Girder_Stress_Diagram.dgn Division: HIGHWAY Username: Date:3/28/2016

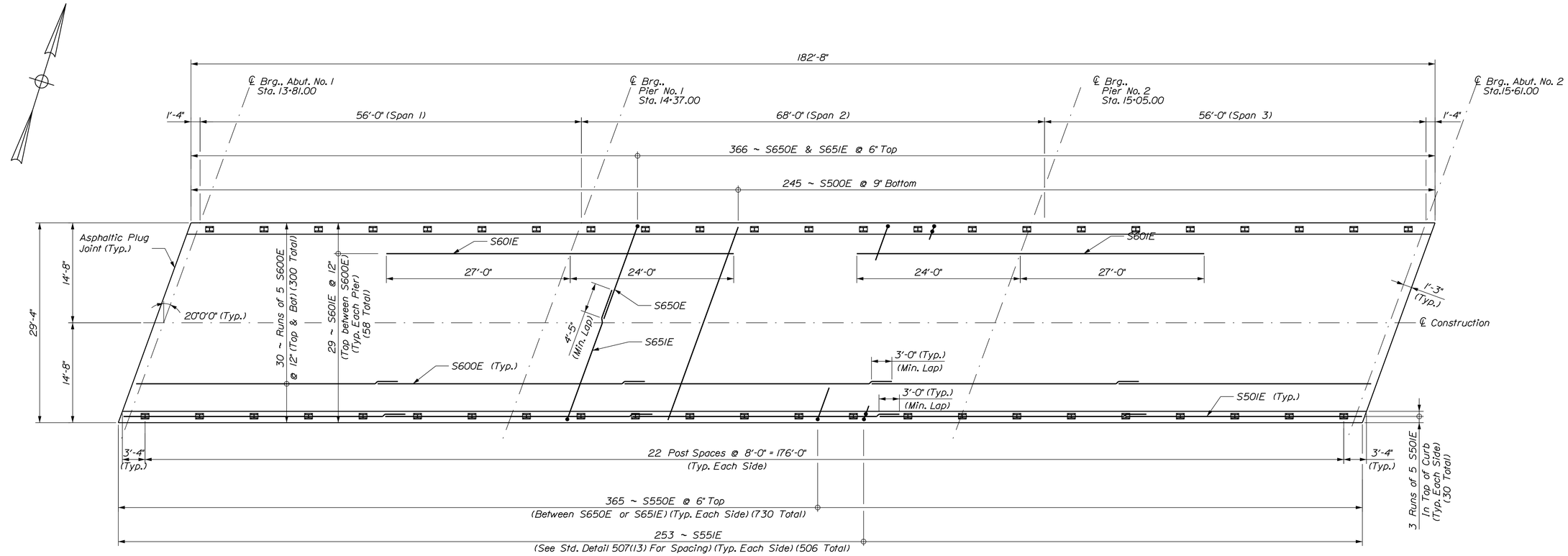

SUPERSTRUCTURE PLAN

(Bars Extending Into Integral Abutments Not Shown for Clarity)

SUPERSTRUCTURE NOTES:

1. Form a one inch V-groove on the fascias at the horizontal joint between the curb and slab.
2. Reinforcing steel shall have a minimum concrete cover of 2 inches unless otherwise noted.
3. The theoretical blocking used for design of the structure is 3" at the centerline of bearing of the abutments and piers. Refer to Standard Details 502(03) for blocking details.
4. The superstructure slab concrete shall be placed in one continuous operation and the concrete shall be kept plastic one complete span behind the span being placed.
5. The Contractor shall provide temporary bracing between the fascia girder and first interior girder at overhang bracket locations during superstructure slab placement to prevent excessive overhang deflection. Temporary bracing shall be designed and stamped by a licensed professional engineer. Temporary bracing shall not be paid for directly. Payment shall be considered incidental to related contract items.
6. At the Contractor's option, Precast Deck Panels may be used in place of the full depth cast-in-place deck slab, in accordance with Special Provision 502, Structural Concrete - Precast Deck Panels, and in accordance with the Standard Details.
7. Payment for reinforcing steel fabricated, delivered, and placed in the cast-in-place portion of the structural concrete slab will be considered incidental to the appropriate Section 502 pay items.

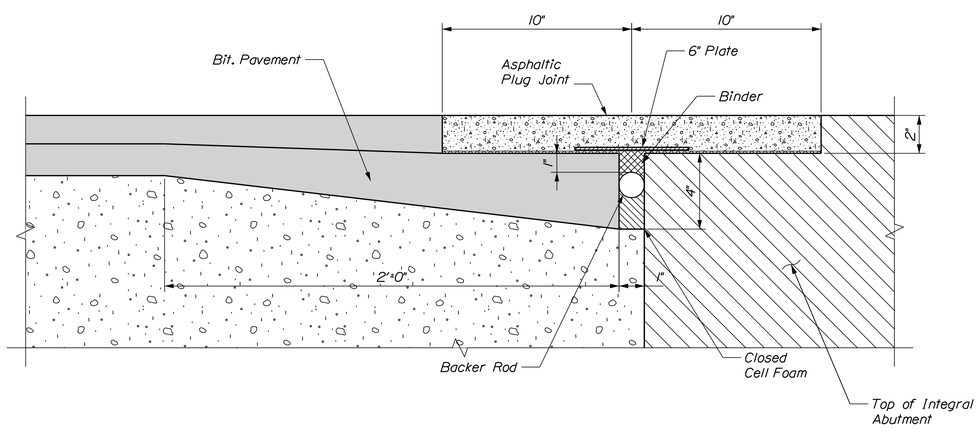

ASPHALTIC PLUG JOINT SECTION

Not to Scale

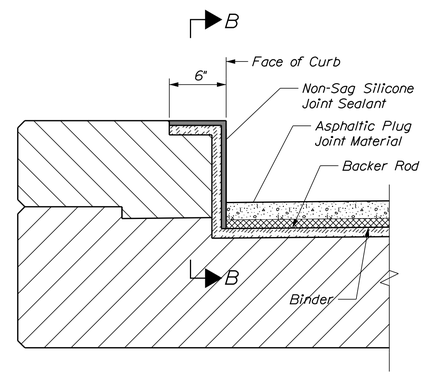

ASPHALTIC PLUG JOINT DETAIL AT CURB

Not to Scale

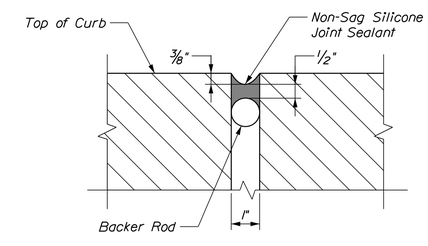

SECTION B-B

Not to Scale

T·Y·LIN INTERNATIONAL

STATE OF MAINE
DEPARTMENT OF TRANSPORTATION

STP-2049(600)

WIN 20496.00

BRIDGE NO. 3562

BRIDGE PLANS

STATE OF MAINE
DANIEL S. MYERS
No. 12572
LICENSED
PROFESSIONAL ENGINEER

PROJ. MANAGER	Michael Wight		
DESIGN-DETAILED	D. Myers	P. McClure	9/15
CHECKED-REVIEWED	T. Poulin	T. Poulin	9/15
DESIGN2-DETAILED2			
DESIGN3-DETAILED3			
REVISIONS 1			
REVISIONS 2			
REVISIONS 3			
REVISIONS 4			
FIELD CHANGES			

SIGNATURE — DATE

12572 — P.E. NUMBER

March 28, 2016 — DATE

GOODWIN BRIDGE
OVER WEST BRANCH UNION RIVER
MARIAVILLE HANCOCK COUNTY

SUPERSTRUCTURE PLAN

SHEET NUMBER

28

OF 32

Filename: ...\028_Superstructure_Plan.dgn Division: HIGHWAY Username: Date:3/28/2016

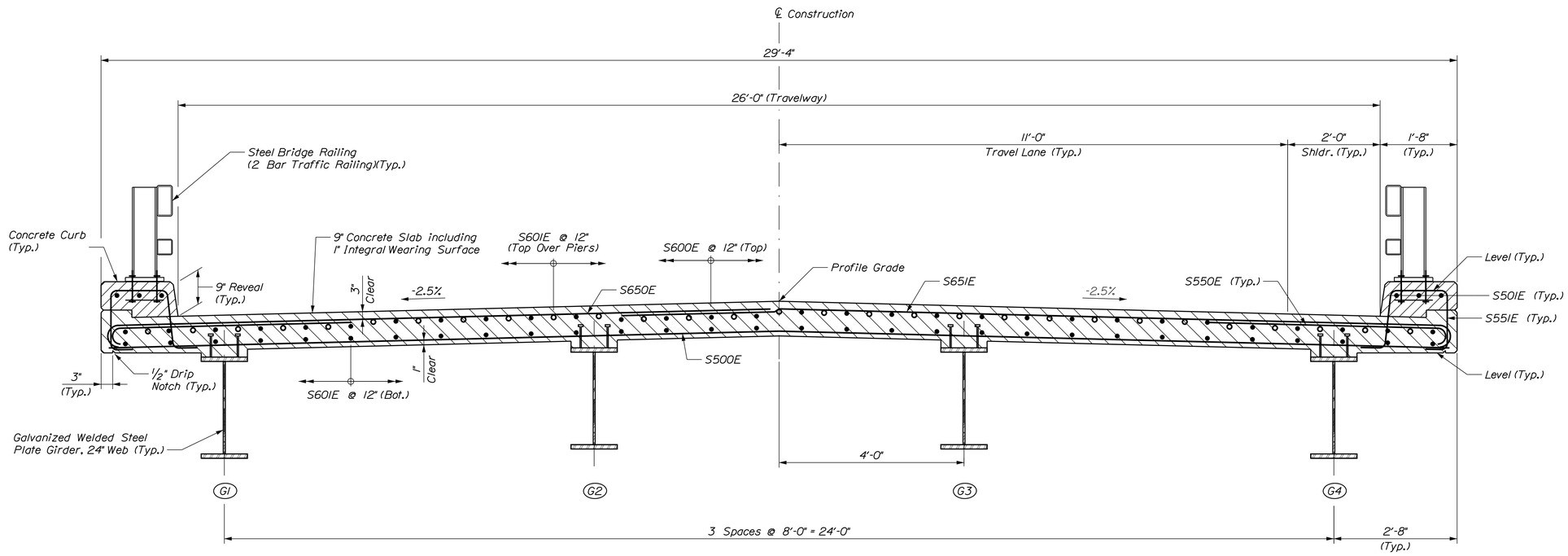

TRANSVERSE SECTION

STATE OF MAINE
DEPARTMENT OF TRANSPORTATION

STP-2049(600)

WIN 20496.00

BRIDGE NO. 3562

BRIDGE PLANS

STATE OF MAINE
DANIEL S. MYERS
No. 12572
PROFESSIONAL ENGINEER
LICENSED

PROJ. MANAGER	Michael Wight		
DESIGN-DETAILED	D. Myers	P. McClure	9/15
CHECKED-REVIEWED	T. Poulin	T. Poulin	9/15
DESIGN2-DETAILED2			
DESIGN3-DETAILED3			
REVISIONS 1			
REVISIONS 2			
REVISIONS 3			
REVISIONS 4			
FIELD CHANGES			

SIGNATURE

12572
P.E. NUMBER

March 28, 2016
DATE

GOODWIN BRIDGE
OVER WEST BRANCH UNION RIVER
MARIAVILLE HANCOCK COUNTY

SLAB TRANSVERSE SECTION

SHEET NUMBER
29
OF 32

T·Y·LIN INTERNATIONAL

Filename: ...\029_Slab_Transverse_Section.dgn Division: HIGHWAY Username: Date:3/28/2016

STRAIGHT BARS

MARK	QTY.	LENGTH	LOCATION	MARK	QTY.	LENGTH	LOCATION
			Approach Slabs				
AS501	32	26'-3"	Approach Slab, Transverse				
AS601	100	15'-2"	Approach Slab, Longitudinal				
			Abutment No. 2				
A500E	16	12'-2"	Wingwall, Longitudinal				
A501E	4	11'-4"	Wingwall, Longitudinal				
A502E	37	6'-10"	Abutment Stem, Vertical				
A600E	20	27'-8"	Abutment Stem, Longitudinal				
A800E	32	12'-4"	Wingwall, Longitudinal				
A801E	6	9'-10"	Wingwall, Longitudinal				
			Abutment No. 2				
B500E	16	12'-2"	Wingwall, Longitudinal				
B501E	4	11'-4"	Wingwall, Longitudinal				
B502E	37	6'-9"	Abutment Stem, Vertical				
B600E	20	27'-8"	Abutment Stem, Longitudinal				
B800E	32	12'-4"	Wingwall, Longitudinal				
B801E	6	9'-10"	Wingwall, Longitudinal				
			Pier No. 1				
1P800	14	30'-6"	Pier Cap, Longitudinal				
1P900	12	30'-6"	Pier Cap, Longitudinal				
			Pier No. 2				
2P800	14	30'-6"	Pier Cap, Longitudinal				
2P900	12	30'-6"	Pier Cap, Longitudinal				
			Superstructure				
S500E	245	30'-10"	Bottom, Transverse				
S501E	30	38'-11"	Curb, Longitudinal				
S600E	300	38'-11"	Main, Longitudinal				
S601E	58	51'-0"	Over Piers, Longitudinal				
MARK	QTY.	LENGTH	LOCATION	MARK	QTY.	LENGTH	LOCATION

BENT BARS

MARK	QTY.	LENGTH	TYPE	A	B	C	D	E	F	G	H	O	R	LOCATION
							Abutment No. 1							
A550E	37	11'-8"	L	8'-9"	2'-11"	-	-	-	-	-	-	-	-	Vertical Abutment Stirrup
A551E	37	10'-5"	S	0"	2'-11"	4'-7"	2'-11"	-	-	0"	-	-	-	Approach Slab Seat
A552E	8	19'-11"	S	0"	8'-9"	2'-5"	8'-9"	-	-	0"	-	-	-	Bottom Wingwall Stirrup
A553E	12	15'-1"	S	0"	6'-4"	2'-5"	6'-4"	-	-	0"	-	-	-	Bottom Wingwall Stirrup
A554E	43	7'-6"	V	-	-	-	3'-9"	3'-9"	-	-	2'-8"	-	-	Abutment Top
A555E	43	6'-0"	L	3'-0"	3'-0"	-	-	-	-	-	-	-	-	Abutment Top
A556E	27	6'-7"	L	5'-9"	10"	-	-	-	-	-	-	-	-	Dowels into Approach Slab
A557E	6	8'-3"	S	0"	2'-11"	2'-5"	2'-11"	-	-	0"	-	-	-	Top Wingwall Stirrup
A558E	12	12'-11"	S	0"	5'-3"	2'-5"	5'-3"	-	-	0"	-	-	-	Top Wingwall Stirrup
A559E	4	6'-11"	V	-	-	-	1'-10"	5'-1"	-	-	2'-6"	-	-	Top Wingwall
A560E	4	7'-1"	V	-	-	-	1'-9"	5'-4"	-	-	3'-0"	-	-	Top Wingwall
A561E	20	3'-8 1/2"	PC	5 1/2"	-	2'-5"	-	-	-	10"	-	-	-	Stirrup
A562E	4	4'-2 1/2"	PC	5 1/2"	-	2'-11"	-	-	-	10"	-	-	-	Stirrup
A563E	15	4'-1"	S	0"	10"	2'-5"	10"	-	-	0"	-	-	-	End of Wingwall
A564E	1	7'-11"	S	0"	10"	6'-3"	10"	-	-	0"	-	-	-	End of Wingwall
A565E	1	8'-6"	S	0"	10"	6'-10"	10"	-	-	0"	-	-	-	End of Wingwall
							Abutment No. 2							
B550E	37	11'-7"	L	8'-8"	2'-11"	-	-	-	-	-	-	-	-	Vertical Abutment Stirrup
B551E	37	10'-5"	S	0"	2'-11"	4'-7"	2'-11"	-	-	0"	-	-	-	Approach Slab Seat
B552E	8	19'-9"	S	0"	8'-8"	2'-5"	8'-8"	-	-	0"	-	-	-	Bottom Wingwall Stirrup
B553E	12	15'-1"	S	0"	6'-4"	2'-5"	6'-4"	-	-	0"	-	-	-	Bottom Wingwall Stirrup
B554E	43	7'-6"	V	-	-	-	3'-9"	3'-9"	-	-	2'-8"	-	-	Abutment Top
B555E	43	6'-0"	L	3'-0"	3'-0"	-	-	-	-	-	-	-	-	Abutment Top
B556E	27	6'-7"	L	5'-9"	10"	-	-	-	-	-	-	-	-	Dowels into Approach Slab
B557E	6	8'-3"	S	0"	2'-11"	2'-5"	2'-11"	-	-	0"	-	-	-	Top Wingwall Stirrup
B558E	12	12'-11"	S	0"	5'-3"	2'-5"	5'-3"	-	-	0"	-	-	-	Top Wingwall Stirrup
B559E	4	6'-11"	V	-	-	-	1'-10"	5'-1"	-	-	2'-6"	-	-	Top Wingwall
B560E	4	7'-1"	V	-	-	-	1'-9"	5'-4"	-	-	3'-0"	-	-	Top Wingwall
B561E	20	3'-8 1/2"	PC	5 1/2"	-	2'-5"	-	-	-	10"	-	-	-	Stirrup
B562E	4	4'-2 1/2"	PC	5 1/2"	-	2'-11"	-	-	-	10"	-	-	-	Stirrup
B563E	15	4'-1"	S	0"	10"	2'-5"	10"	-	-	0"	-	-	-	End of Wingwall
B564E	1	7'-11"	S	0"	10"	6'-3"	10"	-	-	0"	-	-	-	End of Wingwall
B565E	1	8'-4"	S	0"	10"	6'-8"	10"	-	-	0"	-	-	-	End of Wingwall
							Pier No. 1							
1P550	64	9'-0"	S	0"	2'-6"	4'-0"	2'-6"	-	-	0"	-	-	-	Pier Cap Stirrup
1P551	4	4'-2"	S	0"	10"	2'-6"	10"	-	-	0"	-	-	-	Pier Cap End
1P650	14	10'-0"	S	0"	3'-1"	3'-10"	3'-1"	-	-	0"	-	-	-	Pier Cap End
1P651	24	12'-8"	SL	1'-0"	3'-10"	3'-0"	3'-10"	-	-	1'-0"	-	-	-	Pier Cap Pile
1P950	12	33'-8"	S	0"	1'-7"	30'-6"	1'-7"	-	-	0"	-	-	-	Pier Cap
							Pier No. 2							
2P550	64	9'-0"	S	0"	2'-6"	4'-0"	2'-6"	-	-	0"	-	-	-	Pier Cap Stirrup
2P551	4	4'-2"	SL	0"	10"	2'-6"	10"	-	-	0"	-	-	-	Pier Cap End
2P650	14	10'-0"	S	0"	3'-1"	3'-10"	3'-1"	-	-	0"	-	-	-	Pier Cap End
2P651	24	12'-8"	SL	1'-0"	3'-10"	3'-0"	3'-10"	-	-	1'-0"	-	-	-	Pier Cap Pile
2P950	12	33'-8"	S	0"	1'-7"	30'-6"	1'-7"	-	-	0"	-	-	-	Pier Cap
							Superstructure							
S550E	730	6'-2"	C	7"	5'-7"	0"	-	-	-	-	-	-	-	Overhang
S551E	506	5'-6"	SC	10"	1'-3"	1'-4"	1'-3"	10"	-	-	-	1'-5"	-	Curb Stirrups
MARK	QTY.	LENGTH	TYPE	A	B	C	D	E	F	G	H	O	R	LOCATION

TYPE - BENDING DIAGRAMS

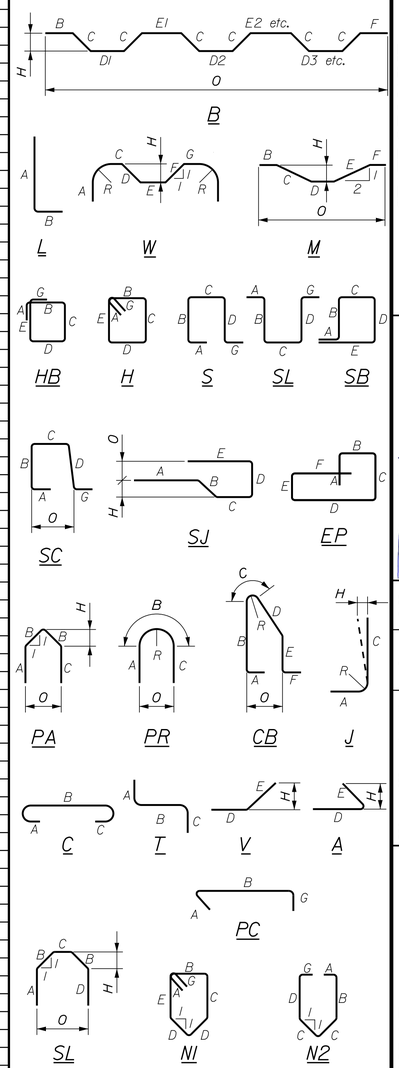

All dimensions are out-to-out of bar.

Bending details and hooks shall conform to the recommendations of the current revision of ACI Standard 315 and ACI Standard 318.

Reinforcing Bar: ASTM A615/A615M, Grade 60

GENERAL NOTES

1. The first two digits following the letter(s) of the mark indicate the size ofthe bar:

   Mark "A0502" = bar size #5
   Mark "P0805" = bar size #8
   Mark "S1150" = bar size #11

2. Each crank bar, Type B, may be replaced by two (2) straight bars (one top and one bottom) of the same bar size as the crank bar. Payment in either case shall be based on crank bars as schedule on the plans.

3. Bar marks ending with an "E" indicate epoxy coating required.

T·Y·LIN INTERNATIONAL

STATE OF MAINE
DEPARTMENT OF TRANSPORTATION

STP-2049(600)

WIN 20496.00

BRIDGE PLANS

BRIDGE NO. 3562

STATE OF MAINE
DANIEL S. MYERS
No. 12572
LICENSED
PROFESSIONAL ENGINEER

SIGNATURE		
12572	P.E. NUMBER	
March 28, 2016	DATE	

PROJ. MANAGER	Michael Wight	
DESIGN-DETAILED	B. Toothaker	1/16
CHECKED-REVIEWED	D. Myers	2/16
DESIGN2-DETAILED2		
DESIGN3-DETAILED3		
REVISIONS 1		
REVISIONS 2		
REVISIONS 3		
REVISIONS 4		
FIELD CHANGES		

GOODWIN BRIDGE
OVER WEST BRANCH UNION RIVER
MARIAVILLE HANCOCK COUNTY

REINFORCING SCHEDULE 1

SHEET NUMBER

30

OF 32

Filename: ...\030_Reinforcing_Schedule.dgn Division: HIGHWAY Username: Date:3/28/2016

PLAN LEGEND

Town, County, State	New R/W Along Existing R/W	Existing / Proposed: Sanitary Sewer, Telephone Line, Electric Line, Water Line, Underdrain Line, Gas Line, Guardrail, Culvert	Existing / Proposed: Traveled Way, Ditch, Catch Basin, Manhole, Sewer Manhole, Utility Pole, Fire Hydrant, Curbing	Cut Line, Fill Line, Stonewall, Retaining Wall, Baseline (10+00, 11+00, 12+00), Monument, Traverse Point, Iron Rod Found (IRF), Pipe Found (IPF), Replacement Pin Set
Approx. Property Lines — P.L.	Building, Clearing Limit Line — CLL			
Existing Right of Way	Trees: Conifer, Deciduous			
Limits of Wrought Portion — L.O.W.P.	Tree Line, Bush Line			
Control Of Access — C.O.A.	Water Edge			
New Right of Way	Ledge, Rock/Boulder, Flag Pole			
New Easement	Fence: CHAIN LINK, BARB WIRE, STOCKADE			
New Temporary Rights	Sign, Well, Mailbox			
New R/W Within Existing R/W				

STATE OF MAINE
REGISTRY OF DEEDS
COUNTY _____
RECEIVED _____, _____
at _____h _____m _____M and recorded in
Plan Book _____, Page _____
Attest: _____
REGISTER

THIS PLAN WAS PREPARED IN CONNECTION WITH THE DEPARTMENT'S ACQUISITION OF REAL PROPERTY FOR TRANSPORTATION PURPOSES. IT CANNOT BE USED TO ESTABLISH LEGAL BOUNDARIES BETWEEN ABUTTING PROPERTY OWNERS.

NOTE: PRESCRIPTIVE EASEMENT FOR HIGHWAY PURPOSES WITHIN LIMITS OF WROUGHT PORTION (L.O.W.P.)

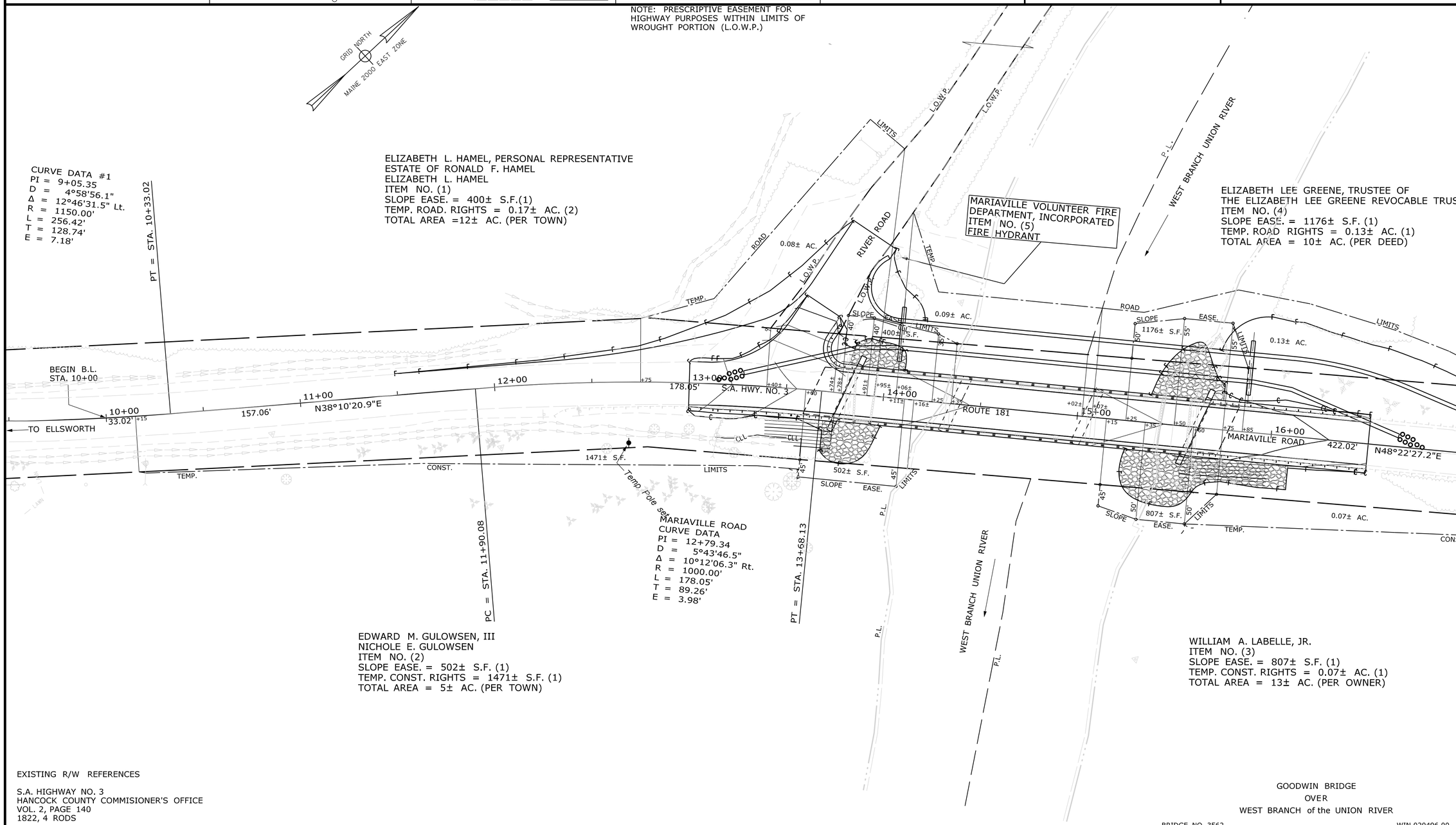

EXISTING R/W REFERENCES

S.A. HIGHWAY NO. 3
HANCOCK COUNTY COMMISIONER'S OFFICE
VOL. 2, PAGE 140
1822, 4 RODS

GOODWIN BRIDGE
OVER
WEST BRANCH of the UNION RIVER

BRIDGE NO. 3562 WIN 020496.00

ITEM	TECH	CHECKED
EXISTING CONDITION PLAN	BDM	
FINAL RIGHT OF WAY	BDM	
AREAS	BDM	

STATE OF MAINE
DEPARTMENT OF TRANSPORTATION
16 STATE HOUSE STATION - AUGUSTA, ME 04333-0016 - 207-624-3460
MARIAVILLE
RIGHT OF WAY MAP

REVISIONS

NO.	DATE	DESCRIPTION	BY

PLAN FILED IN PLAN BOOK PAGE COUNTY RECORD

NO.	GRANTOR	INSTRUMENT	DATE	BOOK	PAGE
		COND.	2/8/16	6522	1

DAVID BERNHARDT
COMMISSIONER
JOYCE NOEL TAYLOR
CHIEF ENGINEER
DATE

To the best of my knowledge and belief the Highway Right of Way lines depicted hereon are based upon a survey conforming to the Standards of Practice promulgated by the Maine Board of Licensure for Professional Land Surveyors 02-360 CMR, Chapter 90; Exceptions: (1) No separate survey report, (2) Monumentation only as shown on plan. See sheet X of this plan set for coordinates. (3) Other boundary lines, including lines between abutters are approximate and for general reference purposes only.

STATE AID HIGHWAY NO. 3
ROUTE 181 MARIAVILLE ROAD
MARIAVILLE HANCOCK COUNTY
FEDERAL AID PROJECT NO. STP-2049(600)

NOVEMBER 2015 | RIGHT-OF-WAY MAP | D.O.T. FILE NO. 5-302
SCALE 1" = 25' | SHEET 1 OF 2

SHEET NUMBER
31
OF 32

Filename: ...\00\ROW\MSTA\001_RWPLAN1.dgn Division: BRIDGE Username: david.sullivan Date:3/28/2016

PLAN LEGEND

Town, County, State
Approx. Property Lines — P.L.
Existing Right of Way
Limits of Wrought Portion — L.O.W.P.
Control Of Access — C.O.A.
New Right of Way
New Easement
New Temporary Rights
New R/W Within Existing R/W

New R/W Along Existing R/W
Building — Clearing Limit Line — CLL
Trees — Conifer — Deciduous
Tree Line — Bush Line
Water Edge
Ledge — Rock/Boulder — Flag Pole
Fence — CHAIN LINK — BARB WIRE — STOCKADE
Sign — Well — Mailbox

	Existing	Proposed
Sanitary Sewer		
Telephone Line	T	T
Electric Line	E	E
Water Line	W	W
Underdrain Line		
Gas Line	G	G
Guardrail		
Culvert		

	Existing	Proposed
Traveled Way		
Ditch		
Catch Basin		
Manhole		
Sewer Manhole		
Utility Pole		
Fire Hydrant		
Curbing		

Cut Line — Fill Line
Stonewall — Retaining Wall
Baseline — 10+00 — 11+00 — 12+00
Monument — Traverse Point
Iron Rod Found — IRF — Pipe Found — IPF
Replacement Pin Set

STATE OF MAINE
REGISTRY OF DEEDS
COUNTY _____
RECEIVED _____, _____
at _____h_____m_____M and recorded in
Plan Book _____, Page _____
Attest: _____
REGISTER

THIS PLAN WAS PREPARED IN CONNECTION WITH THE DEPARTMENT'S ACQUISITION OF REAL PROPERTY FOR TRANSPORTATION PURPOSES. IT CANNOT BE USED TO ESTABLISH LEGAL BOUNDARIES BETWEEN ABUTTING PROPERTY OWNERS.

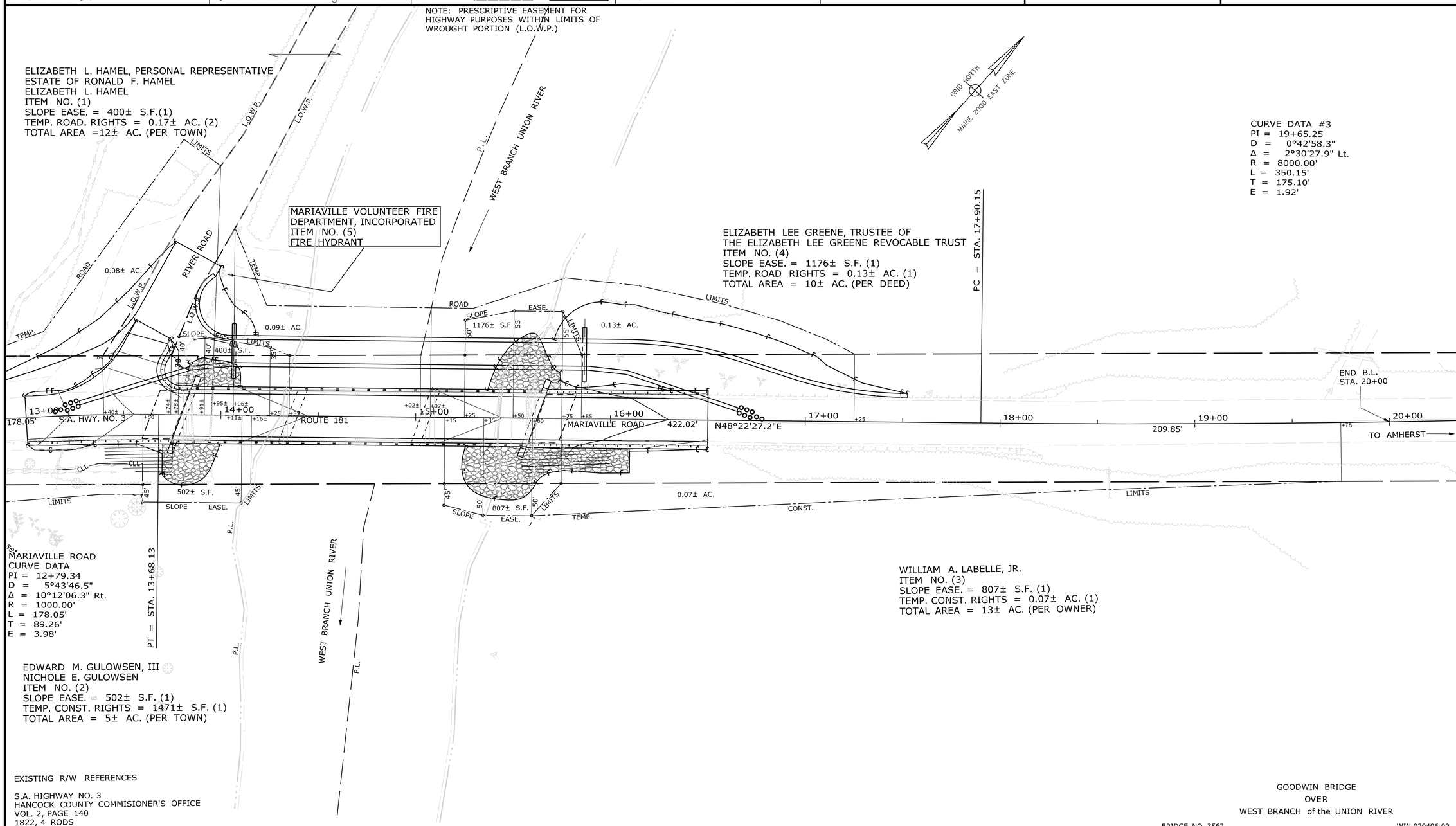

EXISTING R/W REFERENCES

S.A. HIGHWAY NO. 3
HANCOCK COUNTY COMMISIONER'S OFFICE
VOL. 2, PAGE 140
1822, 4 RODS

GOODWIN BRIDGE
OVER
WEST BRANCH of the UNION RIVER

BRIDGE NO. 3562 — WIN 020496.00

ITEM	TECH	CHECKED
EXISTING CONDITION PLAN	BDM	
FINAL RIGHT OF WAY	BDM	
AREAS	BDM	

STATE OF MAINE
DEPARTMENT OF TRANSPORTATION
16 STATE HOUSE STATION - AUGUSTA, ME 04333-0016 - 207-624-3460
MARIAVILLE
RIGHT OF WAY MAP

REVISIONS

NO.	DATE	DESCRIPTION	BY

PLAN FILED IN PLAN BOOK PAGE COUNTY RECORD

NO.	GRANTOR	INSTRUMENT	DATE	BOOK	PAGE
		COND.	2/8/16	6522	1

DAVID BERNHARDT
COMMISSIONER
JOYCE NOEL TAYLOR
CHIEF ENGINEER
DATE

To the best of my knowledge and belief the Highway Right of Way lines depicted hereon are based upon a survey conforming to the Standards of Practice promulgated by the Maine Board of Licensure for Professional Land Surveyors 02-360 CMR, Chapter 90; Exceptions: (1) No separate survey report, (2) Monumentation only as shown on plan. See sheet X of this plan set for coordinates. (3) Other boundary lines, including lines between abutters are approximate and for general reference purposes only.

STATE AID HIGHWAY NO. 3
ROUTE 181 MARIAVILLE ROAD
MARIAVILLE HANCOCK COUNTY
FEDERAL AID PROJECT NO. STP-2049(600)

NOVEMBER 2015 | RIGHT-OF-WAY MAP | D.O.T. FILE NO. 5-302
SCALE 1" = 25' | SHEET 2 OF 2

SHEET NUMBER
32
OF 32

Filename: ...\00\ROW\MSTA\002_RWPLAN2.dgn Division: BRIDGE Username: david.sullivan Date:3/28/2016