STATE OF MAINE
DEPARTMENT OF TRANSPORTATION
16 STATE HOUSE STATION
AUGUSTA, MAINE 04333-0016

Paul R. LePage
GOVERNOR

David Bernhardt
COMMISSIONER

April 25, 2016
Subject: Bridge Replacement
State WIN: 020496.00
Location: **Mariaville**
Amendment No. 1

Dear Sir/Ms:

The Contract shall consider the following changes to the Bid Documents:

ADD "SPECIAL PROVISION, SECTION 105 SCOPE OF WORK (Special Detour)", 1 page dated April 22, 2016, after page 52

REMOVE page 55, "SPECIAL PROVISION, SECTION 107 TIME (Supplemental Liquidated Damaged for Limitations of Operations)" and **REPLACE** with the attached new "SPECIAL PROVISION, SECTION107 TIME (Supplemental Liquidated Damaged for Limitations of Operations)", 1 page, dated April 22, 2016.

In the Plan Set:

The following sheets are to be REMOVED from the existing plan set and then REPLACED with the corresponding attached revised sheets:

REMOVE sheet	and **REPLACE** with sheet
3	3A
17	17A
30	30A

The following questions have been received:

Question: May we substitute W24 x 104 beams for the plate girders with the 3/4" x 12" top and bottom flanges?

Response: No. The section properties of the proposed rolled beam do not match the welded beam.

Question: May we substitute W24 x 168 beams for the plate girders with the 1 1/8" x 12" top and bottom flanges?

Response: No. A W24x168 is not available per AISC Manual of Steel Construction.

Question: Bar Marks S650E & S651E are not listed on the bar schedule. Please advise.

Response: A new bar schedule will be provided.

Question: Are the Bars in the FRP pipe piles uncoated or epoxy coated?

Response: Uncoated.

Question: Is the reinforcing required the full length of the FRP composite pile?

Response: Yes.

Question: Can #5 hoops at 3" spacing be substituted for the #5 spirals in the FRP piles?

Response: Yes.

Question: With a very short water window, the need for cofferdams to install riprap, and the span requirement for the temporary (note 25 on p. 3) we do not think there is enough time to open the new bridge to traffic by Nov 20, 2016. We request that the new bridge opening be extended to 2017 with the final completion date of September 30, 2017 remaining the same.

Response: Please refer to the new SPECIAL PROVISION, SECTION107 TIME (Supplemental Liquidated Damaged for Limitations of Operations) 1 page, dated April 22, 2016.

Consider this change and information prior to submitting your bid on April 27, 2016

Sincerely,

George Macdougall

George M. A. Macdougall P.E.
Contracts & Specifications Engineer

Mariaville
WIN 020496.00
April 22, 2016

SPECIAL PROVISION
SECTION 105
SCOPE OF WORK
(Special Detour)

Subsection 105.4.5 of the Standard Specifications is amended as follows:

During an approved suspension, the Contractor shall maintain the special detour (i.e. temporary detour) by plowing snow, controlling ice and patching or retreating the surface as directed by the Resident when its is decided that additional winter maintenance is needed beyond what is provided by the Department.

The Town of Mariaville has a contract with Craig Fellis to provide winter maintenance of Route 181. The Contractor shall coordinate with Fellis Construction to ensure their equipment will not be inhibited by the special detour.

SPECIAL PROVISION
SECTION 107
TIME
(Supplemental Liquidated Damages for Limitations of Operations)

Append Section 107.8 with the following:

107.8.2 Limitations of Operations

The Contractor shall conduct operations in such a manner that the new bridge will be open to two lanes of traffic with surface pavement complete, and bridge rail installed and accepted on or before July 15, 2017. Supplemental liquidated damages will be assessed at the rate of Five Hundred Dollars ($500.00) per day for every calendar day the new bridge is not open to two lanes of traffic after November 20, 2016.

GENERAL CONSTRUCTION NOTES

1. All utility facilities shall be adjusted by the respective utilities unless otherwise noted.

2. The clearing limits as shown on the plans are approximate. The exact limits shall be established in the field by the Resident. Payment for clearing will be considered incidental to related contract items.

3. Granular borrow used to backfill muck excavation or in low wet areas to 1' above water level or old ground shall meet requirements for Granular Borrow for Underwater Backfill.

4. Existing inslopes steeper than 2:1 in proposed fill areas shall be benched as directed by the Resident.

5. Guardrail posts as shown in the Standard Details shall be modified from the indicated length of 6 feet to a length of 7 feet, with an embedment of 4.5 feet. Payment will be considered incidental to the guardrail pay items.

6. A low volume guardrail end shall be installed concurrently with the placement of each section of beam guardrail.

7. Holes created by Guardrail removal will be filled and compacted with approved materials as directed by the Resident. Payment to be considered incidental to the guardrail items.

8. Two Reflectorized Flexible Guardrail Markers (Item 606.353) will be installed at each proposed guardrail end.

9. Connections for proposed guardrail to existing guardrail will be considered incidental to 606 Items.

10. Erosion Control Mix shall be placed to a nominal depth of 4 inches in all seeding areas unless otherwise noted or directed by the Resident.

11. Any base pavement not surfaced before winter will require temporary pavement markings of paint, both yellow centerline and white edge lines and will be considered part of Item 627.76

12. Do not excavate for Aggregate Subbase Course where existing material is suitable as determined by the Resident.

13. For easements, construction limits, and right-of-way lines, refer to Right of Way Maps.

14. Place a 24 inch wide strip of Temporary Erosion Control Blanket on the side slopes along the top of the riprap and behind the wingwalls.

15. Protective coating for concrete surfaces shall be applied to the following areas:

    All exposed surfaces of concrete curbs and sidewalks.
    Fascia down to drip notch.
    Concrete wearing surfaces
    Top of abutment backwalls and to one foot below the top of backwalls on the fill side.

16. Project information referred to below may be accessed at the following MaineDOT web address: http://www.maine.gov/mdot/contractors/*projecttbl

17. The existing bridge plans may be accessed at the MaineDOT web address. The plans are reproductions of the original drawings as prepared for the construction of the bridge. It is very unlikely that the plans will show any construction field changes or any alterations which may have been made to the bridge during its life span.

1 18. The project geotechnical report titled: Geotechnical Design Report for the Replacement of Goodwin Bridge Route 181 over West Branch of the Union River, MaineDOT Soils Report No. 2015-12, June 12, 2015, with Addendum #1, dated February 16, 2016, may be accessed at the MaineDOT web address.

19. Geotechnical information furnished or referred to in this plan set is for the use of the Bidders and the Contractor. No assurance is given that the information or interpretations will be representative of actual subsurface conditions at the construction site. MaineDOT will not be responsible for the Bidders' or Contractor's interpretations of, or conclusions drawn from, the geotechnical information. The boring logs contained in the plan set present factual and interpretive subsurface information collected at discrete locations. Data provided may not be representative of the subsurface conditions between the boring locations.

20. The hydrologic report of the bridge site may be accessed at the MaineDOT web address. The hydrologic report is based on MaineDOT's interpretation of the information obtained for the subject site. No assurance is given that the information or the conclusions of the report will be representative of actual conditions at the time of construction.

21. Quantities included for pay items measured and paid for by Lump Sum are estimated quantities and are provided by MaineDOT for informational purposes only. Lump Sum pay items will be paid for at the Contract Bid amount, with no addition or reduction in payment to the Contractor if the actual final quantities are different from the MaineDOT provided estimated quantities, except as follows:

    a. If a Lump Sum pay item is eliminated, the requirements of Standard Specifications Section 109.2, Elimination of Items, will take precedence.

    b. If other Contract Documents specifically allow a change in payment for a Lump Sum pay item, those requirements will be followed.

    c. If a design change results in changes to estimated quantities for Lump Sum pay items, price adjustments will be made in accordance with Standard Specifications Section 109.7, Equitable Adjustments to Compensation.

22. The existing bridge shall be removed by and become the property of the Contractor. The steel portions of the existing bridge are coated with a lead-based paint system. The Contractor is responsible for the containment, proper management and disposal of all lead-contaminated hazardous waste generated by the process of demolishing the bridge. The Contractor is responsible for implementing appropriate OSHA mandated personal protection standards related to this process. Once the existing bridge is removed, the Contractor is solely responsible for the care, custody and control of the components of the existing bridge and any hazardous waste generated as a result of the storage, recycling or disposal of the bridge component including lead-coated steel. The Contractor shall recycle or reuse the steel in accordance with the Maine Department of Environmental Protection's "Maine Hazardous Waste Management Regulations," Chapter 850. A copy of this regulation is available at MaineDOT's offices on Child Street in Augusta. Payment for all labor, materials, equipment and other costs required to remove and dispose of the existing bridge will be considered incidental to the bridge removal pay item.

23. The existing abutments and piers shall be removed in their entirety. Timber pile foundations in conflict with proposed piles, as determined by the Resident, shall be removed in their entirety.

24. The Contractor is made aware that the existing timber to be removed contains creosote.

25. The span between the centerline bearings of the abutments for the temporary bridge shall be equal to or greater than the span between the centerline bearings of the existing bridge abutments.

26. All costs for cofferdams, including pumping, maintenance, related temporary soil erosion and water pollution controls and removal, will not be paid for directly, but will be considered incidental to related Contract items.

TYLIN INTERNATIONAL

STATE OF MAINE
DEPARTMENT OF TRANSPORTATION

STP-2049(600)

WIN 20496.00

BRIDGE NO. 3562

BRIDGE PLANS

PROJ. MANAGER	Michael Wight	BY	DATE	
DESIGN-DETAILED	D. Myers	P. McClure	9/15	
CHECKED-REVIEWED	J. Olund	J. Olund	9/15	SIGNATURE
DESIGN2-DETAILED2				
DESIGN3-DETAILED3				P.E. NUMBER
REVISIONS 1	Revise Geotech info		4/16	
REVISIONS 2				
REVISIONS 3				DATE
REVISIONS 4				
FIELD CHANGES				

GOODWIN BRIDGE
OVER WEST BRANCH UNION RIVER
MARIAVILLE HANCOCK COUNTY

GENERAL NOTES

SHEET NUMBER
3A
OF 32

Date:4/21/2016 Username: Division: HIGHWAY Filename: ...\MSTA\003A_General_Notes.dgn

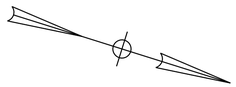

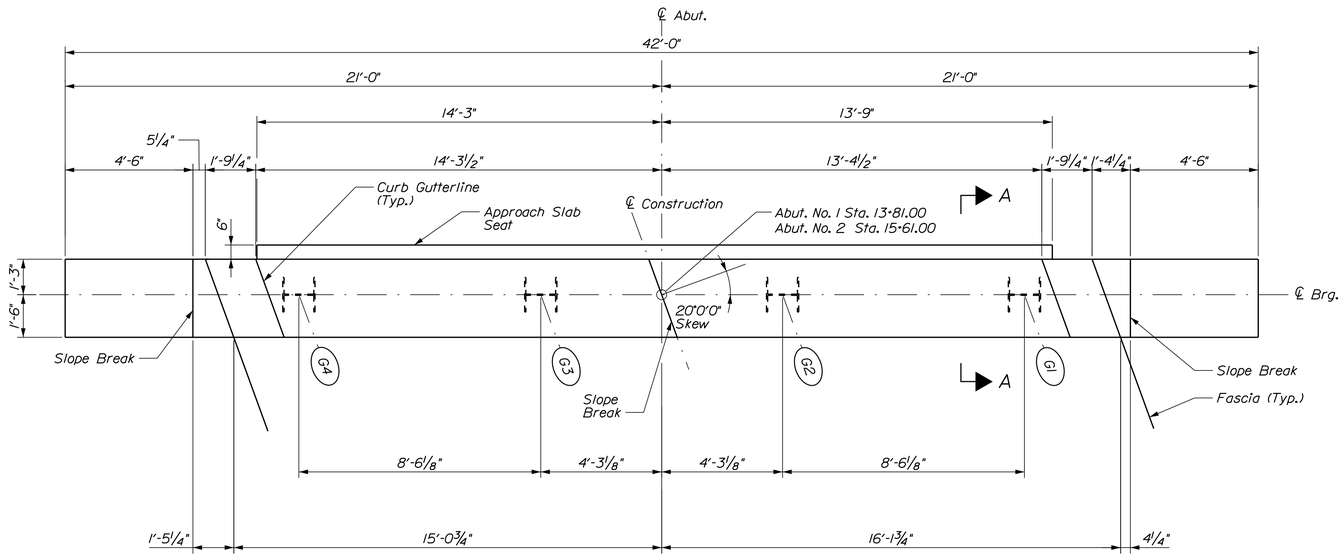

ABUTMENT - PLAN

(Abutment No. 1 Shown, Abutment No. 2 Similar)

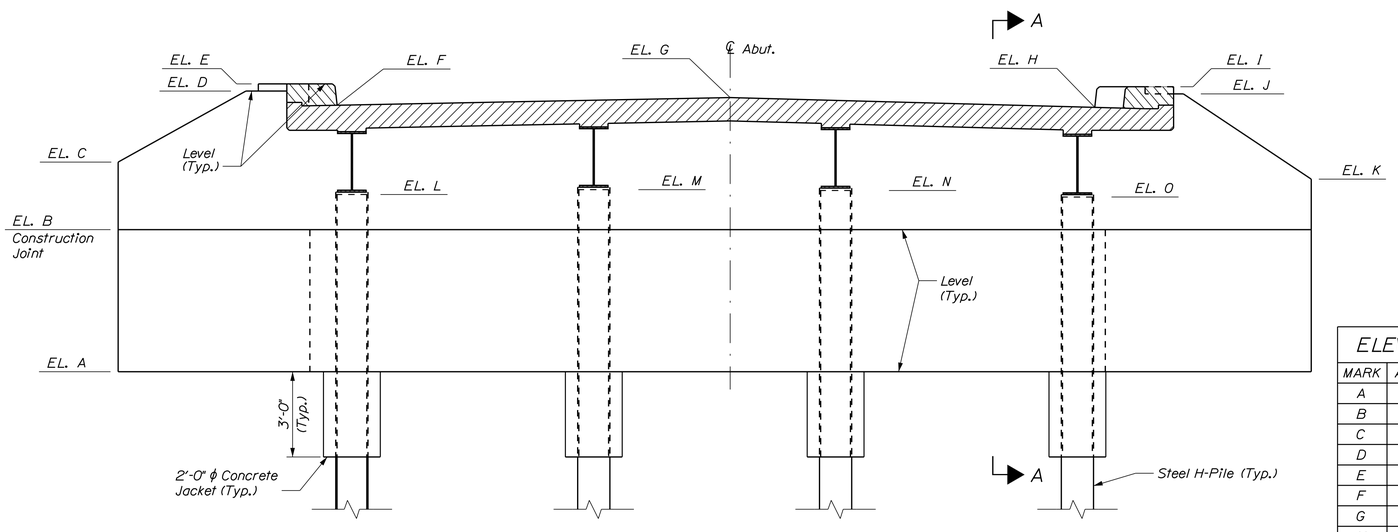

ABUTMENT - ELEVATION

(Abutment No. 1 shown, Abutment No. 2 similar)
(All elevations are at back face of abutment except pile-cut off elevations, which are at ℄ Brg.)
(End Diaphragms not shown for clarity)

ELEVATION TABLE

MARK	ABUT NO. 1	ABUT NO. 2
A	103.00	101.25
B	108.00	106.25
C	110.38	108.45
D	112.88	110.95
E	113.13	111.20
F	112.38	110.45
G	112.65	110.83
H	112.28	110.55
I	113.03	111.30
J	112.78	111.05
K	109.78	108.05
L	109.24	107.35
M	109.41	107.58
N	109.38	107.61
O	109.15	107.44

ABUTMENT NOTES:

1. See "Abutment Section" Sheet for Section A-A Typical Abutment Section.
2. Reinforcing steel shall have a minimum concrete cover of 2" unless otherwise noted.
3. Structural Earth Excavation, Abutments and Retaining Walls, required more than 12 inches below the bottom of the structure, will be paid for in accordance with Standard Specifications Section 206, Structural Excavation.
4. Payment for the concrete jacket around the tops of the H-Piles will not be paid for directly. Payment will be incidental to Pay Item 502.219, Structural Concrete Abutment and Retaining Walls. Fill concrete may be used for the concrete jackets.
5. Cover Joints where waterstops are not required in accordance with Standard Detail 502(01).
6. Construct French Drains behind the abutments and wingwalls in accordance with Standard Specifications Section 512, French Drains.
7. Abutments and Wingwalls shall be back filled with Granular Borrow Material for Underwater Backfill. Pay limits will be in accordance with Section A-A Typical Abutment Section on "Abutment Section" Sheet.

PILE NOTES:

1. H-Pile material shall be ASTM A572, Grade 50.
2. The maximum calculated factored axial pile loads are:
   - Abutment No. 1: 235 kips
   - Pier No. 1: 305 kips
   - Pier No. 2: 305 kips
   - Abutment No. 2: 235 kips
3. Estimate of piles required:
   - Abutment No. 1: 4 ~ HP 14x89 @ 56 ft
   - Pier No. 1: 4 ~ HP 14x117 @ 72 ft
   - Pier No. 2: 4 ~ HP 14X117 @ 89 ft
   - Abutment No. 2: 4 ~ HP 14x89 @ 84 ft

   1 The order lengths of the piles shall include an additional 5 feet of length for each test pile to accommodate dynamic pile testing equipment. Additional pile length may be required to account for locations where bedrock is deeper than that encountered in the borings.
4. Piles shall not be out of position shown by more than 2 inches in any direction.
5. 1 Piles shall be driven to bedrock in accordance with Standard Specification 501, Foundation Piles.
6. The Contractor shall perform and submit one (1) wave equation analysis for review and acceptance by the Resident for the abutment piles and one (1) for the pier piles (2 total). The maximum allowable driving stress is 0.90 times Fy. The submittal analysis shall include the proposed stopping criteria based on the wave equation analysis and the proposed driving system. The stopping criteria shall include the blows per inch and the number of 1 inch intervals at which pile installation may be terminated. The cost of performing the wave equation analyses will be considered incidental to Item No. 501.92, Pile Driving Equipment Mobilization.
7. The Contractor shall perform one (1) dynamic load test with 24-hour (min) restrike at each substructure location to confirm the nominal resistance of the piles. The required nominal resistance for the pile is the factored axial pile load divided by a resistance factor of 0.65 per the LFRD Specifications. Each dynamic test shall be conducted on the first production pile driven at each substructure.
8. All piles shall be equipped with a pile tip in accordance with Standard Specification Section 501.10, Prefabricated Pile Tips.
9. Payment for Pile Cap Plates will be incidental to related Pile Pay Items.
10. All FRP Casings shall be filled with Class A Concrete. Concrete for filling FRP Casings and reinforcing within or extending from the FRP Casings will be considered incidental to related pay items.
11. Holes shall be drilled in the pier piles after installation to allow placement of two longitudinal reinforcing bars. Payment shall be considered incidental to related pay items.
12. 1 The Contractor shall take care to prevent damage to the FRP Casings during driving activities. All driving frames shall be lined to help prevent damage to the casing surface. Driving frame liners shall be approved by the Resident.

T·Y·LIN INTERNATIONAL

STATE OF MAINE
DEPARTMENT OF TRANSPORTATION

STP-2049(600)

WIN 20496.00

BRIDGE NO. 3562

BRIDGE PLANS

		BY	DATE
PROJ. MANAGER	Michael Wight		
DESIGN-DETAILED	D. Myers	P. McClure	9/15
CHECKED-REVIEWED	R. Hebert	R. Hebert	9/15
DESIGN2-DETAILED2			
DESIGN3-DETAILED3			
REVISIONS 1	Revise Pile Notes		4/16
REVISIONS 2			
REVISIONS 3			
REVISIONS 4			
FIELD CHANGES			

SIGNATURE

P.E. NUMBER

DATE

GOODWIN BRIDGE
OVER WEST BRANCH UNION RIVER
MARIAVILLE HANCOCK COUNTY

ABUTMENT PLAN & ELEVATION

SHEET NUMBER

17A

OF 32

Filename: ...\017A_Abut_Plan_Elevation.dgn Division: HIGHWAY Username: Date:4/21/2016

STRAIGHT BARS

MARK	QTY.	LENGTH	LOCATION	MARK	QTY.	LENGTH	LOCATION
			Approach Slabs				
AS501	32	26'-3"	Approach Slab, Transverse				
AS601	100	15'-2"	Approach Slab, Longitudinal				
			Abutment No. 2				
A500E	16	12'-2"	Wingwall, Longitudinal				
A501E	4	11'-4"	Wingwall, Longitudinal				
A502E	37	6'-10"	Abutment Stem, Vertical				
A600E	20	27'-8"	Abutment Stem, Longitudinal				
A800E	32	12'-4"	Wingwall, Longitudinal				
A801E	6	9'-10"	Wingwall, Longitudinal				
			Abutment No. 2				
B500E	16	12'-2"	Wingwall, Longitudinal				
B501E	4	11'-4"	Wingwall, Longitudinal				
B502E	37	6'-9"	Abutment Stem, Vertical				
B600E	20	27'-8"	Abutment Stem, Longitudinal				
B800E	32	12'-4"	Wingwall, Longitudinal				
B801E	6	9'-10"	Wingwall, Longitudinal				
			Pier No. 1				
1P800	14	30'-6"	Pier Cap, Longitudinal				
1P900	12	30'-6"	Pier Cap, Longitudinal				
			Pier No. 2				
2P800	14	30'-6"	Pier Cap, Longitudinal				
2P900	12	30'-6"	Pier Cap, Longitudinal				
			Superstructure				
S500E	245	30'-10"	Bottom, Transverse				
S501E	30	38'-11"	Curb, Longitudinal				
S600E	300	38'-11"	Main, Longitudinal				
S601E	58	51'-0"	Over Piers, Longitudinal				

BENT BARS

MARK	QTY.	LENGTH	TYPE	A	B	C	D	E	F	G	H	O	R	LOCATION
							Abutment No. 1							
A550E	37	11'-8"	L	8'-9"	2'-11"	-	-	-	-	-	-	-	-	Vertical Abutment Stirrup
A551E	37	10'-5"	S	0"	2'-11"	4'-7"	2'-11"	-	-	0"	-	-	-	Approach Slab Seat
A552E	8	19'-11"	S	0"	8'-9"	2'-5"	8'-9"	-	-	0"	-	-	-	Bottom Wingwall Stirrup
A553E	12	15'-1"	S	0"	6'-4"	2'-5"	6'-4"	-	-	0"	-	-	-	Bottom Wingwall Stirrup
A554E	43	7'-6"	V	-	-	-	3'-9"	3'-9"	-	-	2'-8"	-	-	Abutment Top
A555E	43	6'-0"	L	3'-0"	3'-0"	-	-	-	-	-	-	-	-	Abutment Top
A556E	27	6'-7"	L	5'-9"	10"	-	-	-	-	-	-	-	-	Dowels into Approach Slab
A557E	6	8'-3"	S	0"	2'-11"	2'-5"	2'-11"	-	-	0"	-	-	-	Top Wingwall Stirrup
A558E	12	12'-11"	S	0"	5'-3"	2'-5"	5'-3"	-	-	0"	-	-	-	Top Wingwall Stirrup
A559E	4	6'-11"	V	-	-	-	1'-10"	5'-1"	-	-	2'-6"	-	-	Top Wingwall
A560E	4	7'-1"	V	-	-	-	1'-9"	5'-4"	-	-	3'-0"	-	-	Top Wingwall
A561E	20	3'-9"	PC	5.5"	-	2'-5"	-	-	-	10"	-	-	-	Stirrup
A562E	4	4'-3"	PC	5.5"	-	2'-11"	-	-	-	10"	-	-	-	Stirrup
A563E	15	4'-1"	S	0"	10"	2'-5"	10"	-	-	0"	-	-	-	End of Wingwall
A564E	1	7'-11"	S	0"	10"	6'-3"	10"	-	-	0"	-	-	-	End of Wingwall
A565E	1	8'-6"	S	0"	10"	6'-10"	10"	-	-	0"	-	-	-	End of Wingwall
							Abutment No. 2							
B550E	37	11'-7"	L	8'-8"	2'-11"	-	-	-	-	-	-	-	-	Vertical Abutment Stirrup
B551E	37	10'-5"	S	0"	2'-11"	4'-7"	2'-11"	-	-	0"	-	-	-	Approach Slab Seat
B552E	8	19'-9"	S	0"	8'-8"	2'-5"	8'-8"	-	-	0"	-	-	-	Bottom Wingwall Stirrup
B553E	12	15'-1"	S	0"	6'-4"	2'-5"	6'-4"	-	-	0"	-	-	-	Bottom Wingwall Stirrup
B554E	43	7'-6"	V	-	-	-	3'-9"	3'-9"	-	-	2'-8"	-	-	Abutment Top
B555E	43	6'-0"	L	3'-0"	3'-0"	-	-	-	-	-	-	-	-	Abutment Top
B556E	27	6'-7"	L	5'-9"	10"	-	-	-	-	-	-	-	-	Dowels into Approach Slab
B557E	6	8'-3"	S	0"	2'-11"	2'-5"	2'-11"	-	-	0"	-	-	-	Top Wingwall Stirrup
B558E	12	12'-11"	S	0"	5'-3"	2'-5"	5'-3"	-	-	0"	-	-	-	Top Wingwall Stirrup
B559E	4	6'-11"	V	-	-	-	1'-10"	5'-1"	-	-	2'-6"	-	-	Top Wingwall
B560E	4	7'-1"	V	-	-	-	1'-9"	5'-4"	-	-	3'-0"	-	-	Top Wingwall
B561E	20	3'-9"	PC	5.5"	-	2'-5"	-	-	-	10"	-	-	-	Stirrup
B562E	4	4'-3"	PC	5.5"	-	2'-11"	-	-	-	10"	-	-	-	Stirrup
B563E	15	4'-1"	S	0"	10"	2'-5"	10"	-	-	0"	-	-	-	End of Wingwall
B564E	1	7'-11"	S	0"	10"	6'-3"	10"	-	-	0"	-	-	-	End of Wingwall
B565E	1	8'-4"	S	0"	10"	6'-8"	10"	-	-	0"	-	-	-	End of Wingwall
							Pier No. 1							
1P550	64	9'-0"	S	0"	2'-6"	4'-0"	2'-6"	-	-	0"	-	-	-	Pier Cap Stirrup
1P551	4	4'-2"	S	0"	10"	2'-6"	10"	-	-	0"	-	-	-	Pier Cap End
1P650	14	10'-0"	S	0"	3'-1"	3'-10"	3'-1"	-	-	0"	-	-	-	Pier Cap End
1P651	24	12'-8"	SL	1'-0"	3'-10"	3'-0"	3'-10"	-	-	1'-0"	-	-	-	Pier Cap Pile
1P950	12	33'-8"	S	0"	1'-7"	30'-6"	1'-7"	-	-	0"	-	-	-	Pier Cap
							Pier No. 2							
2P550	64	9'-0"	S	0"	2'-6"	4'-0"	2'-6"	-	-	0"	-	-	-	Pier Cap Stirrup
2P551	4	4'-2"	S	0"	10"	2'-6"	10"	-	-	0"	-	-	-	Pier Cap End
2P650	14	10'-0"	S	0"	3'-1"	3'-10"	3'-1"	-	-	0"	-	-	-	Pier Cap End
2P651	24	12'-8"	SL	1'-0"	3'-10"	3'-0"	3'-10"	-	-	1'-0"	-	-	-	Pier Cap Pile
2P950	12	33'-8"	S	0"	1'-7"	30'-6"	1'-7"	-	-	0"	-	-	-	Pier Cap
							Superstructure							
S550E	730	6'-2"	C	7"	5'-7"	0"	-	-	-	-	-	-	-	Overhang
S551E	506	5'-6"	SC	10"	1'-3"	1'-4"	1'-3"	10"	-	-	-	1'-5"	-	Curb Stirrups
1 S650E	366	16'-2"	C	8"	15'-6"	0"	-	-	-	-	-	-	-	Top Transverse
S651E	366	20'-7"	C	8"	19'-11"	0"	-	-	-	-	-	-	-	Top Transverse

TYPE - BENDING DIAGRAMS

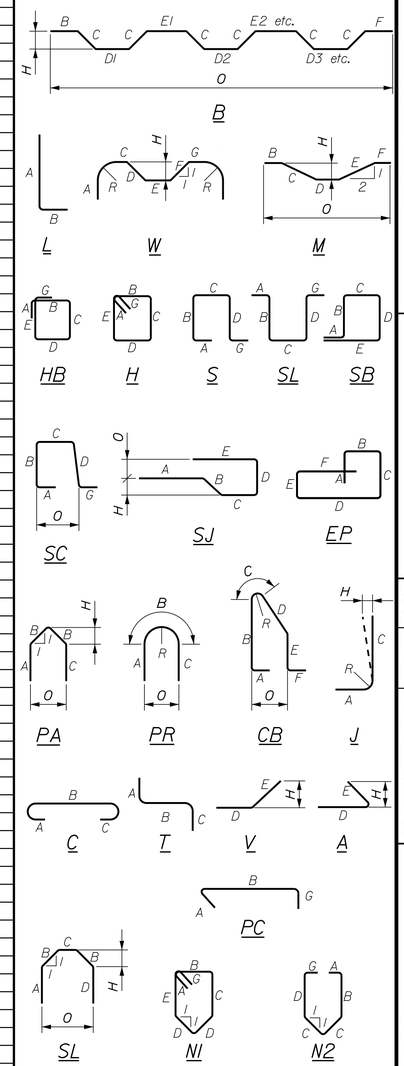

All dimensions are out-to-out of bar.

Bending details and hooks shall conform to the recommendations of the current revision of ACI Standard 315 and ACI Standard 318.

Reinforcing Bar: ASTM A615/A615M, Grade 60

GENERAL NOTES

1. The first two digits following the letter(s) of the mark indicate the size ofthe bar:

   Mark "A0502" = bar size #5
   Mark "P0805" = bar size #8
   Mark "S1150" = bar size #11

2. Each crank bar, Type B, may be replaced by two (2) straight bars (one top and one bottom) of the same bar size as the crank bar. Payment in either case shall be based on crank bars as schedule on the plans.

3. Bar marks ending with an "E" indicate epoxy coating required.

T·Y·LIN INTERNATIONAL

STATE OF MAINE
DEPARTMENT OF TRANSPORTATION

STP-2049(600)

WIN 20496.00

BRIDGE PLANS

BRIDGE NO. 3562

PROJ. MANAGER	Michael Wight			
DESIGN-DETAILED	B. Toothaker	BY	DATE	SIGNATURE
CHECKED-REVIEWED	D. Myers	B. Toothaker	1/16	
DESIGN2-DETAILED2		T. Poulin	2/16	P.E. NUMBER
DESIGN3-DETAILED3				
REVISIONS 1		Missing deck bars added	4/16	DATE
REVISIONS 2				
REVISIONS 3				
REVISIONS 4				
FIELD CHANGES				

GOODWIN BRIDGE
OVER WEST BRANCH UNION RIVER
MARIAVILLE HANCOCK COUNTY

REINFORCING SCHEDULE 1

SHEET NUMBER

30A

OF 32

Filename: ...\030A_Reinforcing_Schedule.dgn Division: HIGHWAY Username: Date:4/21/2016