STATE OF MAINE
DEPARTMENT OF TRANSPORTATION

SPECIFICATIONS

Design: Load and Resistance Factor Design per AASHTO LRFD Bridge Design Specifications, Seventh Edition 2014 with 2015 Interim Revisions.

DESIGN LOADING

Live Load ..... HL - 93 Modified for Strength I

TRAFFIC DATA

Current (2015) AADT	4920
Future (2035) AADT	5900
DHV - % of AADT	12
Design Hour Volume	708
Heavy Trucks (% of AADT)	5
Heavy Trucks (% of DHV)	5
Directional Distribution (% of DHV)	55
18 kip Equivalent P 2.0	168
18 kip Equivalent P 2.5	160
Design Speed (mph)	25

HYDROLOGIC DATA

Drainage Area	30.70 sq mi
Design Discharge (Q50)	1,981.1 cfs
Check Discharge (Q100)	2,272.5 cfs
Ordinary High Water Discharge (Q1.1)	374.2 cfs

CAMDEN
KNOX COUNTY
BAKERY BRIDGE
OVER
MEGUNTICOOK RIVER
WASHINGTON STREET
PROJECT NO. STP-2049(100)
PROJECT LENGTH 0.028 mi.
BRIDGE NO. 2981

LIST OF DRAWINGS

Title Sheet	1
Quantities & Notes	2
General Plan	3
Profile	4
Curb Geometry	5
BLP, ISP, & Boring Logs	6
Highway Approach Cross - Sections	7-10
Abutment Details	11
Abutment No. 1	12,13
Abutment No. 2	14,15
Abutment No, 1 Rehab.	16
Abutment No. 2 Rehab.	17
Precast Voided Slabs	18,19
Superstructure	20,21
Texas Rail Layout	22
Reinforcing Steel Schedule	23
Detour Plan	24,25
Right of Way Map	26
Sewer Plan	C1

MATERIALS

Concrete:

Barriers, Curbs, & Sidewalks	Class "LP"
Precast	Class "P"
All Other	Class "A"
Reinforcing Steel	ASTM A 615/A 615M, Grade 60
Prestressing Strands	AASHTO 203 (ASTM A 416), Grade 270, Low Relaxation

BASIC DESIGN STRESSES

Concrete	f 'c = 4000 psi
Precast Concrete	f 'c = 7,500 psi
	f 'ci = 6,000 psi
Reinforcing Steel	f y = 60,000 psi
Prestressing Strand	F µ = 270,000 psi

UTILITIES

Central Maine Power Company	Maine Water
Fairpoint Communications	Camden Wastewater Dept.
Lincolnville Telephone Co.	Time Warner Cable

MAINTENANCE OF TRAFFIC

Maintain two-way traffic on signed in-town detour route.

PROJECT LOCATION	Immediately Adjacent to the Intersection of Washington Street (Rte 105) and Mechanic Street 44°12'36.59" N, 69°04'00.03" W
PROGRAM AREA	Bridge
OUTLINE OF WORK	Superstructure replacement, abutment rehabilitation, and pier removal of Bakery Bridge.

STATE OF MAINE
DEPARTMENT OF TRANSPORTATION

		DATE
APPROVED	COMMISSIONER:	2/12/16
	CHIEF ENGINEER:	2-12-16

STATE OF MAINE · JOHN P. BYATT No. 9741 · LICENSED PROFESSIONAL ENGINEER

SIGNATURE	
P.E. NUMBER	9741
DATE	1/25/2016

PROJECT INFORMATION	
PROGRAM	BRIDGE
PROJECT MANAGER	JOEL KITTREDGE
DESIGNER	JOE STILWELL
CONSULTANT	
PROJECT RESIDENT	
CONTRACTOR	
PROJECT COMPLETION DATE	

WIN 20491.00

STP-2049(100)

CAMDEN
BAKERY BRIDGE

TITLE SHEET

SHEET NUMBER
1
OF 26

Filename:\00\BRIDGE\MSTA\001_Title.dgn Division: BRIDGE Username: Brian.J.Nichols Date:1/20/2016

ESTIMATED QUANTITIES			
ITEM NO.	DESCRIPTION	QUANTITY	UNIT
202.12	REMOVING EXISTING STRUCTURAL CONCRETE	61	CY
202.127	REMOVE EXISTING BITUMINOUS PAVEMENT (90 SY)	1	LS
202.19	REM. EXISTING BRIDGE (280 CY)	1	LS
203.20	COMMON EXCAVATION	110	CY
203.2318	DISPOSAL OF SPECIAL WASTE	48	T
203.24	COMMON BORROW	10	CY
203.25	GRANULAR BORROW	70	CY
206.082	STRUCTURAL EARTH EXCAVATION - MAJOR STRUCTURES	70	CY
304.10	AGGREGATE SUBBASE COURSE - GRAVEL	150	CY
403.208	HOT MIX ASPHALT 12.5 MM HMA SURFACE	50	T
403.209	HOT MIX ASPHALT 9.5 MM (SIDEWALKS, DRIVES, INCIDENTALS)	38	T
403.211	HOT MIX ASPHALT (SHIMMING)	20	T
403.213	HOT MIX ASPHALT 12.5 MM BASE	100	T
409.15	BITUMINOUS TACK COAT - APPLIED	40	G
461.131	TEMPORARY PAVEMENT	8	T
502.21	STRUCT. CONC., ABUTMENTS AND RETAINING WALLS	27	CY
502.261	STRUCT. CONC. ROADWAY & S/W SLAB ON CONC BRIDGE (55 CY)	1	LS
502.49	STRUCT. CONC. CURBS AND SIDEWALKS (23 CY)	1	LS
503.12	REINFORCING STEEL, FABRICATED AND DELIVERED	15,320	LB
503.13	REINFORCING STEEL, PLACING	15,320	LB
508.14	HIGH PERFORMANCE WATERPROOFING MEMBRANE (200 SY)	1	LS
511.07	COFFERDAM: UPSTREAM	1	LS
511.07	COFFERDAM: DOWNSTREAM	1	LS
514.06	CURING BOX FOR CONCRETE CYLINDERS	1	EA
515.21	PROTECTIVE COATING FOR CONCRETE SURFACES (210 SY)	1	LS
518.60	REPAIR OF VERTICAL SURFACES < 8 IN.	112	SF
518.61	REPAIR OF VERTICAL SURFACES > 8 IN.	1	CY
526.301	TEMPORARY CONCRETE BARRIER TYPE I (80 LF)	1	LS
526.323	TEXAS CLASSIC RAIL (140 LF)	1	LS
535.60	PRESTRESSED STRUCTURAL CONCRETE SLAB (91 CY)	1	LS
603.152	12 INCH TY D TRIPLE WALL PPL PIPE	74	LF
603.1791	LINER FOR 18 INCH CULVERT	100	LF
603.1971	24 INCH TY D TRIPLE WALL PPL PIPE	74	LF
604.072	CATCH BASIN TYPE AI-C	3	EA
604.153	60 INCH MANHOLE	1	EA
604.18	ADJUSTING MANHOLE OR CATCH BASIN TO GRADE	1	EA
604.242	CATCH BASIN TYPE F3	1	EA
608.08	REINFORCED CONCRETE SIDEWALK	117	SY
608.26	CURB RAMP DETECTABLE WARNING FIELD	30	SF
609.11	VERTICAL CURB TYPE I	80	LF
609.12	VERTICAL CURB TYPE I - CIRCULAR	30	LF
609.13	VERTICAL BRIDGE CURB TYPE I	96	LF
609.237	TERMINAL CURB TYPE I - 7 FOOT	2	EA
609.2371	TERMINAL CURB TYPE I - 7 FOOT - CIRCULAR	3	EA
609.38	RESET CURB TYPE I	155	LF
610.08	PLAIN RIPRAP	100	CY
615.07	LOAM	10	CY
618.13	SEEDING METHOD NUMBER 1	1	UN
619.1201	MULCH	1	UN
620.58	EROSION CONTROL GEOTEXTILE	210	SY
621.297	LG. DECID. TREE (4 INCH - 4.50 INCH CALIPER) GROUP A	3	EA
	(ACER SACCHARUM "GREEN MOUNTAIN SUGAR MAPLE")		
627.733	4" WHITE OR YELLOW PAINTED PAVEMENT MARKING LINE	600	LF
627.75	WHITE OR YELLOW PAVEMENT & CURB MARKING	200	SF
627.78	TEMP. 4 INCH PAINTED PMT MARK. LINE, WHITE OR YEL LOW	150	LF
629.05	HAND LABOR, STRAIGHT TIME	40	HR
631.12	ALL PURPOSE EXCAVATOR (INCLUDING OPERATOR)	20	HR
631.171	TRUCK - SMALL (INCLUDING OPERATOR)	20	HR
639.19	FIELD OFFICE TYPE B	1	EA
645.106	DEMOUNT REG., WARN., CONFIRM. AND RTE MARKER ASSMBLY SIGN	1	EA
645.116	REINSTALL REG., WARN., CONFIRM. AND RTE MARK. ASSMBLY SIGN	1	EA
652.31	TYPE I BARRICADE	6	EA
652.312	TYPE III BARRICADE	4	EA
652.33	DRUM	10	EA
652.34	CONE	20	EA
652.35	CONSTRUCTION SIGNS	520	SF
652.361	MAINTENANCE OF TRAFFIC CONTROL DEVICES (120 CD)	1	LS
652.38	FLAGGER	100	HR
652.41	PORTABLE CHANGABLE MESSAGE SIGN	2	EA
656.75	TEMPORARY SOIL EROSION AND WATER POLLUTION CONTROL	1	LS
659.10	MOBILIZATION	1	LS
SEWER WORK			
403.208	HOT MIX ASPHALT 12.5 MM HMA SURFACE	20	T
461.131	TEMPORARY PAVEMENT	10	T
801.011	BYPASS PUMPING SYSTEM	1	LS
822.391	GRAVITY SEWER REPLACEMENT	1	LS

GENERAL CONSTRUCTION NOTES

1. During construction, the road will be closed to traffic for a time period specified in the Special Provisions. Daily lane closures between 9AM and 4PM will be allowed on Mechanic Street. The Contractor shall maintain one 10 foot lane of alternating traffic on Mechanic Street if lane closures are in place.

2. For easements, construction limits and right of way lines, refer to Right of Way Map.

3. All utility facilities shall be adjusted by the respective utilities unless otherwise noted.

4. Do not excavate for Aggregate Subbase Course Gravel (ASCG) where existing material is suitable as determined by the Resident.

5. In areas where the Resident directs the Contractor not to excavate to the subgrade line shown on the plans, payment for removing existing pavement, grubbing, shaping, ditching, and compacting the existing subbase and layers of new subbase 6 inches or less thick will be made under appropriate equipment rental items.

6. All embankment material, except as otherwise shown, placed below EL. 28 shall be Granular Borrow meeting the requirements of Subsection 703.19, Material for Underwater Backfill.

7. Place riprap over footing up to EL. 26.0.

8. Protective Coating for Concrete Surfaces shall be applied to the following areas:

All exposed surfaces of concrete curbs and sidewalks.
Fascias down to the drip notch.
Concrete barrier railing.
Top of abutment backwalls and to one foot below the top of backwalls and wingwalls on the back side.

9. Project information referred to below may be accessed at the following MaineDOT web address: http://www.maine.gov/mdot/contractors/.

10. The existing bridge plans may be accessed at the MaineDOT web address. The plans are reproductions of the original drawings as prepared for the construction of the bridge. It is unlikely that the plans will show any construction field changes or any alterations which may have been made to the bridge during its life span.

11. The hydrologic report of the bridge site may be accessed at the MaineDOT web address. The hydrologic report is based on MaineDOT's interpretation of the information obtained for the subject site. No assurance is given that the information or the conclusions of the report will be representative of actual conditions at the time of construction.

12. The project geotechnical report titled: Geotechnical Report for the Superstructure Replacement and Abutment Rehabilitation of Bakery Bridge, State Route 105 over Megunticook River, Camden, Maine, Soils Report No. 2015-13, Dated June 22, 2015 may be accessed at the MaineDOT web address.

13. Geotechnical information furnished or referred to in this plan set is for the use of the Bidders and the Contractor. No assurance is given that the information or interpretations will be representative of actual subsurface conditions at the construction site. MaineDOT will not be responsible for the Bidders' or Contractor's interpretations of, or conclusions drawn from, the geotechnical information. The boring logs contained in the plan set present factual and interpretive subsurface information collected at discrete locations. Data provided may not be representative of the subsurface conditions between the boring locations.

14. Quantities included for pay items measured and paid for by Lump Sum are estimated quantities and are provided by MaineDOT for informational purposes only. Lump Sum pay items will be paid for at the Contract Bid amount, with no addition or reduction in payment to the Contractor if the actual final quantities are different from the MaineDOT provided estimated quantities, except as follows:

a. If a Lump Sum pay item is eliminated, the requirements of Standard Specifications Section 109.2, Elimination of Items, will take precedence.

b. If other Contract Documents specifically allow a change in payment for a Lump Sum pay item, those requirements will be followed.

c. If a design change results in changes to estimated quantities for Lump Sum pay items, price adjustments will be made in accordance with Standard Specifications Section 109.7, Equitable Adjustments to Compensation.

15. The Contractor shall submit a Bridge Demolition Plan to the Resident at least 10 business days prior to the start of demolition work. The plan shall outline the methods and equipment to be used to remove and dispose of all materials included in the existing bridge. No work related to the removal of the bridge shall be undertaken by the Contractor until MaineDOT has reviewed the Bridge Demolition Plan for appropriateness and completeness. Payment for all work necessary for developing, submitting and finalizing the Demolition Plan will be considered incidental to the bridge removal pay item.

16. Boring information and the existing plans suggest the possibility of concrete pavement in the approaches. Should the Contractor encounter existing concrete pavement in his operations, removal will be paid for under Item No. 202.12 - Remove Existing Structural Concrete.

17. The limits of rehabilitation shown on the abutment rehabilitation sheets are approximate. They are intended to convey the general size and location of areas to be patched. Final determination of rehabilitation limits, including depth, will be made in the field by the Resident.

18. A Maine Department of Environmental Protection (MDEP) data base review suggested some petroleum contamination issues adjacent to the project. However, the scope of work for this project suggests petroleum or hazardous waste should not be encountered. However, in light of the industrial nature of the area and reported spills, the contractor shall employ appropriate health and safety measures to protect its workers against hazards associated with working near petroleum-impacted soils. Furthermore, the Contractor shall remain alert for any additionally evidence of contamination. If the Contractor encounters evidence of soil or groundwater contamination, the Contractor shall secure the excavation, stop work in the contaminated area, and immediately notify the Resident. The Resident shall contact the Hydrogeologist in the Maine Department of Transportation-Office of Safety and Compliance (MaineDOT-OSC) at 207-624-3004 and the Maine Department of Environmental Protection at 800-482-0777. Work may only continue with authorization from the Resident.

19. Payment for removing and resetting existing planter will not be made directly but shall be considered incidental to related contract items.

20. Camden Place Parking Lot Sequence of Operations:

a.) Remove island and place temporary pavement between Tannery Lane and Camden Place parking lot.

b.) Stripe parking lot with Temporary Pavement Marking Line as directed by the Resident.

c.)Close entrance to Washington Street during construction.

d.) After entrance is re-opened, replace island in-kind, reusing all undamaged granite curb. Any unusable curb shall be replaced with undamaged granite curb salvaged from Washington Street curb work.

e.) Install conduit supplied by others in center of island as directed by the Resident.

f.) Overlay parking lot in accordance with Special Provision Section 403 and stripe to match existing.

21. Excavating and backfilling conduit trench will be paid for as Common Excavation and Common Borrrow.

22. The Contractor shall not store equipment, vehicles, or materials in the Camden Place parking lot.

23. Minimal clearing is anticipated. Clearing limits will be established in the field by the Resident. Payment for clearing is incidental to related Contract items.

24. Payment for Reconstruct Concrete Sidewalk will be made under Item 608.08.

STATE OF MAINE
DEPARTMENT OF TRANSPORTATION

STP-2049(100)

WIN 20491.00

BRIDGE NO. 2981

BRIDGE PLANS

		BY	DATE	SIGNATURE
PROJ. MANAGER	JCK			
DESIGN-DETAILED	JRS	BJN	JAN 2016	
CHECKED-REVIEWED	CLD	CLD	SEPT 2014	
DESIGN2-DETAILED2	K.MAGUIRE	T.WHITE		P.E. NUMBER
DESIGN3-DETAILED3				
REVISIONS 1				DATE
REVISIONS 2				
REVISIONS 3				
REVISIONS 4				
FIELD CHANGES				

BAKERY BRIDGE
MEGUNTICOOK RIVER
CAMDEN KNOX COUNTY

ESTIMATED QUANTITIES

SHEET NUMBER
2
OF 26

Filename: ...\BRIDGE\MSTA\002_Estimate.dgn Division: BRIDGE Username: Joseph.r.Stilwell Date:2/2/2016

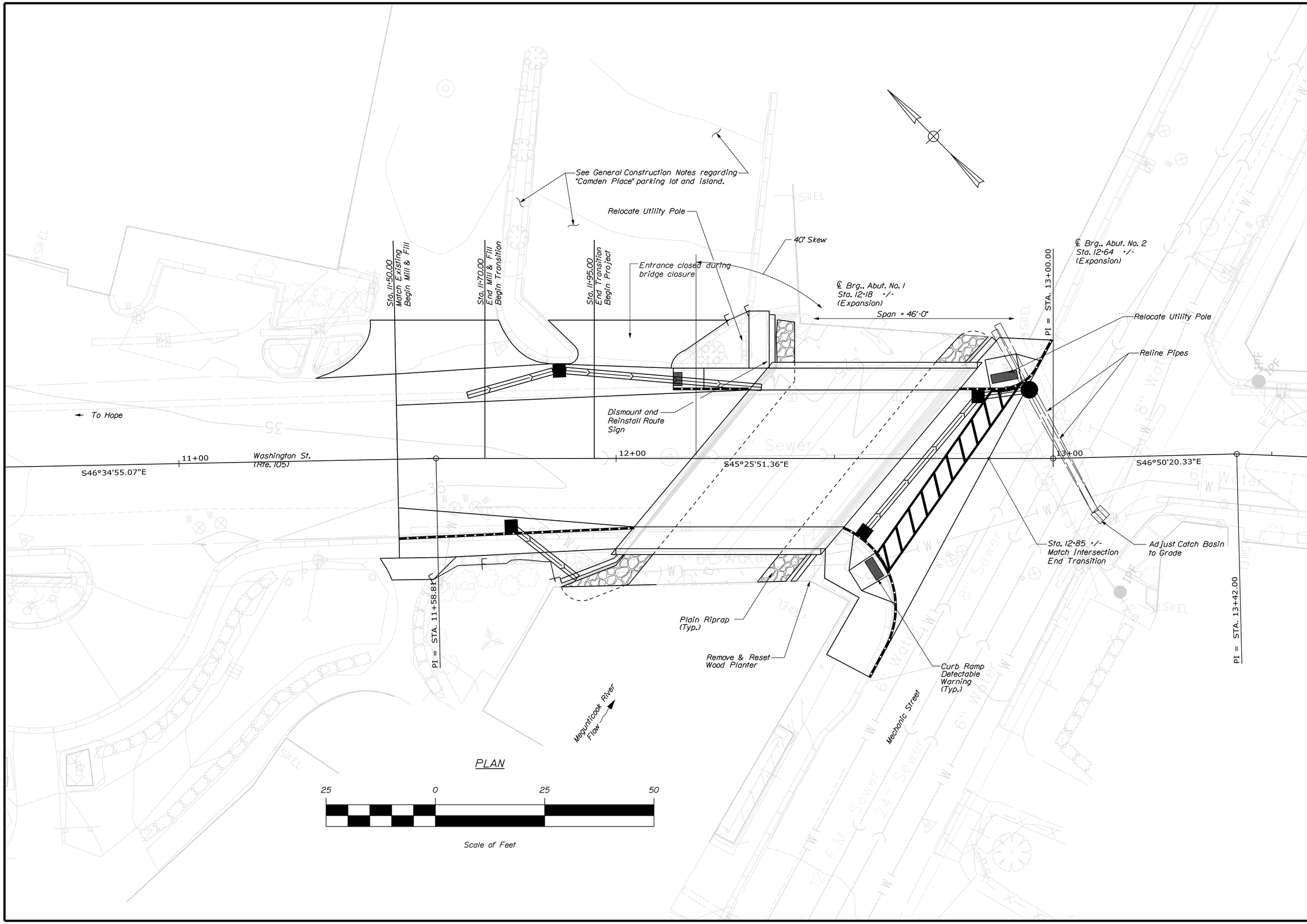

STATE OF MAINE
DEPARTMENT OF TRANSPORTATION

STP-2049(100)

WIN 20491.00

BRIDGE NO. 2981

BRIDGE PLANS

		BY	DATE
PROJ. MANAGER	JCK		
DESIGN-DETAILED	JRS	BJN	JAN 2016
CHECKED-REVIEWED	CLD	CLD	
DESIGN2-DETAILED2	K.MAGUIRE	T.WHITE	SEPT 2014
DESIGN3-DETAILED3	------	------	------
REVISIONS 1	------	------	------
REVISIONS 2	------	------	------
REVISIONS 3	------	------	------
REVISIONS 4	------	------	------
FIELD CHANGES	------	------	------

SIGNATURE

P.E. NUMBER

DATE

BAKERY BRIDGE
MEGUNTICOOK RIVER
CAMDEN KNOX COUNTY

GENERAL PLAN

SHEET NUMBER

3

OF 26

Filename: ...\00\BRIDGE\MSTA\003_BDPlan1.dgn Division: BRIDGE Username: Brian.J.Nichols Date:1/25/2016

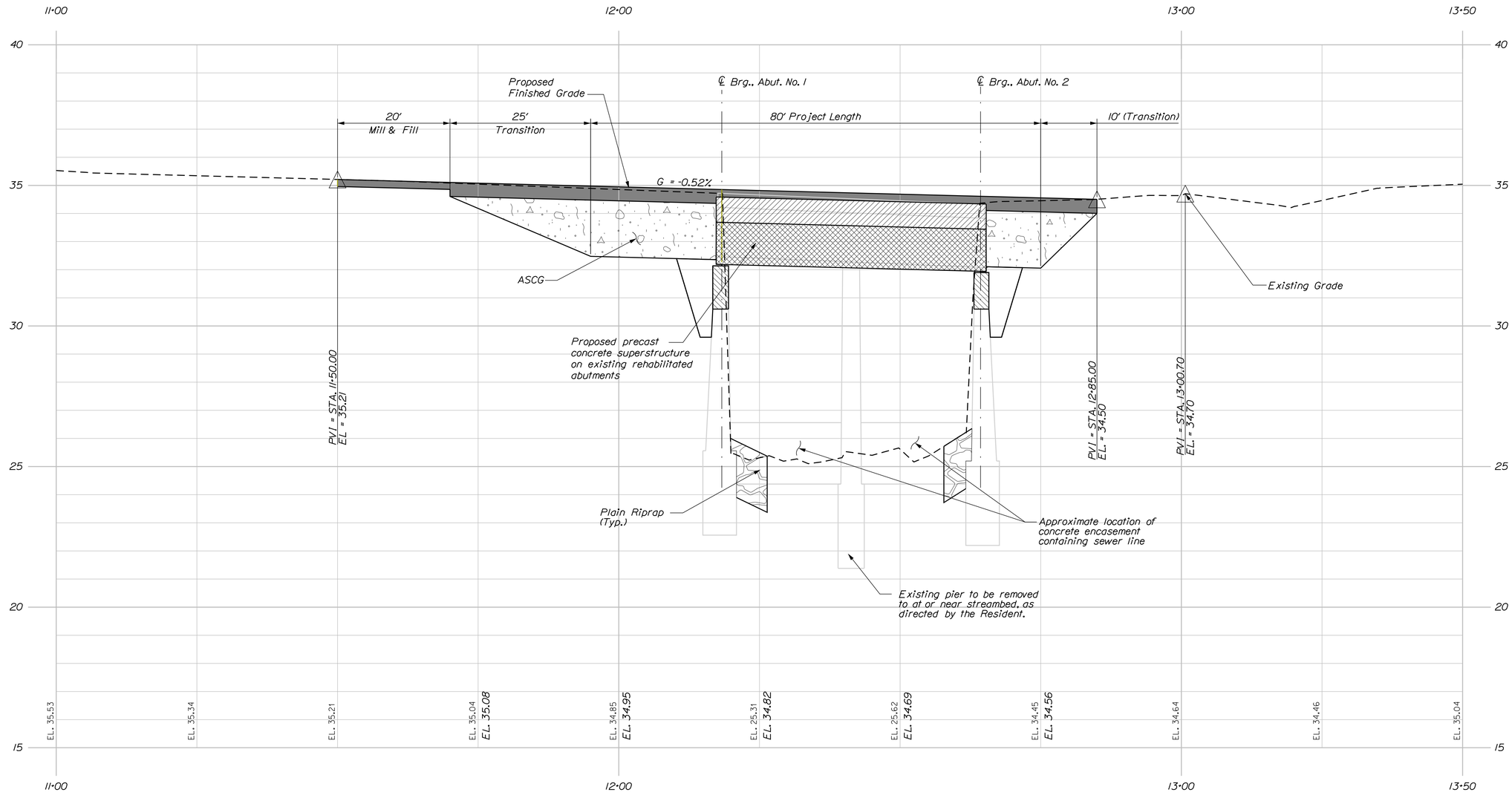

PROFILE

Horiz. 25 0 25 50

Vert. 5 0 5 10

Scale of Feet

STATE OF MAINE
DEPARTMENT OF TRANSPORTATION

STP-2049(100)

WIN 20491.00

BRIDGE NO. 2981

BRIDGE PLANS

PROJ. MANAGER	JCK	BY	DATE
DESIGN-DETAILED	JRS	BJN	
CHECKED-REVIEWED	CLD	CLD	JAN 2016
DESIGN2-DETAILED2	K.MAGUIRE	T.WHITE	SEPT 2014
DESIGN3-DETAILED3	------	------	------
REVISIONS: 1	------	------	------
REVISIONS: 2	------	------	------
REVISIONS: 3	------	------	------
REVISIONS: 4	------	------	------
FIELD CHANGES	------	------	------

SIGNATURE

P.E. NUMBER

DATE

BAKERY BRIDGE
MEGUNTICOOK RIVER
CAMDEN KNOX COUNTY

GENERAL PLAN

SHEET NUMBER

4

OF 26

Filename: ...\00\BRIDGE\MSTA\004_Profile.dgn Division: BRIDGE Username: Brian.J.Nichols Date:1/25/2016

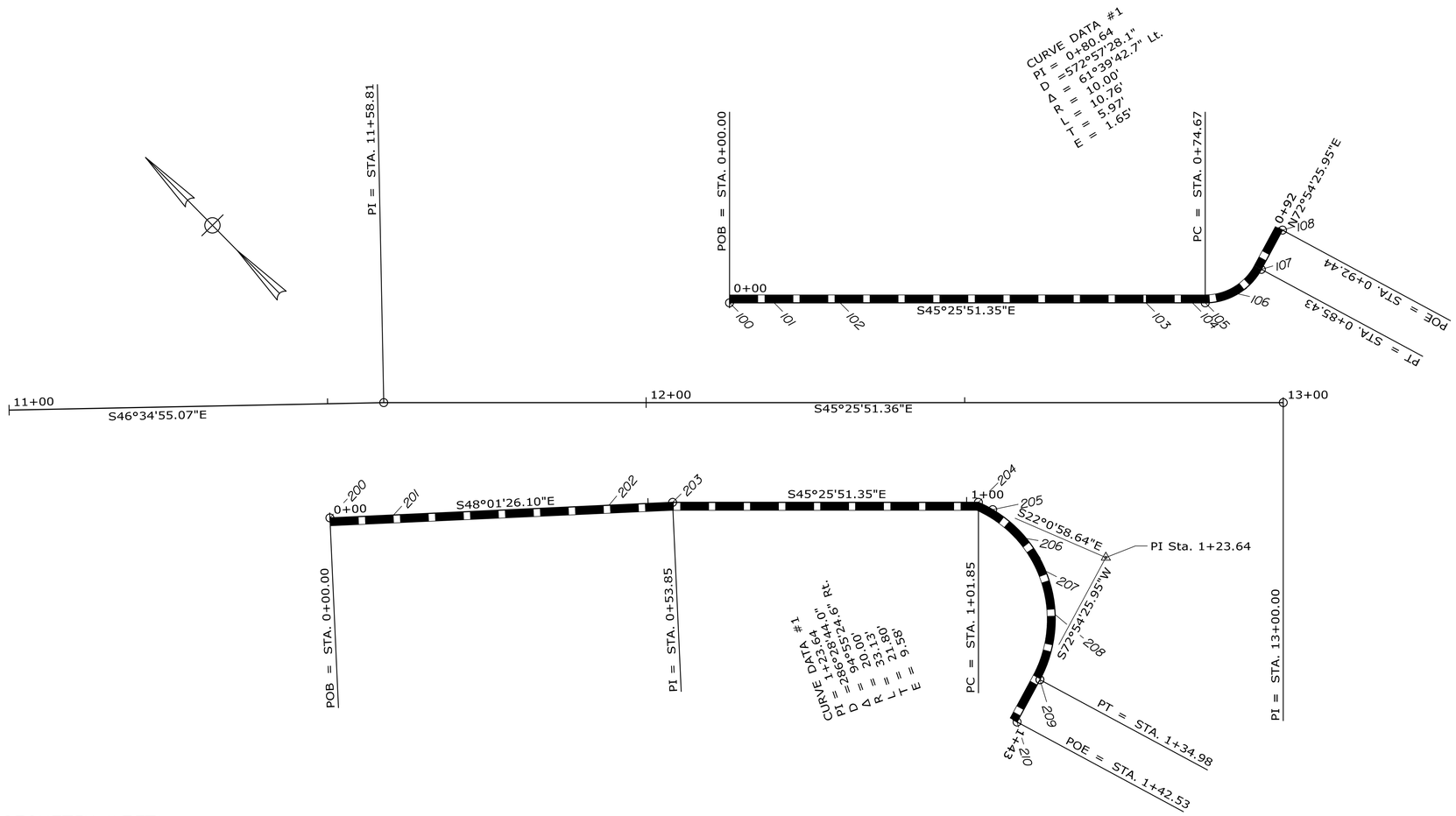

CURB LAYOUT GEOMETRY (LEFT)

Point	Station	Offset (Lt.)	Reveal (in)	Northing	Easting	Curb Description
100	12+13.09	15.67	Match	258897.33	1655695.01	Terminal Curb Type 1 - 7 Foot
101	12+20.09	15.67	7	258892.42	1655700.00	Vertical Curb Type 1
102	12+30.45	15.67	9	258885.15	1655707.38	Vertical Bridge Curb Type 1
103	12+78.45	15.67	9	258851.46	1655741.58	Terminal Curb Type 1 - 7 Foot
104	12+85.74	15.67	0	258846.34	1655746.77	Vertical Curb Type 1
105	12+87.76	15.67	0	258844.93	1655748.21	Vertical Curb Type 1 Circular
106	12+92.88	17.08	0	258841.33	1655751.86	Terminal Curb Type 1 - 7 Foot Circular
107	12+96.56	20.92	7	258838.75	1655754.48	Vertical Curb Type 1
108	13+00.55	27.08	Match	258835.96	1655757.33	

CURB LAYOUT GEOMETRY (RIGHT)

Point	Station	Offset (Rt.)	Reveal (in)	Northing	Easting	Curb Description
200	11+50.00	17.93	Match	258941.48	1655649.95	Vertical Curb Type 1
201	11+60.35	17.65	7	258934.34	1655657.44	Vertical Curb Type 1
202	11+94.16	16.12	7	258910.61	1655681.53	Vertical Curb Type 1
203	12+04.15	15.67	9	258903.60	1655688.65	Vertical Bridge Curb Type 1
204	12+52.15	15.67	9	258869.91	1655722.85	Vertical Curb Type 1 Circular
205	12+54.39	16.81	7	258868.34	1655724.44	Terminal Curb Type 1 - 7 Foot Circular
206	12+59.68	21.34	0	258864.64	1655728.20	Vertical Curb Type 1 Circular
207	12+62.73	26.48	0	258862.49	1655730.38	Terminal Curb Type 1 - 7 Foot Circular
208	12+64.19	33.29	7	258861.47	1655731.42	Vertical Curb Type 1 Circular
209	12+61.81	43.51	7	258863.14	1655729.72	Vertical Curb Type 1
210	12+58.22	50.16	Match	258865.65	1655727.17	

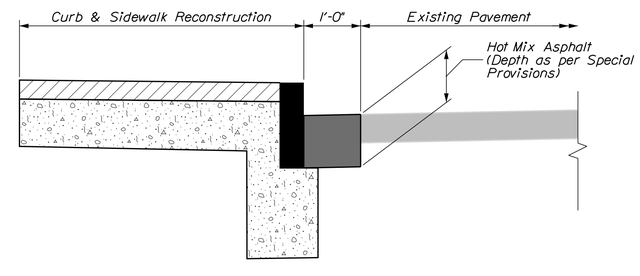

MECHANIC STREET CURB DETAIL

STATE OF MAINE
DEPARTMENT OF TRANSPORTATION

STP-2049(100)

WIN 20491.00

BRIDGE NO. 2981

BRIDGE PLANS

PROJ. MANAGER	JCK	BY	DATE
DESIGN-DETAILED	JRS	BJN	
CHECKED-REVIEWED	CLD	CLD	JAN 2016
DESIGN2-DETAILED2	K.MAGUIRE	T.WHITE	SEPT 2014
DESIGN3-DETAILED3			
REVISIONS 1			
REVISIONS 2			
REVISIONS 3			
REVISIONS 4			
FIELD CHANGES			

SIGNATURE

P.E. NUMBER

DATE

BAKERY BRIDGE
MEGUNTICOOK RIVER
CAMDEN KNOX COUNTY

CURB GEOMETRY

SHEET NUMBER
5
OF 26

Filename: ...\MSTA\005_Curb Geometry.dgn Division: BRIDGE Username: Brian.J.Nichols Date:1/21/2016

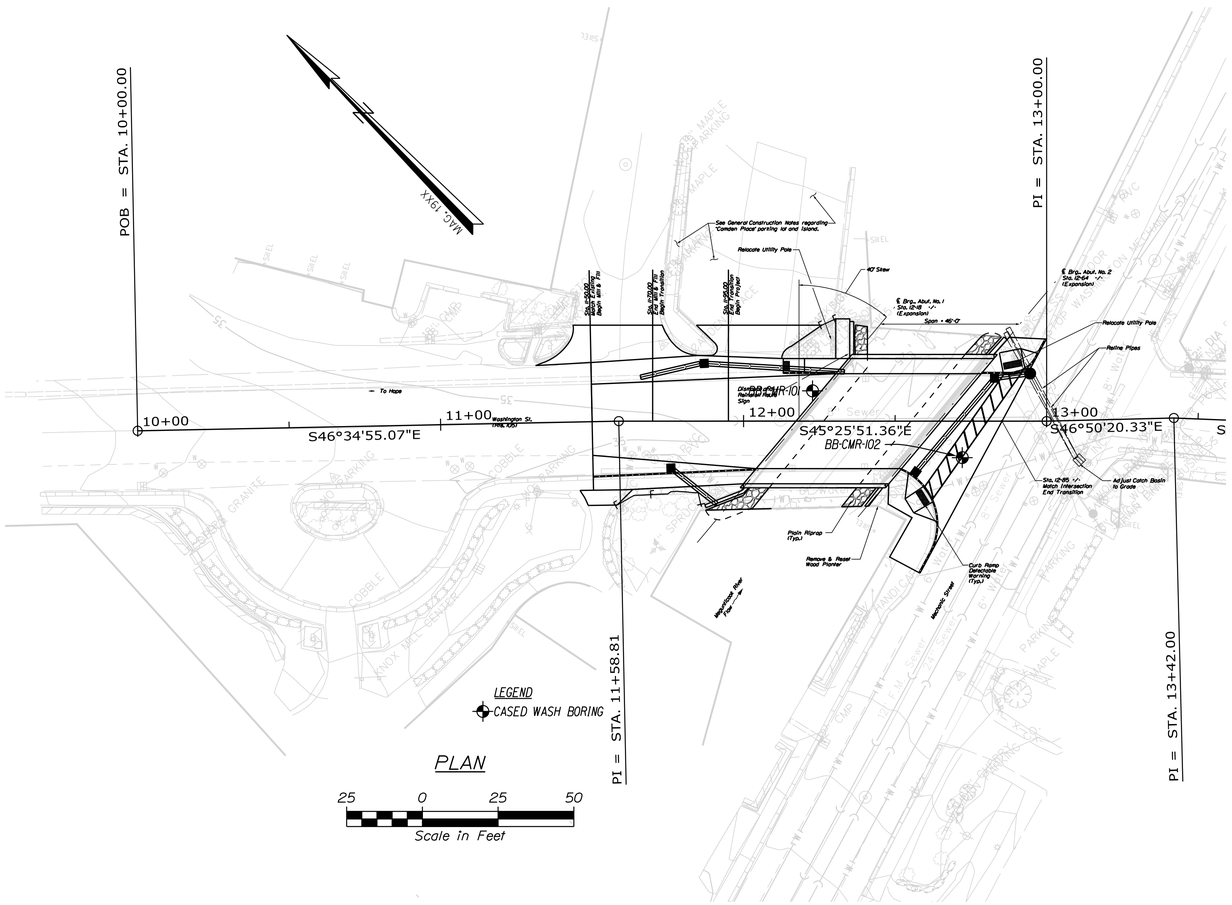

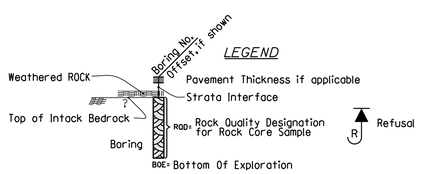

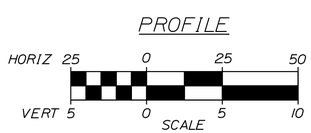

Note: This generalized interpretive soil profile is intended to convey trends in subsurface conditions. The boundaries between strata are approximate and idealized, and have been developed by interpretations of widely spaced explorations and samples. Actual soil transitions may vary and are probably more erratic. For more specific information refer to the exploration logs.

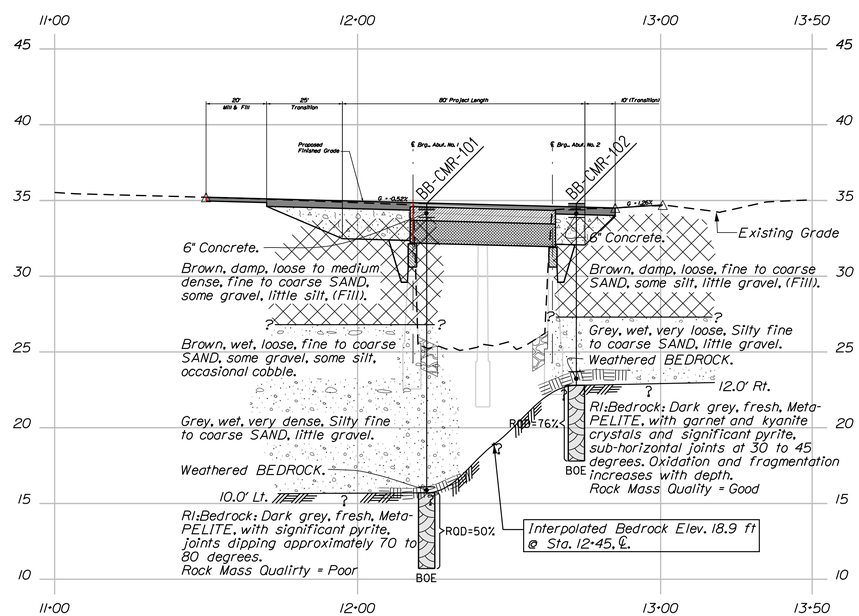

Maine Department of Transportation
Soil/Rock Exploration Log
US CUSTOMARY UNITS

Project: Bakery Bridge #2981 carries Route 105 over Megunticook River
Location: Camden, Maine

Boring No.: BB-CMR-101
WIN: 20491.00

Driller:	Maine DOT	Elevation (ft.) 34.8	Auger ID/OD: 5" Solid Stem
Operator:	Giles/Giles	Datum: NAVD88	Sampler: Standard Split Spoon
Logged By:	B. Wilder	Rig Type: CME 45C	Hammer Wt./Fall: 140#/30"
Date Start/Finish:	9/23/2014; 08:00-11:30	Drilling Methods: Cased Wash Boring	Core Barrel: NQ-2*
Boring Location:	12+22.8, 10.0 ft Lt.	Casing ID/OD: NW	Water Level*: None Observed
Hammer Efficiency Factor: 0.908		Hammer Type: Automatic ☒ Hydraulic ☐ Rope & Cathead ☐	

Definitions:
D = Split Spoon Sample
MD = Unsuccessful Split Spoon Sample attempt
U = Thin Wall Tube Sample
MU = Unsuccessful Thin Wall Tube Sample attempt
V = Insitu Vane Shear Test, PP = Pocket Penetrometer
MV = Unsuccessful Insitu Vane Shear Test attempt
R = Rock Core Sample
SSA = Solid Stem Auger
HSA = Hollow Stem Auger
RC = Roller Cone
WOH = weight of 140lb. hammer
WOR/C = weight of rods or casing
WO1P = Weight of one person
S_u = Insitu Field Vane Shear Strength (psf)
T_v = Pocket Torvane Shear Strength (psf)
q_p = Unconfined Compressive Strength (ksf)
N-uncorrected = Raw Field SPT N-value
Hammer Efficiency Factor = Annual Calibration Value
N_{60} = SPT N-uncorrected corrected for hammer efficiency
N_{60} = (Hammer Efficiency Factor/60%)*N-uncorrected
$S_{u(lab)}$ = Lab Vane Shear Strength (psf)
WC = water content, percent
LL = Liquid Limit
PL = Plastic Limit
PI = Plasticity Index
G = Grain Size Analysis
C = Consolidation Test

Depth (ft.)	Sample No.	Pen./Rec. (in.)	Sample Depth (ft.)	Blows (/6 in.) Shear Strength (psf) or RQD (%)	N-uncorrected	N_{60}	Casing Blows	Elevation (ft.)	Visual Description and Remarks	Laboratory Testing Results/ AASHTO and Unified Class.
0							SSA	34.38	5" Pavement	
								33.88	6" Concrete (0.42) (0.92)	
	1D	24/8	2.00 - 4.00	2/2/4/3	6	9			Brown, damp, loose, fine to coarse SAND, some gravel, little silt (Fill).	
5	2D	24/17	5.00 - 7.00	5/5/7/6	12	18			Similar to above, except medium dense.	
								26.80	(8.00)	
10	3D	24/13	10.00 - 12.00	2/2/4/6	6	9	5		Brown, wet, loose, fine to coarse SAND, some gravel, some silt, occasional cobble.	
							9			
							24			
							42			
15	4D	24/10	14.00 - 16.00	23/26/10/7	36	54	26		Grey, wet, very dense, Silty, fine to coarse SAND, little gravel.	
							29			
							31			
							100			
							250	16.10	(18.70)	
	MD/R1	60/60	19.10 - 24.10	RQD = 50%			950 NQ-2	15.70	Weathered BEDROCK. 100 blows for 0.1 ft. (19.10) Failed sample attempt. Top of intact Bedrock at Elev. 15.7 ft. R1:Bedrock: Dark grey, fresh, Meta-PELITE, with significant pyrite, joints dipping approximately 70 to 80 degrees. Rock Mass Quality = Poor R1:Core Times (min:sec) 19.1-20.1 ft (3:07); 20.1-21.1 ft (4:28); 21.1-22.1 ft (5:39); 22.1-23.1 ft (4:45); 23.1-24.1 ft (5:25) 100% Recovery	
20								10.70	Bottom of Exploration at 24.10 feet below ground surface. (24.10)	
25										

Remarks:
Left 5.0 ft of casing in borehole.
300-400# down pressure on Core Barrel.

Stratification lines represent approximate boundaries between soil types; transitions may be gradual.
* Water level readings have been made at times and under conditions stated. Groundwater fluctuations may occur due to conditions other than those present at the time measurements were made.

Page 1 of 1
Boring No.: BB-CMR-101

Maine Department of Transportation
Soil/Rock Exploration Log
US CUSTOMARY UNITS

Project: Bakery Bridge #2981 carries Route 105 over Megunticook River
Location: Camden, Maine

Boring No.: BB-CMR-102
WIN: 20491.00

Driller:	Maine DOT	Elevation (ft.) 34.8	Auger ID/OD: 5" Solid Stem
Operator:	Giles/Giles	Datum: NAVD88	Sampler: Standard Split Spoon
Logged By:	B. Wilder	Rig Type: CME 45C	Hammer Wt./Fall: 140#/30"
Date Start/Finish:	9/23/2014; 11:30-15:00	Drilling Methods: Cased Wash Boring	Core Barrel: NQ-2*
Boring Location:	12+72.2, 12.0 ft Rt.	Casing ID/OD: NW	Water Level*: None Observed
Hammer Efficiency Factor: 0.908		Hammer Type: Automatic ☒ Hydraulic ☐ Rope & Cathead ☐	

Definitions:
D = Split Spoon Sample
MD = Unsuccessful Split Spoon Sample attempt
U = Thin Wall Tube Sample
MU = Unsuccessful Thin Wall Tube Sample attempt
V = Insitu Vane Shear Test, PP = Pocket Penetrometer
MV = Unsuccessful Insitu Vane Shear Test attempt
R = Rock Core Sample
SSA = Solid Stem Auger
HSA = Hollow Stem Auger
RC = Roller Cone
WOH = weight of 140lb. hammer
WOR/C = weight of rods or casing
WO1P = Weight of one person
S_u = Insitu Field Vane Shear Strength (psf)
T_v = Pocket Torvane Shear Strength (psf)
q_p = Unconfined Compressive Strength (ksf)
N-uncorrected = Raw Field SPT N-value
Hammer Efficiency Factor = Annual Calibration Value
N_{60} = SPT N-uncorrected corrected for hammer efficiency
N_{60} = (Hammer Efficiency Factor/60%)*N-uncorrected
$S_{u(lab)}$ = Lab Vane Shear Strength (psf)
WC = water content, percent
LL = Liquid Limit
PL = Plastic Limit
PI = Plasticity Index
G = Grain Size Analysis
C = Consolidation Test

Depth (ft.)	Sample No.	Pen./Rec. (in.)	Sample Depth (ft.)	Blows (/6 in.) Shear Strength (psf) or RQD (%)	N-uncorrected	N_{60}	Casing Blows	Elevation (ft.)	Visual Description and Remarks	Laboratory Testing Results/ AASHTO and Unified Class.
0							SSA	34.38	5" Pavement	
								33.88	6" Concrete (0.42) (0.92)	
	1D	24/18	5.00 - 7.00	2/2/3/4	5	8			Brown, damp, loose, fine to coarse SAND, some silt, little gravel, (Fill).	
5								27.30	Roller Coned ahead from 7.5-10.5 ft bgs. (7.50)	
10	2D	7.2/4	10.50 - 11.10	5/40(1.2")	---		100		100 blows for 0.5 ft. Grey, wet, very dense, Silty fine to coarse SAND, little gravel.	
								23.70	(11.10)	
								22.80	Roller Coned ahead from 11.1-12.0 ft bgs. Weathered BEDROCK. (12.00)	
	R1	60/46	12.00 - 17.00	RQD = 76%			NQ-2		Top of Intact Bedrock at Elev. 22.8 ft. R1:Bedrock: Dark grey, fresh, Meta-PELITE, with garnet and kyanite crystals, and significant pyrite, sub-horizontal joints at 30 to 45 degrees. Oxidation and fragmentation increase with depth. Rock Mass Quality = Good. R1:Core Times (min:sec) 12.0-13.0 ft (3:07); 13.0-14.0 ft (4:30); 14.0-15.0 ft (4:40); 15.0-16.0 ft (5:20); 16.0-17.0 ft (5:20) 76% Recovery	
15								17.80		
									Bottom of Exploration at 17.00 feet below ground surface. (17.00)	
20										
25										

Remarks:
Left 14" of Cone in borehole, core barrel lift brake drilling through bent shoe, core barrel brake.

Stratification lines represent approximate boundaries between soil types; transitions may be gradual.
* Water level readings have been made at times and under conditions stated. Groundwater fluctuations may occur due to conditions other than those present at the time measurements were made.

Page 1 of 1
Boring No.: BB-CMR-102

STATE OF MAINE
DEPARTMENT OF TRANSPORTATION

STP-2049(100)

WIN 20491.00

BRIDGE NO. 2981

BRIDGE PLANS

	BY	DATE
PROJ. MANAGER		
DESIGN-DETAILED		
CHECKED-REVIEWED		
DESIGN2-DETAILED2	K.MAGUIRE	
DESIGN3-DETAILED3		
REVISIONS 1		
REVISIONS 2		
REVISIONS 3		
REVISIONS 4		
FIELD CHANGES		

SIGNATURE
T.WHITE
P.E. NUMBER MAR 2015
DATE

BAKERY BRIDGE
MEGUNTICOOK RIVER
CAMDEN KNOX COUNTY

BORING LOCATION PLAN &
INTERPRETIVE SUBSURFACE PROFILE
WITH BORING LOGS

SHEET NUMBER
6
OF 26

Filename: ...\MSTA\006_BLP&ISP_BL1.dgn Division: BRIDGE Username: Brian.J.Nichols Date:1/20/2016

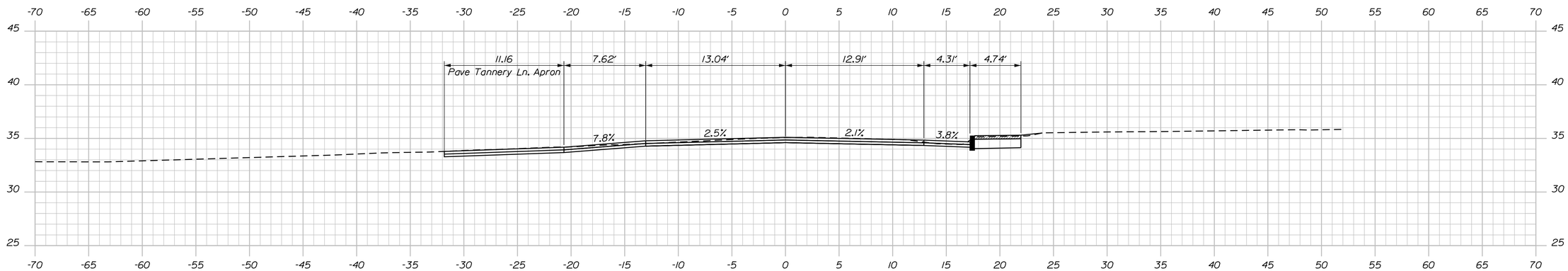

11+70.00
End Mill & Fill
Begin Transition

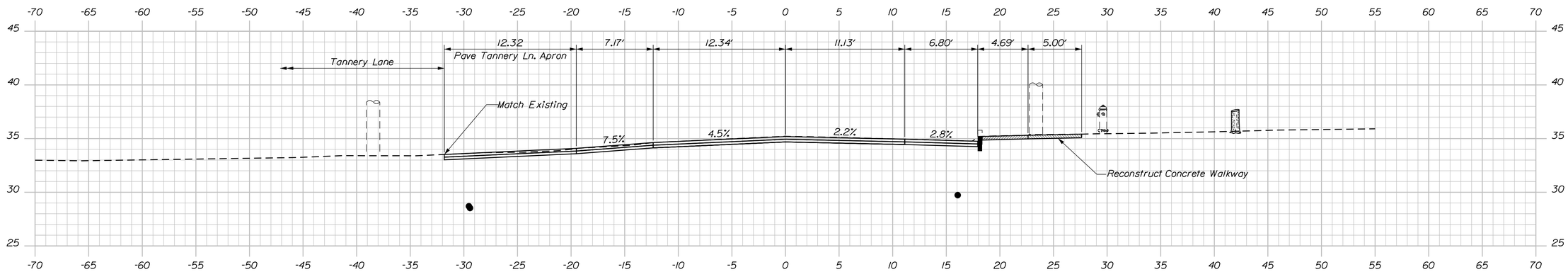

Sta. 11+66 15' LT
to Sta. 11+87, 19' LT
Install 20 LF 24" Polypropylene Pipe
Match into existing stormwater pipe

11+50.00
Match Existing
Begin Mill & Fill

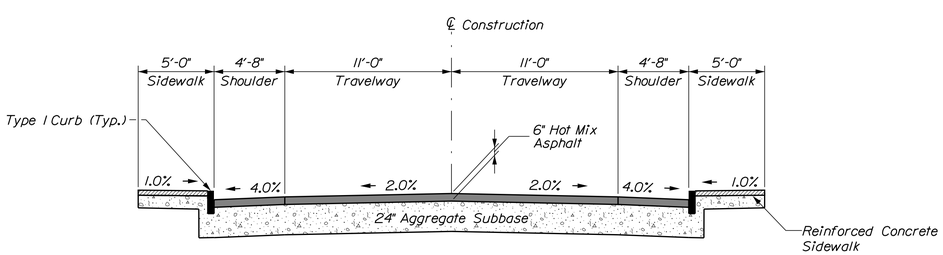

TYPICAL APPROACH SECTION

TYPICAL SECTION NOTES

1. The pavement, base and subbase depths shown are intended to be nominal.

2. Crowns for all courses of subbase and pavement shall be straight.

3. Before the bridge, shoulder slope break locations shall transition from the Edge of Travelway at the beginning match point to the curb line at the bridge.

4. After the bridge, roadway cross-slope shall be consistent across the section with no shoulder slope break.

STATE OF MAINE
DEPARTMENT OF TRANSPORTATION

STP-2049(100)

PIN 20491.00

BRIDGE NO. 2981

BRIDGE PLANS

PROJ. MANAGER	JCK	BY	DATE
DESIGN-DETAILED	JRS	BJN	JAN 2016
CHECKED-REVIEWED	CLD	CLD	SEPT 2014
DESIGN2-DETAILED2	K.MAGUIRE	T.WHITE	------
DESIGN3-DETAILED3	------	------	------
REVISIONS 1	------	------	------
REVISIONS 2	------	------	------
REVISIONS 3	------	------	------
REVISIONS 4	------	------	------
FIELD CHANGES	------	------	------

SIGNATURE

P.E. NUMBER

DATE

BAKERY BRIDGE
MEGUNTICOOK RIVER
CAMDEN KNOX COUNTY

CROSS SECTIONS

SHEET NUMBER
7
OF 26

Filename: ...\MSTA\007_XSECT_11+50_001.dgn Division: BRIDGE Username: Brian.J.Nichols Date:1/22/2016

Sta. 11+50.00 to Sta. 11+70.00

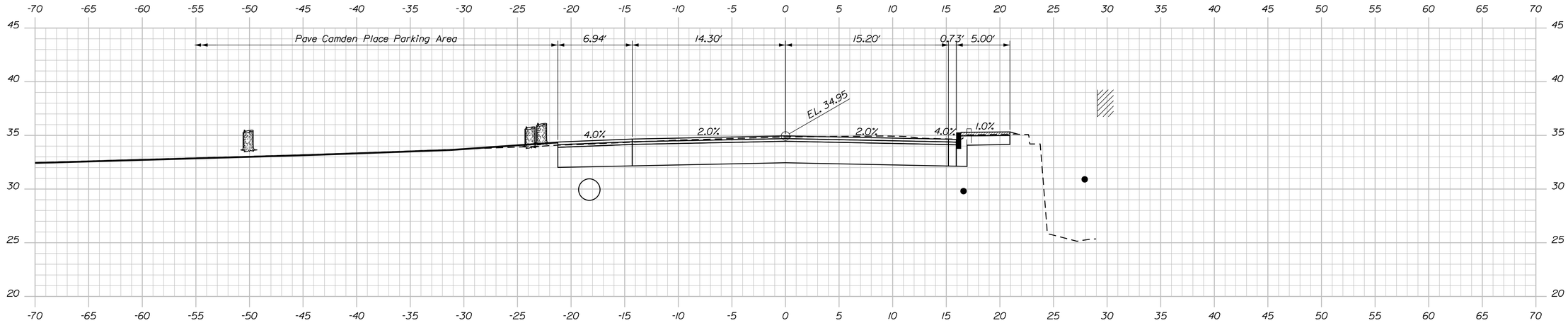

12+00.00

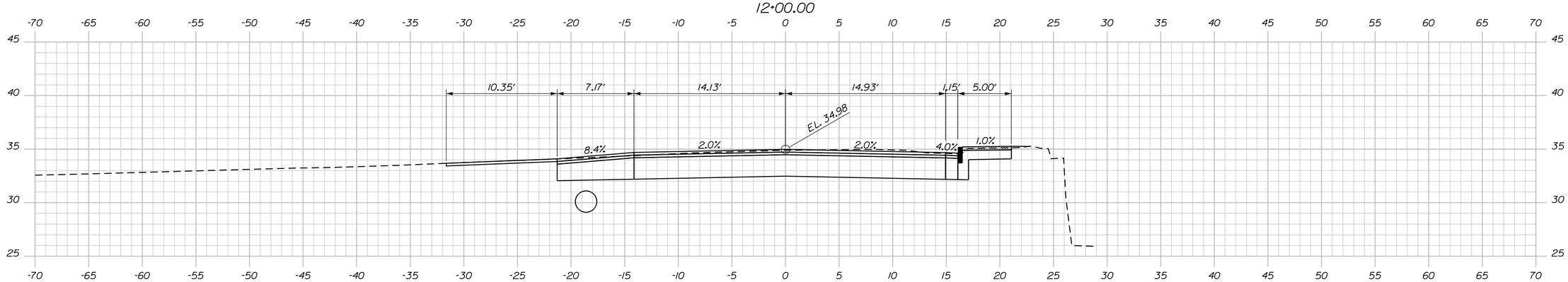

11+95.00
End Transition
Begin Project

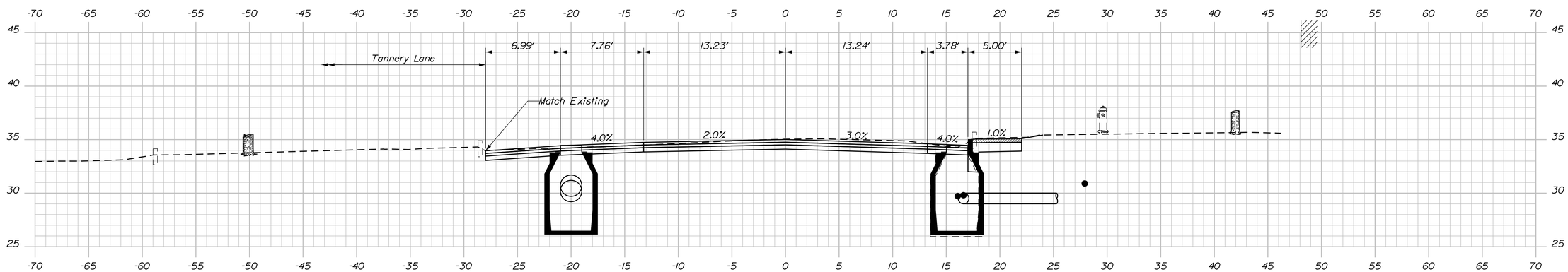

Sta. 11+87, 20' LT
Install Catch Basin Type AIC
Inlet EL. 30.2
Outlet EL. 29.7
Grate EL. 34.22

Sta. 11+87 19' LT
to Sta. 12+32, 16.3' LT
Install 48 LF 24" Polypropylene Pipe
(Outlet through existing hole in abut.)

11+75.00

Sta. 11+75.95, 16' RT
Install Catch Basin Type AIC
Inlet EL. 30.5 +/- (Match Existing 18" Pipe)
Outlet EL. 30.0
Grate EL. 34.62

Sta. 11+76, 16' RT
to Sta. 11+93, 28' RT
Install 22 LF 12" Polypropylene Pipe
(Outlet through existing hole in wingwall)

STATE OF MAINE
DEPARTMENT OF TRANSPORTATION

STP-2049(100)

PIN
20491.00

BRIDGE NO. 2981

BRIDGE PLANS

		BY	DATE
PROJ. MANAGER	JCK		
DESIGN-DETAILED	JRS	BJN	JAN 2016
CHECKED-REVIEWED	CLD	CLD	
DESIGN2-DETAILED2	K.MAGUIRE	T.WHITE	SEPT 2014
DESIGN3-DETAILED3	------	------	------
REVISIONS 1	------	------	------
REVISIONS 2	------	------	------
REVISIONS 3	------	------	------
REVISIONS 4	------	------	------
FIELD CHANGES	------	------	------

SIGNATURE

P.E. NUMBER

DATE

BAKERY BRIDGE
MEGUNTICOOK RIVER
CAMDEN KNOX COUNTY

CROSS SECTIONS

SHEET NUMBER
8
OF 26

Sta. 11+75.00 to Sta. 12+00.00

Filename: ...\MSTA\008_XSECT_11+75_002.dgn Division: BRIDGE Username: Brian.J.Nichols Date:1/25/2016

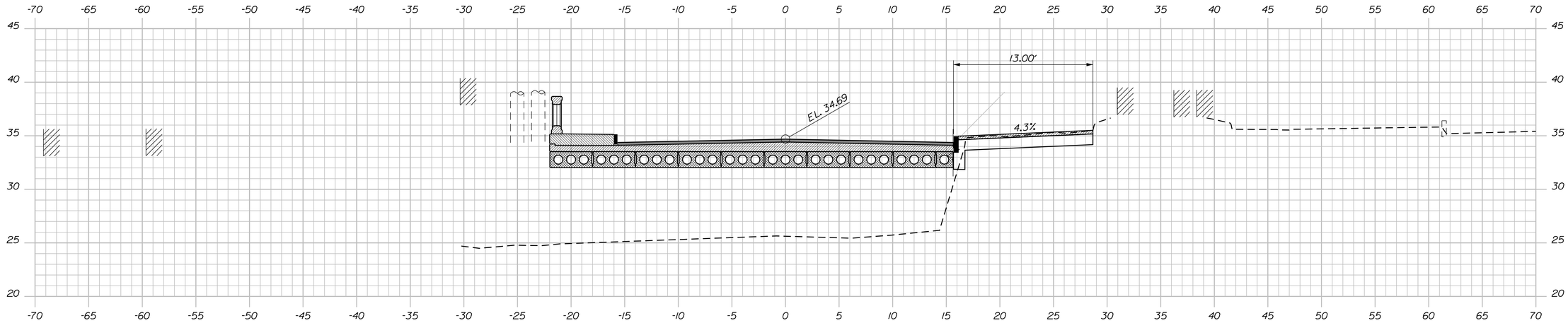

12+50.00

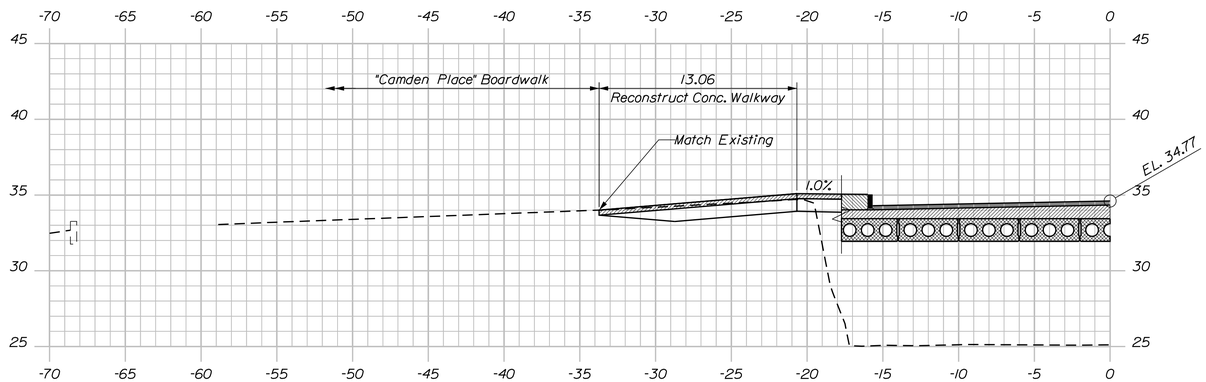

12+34.00

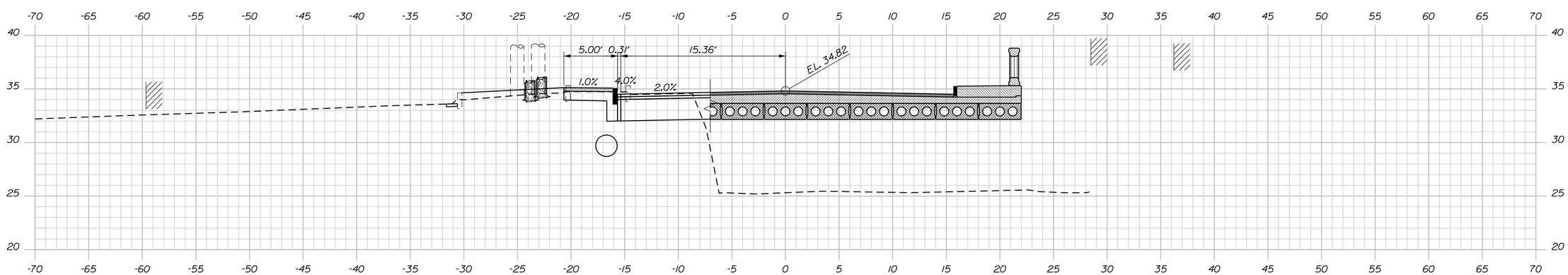

12+25.00

STATE OF MAINE
DEPARTMENT OF TRANSPORTATION

STP-2049(100)

PIN 20491.00

BRIDGE NO. 2981

BRIDGE PLANS

PROJ. MANAGER	JCK		BY	DATE
DESIGN-DETAILED	JRS	BJN		
CHECKED-REVIEWED	CLD	CLD		JAN 2016
DESIGN2-DETAILED2	K.MAGUIRE	T.WHITE		SEPT 2014
DESIGN3-DETAILED3	------	------		------
REVISIONS 1	------	------		------
REVISIONS 2	------	------		------
REVISIONS 3	------	------		------
REVISIONS 4	------	------		------
FIELD CHANGES	------	------		------

SIGNATURE

P.E. NUMBER

DATE

BAKERY BRIDGE
MEGUNTICOOK RIVER
CAMDEN KNOX COUNTY

CROSS SECTIONS

SHEET NUMBER

9

OF 26

Filename: ...\MSTA\009_XSECT_12+25_003.dgn Division: BRIDGE Username: Brian.J.Nichols Date:1/20/2016

Sta. 12+25.00 to Sta. 12+50.00

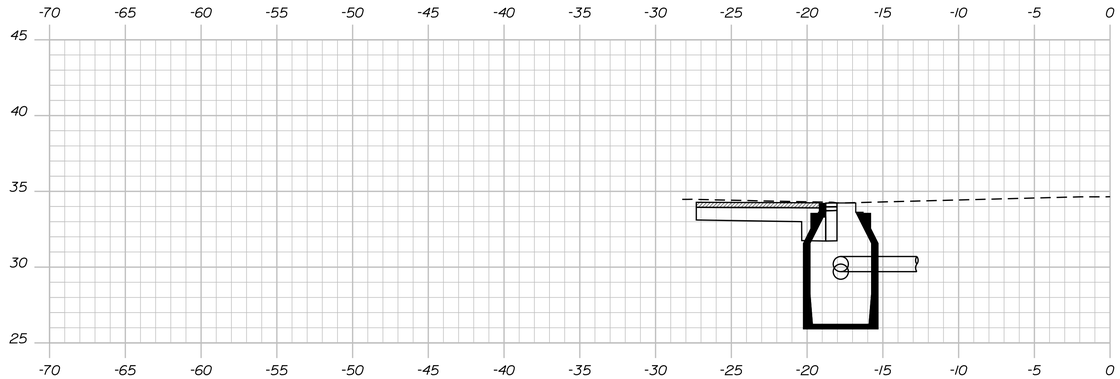

Sta. 12+98 16.3' LT
Install Manhole
Inlet EL. 29.7
Match additional inlet & outlet
elevations of existing pipes to be relined.
(Field varify existing pipe diameters and locations)

12+95.00

Sta. 13+09.98 12.6' RT
Adjust Catch Basin to Grade

Sta. 12+83 14.2 ' LT to Sta. 12+98 16.3' LT
Install 12 LF 12" Polypropylene Pipe

Sta. 12+83 14.2' LT
Install Catch Basin Type AIC
Outlet EL. 29.9
Inlet EL. 30.4
Grate EL. 34.15

12+85.00
Match Into
Mechanic St. Intersection

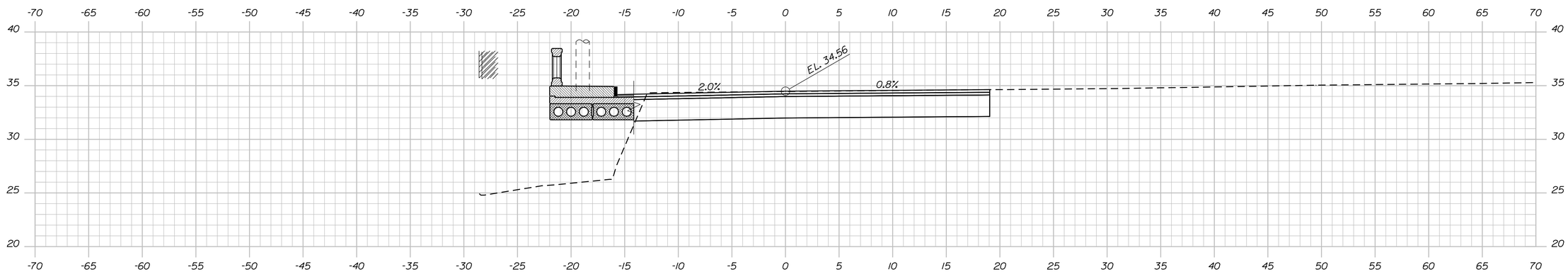

12+75.00

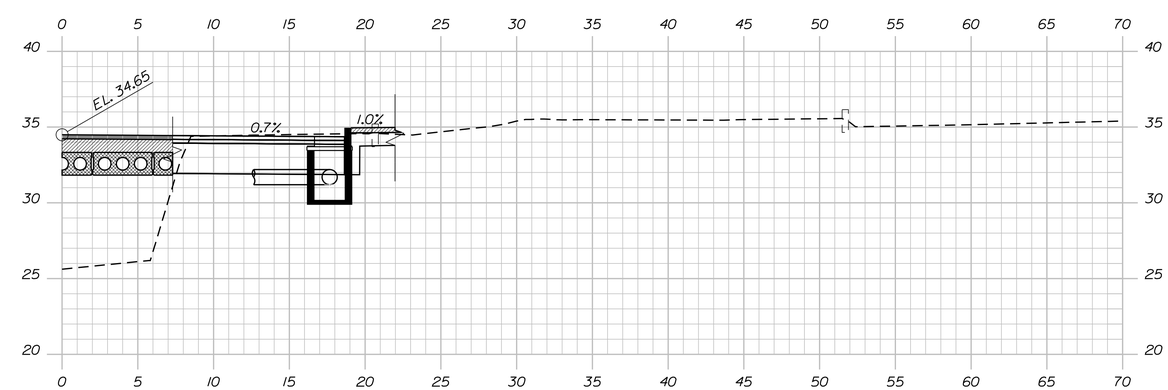

12+57.00

Sta. 12+57. 16.8' RT
Install Catch Basin Type F
Outlet EL. 31.2
Grate EL. 34.24

Sta. 12+57. 16.8' RT to Sta. 12+83 14.2 ' LT
Install 40 LF 12" Polypropylene Pipe

1/20/2016

STATE OF MAINE
DEPARTMENT OF TRANSPORTATION

STP-2049(100)

PIN
20491.00

BRIDGE NO. 2981

BRIDGE PLANS

PROJ. MANAGER	JCK	BY	DATE
DESIGN-DETAILED	JRS	BJN	JAN 2016
CHECKED-REVIEWED	CLD	CLD	SEPT 2014
DESIGN2-DETAILED2	K.MAGUIRE	T.WHITE	
DESIGN3-DETAILED3			
REVISIONS 1			
REVISIONS 2			
REVISIONS 3			
REVISIONS 4			
FIELD CHANGES			

SIGNATURE

P.E. NUMBER

DATE

BAKERY BRIDGE
MEGUNTICOOK RIVER
CAMDEN KNOX COUNTY

CROSS SECTIONS

SHEET NUMBER
10
OF 26

Sta. 12+57.00 to Sta. 12+95.00

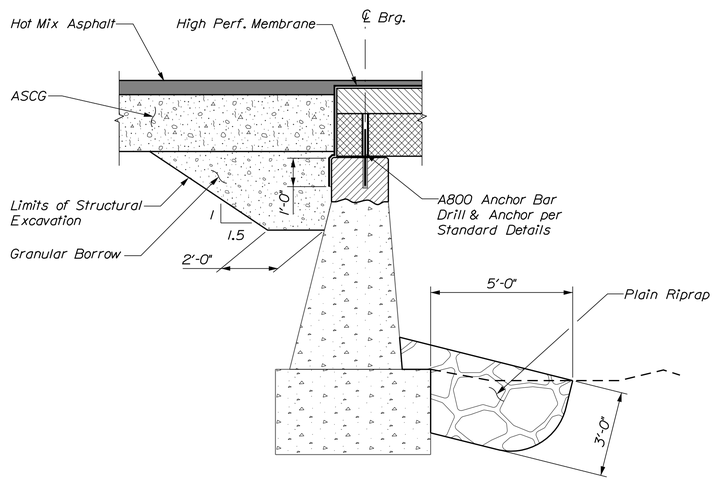

TYPICAL ABUTMENT SECTION

ABUTMENT NOTES

1. Reinforcing steel shall have a minimum concrete cover of 2 inches in the walls unless otherwise noted.

2. To ensure an accurate match with the superstructure, the parapet portions of the wingwalls shall be placed after erection of the precast units.

3. Abutments, wingwalls and their footings shall be backfilled with Granular Borrow. Refer to General Construction Note 6 for fill placed below EL. 28.0 Pay limits will be the structural excavation limits in cut areas and a vertical plane located 10 feet behind the walls in fill areas.

STATE OF MAINE
DEPARTMENT OF TRANSPORTATION

STP-2049(100)

WIN 20491.00

BRIDGE NO. 2981

BRIDGE PLANS

	JCK	BY	DATE
PROJ. MANAGER			
DESIGN-DETAILED	JRS	BJN	JAN 2016
CHECKED-REVIEWED	CLD	CLD	
DESIGN2-DETAILED2	K.MAGUIRE	T.WHITE	SEPT 2014
DESIGN3-DETAILED3	------	------	------
REVISIONS 1	------	------	------
REVISIONS 2	------	------	------
REVISIONS 3	------	------	------
REVISIONS 4	------	------	------
FIELD CHANGES	------	------	------

SIGNATURE

P.E. NUMBER

DATE

BAKERY BRIDGE
MEGUNTICOOK RIVER
CAMDEN KNOX COUNTY

ABUTMENT DETAILS

SHEET NUMBER

11

OF 26

Filename: ...\MSTA\011_Abutment_det.dgn Division: BRIDGE Username: Brian.J.Nichols Date:1/20/2016

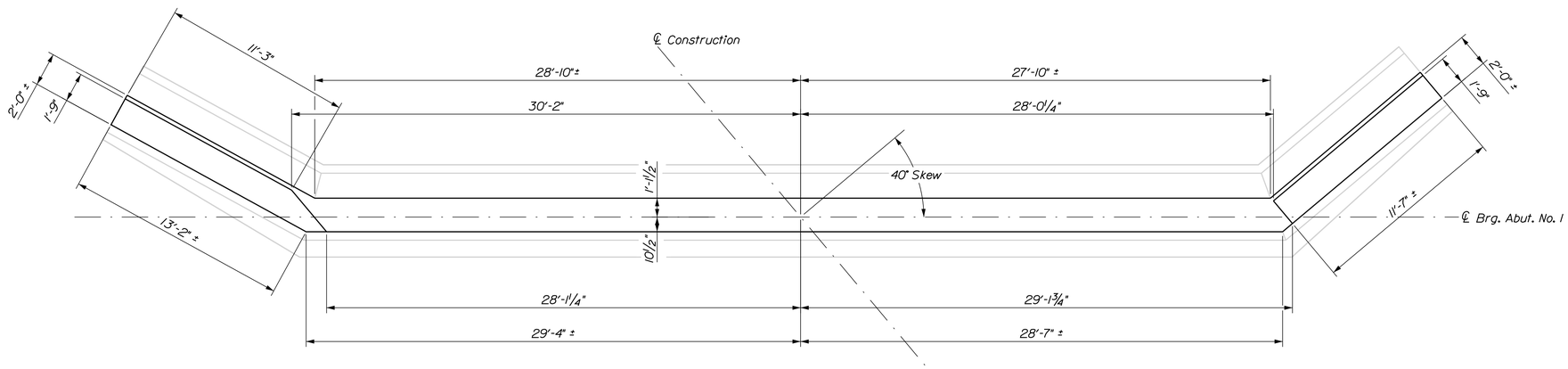

ABUTMENT NO. 1 PLAN

Flow

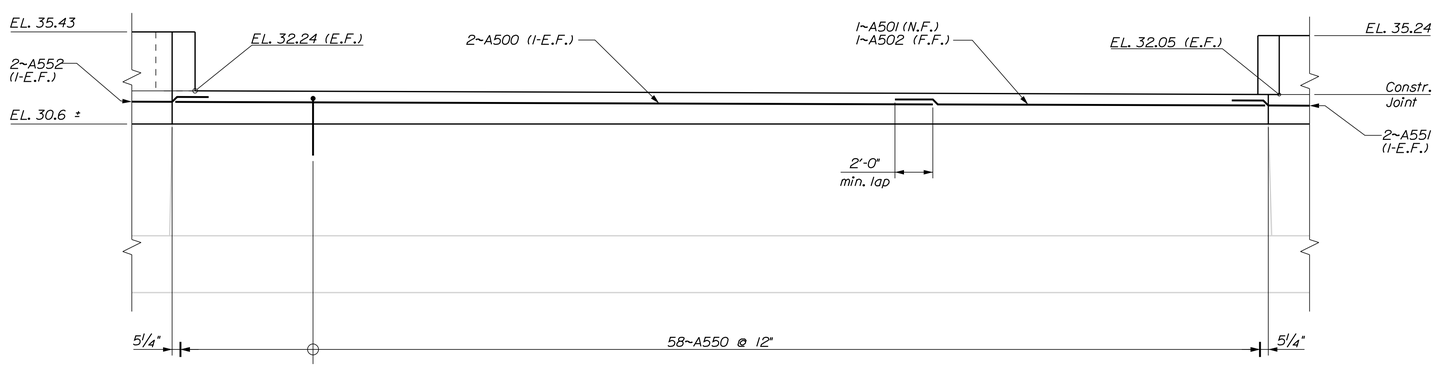

ABUTMENT NO. 1 ELEVATION

Flow

STATE OF MAINE
DEPARTMENT OF TRANSPORTATION

STP-2049(100)

WIN 20491.00

BRIDGE NO. 2981

BRIDGE PLANS

PROJ. MANAGER	JCK	BY	DATE
DESIGN-DETAILED	JRS	BJN	
CHECKED-REVIEWED	CLD	CLD	JAN 2016
DESIGN2-DETAILED2	K.MAGUIRE	T.WHITE	SEPT 2014
DESIGN3-DETAILED3	------	------	------
REVISIONS 1	------	------	------
REVISIONS 2	------	------	------
REVISIONS 3	------	------	------
REVISIONS 4	------	------	------
FIELD CHANGES	------	------	------

SIGNATURE

P.E. NUMBER

DATE

BAKERY BRIDGE
MEGUNTICOOK RIVER
CAMDEN KNOX COUNTY

ABUTMENT NO. 1 PLAN

SHEET NUMBER

12

OF 26

Filename: ...\MSTA\012_Abutment_1_pln.dgn Division: BRIDGE Username: Brian.J.Nichols Date:1/25/2016

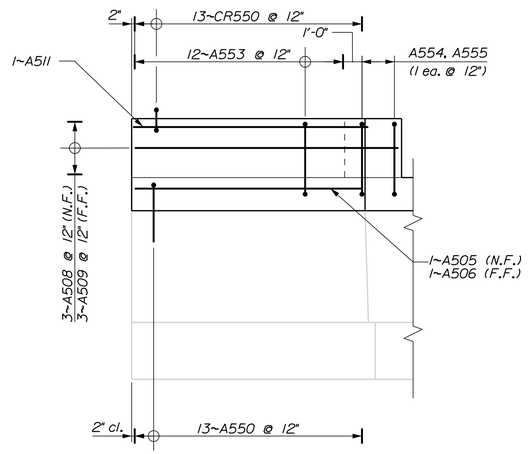

UPSTREAM WING ELEVATION

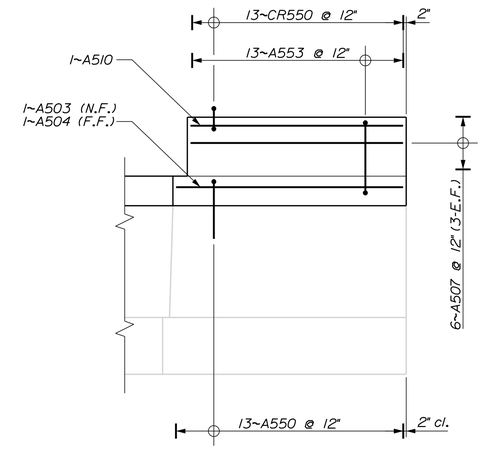

DOWNSTREAM WING ELEVATION

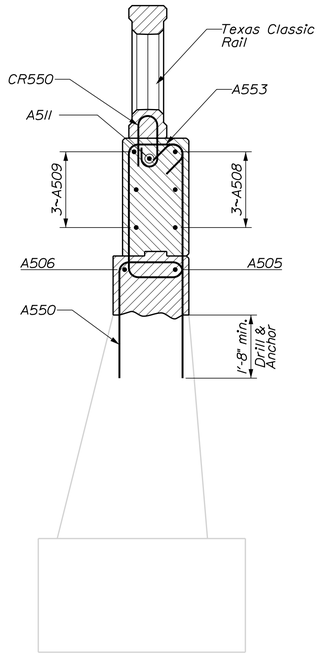

UPSTREAM WING SECTION

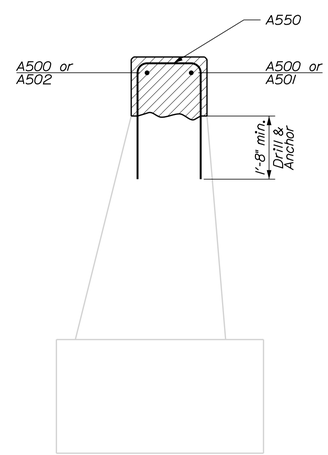

BREASTWALL SECTION

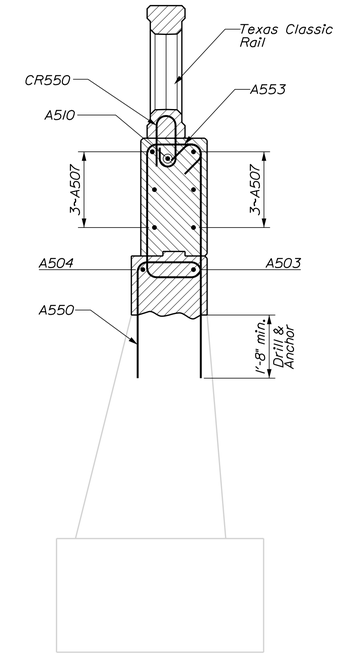

DOWNSTREAM WING SECTION

STATE OF MAINE
DEPARTMENT OF TRANSPORTATION

STP-2049(100)

WIN 20491.00

BRIDGE NO. 2981

BRIDGE PLANS

PROJ. MANAGER	JCK	BY	DATE
DESIGN-DETAILED	JRS	BJN	
CHECKED-REVIEWED	CLD	CLD	JAN 2016
DESIGN2-DETAILED2	K.MAGUIRE	T.WHITE	SEPT 2014
DESIGN3-DETAILED3	------	------	------
REVISIONS 1	------	------	------
REVISIONS 2	------	------	------
REVISIONS 3	------	------	------
REVISIONS 4	------	------	------
FIELD CHANGES	------	------	------

SIGNATURE

P.E. NUMBER

DATE

BAKERY BRIDGE
MEGUNTICOOK RIVER
CAMDEN KNOX COUNTY

ABUTMENT NO. 1 DETAILS

SHEET NUMBER

13

OF 26

Filename: ...\MSTA\013_Abutment_1_sect.dgn Division: BRIDGE Username: Brian.J.Nichols Date:1/20/2016

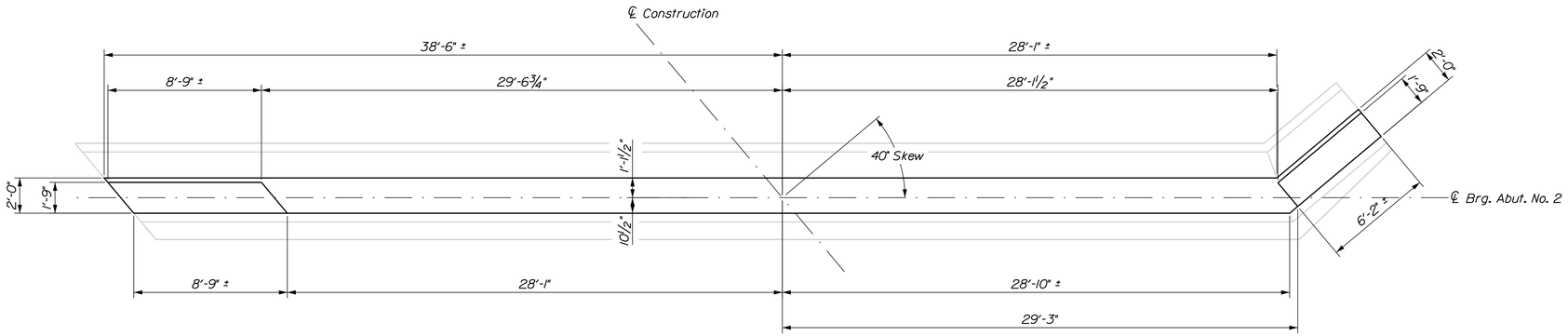

ABUTMENT NO. 2 PLAN

Flow

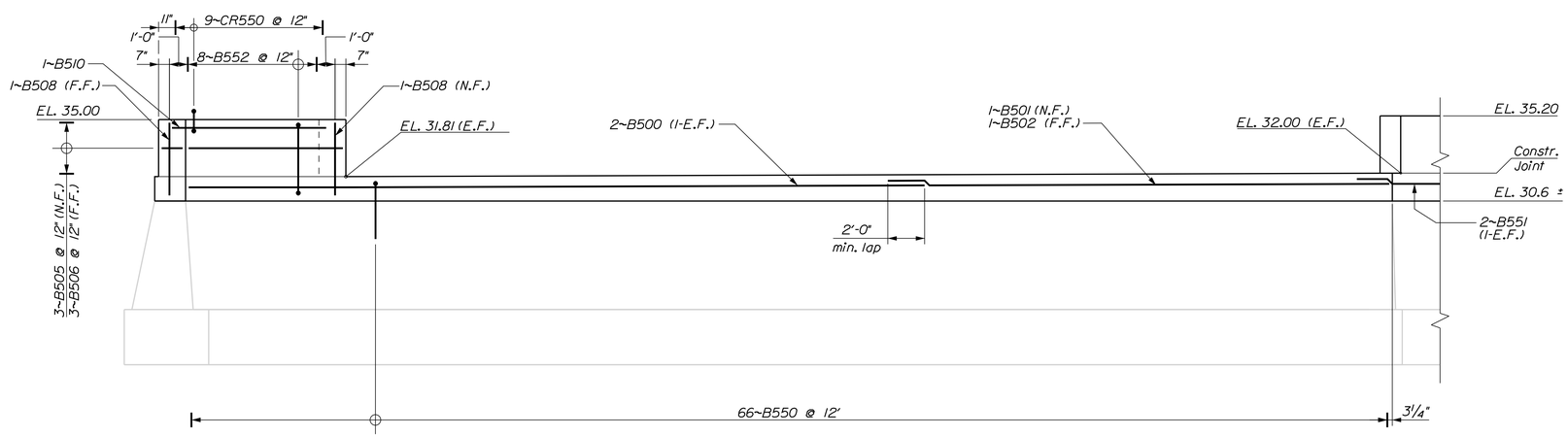

ABUTMENT NO. 2 ELEVATION

Flow

STATE OF MAINE
DEPARTMENT OF TRANSPORTATION

STP-2049(100)

WIN 20491.00

BRIDGE NO. 2981

BRIDGE PLANS

PROJ. MANAGER		BY	DATE
DESIGN-DETAILED	JRS	BJN	JAN 2016
CHECKED-REVIEWED	CLD	CLD	SIGNATURE
DESIGN2-DETAILED2	K.MAGUIRE	T. WHITE	SEPT 2014
DESIGN3-DETAILED3	------	------	P.E. NUMBER
REVISIONS 1	------	------	------
REVISIONS 2	------	------	------
REVISIONS 3	------	------	DATE
REVISIONS 4	------	------	------
FIELD CHANGES	------	------	------

BAKERY BRIDGE
MEGUNTICOOK RIVER
CAMDEN KNOX COUNTY

ABUTMENT NO. 2 PLAN

SHEET NUMBER

14

OF 26

Filename: ...\MSTA\014_Abutment_2_pln.dgn Division: BRIDGE Username: Brian.J.Nichols Date:1/25/2016

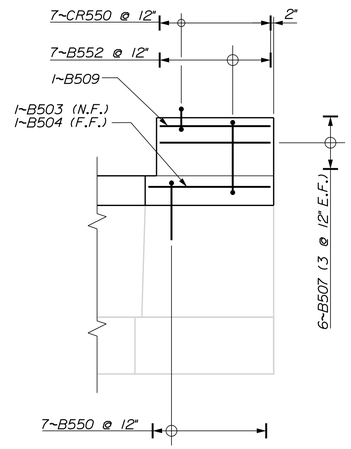

UPSTREAM WING ELEVATION

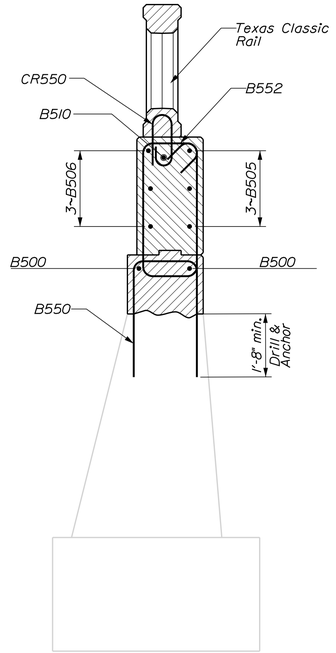

DOWNSTREAM WING SECTION

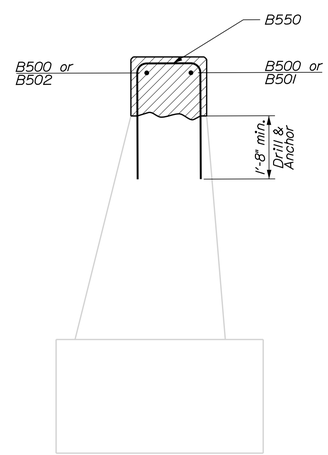

BREASTWALL SECTION

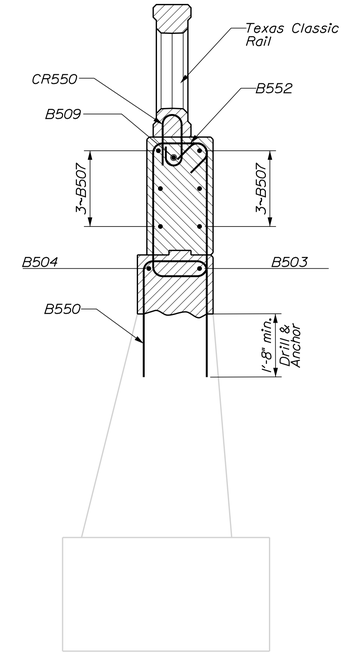

UPSTREAM WING SECTION

STATE OF MAINE
DEPARTMENT OF TRANSPORTATION

STP-2049(100)

WIN 20491.00

BRIDGE NO. 2981

BRIDGE PLANS

PROJ. MANAGER	JCK	BY	DATE
DESIGN-DETAILED	JRS	BJN	
CHECKED-REVIEWED	CLD	CLD	JAN 2016
DESIGN2-DETAILED2	K.MAGUIRE	T.WHITE	SEPT 2014
DESIGN3-DETAILED3	------	------	------
REVISIONS 1	------	------	------
REVISIONS 2	------	------	------
REVISIONS 3	------	------	------
REVISIONS 4	------	------	------
FIELD CHANGES	------	------	------

SIGNATURE

P.E. NUMBER

DATE

BAKERY BRIDGE
MEGUNTICOOK RIVER
CAMDEN KNOX COUNTY

ABUTMENT NO. 2 DETAILS

SHEET NUMBER

15

OF 26

Filename: ...\MSTA\015_Abutment_2_sect.dgn Division: BRIDGE Username: Brian.J.Nichols Date:1/20/2016

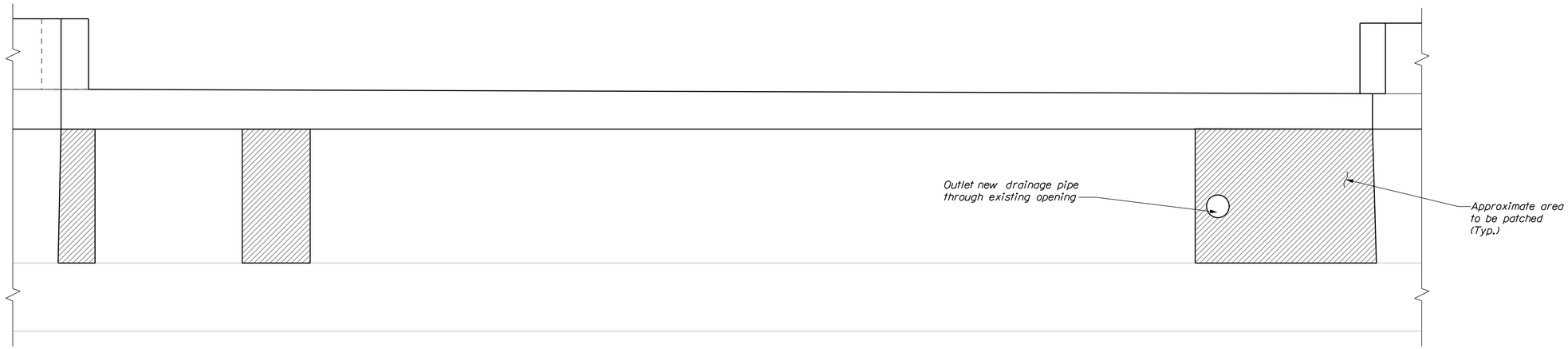

ABUTMENT NO. 1 ELEVATION

Flow

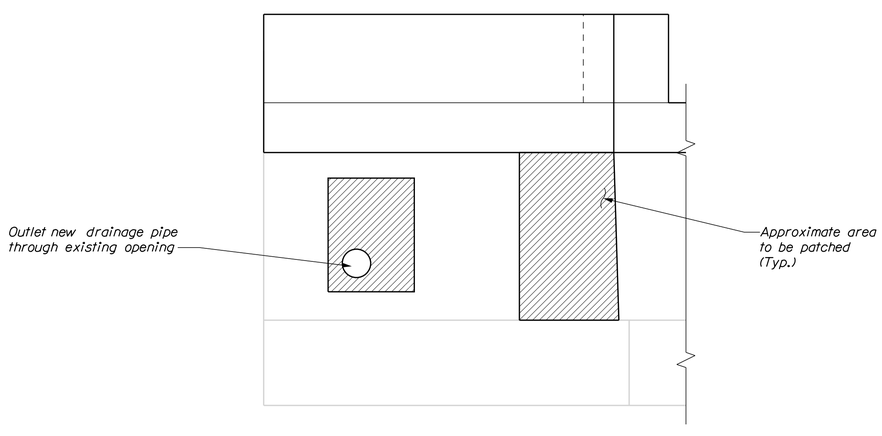

UPSTREAM WING ELEVATION

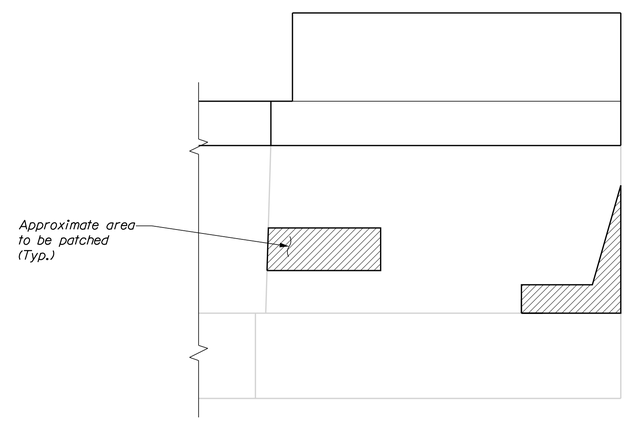

DOWNSTREAM WING ELEVATION

STATE OF MAINE
DEPARTMENT OF TRANSPORTATION

STP-2049(100)

WIN 20491.00

BRIDGE NO. 2981

BRIDGE PLANS

			DATE
PROJ. MANAGER		JCK	
DESIGN-DETAILED	JRS	BJN	JAN 2016
CHECKED-REVIEWED	CLD	CLD	JAN 2016
DESIGN2-DETAILED2	K.MAGUIRE	T.WHITE	SEPT 2014
DESIGN3-DETAILED3	------	------	------
REVISIONS 1	------	------	------
REVISIONS 2	------	------	------
REVISIONS 3	------	------	------
REVISIONS 4	------	------	------
FIELD CHANGES	------	------	------

SIGNATURE

P.E. NUMBER

DATE

BAKERY BRIDGE
MEGUNTICOOK RIVER
CAMDEN KNOX COUNTY

ABUTMENT 1 REHAB

SHEET NUMBER

16

OF 26

Filename: ...\MSTA\016_Abutment_1_rehabt.dgn Division: BRIDGE Username: Brian.J.Nichols Date:1/20/2016

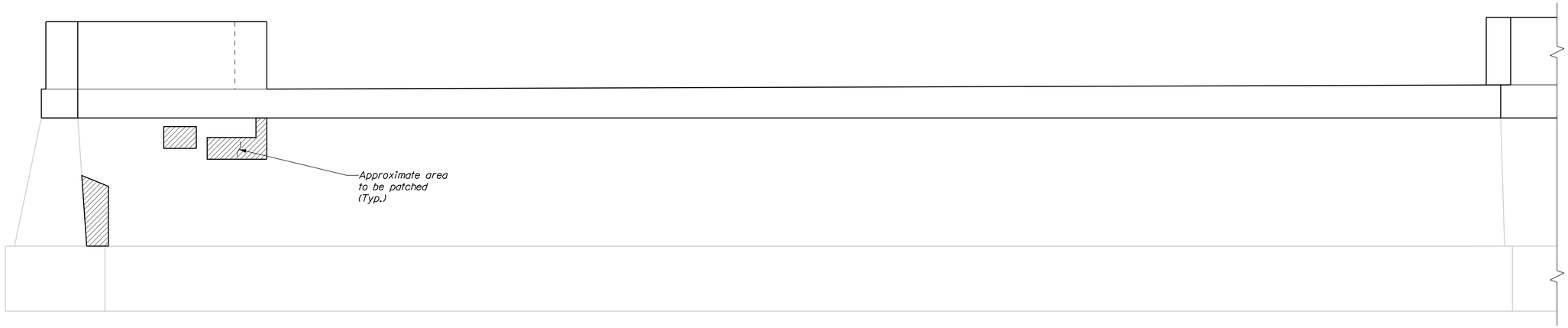

ABUTMENT NO. 2 ELEVATION

Flow

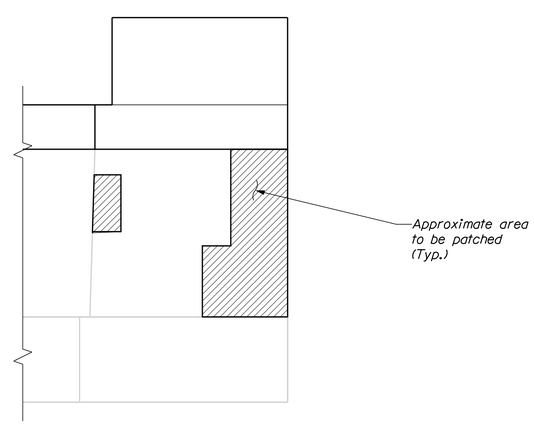

UPSTREAM WING ELEVATION

STATE OF MAINE
DEPARTMENT OF TRANSPORTATION

STP-2049(100)

WIN
20491.00

BRIDGE NO. 2981

BRIDGE PLANS

PROJ. MANAGER		BY	DATE
DESIGN-DETAILED	JRS	BJN	
CHECKED-REVIEWED	CLD	CLD	JAN 2016
DESIGN2-DETAILED2	K.MAGUIRE	T.WHITE	SEPT 2014
DESIGN3-DETAILED3	------	------	------
REVISIONS 1	------	------	------
REVISIONS 2	------	------	------
REVISIONS 3	------	------	------
REVISIONS 4	------	------	------
FIELD CHANGES	------	------	------

SIGNATURE

P.E. NUMBER

DATE

BAKERY BRIDGE
MEGUNTICOOK RIVER
CAMDEN KNOX COUNTY

ABUTMENT 2 REHAB

SHEET NUMBER

17

OF 26

Filename: ...\MSTA\017_Abutment_2_rehab1.dgn Division: BRIDGE Username: Brian.J.Nichols Date:1/20/2016

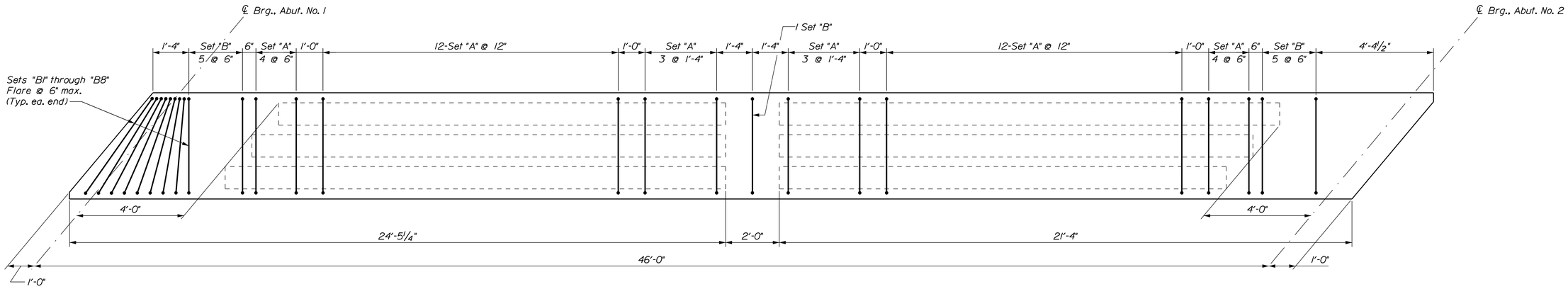

PRECAST VOIDED SLAB PLAN

~Type S48-18~

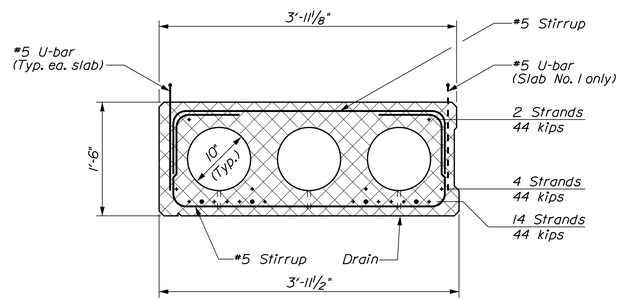

EXTERIOR SLAB SECTION

Slab No.1 Shown - Slab No. 11 opposite hand
~Section through voids - Set "A" Reinforcing shown~

+ = 0.6" Strand - Fully bonded
• = 0.6" Strand - Debonded 4'-0"

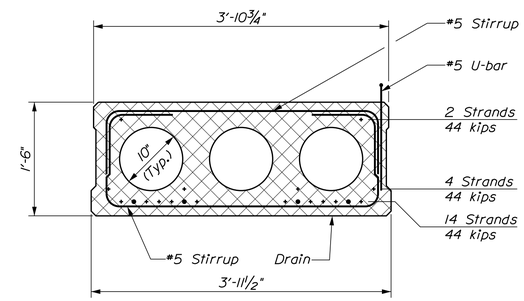

INTERIOR SLAB SECTION

~Section through voids - Set "A" Reinforcing shown~

+ = 0.6" Strand - Fully bonded
• = 0.6" Strand - Debonded 4'-0"

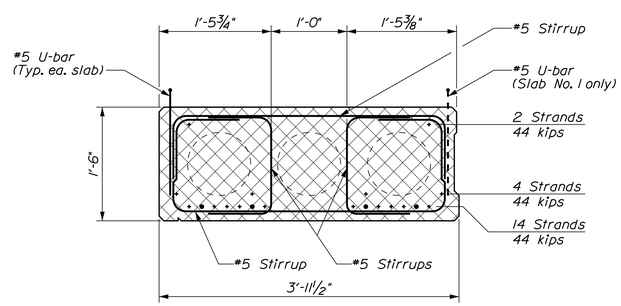

EXTERIOR SLAB SECTION

Slab No.1 Shown - Slab No. 11 opposite hand
~Section through voids - Set "B" Reinforcing shown~

+ = 0.6" Strand - Fully bonded
• = 0.6" Strand - Debonded 4'-0"

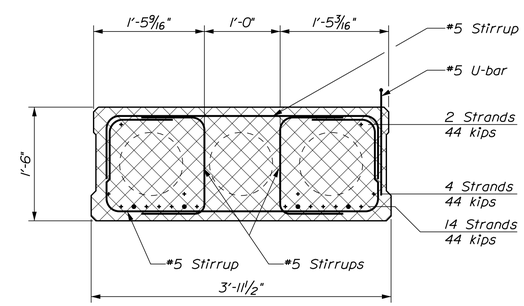

INTERIOR SLAB SECTION

~Section through diaphragms - Set "B" Reinforcing shown~

+ = 0.6" Strand - Fully bonded
• = 0.6" Strand - Debonded 4'-0"

STATE OF MAINE
DEPARTMENT OF TRANSPORTATION

STP-2049(100)

WIN 20491.00

BRIDGE NO. 2981

BRIDGE PLANS

PROJ. MANAGER	JCK	BY	DATE
DESIGN-DETAILED	JRS	BJN	
CHECKED-REVIEWED	CLD	CLD	JAN 2016
DESIGN2-DETAILED2	K.MAGUIRE	T.WHITE	SEPT 2014
DESIGN3-DETAILED3	------	------	------
REVISIONS 1	------	------	------
REVISIONS 2	------	------	------
REVISIONS 3	------	------	------
REVISIONS 4	------	------	------
FIELD CHANGES	------	------	------

SIGNATURE

P.E. NUMBER

DATE

BAKERY BRIDGE
MEGUNTICOOK RIVER
CAMDEN KNOX COUNTY

PRECAST VOIDED SLAB

SHEET NUMBER

18

OF 26

Filename: ...\MSTA\018_Precast_Slab.dgn Division: BRIDGE Username: Brian.J.Nichols Date:1/20/2016

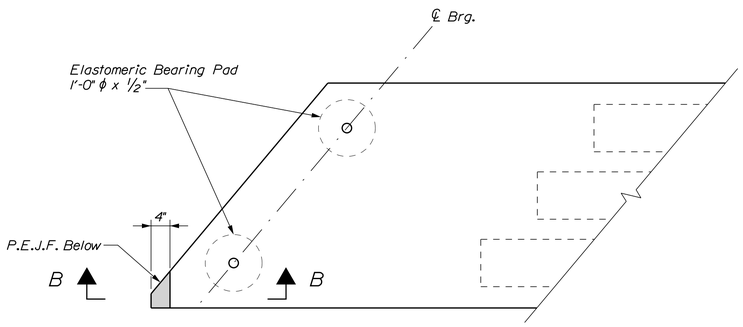

SLAB END DETAIL

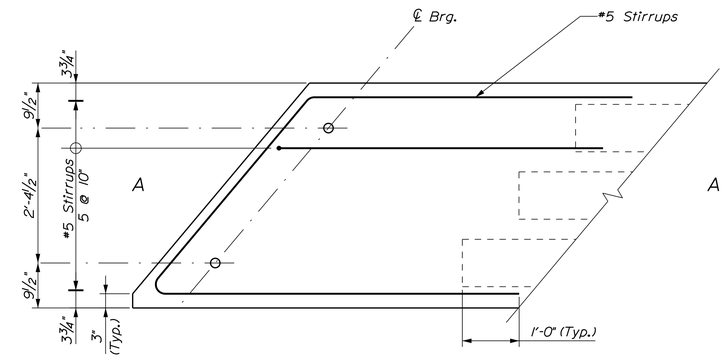

END BLOCK REINFORCING

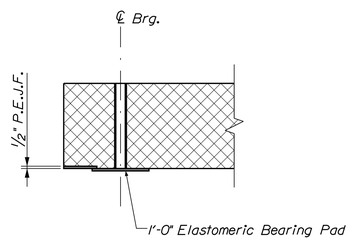

SLAB END DETAIL
~Section "B-B"~

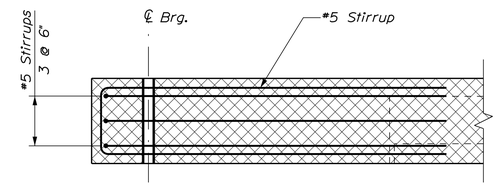

END BLOCK REINFORCING
~SECTION "A-A"~
Shear reinforcing omitted for clarity

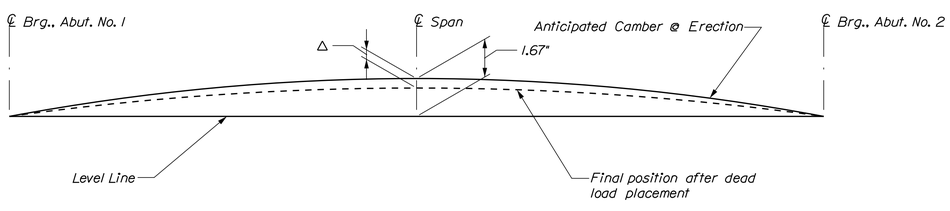

CAMBER DIAGRAM
Δ = 1/2" Due to loads placed after erection.

PRECAST CONCRETE SUPERSTRUCTURE NOTES

1. Install a 1-in. diameter nonmetallic void drain in the bottom of each void at both ends.

2. The top surface shall be raked to a surface roughness of approx. 1/4".

3. The drilling of holes in the prestressed slabs and the use of power actuated tools on the beams will not be permitted.

4. Neoprene pads shall be either polychloroprene or natural polyisoprene of 50 +/- 5 Shore A durometer hardness, and shall conform to the requirements of Division 2, Section 18.2 of AASHTO Standard Specifications for Highway Bridges. Neoprene pads will not be paid for directly but will be considered incidental to related contract items.

5. Reinforcing steel shall have a minimum concrete cover of 2 inches unless otherwise noted.

6. Screed rails shall be installed to the elevation shown on the profile, adjusted for wearing course thickness and cross slope.

STATE OF MAINE
DEPARTMENT OF TRANSPORTATION

STP-2049(100)

WIN 20491.00

BRIDGE NO. 2981

BRIDGE PLANS

	JCK	BY	DATE
PROJ. MANAGER			
DESIGN-DETAILED	JRS	BJN	JAN 2016
CHECKED-REVIEWED	CLD	CLD	SEPT 2014
DESIGN2-DETAILED2	K.MAQUIRE	T.WHITE	------
DESIGN3-DETAILED3	------	------	------
REVISIONS 1	------	------	------
REVISIONS 2	------	------	------
REVISIONS 3	------	------	------
REVISIONS 4	------	------	------
FIELD CHANGES	------	------	------

SIGNATURE

P.E. NUMBER

DATE

BAKERY BRIDGE
MEGUNTICOOK RIVER
CAMDEN KNOX COUNTY

PRECAST DETAILS

SHEET NUMBER
19
OF 26

Filename: ...\MSTA\019_Precast_Details.dgn Division: BRIDGE Username: Brian.J.Nichols Date:1/21/2016

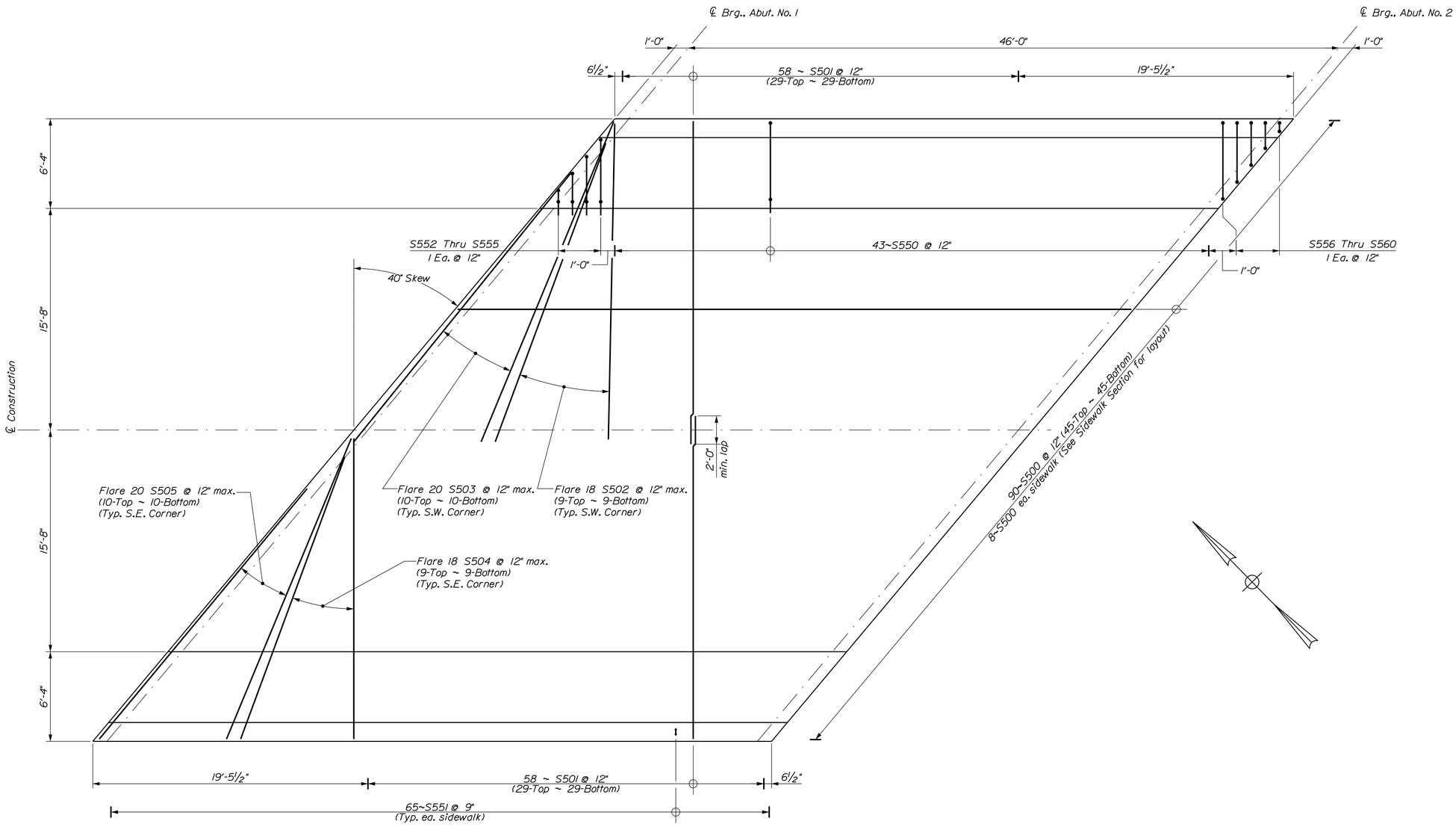

SUPERSTRUCTURE PLAN

STATE OF MAINE
DEPARTMENT OF TRANSPORTATION

STP-2049(100)

WIN 20491.00

BRIDGE NO. 2981

BRIDGE PLANS

			DATE
PROJ. MANAGER	JCK	BY	DATE
DESIGN-DETAILED	JRS	BJN	JAN 2016
CHECKED-REVIEWED	CLD	CLD	
DESIGN2-DETAILED2	K.MAGUIRE	T.WHITE	SEPT 2014
DESIGN3-DETAILED3	------	------	------
REVISIONS 1	------	------	------
REVISIONS 2	------	------	------
REVISIONS 3	------	------	------
REVISIONS 4	------	------	------
FIELD CHANGES	------	------	------

SIGNATURE

P.E. NUMBER

DATE

BAKERY BRIDGE
MEGUNTICOOK RIVER
CAMDEN KNOX COUNTY

SUPERSTRUCTURE PLAN

SHEET NUMBER

20

OF 26

Filename: ...\MSTA\020_Superstructure.dgn Division: BRIDGE Username: Brian.J.Nichols Date:1/20/2016

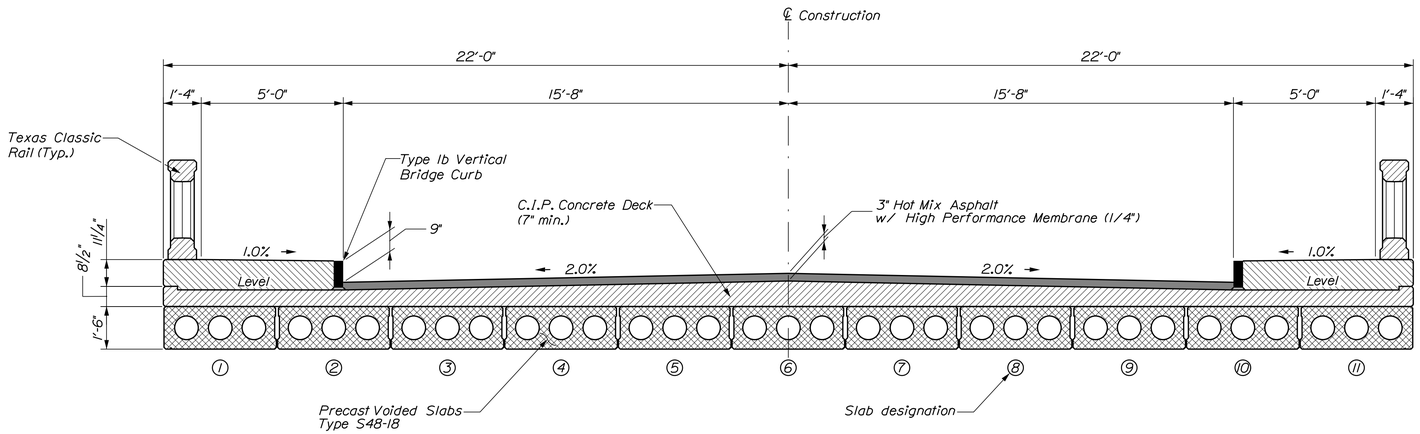

TRANSVERSE SUPERSTRUCTURE SECTION

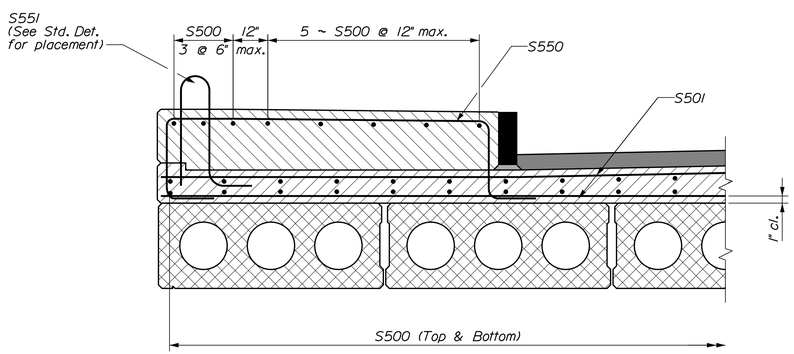

SIDEWALK SECTION

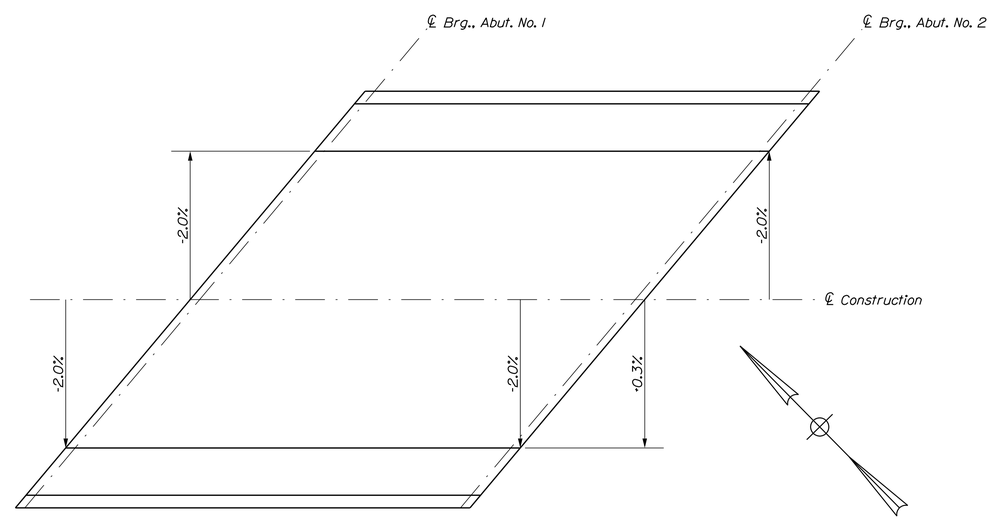

DECK CROSS-SLOPE DIAGRAM

SUPERSTRUCTURE NOTES

1. Reinforcing steel shall have a minimum concrete cover of 2 inches unless otherwise noted.

2. Form a one inch V-groove on the fascias at the horizontal joint between the curb and slab and between slab and precast.

3. The superstructure slab concrete for shall be placed continuously and shall be kept plastic until the entire placement has been made.

4. Mortar for bedding and for joints in the granite curb shall contain an approved non-shrink additive.

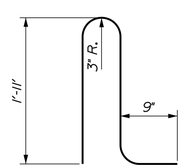

S551 BEND DIAGRAM

STATE OF MAINE
DEPARTMENT OF TRANSPORTATION

STP-2049(100)

WIN 20491.00

BRIDGE NO. 2981

BRIDGE PLANS

		BY	DATE
PROJ. MANAGER	JCK		
DESIGN-DETAILED	JRS	BJN	JAN 2016
CHECKED-REVIEWED	CLD	CLD	SEPT 2014
DESIGN2-DETAILED2	K.MAGUIRE	T.WHITE	------
DESIGN3-DETAILED3	------	------	------
REVISIONS 1	------	------	------
REVISIONS 2	------	------	------
REVISIONS 3	------	------	------
REVISIONS 4	------	------	------
FIELD CHANGES	------	------	------

SIGNATURE

P.E. NUMBER

DATE

BAKERY BRIDGE
MEGUNTICOOK RIVER
CAMDEN KNOX COUNTY

SUPERSTRUCTURE DETAILS

SHEET NUMBER

21

OF 26

Filename: ...\021_Superstructure_det.dgn Division: BRIDGE Username: Brian.J.Nichols Date:1/20/2016

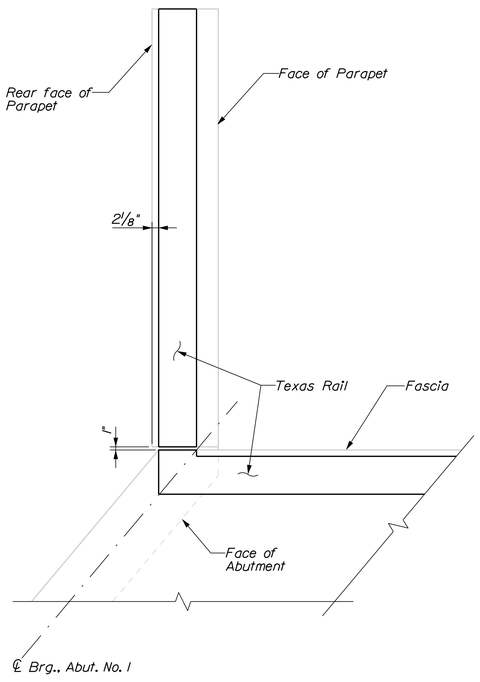

TEXAS RAIL LAYOUT
Abutment No. 1, Downstream Wing shown
Abutment No. 2 Upstream Wing similar

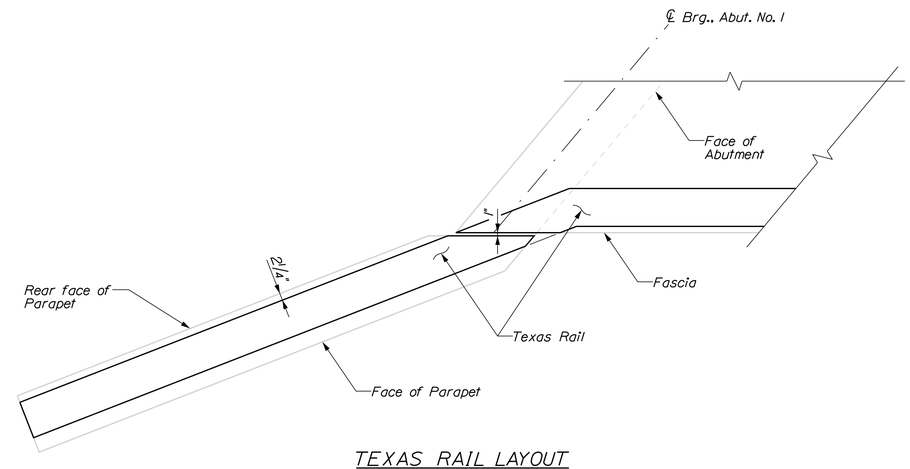

TEXAS RAIL LAYOUT
Abutment No. 1, Upstream Wing

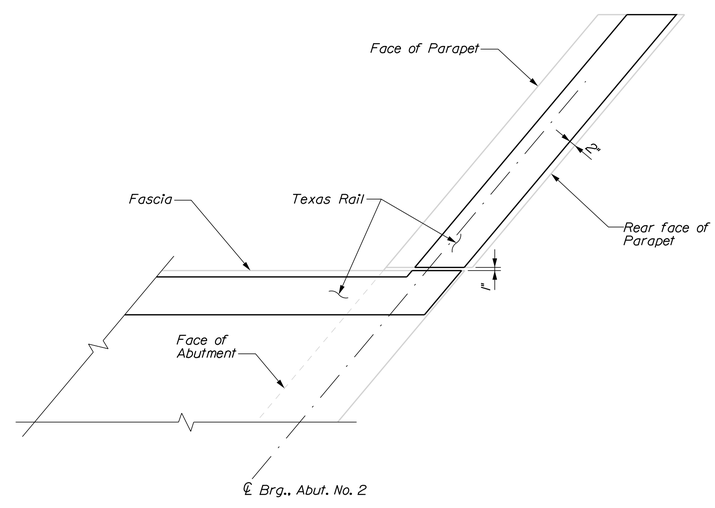

TEXAS RAIL LAYOUT
Abutment No. 2, Downstream Wing

TEXAS RAIL NOTES

1. Texas Rail to be constructed along entire lengths of existing wingwalls.
2. Layout of Texas Rail shall be approved by the Resident prior to any rebar or concrete placement.
3. Lengths of wingwalls to be field determined.

STATE OF MAINE
DEPARTMENT OF TRANSPORTATION

STP-2049(100)

WIN 20491.00

BRIDGE NO. 2981

BRIDGE PLANS

PROJ. MANAGER	JCK	BY	DATE
DESIGN-DETAILED	JRS	BJN	JAN 2016
CHECKED-REVIEWED	CLD	CLD	SEPT 2014
DESIGN2-DETAILED2	K.MAGUIRE	T.WHITE	------
DESIGN3-DETAILED3	------	------	------
REVISIONS 1	------	------	------
REVISIONS 2	------	------	------
REVISIONS 3	------	------	------
REVISIONS 4	------	------	------
FIELD CHANGES	------	------	------

SIGNATURE

P.E. NUMBER

DATE

BAKERY BRIDGE
MEGUNTICOOK RIVER
CAMDEN KNOX COUNTY

TEXAS RAIL PLAN

SHEET NUMBER
22
OF 26

Filename: ...\00\BRIDGE\MSTA\022_Rail.dgn Division: BRIDGE Username: Brian.J.Nichols Date:1/20/2016

STRAIGHT BARS

MARK	QTY.	LENGTH	LOCATION	MARK	QTY.	LENGTH	LOCATION
A500	2	40'-0"	Bridge Seat	B500	2	4'-2"	Bridge Seat
A501	1	17'-11"	Bridge Seat	B501	1	27'-7"	Bridge Seat
A502	1	18'-8"	Bridge Seat	B502	1	28'-7"	Bridge Seat
A503	1	12'-4"	Wing Horiz.	B503	1	6'-9"	Wing Horiz.
A504	1	11'-7"	Wing Horiz.	B504	1	6'-1"	Wing Horiz.
A505	1	13'-2"	Wing Horiz.	B505	3	8'-8"	Parapet Horiz.
A506	1	12'-8"	Wing Horiz.	B506	3	8'-8"	Parapet Horiz.
A507	6	11'-2"	Parapet Horiz.	B507	6	5'-10"	Parapet Horiz.
A508	3	13'-2"	Parapet Horiz.	B508	2	3'-6"	Parapet Vert
A509	3	11'-3"	Parapet Horiz.	B509	1	5'-10"	Parapet Horiz.
A510	1	11'-1"	Parapet Horiz.	B510	1	8'-4"	Parapet Horiz.
A511	1	12'-5"	Parapet Horiz.				
A800	44	2'-0"	Abutment Pin				
S500	90	47'-8"	Deck Longitdunal				
S501	116	22'-10"	Deck Transverse				
S502	36	22'-4"	Deck Flared Bar				
S503	40	24'-5"	Deck Flared Bar				
S504	36	21'-3"	Deck Flared Bar				
S505	40	23'-0"	Deck Flared Bar				

BENT BARS

MARK	QTY.	LENGTH	TYPE	A	B	C	D	E	F	G	H	O	R	LOCATION
A550	84	8'-0"	SC	0"	3'-2"	1'-8"	3'-2"	-	-	0"	-	-	-	Abutment Stirrup
A551	2	6'-1"	V	-	-	-	2'-2"	2'-2"	-	0'-6"	1'-3"	-	-	Abutment Horiz.
A552	2	5'-3"	V	-	-	-	2'-2"	2'-2"	-	0"	0'-11"	-	-	Abutment Horiz.
A553	25	10'-10"	H	0'-6"	1'-5"	3'-6"	1'-5"	3'-6"	-	0'-6"	-	-	-	Parapet Stirrup
A554	1	10'-8"	H	0'-6"	1'-4"	3'-6"	1'-4"	3'-6"	-	0'-6"	-	-	-	Parapet Stirrup
A555	1	9'-10"	H	0'-6"	0'-11"	3'-6"	0'-11"	3'-6"	-	0'-6"	-	-	-	Parapet Stirrup
B550	73	8'-0"	SC	0"	3'-2"	1'-8"	3'-2"	-	-	0"	-	-	-	Abutment Stirrup
B551	2	5'-7"	V	-	-	-	2'-2"	2'-2"	-	-	1'-3"	-	-	Abutment Horiz.
B552	15	10'-10"	H	0'-6"	1'-5"	3'-6"	1'-5"	3'-6"	-	0'-6"	-	-	-	Parapet Stirrup
CR550	42	3'-2"	C	1'-4"	1'-4"	0'-6"	-	-	-	-	-	-	0'-3"	Rail Stirrup
S550	86	10'-0"	S	0'-10"	1'-4"	5'-8"	1'-4"	-	-	0'-10"	-	-	-	Sidewalk Stirrup
S551	130	5'-1"	S	0"	1'-11"	0'-6"	1'-11"	-	-	0'-9"	-	-	-	Rail Stirrup
S552	2	5'-5"	S	0'-10"	1'-4"	1'-1"	1'-4"	-	-	0'-10"	-	-	-	Sidewalk Stirrup
S553	2	6'-7"	S	0'-10"	1'-4"	2'-3"	1'-4"	-	-	0'-10"	-	-	-	Sidewalk Stirrup
S554	2	7'-9"	S	0'-10"	1'-4"	3'-5"	1'-4"	-	-	0'-10"	-	-	-	Sidewalk Stirrup
S555	2	8'-11"	S	0'-10"	1'-4"	4'-7"	1'-4"	-	-	0'-10"	-	-	-	Sidewalk Stirrup
S556	2	9'-11"	HB	0'-10"	1'-4"	5'-7"	1'-4"	0'-10"	-	0"	-	-	-	Sidewalk Stirrup
S557	2	8'-9"	HB	0'-10"	1'-4"	4'-5"	1'-4"	0'-10"	-	0"	-	-	-	Sidewalk Stirrup
S558	2	7'-7"	HB	0'-10"	1'-4"	3'-3"	1'-4"	0'-10"	-	0"	-	-	-	Sidewalk Stirrup
S559	2	6'-5"	HB	0'-10"	1'-4"	2'-1"	1'-4"	0'-10"	-	0"	-	-	-	Sidewalk Stirrup
S560	2	5'-2"	HB	0'-10"	1'-4"	0'-10"	1'-4"	0'-10"	-	0"	-	-	-	Sidewalk Stirrup

MARK QTY. LENGTH LOCATION MARK QTY. LENGTH LOCATION MARK QTY. LENGTH TYPE A B C D E F G H O R LOCATION

TYPE - BENDING DIAGRAMS

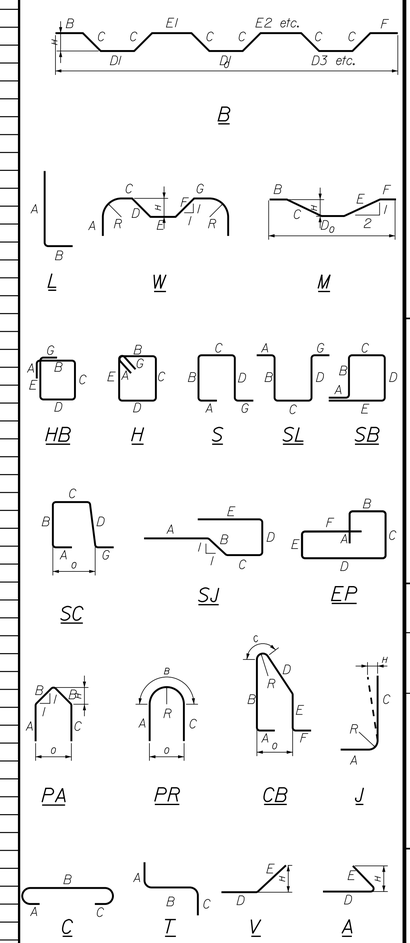

All dimensions are out-to-out of bar.

Bending details and hooks shall conform to the recommendations of the current revision of ACI Standard 315 and ACI Standard 318.

Reinforcing Bar: ASTM A615/A615M, Grade 60

GENERAL NOTES

1. The first two digits following the letter(s) of the mark indicate the size ofthe bar:

   Mark "A502" = bar size #5
   Mark "P805" = bar size #8
   Mark "S650" = bar size #6

2. Each crank bar, Type B, may be replaced by two (2) straight bars (one top and one bottom) of the same bar size as the crank bar. Payment in either case shall be based on crank bars as schedule on the plans.

STATE OF MAINE
DEPARTMENT OF TRANSPORTATION

STP-2049(100)

WIN 20491.00

BRIDGE PLANS

BRIDGE NO. 2981

		BY	DATE
PROJ. MANAGER	JCK	BJN	JAN 2016
DESIGN-DETAILED	JRS	CLD	SEPT 2014
CHECKED-REVIEWED	CLD	T. WHITE	
DESIGN2-DETAILED2	K.MAGUIRE		
DESIGN3-DETAILED3			
REVISIONS 1			
REVISIONS 2			
REVISIONS 3			
REVISIONS 4			
FIELD CHANGES			

SIGNATURE

P.E. NUMBER

DATE

BAKERY BRIDGE
MEGUNTICOOK RIVER
CAMDEN KNOX COUNTY

REINFORCING STEEL SCHEDULE

SHEET NUMBER

23

OF 26

Filename: ...\00\BRIDGE\MSTA\023_Rebar.dgn Division: BRIDGE Username: Brian.J.Nichols Date:1/20/2016

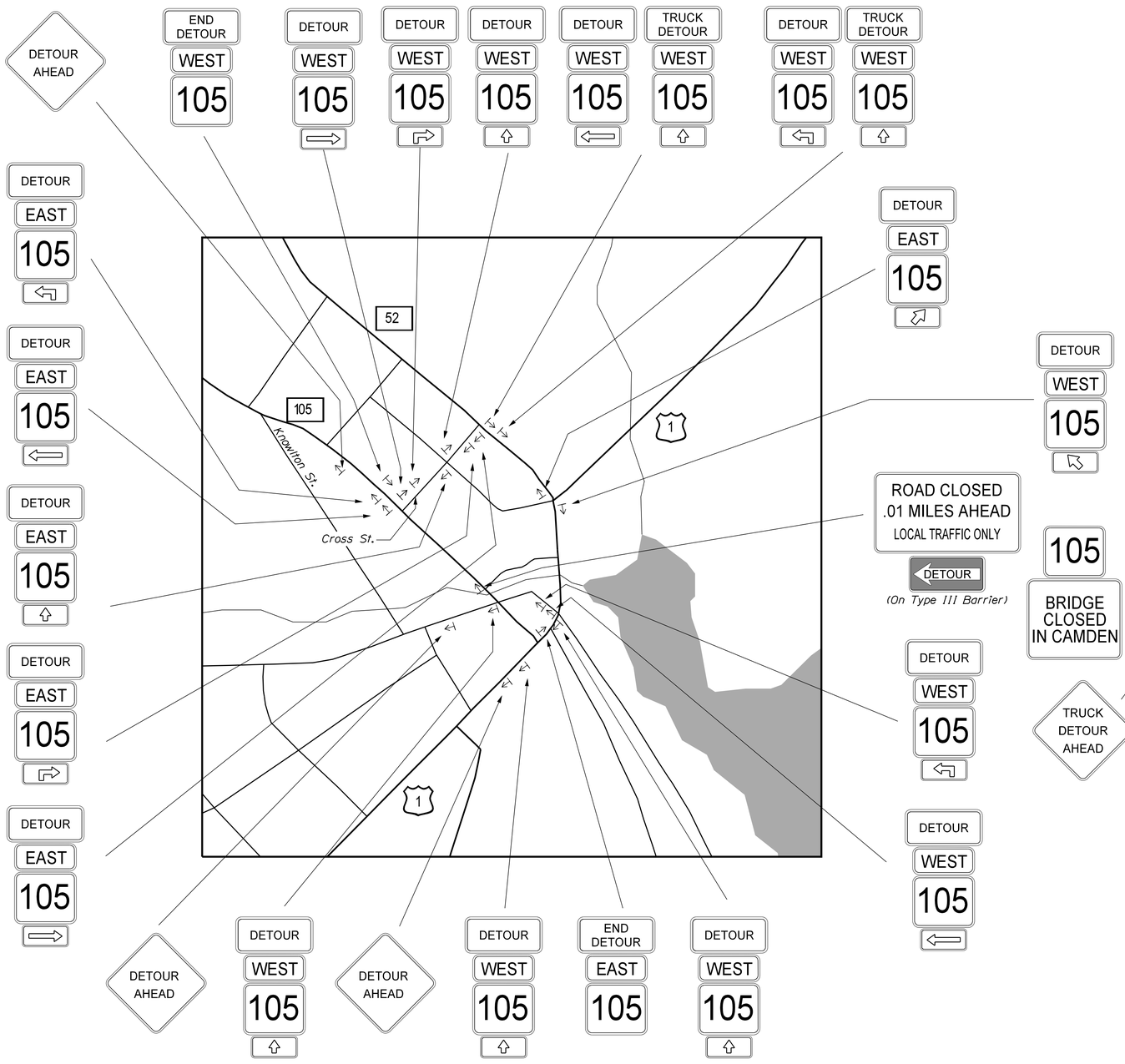

DOWNTOWN SIGNAGE

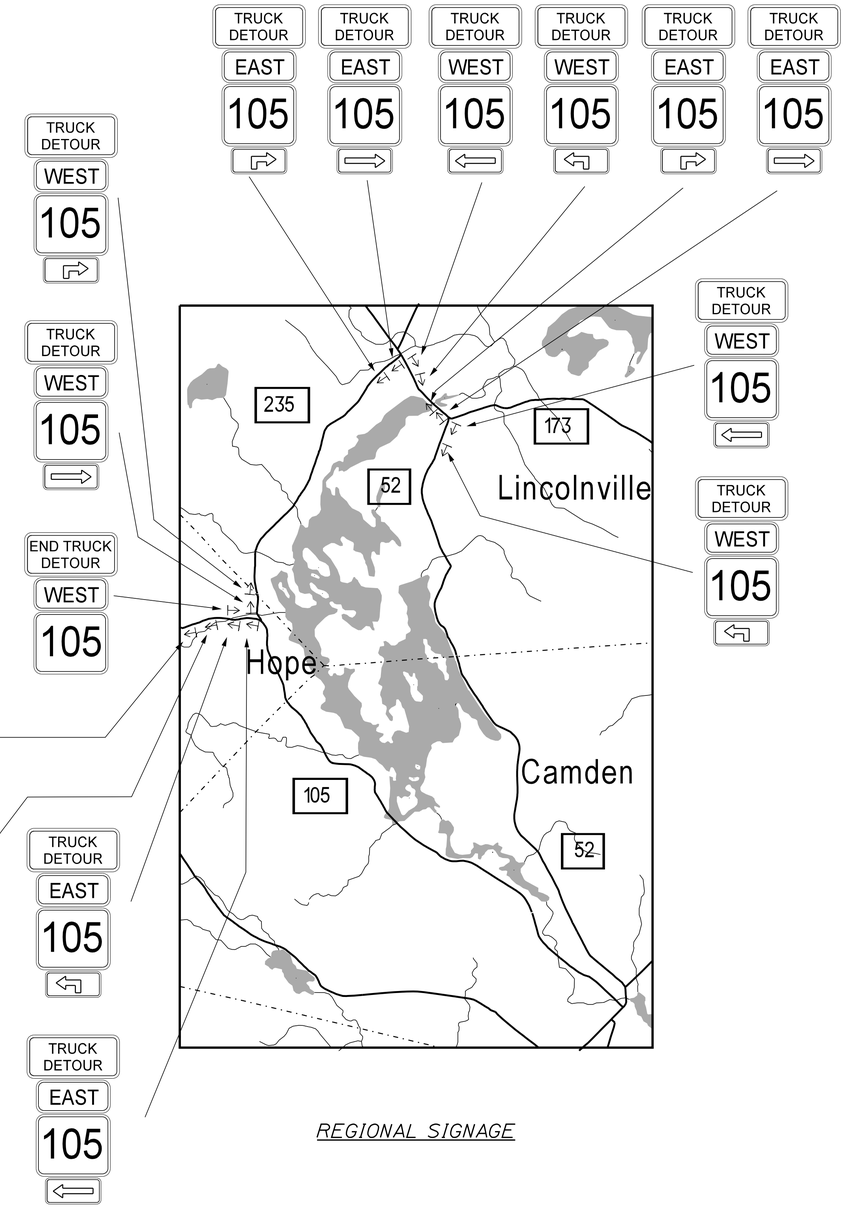

REGIONAL SIGNAGE

STATE OF MAINE
DEPARTMENT OF TRANSPORTATION

STP-2049(100)

WIN 20491.00

BRIDGE NO. 2981

BRIDGE PLANS

	JCK	BY	DATE
PROJ. MANAGER			
DESIGN-DETAILED	JRS	BJN	JAN 2016
CHECKED-REVIEWED	CLD	CLD	SEPT 2014
DESIGN2-DETAILED2	K.MAGUIRE	T.WHITE	
DESIGN3-DETAILED3			
REVISIONS 1			
REVISIONS 2			
REVISIONS 3			
REVISIONS 4			
FIELD CHANGES			

SIGNATURE

P.E. NUMBER

DATE

BAKERY BRIDGE
MEGUNTICOOK RIVER
CAMDEN KNOX COUNTY

DETOUR PLAN

SHEET NUMBER

24

OF 26

Filename: ...\00\BRIDGE\MSTA\024_Detour.dgn Division: BRIDGE Username: Brian.J.Nichols Date:1/20/2016

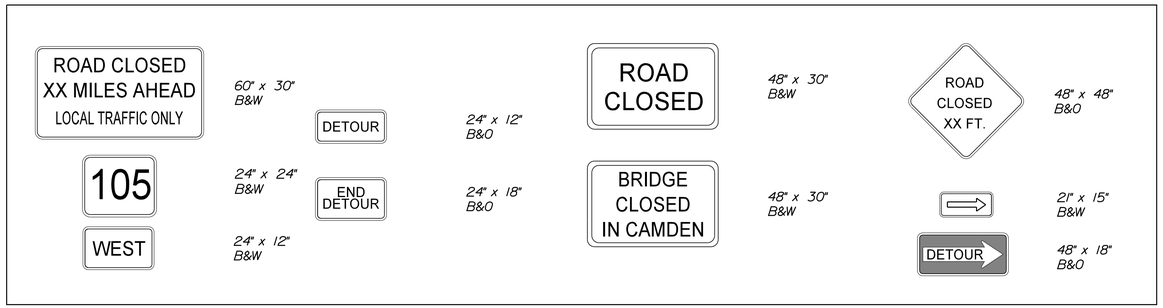

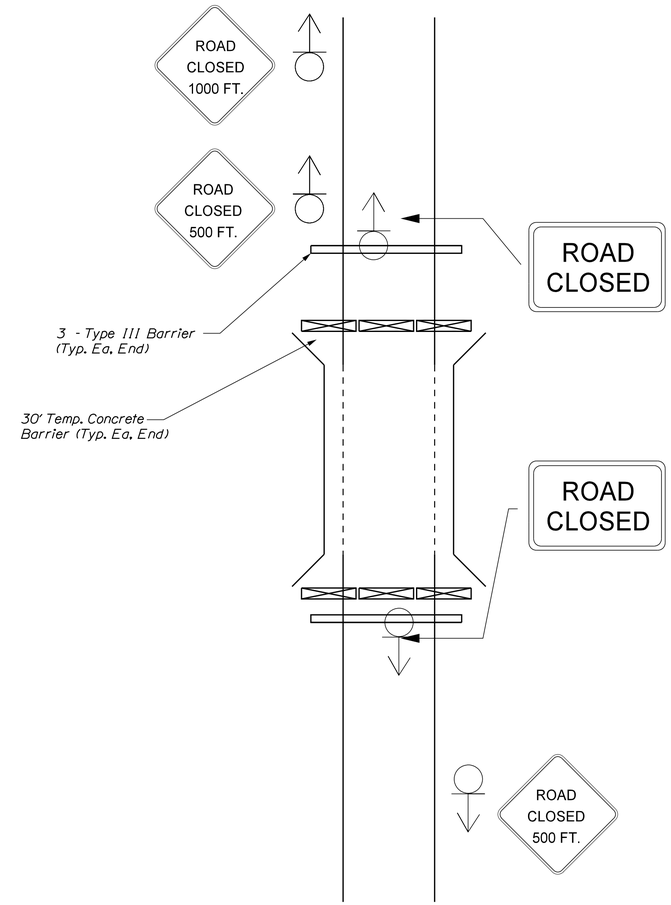

SIGNAGE AT PROJECT LOCATION

DETOUR NOTES

1. Spacing to be determined by the Resident in accordance with MUTCD

2. Install 30' Temporary Concrete Barrier at each end of of project (60' feet total) Payment shall be made under Item No. 526.301-Temporary Concrete Barrier

3. Install 3 Type III Barricades at each end of project and one at north end of detour (7 total) Payment shall be made under Item No. 652.312-Type III Barricade.

4. Cover all conflicting route signs.

STATE OF MAINE
DEPARTMENT OF TRANSPORTATION

STP-2049(100)

WIN 20491.00

BRIDGE NO. 2981

BRIDGE PLANS

PROJ. MANAGER	JCK	BY	DATE
DESIGN-DETAILED	JRS	BJN	JAN 2016
CHECKED-REVIEWED	CLD	CLD	SEPT 2014
DESIGN2-DETAILED2	K.MAGUIRE	T.WHITE	
DESIGN3-DETAILED3			
REVISIONS 1			
REVISIONS 2			
REVISIONS 3			
REVISIONS 4			
FIELD CHANGES			

SIGNATURE

P.E. NUMBER

DATE

CAMDEN — BAKERY BRIDGE — MEGUNTICOOK RIVER — KNOX COUNTY

DETOUR PLAN

SHEET NUMBER

25

OF 26

Filename: ...\00\BRIDGE\MSTA\025_Detour.dgn Division: BRIDGE Username: Brian.J.Nichols Date:1/20/2016

Filename: ...\00\ROW\MSTA\001_RWPLAN1.dgn Division: BRIDGE Username: Brian.J.Nichols Date:1/20/2016

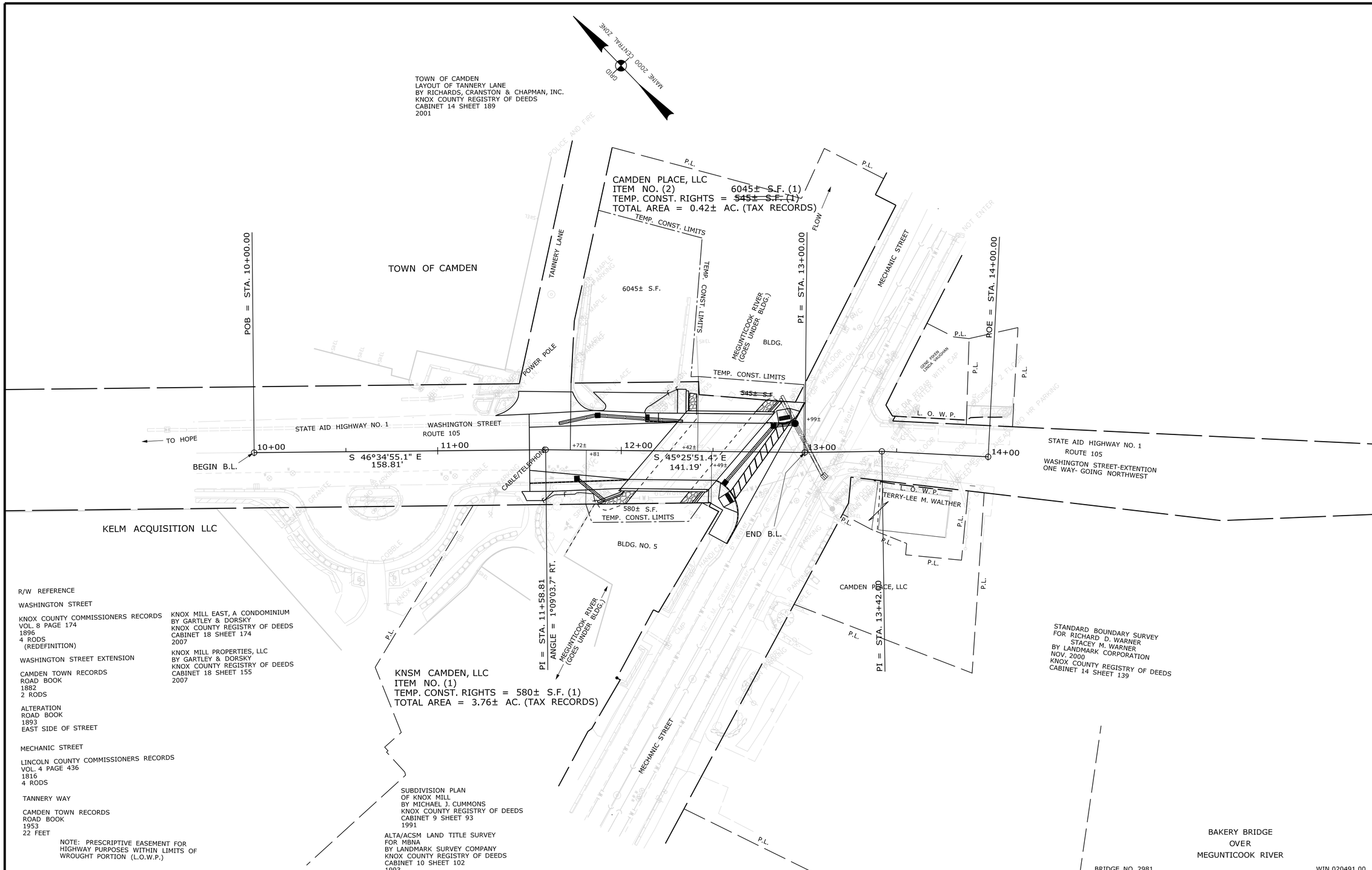

R/W REFERENCE

WASHINGTON STREET

KNOX COUNTY COMMISSIONERS RECORDS
VOL. 8 PAGE 174
1896
4 RODS
(REDEFINITION)

WASHINGTON STREET EXTENSION

CAMDEN TOWN RECORDS
ROAD BOOK
1882
2 RODS

ALTERATION
ROAD BOOK
1893
EAST SIDE OF STREET

MECHANIC STREET

LINCOLN COUNTY COMMISSIONERS RECORDS
VOL. 4 PAGE 436
1816
4 RODS

TANNERY WAY

CAMDEN TOWN RECORDS
ROAD BOOK
1953
22 FEET

NOTE: PRESCRIPTIVE EASEMENT FOR HIGHWAY PURPOSES WITHIN LIMITS OF WROUGHT PORTION (L.O.W.P.)

KNOX MILL EAST, A CONDOMINIUM
BY GARTLEY & DORSKY
KNOX COUNTY REGISTRY OF DEEDS
CABINET 18 SHEET 174
2007

KNOX MILL PROPERTIES, LLC
BY GARTLEY & DORSKY
KNOX COUNTY REGISTRY OF DEEDS
CABINET 18 SHEET 155
2007

SUBDIVISION PLAN
OF KNOX MILL
BY MICHAEL J. CUMMONS
KNOX COUNTY REGISTRY OF DEEDS
CABINET 9 SHEET 93
1991

ALTA/ACSM LAND TITLE SURVEY
FOR MBNA
BY LANDMARK SURVEY COMPANY
KNOX COUNTY REGISTRY OF DEEDS
CABINET 10 SHEET 102
1993

SYMBOLS

- IP or IPF (IRON PIPE or PIN FOUND)
- S.T. (SEPTIC TANK)
- BM (ROW MONUMENT)
- BM (TRAVERSE POINT)
- WELL
- BREAKING LIMIT LINE
- CONSTRUCTION LIMIT LINE
- PROPERTY LINE
- LIMITS OF WROUGHT PORTION (L.O.W.P.)
- EXISTING RIGHT OF WAY
- NEW RIGHT OF WAY
- NEW ROW WITHIN EXIST. ROW
- CONTROL OF ACCESS
- WATER LINE
- GAS LINE
- ELECTRIC LINE
- TELEPHONE LINE
- SEWER LINE

ITEM	TECH	CHECKED
BASE MAP		
EXIST. R/W	D.W.B.	
PROP. LINES	D.W.B.	
AREAS	D.W.B.	P.N.S.

STATE OF MAINE
DEPARTMENT OF TRANSPORTATION
16 STATE HOUSE STATION - AUGUSTA, ME 04333-0016
CAMDEN
RIGHT OF WAY MAP

REVISIONS

NO.	DATE	DESCRIPTION	BY
1	12-28-15	ADDED MORE TEMP. RIGHT AREA TO ITEM NO. (2)	D.W.B.

PLAN FILED IN PLAN BOOK PAGE COUNTY RECORD

NO.	GRANTOR	INSTRUMENT	DATE	BOOK	PAGE
		COND.	1/11/16	4998	155

DAVID BERNHARDT
COMMISSIONER
JOYCE NOEL TAYLOR
CHIEF ENGINEER

DATE

STATE AID HIGHWAY NO. 1
ROUTE 105-WASHINGTON STREET
CAMDEN KNOX COUNTY
FEDERAL AID PROJECT NO. STP-2049(100)

SEPTEMBER 2015 | RIGHT-OF-WAY MAP | D.O.T. FILE NO. 7-163
SCALE 1" = 25' | SHEET 1 OF 1

SHEET NUMBER
26
OF 26

LAST SAVED BY: MRL 12/23/2015 8:37 AM

G:\DWGS\ME\CAMDEN\10628J-BAKERYBRIDGESEWERREPLACEMENT\CIV\10628JC01.DWG | C-1 10628JC01 | 1:4.56 | ---- | 1/12/2016 9:56:45 AM | MRL

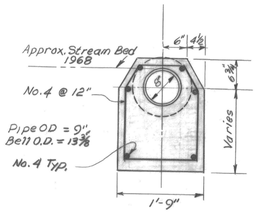

SECTION C/20
Scale: ¾" = 1'-0"

NOTE:
CONSTRUCT CONCRETE ENCASEMENT PER THIS DETAIL. MATCH ALL ELEVATIONS OF EXISTING PIPE AND ENCASEMENT.

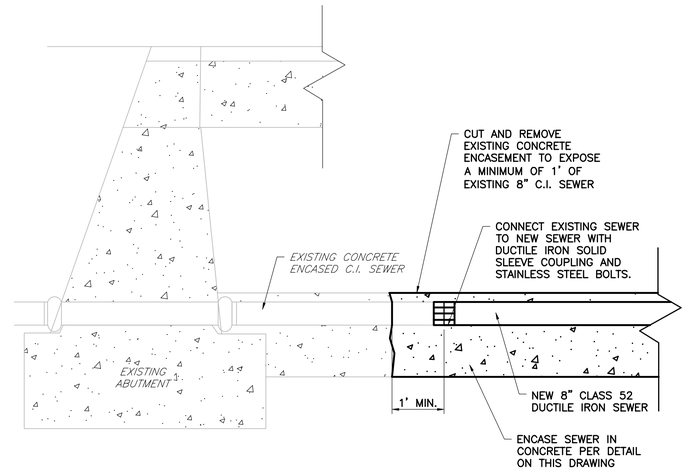

SEWER CONNECTION DETAIL

SCALE: NTS

REMOVAL OF CENTER PIPE:

IF CONTRACTOR CAN RETAIN CENTER PIER AND FOUNDATION IN THE AREA OF EXISTING SEWER, WITHIN LIMITS ACCEPTABLE TO MDOT (MAX. 2' ABOVE EXISTING SEWER PIPE), WITHOUT CAUSING DAMAGE TO THE EXISTING SEWER AND CONCRETE ENCASEMENT, IT WILL NOT BE NECESSARY TO REMOVE AND REPLACE EXISTING SEWER AND ENCASEMENT. COORDINATE SCOPE OF DEMOLITION OF CENTER PIER WITH THE MDOT AND TOWN OF CAMDEN TO DETERMINE IF EXISTING SEWER CAN REMAIN DURING THIS PROJECT. BYPASS PUMPING AROUND THE EXISTING SEWER IS STILL REQUIRED IN CASE THE EXISTING SEWER IS DAMAGED DURING CONSTRUCTION.

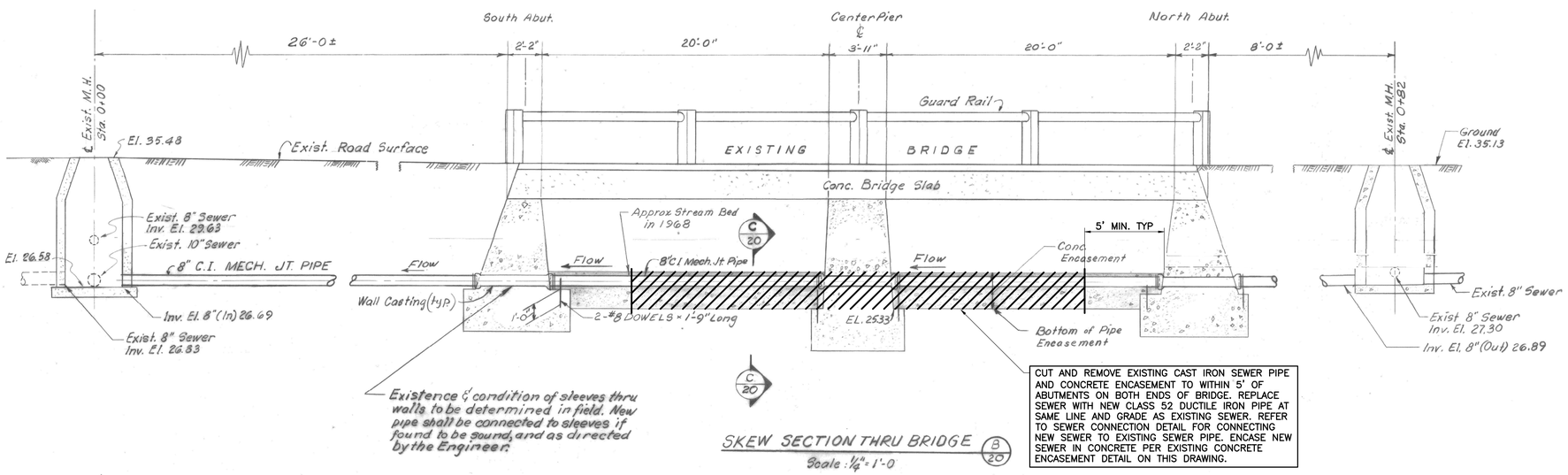

SKEW SECTION THRU BRIDGE B/20
Scale: ¼" = 1'-0

CUT AND REMOVE EXISTING CAST IRON SEWER PIPE AND CONCRETE ENCASEMENT TO WITHIN 5' OF ABUTMENTS ON BOTH ENDS OF BRIDGE. REPLACE SEWER WITH NEW CLASS 52 DUCTILE IRON PIPE AT SAME LINE AND GRADE AS EXISTING SEWER. REFER TO SEWER CONNECTION DETAIL FOR CONNECTING NEW SEWER TO EXISTING SEWER PIPE. ENCASE NEW SEWER IN CONCRETE PER EXISTING CONCRETE ENCASEMENT DETAIL ON THIS DRAWING.

NOTE:

EXISTING IMAGES ON THIS DRAWING WERE TAKEN FROM RECORD DRAWINGS TITLED "ADDITIONS TO SEWER SYSTEM" BY GREEN ENGINEERING AFFILIATES DATED 9-15-1967.

NO	SUBMISSIONS/REVISIONS	APP'D	DATE
	ISSUED FOR BID	KRO	1/16
1			
2			
3			
4			
5			
6			

DESIGNED BY: KRO
CAD COORD: MRL
CAD: MRL
CHECKED BY: KRO
DATE: 1-12-16
APPROVED BY: KRO
DATE: 1-12-16
PROJECT NO: 10628J

STATE OF MAINE
KEVIN R. OBERY
No. 6298
LICENSED
PROFESSIONAL ENGINEER

WRIGHT-PIERCE
Engineering a Better Environment
Offices Throughout New England
888.621.8156 | www.wright-pierce.com

TOWN OF CAMDEN
BAKERY BRIDGE SEWER REPLACEMENT
CAMDEN, MAINE

SEWER REPLACEMENT DETAILS

DRAWING
C-1