STATE OF MAINE
DEPARTMENT OF TRANSPORTATION

CLINTON
KENNEBEC COUNTY
CAIN BRIDGE
OVER
TWELVE MILE BROOK
ROUTES 11 & 100
STP-2048(000)
PROJECT LENGTH 0.05 mi.
BRIDGE NO. 2117

LIST OF DRAWINGS

Title Sheet 1
Quantities and Notes 2
General Plan 3
Profile 4
Boring Location Plan & Interpretive Subsurface Profile 5
Boring Logs 6
Highway Approach Cross Sections ..... 7 - 13
Abutment No. 1 ..... 14 - 16
Abutment No. 2 ..... 17 - 19
Precast 1st Stage Voided Slab Plan 20
Precast 2nd Stage Voided Slab Plan 21
Precast Voided Slab Sections 22
Superstructure 23
Reinforcing Steel Schedule 24
Staged Construction Plans 25
Wide Load Detour Plan 26
Right of Way Map 27

SPECIFICATIONS

Design: Load and Resistance Factor Design per AASHTO LRFD Bridge Design Specifications, Seventh Edition 2014 with 2015 interims.

DESIGN LOADING

Live Load ..... HL - 93 Modified for Strength 1

TRAFFIC DATA

Current (2013) AADT 5660
Future (2033) AADT 6790
DHV - % of AADT 11
Design Hour Volume 747
Heavy Trucks (% of AADT) 8
Heavy Trucks (% of DHV) 6
Directional Distribution (% of DHV) 59
18 kip Equivalent P 2.0 345
18 kip Equivalent P 2.5 329

HYDROLOGIC DATA

Drainage Area ..... 22.12 sq mi
Headwater Elevation (Q1.1) ..... 107.06 ft
Discharge Velocity (Q1.1) ..... 3.42 fps
Headwater Elevation (Q25) ..... 111.28 ft
Design Discharge (Q50) 2544.4cfs
Headwater Elevation (Q50) ..... 112.03 ft
Discharge Velocity (Q50) ..... 9.54 fps
Check Discharge (Q100) ..... 2955.2 cfs
Headwater Elevation (Q100) ..... 112.86 ft
Discharge Velocity (Q100) ..... 10.36 fps

MATERIALS

Concrete:
- Barriers, Curbs, Sidewalks & Transition Barriers ..... Class "LP"
- Precast ..... Class "P"
- All Other ..... Class "A"

Reinforcing Steel (Standard) ..... ASTM A 615/A 615M, Grade 60
Reinforcing Steel (Epoxy Coated) ..... ASTM A 775/A 775M, Grade 60
Prestressing Strands ..... AASHTO 203 (ASTM A 416), Grade 270, Low Relaxation

BASIC DESIGN STRESSES

Concrete ..... f 'c = 4,000 psi
Precast Concrete ..... f 'c = 6,500 psi
f 'ci = 5,000 psi
Reinforcing Steel ..... f y = 60,000 psi
Prestressing Strand ..... F μ = 270,000 psi

UTILITIES

Fairpoint Communications
Central Maine Power Company
Time Warner Cable, Inc.
Clinton Water District

MAINTENANCE OF TRAFFIC

Maintain one 11'-0" wide lane of alternating one-way traffic using staged construction and temporary traffic signals.

PROJECT LOCATION:	On State Route 100 & Route 11 (Main Street) .02 miles East of the intersection with Route 16 (Baker Street/Hinkley Road). Lat. 44° 38' 11" N Long. 69° 30' 18" W
PROGRAM AREA:	Bridge
OUTLINE OF WORK:	Bridge replacement.

WIN 20480.00

STP-2048(000)

STATE OF MAINE
DEPARTMENT OF TRANSPORTATION
APPROVED
COMMISSIONER: DATE 1/4/16
CHIEF ENGINEER: 1-4-16

STATE OF MAINE Michael Harry Wight 8089 LICENSED PROFESSIONAL ENGINEER

Michael Wight
SIGNATURE
8089
P.E. NUMBER
1/4/2016
DATE

PROJECT INFORMATION
PROGRAM: BRIDGE
PROJECT MANAGER: M. WIGHT
DESIGNER: J. HASBROUCK
CONSULTANT
PROJECT RESIDENT
CONTRACTOR
PROJECT COMPLETION DATE

CLINTON
CAIN BRIDGE
TITLE SHEET

SHEET NUMBER
1
OF 27

Filename:\00\BRIDGE\MSTA\001_Title.dgn Division: BRIDGE Username: David.Sullivan Date:12/28/2015

ESTIMATED QUANTITIES			
ITEM NO.	DESCRIPTION	QUANTITY	UNIT
201.23	REMOVING SINGLE TREE TOP ONLY	1	EA
201.24	REMOVING STUMP	1	EA
202.19	REMOVING EXISTING BRIDGE (490 CY)	1	LS
202.202	REMOVING PAVEMENT SURFACE	310	SY
203.20	COMMON EXCAVATION	400	CY
203.24	COMMON BORROW	10	CY
203.25	GRANULAR BORROW	270	CY
206.082	STRUCTURAL EARTH EXCAVATION - MAJOR STRUCTURES	310	CY
304.10	AGGREGATE SUBBASE COURSE - GRAVEL	300	CY
403.208	HOT MIX ASPHALT 12.5 MM HMA SURFACE	100	T
403.209	HOT MIX ASPHALT 9.5 MM (SIDEWALKS, DRIVES, INCIDENTALS) INCIDENTALS)	40	T
403.211	HOT MIX ASPHALT (SHIMMING)	10	T
403.213	HOT MIX ASPHALT 12.5 MM BASE	190	T
409.15	BITUMINOUS TACK COAT - APPLIED	57	G
501.231	DYNAMIC LOADING TEST	2	EA
501.50	STEEL H-BEAM PILES 89 LBS/FT. DELIVERED	172	LF
501.501	STEEL H-BEAM PILES 89 LBS/FT. IN PLACE	172	LF
501.903	PILE TIPS - ROCK INJECTOR POINT	8	EA
501.92	PILE DRIVING EQUIPMENT MOBILIZATION	1	LS
502.219	STRUCTURAL CONCRETE, ABUTMENTS AND RETAINING WALLS (110 CY)	1	LS
502.261	STRUCTURAL CONCRETE ROADWAY & SIDEWALK SLAB ON CONCRETE BRIDGE (50 CY)	1	LS
502.31	STRUCTURAL CONCRETE APPROACH SLABS (22 CY)	1	LS
502.49	STRUCTURAL CONCRETE CURBS AND SIDEWALKS (21 CY)	1	LS
503.12	REINFORCING STEEL, FABRICATED AND DELIVERED	11430	LB
503.13	REINFORCING STEEL, PLACING	11430	LB
503.14	EPOXY-COATED REINFORCING STEEL, FABRICATED AND DELIVERED	4616	LB
503.15	EPOXY-COATED REINFORCING STEEL, PLACING	4616	LB
503.171	MECHANICAL / WELDED SPLICE (90 EA)	1	LS
507.0821	STEEL BRIDGE RAILING, 3 BAR (52 LF)	1	LS
507.0831	STEEL BRIDGE RAILING, 4 BAR (52 LF)	1	LS
508.14	HIGH PERFORMANCE WATERPROOFING MEMBRANE (240 SY)	1	LS
511.07	COFFERDAM: ABUTMENT No. 1	1	LS
511.07	COFFERDAM: ABUTMENT No. 2	1	LS
512.081	FRENCH DRAINS (80 LF)	1	LS
514.06	CURING BOX FOR CONCRETE CYLINDERS	1	EA
515.21	PROTECTIVE COATING FOR CONCRETE SURFACES (160 SY)	1	LS
524.301	TEMPORARY STRUCTURAL SUPPORT	1	LS
526.301	TEMPORARY CONCRETE BARRIER TYPE 1 (80 LF)	1	LS
526.34	PERMANENT CONCRETE TRANSITION BARRIER	4	EA
527.34	WORK ZONE CRASH CUSHIONS	4	UN
535.60	PRESTRESSED STRUCTURAL CONCRETE SLAB (120 CY)	1	LS
603.159	12 INCH CULVERT PIPE OPTION III	200	LF
604.092	CATCH BASIN TYPE BI-C	3	EA
604.18	ADJUSTING MANHOLE OR CATCH BASIN TO GRADE	1	EA
604.244	CATCH BASIN TYPE F4	2	EA
605.11	12 INCH UNDERDRAIN TYPE C	100	LF
606.1721	BRIDGE TRANSITION - TYPE 1	3	EA
606.231	GUARDRAIL TYPE 3C - 15 FOOT RADIUS AND LESS	50	LF
606.265	TERMINAL END - SINGLE RAIL - GALVANIZED STEEL	3	EA
606.353	REFLECTORIZED FLEXIBLE GUARDRAIL MARKER	8	EA
606.79	GUARDRAIL 350 FLARED TERMINAL	1	EA
608.45	CONSTRUCT SIDEWALK	35	SF
609.31	CURB TYPE 3	80	SY
609.38	RESET CURB TYPE 1	312	LF
610.08	PLAIN RIPRAP	20	LF
610.18	STONE DITCH PROTECTION	330	CY
613.319	EROSION CONTROL BLANKET	11	CY
615.07	LOAM	30	SY
618.14	SEEDING METHOD NUMBER 2	10	CY
619.1201	MULCH	2	UN
619.1401	EROSION CONTROL MIX	2	UN
620.58	EROSION CONTROL GEOTEXTILE	20	CY
627.733	4" WHITE OR YELLOW PAINTED PAVEMENT MARKING LINE	440	SY
627.76	TEMPORARY PAVEMENT MARKING LINE, WHITE OR YELLOW	1240	LF
627.77	REMOVING PAVEMENT MARKINGS	1	LS
629.05	HAND LABOR, STRAIGHT TIME	415	SF
631.12	ALL PURPOSE EXCAVATOR (INCLUDING OPERATOR)	40	HR
631.15	ROLLER, EARTH AND BASE COURSE (INCLUDING OPERATOR)	40	HR
631.172	TRUCK - LARGE (INCLUDING OPERATOR)	20	HR
639.19	FIELD OFFICE TYPE B	20	HR
643.72	TEMPORARY TRAFFIC SIGNAL	1	EA
652.312	TYPE III BARRICADE	1	LS
652.33	DRUM	4	EA
652.34	CONE	40	EA
652.35	CONSTRUCTION SIGNS	80	EA
652.361	MAINTENANCE OF TRAFFIC CONTROL DEVICES	200	SF
652.38	FLAGGER (180 CD)	1	LS
652.41	PORTABLE CHANGEABLE MESSAGE SIGN	250	HR
		3	EA

ESTIMATED QUANTITIES			
ITEM NO.	DESCRIPTION	QUANTITY	UNIT
656.75	TEMPORARY SOIL EROSION AND WATER POLLUTION CONTROL	1	LS
659.10	MOBILIZATION	1	LS

GENERAL CONSTRUCTION NOTES

1. For easements, construction limits and right of way lines, refer to Right of Way Map.

2. The clearing limits as shown on the plans are approximate. The exact limits will be established in the field by the Resident. Payment for clearing will be considered incidental to Contract items.

3. All utility facilities shall be adjusted by the respective utilities unless otherwise noted.

4. Do not excavate for Aggregate Subbase Course where existing material is suitable as determined by the Resident.

5. In areas where the Resident directs the Contractor not to excavate to the subgrade line shown on the plans, payment for removing existing pavement, grubbing, shaping, ditching, and compacting the existing subbase and layers of new subbase 6 inches or less thick will be made under appropriate equipment rental items.

6. All embankment material, except as otherwise shown, placed below EL. 107.06 shall be Granular Borrow meeting the requirements of Subsection 703.19, Material for Underwater Backfill.

7. Place riprap on sideslopes up to EL. 110.5'±.

8. Construct the riprap shelf at Abutment No. 1 at EL. 112.0'± and Abutment No. 2 at EL.110.5'±.

9. Place loam 2 inches deep on all new or reconstructed sideslopes or as directed by the Resident.

10. Erosion Control Mix may be substituted in those areas normally receiving loam and seed as directed by the Resident. Placement shall be in accordance with Standard Specifications Section 619, Mulch. Payment will be made under Item No. 619.1401, Erosion Control Mix.

11. Place a 24-in. wide strip of Temporary Erosion Control Blanket on the sideslopes along the top of the riprap and behind the wingwalls.

12. An NCHRP350 compliant guardrail end treatment shall be installed concurrently with the placement of each section of beam guardrail.

13. Extended-use Erosion Control Blanket, seeded gutters, riprap downspouts, and other gutters lined with Stone Ditch Protection shall be constructed after paving and shoulder work is completed, where it is apparent that runoff will cause continual erosion. Payment will be made under the appropriate Contract items.

14. Protective Coating for Concrete Surfaces shall be applied to the following areas:

All exposed surfaces of concrete curbs and sidewalks.
Fascias down to the drip notch.
All exposed surfaces of Concrete Transition Barriers.
Top of abutment backwalls and to one foot below the top of backwalls on the back side.

15. Project information referred to below may be accessed at the following MaineDOT web address: http://www.maine.gov/mdot/contractors/

16. The existing bridge plans may be accessed at the MaineDOT web address. The plans are reproductions of the original drawings as prepared for the construction of the bridge. It is very unlikely that the plans will show any construction field changes or any alterations which may have been made to the bridge during its life span.

17. The hydrologic report of the bridge site may be accessed at the MaineDOT web address. The hydrologic report is based on MaineDOT's interpretation of the information obtained for the subject site. No assurance is given that the information or the conclusions of the report will be representative of actual conditions at the time of construction.

18. The project geotechnical report titled: GEOTECHNICAL DESIGN REPORT for the Replacement of : CAIN BRIDGE OVER TWELVE MILE BROOK, CLINTON, MAINE, Soils Report No. 2015-20, July 30, 2015 may be accessed at the MaineDOT web address.

19. Geotechnical information furnished or referred to in this plan set is for the use of the Bidders and the Contractor. No assurance is given that the information or interpretations will be representative of actual subsurface conditions at the construction site. MaineDOT will not be responsible for the Bidders' or Contractor's interpretations of, or conclusions drawn from, the geotechnical information. The boring logs contained in the plan set present factual and interpretive subsurface information collected at discrete locations. Data provided may not be representative of the subsurface conditions between the boring locations.

20. Quantities included for pay items measured and paid for by Lump Sum are estimated quantities and are provided by MaineDOT for informational purposes only. Lump Sum pay items will be paid for at the Contract Bid amount, with no addition or reduction in payment to the Contractor if the actual final quantities are different from the MaineDOT provided estimated quantities, except as follows:

a. If a Lump Sum pay item is eliminated, the requirements of Standard Specifications Section 109.2, Elimination of Items, will take precedence.

b. If other Contract Documents specifically allow a change in payment for a Lump Sum pay item, those requirements will be followed.

c. If a design change results in changes to estimated quantities for Lump Sum pay items, price adjustments will be made in accordance with Standard Specifications Section 109.7, Equitable Adjustments to Compensation.

21. The Contractor shall submit a Bridge Demolition Plan to the Resident at least 10 business days prior to the start of demolition work. The plan shall outline the methods and equipment to be used to remove and dispose of all materials included in the existing bridge. No work related to the removal of the bridge shall be undertaken by the Contractor until MaineDOT has reviewed the Bridge Demolition Plan for appropriateness and completeness. Payment for all work necessary for developing, submitting and finalizing the Demolition Plan will be considered incidental to the bridge removal pay item.

22. Access to the fire hydrant at approximately Sta. 15+41.00 shall not be blocked when the Contractor does not have personnel on site.

STATE OF MAINE
DEPARTMENT OF TRANSPORTATION

STP-2048(000)

WIN 20480.00

BRIDGE NO. 2117

BRIDGE PLANS

		BY	DATE
PROJ. MANAGER	M. WIGHT		
DESIGN-DETAILED	J. HASBROUCK	D. SULLIVAN	DEC 2015
CHECKED-REVIEWED	B. REEVES	W. ROHMAN	DEC 2015
DESIGN2-DETAILED2	L. KRUSINSKI	T. WHITE	JUN 2014
DESIGN3-DETAILED3	----	W. ROHMAN	----
REVISIONS 1	----	----	----
REVISIONS 2	----	----	----
REVISIONS 3	----	----	----
REVISIONS 4	----	----	----
FIELD CHANGES	----	----	----

SIGNATURE

P.E. NUMBER

DATE

CAIN BRIDGE
TWELVE MILE BROOK
CLINTON KENNEBEC COUNTY

ESTIMATED QUANTITIES

SHEET NUMBER

2

OF 27

Filename: ...\BRIDGE\MSTA\002_Estimate.dgn Division: BRIDGE Username: David.Sullivan Date:1/7/2016

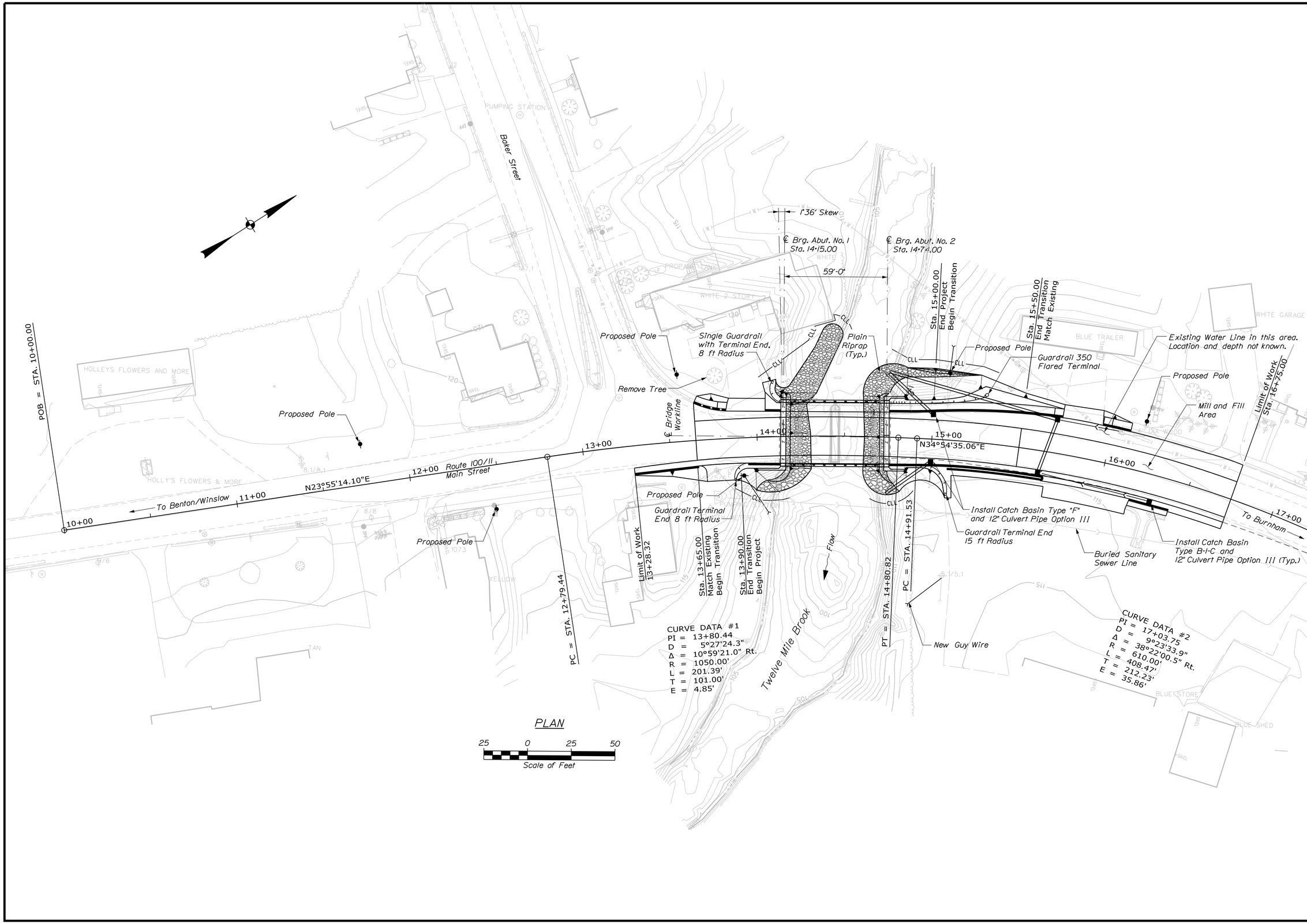

STATE OF MAINE
DEPARTMENT OF TRANSPORTATION

STP-2048(000)

PIN 20480.00

BRIDGE NO. 2117

BRIDGE PLANS

	BY	DATE
PROJ. MANAGER	M. WIGHT	
DESIGN-DETAILED	J. HASBROUCK	
CHECKED-REVIEWED	B. REEVES	
DESIGN2-DETAILED2	L. KRUSINSKI	
DESIGN3-DETAILED3	T. WHITE	
REVISIONS 1	W. ROHMAN	
REVISIONS 2		
REVISIONS 3		
REVISIONS 4		
FIELD CHANGES		

SIGNATURE DEC 2015

P.E. NUMBER JUN 2014

DATE

CAIN BRIDGE
TWELVE MILE BROOK
CLINTON KENNEBEC COUNTY

GENERAL PLANS

SHEET NUMBER

3

OF 27

Filename: ...\00\BRIDGE\MSTA\003_BOPlan1.dgn Division: BRIDGE Username: David.Sullivan Date:1/7/2016

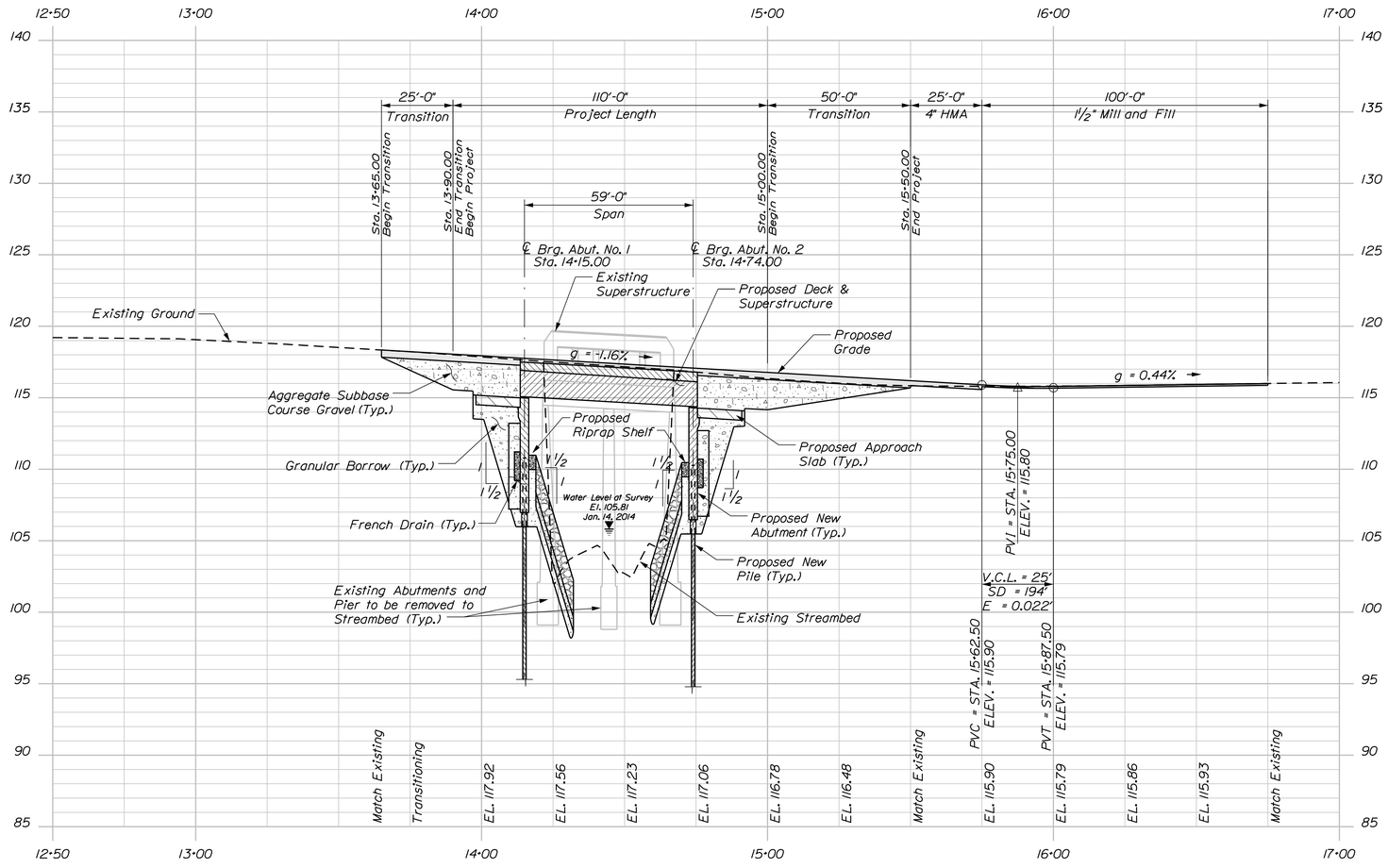

PROFILE

25 0 25 50

Scale of Feet

Filename: ...\00\BRIDGE\MSTA\004_Profile.dgn Division: BRIDGE Username: David.Sullivan Date:1/7/2016

STATE OF MAINE
DEPARTMENT OF TRANSPORTATION

STP-2048(000)

WIN 20480.00

BRIDGE NO. 2117

BRIDGE PLANS

PROJ. MANAGER	M. WIGHT	BY	DATE
DESIGN-DETAILED	J. HASBROUCK	D. SULLIVAN	
CHECKED-REVIEWED	B. REEVES	W. ROHMAN	DEC 2015
DESIGN2-DETAILED2	L. KRUSINSKI	T. WHITE	JUN 2014
DESIGN3-DETAILED3	-----	W. ROHMAN	-----
REVISIONS 1	-----		-----
REVISIONS 2	-----		-----
REVISIONS 3	-----		-----
REVISIONS 4	-----		-----
FIELD CHANGES	-----		-----

SIGNATURE

P.E. NUMBER

DATE

CAIN BRIDGE
TWELVE MILE BROOK
CLINTON KENNEBEC COUNTY

PROFILE

SHEET NUMBER

4

OF 27

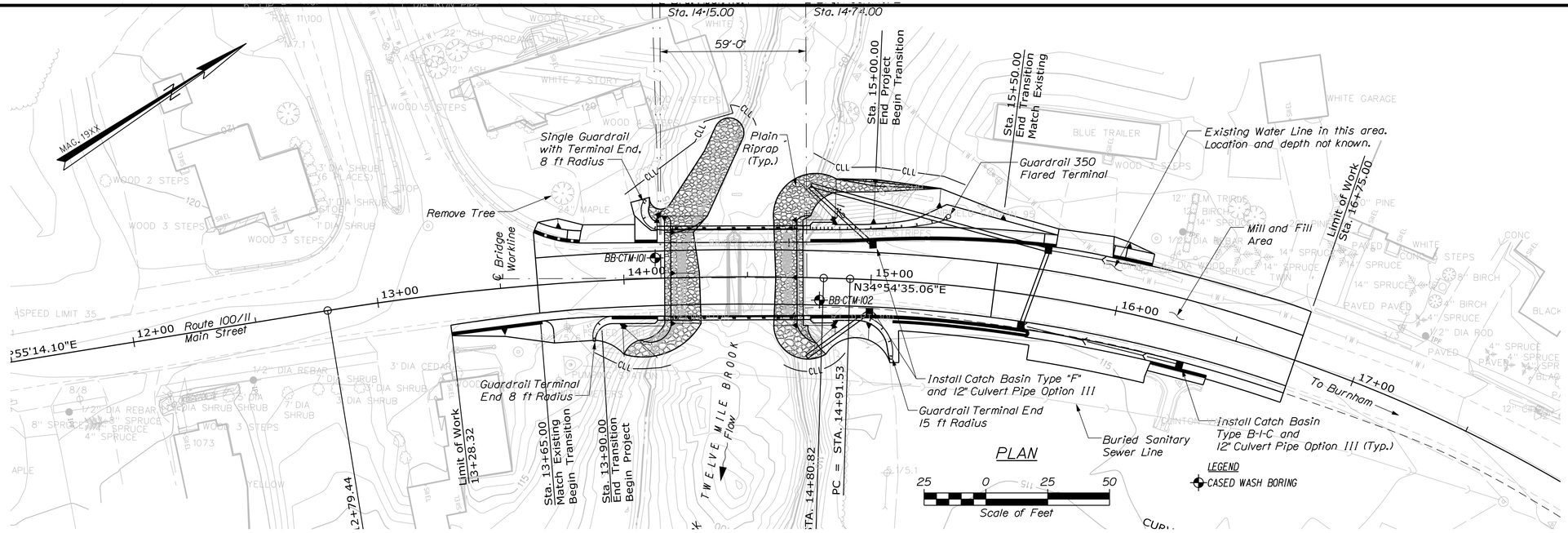

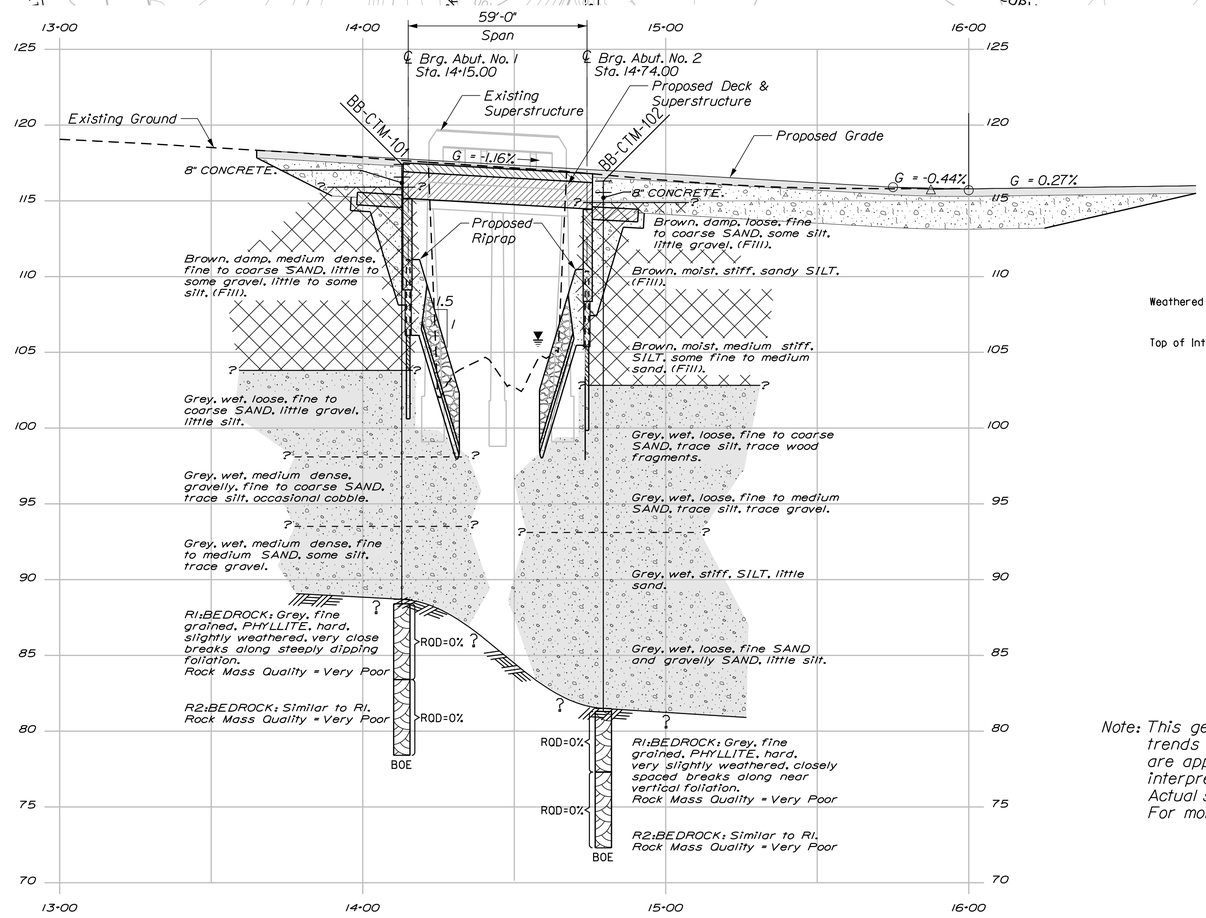

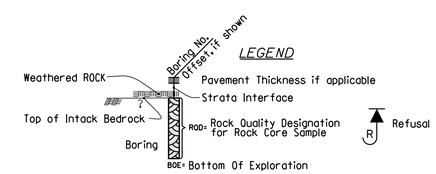

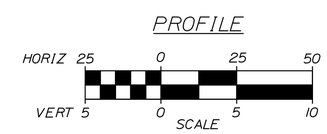

Note: This generalized interpretive soil profile is intended to convey trends in subsurface conditions. The boundaries between strata are approximate and idealized, and have been developed by interpretations of widely spaced explorations and samples. Actual soil transitions may vary and are probably more erratic. For more specific information refer to the exploration logs.

STATE OF MAINE
DEPARTMENT OF TRANSPORTATION

STP-2048(000)

WIN 20480.00

BRIDGE NO. 2117

BRIDGE PLANS

PROJ. MANAGER		BY	DATE
DESIGN-DETAILED	HASBROUCK	D.SULLIVAN	
CHECKED-REVIEWED			
DESIGN2-DETAILED2	L.KRUSINSKI	T.WHITE	JUN 2014
DESIGN3-DETAILED3		W.ROHMAN	
REVISIONS 1			
REVISIONS 2			
REVISIONS 3			
REVISIONS 4			
FIELD CHANGES			

SIGNATURE

P.E. NUMBER

DATE

CAIN BRIDGE
TWELVE MILE BROOK
CLINTON KENNEBEC COUNTY

BORING LOCATION PLAN & INTERPRETIVE SUBSURFACE PROFILE

SHEET NUMBER
5
OF 27

Filename: ...\GEOTECH\MSTA\006_BLP&ISP1.dgn Division: BRIDGE Username: David.Sullivan Date:1/7/2016

Filename: ...\MSTA\007_BORING LOGS1.dgn Division: BRIDGE Username: David.Sullivan Date:1/7/2016

Maine Department of Transportation

Soil/Rock Exploration Log
US CUSTOMARY UNITS

Project: Cain Bridge #2117 carries Routes 11 & 100 over Twelve Mile Stream
Location: Clinton, Maine

Boring No.: BB-CTM-101
WIN: 20480.00

Driller:	MaineDOT	Elevation (ft.)	117.4	Auger ID/OD:	5" Solid Stem
Operator:	Giles/Daggett/Giles	Datum:	NAVD88	Sampler:	Standard Split Spoon
Logged By:	B. Wilder	Rig Type:	CME 45C	Hammer Wt./Fall:	140#/30"
Date Start/Finish:	6/24/2014; 07:30-13:00	Drilling Method:	Cased Wash Boring	Core Barrel:	NQ-2"
Boring Location:	14+12.9, 8.3 ft Lt.	Casing ID/OD:	NW	Water Level*:	None Observed
Hammer Efficiency Factor: 0.867		Hammer Type:	Automatic ☒ Hydraulic ☐ Rope & Cathead ☐		

Definitions:
D = Split Spoon Sample
MD = Unsuccessful Split Spoon Sample attempt
U = Thin Wall Tube Sample
MU = Unsuccessful Thin Wall Tube Sample attempt
V = Insitu Vane Shear Test, PP = Pocket Penetrometer
MV = Unsuccessful Insitu Vane Shear Test attempt
R = Rock Core Sample
SSA = Solid Stem Auger
HSA = Hollow Stem Auger
RC = Roller Cone
WOH = weight of 140lb. hammer
WOR/C = weight of rods or casing
WO1P = Weight of one person
S_u = Insitu Field Vane Shear Strength (psf)
T_v = Pocket Torvane Shear Strength (psf)
q_p = Unconfined Compressive Strength (ksf)
N-uncorrected = Raw field SPT N-value
Hammer Efficiency Factor = Annual Calibration Value
N_{60} = SPT N-uncorrected corrected for hammer efficiency
N_{60} = (Hammer Efficiency Factor/60%)*N-uncorrected
$S_{u(lab)}$ = Lab Vane Shear Strength (psf)
WC = water content, percent
LL = Liquid Limit
PL = Plastic Limit
PI = Plasticity Index
G = Grain Size Analysis
C = Consolidation Test

Sample Information

Depth (ft.)	Sample No.	Pen./Rec. (in.)	Sample Depth (ft.)	Blows (/6 in.) Shear Strength (psf) or RQD (%)	N-uncorrected	N_{60}	Casing Blows	Elevation (ft.)	Visual Description and Remarks	Laboratory Testing Results/ AASHTO and Unified Class
0							SSA	116.57	10" PAVEMENT.	
								115.90	8" CONCRETE. (0.83; 1.50)	
	1D	24/15	2.00 - 4.00	3/6/4/4	10	14			Brown, damp, medium dense, fine to coarse SAND, little gravel, little silt. (Fill).	
5	2D	24/16	5.00 - 7.00	2/4/4/4	8	12			Brown, damp, medium dense, fine to coarse SAND, some gravel, little silt. (Fill).	
10	3D	24/17	10.00 - 12.00	4/6/8/8	14	20			Brown, damp, medium dense, fine to coarse SAND, some silt, some gravel. (Fill).	GM243180 A-2-4, SM WC=14.5%
								103.80	13.60	
15	4D	24/18	15.00 - 17.00	2/3/4/5	7	10	10		Grey, wet, loose, fine to coarse SAND, little gravel, little silt.	GM243181 A-1-b, SM WC=15.4%
							9			
							17			
							16			
20	5D	24/13	20.00 - 22.00	5/6/7/7	13	19	17	97.90	19.50	
							27		Grey, wet, medium dense, gravelly, fine to coarse SAND, trace silt, occasional cobble.	
							38			
							36			
							35	93.40	24.00	
25	6D	24/18	25.00 - 27.00	3/3/5/6	8	12	21		Grey, wet, medium dense, fine to medium SAND, some silt, trace gravel.	GM243182 A-2-4, SM WC=22.4%
							25			
							31			
							@150		@150 blows for 0.7 ft.	
								88.70	28.70	
30	R1	60/60	29.00 - 34.00	RQD = 0%			NQ-2		Top of Bedrock at Elev. 88.7 ft. Roller Coned ahead to 29.0 ft bgs. R1:Bedrock: Grey, fine grained to aphanitic, PHYLLITE, hard, slightly weathered, breaks are steeply dipping along foliation, very close, tight to healed, some joints with silty or sandy infilling, calcite stringers, Waterville Formation. Rock Mass Quality = Very Poor. R1:Core Times (min:sec) 29.0-30.0 ft (6:15) 30.0-31.0 ft (6:48) 31.0-32.0 ft (6:34) 32.0-33.0 ft (7:05) 33.0-34.0 ft (8:30) 100% Recovery R2:Bedrock: Similar to R1, except 6 inch quartz vein in end of R2. Rock Mass Quality = Very Poor. R2:Core Times (min:sec) 34.0-35.0 ft (6:00) 35.0-36.0 ft (5:20) 36.0-37.0 ft (7:10) 37.0-38.0 ft (13:00) 38.0-39.0 ft (14:00) 100% Recovery Core Blocked	
35	R2	60/60	34.00 - 39.00	RQD = 0%						
								78.40	39.00	
40									Bottom of Exploration at 39.00 feet below ground surface.	
45										
50										

Remarks:

Stratification lines represent approximate boundaries between soil typest transitions may be gradual.

* Water level readings have been made at times and under conditions stated. Groundwater fluctuations may occur due to conditions other than those present at the time measurements were made.

Page 1 of 1

Boring No.: BB-CTM-101

Maine Department of Transportation

Soil/Rock Exploration Log
US CUSTOMARY UNITS

Project: Cain Bridge #2117 carries Routes 11 & 100 over Twelve Mile Stream
Location: Clinton, Maine

Boring No.: BB-CTM-102
WIN: 20480.00

Driller:	MaineDOT	Elevation (ft.)	116.3	Auger ID/OD:	5" Solid Stem
Operator:	Giles/Daggett/Giles	Datum:	NAVD88	Sampler:	Standard Split Spoon
Logged By:	B. Wilder	Rig Type:	CME 45C	Hammer Wt./Fall:	140#/30"
Date Start/Finish:	6/23/2014; 10:30-15:30	Drilling Method:	Cased Wash Boring	Core Barrel:	NQ-2"
Boring Location:	14+79.4, 8.9 ft Rt.	Casing ID/OD:	NW	Water Level*:	18.0 ft bgs.
Hammer Efficiency Factor: 0.867		Hammer Type:	Automatic ☒ Hydraulic ☐ Rope & Cathead ☐		

Definitions:
D = Split Spoon Sample
MD = Unsuccessful Split Spoon Sample attempt
U = Thin Wall Tube Sample
MU = Unsuccessful Thin Wall Tube Sample attempt
V = Insitu Vane Shear Test, PP = Pocket Penetrometer
MV = Unsuccessful Insitu Vane Shear Test attempt
R = Rock Core Sample
SSA = Solid Stem Auger
HSA = Hollow Stem Auger
RC = Roller Cone
WOH = weight of 140lb. hammer
WOR/C = weight of rods or casing
WO1P = Weight of one person
S_u = Insitu Field Vane Shear Strength (psf)
T_v = Pocket Torvane Shear Strength (psf)
q_p = Unconfined Compressive Strength (ksf)
N-uncorrected = Raw field SPT N-value
Hammer Efficiency Factor = Annual Calibration Value
N_{60} = SPT N-uncorrected corrected for hammer efficiency
N_{60} = (Hammer Efficiency Factor/60%)*N-uncorrected
$S_{u(lab)}$ = Lab Vane Shear Strength (psf)
WC = water content, percent
LL = Liquid Limit
PL = Plastic Limit
PI = Plasticity Index
G = Grain Size Analysis
C = Consolidation Test

Sample Information

Depth (ft.)	Sample No.	Pen./Rec. (in.)	Sample Depth (ft.)	Blows (/6 in.) Shear Strength (psf) or RQD (%)	N-uncorrected	N_{60}	Casing Blows	Elevation (ft.)	Visual Description and Remarks	Laboratory Testing Results/ AASHTO and Unified Class
0							SSA	115.55	9" PAVEMENT.	
								114.88	8" CONCRETE. (0.75; 1.42)	
	1D	24/16	2.00 - 4.00	4/3/4/4	7	10			Brown, damp, loose, fine to coarse SAND, some silt, little gravel. (Fill).	
5	2D	24/14	5.00 - 7.00	3/3/4/4	7	10			Brown, moist, stiff, sandy SILT, trace gravel. (Fill).	GM243183 A-4, ML WC=13.1%
10	3D	24/13	10.00 - 12.00	2/2/2/2	4	6			Brown, moist, medium stiff, SILT, some fine to medium sand. (Fill).	
								102.80	13.50	
15	4D	24/16	15.00 - 17.00	1/2/2/3	4	6	12		Grey, wet, loose, fine to coarse SAND, trace silt, trace wood fragments.	
							11			
							16			
							18			
							17			
20	5D	24/14	20.00 - 22.00	2/2/2/4	4	6	7		Grey, wet, loose, fine to medium SAND, trace silt, trace gravel.	GM243184 A-3, SP-SM WC=22.3%
							11			
							14			
							15	92.80	23.50	
							21			
25	6D	24/13	25.00 - 27.00	5/3/3/4	6	9	10		Grey, wet, stiff, SILT, little sand.	GM243185 A-4, ML WC=31.3% Non-Plastic
							15			
							23			
							27			
							29			
30	7D/A	24/18	30.00 - 32.00	2/2/4/7	6	9	21		7D (30.0-31.5 ft) Grey, wet, loose, fine SAND.	
							31			
							36		7D/A (31.5-32.0 ft) Grey, wet, loose, gravelly, fine to coarse SAND, little silt.	
							127			
							@300		@300 blows for 0.8 ft.	
35								81.50	34.80	
	R1	48/46	35.00 - 39.00	RQD = 0%			NQ-2		Top of Bedrock at Elev. 81.5 ft. Roller Coned ahead to 35.0 ft bgs. R1:Bedrock: Grey, fine grained, PHYLLITE, hard, very slightly weathered, breaks along near vertical foliation, very close, tight, a few surfaces oxidized/discolored, Waterville Formation. Rock Mass Quality = Very Poor. R1:Core Times 5:38) 36.0-37.0 ft (4:33) 37.0-38.0 ft (4:20) 38.0-39.0 ft (6:00) 100% Recovery Core Blocked R2: Bedrock: Similar to R1. Rock Mass Quality = Very Poor. R2:Core Times (min:sec) 39.0-40.0 ft (7:35) 40.0-41.0 ft (5:50) 41.0-42.0 ft (14:00) 42.0-43.0 ft (6:33) 43.0-44.0 ft (6:30) 30% Recovery	
40	R2	60/18	39.00 - 44.00	RQD = 0%						
								72.30	44.00	
45									Bottom of Exploration at 44.00 feet below ground surface.	
50										

Remarks:

Stratification lines represent approximate boundaries between soil typest transitions may be gradual.

* Water level readings have been made at times and under conditions stated. Groundwater fluctuations may occur due to conditions other than those present at the time measurements were made.

Page 1 of 1

Boring No.: BB-CTM-102

STATE OF MAINE
DEPARTMENT OF TRANSPORTATION

STP-2048(000)

WIN 20480.00

BRIDGE NO. 2117

BRIDGE PLANS

		BY	DATE
PROJ. MANAGER			
DESIGN-DETAILED	HASBROUCK	D.SULLIVAN	
CHECKED-REVIEWED			
DESIGN2-DETAILED2	L.KRUSINSKI	T.WHITE	JUN 2014
DESIGN3-DETAILED3			
REVISIONS 1			
REVISIONS 2			
REVISIONS 3			
REVISIONS 4			
FIELD CHANGES			

SIGNATURE

P.E. NUMBER

DATE

CAIN BRIDGE
TWELVE MILE BROOK
CLINTON KENNEBEC COUNTY

BORING LOGS

SHEET NUMBER
6
OF 27

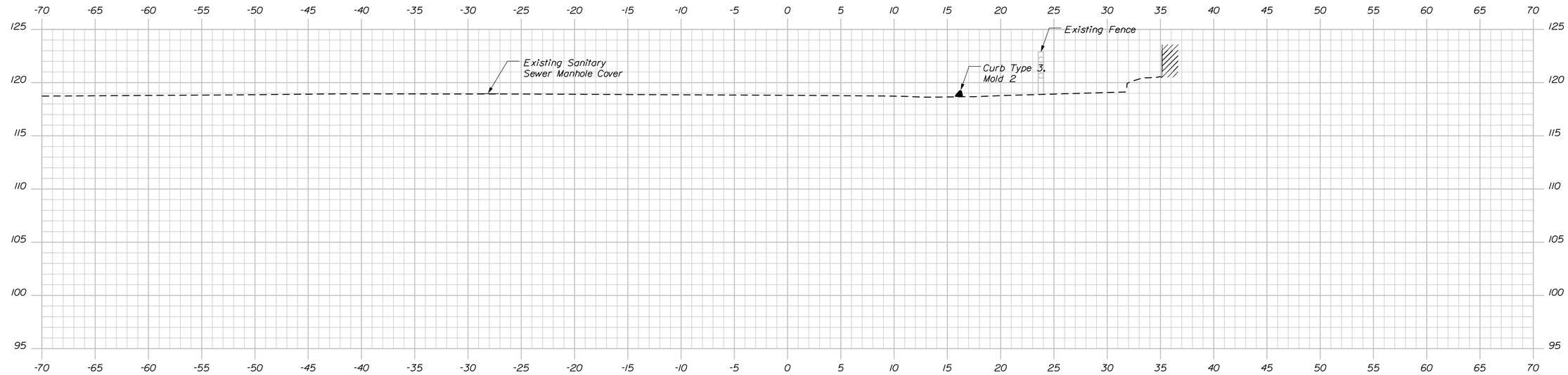

Proposed Pole
Sta. 11+74.68, 22.00 ft. Lt.

13+25.00

Sta. 13+28.32, 15.73 ft. Rt. to Sta. 13+57.47, 14.96 ft. Rt.
Install 30 ft. Curb Type 3, Mold 2

Proposed Pole
Sta. 12+46.25, 24.00 ft. Rt.

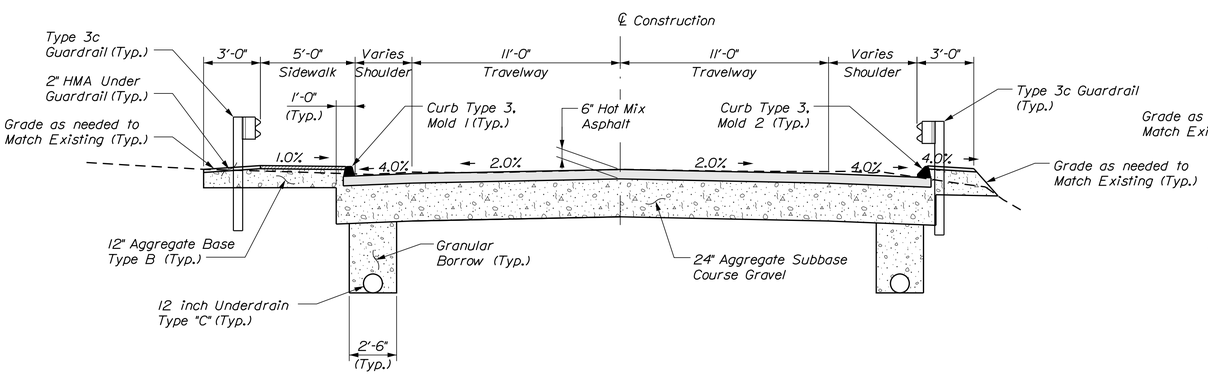

TYPICAL APPROACH SECTION

Normal Crown with Guardrail

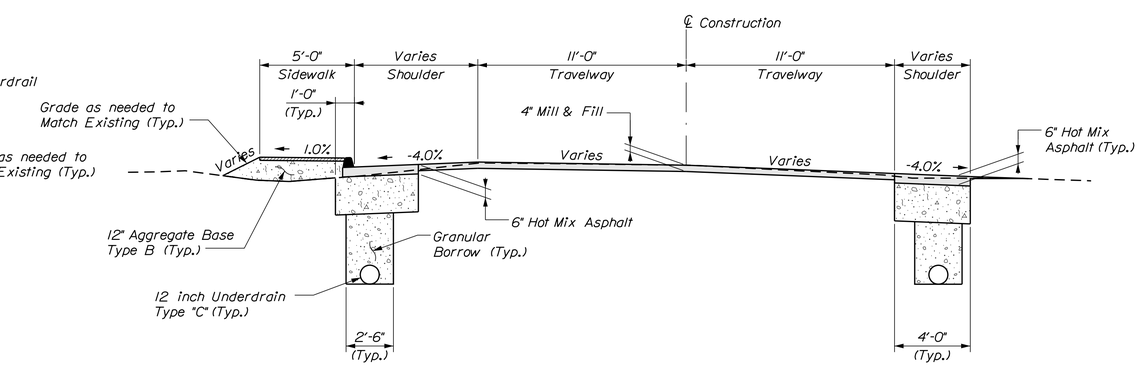

TYPICAL APPROACH SECTION

Superelevation w/out Guardrail; Mill and Fill Section

STATE OF MAINE
DEPARTMENT OF TRANSPORTATION

STP-2048(000)

WIN
20480.00

BRIDGE NO. 2117

BRIDGE PLANS

PROJ. MANAGER	M. WIGHT	BY	DATE
DESIGN-DETAILED	J. HASBROUCK	D. SULLIVAN	DEC 2015
CHECKED-REVIEWED	B. REEVES	W. ROHMAN	DEC 2015
DESIGN2-DETAILED2	L. KRUSINSKI	T. WHITE	JUN 2014
DESIGN3-DETAILED3	-----	W. ROHMAN	-----
REVISIONS 1	-----	-----	-----
REVISIONS 2	-----	-----	-----
REVISIONS 3	-----	-----	-----
REVISIONS 4	-----	-----	-----
FIELD CHANGES	-----	-----	-----

SIGNATURE

P.E. NUMBER

DATE

CAIN BRIDGE
TWELVE MILE BROOK
CLINTON KENNEBEC COUNTY

CROSS SECTIONS

SHEET NUMBER

7

OF 27

Sta. 13+25.00

Filename: ...\MSTA\007_XSECT_13+25_001.dgn Division: BRIDGE Username: David.Sullivan Date:1/7/2016

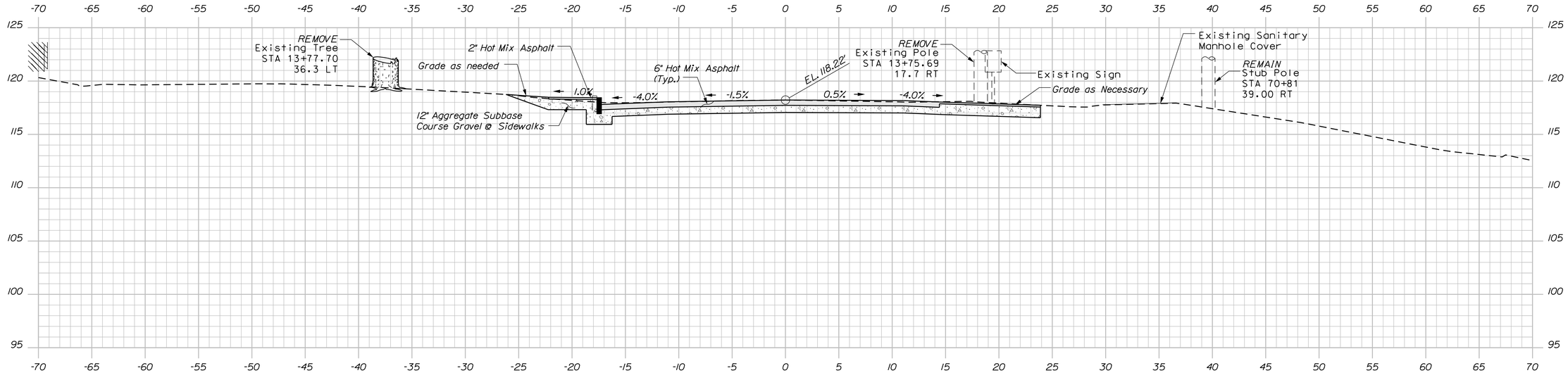

Sta. 13+65.00, 21.33 ft. Lt. to Sta. 13+82.81, 15.80 ft. Lt.
Remove & Reset Existing Granite Curb.
Construct New Sidewalk

13+75.00
Sta. 13+90.00
END TRANSITION
BEGIN PROJECT

Sta. 13+86.08, 22.92 ft. Rt. to Sta. 13+94.65, 14.58 ft. Rt.
Install 12.5 ft. Type 3c Guardrail 8ft. Radius
with Terminal End

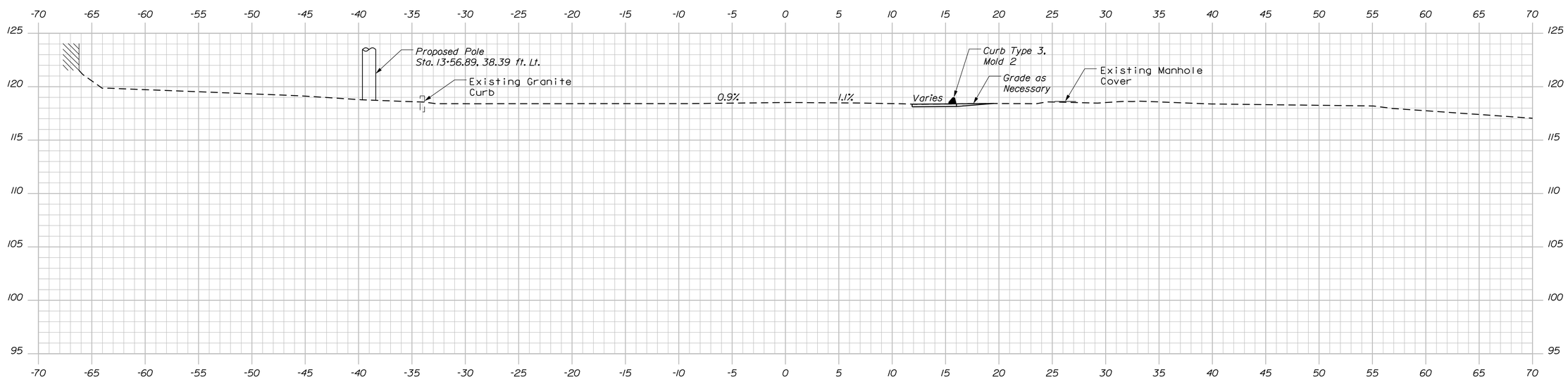

13+50.00
Sta. 13+65.00
MATCH EXISTING
BEGIN TRANSITION

STATE OF MAINE
DEPARTMENT OF TRANSPORTATION

STP-2048(000)

WIN
20480.00

BRIDGE NO. 2117

BRIDGE PLANS

		BY	DATE
PROJ. MANAGER	M. WIGHT		
DESIGN-DETAILED	J. HASBROUCK	D. SULLIVAN	DEC 2015
CHECKED-REVIEWED	B. REEVES	W. ROHMAN	DEC 2015
DESIGN2-DETAILED2	L. KRUSINSKI	T. WHITE	JUN 2014
DESIGN3-DETAILED3	-----	W. ROHMAN	-----
REVISIONS 1	-----	-----	-----
REVISIONS 2	-----	-----	-----
REVISIONS 3	-----	-----	-----
REVISIONS 4	-----	-----	-----
FIELD CHANGES	-----	-----	-----

SIGNATURE

P.E. NUMBER

DATE

CAIN BRIDGE
TWELVE MILE BROOK
CLINTON KENNEBEC COUNTY

CROSS SECTIONS

SHEET NUMBER
8
OF 27

Sta. 13+50.00 to Sta. 13+75.00

Filename: ...\MSTA\008_XSECT_13-50_002.dgn Division: BRIDGE Username: David.Sullivan Date:1/7/2016

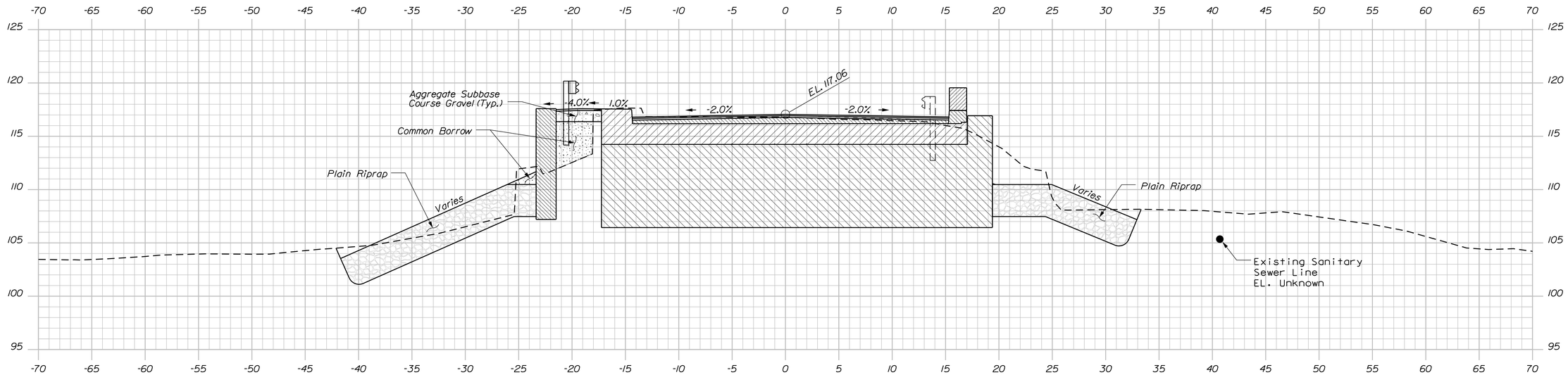

Sta. 14+74.85, 37.43 Lt., Outlet EL. 104.59±
to Catch Basin at Sta. 15+00.00, Lt.
Install 34.00 ft., 12 in. Culvert Pipe Option III

Sta. 14+74.85, 37.43 Lt., Outlet EL. 104.59±
to Catch Basin at Sta. 15+69.11, Lt.
Install 34.00 ft., 12 in. Culvert Pipe Option III

Sta. 14+75.08, 14.37 ft. Lt. to Sta. 15+71.87, 20.73 ft. Lt.
Install Sidewalk and Curb Type 3, Mold 1

Sta. 14+72.65, 19.23 ft. Lt. to Sta. 14+42.92, 19.98 ft. Rt.
Install Bridge Transition Type 1

14+75.00

Sta. 14+75.96, 15.28 ft. Rt. to Sta. 15+66.54, 15.50 ft. Rt.
Install Curb Type 3, Mold 2
Return Curb to Sta. 15+09.76, 17.15 ft. Rt.

Sta. 14+73.59, 15.35 ft. Rt. to Sta. 14+94.23, 14.66 ft. Rt.
Install Bridge Transition Type 1

Sta. 14+74.85, 32.00 Rt., Outlet EL. 108.00±
to Catch Basin at Sta. 15+00.00, Rt.
Install 30.00 ft., 12 in. Culvert Pipe Option III

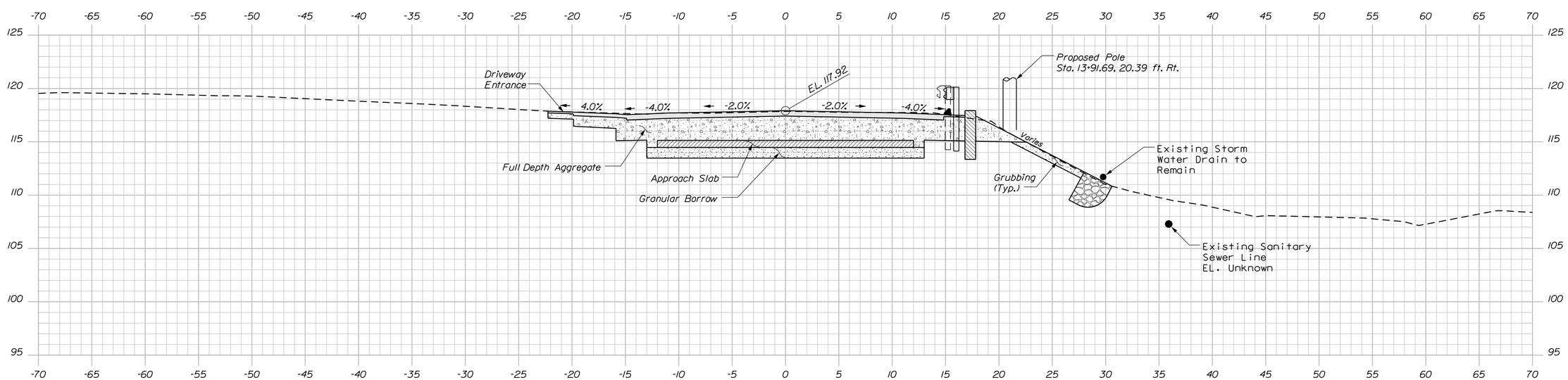

Sta. 14+08.04, 27.39 ft. Lt. to Sta. 14+16.35, 19.30 ft. Rt.
Install Bridge Transition Type 1 with 8 ft. Radius

14+00.00

Sta. 13+94.65, 14.58 ft. Rt. to Sta. 14+15.41, 15.35 ft. Rt.
Install Bridge Transition Type 1

Sta. 13+94.65, 14.58 ft. Rt. to Sta. 14+13.08, 15.28 ft.
Install Curd Type 3, Mold 2

STATE OF MAINE
DEPARTMENT OF TRANSPORTATION

STP-2048(000)

WIN 20480.00

BRIDGE NO. 2117

BRIDGE PLANS

		BY	DATE
PROJ. MANAGER	M. WIGHT		
DESIGN-DETAILED	J. HASBROUCK	D. SULLIVAN	DEC 2015
CHECKED-REVIEWED	B. REEVES	W. ROHMAN	DEC 2015
DESIGN2-DETAILED2	L. KRUSINSKI	T. WHITE	JUN 2014
DESIGN3-DETAILED3	-----	W. ROHMAN	-----
REVISIONS: 1	-----		-----
REVISIONS: 2	-----		-----
REVISIONS: 3	-----		-----
REVISIONS: 4	-----		-----
FIELD CHANGES	-----		-----

SIGNATURE

P.E. NUMBER

DATE

CAIN BRIDGE
TWELVE MILE BROOK
CLINTON KENNEBEC COUNTY

CROSS SECTIONS

SHEET NUMBER

9

OF 27

Filename: ...\MSTA\009_XSECT_14+00_003.dgn Division: BRIDGE Username: David.Sullivan Date:1/7/2016

Sta. 14+00.00 to Sta. 14+75.00

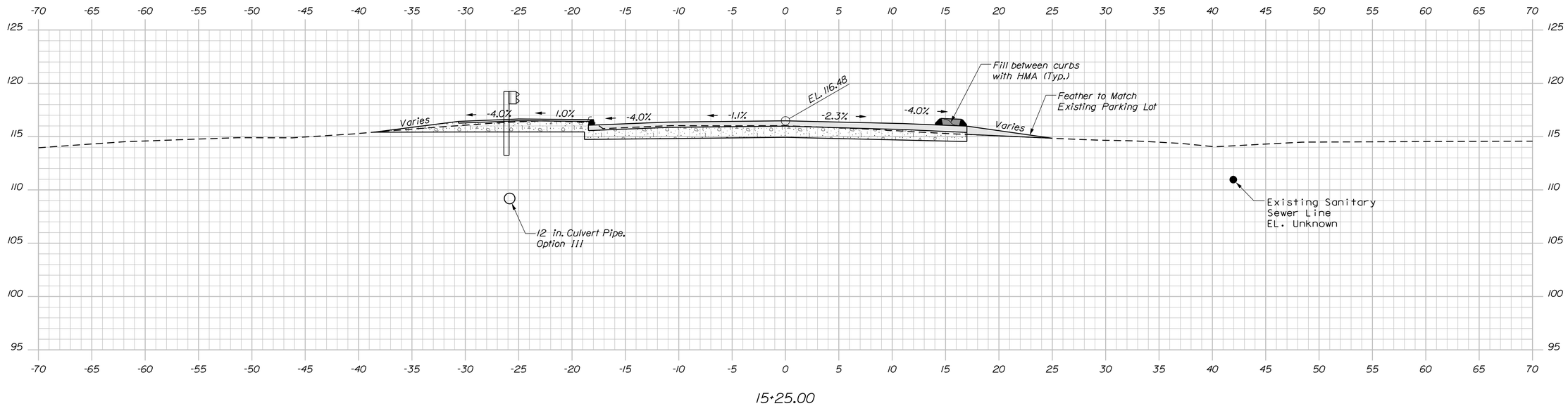

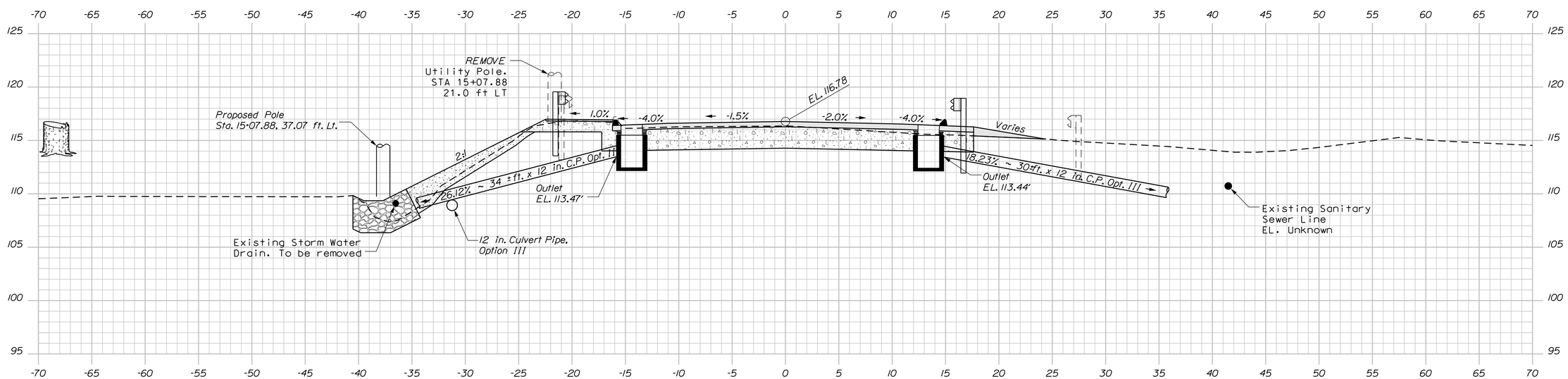

Sta. 15+00.00
Install 34 ft., 12 in.
Culvert Pipe Option III
Outlet EL. 104.59±

Sta. 15+00.00 Lt.
Install Type F4-A Catch Basin

Sta. 14+92.92, 19.98 ft. Lt. to Sta. 15+29.70, 27.62 ft. Lt.
Install Guardrail 350 Flared Terminal

15+00.00
END PROJECT
BEGIN TRANSITION

Sta. 14+94.23, 15.28 ft. Rt. to Sta. 15+10.61, 29.84 ft. Rt.
Install 12.5 ft. Type 3c Guardrail 8ft. Radius
with Terminal End

Sta. 15+00.00 Rt.
Install Type F4-A Catch Basin

Sta. 15+00.00
Install 30 ft., 12 in.
Culvert Pipe Option III
Outlet EL. 108.00±

STATE OF MAINE
DEPARTMENT OF TRANSPORTATION

STP-2048(000)

WIN
20480.00

BRIDGE NO. 2117

BRIDGE PLANS

PROJ. MANAGER	M. WIGHT	BY	DATE
DESIGN-DETAILED	J. HASBROUCK	D. SULLIVAN	DEC 2015
CHECKED-REVIEWED	B. REEVES	W. ROHMAN	DEC 2015
DESIGN2-DETAILED2	L. KRUSINSKI	T. WHITE	JUN 2014
DESIGN3-DETAILED3	-----	W. ROHMAN	-----
REVISIONS 1	-----		-----
REVISIONS 2	-----		-----
REVISIONS 3	-----		-----
REVISIONS 4	-----		-----
FIELD CHANGES	-----		-----

SIGNATURE

P.E. NUMBER

DATE

CAIN BRIDGE
TWELVE MILE BROOK
CLINTON KENNEBEC COUNTY

CROSS SECTIONS

SHEET NUMBER
10
OF 27

Sta. 15+00.00 to Sta. 15+25.00

Filename: ...\MSTA\010_XSECT_15-00_004.dgn Division: BRIDGE Username: David.Sullivan Date:1/7/2016

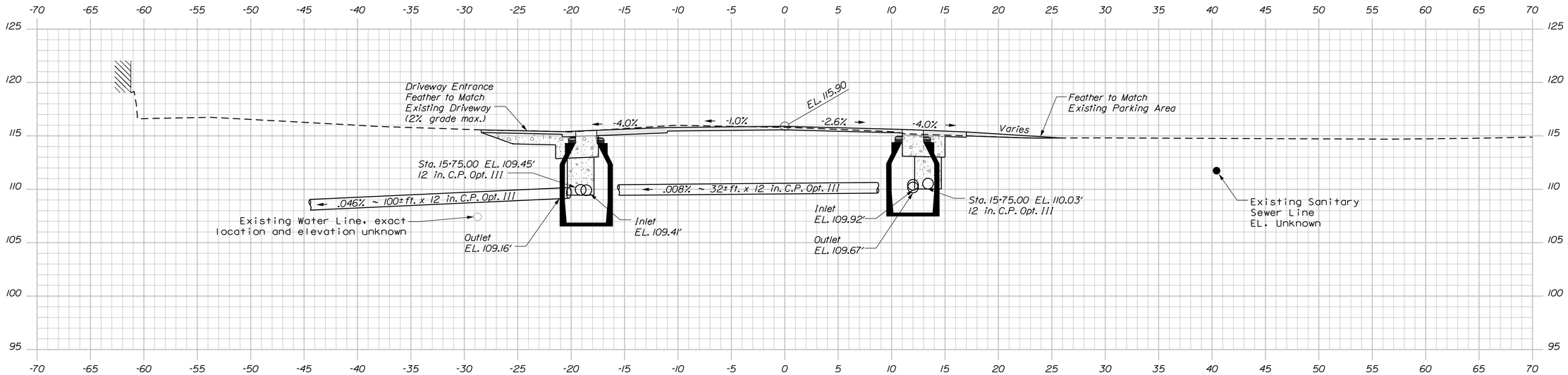

Sta. 15+69.11 Lt.
Install Type B-I-C Catch Basin

Sta. 15+69.11 to Sta. 16+03.80
Lt. offset varies, 35 ft. long
Install 12 in. C.P. Opt. III

Sta. 15+71.87, 20.73 ft. Lt. to Sta. 15+94.55, 20.75 ft. Lt.
Install Driveway Entrance

15+75.00

END 4 INCH OF MILL AND FILL
BEGIN 1½" MILL AND FILL

Sta. 15+62.80 Rt.
Install Type B-I-C Catch Basin

Sta. 15+62.80 to Sta. 16+30.34
Rt. offset varies, 63 ft. long
Install 12 in. C.P. Opt. III

Sta. 15+62.80 Rt. to Sta. 15+69.11 Lt.
Install 32± ft. x 12 in. C.P. Opt. III

Sta. 15+66.54, 15.50 ft. Rt. to Sta. 16+18.55, 16.77 ft. Rt.
Install Parking Area Entrance

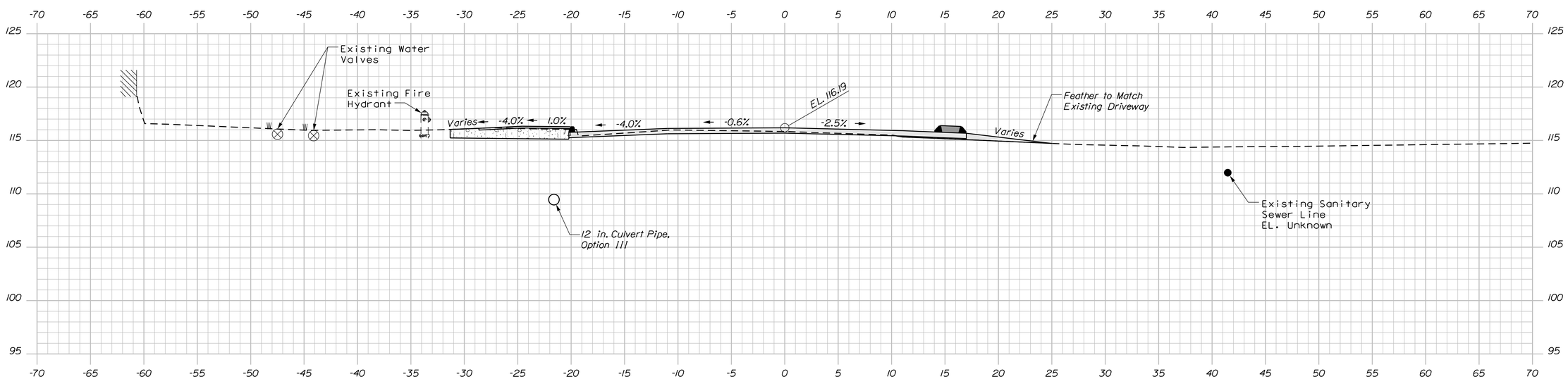

15+50.00

END TRANSITION
BEGIN 4 INCH OF MILL AND FILL

STATE OF MAINE
DEPARTMENT OF TRANSPORTATION

STP-2048(000)

WIN 20480.00

BRIDGE NO. 2117

BRIDGE PLANS

		BY	DATE
PROJ. MANAGER	M. WIGHT		
DESIGN-DETAILED	J. HASBROUCK	D. SULLIVAN	DEC 2015
CHECKED-REVIEWED	B. REEVES	W. ROHMAN	DEC 2015
DESIGN2-DETAILED2	L. KRUSINSKI	T. WHITE	JUN 2014
DESIGN3-DETAILED3		W. ROHMAN	-----
REVISIONS 1			-----
REVISIONS 2			-----
REVISIONS 3			-----
REVISIONS 4			-----
FIELD CHANGES			-----

SIGNATURE

P.E. NUMBER

DATE

CAIN BRIDGE
TWELVE MILE BROOK
CLINTON KENNEBEC COUNTY

CROSS SECTIONS

SHEET NUMBER

11

OF 27

Sta. 15+50.00 to Sta. 15+75.00

Filename: ...\MSTA\011_XSECT_15+50_005.dgn Division: BRIDGE Username: David.Sullivan Date:1/7/2016

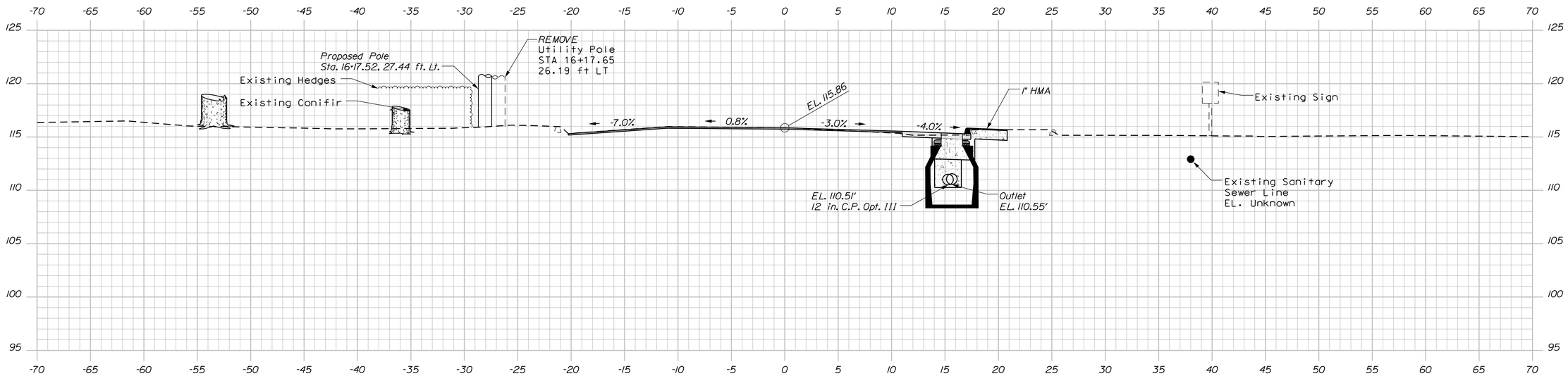

16+25.00

Sta. 16+30.34 Rt.
Install Type B-1-C Catch Basin

Sta. 16+18.55, 16.77 ft. Rt. to Sta. 16+42.35, 16.62 ft. Rt.
Install Curb Type 3, Mold 2

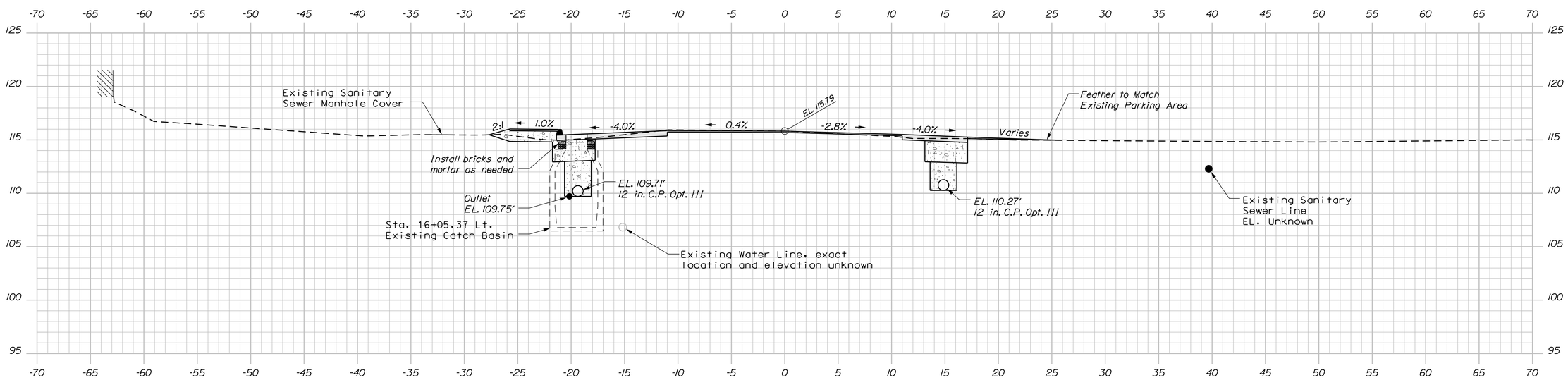

Sta. 15+94.55, 20.75 ft. Lt. to Sta. 16+55.23, 20.75 ft. Lt.
Install Sidewalk and Curb Type 3, Mold 1

16+00.00

STATE OF MAINE
DEPARTMENT OF TRANSPORTATION

STP-2048(000)

WIN
20480.00

BRIDGE NO. 2117

BRIDGE PLANS

		BY	DATE
PROJ. MANAGER	M. WIGHT		
DESIGN-DETAILED	J. HASBROUCK	D. SULLIVAN	
CHECKED-REVIEWED	B. REEVES	W. ROHMAN	DEC 2015
DESIGN2-DETAILED2	L. KRUSINSKI	T. WHITE	JUN 2014
DESIGN3-DETAILED3	-----	W. ROHMAN	-----
REVISIONS: 1	-----		-----
REVISIONS: 2	-----		-----
REVISIONS: 3	-----		-----
REVISIONS: 4	-----		-----
FIELD CHANGES	-----		-----

SIGNATURE

P.E. NUMBER

DATE

CAIN BRIDGE
TWELVE MILE BROOK
CLINTON KENNEBEC COUNTY

CROSS SECTIONS

SHEET NUMBER

12

OF 27

Filename: ...\MSTA\012_XSECT_16+00_006.dgn Division: BRIDGE Username: David.Sullivan Date:1/7/2016

Sta. 16+00.00 to Sta. 16+25.00

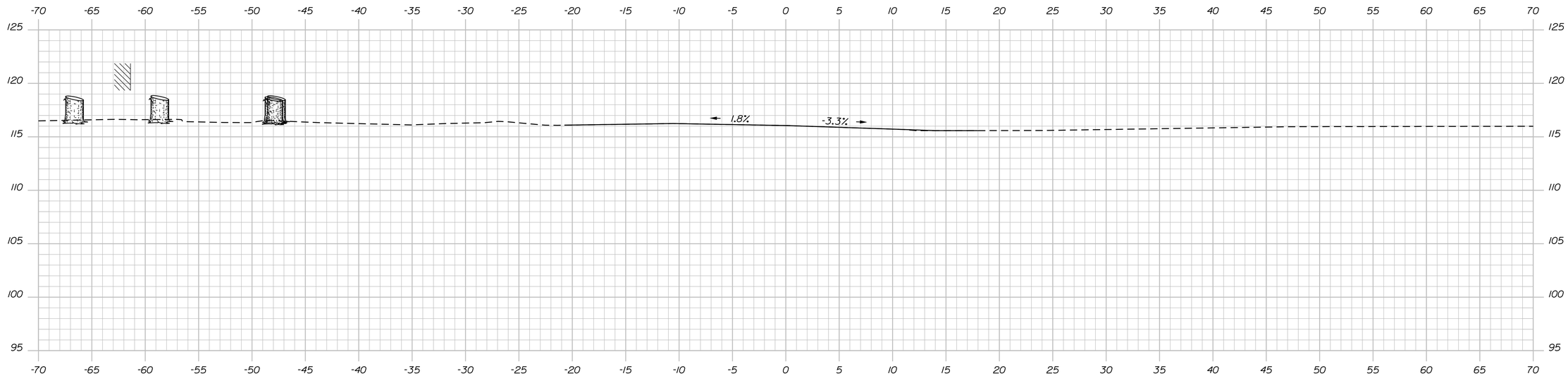

16+75.00

END 1½" MILL AND FILL
MATCH EXISTING

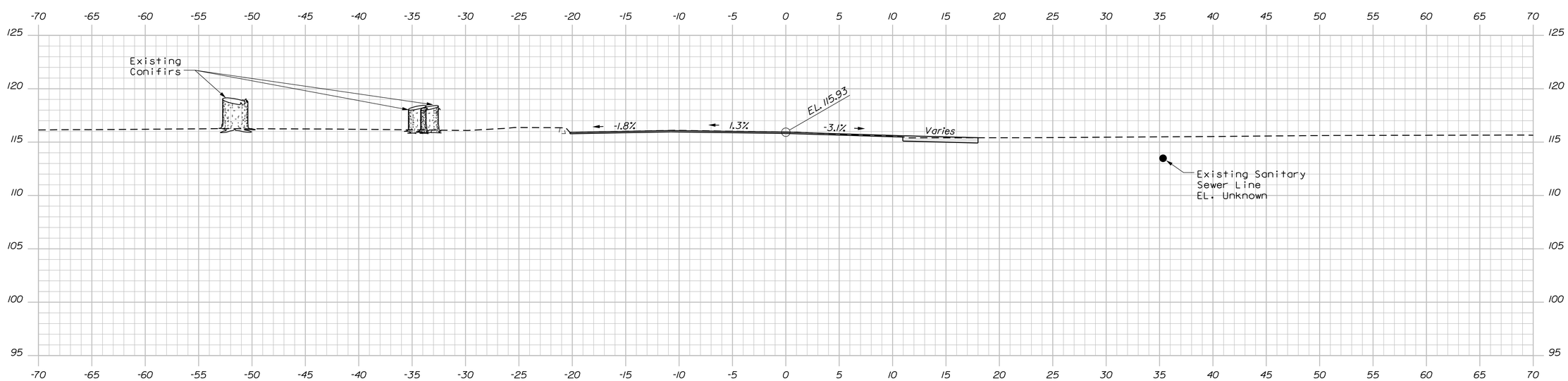

Sta. 16+55.23, 20.75 ft. Lt. to Sta. 16+25.00, 20.73 ft. Lt.
Install Driveway Entrance

16+50.00

STATE OF MAINE
DEPARTMENT OF TRANSPORTATION

STP-2048(000)

WIN
20480.00

BRIDGE NO. 2117

BRIDGE PLANS

		BY	DATE
PROJ. MANAGER	M. WIGHT		
DESIGN-DETAILED	J. HASBROUCK	D. SULLIVAN	DEC 2015
CHECKED-REVIEWED	B. REEVES	W. ROHMAN	DEC 2015
DESIGN2-DETAILED2	L. KRUSINSKI	T. WHITE	JUN 2014
DESIGN3-DETAILED3	-----	W. ROHMAN	-----
REVISIONS 1	-----		-----
REVISIONS 2	-----		-----
REVISIONS 3	-----		-----
REVISIONS 4	-----		-----
FIELD CHANGES	-----		-----

SIGNATURE

P.E. NUMBER

DATE

CAIN BRIDGE
TWELVE MILE BROOK
CLINTON KENNEBEC COUNTY

CROSS SECTIONS

SHEET NUMBER

13

OF 27

Sta. 16+50.00 to Sta. 16+75.00

Filename: ...\MSTA\013_XSECT_16+50_007.dgn Division: BRIDGE Username: David.Sullivan Date:1/7/2016

ABUTMENT NOTES

1. Structural Earth Excavation, Abutments and Retaining Walls, required more than 12 inches below the bottom of the structure, will be paid for in accordance with Standard Specifications Section 206, Structural Excavation.

2. Reinforcing steel shall have a minimum concrete cover of 2 inches in the walls and 3 inches when cast against earth unless otherwise noted.

3. Place 4-in. diameter drains in the breastwall and wingwalls at 10-ft maximum spacing. The exact location will be determined by the Resident.

4. To ensure an accurate match with the superstructure, the parapet portions of the wingwalls shall be placed after erection of the precast units.

5. Cover joints where waterstops are not required in accordance with Standard Details Section 502.

6. Construct French Drains behind the abutments and wingwalls in accordance with Standard Specifications Section 512, French Drains.

7. Abutments, wingwalls and their footings shall be backfilled with Granular Borrow. Pay limits will be the structural excavation limits in cut areas and a vertical plane located 10 feet behind the walls in fill areas.

8. Abutment elevations are given at the centerline of bearing.

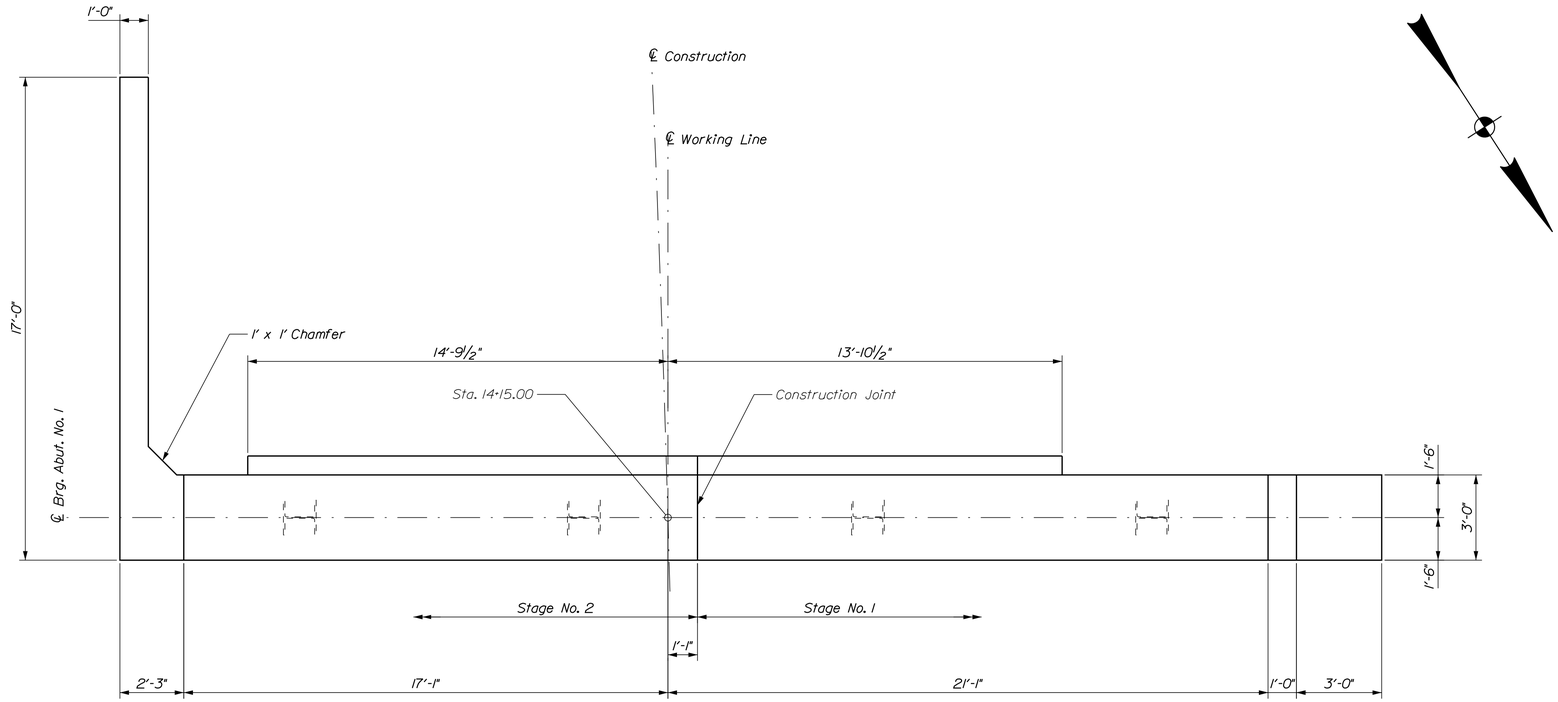

ABUTMENT No. 1 PLAN

Flow

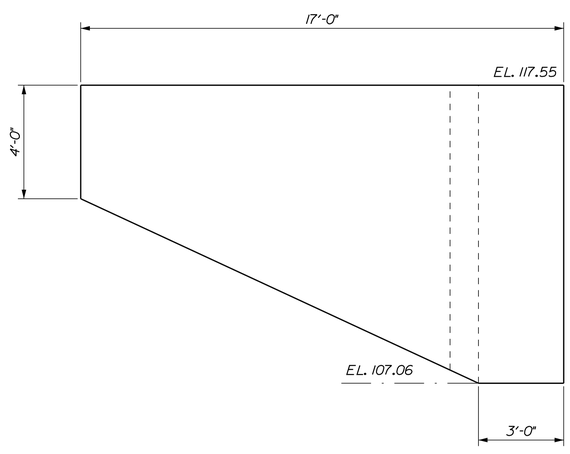

ABUTMENT No. 1 WINGWALL ELEVATION

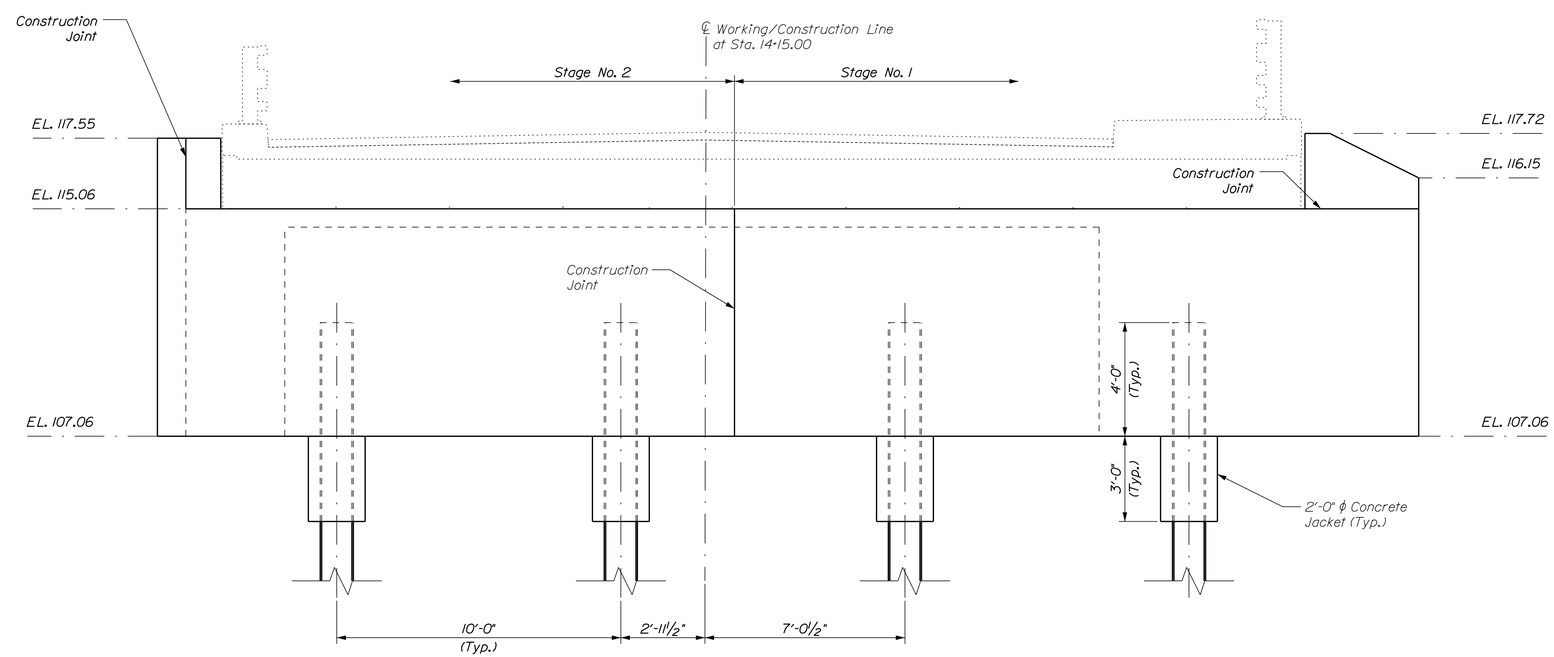

ABUTMENT No. 1 ELEVATION

Flow

STATE OF MAINE
DEPARTMENT OF TRANSPORTATION

STP-2048(000)

WIN 20480.00

BRIDGE NO. 2117

BRIDGE PLANS

PROJ. MANAGER	M. WIGHT	BY	DATE
DESIGN-DETAILED	J. HASBROUCK	D. SULLIVAN	
CHECKED-REVIEWED	B. REEVES	W. ROHMAN	DEC 2015
DESIGN2-DETAILED2	L. KRUSINSKI	T. WHITE	JUN 2014
DESIGN3-DETAILED3	-----	W. ROHMAN	-----
REVISIONS 1	-----		-----
REVISIONS 2	-----		-----
REVISIONS 3	-----		-----
REVISIONS 4	-----		-----
FIELD CHANGES	-----		-----

SIGNATURE

P.E. NUMBER

DATE

CAIN BRIDGE
TWELVE MILE BROOK
CLINTON KENNEBEC COUNTY

ABUTMENT No. 1

SHEET NUMBER

14

OF 27

Filename: ...\MSTA\014_Abutment_No 1.dgn Division: BRIDGE Username: David.Sullivan Date:1/7/2016

LEGEND

N.F. = Near Face
F.F. = Far Face
E.F. = Each Face
Eq. Sp. = Equally Spaced

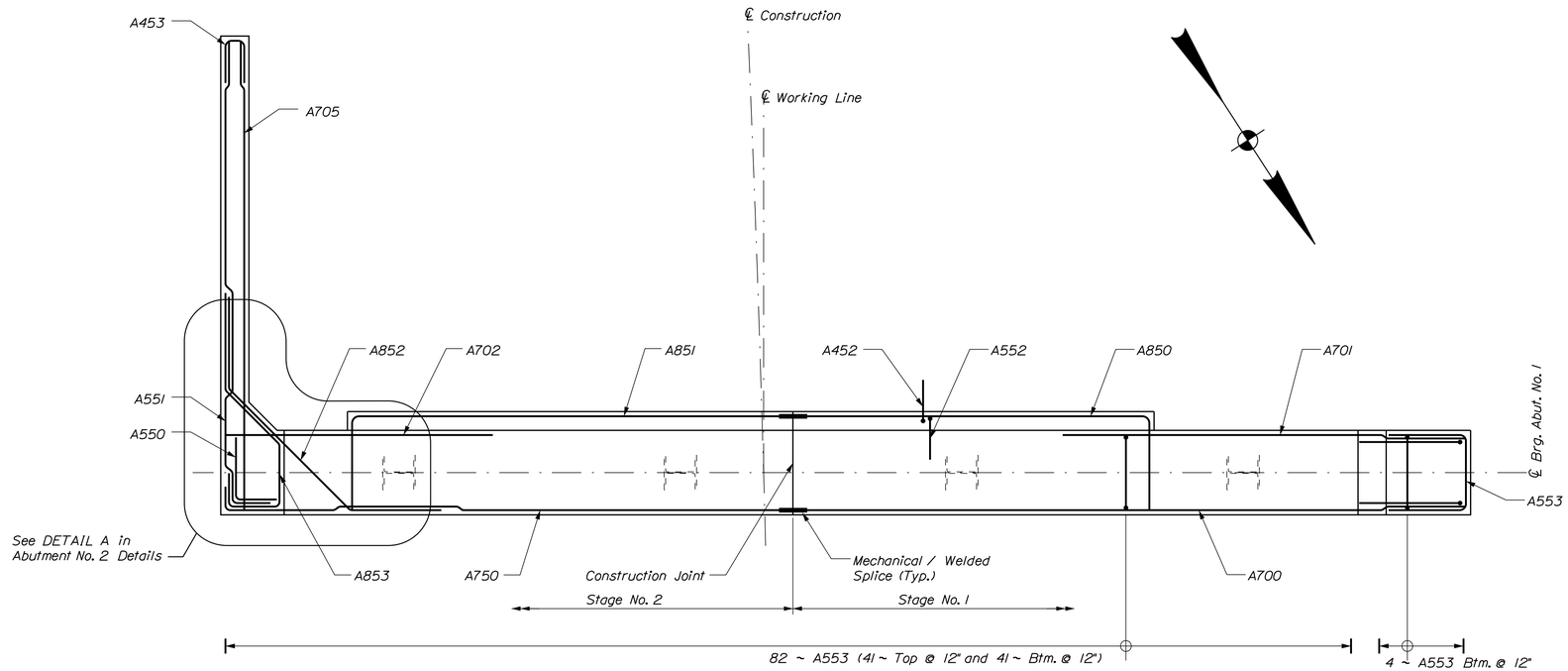

ABUTMENT No. 1 REINFORCING STEEL PLAN

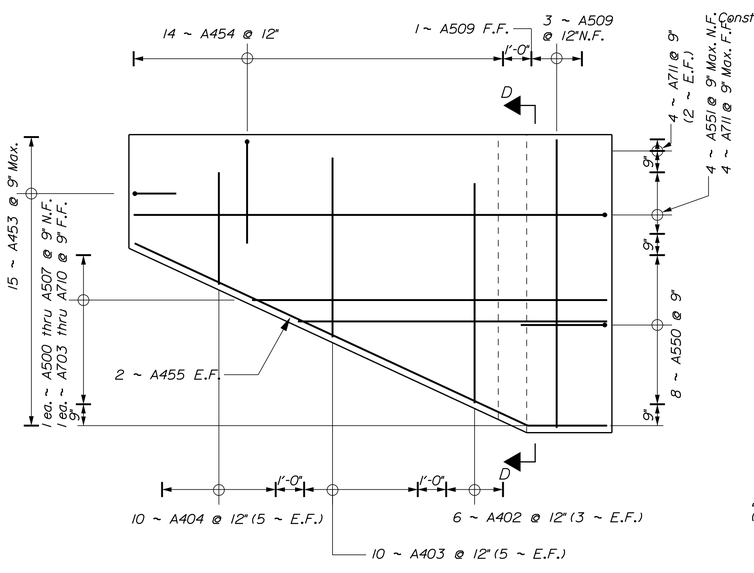

ABUTMENT No. 1 WINGWALL REINFORCING STEEL ELEVATION

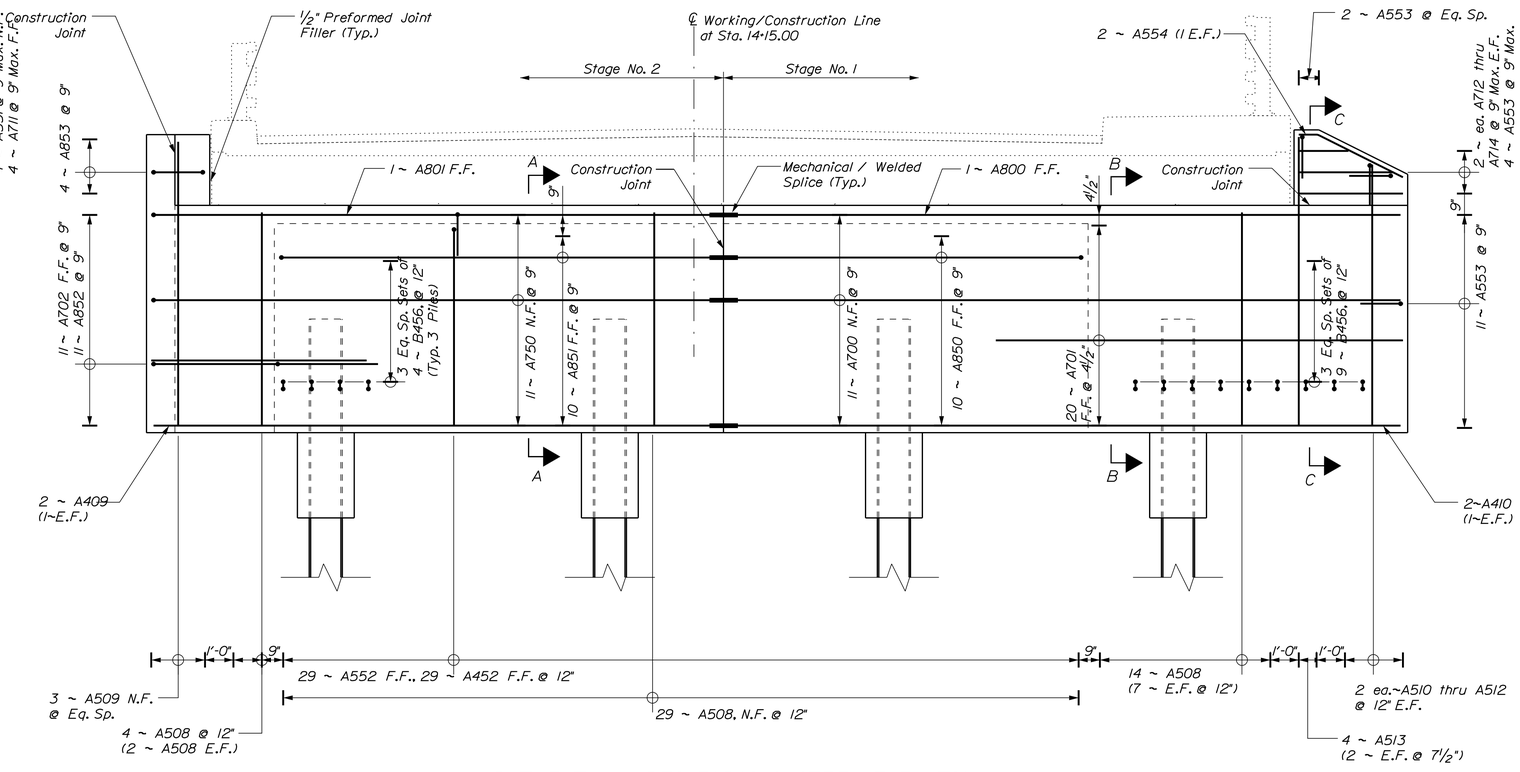

ABUTMENT No. 1 REINFORCING STEEL ELEVATION

STATE OF MAINE
DEPARTMENT OF TRANSPORTATION

STP-2048(000)

WIN 20480.00

BRIDGE NO. 2117

BRIDGE PLANS

PROJ. MANAGER	M. WIGHT	BY	DATE
DESIGN-DETAILED	J. HASBROUCK	D. SULLIVAN	DEC 2015
CHECKED-REVIEWED	B. REEVES	W. ROHMAN	JUN 2014
DESIGN2-DETAILED2	L. KRUSINSKI	T. WHITE	----
DESIGN3-DETAILED3	----	W. ROHMAN	----
REVISIONS 1	----		----
REVISIONS 2	----		----
REVISIONS 3	----		----
REVISIONS 4	----		----
FIELD CHANGES	----		----

SIGNATURE

P.E. NUMBER

DATE

CAIN BRIDGE
TWELVE MILE BROOK
CLINTON KENNEBEC COUNTY

ABUTMENT No. 1 DETAILS

SHEET NUMBER

15

OF 27

Filename: ...\015_Abutment_No 1_Rebar.dgn Division: BRIDGE Username: David.Sullivan Date:1/7/2016

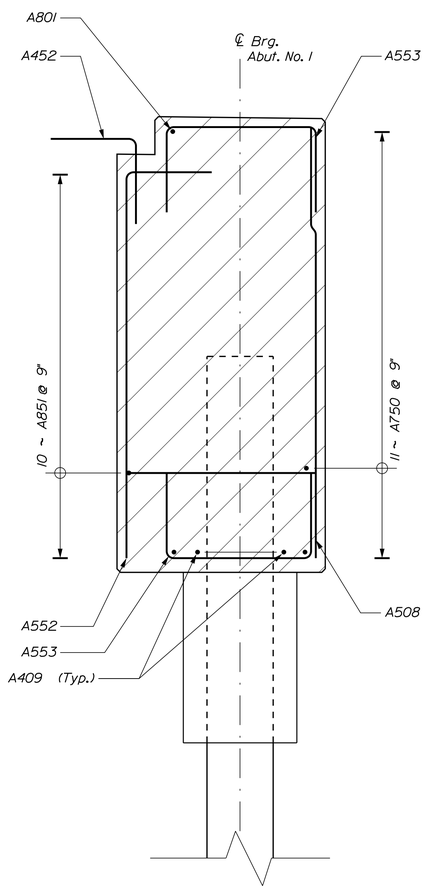

ABUTMENT SECTION A-A

Reinforcing Steel Layout
Abutment No. 1

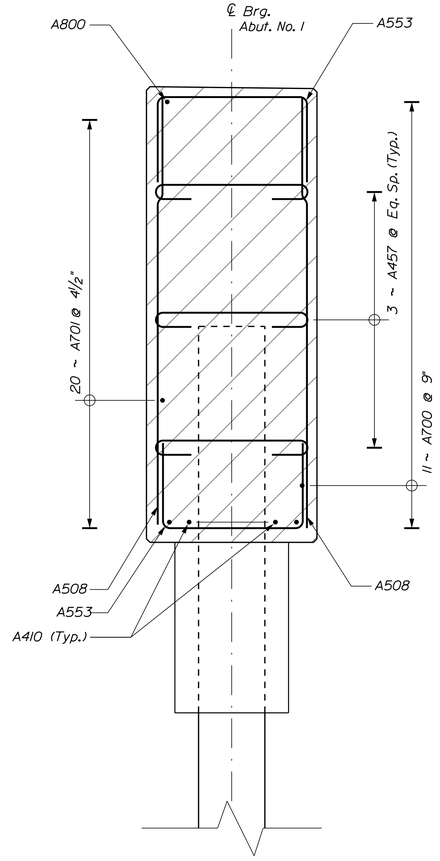

ABUTMENT SECTION B-B

Reinforcing Steel Layout
Abutment No. 1

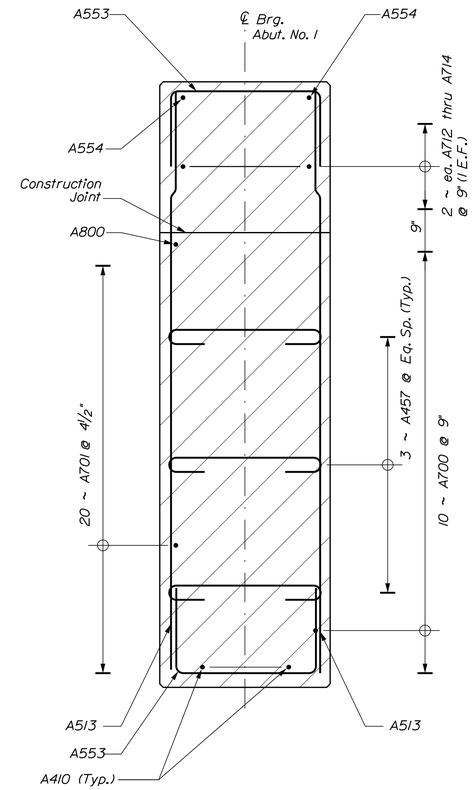

ABUTMENT SECTION C-C

Reinforcing Steel Layout
Abutment No. 1

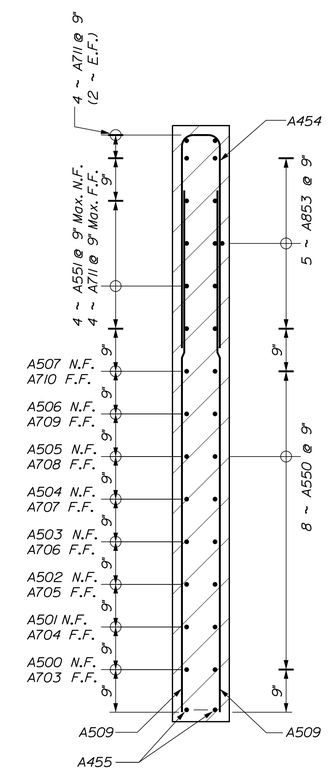

WINGWALL SECTION D-D

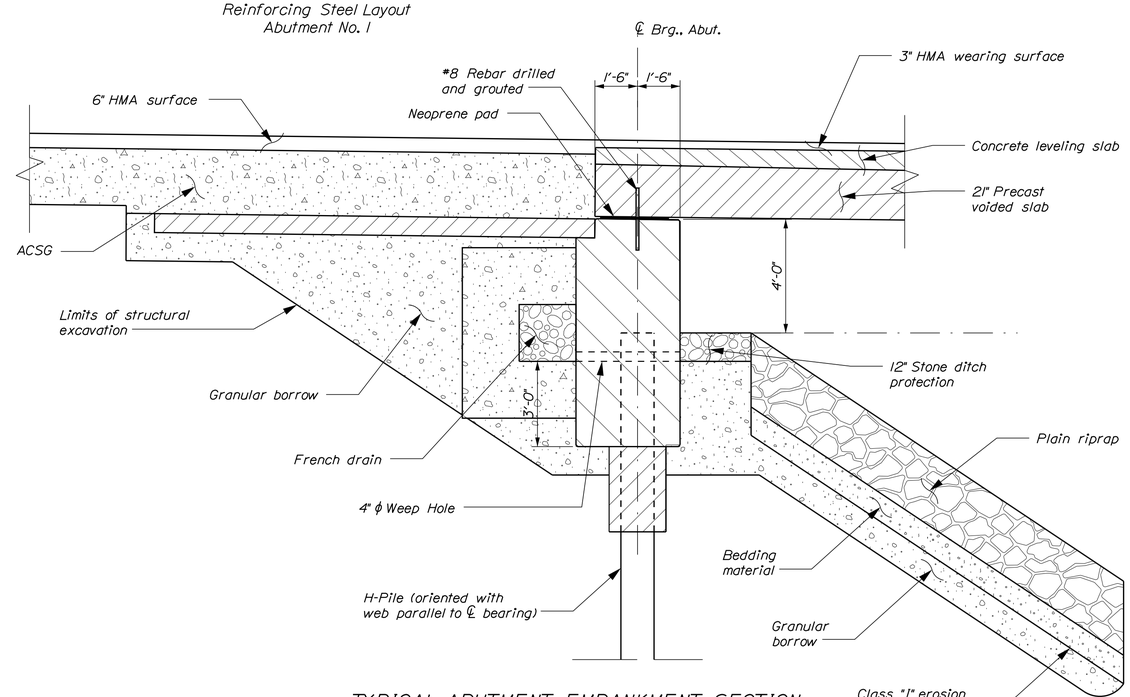

TYPICAL ABUTMENT EMBANKMENT SECTION

Abutment No. 1 shown, Abutment No. 2 similar, opposite hand

STATE OF MAINE
DEPARTMENT OF TRANSPORTATION

STP-2048(000)

WIN 20480.00

BRIDGE NO. 2117

BRIDGE PLANS

		BY	DATE
PROJ. MANAGER	M. WIGHT		
DESIGN-DETAILED	J. HASBROUCK	D. SULLIVAN	
CHECKED-REVIEWED	B. REEVES	W. ROHMAN	DEC 2015
DESIGN2-DETAILED2	L. KRUSINSKI	T. WHITE	JUN 2014
DESIGN3-DETAILED3	-----	W. ROHMAN	-----
REVISIONS 1	-----	-----	-----
REVISIONS 2	-----	-----	-----
REVISIONS 3	-----	-----	-----
REVISIONS 4	-----	-----	-----
FIELD CHANGES	-----	-----	-----

SIGNATURE

P.E. NUMBER

DATE

CAIN BRIDGE
TWELVE MILE BROOK
CLINTON KENNEBEC COUNTY

ABUTMENT No. 1 DETAILS

SHEET NUMBER

16

OF 27

Filename: ...\016_Abutment_No 1_Rebar_Dtls.dgn Division: BRIDGE Username: David.Sullivan Date:1/7/2016

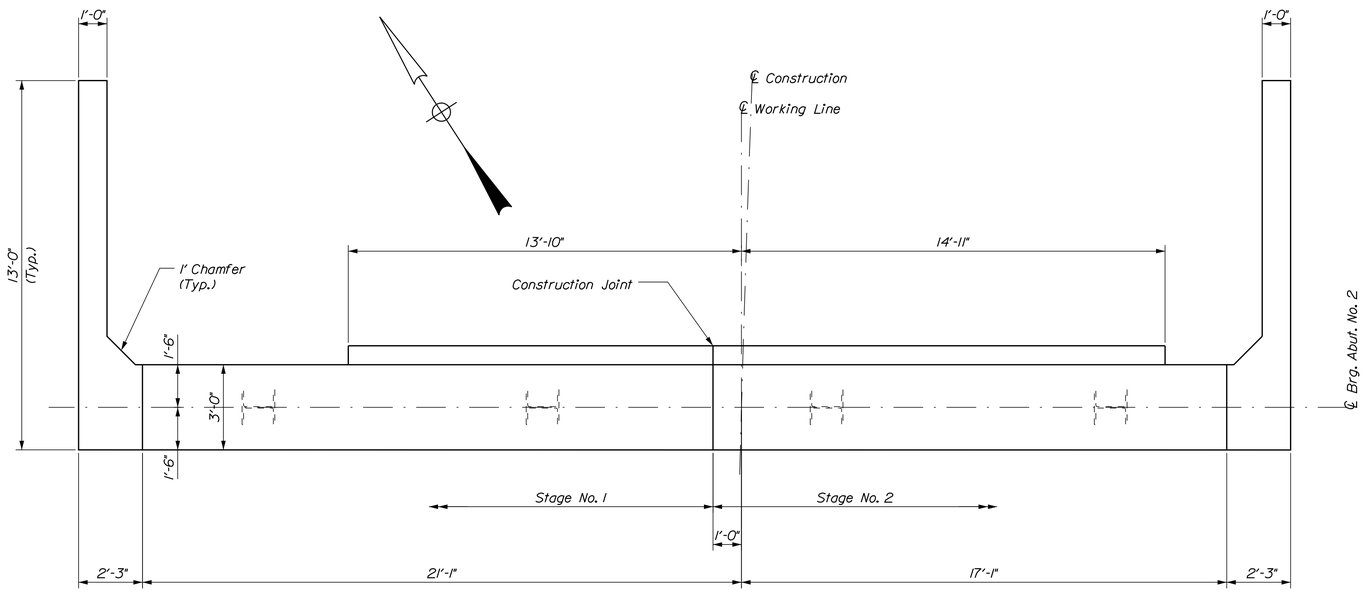

ABUTMENT No. 2 PLAN

Flow

PILE NOTES

1. The maximum factored pile load is 335.3 kips.

2. H-pile material shall be ASTM A 572, Grade 50.

3. Estimate of piles required:

   Abutment No. 1: 4 ~ HP 14x89 @ 18.5 feet
   Abutment No. 2: 4 ~ HP 14x89 @ 24.5 feet

The order lengths of the piles shall include an additional 5 feet of length for each test pile to accommodate dynamic pile testing equipment. No additional payment will be made for additional pile length needed to accommodate dynamic pile testing equipment. The cost will be incidental to related contract items.

4. All piles shall be equipped with a Rock Injector HP-80500 pile tip or approved equal, in accordance with Special Provision Section 501, Rock Injector Pile Tips.

5. The Contractor shall perform and submit a wave equation analysis for review and acceptance by the Resident. The maximum allowable driving stress is 0.90 times Fy. The submittal analyses shall include the proposed stopping criteria based on the wave equation analysis and the proposed driving system. The stopping criteria shall include the blows per inch and the number of 1-in. intervals at which pile installation may be terminated. The cost of performing the wave equation analysis will be considered incidental to Item No. 501.92, Pile Driving Equipment Mobilization.

6. The Contractor shall perform 2 dynamic load test(s) to confirm the ultimate capacity of the piles. The required nominal resistance for the pile is the factored axial pile load divided by a resistance factor of 0.65 per LRFD Specifications. The dynamic test shall be performed on the first production pile driven at each abutment.

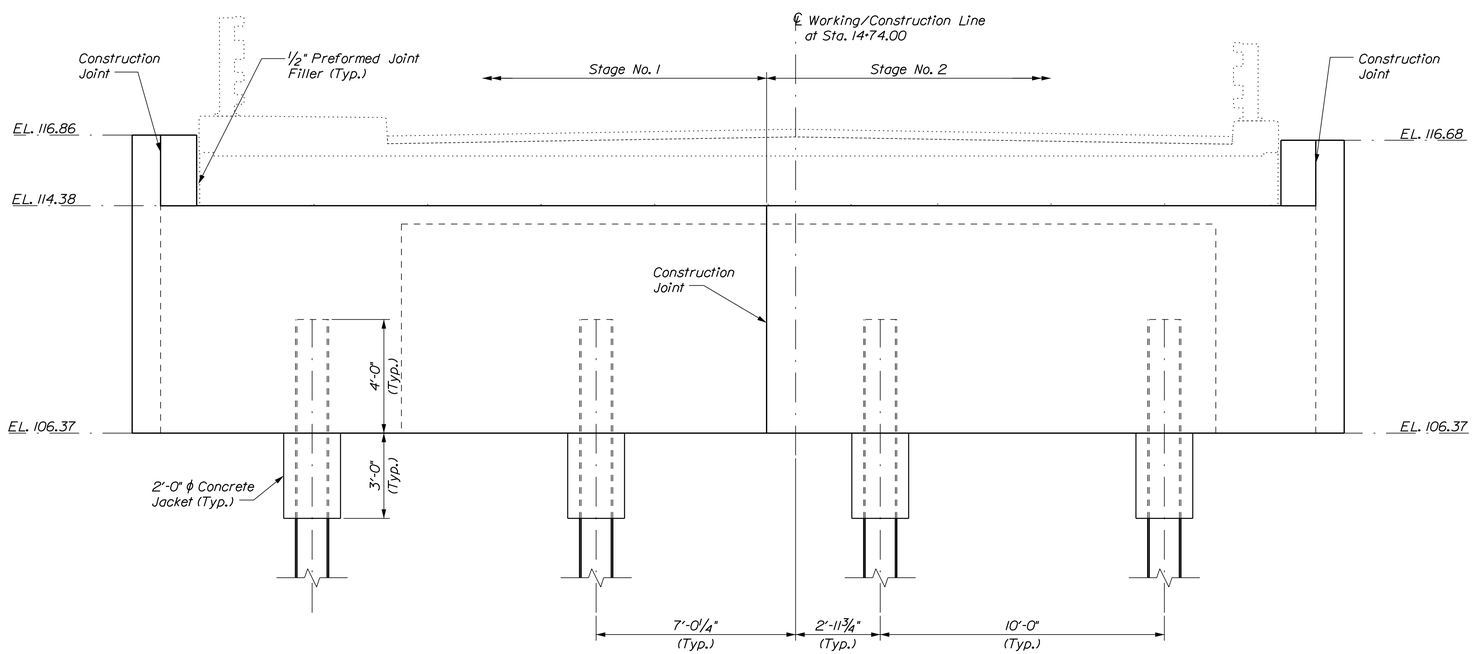

ABUTMENT No. 2 ELEVATION

Flow

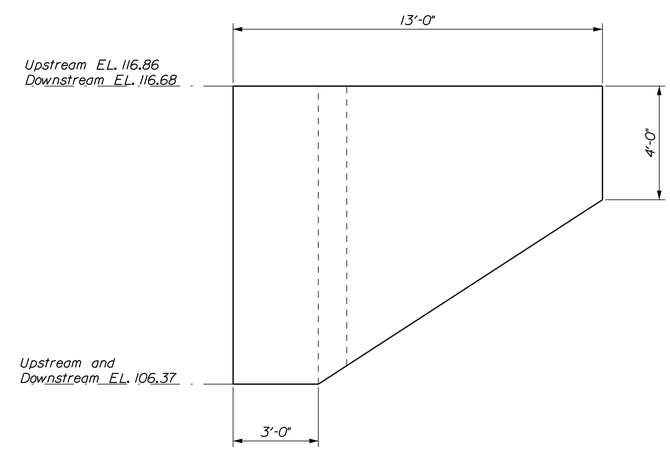

ABUTMENT No. 2 WINGWALL ELEVATION

Downstream wingwall shown, upstream wingwall similar, opposite hand

STATE OF MAINE
DEPARTMENT OF TRANSPORTATION

STP-2048(000)

WIN 20480.00

BRIDGE NO. 2117

BRIDGE PLANS

PROJ. MANAGER	M. WIGHT	BY	DATE
DESIGN-DETAILED	J. HASBROUCK	D. SULLIVAN	DEC 2015
CHECKED-REVIEWED	B. REEVES	W. ROHMAN	DEC 2015
DESIGN2-DETAILED2	L. KRUSINSKI	T. WHITE	JUN 2014
DESIGN3-DETAILED3	-----	W. ROHMAN	-----
REVISIONS 1	-----	-----	-----
REVISIONS 2	-----	-----	-----
REVISIONS 3	-----	-----	-----
REVISIONS 4	-----	-----	-----
FIELD CHANGES	-----	-----	-----

SIGNATURE

P.E. NUMBER

DATE

CAIN BRIDGE
TWELVE MILE BROOK
CLINTON KENNEBEC COUNTY

ABUTMENT No. 2

SHEET NUMBER

17

OF 27

Filename: ...\MSTA\017_Abutment_No 2.dgn Division: BRIDGE Username: David.Sullivan Date:1/7/2016

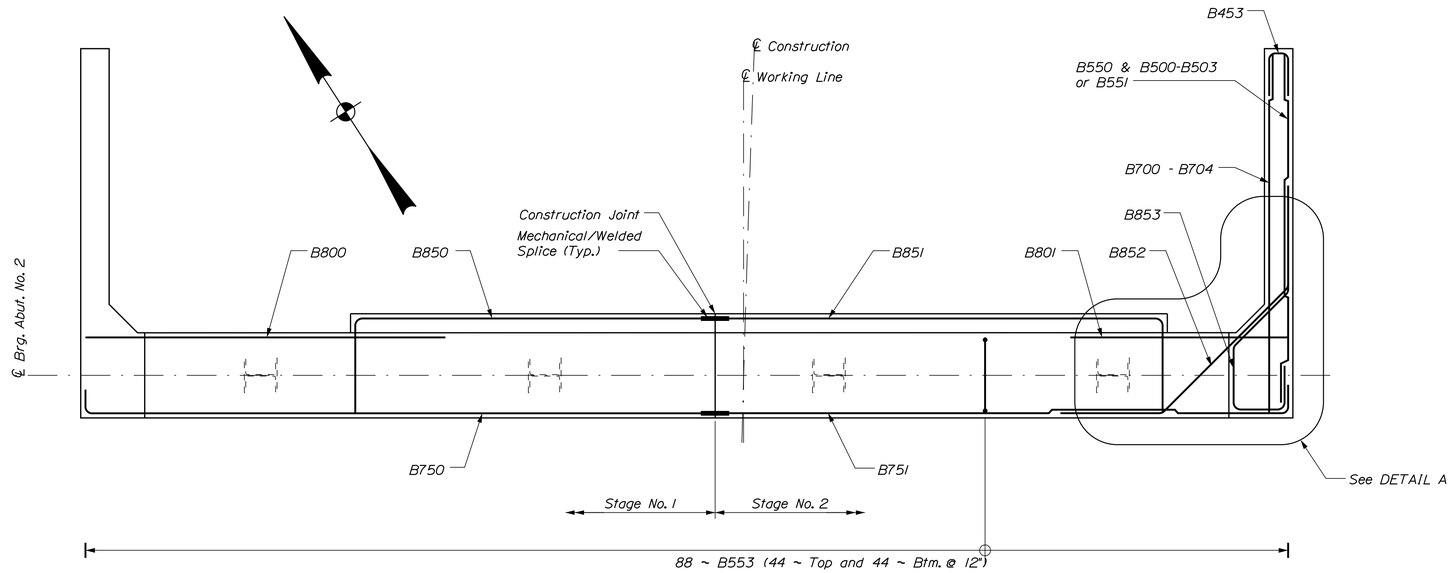

ABUTMENT No. 2 REINFORCING STEEL PLAN

Flow

NOTE:
Upstream wingwall reinforcing steel similar to downstream wingwall, opposite hand.

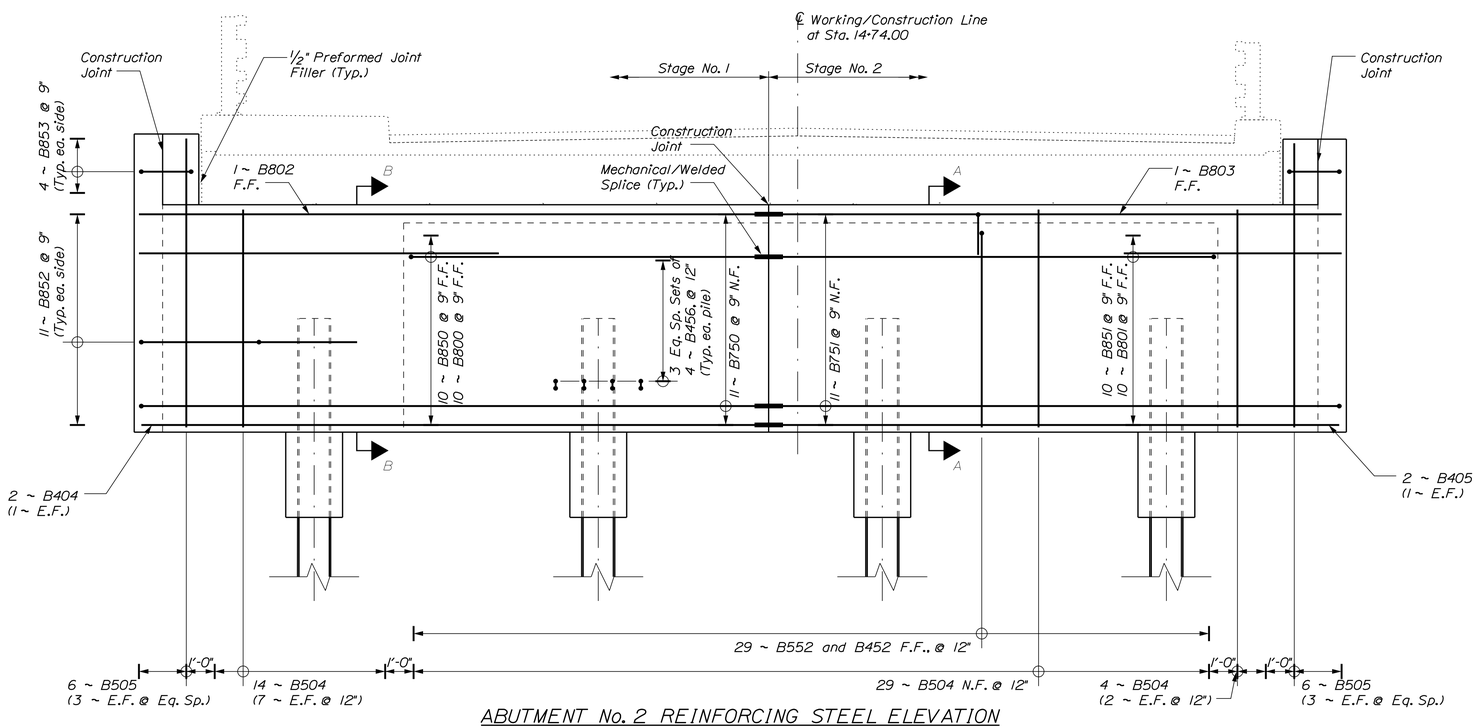

ABUTMENT No. 2 REINFORCING STEEL ELEVATION

Flow

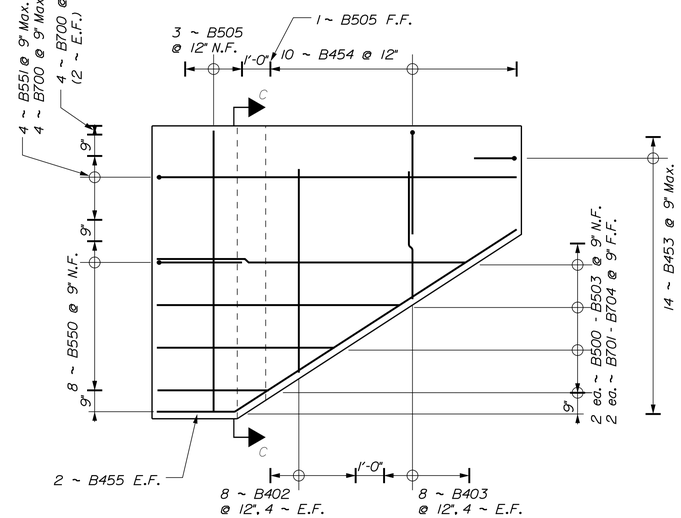

ABUTMENT No. 2 WINGWALL REINFORCING STEEL ELEVATION

Downstream wingwall shown,
upstream wingwall similar, opposite hand.
Trim reinforcing steel as necessary.

LEGEND

N.F. = Near Face
F.F. = Far Face
E.F. = Each Face
Eq. Sp. = Equally Spaced

STATE OF MAINE
DEPARTMENT OF TRANSPORTATION

STP-2048(000)

WIN 20480.00

BRIDGE NO. 2117

BRIDGE PLANS

		BY	DATE
PROJ. MANAGER	M. WIGHT		
DESIGN-DETAILED	J. HASBROUCK	D. SULLIVAN	
CHECKED-REVIEWED	B. REEVES	W. ROHMAN	DEC 2015
DESIGN2-DETAILED2	L. KRUSINSKI	T. WHITE	JUN 2014
DESIGN3-DETAILED3	-----	W. ROHMAN	-----
REVISIONS 1	-----	-----	-----
REVISIONS 2	-----	-----	-----
REVISIONS 3	-----	-----	-----
REVISIONS 4	-----	-----	-----
FIELD CHANGES	-----	-----	-----

SIGNATURE

P.E. NUMBER

DATE

CAIN BRIDGE
TWELVE MILE BROOK
CLINTON KENNEBEC COUNTY

ABUTMENT No. 2 DETAILS

SHEET NUMBER
18
OF 27

Filename: ...\018_Abutment_No 2_Rebar.dgn Division: BRIDGE Username: David.Sullivan Date:1/7/2016

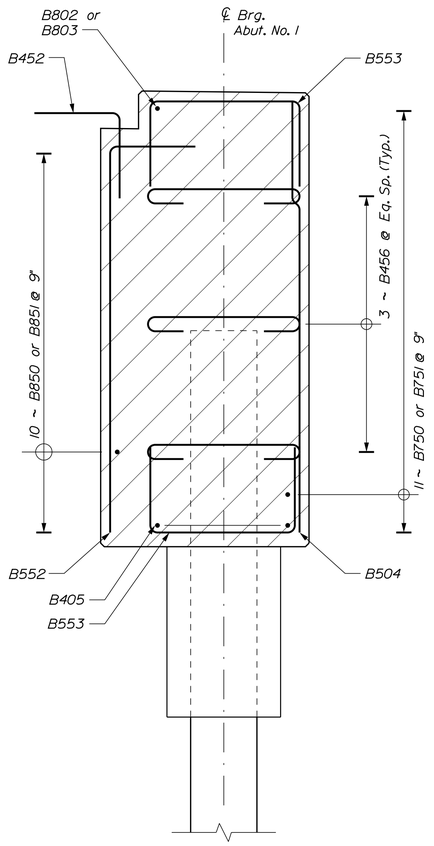

ABUTMENT SECTION A-A

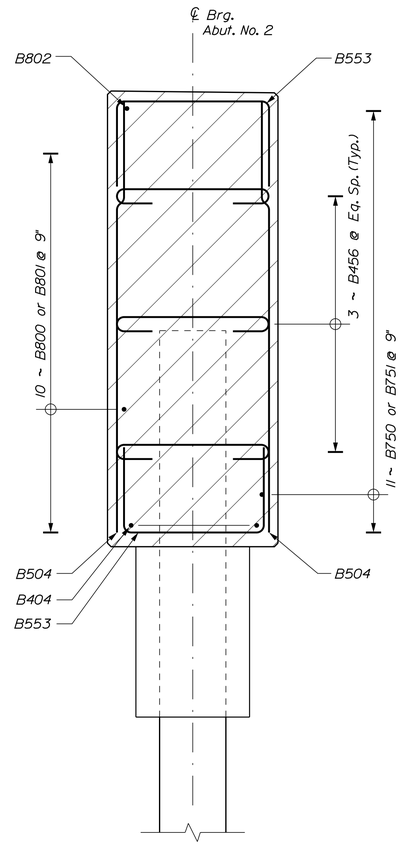

ABUTMENT SECTION B-B

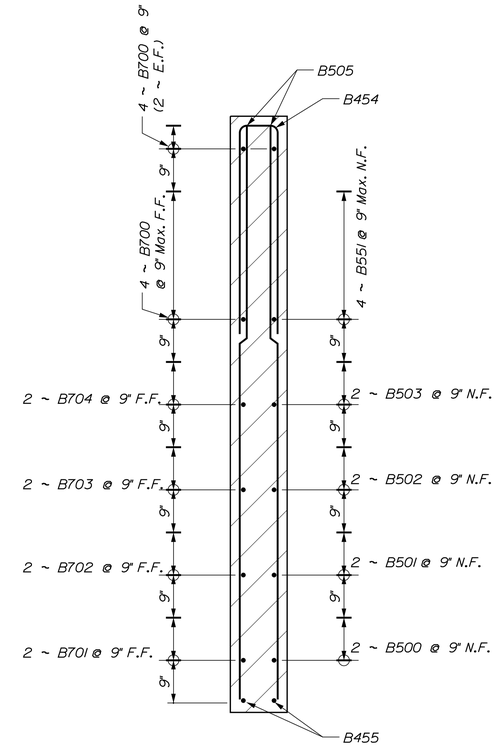

WINGWALL SECTION C-C

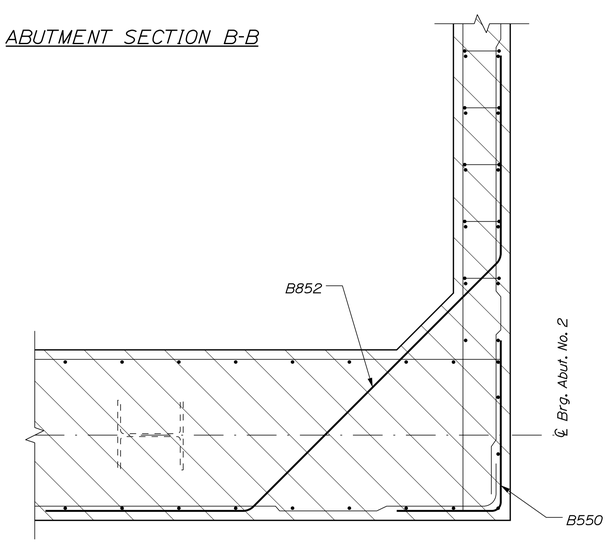

DETAIL A (ABUTMENT REINFORCING STEEL)

Abutment No. 2 shown, Abutment No. 1 Downstream similar, opposite hand.
Corner bars are shown, Abutment bars faded for clarity.

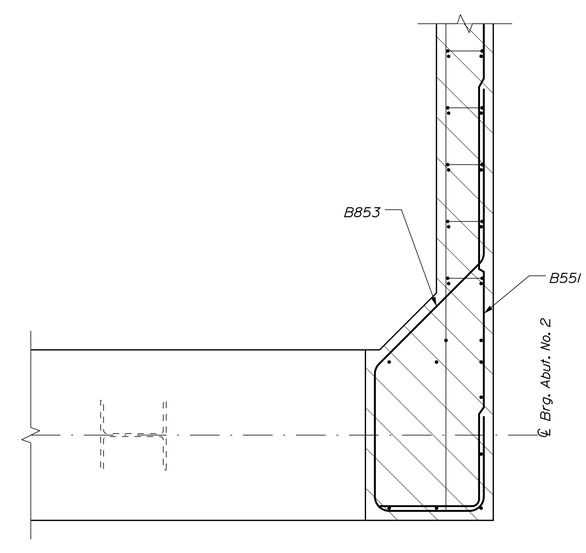

DETAIL A (PARAPET REINFORCING STEEL)

Abutment No. 2 shown, Abutment No. 1 Downstream similar, opposite hand.
Corner bars are shown, Wingwall bars faded for clarity.

STATE OF MAINE
DEPARTMENT OF TRANSPORTATION

STP-2048(000)

WIN 20480.00

BRIDGE NO. 2117

BRIDGE PLANS

PROJ. MANAGER	M. WIGHT	BY	DATE
DESIGN-DETAILED	J. HASBROUCK	D. SULLIVAN	
CHECKED-REVIEWED	B. REEVES	W. ROHMAN	DEC 2015
DESIGN2-DETAILED2	L. KRUSINSKI	T. WHITE	JUN 2014
DESIGN3-DETAILED3	-----	W. ROHMAN	-----
REVISIONS 1	-----		-----
REVISIONS 2	-----		-----
REVISIONS 3	-----		-----
REVISIONS 4	-----		-----
FIELD CHANGES	-----		-----

SIGNATURE

P.E. NUMBER

DATE

CAIN BRIDGE
TWELVE MILE BROOK
CLINTON KENNEBEC COUNTY

ABUTMENT No. 2 DETAILS

SHEET NUMBER

19

OF 27

Filename: ...\019_Abutment_No2_Rebar_Dtls.dgn Division: BRIDGE Username: David.Sullivan Date:1/7/2016

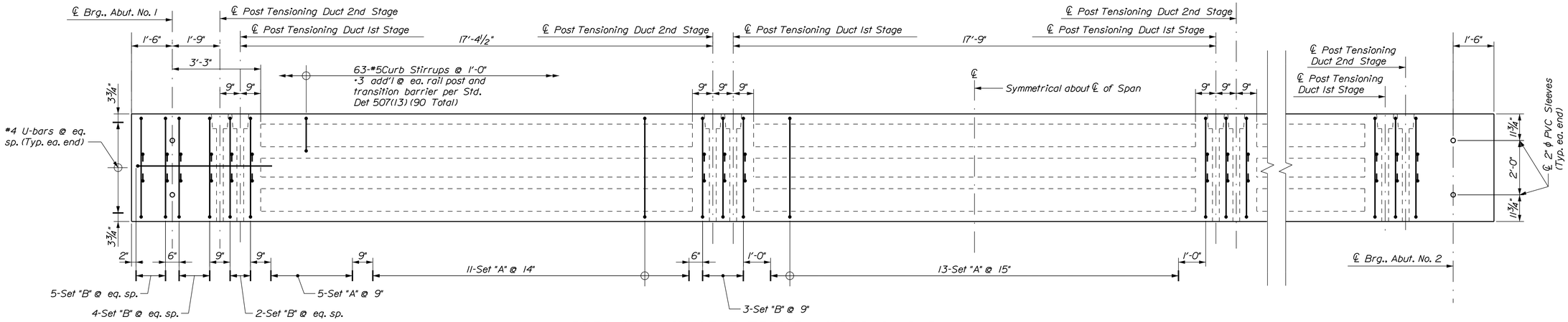

PRECAST 1st STAGE EXTERIOR VOIDED SLAB PLAN

VOIDED SLAB S1

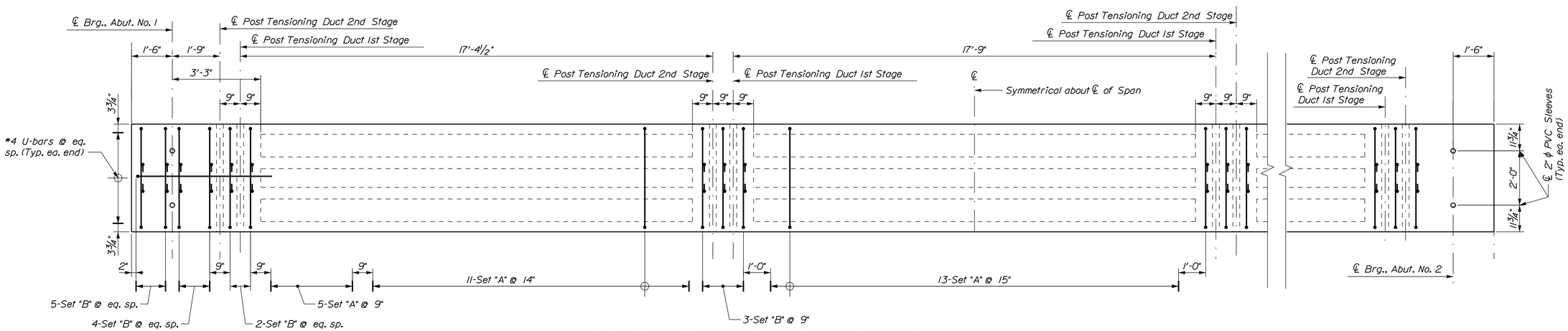

PRECAST 1st STAGE INTERIOR VOIDED SLAB PLAN

VOIDED SLAB S2 THRU S4

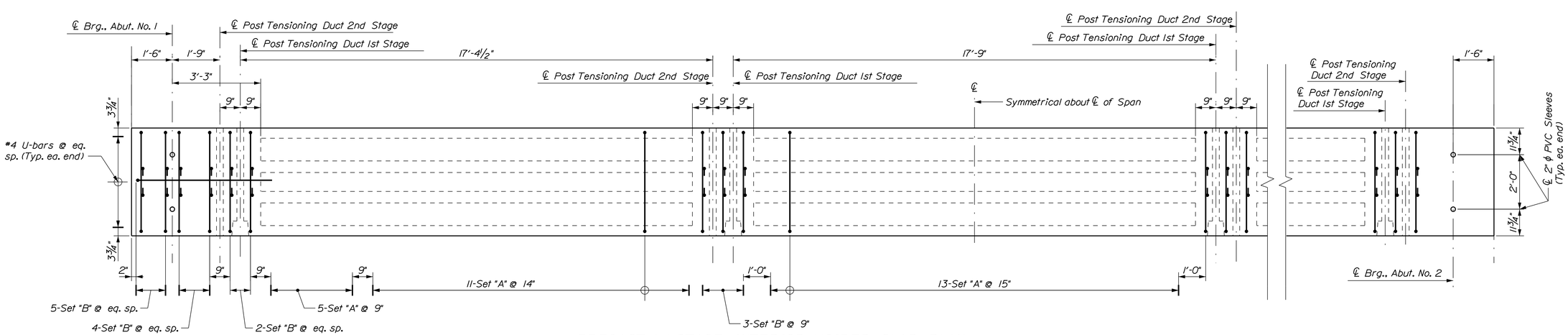

PRECAST 1st STAGE INTERIOR VOIDED SLAB PLAN

VOIDED SLAB S5

STATE OF MAINE
DEPARTMENT OF TRANSPORTATION

STP-2048(000)

WIN 20480.00

BRIDGE NO. 2117

BRIDGE PLANS

PROJ. MANAGER	M. WIGHT	BY	DATE
DESIGN-DETAILED	J. HASBROUCK	D. SULLIVAN	
CHECKED-REVIEWED	B. REEVES	W. ROHMAN	DEC 2015
DESIGN2-DETAILED2	L. KRUSINSKI	T. WHITE	JUN 2014
DESIGN3-DETAILED3	-----	W. ROHMAN	-----
REVISIONS 1	-----		-----
REVISIONS 2	-----		-----
REVISIONS 3	-----		-----
REVISIONS 4	-----		-----
FIELD CHANGES	-----		-----

SIGNATURE

P.E. NUMBER

DATE

CAIN BRIDGE
TWELVE MILE BROOK
CLINTON KENNEBEC COUNTY

PRECAST 1st STAGE
VOIDED SLAB PLAN

SHEET NUMBER

20

OF 27

Filename: ...\00\BRIDGE\MSTA\020_Precast.dgn Division: BRIDGE Username: David.Sullivan Date:1/7/2016

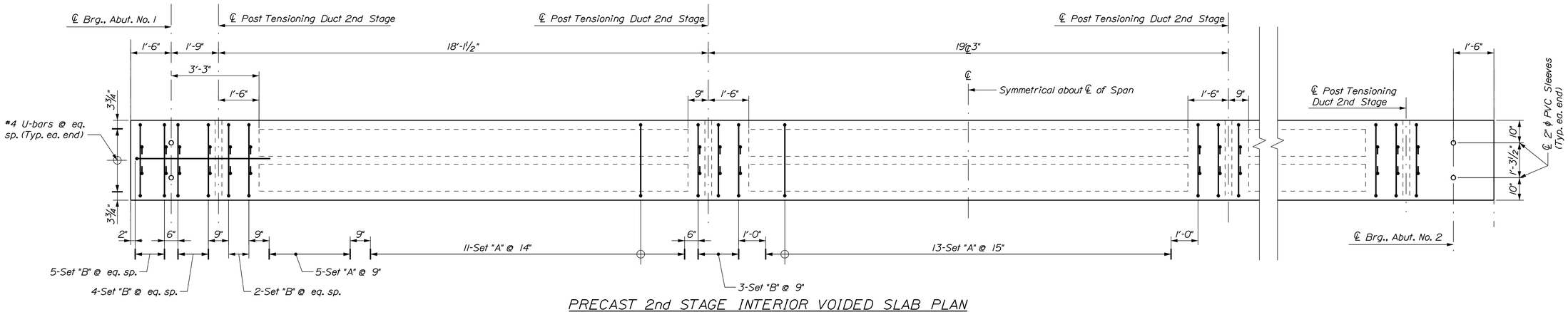

PRECAST 2nd STAGE INTERIOR VOIDED SLAB PLAN

VOIDED SLAB S6 & S7

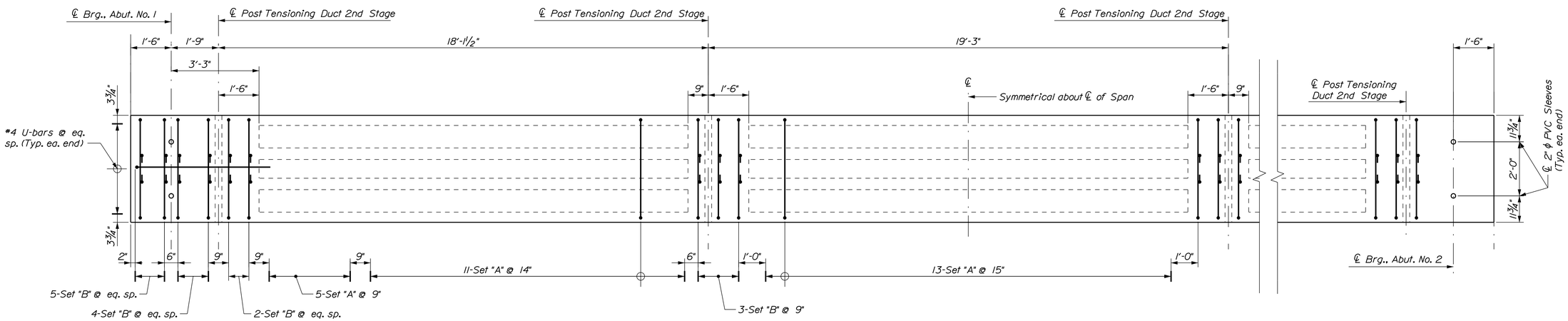

PRECAST 2nd STAGE INTERIOR VOIDED SLAB PLAN

VOIDED SLAB S8 & S9

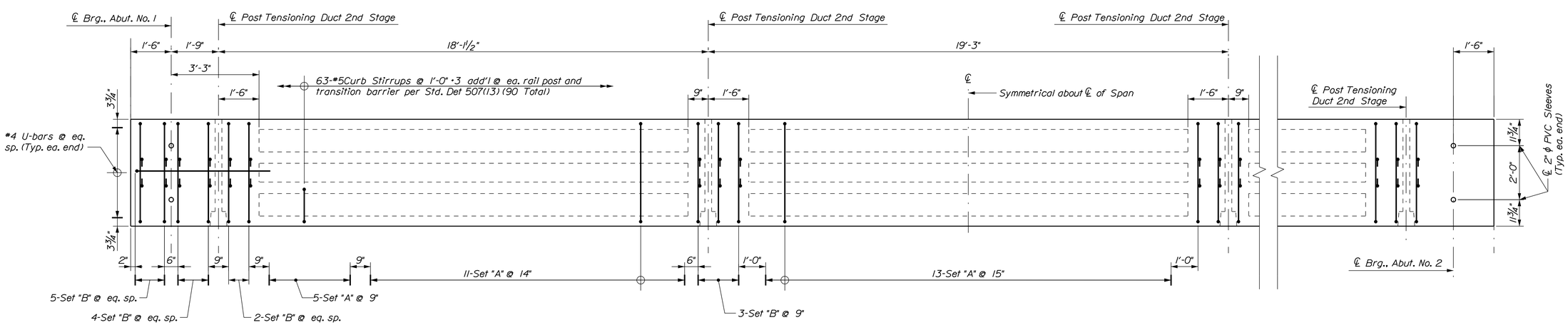

PRECAST 2nd STAGE EXTERIOR VOIDED SLAB PLAN

VOIDED SLAB S10

STATE OF MAINE
DEPARTMENT OF TRANSPORTATION

STP-2048(000)

WIN 20480.00

BRIDGE NO. 2117

BRIDGE PLANS

PROJ. MANAGER	M. WIGHT	BY	DATE
DESIGN-DETAILED	J. HASBROUCK	D. SULLIVAN	
CHECKED-REVIEWED	B. REEVES	W. ROHMAN	DEC 2015
DESIGN2-DETAILED2	L. KRUSINSKI	T. WHITE	JUN 2014
DESIGN3-DETAILED3	-----	W. ROHMAN	-----
REVISIONS 1	-----		-----
REVISIONS 2	-----		-----
REVISIONS 3	-----		-----
REVISIONS 4	-----		-----
FIELD CHANGES	-----		-----

SIGNATURE

P.E. NUMBER

DATE

CAIN BRIDGE
TWELVE MILE BROOK
CLINTON KENNEBEC COUNTY

PRECAST 2nd STAGE VOIDED SLAB PLAN

SHEET NUMBER

21

OF 27

Filename: ...\00\BRIDGE\MSTA\021_Precast.dgn Division: BRIDGE Username: David.Sullivan Date:1/7/2016

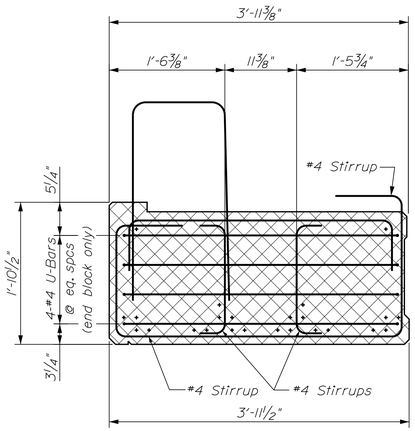

EXTERIOR TYPICAL VOIDED SLAB END SECTION

Showing Set "A" Reinforcing Modified

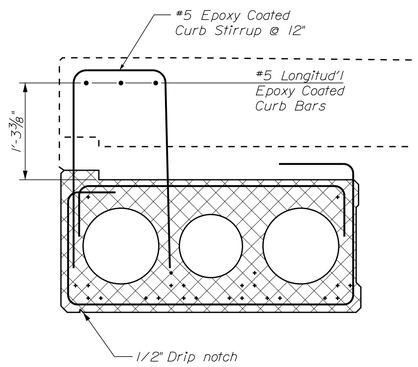

EXTERIOR VOIDED SLAB SECTION

PRECAST CONCRETE SUPERSTRUCTURE NOTES

1. Prestressing strands shall be 0.6-in. diameter. The tensioning force is 44 kips per prestressing strand.

2. Reinforcing steel shall have a minimum concrete cover of 2 inches unless otherwise noted.

3. Install a 1-in. diameter nonmetallic void drain in the bottom of each void at both ends.

4. The top surface of the prestressed voided slab beams shall be raked to a surface roughness of ? 1/4 inch.

5. The drilling of holes in the prestressed beams and the use of power actuated tools on the beams will not be permitted.

6. Neoprene pads shall be either polychloroprene or natural polyisoprene of 50? 5 Shore A durometer hardness, and shall conform to the requirements of Division 2, Section 18.2 of AASHTO Standard Specifications for Highway Bridges. Neoprene pads will not be paid for directly but will be considered incidental to related contract items.

7. Post tensioning shall be covered by a seamless polypropylene sheath, with corrosion inhibiting grease between the strands and sheath, for the full length of the strand except at the anchorage location.

8. The Contractor shall calibrate the jacking equipment as necessary to provide an anchorage of 38 to 41 kips after setting losses in each 0.6-in. diameter post tensioning strand.

9. Screed rails shall be installed to the elevation shown on the profile, adjusted for wearing course thickness and cross slope.

10. The 2"ϕ PVC sleeves at the end of each beam shall be removed after the beam is cast to leave a roughened surface for the grout to bond to.

11. The prestressing length for the first stage is too short to use strands. Submit a design for the first stage using an alternate such as DYWIDAG rods and 40 kips of tensile force per location.

12. Reinforcing that extends into the Structural Reinforced Leveling Slab shall be epoxy coated.

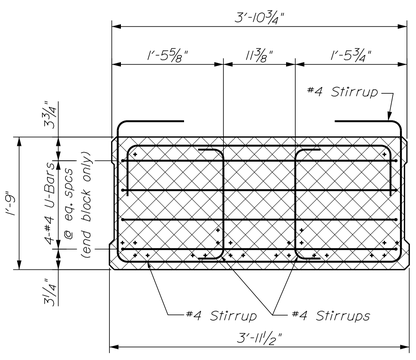

TYPICAL VOIDED SLAB END SECTION

Showing Set "B" Reinforcing Modified

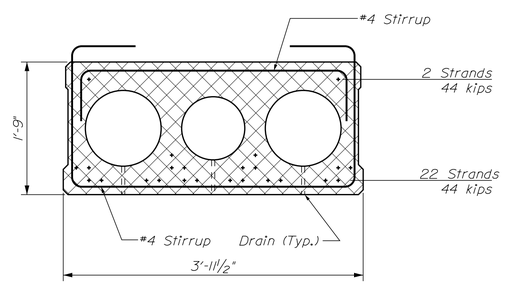

TYPICAL VOIDED SLAB SECTION

Showing Set "A" Reinforcing Modified
+ = 0.6" Strand - fully bonded
Voided Slab S2 thru S5, S8 & S9

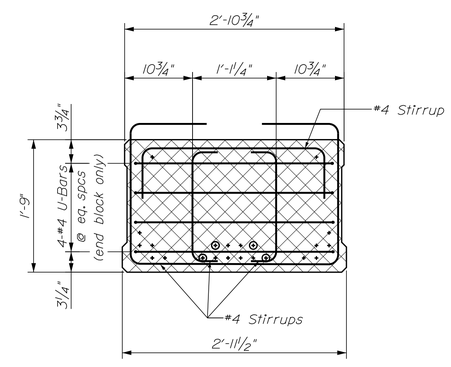

TYPICAL VOIDED SLAB END SECTION

Showing Set "B" Reinforcing Modified

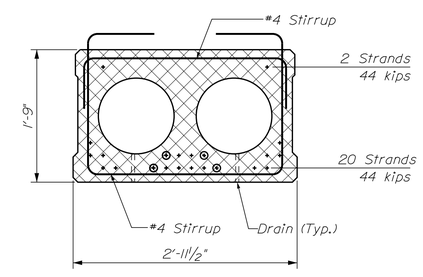

TYPICAL VOIDED SLAB SECTION

Showing Set "A" Reinforcing Modified
+ = 0.6" Strand - fully bonded
⊙ = 0.6" Strand - debonded 12'
Voided Slab S6 & S7

STATE OF MAINE
DEPARTMENT OF TRANSPORTATION

STP-2048(000)

WIN 20480.00

BRIDGE NO. 2117

BRIDGE PLANS

PROJ. MANAGER	M. WIGHT	BY	DATE
DESIGN-DETAILED	J. HASBROUCK	D. SULLIVAN	DEC 2015
CHECKED-REVIEWED	B. REEVES	W. ROHMAN	DEC 2015
DESIGN2-DETAILED2	L. KRUSINSKI	T. WHITE	JUN 2014
DESIGN3-DETAILED3	-----	W. ROHMAN	-----
REVISIONS 1	-----		-----
REVISIONS 2	-----		-----
REVISIONS 3	-----		-----
REVISIONS 4	-----		-----
FIELD CHANGES	-----		-----

SIGNATURE

P.E. NUMBER

DATE

CAIN BRIDGE
TWELVE MILE BROOK
CLINTON KENNEBEC COUNTY

PRECAST VOIDED SLAB SECTIONS

SHEET NUMBER

22

OF 27

Filename: ...\00\BRIDGE\MSTA\022_Precast.dgn Division: BRIDGE Username: David.Sullivan Date:1/7/2016

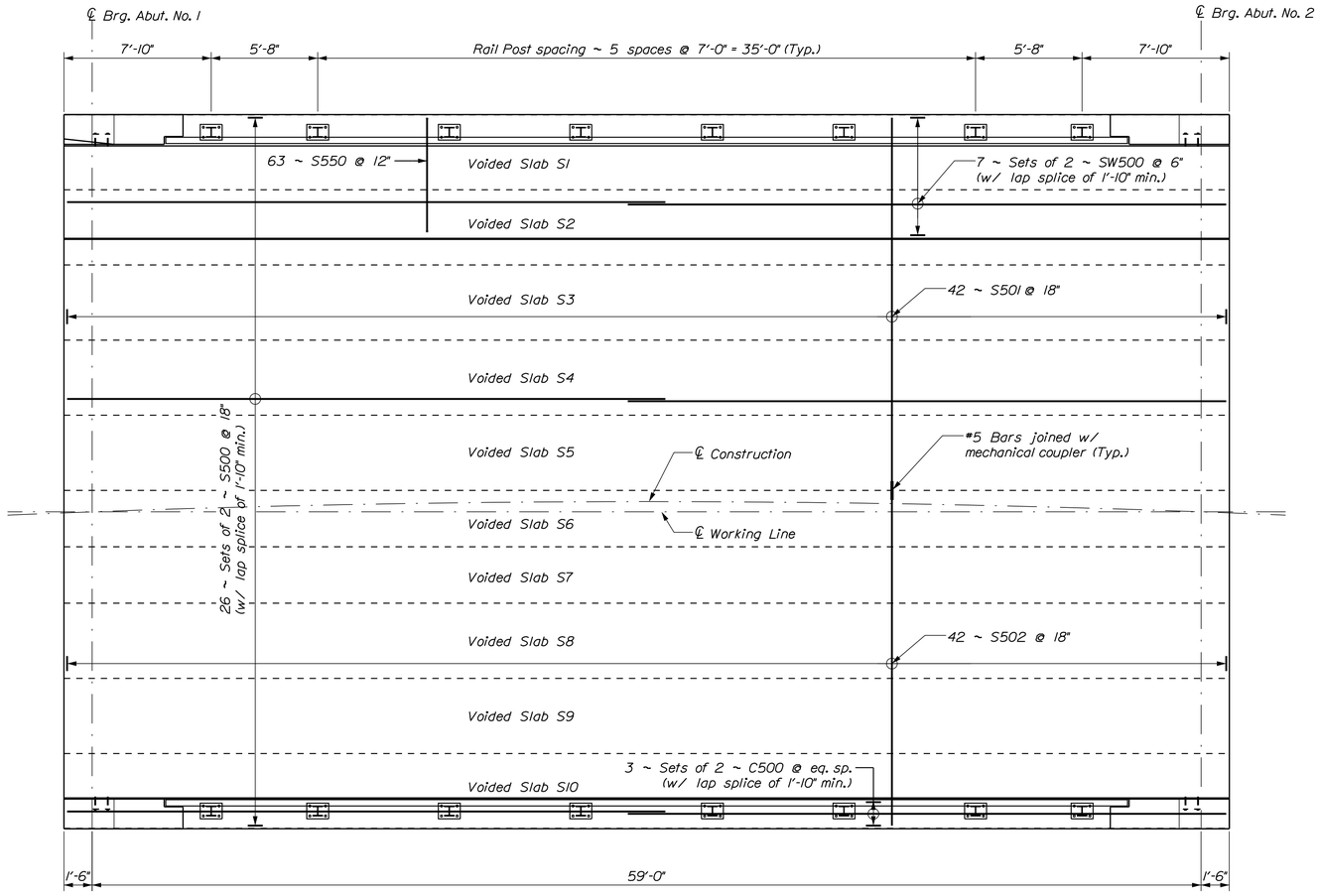

SUPERSTRUCTURE PLAN

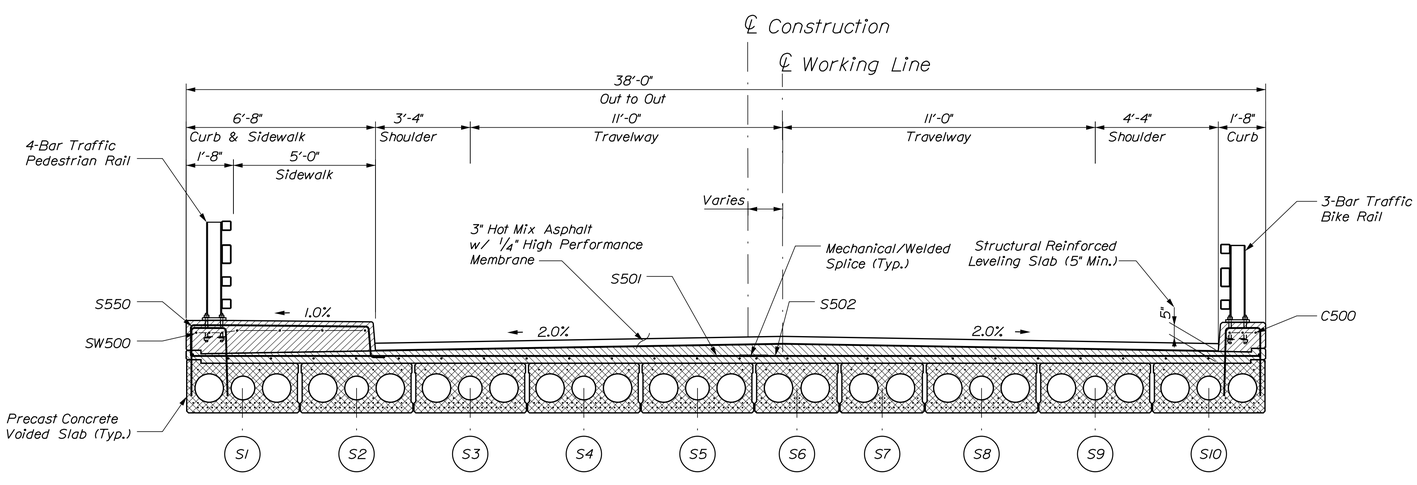

TYPICAL BRIDGE SECTION

Flow

SUPERSTRUCTURE NOTES

1. Reinforcing steel shall have a minimum concrete cover of 2 inches unless otherwise noted.

2. Form a one inch V-groove on the fascias at the horizontal joint between the curb and slab.

3. The superstructure slab concrete shall be placed continuously and shall be kept plastic until the entire placement has been made.

4. Prior to concrete placement provide additional stirrups in the curbs at each bridge railing post or transition barrier location, as shown in the Standard Detail.

5. The Contractor shall install Transition Barrier vertical closed stirrups, as shown in Standard Details Section 526, prior to the placement of the curb or sidewalk concrete.

6. Reinforcing steel in the cast-in-place concrete slab, curb, sidewalk, and transition barriers shall be epoxy coated.

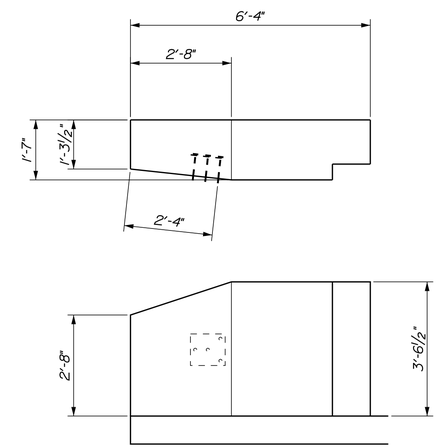

SOUTHWEST CORNER TRANSITION BARRIER MODIFICATION DETAIL

TRANSITION BARRIER NOTES

1. Use the anchorage and terminal connector for a W-beam guardrail shown in Standard Detail 606(23) for the modified transition barrier.

STATE OF MAINE
DEPARTMENT OF TRANSPORTATION

STP-2048(000)

WIN 20480.00

BRIDGE NO. 2117

BRIDGE PLANS

PROJ. MANAGER	M. WIGHT	BY	DATE
DESIGN-DETAILED	J. HASBROUCK	D. SULLIVAN	DEC 2015
CHECKED-REVIEWED	B. REEVES	W. ROHMAN	DEC 2015
DESIGN2-DETAILED2	L. KRUSINSKI	T. WHITE	JUN 2014
DESIGN3-DETAILED3	-----	W. ROHMAN	-----
REVISIONS 1	-----	-----	-----
REVISIONS 2	-----	-----	-----
REVISIONS 3	-----	-----	-----
REVISIONS 4	-----	-----	-----
FIELD CHANGES	-----	-----	-----

SIGNATURE

P.E. NUMBER

DATE

CAIN BRIDGE
TWELVE MILE BROOK
CLINTON KENNEBEC COUNTY

SUPERSTRUCTURE

SHEET NUMBER

23

OF 27

Filename: ...\MSTA\023_Superstructure.dgn Division: BRIDGE Username: David.Sullivan Date:1/7/2016

STRAIGHT BARS

MARK	QTY.	LENGTH	LOCATION
REINFORCING STEEL - BLACK ABUTMENT No. 1			
A402	6	7'-9"	Wingwall
A403	10	6'-4"	Wingwall
A404	10	4'-0"	Wingwall
A409	2	20'-0"	Horizontal
A410	2	23'-9"	Horizontal
A500	1	4'-4"	Wing Wall Horiz. N.F.
A501	1	6'-0"	Wing Wall Horiz. N.F.
A502	1	7'-7"	Wing Wall Horiz. N.F.
A503	1	9'-2"	Wing Wall Horiz. N.F.
A504	1	10'-10"	Wing Wall Horiz. N.F.
A505	1	12'-6"	Wing Wall Horiz. N.F.
A506	1	14'-0"	Wing Wall Horiz. N.F.
A507	1	15'-8"	Wing Wall Horiz. N.F.
A508	47	7'-6"	Vertical
A509	7	10'-0"	Vertical
A510	2	8'-8"	Parapet Vertical
A511	2	9'-2"	Parapet Vertical
A512	2	9'-8"	Parapet Vertical
A513	4	10'-2"	Parapet Vertical
A700	11	23'-9"	Abut. Horz N.F.
A701	20	14'-4"	Abut. Horz. F.F.
A702	11	7'-7"	Abut Horiz. F.F.
A703	1	4'-4"	Wing Wall Horiz. F.F.
A704	1	6'-0"	Wing Wall Horiz. F.F.
A705	1	7'-7"	Wing Wall Horiz. F.F.
A706	1	9'-2"	Wing Wall Horiz. F.F.
A707	1	10'-10"	Wing Wall Horiz. F.F.
A708	1	12'-6"	Wing Wall Horiz. F.F.
A709	1	14'-0"	Wing Wall Horiz. F.F.
A710	1	15'-8"	Wing Wall Horiz. F.F.
A711	8	16'-8"	Wing Wall Horiz. F.F.
A712	2	3'-8"	Parapet Horiz. Top
A713	2	3'-4"	Parapet Horiz. Top
A714	2	1'-9"	Parapet Horiz. Top
A800	1	23'-9"	Horiz. F.F.
A801	1	20'-0"	Horiz. F.F.
ABUTMENT No. 2			
B402	16	7'-2"	Wing Wall Vertical
B403	16	4'-6"	Wing Wall Vertical
B404	2	21'-11"	Horizontal Bottom
B405	2	19'-11"	Horizontal Bottom
B500	4	3'-11"	Wing Wall Horiz. N.F.
B501	4	6'-3"	Wing Wall Horiz. N.F.
B502	4	8'-7"	Wing Wall Horiz. N.F.
B503	4	10'-10"	Wing Wall Horiz. N.F.
B504	47	7'-8"	Vertical
B505	12	10'-0"	Vertical
B700	16	12'-8"	Wing Wall Horiz. F.F.
B701	4	3'-11"	Wing Wall Horiz. F.F.
B702	4	6'-3"	Wing Wall Horiz. F.F.
B703	4	8'-7"	Wing Wall Horiz. F.F.
B704	4	10'-10"	Wing Wall Horiz. F.F.

STRAIGHT BARS

MARK	QTY.	LENGTH	LOCATION
REINFORCING STEEL - EPOXY COATED SUPERSTRUCTURE			
S500	52	31'-10"	Longitudinal
S501	42	19'-8"	Transverse
S502	42	17'-9"	Transverse
SW500	14	31'-10"	Longitudinal
C500	6	31'-10"	Longitudinal

BENT BARS

MARK	QTY.	LENGTH	TYPE	A	B	C	D	E	F	G	H	O	R	LOCATION
REINFORCING STEEL - BLACK ABUTMENT No. 1														
A452	29	3'-0"	L	1'-6"	1'-6"									Vert., Anchor for Approach Slab
A453	15	3'-8"	SL		1'-6"	0'-8"	1'-6"							Horizontal., End of Wing Wall
A454	14	8'-0"	SL		3'-8"	0'-8"	3'-8"							Top of Wing Wall
A455	2	18'-0"	V				15'-2"	2'-10"			6.375'			Bottom of Wing Wall
A456	63	3'-8"	C	0'-6"	2'-8"	0'-6"								Hook around Pile Tops
A550	8	4'-10"	L	3'-0"	1'-10"									Horizontal Wing Wall
A551	4	18'-6"	L	16'-8"	1'-10"									Horizontal Wing Wall
A552	29	8'-5"	L	6'-11"	1'-6"									Vert., Approach Slab Bump-out
A553	99	5'-8"	SL		1'-6"	2'-8"	1'-6"							Vert. Top & Btm of Abut & Horz Side
A554	2	4'-0"	V				3'-4"	0'-8"			1.49'			Top of Parapet
A750	11	21'-2"	L	20'-0"	1'-2"									Horizontal Abutment Downstream
A850	10	16'-0"	L	12'-7"	3'-4"									Horizontal Abutment Upstream
A851	10	19'-0"	L	15'-7"	3'-4"									Horizontal Abutment Downstream
A852	11	13'-2"	M			3'-6"	6'-2"	3'-6"			2.479'			Horizontal Abutment Downstream
A853	4	12'-0"	SJ	3'-6"	2'-8"	2'-6"	1'-10"	1'-6"						Horizontal Abutment Downstream
ABUTMENT No. 2														
B452	29	3'-0"	L	1'-6"	1'-6"									Vert., Anchor for Approach Slab
B453	28	3'-8"	S		1'-6"	0'-8"	1'-6"							Horizontal., End of Wing Wall
B454	20	8'-0"	S		3'-8"	0'-8"	3'-8"							Top of Wing Wall
B455	4	14'-7"	V				2'-9"	11'-10"			6.41'			Bottom of Wing Wall
B456	48	3'-8"	C	0'-6"	2'-8"	0'-6"								Hook around Pile Tops
B550	16	4'-10"	L	3'-0"	1'-10"									Horizontal Wing Wall
B551	8	14'-6"	L	12'-8"	1'-10"									Horizontal Wing Wall
B552	29	8'-5"	L	6'-11"	1'-6"									Vert., Approach Slab Bump-out
B553	88	5'-8"	S		1'-6"	2'-8"	1'-6"							Vert., Top & Bottom Abutment
B750	11	23'-2"	L	22'-0"	1'-2"									Horizontal Abutment Upstream
B751	11	21'-2"	L	20'-0"	1'-2"									Horizontal Abutment Downstream
B850	10	15'-10"	L	12'-6"	3'-4"									Horizontal Abutment Upstream
B851	10	18'-11"	L	15'-7"	3'-4"									Horizontal Abutment Downstream
B852	22	13'-2"	M			3'-6"	6'-3"	3'-6"			2.48'			Horizontal Abutment Upstream
B853	8	12'-0"	SJ	3'-8"	2'-8"	2'-6"	1'-10"	1'-6"						Horizontal Abutment Downstream
REINFORCING STEEL - EPOXY COATED SUPERSTRUCTURE														
S550	63	8'-10'	SC		1'-1"	6'-3"	1'-1"			0'-6"		6'-4"		Sidewalk Transverse

TYPE - BENDING DIAGRAMS

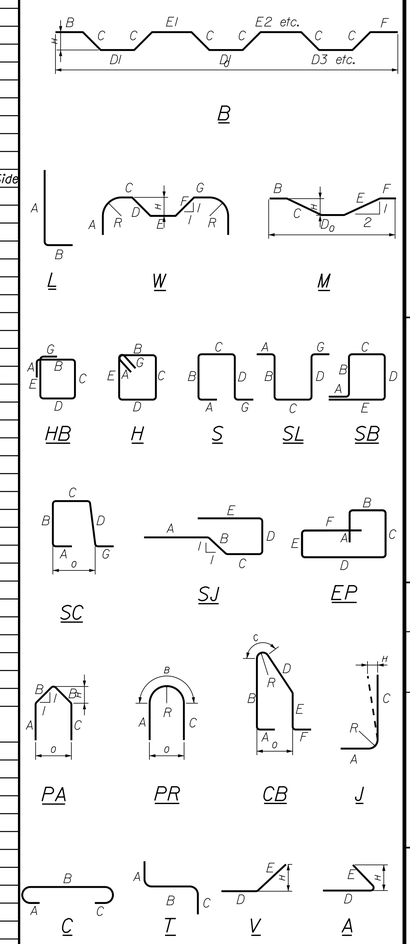

All dimensions are out-to-out of bar.

Bending details and hooks shall conform to the recommendations of the current revision of ACI Standard 315 and ACI Standard 318.

Reinforcing Bar: ASTM A615/A615M, Grade 60

GENERAL NOTES

1. The first two digits following the letter(s) of the mark indicate the size ofthe bar:

   Mark "A502" = bar size #5
   Mark "P805" = bar size #8
   Mark "S650" = bar size #6

2. Each crank bar, Type B, may be replaced by two (2) straight bars (one top and one bottom) of the same bar size as the crank bar. Payment in either case shall be based on crank bars as schedule on the plans.

STATE OF MAINE
DEPARTMENT OF TRANSPORTATION

STP-2048(000)

WIN 20480.00

BRIDGE PLANS

BRIDGE NO. 2117

PROJ. MANAGER	M. WIGHT	BY	DATE
DESIGN-DETAILED	J. HASBROUCK	D. SULLIVAN	DEC 2015
CHECKED-REVIEWED	B. REEVES	W. ROHMAN	JUN 2014
DESIGN2-DETAILED2	L. KRUSINSKI	T. WHITE	-----
DESIGN3-DETAILED3	-----	W. ROHMAN	-----
REVISIONS 1	-----		-----
REVISIONS 2	-----		-----
REVISIONS 3	-----		-----
REVISIONS 4	-----		-----
FIELD CHANGES	-----		-----

SIGNATURE

P.E. NUMBER

DATE

CAIN BRIDGE
TWELVE MILE BROOK
CLINTON KENNEBEC COUNTY

REINFORCING STEEL SCHEDULE

SHEET NUMBER

24

OF 27

Filename: ...\00\BRIDGE\MSTA\024_Rebar.dgn Division: BRIDGE Username: David.Sullivan Date:1/7/2016

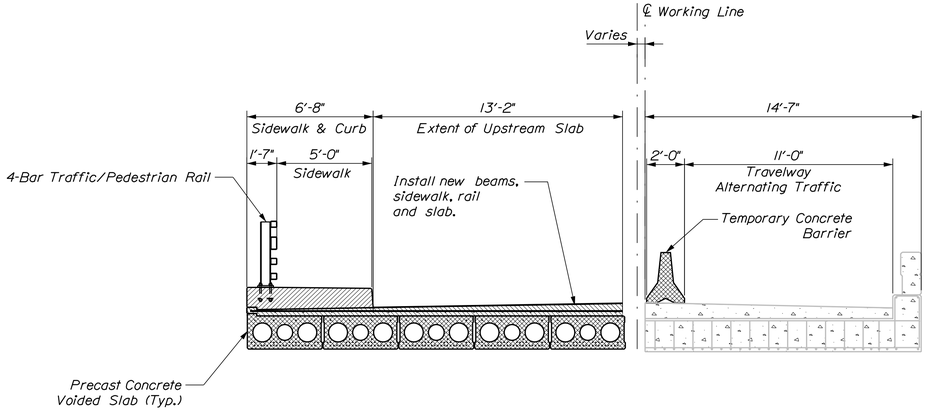

Stage 1

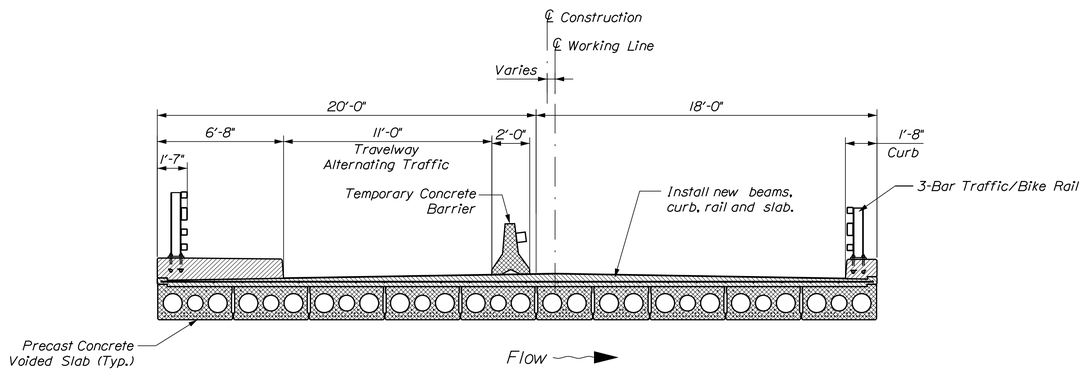

Stage 2

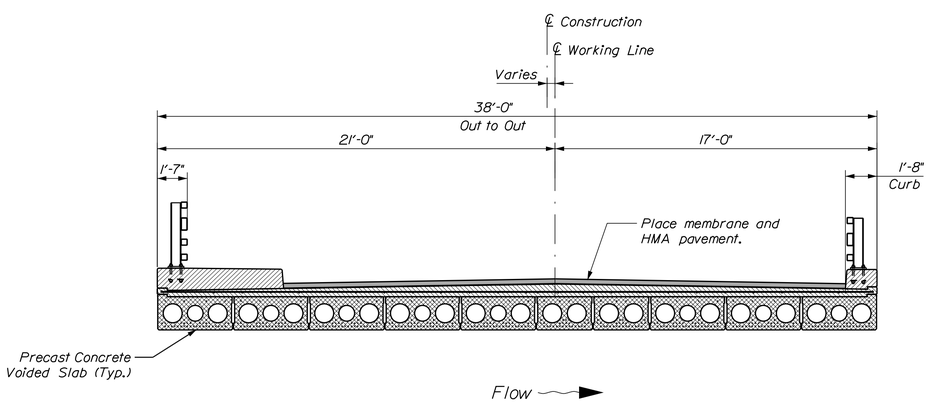

Stage 3

STAGED CONSTRUCTION NOTES:

Stage 1 - Construct one 11'-0" travel lane for alternating two-way traffic on Downstream side. Saw cut and remove existing bridge on Upstream side. Install Precast Concrete Voided Slabs on Upstream side. Place first half of structural concrete slab. Place sidewalk and install 4-Bar Traffic/Pedestrian Bridge Rail.

Stage 2 - Construct one 11'-0" travel lane for alternating two-way traffic on Upstream side. Remove remainder of existing bridge. Install Precast Concrete Voided Slabs on Downstream side. Place remainder of structural concrete slab. Place curb and install 3-Bar Traffic Rail.

Stage 3 - Install high-performance waterproofing membrane and HMA pavement, keeping one lane open at all times.

1. On the existing bridge, positively attach the temporary concrete barrier to the deck or link it in one rigid unit over the bridge. On the new bridge deck, attach the temporary concrete barrier sections together in a rigid unit over the bridge. When linking the barrier together in a rigid unit, follow the details in State of New York Department of Transportation U.S. Customary Standard Sheet 619-01 (Temporary Concrete Barrier) Sheet 3 of 3. This document can currently be found at https://www.dot.ny.gov/main/business-center/engineering/cadd-info/drawings/standard-sheets-us-repository/619-01_01061le2.pdf

STATE OF MAINE
DEPARTMENT OF TRANSPORTATION

STP-2048(000)

WIN 20480.00

BRIDGE NO. 2117

BRIDGE PLANS

		BY	DATE
PROJ. MANAGER	M. WIGHT		
DESIGN-DETAILED	J. HASBROUCK	D. SULLIVAN	DEC 2015
CHECKED-REVIEWED	B. REVES	W. ROHMAN	
DESIGN2-DETAILED2	L. KRUSINSKI	T. WHITE	JUN 2014
DESIGN3-DETAILED3	-----	W. ROHMAN	-----
REVISIONS 1	-----		-----
REVISIONS 2	-----		-----
REVISIONS 3	-----		-----
REVISIONS 4	-----		-----
FIELD CHANGES	-----		-----

SIGNATURE

P.E. NUMBER

DATE

CAIN BRIDGE
TWELVE MILE BROOK
CLINTON KENNEBEC COUNTY

STAGED CONSTRUCTION PLANS

SHEET NUMBER
25
OF 27

Filename: ...\MSTA\025_StageConstr.dgn Division: BRIDGE Username: David.Sullivan Date:1/7/2016

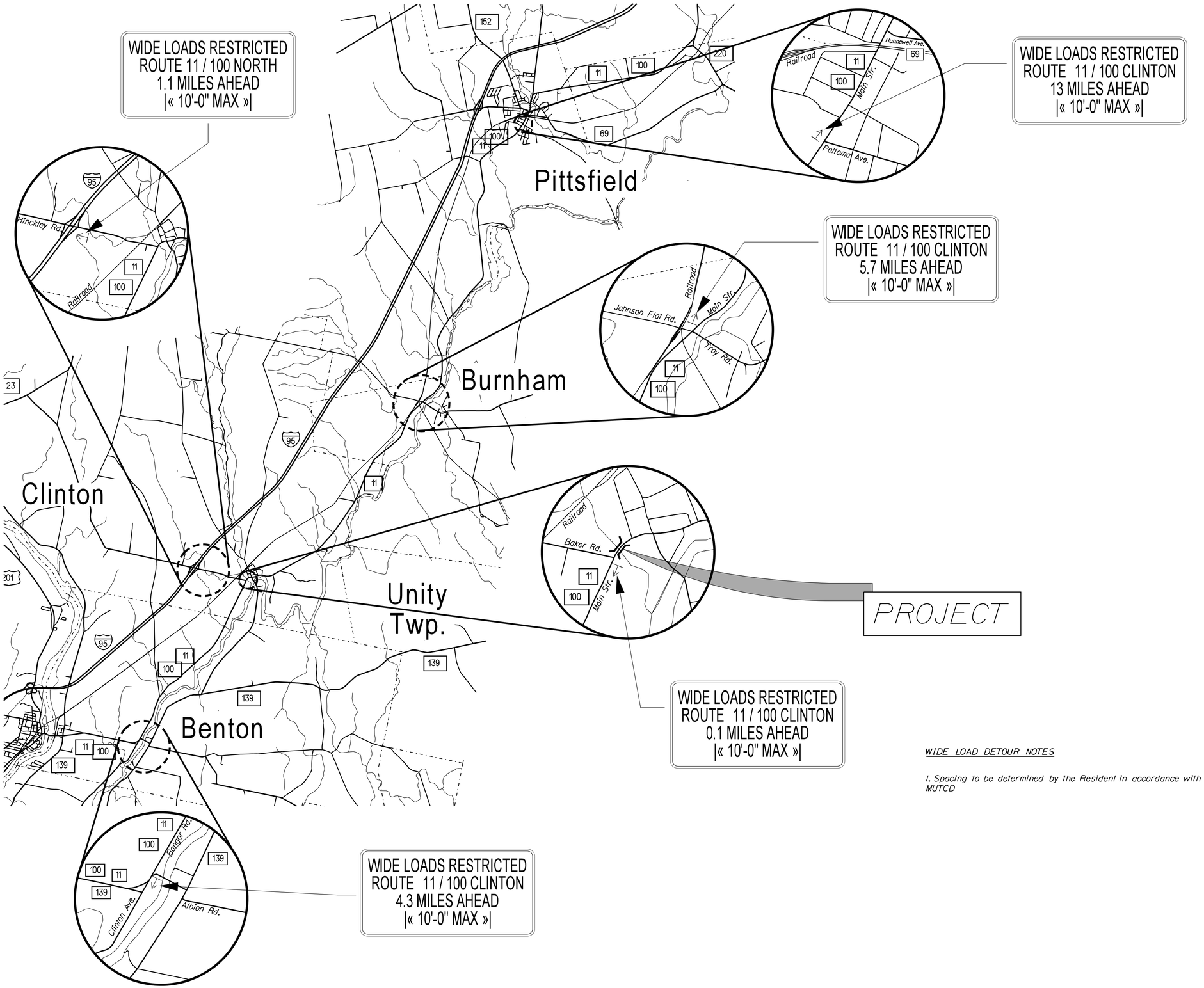

WIDE LOAD DETOUR NOTES

1. Spacing to be determined by the Resident in accordance with MUTCD

STATE OF MAINE
DEPARTMENT OF TRANSPORTATION

STP-2048(000)

WIN 20480.00

BRIDGE NO. 2117

BRIDGE PLANS

		BY	DATE
PROJ. MANAGER	M. WIGHT		
DESIGN-DETAILED	J. HASBROUCK	D. SULLIVAN	
CHECKED-REVIEWED	B. REEVES	W. ROHMAN	DEC 2015
DESIGN2-DETAILED2	L. KRUSINSKI	T. WHITE	JUN 2014
DESIGN3-DETAILED3	-----	W. ROHMAN	-----
REVISIONS 1	-----		-----
REVISIONS 2	-----		-----
REVISIONS 3	-----		-----
REVISIONS 4	-----		-----
FIELD CHANGES	-----		-----

SIGNATURE

P.E. NUMBER

DATE

CAIN BRIDGE
TWELVE MILE BROOK
CLINTON KENNEBEC COUNTY

WIDE LOAD DETOUR PLAN

SHEET NUMBER

26

OF 27

Filename: ...\BRIDGE\MSTA\026_DetourPlan.dgn Division: BRIDGE Username: David.Sullivan Date:1/7/2016

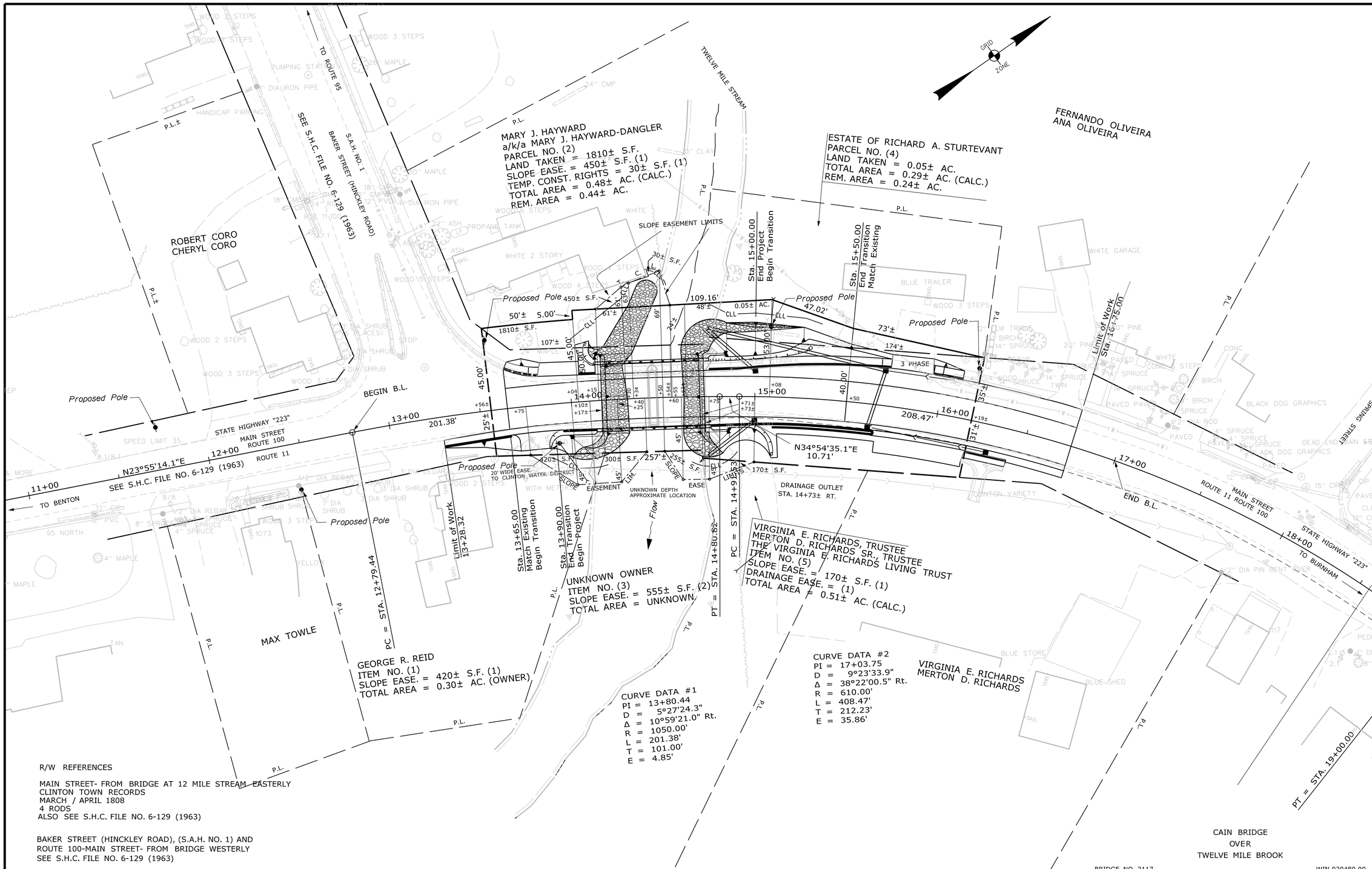

R/W REFERENCES

MAIN STREET- FROM BRIDGE AT 12 MILE STREAM EASTERLY
CLINTON TOWN RECORDS
MARCH / APRIL 1808
4 RODS
ALSO SEE S.H.C. FILE NO. 6-129 (1963)

BAKER STREET (HINCKLEY ROAD), (S.A.H. NO. 1) AND
ROUTE 100-MAIN STREET- FROM BRIDGE WESTERLY
SEE S.H.C. FILE NO. 6-129 (1963)

THIS PLAN WAS PREPARED IN CONNECTION WITH THE DEPARTMENT'S ACQUISITION OF REAL PROPERTY FOR TRANSPORTATION PURPOSES.IT CANNOT BE USED OR RELIED UPON TO ESTABLISH LEGAL BOUNDARIES BETWEEN ABUTTING PROPERTY OWNERS.

SYMBOLS

- ● IP or ● IPF (IRON PIPE or PIN FOUND)
- ☐ S.T. (SEPTIC TANK)
- ☐ (ROW MONUMENT)
- ▲BM (TRAVERSE POINT)
- WELL (WELL)
- GROUNDING UNIT LINE
- CONSTRUCTION LIMIT LINE
- PROPERTY LINE
- LIMITS OF VEGETATION (L.O.V.P.)
- EXISTING RIGHT OF WAY
- NEW RIGHT OF WAY
- NEW ROW WITHIN EXIST. ROW
- CONTROL OF ACCESS

ITEM	TECH	CHECKED
BASE MAP		
EXIST. R/W	D.W.B.	
PROP. LINES	D.W.B.	
AREAS	D.W.B.	P.N.S.

STATE OF MAINE
DEPARTMENT OF TRANSPORTATION
16 STATE HOUSE STATION - AUGUSTA, ME 04333-0016

CLINTON
RIGHT OF WAY MAP

REVISIONS

NO.	DATE	DESCRIPTION	BY

PLAN FILED IN PLAN BOOK PAGE COUNTY RECORD

NO.	GRANTOR	INSTRUMENT	DATE	BOOK	PAGE
		COND.	12/28/15	12192	287

DAVID BERNHARDT
COMMISSIONER
JOYCE NOEL TAYLOR
CHIEF ENGINEER
DATE

STATE HIGHWAY "223"
ROUTES 11 / 100 MAIN STREET
CLINTON KENNEBEC COUNTY
FEDERAL AID PROJECT NO. STP-2048(000)

OCTOBER 2015 | RIGHT-OF-WAY MAP | D.O.T. FILE NO. 6-460
SCALE 1" = 25' | SHEET 1 OF 1

SHEET NUMBER
27
OF 27

Filename: ...\00\ROW\MSTA\001_RWPLAN1.dgn Division: BRIDGE Username: David.Sullivan Date:1/7/2016