STATE OF MAINE
DEPARTMENT OF TRANSPORTATION

SPECIFICATIONS

Design: Load and Resistance Factor Design per AASHTO LRFD Bridge Design Specifications, Seventh Edition 2014 with 2015 Interim Revisions.

DESIGN LOADING

Live Load ..... HL - 93 Modified for Strength I

TRAFFIC DATA

Current (2015) AADT	4210
Future (2035) AADT	5050
DHV - % of AADT	10
Design Hour Volume	505
Heavy Trucks (% of AADT)	12
Heavy Trucks (% of DHV)	8
Directional Distribution (% of DHV)	64
18 kip Equivalent P 2.0	393
18 kip Equivalent P 2.5	375
Design Speed (mph)	40

HYDROLOGIC DATA

Drainage Area	113 sq mi
Design Discharge (Q50)	6770 cfs
Check Discharge (Q100)	7990 cfs
Headwater Elevation (Q1.1)	307.31 ft
Headwater Elevation (Q25)	311.99 ft
Headwater Elevation (Q50)	312.97 ft
Headwater Elevation (Q100)	313.93 ft
Velocity (Q1.1)	7.00 fps
Velocity (Q50)	11.02 fps
Velocity (Q100)	11.23 fps

MATERIALS

Concrete:	
Curbs & Transition Barriers	Class "LP"
Seals	Class "S"
All Other	Class "A"
Reinforcing Steel	
Plain	ASTM A 615/A 615M, Grade 60
Epoxy Coated	ASTM A 775/A 775M, Grade 60
Structural Steel:	
All Material (except as noted)	ASTM A 709, Grade 50W (unpainted)
High Strength Bolts	ASTM A 325, Type 3

BASIC DESIGN STRESSES

Concrete	f 'c = 4,000 psi
Reinforcing Steel	f y = 60,000 psi
Structural Steel:	
ASTM A 709, Grade 50W	F y = 50,000 psi
ASTM A 709, Grade 50	F y = 50,000 psi
ASTM 572, Grade 50	F y = 50,000 psi
ASTM A 709, Grade 36	F y = 36,000 psi
ASTM A 325	F u = 120,000 psi

UTILITIES

Central Maine Power Company (CMP)
Comcast
Fairpoint Communications

MAINTENANCE OF TRAFFIC

Traffic will be maintained using an on-site 2-lane temporary detour bridge.

WATERBORO / LIMERICK
YORK COUNTY
STIMSON BRIDGE
OVER
LITTLE OSSIPEE RIVER
STATE ROUTE 5 (SOKOKIS TRAIL)
PROJECT NO. STP-2047(600)
PROJECT LENGTH 0.14 mi.
BRIDGE NO. 2807

LIST OF DRAWINGS

Title Sheet 1
Estimated Quantities 2
General Construction Notes 3
General Plan 4
Profile 5
Boring Location Plan & Interpretive Subsurface Profile 6
Boring Logs 7-8
Signing and Striping Plan 9
Approach Typical Sections 10
Bridge Typical Sections 11
Cross Sections 12-22
Abutment No. 1 Plan and Elevation 23
Abutment No. 1 Reinforcement 24
Abutment No. 2 Plan and Elevation 25
Abutment No. 2 Reinforcement 26
Miscellaneous Details 27
Pier Seal and Footing 28
Pier Plan 29
Pier Reinforcement 30
Bearing Details 31
Framing Plan 32
Girder Details 33-34
Superstructure Plan 35
Superstructure Details 36-37
Reinforcing Steel Schedule 38-39
Right-of-Way Map 40-41

PROJECT LOCATION:	On State Route 5 (Sokokis Trail), on the Town Line between Waterboro and Limerick, over Little Ossipee River Lat./Long. 43°39'10.4" N 70°45'38.1" W
PROGRAM AREA:	Bridge Program
OUTLINE OF WORK:	Bridge Replacement

Hoyle, Tanner & Associates, Inc.
www.hoyletanner.com

WIN 20476.00

STP-2047(600)

STATE OF MAINE
DEPARTMENT OF TRANSPORTATION

	DATE
APPROVED	
COMMISSIONER:	4/28/16
CHIEF ENGINEER:	4-28-16

STATE OF MAINE · AARON M. LACHANCE No. 13294 · LICENSED PROFESSIONAL ENGINEER

PROJECT INFORMATION		
PROGRAM	Bridge Program	
PROJECT MANAGER	Mark Parlin	
DESIGNER	AARON LACHANCE	SIGNATURE
CONSULTANT	HOYLE, TANNER & ASSOC.	13294 P.E. NUMBER
PROJECT RESIDENT		April 19, 2016
CONTRACTOR		DATE
PROJECT COMPLETION DATE		

WATERBORO-LIMERICK
ME ROUTE 5

TITLE SHEET

SHEET NUMBER
1
OF 41

Filename:\00\BRIDGE\MSTA\001_Title.dgn Division: BRIDGE Username: common Date:4/19/2016

ESTIMATED QUANTITIES - SECTION 1

ITEM NO.	ITEM DESCRIPTION		QUANTITY	UNIT
202.19	Removing Existing Bridge	(740 CY)	1	LS
202.202	Removing Pavement Surface		530	SY
203.20	Common Excavation		1900	CY
203.2318	Disposal of Special Waste		360	T
203.25	Granular Borrow		780	CY
206.082	Structural Earth Excavation - Major Structures		745	CY
206.10	Structural Earth Excavation - Piers		145	CY
206.11	Structural Rock Excavation - Piers		50	CY
304.10	Aggregate Subbase Course - Gravel		1700	CY
403.208	Hot Mix Asphalt 12.5 mm HMA Surface		30	T
403.2081	12.5 mm Polymer Modified HMA		255	T
403.209	Hot Mix Asphalt 9.5 mm (Incidentals)		5	T
403.211	Hot Mix Asphalt (Shim)		50	T
403.213	Hot Mix Asphalt 12.5 mm Base		230	T
403.2131	12.5 mm Polymer Modified HMA Base		315	T
409.15	Bituminous Tack Coat - Applied		140	G
461.131	Temporary Pavement		430	T
501.50	Steel H-Beam Piles 89 lbd/ft, Delivered		210	LF
501.502	Rock-Socketed H-Piles 89 lbs/ft, In Place		210	LF
501.804	Drilling Equipment Mobilization, Rock-Socketed H-Piles		1	LS
502.219	Structural Concrete, Abutment and Retaining Walls	(177 CY)	1	LS
502.239	Structural Concrete Piers	(126 CY)	1	LS
502.24	Structural Concrete Piers (Placed Under Water)		145	CY
502.26	Structural Concrete Roadway and Sidewalk Slabs on Steel Bridge	(142 CY)	1	LS
502.31	Structural Concrete Approach Slabs	(26 CY)	1	LS
502.49	Structural Concrete Curbs and Sidewalks	(22 CY)	1	LS
503.12	Reinforcing Steel, Fabricated and Delivered		54155	LB
503.13	Reinforcing Steel, Placing		54155	LB
503.14	Epoxy-Coated Reinforcing Steel, Fabricated and Delivered		1125	LB
503.15	Epoxy-Coated Reinforcing Steel, Placing		1125	LB
504.702	Structural Steel Fabricated and Delivered, Welded	(207,300 LB)	1	LS
504.71	Structural Steel Erection	(207,300 LB)	1	LS
504.906	Rock Dowel	(20 EA)	1	LS
505.08	Shear Connectors	(3,585 EA)	1	LS
507.0821	Steel Bridge Railing, 3 Bar	(342 LF)	1	LS
508.14	High Performance Waterproofing Membrane	(570 SY)	1	LS
510.10	Special Detour, 24 Foot Roadway Width, Vehicular and Pedestrian Traffic not Separated		1	LS
511.07	Cofferdam (Pier)		1	LS
514.06	Curing Box For Concrete Cylinder		1	EA
515.21	Protective Coating For Concrete Surfaces	(201 SY)	1	LS
520.232	Expansion Device - Asphaltic Plug Joint		76	LF
523.52	Bearing Installation		5	EA

ESTIMATED QUANTITIES - SECTION 1

ITEM NO.	ITEM DESCRIPTION	QUANTITY	UNIT
523.5402	Laminated Elastomeric Bearings, Expansion	5	EA
526.34	Permanent Concrete Transition Barrier	4	EA
603.16	15" Culvert Pipe Option I	90	LF
603.179	18" Culvert Pipe Option III	96	LF
606.1721	Bridge Transition - Type I	4	EA
606.23	Guardrail Type 3C - Single Rail	312.5	LF
606.231	Guardrail Type 3C - 15' Radius and Less	37.5	LF
606.232	Guardrail Type 3C - Over 15' Radius	37.5	LF
606.265	Terminal End - Single Rail - Galvanized Steel	2	EA
606.353	Reflectorized Flexible Guardrail Marker	8	EA
606.79	Guardrail 350 Flared Terminal	2	EA
609.31	Curb Type 3	165	LF
610.08	Plain Riprap	15	CY
610.16	Heavy Riprap	1060	CY
610.18	Stone Ditch Protection	180	CY
613.319	Erosion Control Blanket	450	SY
615.07	Loam	125	CY
618.14	Seeding Method Number 2	16	UN
619.1201	Mulch - Plan Quantity	16	UN
619.1401	Erosion Control Mix - Plan Quantity	50	CY
620.58	Erosion Control Geotextile	1650	SY
620.661	Drainage Geocomposite	95	SY
627.733	4" White or Yellow Painted Pavement Marking Line	2150	LF
627.75	White or Yellow Pavement and Curb Marking	45	SF
627.76	Temporary Pavement Marking Line, White or Yellow	1	LS
629.05	Hand Labor, Straight Time	80	HR
631.12	All Purpose Excavator (Including Operator)	80	HR
631.14	Grader (Including Operator)	20	HR
631.172	Truck - Large (Including Operator)	40	HR
631.18	Chain Saw Rental (Including Operator)	5	HR
631.20	Stump Chipper (Including Operator)	5	HR
631.22	Front End Loader (Including Operator)	20	HR
637.071	Dust Control	1	LS
639.18	Field Office, Type A	1	EA
652.312	Type III Barricade	8	EA
652.33	Drum	50	EA
652.34	Cone	100	EA
652.35	Construction Signs	475	SF
652.361	Maintenance of Traffic Control Devices	1	LS
652.38	Flagger	1000	HR
656.75	Temporary Soil Erosion and Water Pollution Control	1	LS
659.10	Mobilization	1	LS

STATE OF MAINE
DEPARTMENT OF TRANSPORTATION

STP-2047(600)

WIN 20476.00

BRIDGE NO. 2807

BRIDGE PLANS

Hoyle, Tanner & Associates, Inc.
www.hoyletanner.com

PROJ. MANAGER	M. PARLIN	BY	DATE
DESIGN-DETAILED	RSW	PBD	APR 2016
CHECKED-REVIEWED	JCR	AML	APR 2016
DESIGN2-DETAILED2	BKM	BKM	APR 2016
DESIGN3-DETAILED3			
REVISIONS 1			
REVISIONS 2			
REVISIONS 3			
REVISIONS 4			
FIELD CHANGES			

STIMSON BRIDGE
LITTLE OSSIPEE RIVER
WATERBORO-LIMERICK YORK COUNTY

ESTIMATED QUANTITIES

SHEET NUMBER
2
OF 41

Filename: ...\BRIDGE\MSTA\002_Quantities.dgn Division: BRIDGE Username: common Date:4/26/2016

GENERAL CONSTRUCTION NOTES

1. All utility facilities shall be adjusted by the respective utilities unless otherwise noted.

2. The location of the existing utilities and drainage shown on the plans and cross sections were compiled from field survey and various sources. Locations are approximate and not guaranteed to be accurate nor is it guaranteed that all utilities are shown. No separate or additional compensation will be allowed to the Contractor due to any variance between the data shown on the plans and the actual field conditions encountered.

3. For easement, construction limits and right of way, refer to Right of Way Map.

4. Place a 24 inch wide strip of Temporary Erosion Control Blanket on the side slopes along the top of the riprap and behind the wingwalls.

5. All embankment materials, except as otherwise shown, placed below the Approach Slabs, shall be Granular Borrow meeting the requirements of Subsection 703.19, Material for Underwater Backfill.

6. All clearing will be completed by MaineDOT prior to the start of the project. If additional clearing is required by the Contractor, it shall be paid for with the appropriate equipment rental and hourly labor Contract items.

7. All new or reconstructed sideslopes not constructed with riprap shall have loam placed 2 inches deep, unless directed otherwise by the Resident.

8. Do not excavate for Aggregate Subbase Course where existing material is suitable as determined by the Resident.

9. In areas where the Resident directs the Contractor not to excavate to the subgrade line shown on the plans, payment for removing existing pavement, grubbing, shaping, ditching, and compacting the existing subbase and layers of new subbase 6 inches or less thick will be made under appropriate equipment rental items.

10. An NCHRP350 compliant guardrail end treatment shall be installed concurrently with the placement of each section of beam guardrail, unless otherwise shown.

11. Extended-use Erosion Control Blanket, seeded gutters, riprap downspouts, and other gutters lined with Stone Ditch Protection shall be constructed after paving and shoulder work is completed, where it is apparent that runoff will cause continual erosion. Payment will be made under the appropriate Contract items.

12. Protective Coating for Concrete Surfaces shall be applied to the following areas:

- All exposed surfaces of concrete curbs.
- Fascias down to the drip notch.
- All exposed surfaces of concrete transition barriers

13. Erosion Control Mix may be substituted in those areas normally receiving loam and seed as directed by the Resident. Placement shall be in accordance with Standard Specification 619, Mulch. Payment will be made under item 619.1401, Erosion Control Mix.

14. Place riprap on sideslopes up to elevation 313, or higher, as shown on the Contract Drawings.

15. Construct the riprap shelf at each abutment to the elevations shown on the Contract Drawings.

16. Project information referred to below may be accessed at the following MaineDOT web address: http://www.maine.gov/mdot/contractors/.

17. The existing bridge plans may be accessed at the MaineDOT web address. The plans are reproductions of the original drawings as prepared for the construction of the bridge. It is very unlikely that the plans will show any construction field changes and alterations which may have been made to the bridge during its life span.

18. The hydrologic report of the bridge site may be accessed at the MaineDOT web address. The hydrologic report is based on MaineDOT's interpretation of the information obtained for the subject site. No assurance is given that the information or the conclusions of the report will be representative of actual conditions at the time of construction.

19. The project geotechnical report titled: Geotechnical Design Report for the Replacement of Stimson Bridge Route 5 over Ossipee River Waterboro and Limerick, Maine, Soils Report No. 2016-03, Dated April 1, 2016 may be accessed at MaineDOT web address.

20. Geotechnical information furnished or referred to in this plan set is for the use of the Bidders and the Contractor. No assurance is given that the information or interpretations will be representative of actual subsurface conditions at the construction site. MaineDOT will not be responsible for the Bidders' or Contractor's interpretations of, or conclusions drawn from, the geotechnical information. The boring logs contained in the plan set present factual and interpretive subsurface information collected at discrete locations. Data provided may not be representative of the subsurface conditions between the boring locations.

21. Quantities included for pay items measured and paid for by Lump Sum are estimated quantities and are provided by MaineDOT for informational purposes only. Lump Sum pay items will be paid for at the Contract Bid amount, with no addition or reduction in payment to the Contractor if the actual final quantities are different from the MaineDOT provided estimated quantities, except as follows:

a. If a Lump Sum pay item is eliminated, the requirements of Standard Specifications Section 109.2, Elimination of Items, will take precedence.

b. If other Contract Documents specifically allow a change in payment for a Lump Sum pay item, those requirements will be followed.

c. If a design change results in changes to estimated quantities for Lump Sum pay items, price adjustments will be made in accordance with Standard Specifications Section 109.7, Equitable Adjustments to Compensation.

22. A Contract item is included for the installation of a cofferdam for pier construction only. All costs for any cofferdams necessary for abutment construction, including pumping, maintenance, related temporary soil erosion and water pollution controls and removal, will not be paid for directly, but will be considered incidental to related Contract items.

23. The Contractor shall submit a Bridge Demolition Plan to the Resident at least 10 business days prior to the start of demolition work. The plan shall outline the methods and equipment to be used to remove and dispose of all materials included in the existing bridge. No work related to the removal of the bridge shall be undertaken by the Contractor until MaineDOT has reviewed the Bridge Demolition Plan for appropriateness and completeness. Payment for all work necessary for developing, submitting and finalizing the Demolition Plan will be considered incidental to the bridge removal pay item.

24. Place heavy riprap on slopes steeper than 2H:1V, or as directed by the Resident.

25. Any damage to the slopes caused by the Contractor's equipment, personnel, or operation shall be repaired to the satisfaction of the resident. All work, equipment, and materials required to make repairs shall be at the Contractor's expense.

26. No separate payment for Superintendent or Foreman shall be made for the supervision of equipment being paid for under the equipment rental items.

27. All work shall be done in accordance with the Maine Department of Transportation's Best Management Practices for Erosion Control & Sediment Control, latest edition.

28. Grubbing in fill areas has been shown on the cross sections and the quantities noted. These limits are approximate and have been used for estimating purposes only. Actual grubbing limits may vary based on field conditions as directed by the Resident. Estimated grubbing depths are 6 inches in field areas and 12 inches in wooded areas.

29. The Contractor shall plan and conduct their work accordingly so that, upon final completion of the project, there is no drop-off from the edge of shoulder pavement.

30. Driveway fill side slopes shall be the same as the non-guardrail fill slopes unless otherwise noted on the plans.

31. Required ditch protection shown on the plans or in the Construction Notes is for estimating purposes only. The actual type and location of ditch protection may be altered by the Resident.

32. Existing inslopes steeper than 2:1 in proposed fill areas shall be benched as directed by the Resident.

33. Unpaved entrances shall be constructed with 14" aggregate subbase course gravel or 11" aggregate subbase course gravel and 3" untreated aggregate surface course unless otherwise noted in the plans or directed by the Resident. Item 411.10 may be used to back-up pavement lip, but will be paid for as item 304.10.

34. Grassed entrances shall be constructed with 12" aggregate subbase course gravel and 2" loam, seed & mulch unless otherwise noted in the plans or directed by the Resident.

35. The culvert sizes shown on the plans and cross sections are for smoothlined pipes.

36. Guardrail end treatments shall be installed concurrently with the placement of each section of beam guardrail.

37. All existing guardrail shall be removed and become the property of the Contractor. Removal and disposal shall be considered incidental to the guardrail items.

38. Two Reflectorized Flexible G.R. Markers (Item 606.353) will be installed at each guardrail end.

39. Payment for Regulatory Warning Signs, Type II (conforming to Item 645.202) shall be incidental to the Contract.

Filename: ...\BRIDGE\MSTA\003_Notes_01.dgn Division: BRIDGE Username: common Date:4/19/2016

STATE OF MAINE
DEPARTMENT OF TRANSPORTATION
STP-2047(600)
WIN 20476.00
BRIDGE NO. 2807
BRIDGE PLANS

Hoyle, Tanner & Associates, Inc.
www.hoyletanner.com

PROJ. MANAGER	M. P-ARLIN	BY	DATE
DESIGN-DETAILED	RSW	PBD	APR 2016
CHECKED-REVIEWED	JCR	AML	APR 2016
DESIGN2-DETAILED2	BKM	BKM	APR 2016
DESIGN3-DETAILED3			
REVISIONS 1			
REVISIONS 2			
REVISIONS 3			
REVISIONS 4			
FIELD CHANGES			

STIMSON BRIDGE
LITTLE OSSIPEE RIVER
WATERBORO-LIMERICK YORK COUNTY

GENERAL CONSTRUCTION NOTES

ITEM 606.1721 - BRIDGE TRANSITION TYPE 1
STATION TO STATION
150+01.25 - 150+20.00 LT
151+91.50 - 152+10.25 LT
149+87.75 - 150+06.50 RT
151+71.00 - 151+89.75 RT

ITEM 606.23 - GUARDRAIL TYPE 3C SINGLE RAIL
STATION TO STATION
148+63.75 - 150+01.25 LT - 11 RAILS
152+12.00 - 152+47.75 LT - 3 RAILS
148+50.25 - 149+87.75 RT - 11 RAILS

ITEM 606.231 - GUARDRAIL TYPE 3C SINGLE RAIL
15' RADIUS AND UNDER
STATION TO STATION
152+47.75 - 152+65.5 LT - 2 RAILS
152+12.5 - BEAVER BROOK ROAD RT - 1 RAIL

ITEM 606.232 - GUARDRAIL TYPE 3C SINGLE RAIL
OVER 15' RADIUS
STATION TO STATION
151+89.50 - 152+12.50 RT - 3 RAILS

ITEM 606.265 - GUARDRAIL TERMINAL END - SINGLE RAIL
STATION
152+65.5 LT
152+02.0 RT

ITEM 606.79 - GUARDRAIL 350 FLARED TERMINAL
STATION TO STATION
148+24.5 - 148+62.0 LT
148+11.0 - 148+50.0 RT

GUARDRAIL 350 FLARED TERMINAL WIDENING
STATION TO STATION
147+75.0 - 148+62.0 LT
147+75.0 - 148+50.0 RT

ITEM 610.08 - PLAIN RIPRAP
STATION
148+58.0 LT
149+71.0 LT

ITEM 609.31 - CURB TYPE 3, MOLD 3
STATION TO STATION
148+58.0 - 149+70.0 LT
149+72.0 - 150+15.0 LT

ITEM 610.16 - HEAVY RIPRAP
STATION TO STATION
149+63.0 - 150+37.0 LT
151+68.0 - 152+10.0 LT
149+61.0 - 150+37.0 RT.
151+30.0 - 151+62.0 RT

ITEM 610.18 - STONE DITCH PROTECTION
STATION TO STATION
152+10.0 - 152+54.5 LT
152+94.5 - 155+00.0 LT
151+62.0 - 152+00.0 RT
152+84.3 - 153+85.6 RT
154+29.8 - 155+00.0 RT

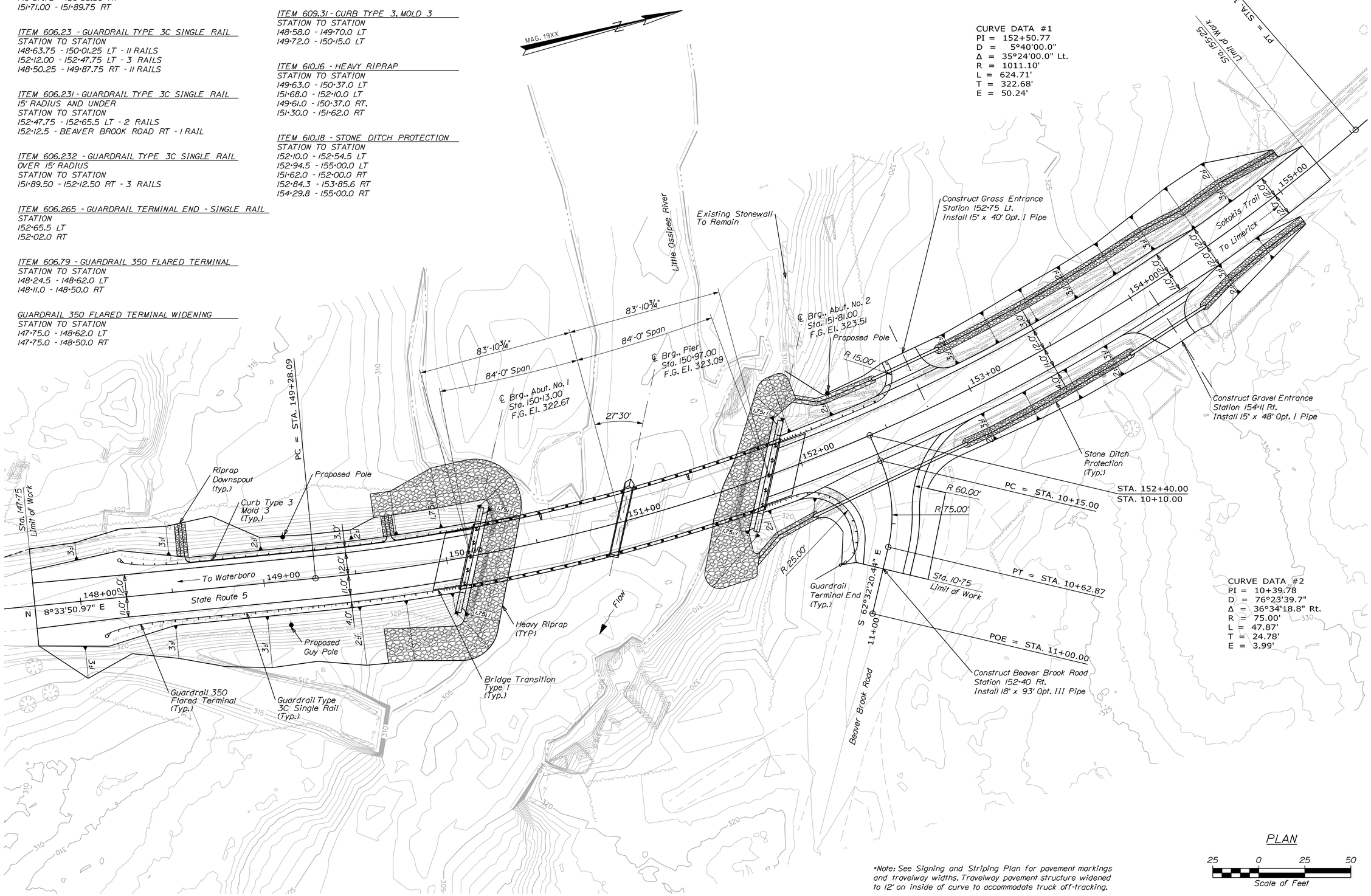

*Note: See Signing and Striping Plan for pavement markings and travelway widths. Travelway pavement structure widened to 12' on inside of curve to accommodate truck off-tracking.

STATE OF MAINE
DEPARTMENT OF TRANSPORTATION

STP-2047(600)

WIN 20476.00

BRIDGE NO. 2807

BRIDGE PLANS

Hoyle, Tanner & Associates, Inc.
www.hoyletanner.com

PROJ. MANAGER	M. PARLIN	BY	DATE
DESIGN-DETAILED	RSW	PBD	APR 2016
CHECKED-REVIEWED	JCR	AML	APR 2016
DESIGN2-DETAILED2	BKM	BKM	APR 2016
DESIGN3-DETAILED3			
REVISIONS 1			
REVISIONS 2			
REVISIONS 3			
REVISIONS 4			
FIELD CHANGES			

STIMSON BRIDGE
LITTLE OSSIPEE RIVER
WATERBORO-LIMERICK YORK COUNTY

GENERAL PLAN

SHEET NUMBER
4
OF 41

Filename: ...\MSTA\004_General Plans.dgn Division: BRIDGE Username: common Date:4/25/2016

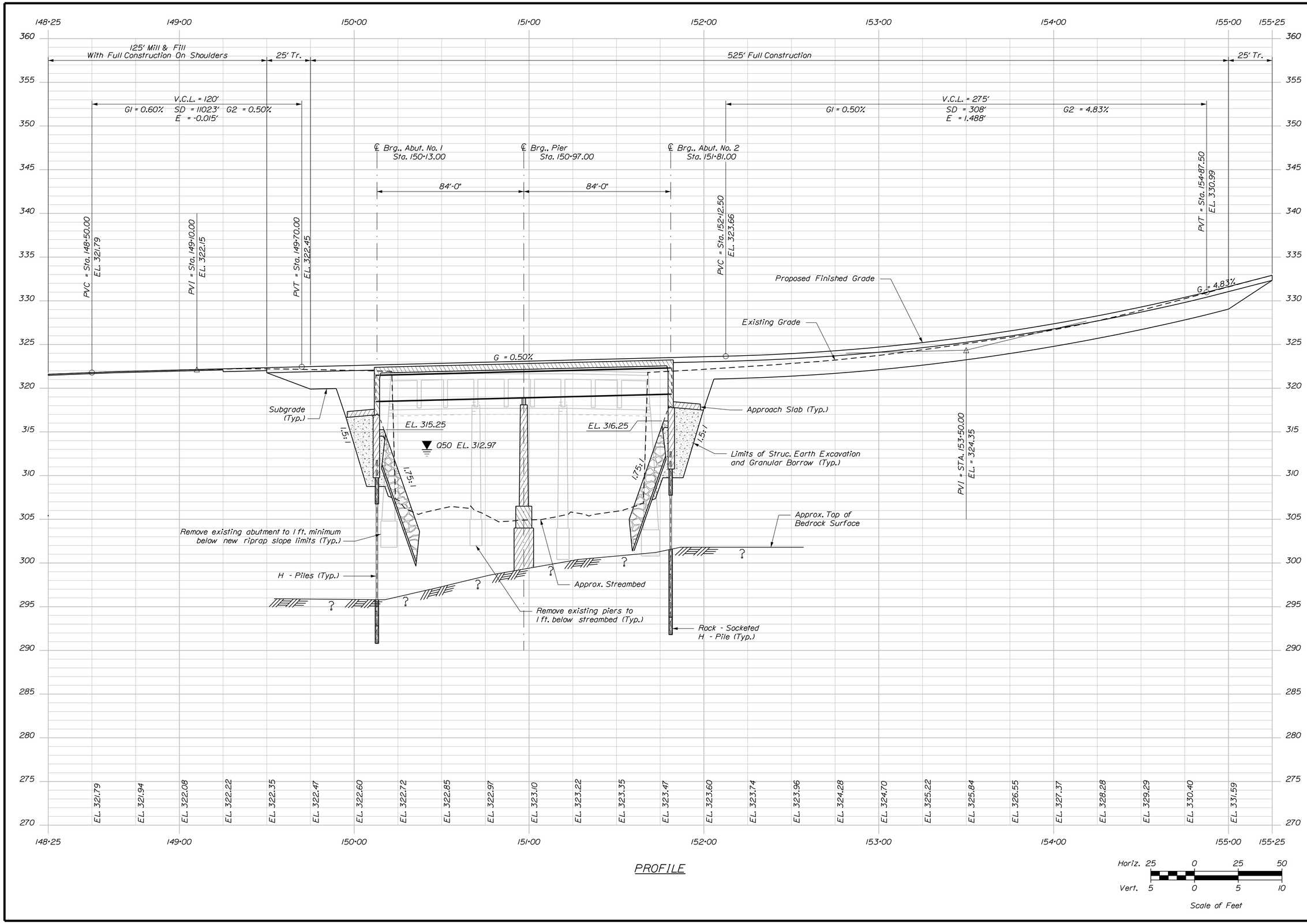

PROFILE

STATE OF MAINE
DEPARTMENT OF TRANSPORTATION

STP-2047(600)

WIN 20476.00

BRIDGE NO. 2807

BRIDGE PLANS

Hoyle, Tanner & Associates, Inc.
www.hoyletanner.com

PROJ. MANAGER	M. PARLIN	BY	DATE
DESIGN-DETAILED	RSW	PBD	APR 2016
CHECKED-REVIEWED	JCR	AML	APR 2016
DESIGN2-DETAILED2	BKM	BKM	APR 2016
DESIGN3-DETAILED3			
REVISIONS 1			
REVISIONS 2			
REVISIONS 3			
REVISIONS 4			
FIELD CHANGES			

STIMSON BRIDGE
LITTLE OSSIPEE RIVER
WATERBORO-LIMERICK YORK COUNTY

PROFILE

SHEET NUMBER

5

OF 41

Filename: ...\HIGHWAY\MSTA\005_Profile.dgn Division: BRIDGE Username: common Date:4/19/2016

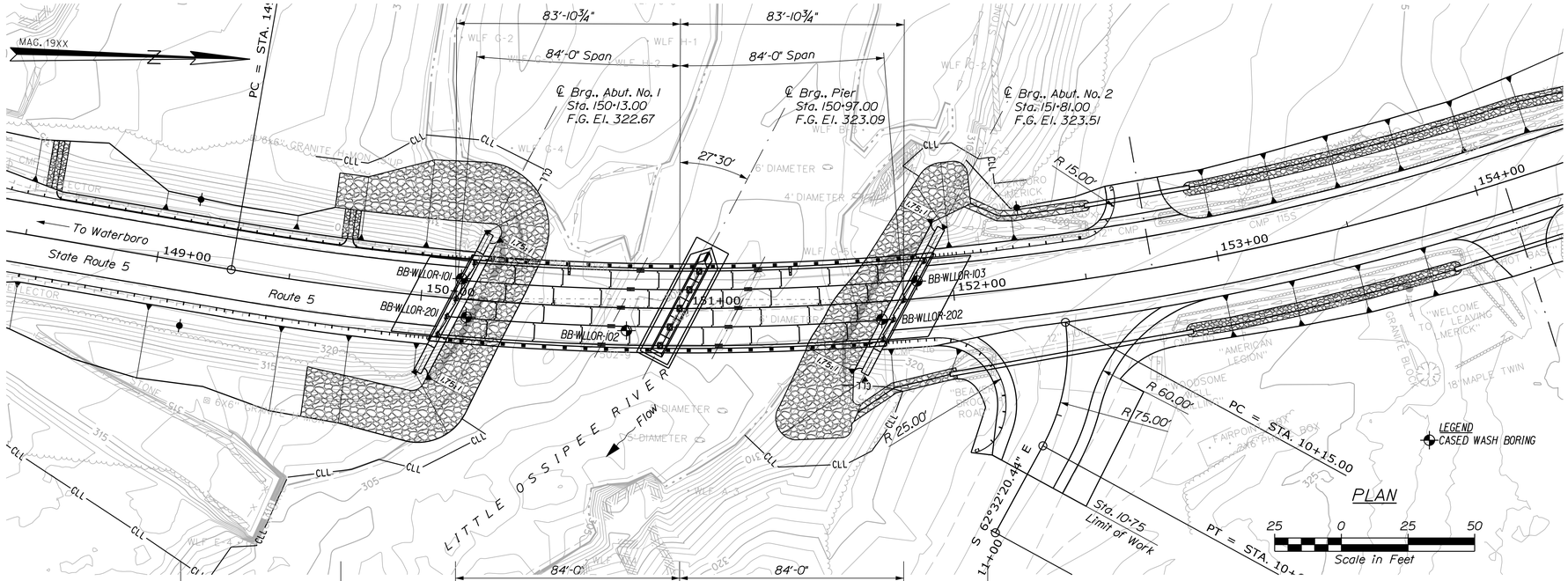

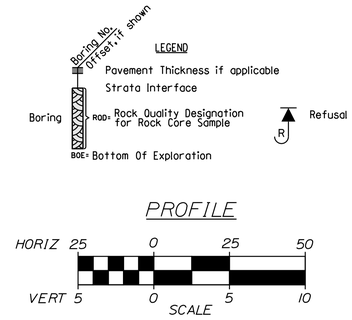

Note: This generalized interpretive soil profile is intended to convey trends in subsurface conditions. The boundaries between strata are approximate and idealized, and have been developed by interpretations of widely spaced explorations and samples. Actual soil transitions may vary and are probably more erratic. For more specific information refer to the exploration logs.

STATE OF MAINE
DEPARTMENT OF TRANSPORTATION

STP-2047(600)

WIN 20476.00

BRIDGE NO. 2807

BRIDGE PLANS

		BY	DATE
PROJ. MANAGER	M. Parlin		
DESIGN-DETAILED			
CHECKED-REVIEWED			
DESIGN2-DETAILED2	N.SHERWOOD	T.WHITE	APR. 2016
DESIGN3-DETAILED3			
REVISIONS 1			
REVISIONS 2			
REVISIONS 3			
REVISIONS 4			
FIELD CHANGES			

SIGNATURE

P.E. NUMBER

DATE

STIMSON BRIDGE
LITTLE OSSIPEE RIVER
WATERBORO-LIMERICK YORK COUNTY

BORING LOCATION PLAN & INTERPRETIVE SUBSURFACE PROFILE

SHEET NUMBER

6

OF 41

Filename: ...\BRIDGE\MSTA\006_BLP&ISP1.dgn Division: BRIDGE Username: common Date:4/19/2016

Filename: ...\MSTA\007_BORING LOGS1.dgn Division: GEOTECH Username: Nathan.A.Sherwood Date:4/1/2016

Maine Department of Transportation — Soil/Rock Exploration Log — US CUSTOMARY UNITS

Project: Stimson Bridge #2807 carries Route 5 over Little Ossipee River
Location: Waterboro-Limerick, Maine

Boring No.: BB-WLLOR-101
WIN: 20476.00

Driller:	MaineDOT	Elevation (ft.)	321.5	Auger ID/OD:	5-inch-diameter Solid Stem
Operator:	Giles/Daggett/Giles	Datum:	NAVD88	Sampler:	Standard Split Spoon
Logged By:	B. Wilder	Rig Type:	CME 45C	Hammer Wt./Fall:	140 pounds/30 inches
Date Start/Finish:	4/14/2015; 08:00-15:00	Drilling Method:	Cased Wash Boring	Core Barrel:	NQ - 2 inch
Boring Location:	Sta 150+14.6, 7.6 feet left	Casing ID/OD:	NW (3 inches/3.5 inches)	Water Level*:	Not Encountered
Hammer Efficiency Factor: 0.908		Hammer Type:	Automatic ☒ Hydraulic ☐ Rope & Cathead ☐		

Definitions:
D = Split Spoon Sample
MD = Unsuccessful Split Spoon Sample attempt
U = Thin Wall Tube Sample
MU = Unsuccessful Thin Wall Tube Sample attempt
V = Insitu Vane Shear Test, PP = Pocket Penetrometer
MV = Unsuccessful Insitu Vane Shear Test attempt
R = Rock Core Sample
SSA = Solid Stem Auger
HSA = Hollow Stem Auger
RC = Roller Cone
WOH = weight of 140lb. hammer
WOR/C = weight of rods or casing
WO1P = Weight of one person
S_u = Insitu Field Vane Shear Strength (psf)
T_v = Pocket Torvane Shear Strength (psf)
q_p = Unconfined Compressive Strength (ksf)
N-uncorrected = Raw field SPT N-value
Hammer Efficiency Factor = Annual Calibration Value
N_{60} = SPT N-uncorrected corrected for hammer efficiency
N_{60} = (Hammer Efficiency Factor/60%)*N-uncorrected
$S_{u(lab)}$ = Lab Vane Shear Strength (psf)
WC = water content, percent
LL = Liquid Limit
PL = Plastic Limit
PI = Plasticity Index
G = Grain Size Analysis
C = Consolidation Test

Sample Information

Depth (ft.)	Sample No.	Pen./Rec. (in.)	Sample Depth (ft.)	Blows (/6 in.) Shear Strength (psf) or RQD (%)	N-uncorrected	N_{60}	Casing Blows	Elevation (ft.)	Visual Description and Remarks	Laboratory Testing Results/ AASHTO and Unified Class
0							SSA	321.13	4.5-inch-thick layer of pavement (0.38)	
	10	24/18	2.00 - 4.00	4/10/6/10	16	24			Brown, moist, medium dense, well-graded SAND, some gravel, trace silt, occasional cobbles, (Fill).	GM263919 A-1-b, SM-SM WC=3.7%
5	20	24/17	5.00 - 7.00	4/5/9/8	18	27			Similar to above, except wet.	
10	30	24/6	10.00 - 12.00	5/5/5/5	10	15	19	312.50	(9.00) Grey-brown, wet, medium dense, SAND, some gravel, little silt, (River Alluvium and/or Glaciolacustrine Delta deposits).	
							33			
							37			
							37			
							34			
15	40	24/2	15.00 - 17.00	12/7/6/6	13	20	10		Wood fragments from 14.0-14.4 feet bgs.	
							16		Similar to above.	
							25			
							66			
							108			
20	50	24/12	20.00 - 22.00	16/16/15/36	31	47	5		Grey, wet, dense, SAND, some gravel, little silt.	GM263920 A-1-b, SM WC=12.6%
							5			
							35			
							146			
							189			
25	60 R1	8.4/8.4 60/59	25.00 - 25.70 29.70-30.70	26/50(2.4") RQD = 22%	---		050 NQ-2	295.80	RC to 25.0 feet bgs. (25.70) Top of Bedrock at Elevation 295.8 feet. R1: Bedrock: Red-brown to grey with white banding (composed of primarily quartz and feldspar that are not foliated), garnet SCHIST with foliated quartz, muscovite mica, feldspar, and amphibole, medium-grained, moderately hard, moderately weathered. Lower Member of the Rindgemere Formation Rock Mass Quality = Very Poor 98% Recovery R1: Core Times (min:sec) 25.7-26.7 feet (2:00) 26.7-27.7 feet (2:00) 27.7-28.7 feet (3:18) 28.7-29.7 feet (3:36) 29.7-30.7 feet (3:10)	GM263921 A-2-4 to A-2-7, SM WC=13.5%
30	R2	60/60	30.70 - 35.70	RQD = 48%					R2: Bedrock: The top 15 inches is similar to R1 but with increased iron staining. The bottom of R2 consists of massive PEGMATITE/WIDMATTE with the foliation becoming less pronounced. No iron staining in the bottom of the core. Rock Mass Quality = Poor 100% Recovery R2: Core Times (min:sec) 30.7-31.7 feet (2:40) 31.7-32.7 feet (2:14) 32.7-33.7 feet (2:11) 33.7-34.7 feet (2:40) 34.7-35.7 feet (2:30)	
35								285.80	(35.70) Bottom of Exploration at 35.70 feet below ground surface.	
40										
45										
50										

Remarks:
- 400 pounds of down pressure on Core Barrel
- bgs = below ground surface

Stratification lines represent approximate boundaries between soil types; transitions may be gradual.
* Water level readings have been made at times and under conditions stated. Groundwater fluctuations may occur due to conditions other than those present at the time measurements were made.

Page 1 of 1
Boring No.: BB-WLLOR-101

Maine Department of Transportation — Soil/Rock Exploration Log — US CUSTOMARY UNITS

Project: Stimson Bridge #2807 carries Route 5 over Little Ossipee River
Location: Waterboro-Limerick, Maine

Boring No.: BB-WLLOR-102
WIN: 20476.00

Driller:	MaineDOT	Elevation (ft.)	302.5	Auger ID/OD:	5-inch-diameter Solid Stem
Operator:	Giles/Daggett/Giles	Datum:	NAVD88	Sampler:	Standard Split Spoon
Logged By:	B. Wilder	Rig Type:	CME 45C	Hammer Wt./Fall:	140 pounds/30 inches
Date Start/Finish:	4/15/2015; 12:30-15:30	Drilling Method:	Cased Wash Boring	Core Barrel:	NQ - 2 inch
Boring Location:	Sta 150+77.2, 8.5 feet right	Casing ID/OD:	NW (3 inches/3.5 inches)	Water Level*:	Boring located in River
Hammer Efficiency Factor: 0.908		Hammer Type:	Automatic ☒ Hydraulic ☐ Rope & Cathead ☐		

Definitions:
D = Split Spoon Sample
MD = Unsuccessful Split Spoon Sample attempt
U = Thin Wall Tube Sample
MU = Unsuccessful Thin Wall Tube Sample attempt
V = Insitu Vane Shear Test, PP = Pocket Penetrometer
MV = Unsuccessful Insitu Vane Shear Test attempt
R = Rock Core Sample
SSA = Solid Stem Auger
HSA = Hollow Stem Auger
RC = Roller Cone
WOH = weight of 140lb. hammer
WOR/C = weight of rods or casing
WO1P = Weight of one person
S_u = Insitu Field Vane Shear Strength (psf)
T_v = Pocket Torvane Shear Strength (psf)
q_p = Unconfined Compressive Strength (ksf)
N-uncorrected = Raw field SPT N-value
Hammer Efficiency Factor = Annual Calibration Value
N_{60} = SPT N-uncorrected corrected for hammer efficiency
N_{60} = (Hammer Efficiency Factor/60%)*N-uncorrected
$S_{u(lab)}$ = Lab Vane Shear Strength (psf)
WC = water content, percent
LL = Liquid Limit
PL = Plastic Limit
PI = Plasticity Index
G = Grain Size Analysis
C = Consolidation Test

Sample Information

Depth (ft.)	Sample No.	Pen./Rec. (in.)	Sample Depth (ft.)	Blows (/6 in.) Shear Strength (psf) or RQD (%)	N-uncorrected	N_{60}	Casing Blows	Elevation (ft.)	Visual Description and Remarks	Laboratory Testing Results/ AASHTO and Unified Class
0	10	24/17	0.00 - 2.00	26/30/23/18	53	80	36		Brown, wet, very dense, well-graded GRAVEL, some sand, trace silt, occasional cobbles, (River Alluvium).	GM263922 A-1-a, GW-GM WC=9.2%
							15			
							62			
	R1	48/48	3.90 - 7.90	RQD = 10%			Q115 NQ-2	298.60	Q115 blows for 10.8 inches (3.90) Top of Bedrock at Elevation 298.6 feet. R1: Bedrock: White to grey, massive PEGMATITE/WIDMATTE with a high muscovite content in the upper 18 inches of the core, mostly feldspar and quartz with numerous black beryl crystals scattered throughout the rest of the core, moderately hard, moderately weathered, joints are typically horizontal with several steeply dipping joints (45-60 degrees), iron staining with lime green minerals on the lower joints. Lower Member of the Rindgemere Formation. Rock Mass Quality = Very Poor 100% Recovery R1: Core Times (min:sec) 3.9-4.9 feet (2:36) 4.9-5.9 feet (5:57) 5.9-6.9 feet (2:49) 6.9-7.9 feet (4:00) R2: Bedrock: Similar to R1; however, the quartz is forming a distinctive graphic pattern and the joints creating smooth breaks in the core dipping at 0-20, 45, and 60 degrees. Most of the joints have iron staining. Rock Mass Quality = Poor 100% Recovery R2: Core Times (min:sec) 7.9-8.9 feet (3:51) 8.9-9.9 feet (5:30) 9.9-10.9 feet (5:30) 10.9-11.9 feet (9:38) 11.9-12.3 feet (5:00)	
5										
	R2	52.8/ 52.8	7.90 - 12.30	RQD = 46%				290.20	(12.30) Bottom of Exploration at 12.30 feet below ground surface.	
10										
15										
20										
25										

Remarks:
- 400 pounds of down pressure on core barrel
- 18.5 feet from bridge deck to bottom of riverbed
- 11-inch-thick concrete deck
- bgs = below ground surface

Stratification lines represent approximate boundaries between soil types; transitions may be gradual.
* Water level readings have been made at times and under conditions stated. Groundwater fluctuations may occur due to conditions other than those present at the time measurements were made.

Page 1 of 1
Boring No.: BB-WLLOR-102

Maine Department of Transportation — Soil/Rock Exploration Log — US CUSTOMARY UNITS

Project: Stimson Bridge #2807 carries Route 5 over Little Ossipee River
Location: Waterboro-Limerick, Maine

Boring No.: BB-WLLOR-103
WIN: 20476.00

Driller:	MaineDOT	Elevation (ft.)	321.0	Auger ID/OD:	5-inch-diameter Solid Stem
Operator:	Giles/Daggett/Giles	Datum:	NAVD88	Sampler:	Standard Split Spoon
Logged By:	B. Wilder	Rig Type:	CME 45C	Hammer Wt./Fall:	140 pounds/30 inches
Date Start/Finish:	4/15/2015; 08:00-12:00	Drilling Method:	Cased Wash Boring	Core Barrel:	NQ - 2 inch
Boring Location:	Sta 151+86.6, 6.6 feet left	Casing ID/OD:	NW (3 inches/3.5 inches)	Water Level*:	Not Encountered
Hammer Efficiency Factor: 0.908		Hammer Type:	Automatic ☒ Hydraulic ☐ Rope & Cathead ☐		

Definitions:
D = Split Spoon Sample
MD = Unsuccessful Split Spoon Sample attempt
U = Thin Wall Tube Sample
MU = Unsuccessful Thin Wall Tube Sample attempt
V = Insitu Vane Shear Test, PP = Pocket Penetrometer
MV = Unsuccessful Insitu Vane Shear Test attempt
R = Rock Core Sample
SSA = Solid Stem Auger
HSA = Hollow Stem Auger
RC = Roller Cone
WOH = weight of 140lb. hammer
WOR/C = weight of rods or casing
WO1P = Weight of one person
S_u = Insitu Field Vane Shear Strength (psf)
T_v = Pocket Torvane Shear Strength (psf)
q_p = Unconfined Compressive Strength (ksf)
N-uncorrected = Raw field SPT N-value
Hammer Efficiency Factor = Annual Calibration Value
N_{60} = SPT N-uncorrected corrected for hammer efficiency
N_{60} = (Hammer Efficiency Factor/60%)*N-uncorrected
$S_{u(lab)}$ = Lab Vane Shear Strength (psf)
WC = water content, percent
LL = Liquid Limit
PL = Plastic Limit
PI = Plasticity Index
G = Grain Size Analysis
C = Consolidation Test

Sample Information

Depth (ft.)	Sample No.	Pen./Rec. (in.)	Sample Depth (ft.)	Blows (/6 in.) Shear Strength (psf) or RQD (%)	N-uncorrected	N_{60}	Casing Blows	Elevation (ft.)	Visual Description and Remarks	Laboratory Testing Results/ AASHTO and Unified Class
0							SSA	320.67	4-inch-thick layer of pavement (0.33)	
	10	24/17	1.00 - 3.00	8/8/7/7	15	23			Brown, moist, medium dense, poorly-graded SAND, trace gravel, trace silt, (Fill).	GM263923 A-1-b, SP-SM WC=3.3%
5	20	24/14	5.00 - 7.00	8/4/4/5	8	12	23		Similar to above.	
							19			
							17			
							13			
							14			
10	30	24/13	10.00 - 12.00	2/2/8/13	10	15	3	310.50	(10.50) Brown, wet, medium dense, SAND, some gravel, little silt, (River Alluvium and/or Glaciolacustrine Delta deposits).	GM263924 A-1-b, SM WC=22.8%
							29			
							39			
							34			
							69			
15	40	24/18	15.00 - 17.00	37/13/13/18	26	39	40		Brown, wet, dense, SAND, some gravel, little silt. RC to 19.0 feet bgs.	GM263925 A-1-b, SM WC=8.5%
							189			
							56			
							127			
20	50 R1	2.4/2.4 60/60	19.00 - 19.20 19.20-24.20	50(2.4") RQD = 52%	---		NQ-2	301.80	Similar to above, except very dense Weathered bedrock observed in tip of sampler (19.20) Top of Bedrock at Elevation 301.8 feet. R1: Bedrock: Red-brown to grey with white banding (composed of primarily quartz and feldspar which are not foliated), garnet SCHIST with foliated quartz, muscovite mica, feldspar, amphibole, medium-grained, moderately hard, moderately weathered, the foliation created by the mica plates, dips from 0-10 degrees and is locally contorted by folds. Lower Member of the Rindgemere Formation Rock Mass Quality = Fair 100% Recovery R1: Core Times (min:sec) 19.2-20.2 feet (2:32) 20.2-21.2 feet (2:34) 21.2-22.2 feet (2:46) 22.2-23.2 feet (3:20) 23.2-24.2 feet (3:35) R2: Bedrock: Similar to R1; however, R2 has increased iron staining along the joints. Rock Mass Quality = Poor 92% Recovery R2: Core Times (min:sec) 24.2-25.2 feet (2:10) 25.2-26.2 feet (2:11) 26.2-27.2 feet (2:46) 27.2-28.2 feet (3:00) 28.2-29.2 feet (3:00)	
25	R2	60/55	24.20 - 29.20	RQD = 40%				291.80	(29.20) Bottom of Exploration at 29.20 feet below ground surface.	
30										
35										
40										
45										
50										

Remarks:
- 400 pounds of down pressure on core barrel
- bgs = below ground surface

Stratification lines represent approximate boundaries between soil types; transitions may be gradual.
* Water level readings have been made at times and under conditions stated. Groundwater fluctuations may occur due to conditions other than those present at the time measurements were made.

Page 1 of 1
Boring No.: BB-WLLOR-103

STATE OF MAINE
DEPARTMENT OF TRANSPORTATION

STP-2047(600)

WIN 20476.00

BRIDGE NO. 2807

BRIDGE PLANS

		BY	DATE
PROJ. MANAGER	M. Parin		
DESIGN-DETAILED			
CHECKED-REVIEWED			
DESIGN2-DETAILED2	N.SHERWOOD	T.WHITE	APR.2016
DESIGN3-DETAILED3			
REVISIONS 1			
REVISIONS 2			
REVISIONS 3			
REVISIONS 4			
FIELD CHANGES			

SIGNATURE
P.E. NUMBER
DATE

STIMSON BRIDGE
LITTLE OSSIPEE RIVER
WATERBORO \ LIMERICK YORK COUNTY

BORING LOGS

SHEET NUMBER
7
OF 41

Filename: ...\MSTA\008_BORING LOGS2.dgn Division: GEOTECH Username: Nathan.A.Sherwood Date:4/1/2016

Maine Department of Transportation

Soil/Rock Exploration Log
US CUSTOMARY UNITS

Project: Stimson Bridge #2807 carries Route 5 over Little Ossipee River
Location: Waterboro-Limerick, Maine

Boring No.: BB-WLLOR-201
WIN: 20476.00

Driller:	MaineDOT	Elevation (ft.)	322.0	Auger ID/OD:	5-inch-diameter Solid Stem
Operator:	Wilder/Doggett	Datum:	NAVD88	Sampler:	Standard Split Spoon
Logged By:	B. Wilder	Rig Type:	CME 45C	Hammer Wt./Fall:	140 pounds/30 inches
Date Start/Finish:	3/23/2016; 12:00-14:30	Drilling Method:	Cased Wash Boring	Core Barrel:	NQ2 (2-inch-diameter)
Boring Location:	Sta 150+17.5, 6.6 feet right	Casing ID/OD:	NW (3 inches/3.5 inches)	Water Level*:	Not Encountered
Hammer Efficiency Factor: 0.908		Hammer Type:	Automatic ☒ Hydraulic ☐ Rope & Cathead ☐		

Definitions:
D = Split Spoon Sample
MD = Unsuccessful Split Spoon Sample attempt
U = Thin Wall Tube Sample
MU = Unsuccessful Thin Wall Tube Sample attempt
V = Insitu Vane Shear Test; PP = Pocket Penetrometer
MV = Unsuccessful Insitu Vane Shear Test attempt
R = Rock Core Sample
SSA = Solid Stem Auger
HSA = Hollow Stem Auger
RC = Roller Cone
WOH = weight of 140lb. hammer
WOR/C = weight of rods or casing
WOP = Weight of one person
S_u = Insitu Field Vane Shear Strength (psf)
T_v = Pocket Torvane Shear Strength (psf)
q_p = Unconfined Compressive Strength (ksf)
N-uncorrected = Raw field SPT N-value
Hammer Efficiency Factor = Annual Calibration Value
N_{60} = SPT N-uncorrected corrected for hammer efficiency
N_{60} = Hammer Efficiency Factor/60%*N-uncorrected
$S_{u(lab)}$ = Lab Vane Shear Strength (psf)
WC = water content, percent
LL = Liquid Limit
PL = Plastic Limit
PI = Plasticity Index
G = Grain Size Analysis
C = Consolidation Test

Depth (ft.)	Sample No.	Pen./Rec. (in)	Sample Depth (ft.)	Blows (/6 in.) Shear Strength (psf) or RQD (%)	N-uncorrected	N_{60}	Casing Blows	Elevation (ft.)	Graphic Log	Visual Description and Remarks	Laboratory Testing Results/ AASHTO and Unified Class
0							SSA			Drove casing and washed with roller cone from 0 to 26.2 feet bgs. Soil samples were not retrieved; therefore, no soil descriptions are given at this boring location.	
5											
10											
15							21				
							27				
							33				
							46				
20							39				
							42				
							36				
							57				
							58				
25							85				
							101				
	R1	60/58	26.20 - 31.20	RQD = 72%			050 NQ2	295.80		050 blows for 2.4 inches. — 26.20 Top of Bedrock at Elevation 295.8 feet R1: Bedrock: Grey to white with grey mottling. PEGMATITE with black banded quartz, feldspar, biotite, amphibole, and beryl with trace garnet gneiss, hard, moderately weathered, approximately horizontal fractures. Lower Member of the Rindgemere Formation. Rock Mass Quality = Fair 91% Recovery R1: Core Times (min:sec) 26.2-27.2 feet (2:15) 27.2-28.2 feet (2:20) 28.2-29.2 feet (2:00) 29.2-30.2 feet (3:15) 30.2-31.2 feet (2:45)	
30	R2	60/59	31.20 - 36.20	RQD = 47%						R2: Bedrock: Similar to R1 except lowly dipping fractures (up to 15 degrees). Rock Mass Quality = Poor 98% Recovery. R2: Core Times (min:sec) 31.2-32.2 feet (2:00) 32.2-33.2 feet (2:05) 33.2-34.2 feet (2:00) 34.2-35.2 feet (2:36) 35.2-36.2 feet (2:08)	
35								285.80		— 36.20 Bottom of Exploration at 36.20 feet below ground surface.	
40											
45											
50											

Remarks:
- 400 pounds of down pressure on core barrel
- bgs = below ground surface
- No soil sampling was performed at this boring location.

Stratification lines represent approximate boundaries between soil types; transitions may be gradual.

* Water level readings have been made at times and under conditions stated. Groundwater fluctuations may occur due to conditions other than those present at the time measurements were made.

Page 1 of 1

Boring No.: BB-WLLOR-201

Maine Department of Transportation

Soil/Rock Exploration Log
US CUSTOMARY UNITS

Project: Stimson Bridge #2807 carries Route 5 over Little Ossipee River
Location: Waterboro-Limerick, Maine

Boring No.: BB-WLLOR-202
WIN: 20476.00

Driller:	MaineDOT	Elevation (ft.)	322.0	Auger ID/OD:	5-inch-diameter Solid Stem
Operator:	Wilder/Doggett	Datum:	NAVD88	Sampler:	Standard Split Spoon
Logged By:	B. Wilder	Rig Type:	CME 45C	Hammer Wt./Fall:	140 pounds/30 inches
Date Start/Finish:	3/23/2016; 14:30-17:00	Drilling Method:	Cased Wash Boring	Core Barrel:	NQ2 (2-inch-diameter)
Boring Location:	Sta 151+72.4, 6.6 feet right	Casing ID/OD:	NW (3 inches/3.5 inches)	Water Level*:	Not Encountered
Hammer Efficiency Factor: 0.908		Hammer Type:	Automatic ☒ Hydraulic ☐ Rope & Cathead ☐		

Definitions:
D = Split Spoon Sample
MD = Unsuccessful Split Spoon Sample attempt
U = Thin Wall Tube Sample
MU = Unsuccessful Thin Wall Tube Sample attempt
V = Insitu Vane Shear Test; PP = Pocket Penetrometer
MV = Unsuccessful Insitu Vane Shear Test attempt
R = Rock Core Sample
SSA = Solid Stem Auger
HSA = Hollow Stem Auger
RC = Roller Cone
WOH = weight of 140lb. hammer
WOR/C = weight of rods or casing
WOP = Weight of one person
S_u = Insitu Field Vane Shear Strength (psf)
T_v = Pocket Torvane Shear Strength (psf)
q_p = Unconfined Compressive Strength (ksf)
N-uncorrected = Raw field SPT N-value
Hammer Efficiency Factor = Annual Calibration Value
N_{60} = SPT N-uncorrected corrected for hammer efficiency
N_{60} = Hammer Efficiency Factor/60%*N-uncorrected
$S_{u(lab)}$ = Lab Vane Shear Strength (psf)
WC = water content, percent
LL = Liquid Limit
PL = Plastic Limit
PI = Plasticity Index
G = Grain Size Analysis
C = Consolidation Test

Depth (ft.)	Sample No.	Pen./Rec. (in)	Sample Depth (ft.)	Blows (/6 in.) Shear Strength (psf) or RQD (%)	N-uncorrected	N_{60}	Casing Blows	Elevation (ft.)	Graphic Log	Visual Description and Remarks	Laboratory Testing Results/ AASHTO and Unified Class
0							SSA			Drove casing and washed with roller cone from 0 to 20.8 feet bgs. Soil samples were not retrieved; therefore, no soil descriptions are given at this boring location.	
5											
10											
15											
							44				
							68				
20	R1	60/50	20.80 - 25.80	RQD = 32%			0120 NQ2	301.20		0120 blows for 5.6 inches. — 20.80 Top of Bedrock at Elevation 301.2 feet R1: Bedrock: Grey to white with grey mottling. PEGMATITE with black banded quartz, feldspar, biotite, amphibole, and beryl with trace garnet gneiss, hard, moderately weathered, approximately horizontal fractures with several transverse fractures with oxidation staining. Lower Member of the Rindgemere Formation. Rock Mass Quality = Poor 83% Recovery. R1: Core Times (min:sec) 20.8-21.8 feet (2:15) 21.8-22.8 feet (1:45) 22.8-23.8 feet (1:40) 23.8-24.8 feet (1:45) 24.8-25.8 feet (2:20)	
25	R2	60/31	25.80 - 30.80	RQD = 13%						R2: Bedrock: Similar to R1 except more fragmented with one joint that is 80 degrees. Rock Mass Quality = Very Poor 52% Recovery. R2: Core Times (min:sec) 25.8-26.8 feet (1:40) 26.8-27.8 feet (1:45) 27.8-28.8 feet (1:30) 28.8-29.8 feet (2:00) 29.8-30.8 feet (2:15)	
30								291.20		— 30.80 Bottom of Exploration at 30.80 feet below ground surface.	
35											
40											
45											
50											

Remarks:
- 400 pounds of down pressure on core barrel
- bgs = below ground surface
- No soil sampling was performed at this boring location.

Stratification lines represent approximate boundaries between soil types; transitions may be gradual.

* Water level readings have been made at times and under conditions stated. Groundwater fluctuations may occur due to conditions other than those present at the time measurements were made.

Page 1 of 1

Boring No.: BB-WLLOR-202

STATE OF MAINE
DEPARTMENT OF TRANSPORTATION

STP-2047(600)

WIN 20476.00

BRIDGE NO. 2807

BRIDGE PLANS

PROJ. MANAGER	M. Parin	BY	DATE
DESIGN-DETAILED			
CHECKED-REVIEWED			
DESIGN2-DETAILED2	N.SHERWOOD	T.WHITE	APR. 2016
DESIGN3-DETAILED3			
REVISIONS 1			
REVISIONS 2			
REVISIONS 3			
REVISIONS 4			
FIELD CHANGES			

SIGNATURE

P.E. NUMBER

DATE

STIMSON BRIDGE
LITTLE OSSIPEE RIVER
WATERBORO \ LIMERICK YORK COUNTY

BORING LOGS

SHEET NUMBER
8
OF 41

LEGEND	
4" SWLL	4" SOLID WHITE LANE LINE
4" DYCL	4" DOUBLE YELLOW CENTER LINE
SL	STOP LINE (18")

NOTES

1. PAYMENT FOR REMOVAL OF EXISTING SIGNS SHALL BE INCIDENTAL TO THE CONTRACT.

2. THE CONTRACTOR SHALL REMOVE ALL EXISTING PAVEMENT MARKINGS THAT CONFLICT WITH PROPOSED MARKINGS.

3. PROPOSED SIGN LOCATIONS, OFFSET AND HEIGHT SHALL BE IN ACCORDANCE WITH THE MANUAL FOR UNIFORM TRAFFIC CONTROL DEVICES FOR STREETS AND HIGHWAYS (MUTCD), LATEST EDITION.

4. PAYMENT FOR ALL NEW SIGNS, SIGNS REMOVED AND REPLACED, AND SIGNS REMOVED AND RELOCATED SHALL BE INCIDENTAL TO THE CONTRACT. ALL SIGNS REPLACED OR RELOCATED SHALL BE PLACED ON NEW POSTS.

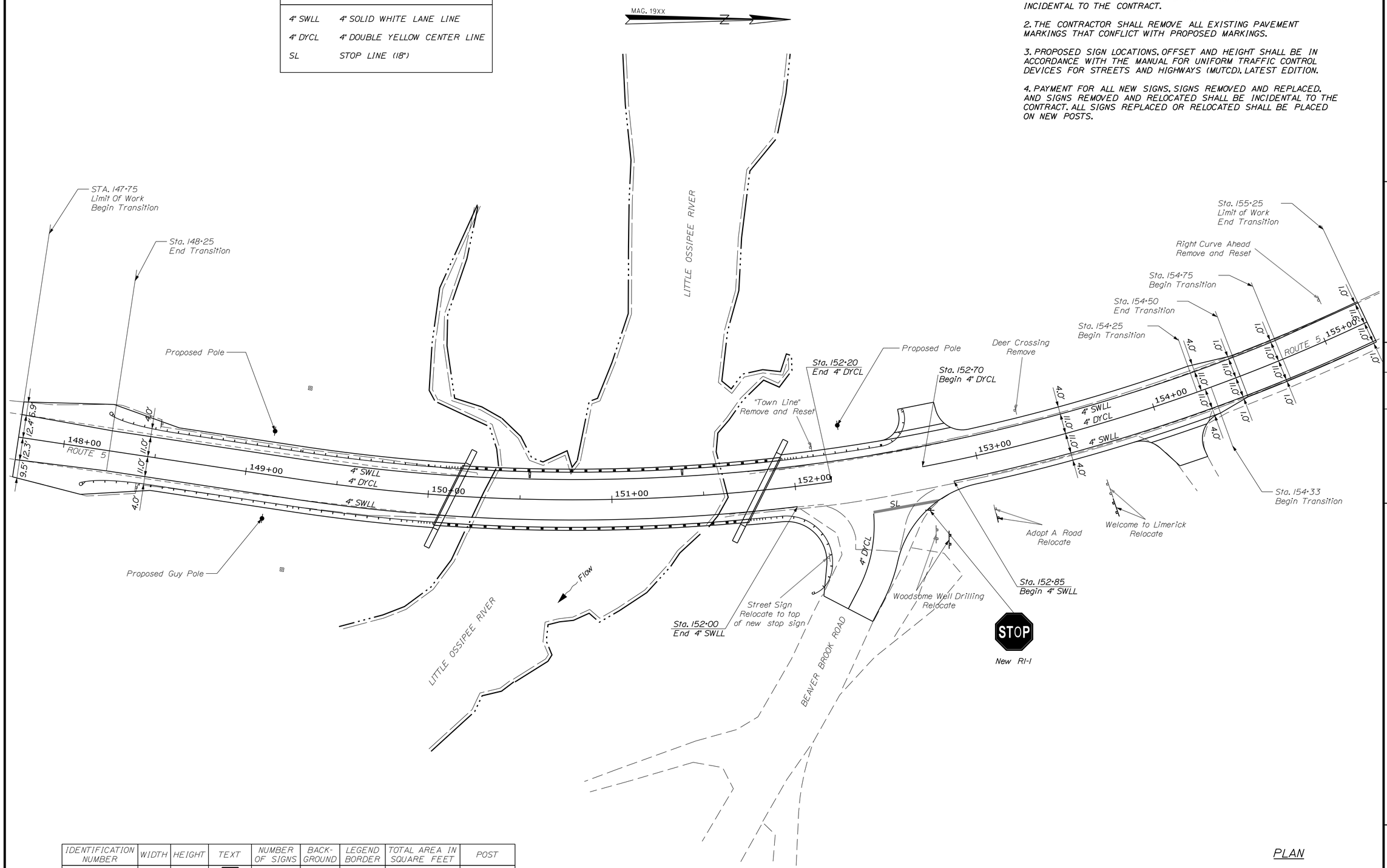

IDENTIFICATION NUMBER	WIDTH	HEIGHT	TEXT	NUMBER OF SIGNS	BACK-GROUND	LEGEND BORDER	TOTAL AREA IN SQUARE FEET	POST
RI-1	30"	30"	STOP	1	RED	WHITE	5.18	U-CHANNEL

STATE OF MAINE
DEPARTMENT OF TRANSPORTATION

STP-2047(600)

WIN 20476.00

BRIDGE NO. 2807

BRIDGE PLANS

Hoyle, Tanner & Associates, Inc.
www.hoyletanner.com

PROJ. MANAGER	M. PARLIN	BY	DATE
DESIGN-DETAILED	RSW	PBD	APR 2016
CHECKED-REVIEWED	JCR	AML	APR 2016
DESIGN2-DETAILED2	BKM	BKM	APR 2016
DESIGN3-DETAILED3			
REVISIONS 1			
REVISIONS 2			
REVISIONS 3			
REVISIONS 4			
FIELD CHANGES			

STIMSON BRIDGE
LITTLE OSSIPEE RIVER
WATERBORO-LIMERICK YORK COUNTY

SIGNING AND STRIPING PLAN

SHEET NUMBER

9

OF 41

Filename: ...\009_Signing and Striping Plan.dgn Division: BRIDGE Username: common Date:4/19/2016

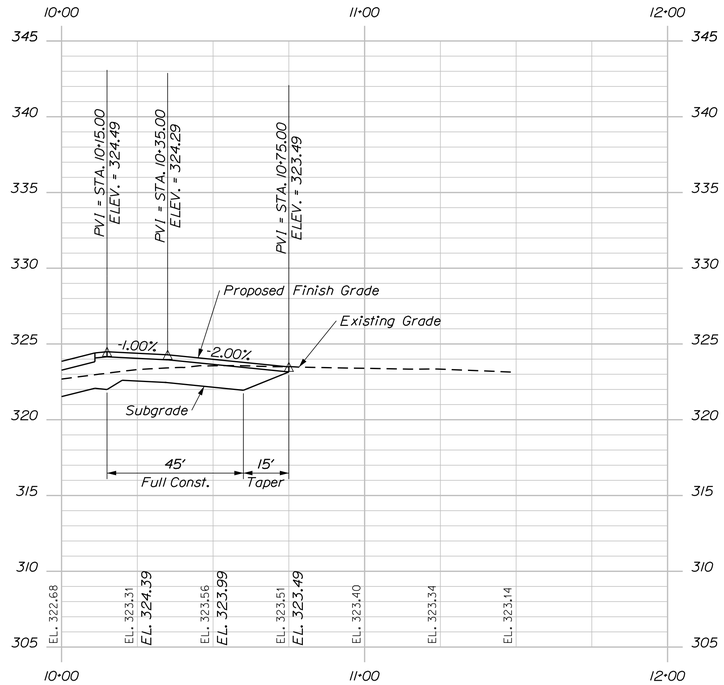

BEAVER BROOK ROAD PROFILE

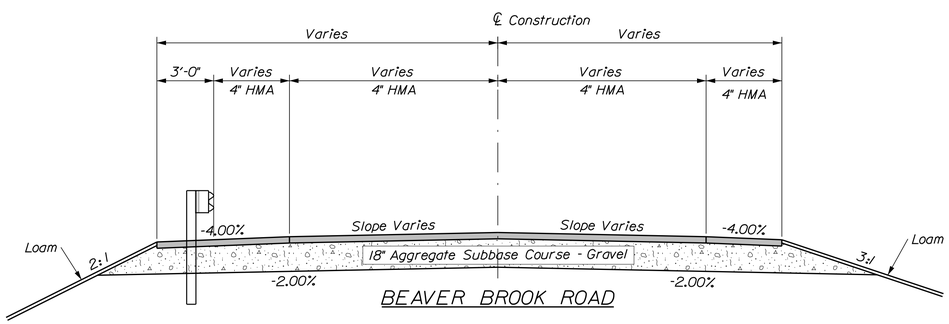

BEAVER BROOK ROAD

Route 5 - Superelevation Table				
Left Shoulder	Left Travelway	Station	Right Travelway	Right Shoulder
-5.00%	-5.00%	148+00	-3.53%	-3.53%
-5.00%	-5.00%	148+25	-2.46%	-2.46%
-5.00%	-5.00%	148+50	-1.39%	-1.39%
-5.00%	-5.00%	148+75	-0.32%	-0.32%
-5.00%	-5.00%	149+00	0.75%	0.75%
-5.00%	-5.00%	149+25	1.82%	1.82%
-5.00%	-5.00%	149+50	2.89%	2.89%
-5.00%	-5.00%	149+75	3.96%	3.96%
-5.00%	-5.00%	150+00	5.00%	5.00%
-5.00%	-5.00%	152+00	5.00%	4.00%
-5.00%	-5.00%	152+25	5.00%	3.00%
-5.00%	-5.00%	152+50	5.00%	2.00%
-5.00%	-5.00%	152+75	5.00%	1.00%
-5.00%	-5.00%	153+00	5.00%	0.00%
-5.00%	-5.00%	153+25	5.00%	-1.00%
-5.00%	-5.00%	153+50	5.00%	-2.00%
-5.00%	-5.00%	153+75	5.00%	-2.00%
-5.00%	-5.00%	154+00	5.00%	-2.00%
-5.00%	-5.00%	154+25	5.00%	-2.00%
-	-5.00%	154+50	3.52%	-
-	-5.00%	154+75	2.04%	-
-	-5.00%	155+00	0.56%	-

NOTES

1. The pavement, base and subbase depths as shown on the plans are intended to be nominal.

2. When superelevation exceeds the slope of the low side shoulder, the low side shoulder shall have the same slope as the travelway.

3. Crowns for both normal and superelevation sections for all courses of subbase and pavement shall be straight.

4. The algebraic difference between the shoulder and travelway cross slopes "rollover" shall not exceed 8%.

5. The stationing shown under each typical is approximate.

* See Signing and Striping Plan for pavement markings and travelway widths. Travelway pavement structure widened to 12' on inside of curve to accommodate truck off-tracking.

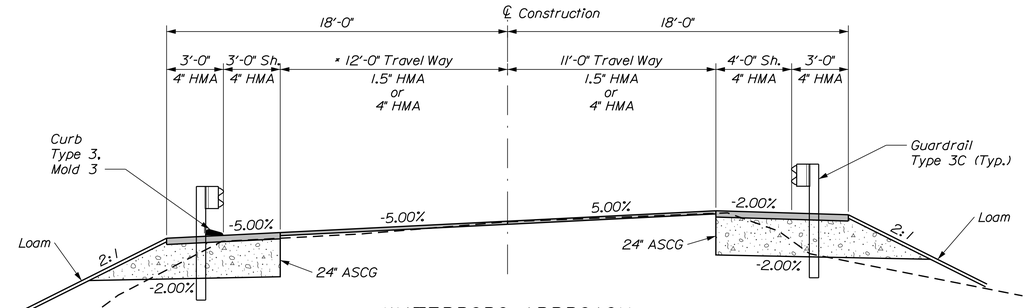

WATERBORO APPROACH

Mill and Fill with Boxed Shoulders
Mill 1.5" or 4" Depth on Centerline and
Mill To Designed Cross Slope
Sta. 147+75 to Sta 149+50

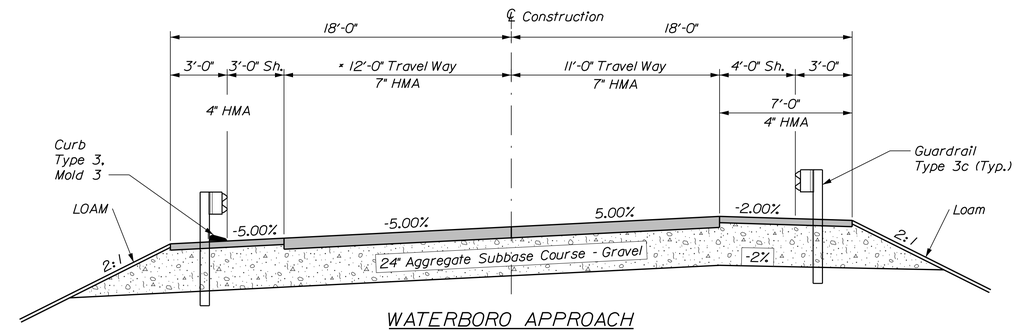

WATERBORO APPROACH

Full Construction
Sta. 149+50 to 150+15

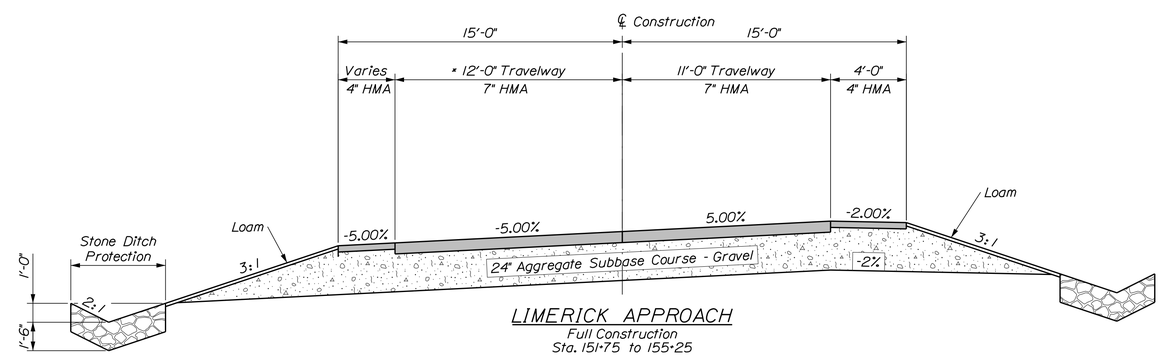

LIMERICK APPROACH

Full Construction
Sta. 151+75 to 155+25

STATE OF MAINE
DEPARTMENT OF TRANSPORTATION

STP-2047(600)

WIN 20476.00

BRIDGE NO. 2807

BRIDGE PLANS

Hoyle, Tanner & Associates, Inc.
www.hoyletanner.com

PROJ. MANAGER	M. PARLIN	BY	DATE
DESIGN-DETAILED	RSW	PBD	APR 2016
CHECKED-REVIEWED	JCR	AML	APR 2016
DESIGN2-DETAILED2	BKM	BKM	APR 2016
DESIGN3-DETAILED3			
REVISIONS 1			
REVISIONS 2			
REVISIONS 3			
REVISIONS 4			
FIELD CHANGES			

STIMSON BRIDGE
LITTLE OSSIPEE RIVER
WATERBORO-LIMERICK YORK COUNTY

APPROACH TYPICAL SECTIONS

SHEET NUMBER

10

OF 41

Filename: ...\010_Approach Typical Sections.dgn Division: BRIDGE Username: common Date:4/19/2016

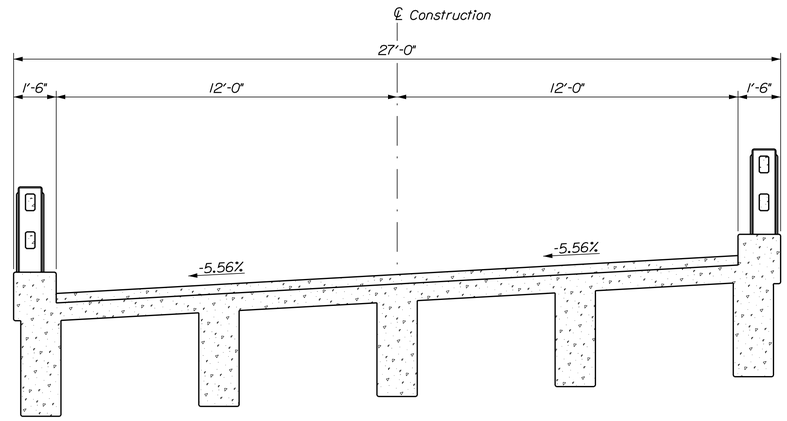

EXISTING BRIDGE SECTION

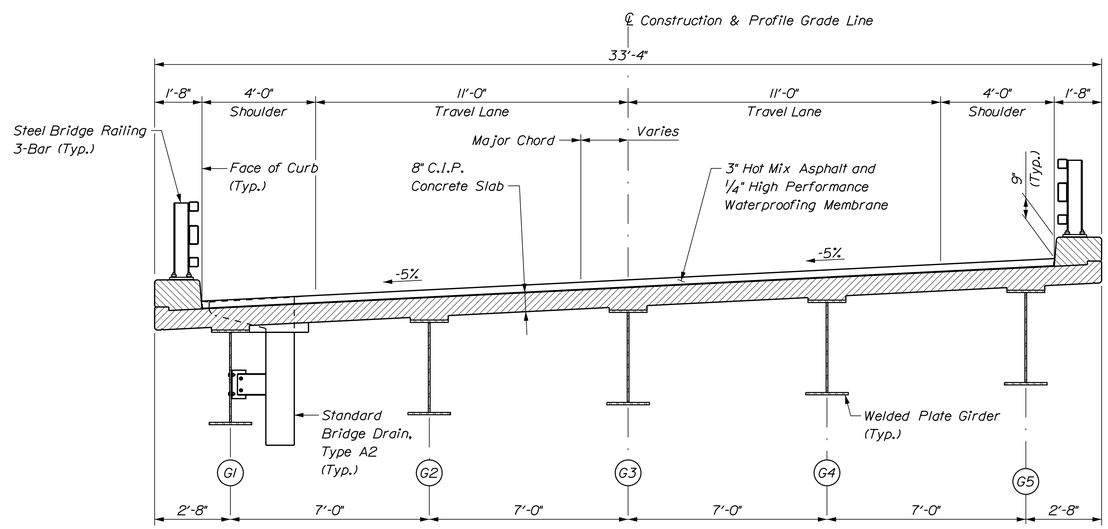

PROPOSED BRIDGE SECTION

STATE OF MAINE
DEPARTMENT OF TRANSPORTATION

STP-2047(600)

WIN
20476.00

BRIDGE NO. 2807

BRIDGE PLANS

Hoyle, Tanner & Associates, Inc.
www.hoyletanner.com

PROJ. MANAGER	M. PARLIN	BY	DATE
DESIGN-DETAILED	RSW	PBD	APR 2016
CHECKED-REVIEWED	JCR	AML	APR 2016
DESIGN2-DETAILED2	BKM	BKM	APR 2016
DESIGN3-DETAILED3			
REVISIONS 1			
REVISIONS 2			
REVISIONS 3			
REVISIONS 4			
FIELD CHANGES			

STIMSON BRIDGE
LITTLE OSSIPEE RIVER
WATERBORO-LIMERICK YORK COUNTY

BRIDGE TYPICAL SECTIONS

SHEET NUMBER
11
OF 41

Filename: ...\BRIDGE\MSTA\011_Btypical.dgn Division: BRIDGE Username: common Date:4/19/2016

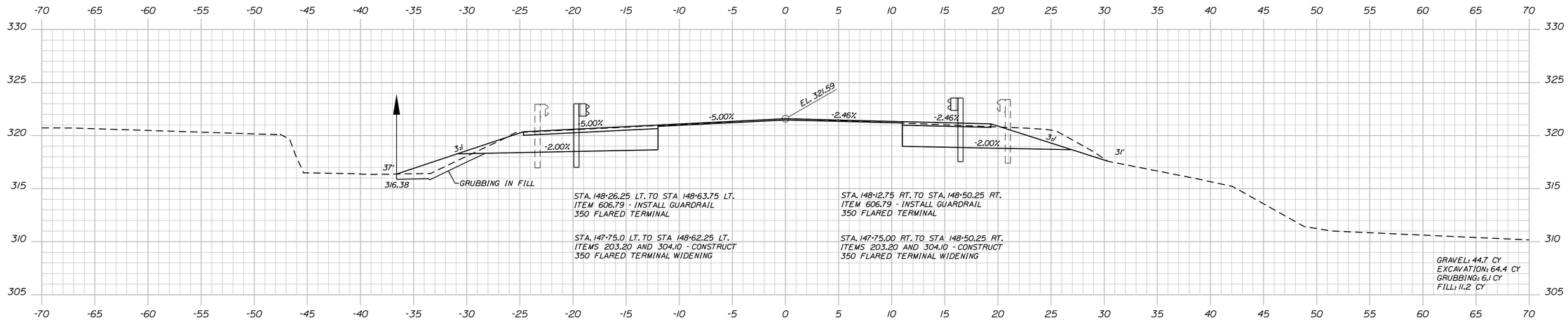

148+25.00

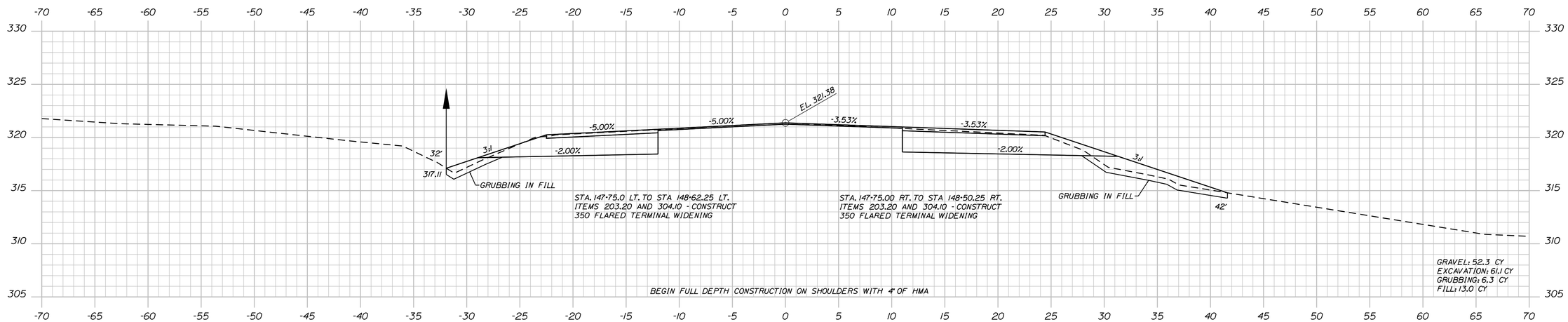

148+00.00

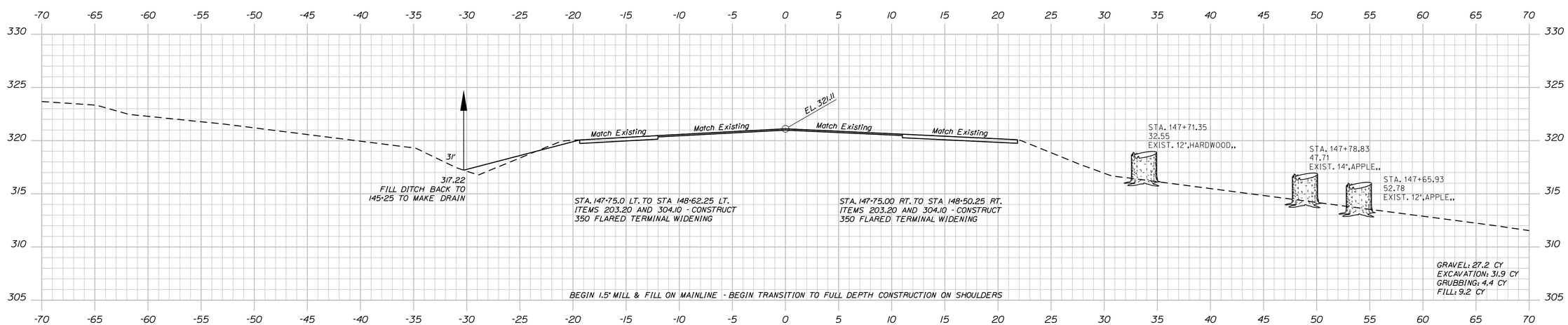

147+75.00

STATE OF MAINE
DEPARTMENT OF TRANSPORTATION

STP-2047(600)

WIN 20476.00

BRIDGE NO. 2807

BRIDGE PLANS

Hoyle, Tanner & Associates, Inc.
www.hoyletanner.com

PROJ. MANAGER	M. P-ARLIN	BY	DATE
DESIGN-DETAILED	RSW	PBD	APR 2016
CHECKED-REVIEWED	JCR	AML	APR 2016
DESIGN2-DETAILED2	BKM	BKM	APR 2016
DESIGN3-DETAILED3			
REVISIONS 1			
REVISIONS 2			
REVISIONS 3			
REVISIONS 4			
FIELD CHANGES			

STIMSON BRIDGE
LITTLE OSSIPEE RIVER
WATERBORO-LIMERICK YORK COUNTY

CROSS SECTIONS

SHEET NUMBER
12
OF 41

Sta. 148+00.00 to Sta. 148+25.00

Filename: ...\MSTA\012_XSECT_148+00_001.dgn Division: BRIDGE Username: common Date:4/19/2016

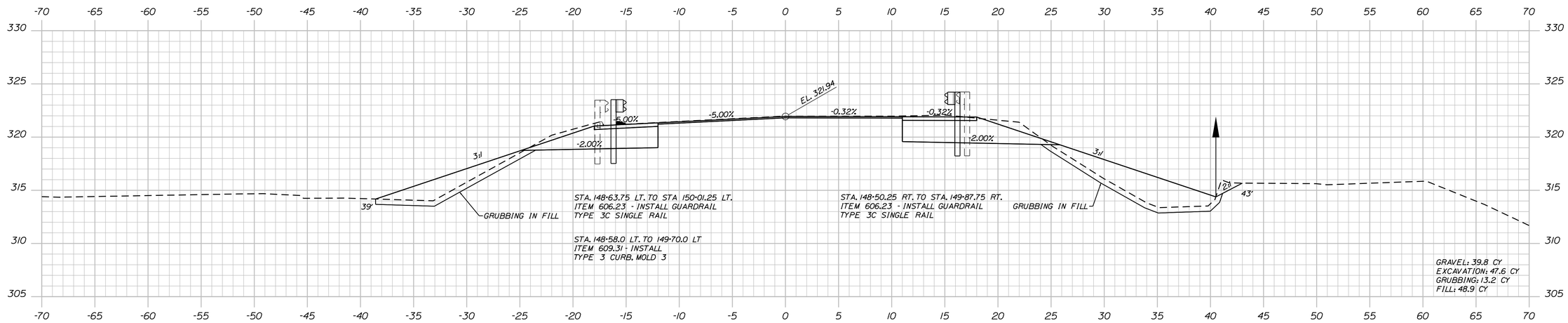

148+75.00

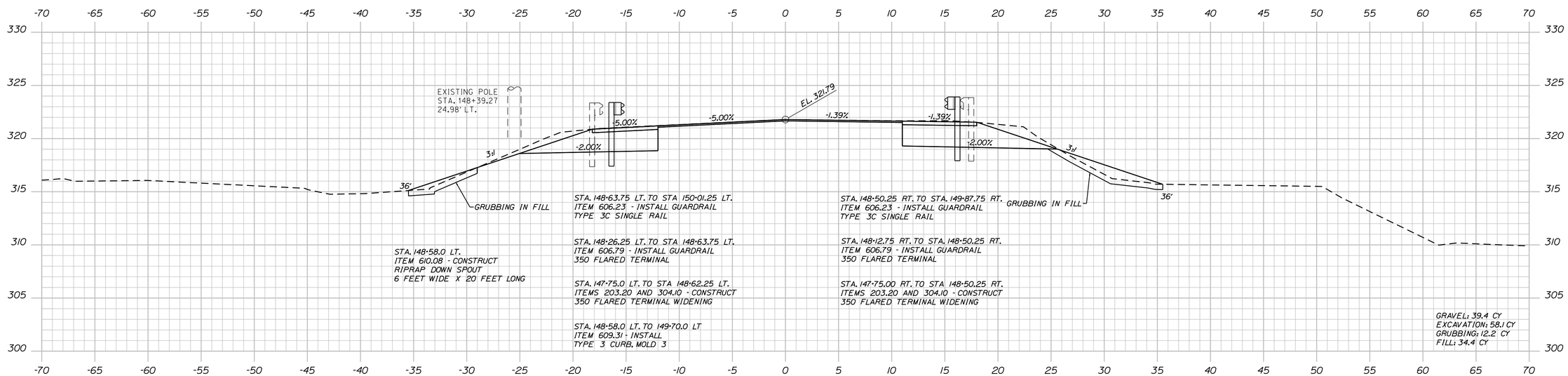

148+50.00

STATE OF MAINE
DEPARTMENT OF TRANSPORTATION

STP-2047(600)

WIN 20476.00

BRIDGE NO. 2807

BRIDGE PLANS

Hoyle, Tanner & Associates, Inc.
www.hoyletanner.com

PROJ. MANAGER	M. PARLIN	BY	DATE
DESIGN-DETAILED	RSW	PBD	APR 2016
CHECKED-REVIEWED	JCR	AML	APR 2016
DESIGN2-DETAILED2	BKM	BKM	APR 2016
DESIGN3-DETAILED3			------
REVISIONS 1			------
REVISIONS 2			------
REVISIONS 3			------
REVISIONS 4			------
FIELD CHANGES			------

STIMSON BRIDGE
LITTLE OSSIPEE RIVER
WATERBORO-LIMERICK YORK COUNTY

CROSS SECTIONS

SHEET NUMBER
13
OF 41

Sta. 148+50.00 to Sta. 148+75.00

Filename: ...\MSTA\013_XSECT_148+50_002.dgn Division: BRIDGE Username: common Date:4/19/2016

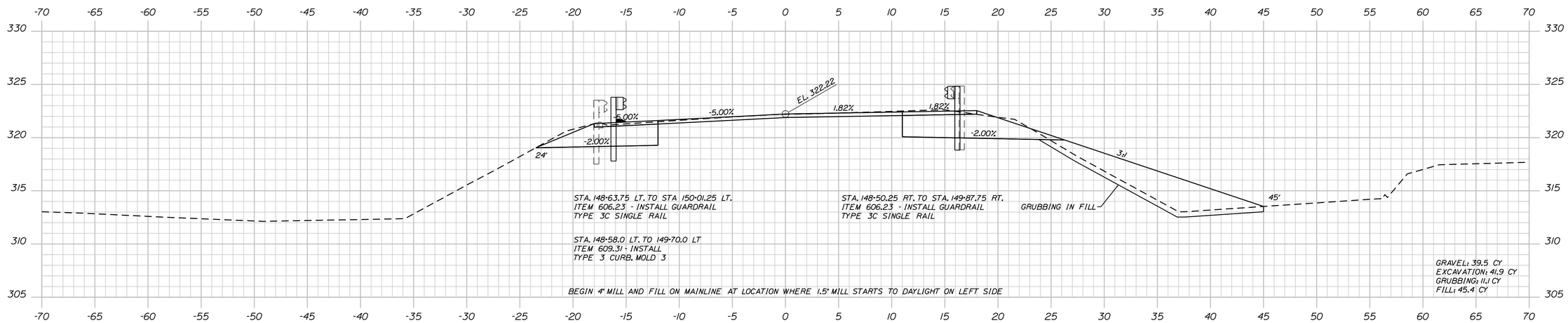

149+25.00

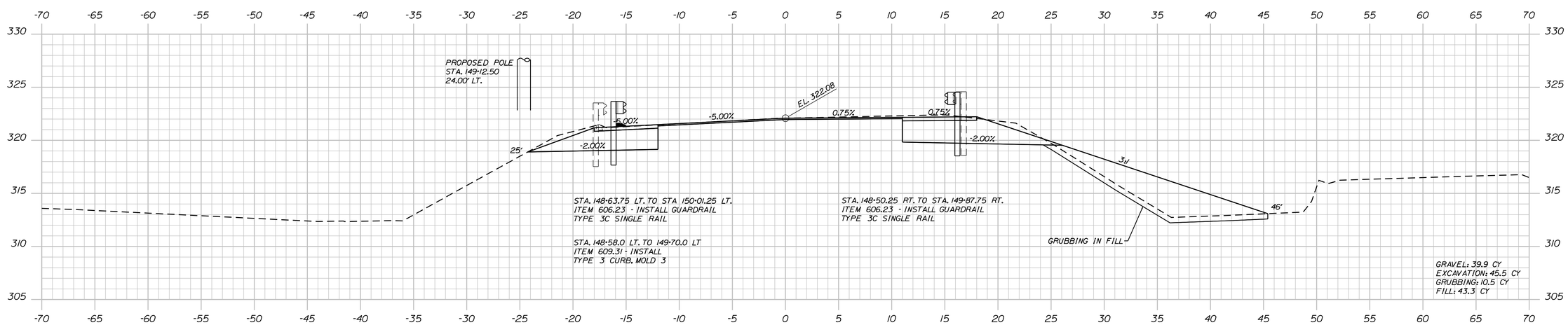

149+00.00

STATE OF MAINE
DEPARTMENT OF TRANSPORTATION

STP-2047(600)

WIN 20476.00

BRIDGE NO. 2807

BRIDGE PLANS

Hoyle, Tanner & Associates, Inc.
www.hoyletanner.com

		BY	DATE
PROJ. MANAGER	M. PARLIN		
DESIGN-DETAILED	RSW	PBD	APR 2016
CHECKED-REVIEWED	JCR	AML	APR 2016
DESIGN2-DETAILED2	BKM	BKM	APR 2016
DESIGN3-DETAILED3			
REVISIONS 1			
REVISIONS 2			
REVISIONS 3			
REVISIONS 4			
FIELD CHANGES			

STIMSON BRIDGE
LITTLE OSSIPEE RIVER
WATERBORO-LIMERICK YORK COUNTY

CROSS SECTIONS

SHEET NUMBER
14
OF 41

Sta. 149+00.00 to Sta. 149+25.00

Filename: ...\MSTA\014_XSECT_149+00_003.dgn Division: BRIDGE Username: common Date:4/19/2016

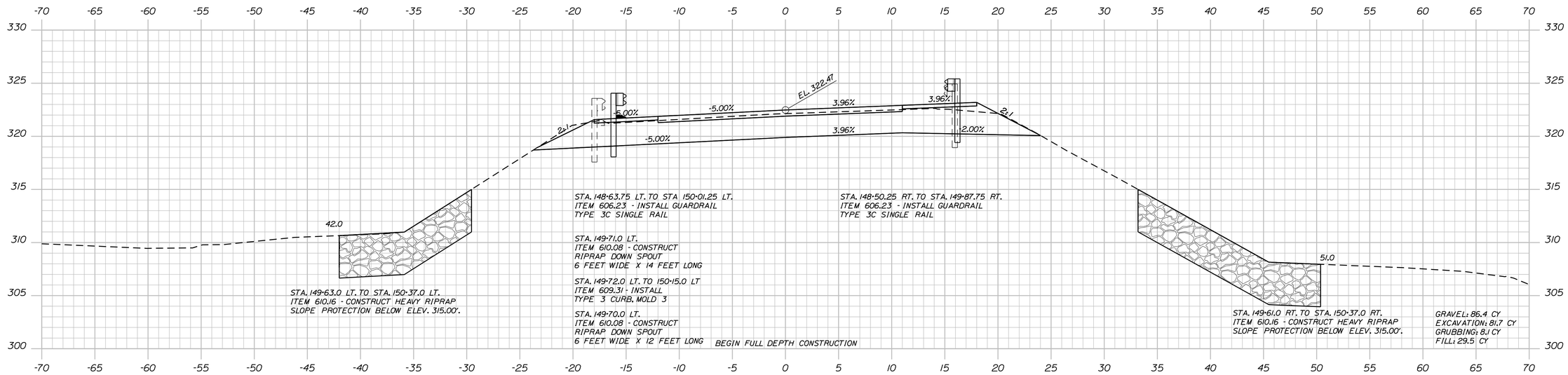

149+75.00

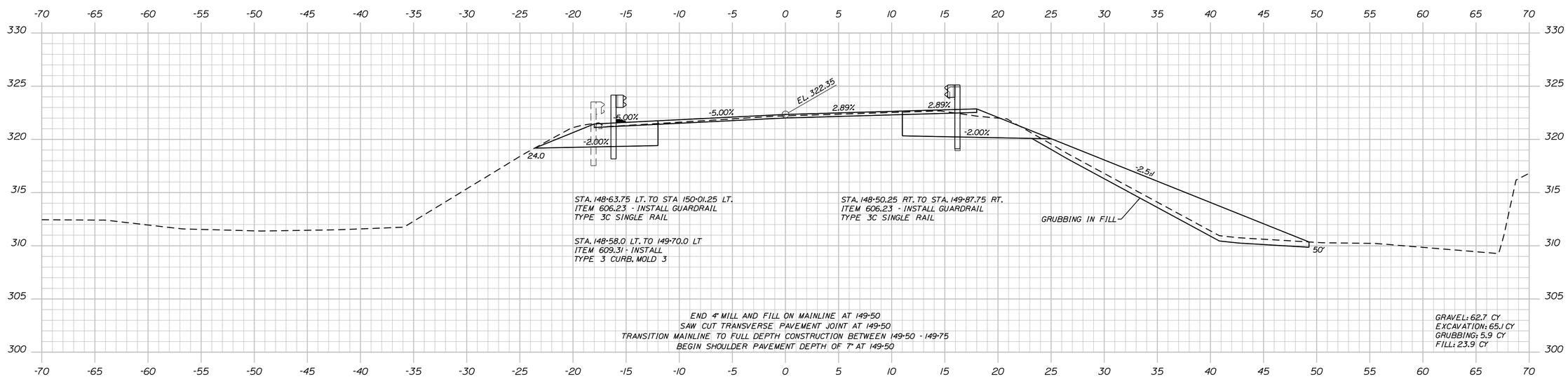

149+50.00

STATE OF MAINE
DEPARTMENT OF TRANSPORTATION

STP-2047(600)

WIN 20476.00

BRIDGE NO. 2807

BRIDGE PLANS

Hoyle, Tanner & Associates, Inc.
www.hoyletanner.com

PROJ. MANAGER	M. PARLIN	BY	DATE
DESIGN-DETAILED	RSW	PBD	APR 2016
CHECKED-REVIEWED	JCR	AML	APR 2016
DESIGN2-DETAILED2	BKM	BKM	APR 2016
DESIGN3-DETAILED3			------
REVISIONS 1			------
REVISIONS 2			------
REVISIONS 3			------
REVISIONS 4			------
FIELD CHANGES			------

STIMSON BRIDGE
LITTLE OSSIPEE RIVER
WATERBORO-LIMERICK YORK COUNTY

CROSS SECTIONS

SHEET NUMBER
15
OF 41

Sta. 149+50.00 to Sta. 149+75.00

Filename: ...\MSTA\015_XSECT_149+50_004.dgn Division: BRIDGE Username: common Date:4/19/2016

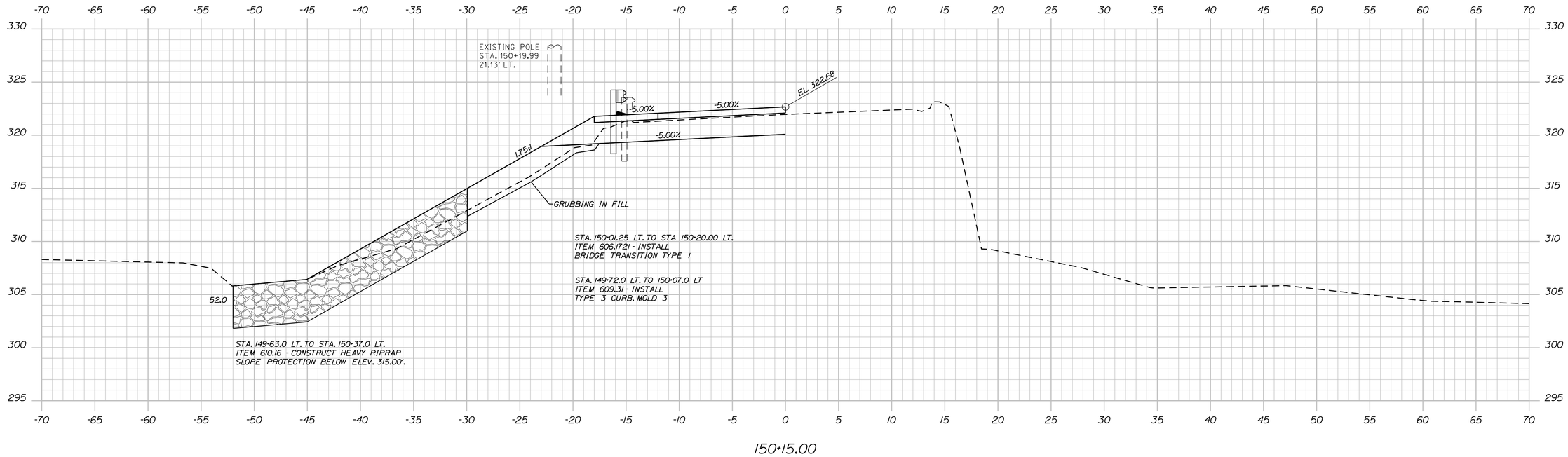

150+15.00

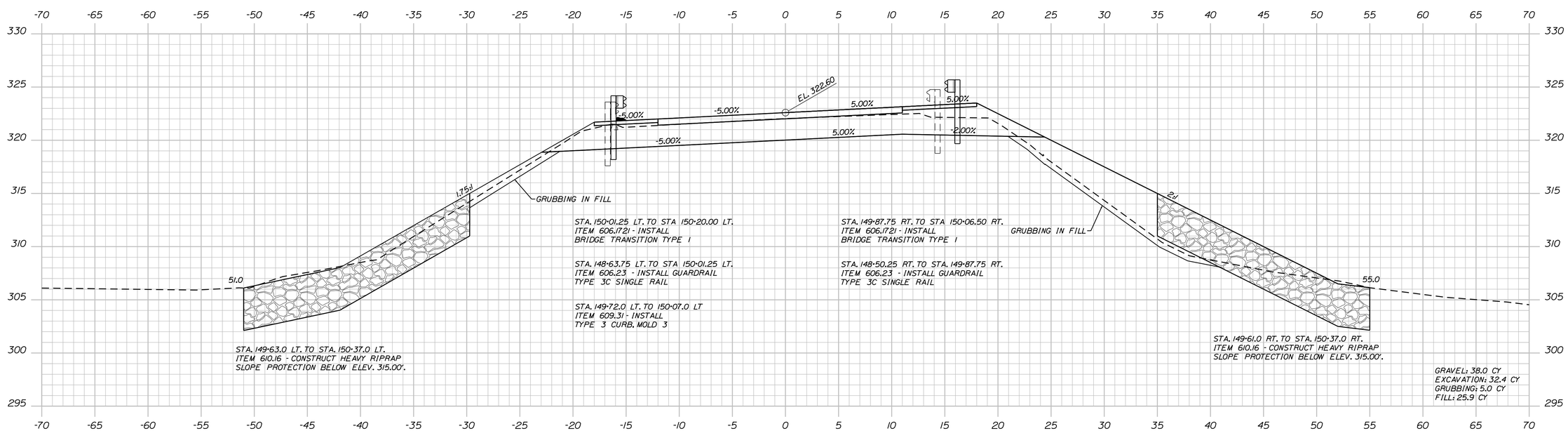

150+00.00

STATE OF MAINE
DEPARTMENT OF TRANSPORTATION

STP-2047(600)

WIN 20476.00

BRIDGE NO. 2807

BRIDGE PLANS

Hoyle, Tanner & Associates, Inc.
www.hoyletanner.com

PROJ. MANAGER	M. PARLIN	BY	DATE
DESIGN-DETAILED	RSW	PBD	APR 2016
CHECKED-REVIEWED	JCR	AML	APR 2016
DESIGN2-DETAILED2	BKM	BKM	APR 2016
DESIGN3-DETAILED3			------
REVISIONS 1	------	------	------
REVISIONS 2	------	------	------
REVISIONS 3	------	------	------
REVISIONS 4	------	------	------
FIELD CHANGES	------	------	------

STIMSON BRIDGE
LITTLE OSSIPEE RIVER
WATERBORO-LIMERICK YORK COUNTY

CROSS SECTIONS

SHEET NUMBER
16
OF 41

Sta. 150+00.00 to Sta. 150+15.00

Filename: ...\MSTA\016_XSECT_150+00_005.dgn Division: BRIDGE Username: common Date:4/19/2016

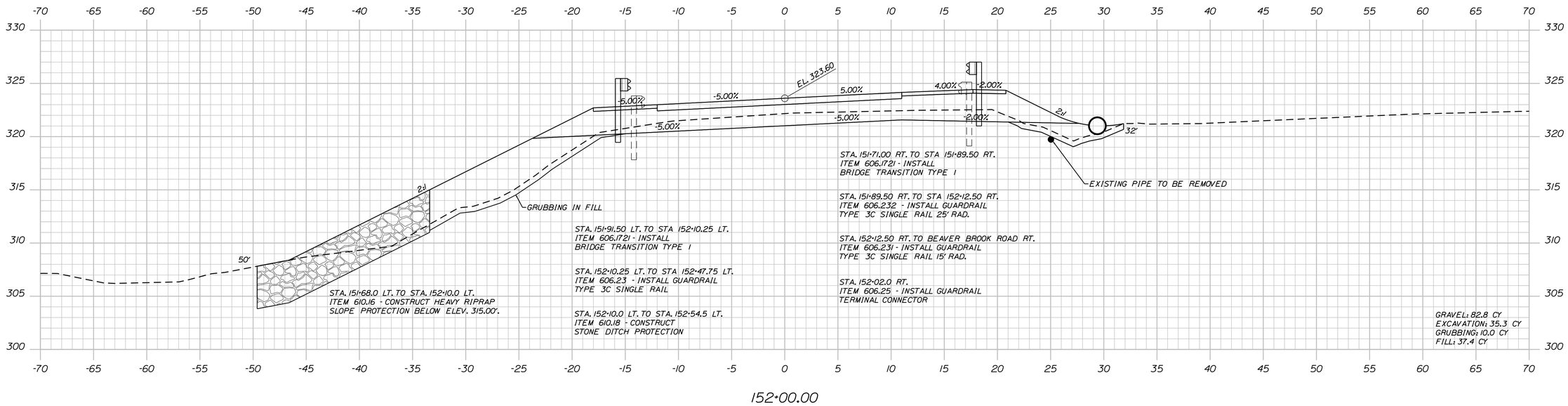

152+00.00

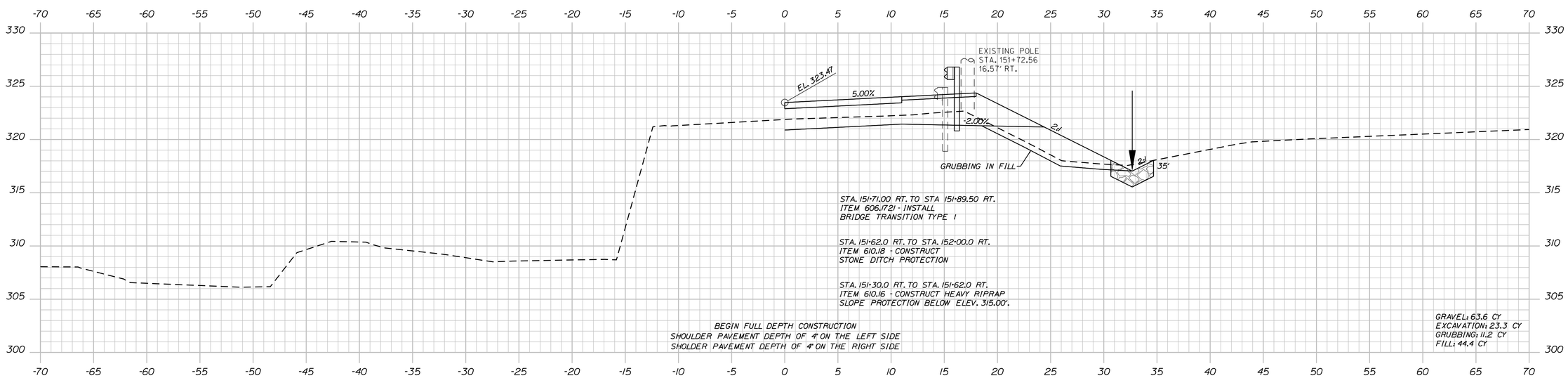

151+75.00

STATE OF MAINE
DEPARTMENT OF TRANSPORTATION

STP-2047(600)

WIN 20476.00

BRIDGE NO. 2807

BRIDGE PLANS

Hoyle, Tanner & Associates, Inc.
www.hoyletanner.com

PROJ. MANAGER	M. PARLIN	BY	DATE
DESIGN-DETAILED	RSW	PBD	APR 2016
CHECKED-REVIEWED	JCR	AML	APR 2016
DESIGN2-DETAILED2	BKM	BKM	APR 2016
DESIGN3-DETAILED3			------
REVISIONS 1	------	------	------
REVISIONS 2	------	------	------
REVISIONS 3	------	------	------
REVISIONS 4	------	------	------
FIELD CHANGES	------	------	------

STIMSON BRIDGE
LITTLE OSSIPEE RIVER
WATERBORO-LIMERICK YORK COUNTY

CROSS SECTIONS

SHEET NUMBER
17
OF 41

Sta. 151+75.00 to Sta. 152+00.00

Filename: ...\MSTA\017_XSECT_151+75_006.dgn Division: BRIDGE Username: common Date:4/19/2016

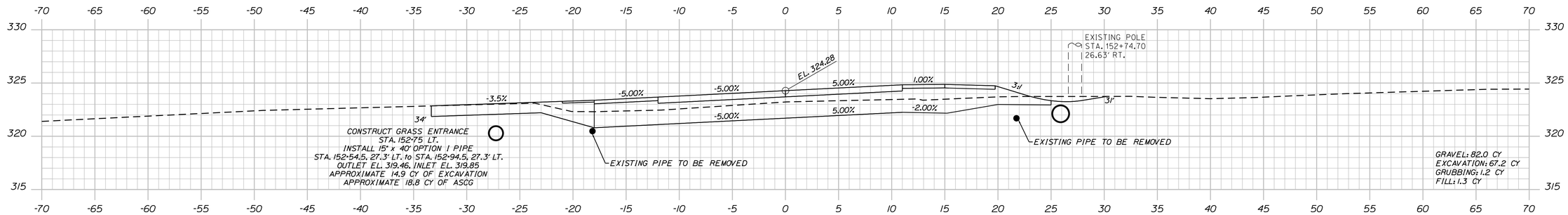

152+75.00

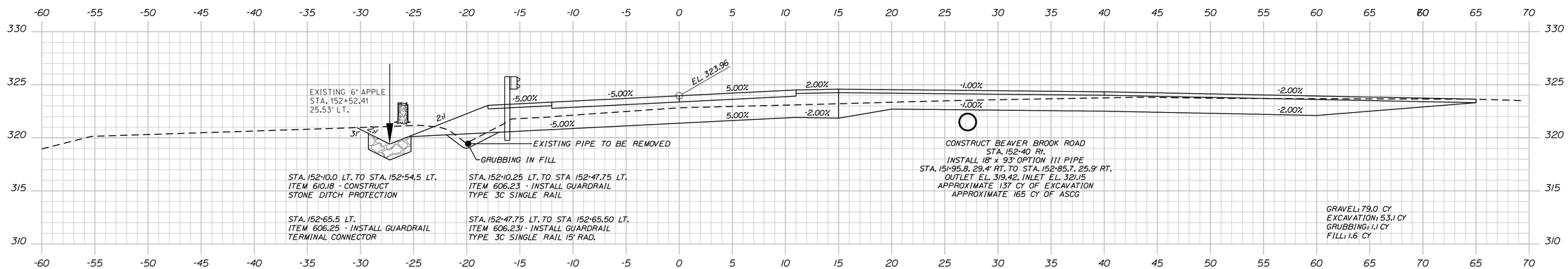

152+50.00

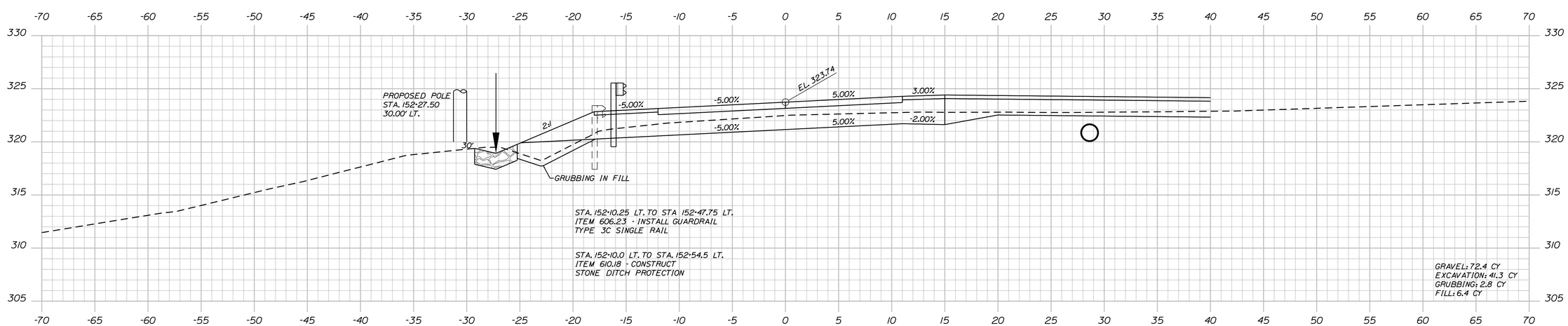

152+25.00

STATE OF MAINE
DEPARTMENT OF TRANSPORTATION

STP-2047(600)

WIN 20476.00

BRIDGE NO. 2807

BRIDGE PLANS

Hoyle, Tanner & Associates, Inc.
www.hoyletanner.com

	M. PARLIN	BY	DATE
PROJ. MANAGER			
DESIGN-DETAILED	RSW	PBD	APR 2016
CHECKED-REVIEWED	JCR	AML	APR 2016
DESIGN2-DETAILED2	BKM	BKM	APR 2016
DESIGN3-DETAILED3			
REVISIONS 1			
REVISIONS 2			
REVISIONS 3			
REVISIONS 4			
FIELD CHANGES			

STIMSON BRIDGE
LITTLE OSSIPEE RIVER
WATERBORO-LIMERICK YORK COUNTY

CROSS SECTIONS

SHEET NUMBER
18
OF 41

Filename: ...\MSTA\018_XSECT_152+25_007.dgn Division: BRIDGE Username: common Date:4/19/2016

Sta. 152+25.00 to Sta. 152+75.00

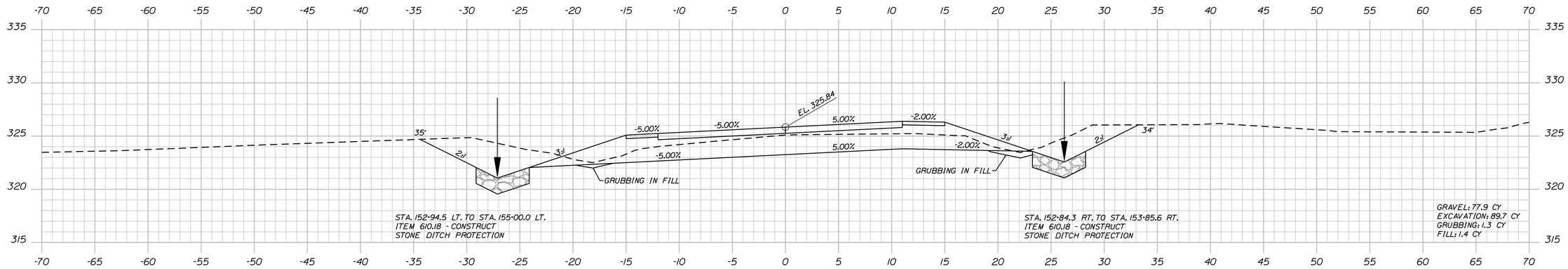

153+50.00

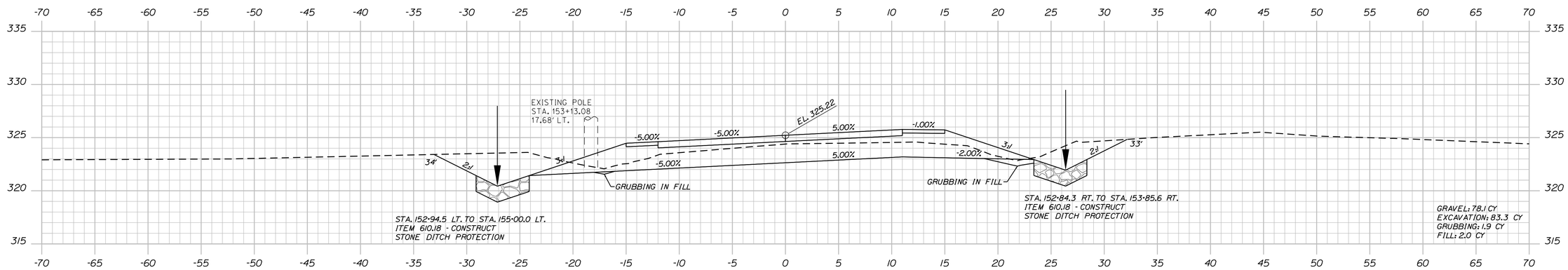

153+25.00

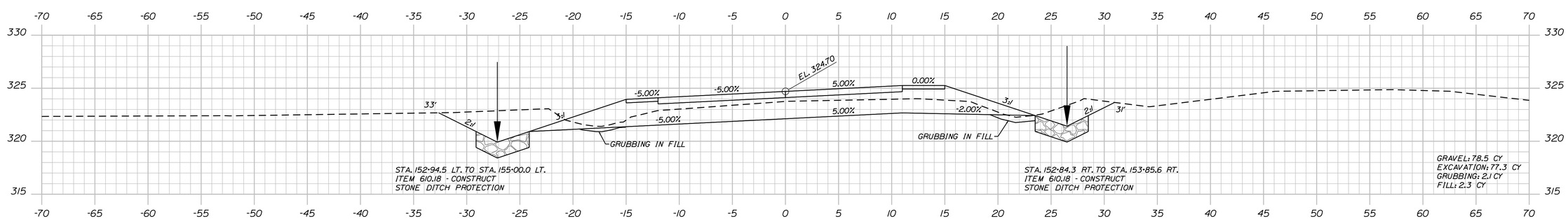

153+00.00

Sta. 153+00.00 to Sta. 153+50.00

STATE OF MAINE
DEPARTMENT OF TRANSPORTATION

STP-2047(600)

WIN 20476.00

BRIDGE NO. 2807

BRIDGE PLANS

Hoyle, Tanner & Associates, Inc.
www.hoyletanner.com

PROJ. MANAGER	M. PARLIN	BY	DATE
DESIGN-DETAILED	RSW	PBD	APR 2016
CHECKED-REVIEWED	JCR	AML	APR 2016
DESIGN2-DETAILED2	BKM	BKM	APR 2016
DESIGN3-DETAILED3			
REVISIONS 1			
REVISIONS 2			
REVISIONS 3			
REVISIONS 4			
FIELD CHANGES			

STIMSON BRIDGE
LITTLE OSSIPEE RIVER
WATERBORO-LIMERICK YORK COUNTY

CROSS SECTIONS

SHEET NUMBER
19
OF 41

Filename: ...\MSTA\019_XSECT_153+00_008.dgn Division: BRIDGE Username: common Date:4/19/2016

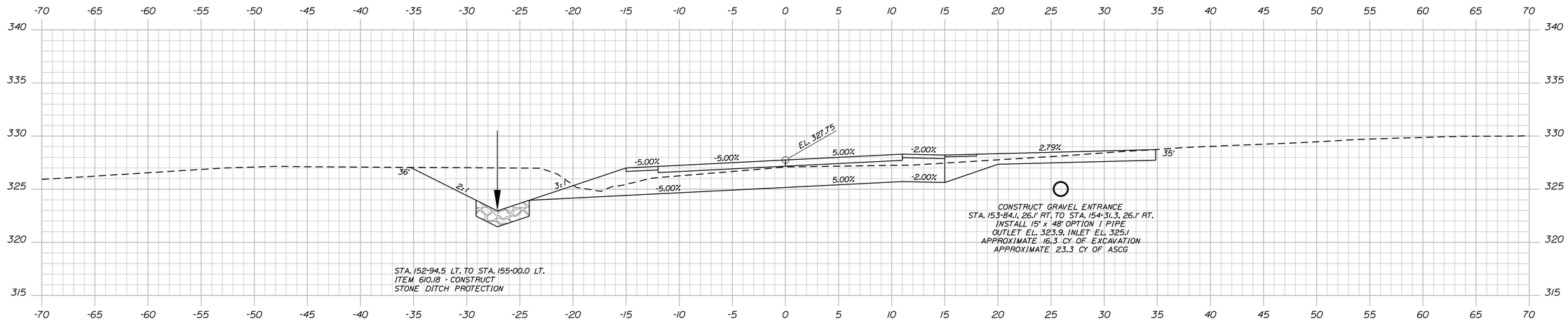

154+10.80

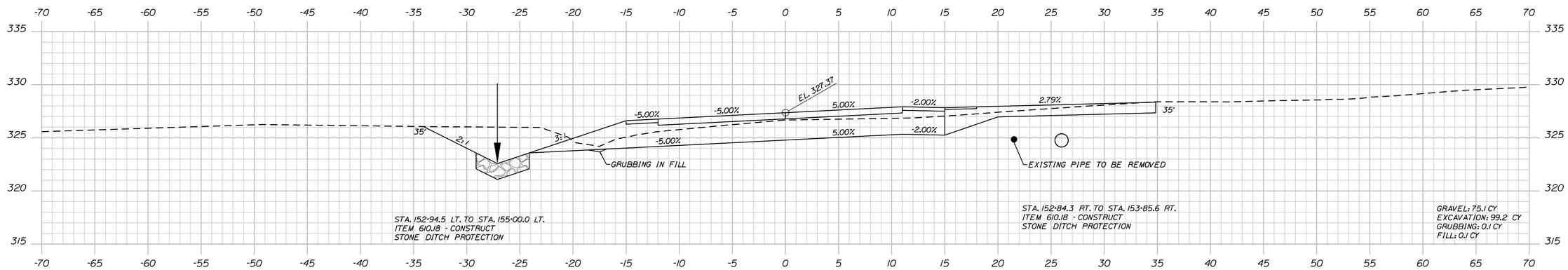

154+00.00

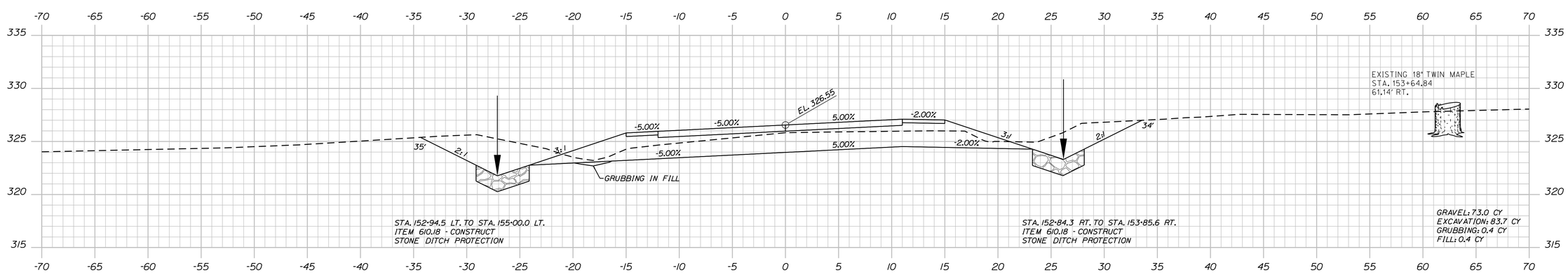

153+75.00

STATE OF MAINE
DEPARTMENT OF TRANSPORTATION

STP-2047(600)

WIN 20476.00

BRIDGE NO. 2807

BRIDGE PLANS

Hoyle, Tanner & Associates, Inc.
www.hoyletanner.com

PROJ. MANAGER	M. PARLIN	BY	DATE
DESIGN-DETAILED	RSW	PBD	APR 2016
CHECKED-REVIEWED	JCR	AML	APR 2016
DESIGN2-DETAILED2	BKM	BKM	APR 2016
DESIGN3-DETAILED3			
REVISIONS 1			
REVISIONS 2			
REVISIONS 3			
REVISIONS 4			
FIELD CHANGES			

STIMSON BRIDGE
LITTLE OSSIPEE RIVER
WATERBORO-LIMERICK YORK COUNTY

CROSS SECTIONS

SHEET NUMBER
20
OF 41

Sta. 153+75.00 to Sta. 154+10.80

Filename: ...\MSTA\020_XSECT_153+75_009.dgn Division: BRIDGE Username: common Date:4/19/2016

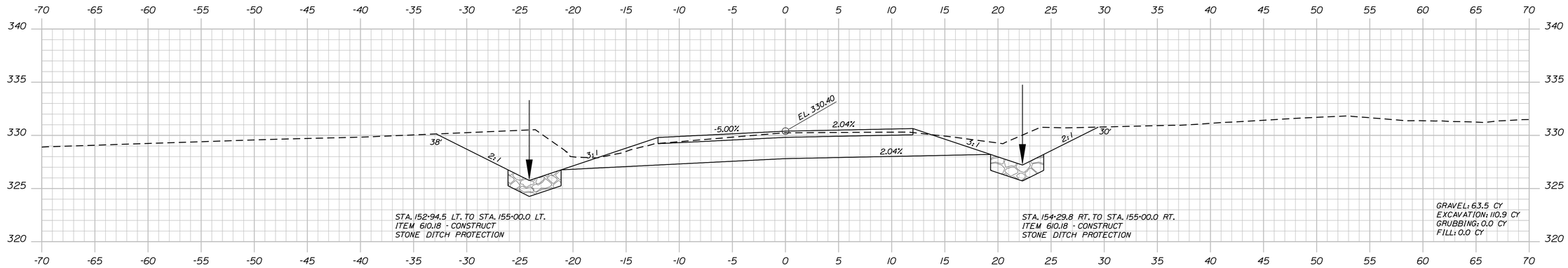

154+75.00

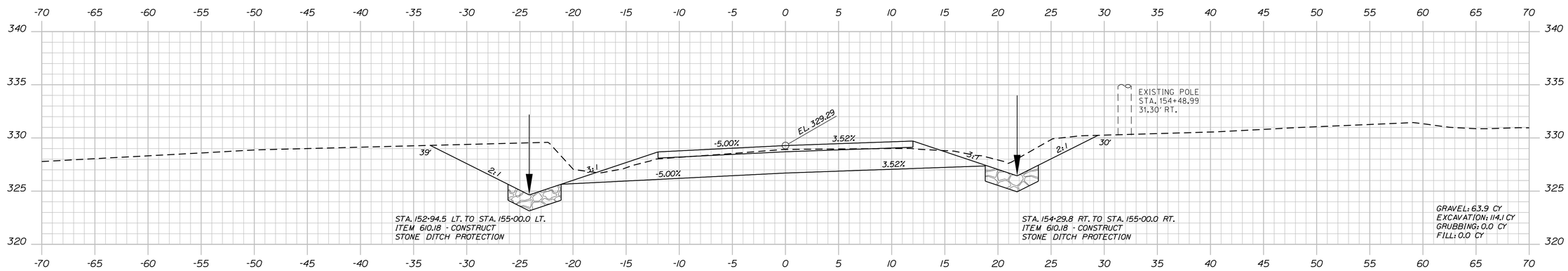

154+50.00

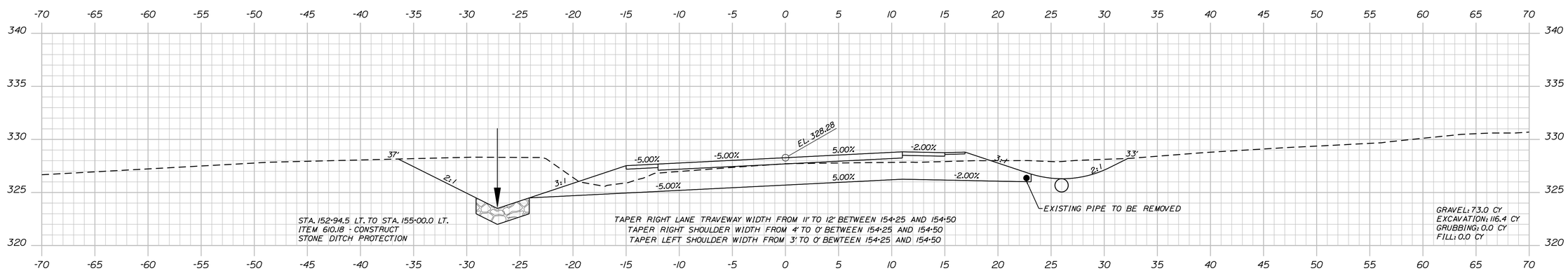

154+25.00

STATE OF MAINE
DEPARTMENT OF TRANSPORTATION

STP-2047(600)

WIN 20476.00

BRIDGE NO. 2807

BRIDGE PLANS

Hoyle, Tanner & Associates, Inc.
www.hoyletanner.com

PROJ. MANAGER	M. PARLIN	BY	DATE
DESIGN-DETAILED	RSW	PBD	APR 2016
CHECKED-REVIEWED	JCR	AML	APR 2016
DESIGN2-DETAILED2	BKM	BKM	APR 2016
DESIGN3-DETAILED3			
REVISIONS 1			
REVISIONS 2			
REVISIONS 3			
REVISIONS 4			
FIELD CHANGES			

STIMSON BRIDGE
LITTLE OSSIPEE RIVER
WATERBORO-LIMERICK YORK COUNTY

CROSS SECTIONS

SHEET NUMBER
21
OF 41

Filename: ...\MSTA\021_XSECT_154+25_010.dgn Division: BRIDGE Username: common Date:4/19/2016

Sta. 154+25.00 to Sta. 154+75.00

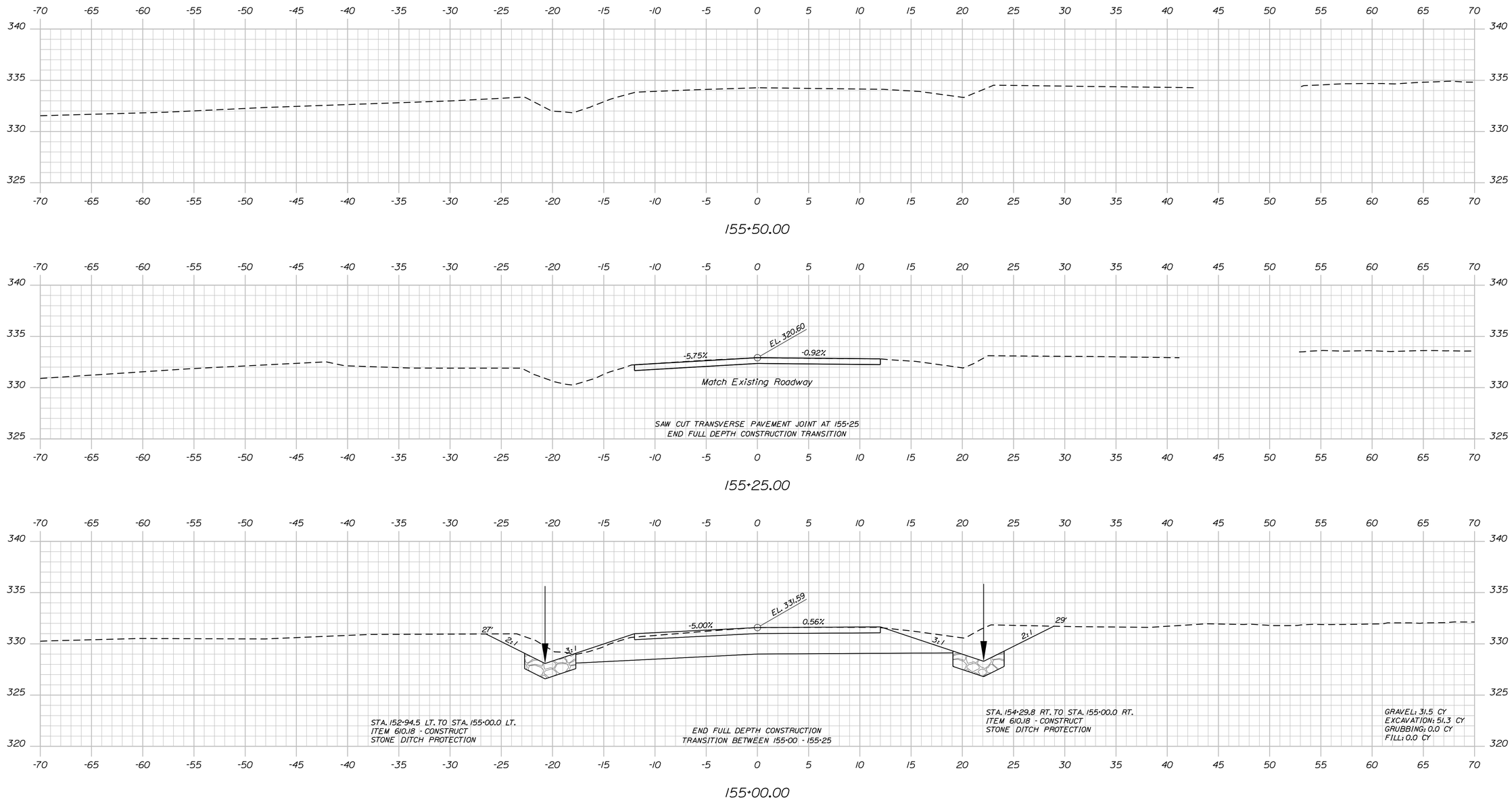

STATE OF MAINE
DEPARTMENT OF TRANSPORTATION

STP-2047(600)

WIN 20476.00

BRIDGE NO. 2807

BRIDGE PLANS

Hoyle, Tanner & Associates, Inc.
www.hoyletanner.com

PROJ. MANAGER	M. PARLIN	BY	DATE
DESIGN-DETAILED	RSW	PBD	APR 2016
CHECKED-REVIEWED	JCR	AML	APR 2016
DESIGN2-DETAILED2	BKM	BKM	APR 2016
DESIGN3-DETAILED3			
REVISIONS 1			
REVISIONS 2			
REVISIONS 3			
REVISIONS 4			
FIELD CHANGES			

STIMSON BRIDGE
LITTLE OSSIPEE RIVER
WATERBORO-LIMERICK YORK COUNTY

CROSS SECTIONS

SHEET NUMBER
22
OF 41

Sta. 155+00.00 to Sta. 155+50.00

Filename: ...\MSTA\022_XSECT_155+00_011.dgn Division: BRIDGE Username: common Date:4/19/2016

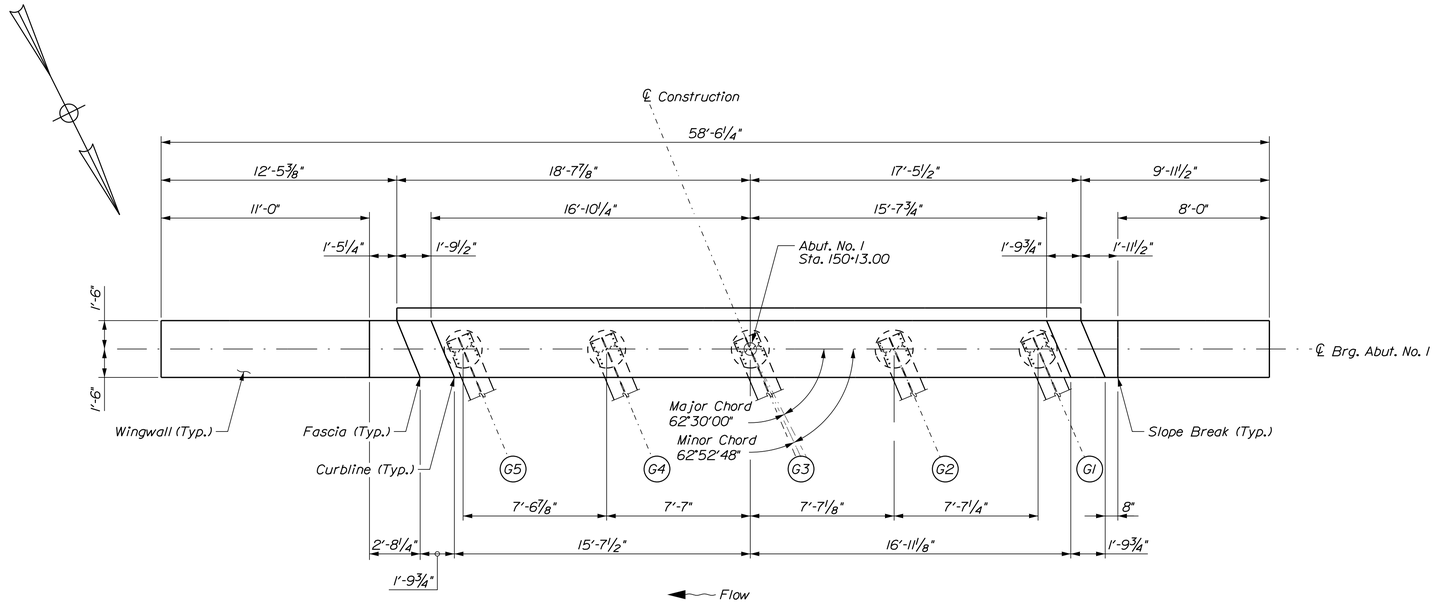

PLAN

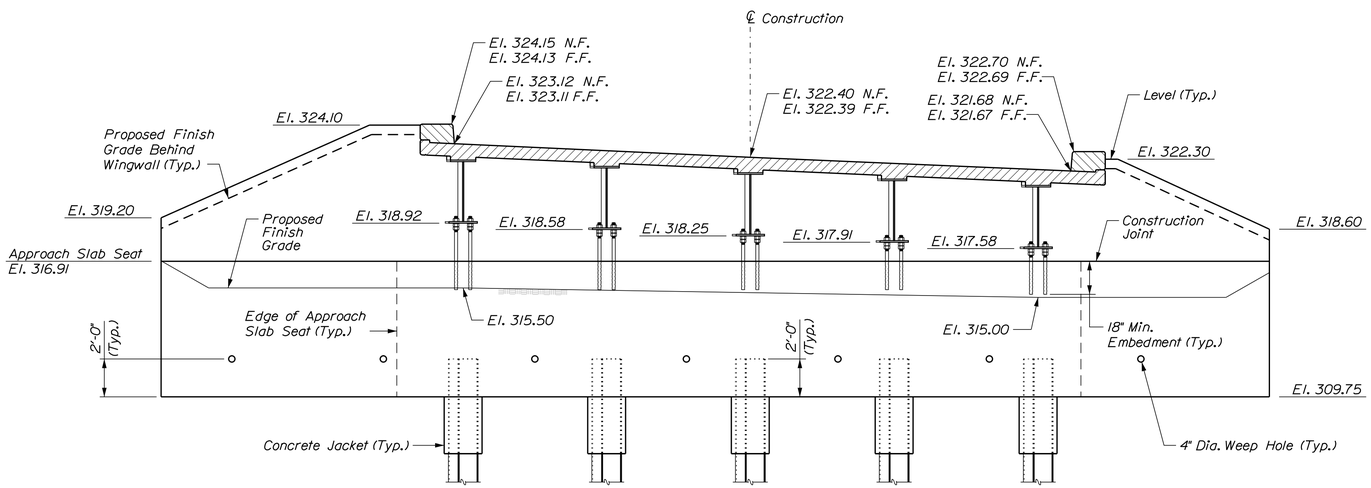

ELEVATION

Note
1. Wearing Surface and End
Cross Frames Omitted for Clarity.

ABUTMENT NOTES

1. Structural Earth Excavation, Abutments and Retaining Walls, required more than 12 inches below the bottom of the structure, will be paid for in accordance with Standard Specifications Section 206, Structural Excavation.

2. Reinforcing steel shall have a minimum concrete cover of 2 inches unless otherwise noted.

3. Cover joints where waterstops are not required in accordance with Standard Details Section 502(01).

4. Abutments and wingwalls shall be backfilled with Granular Borrow. Pay limits will be in accordance with the Typical Section on Abutment No. 2 Plan and Elevation sheet.

5. Payment for the concrete jackets around the tops of the H-piles will be considered incidental to related Contract Items. No separate payment will be made. Fill concrete may be used for the concrete jackets.

6. Place 4" diameter weep holes through abutment at 8'-0" maximum spacing. The exact location shall be determined by the Resident.

7. Install drainage geocomposite behind the abutments and wingwalls up to the approach slab seat elevation and in accordance with Special Provision Section 620, Drainage Geocomposite.

PILE NOTES

1. The maximum factored pile load is 462 kips for Strength I load combination.

2. Estimate of piles required:

Abutment No. 1: 5-HP14x89 @ 21 feet
Abutment No. 2: 5-HP14x89 @ 21 feet

3. A steel plate shall be welded across each pile tip. See detail on sheet 27.

4. H-pile and end plate material shall be ASTM A572/A572M, Grade 50.

5. Piles shall not be out of position shown by more than 2 inches in any direction.

6. Pile webs shall be placed perpendicular to the Minor Chord.

7. Contractor is responsible for removing portions of the existing abutments necessary to construct the rock socketed pile foundation. Cost is incidental to related Contract Items.

8. Piles shall be installed in accordance with Special Provision Section 501, Rock-Socketed H-Pile Foundation.

9. Fill bottoms of rock socket with 2'-0" thick Class A Concrete. Remaining rock socket length shall be backfilled with Underdrain Backfill Material Type 'C'. Payment for all labor and materials will be considered incidental to the related Contract Items.

STATE OF MAINE
DEPARTMENT OF TRANSPORTATION

STP-2047(600)

WIN 20476.00

BRIDGE NO. 2807

BRIDGE PLANS

Hoyle, Tanner & Associates, Inc.
www.hoyletanner.com

PROJ. MANAGER	M. PARLIN	BY	DATE
DESIGN-DETAILED	RSW	PBD	APR 2016
CHECKED-REVIEWED	JCR	AML	APR 2016
DESIGN2-DETAILED2	BKM	BKM	APR 2016
DESIGN3-DETAILED3			
REVISIONS 1			
REVISIONS 2			
REVISIONS 3			
REVISIONS 4			
FIELD CHANGES			

STIMSON BRIDGE
LITTLE OSSIPEE RIVER
WATERBORO-LIMERICK YORK COUNTY

ABUTMENT NO. 1
PLAN AND ELEVATION

SHEET NUMBER
23
OF 41

Filename: ...\BRIDGE\MSTA\023_Abut1_plan.dgn Division: BRIDGE Username: common Date:4/19/2016

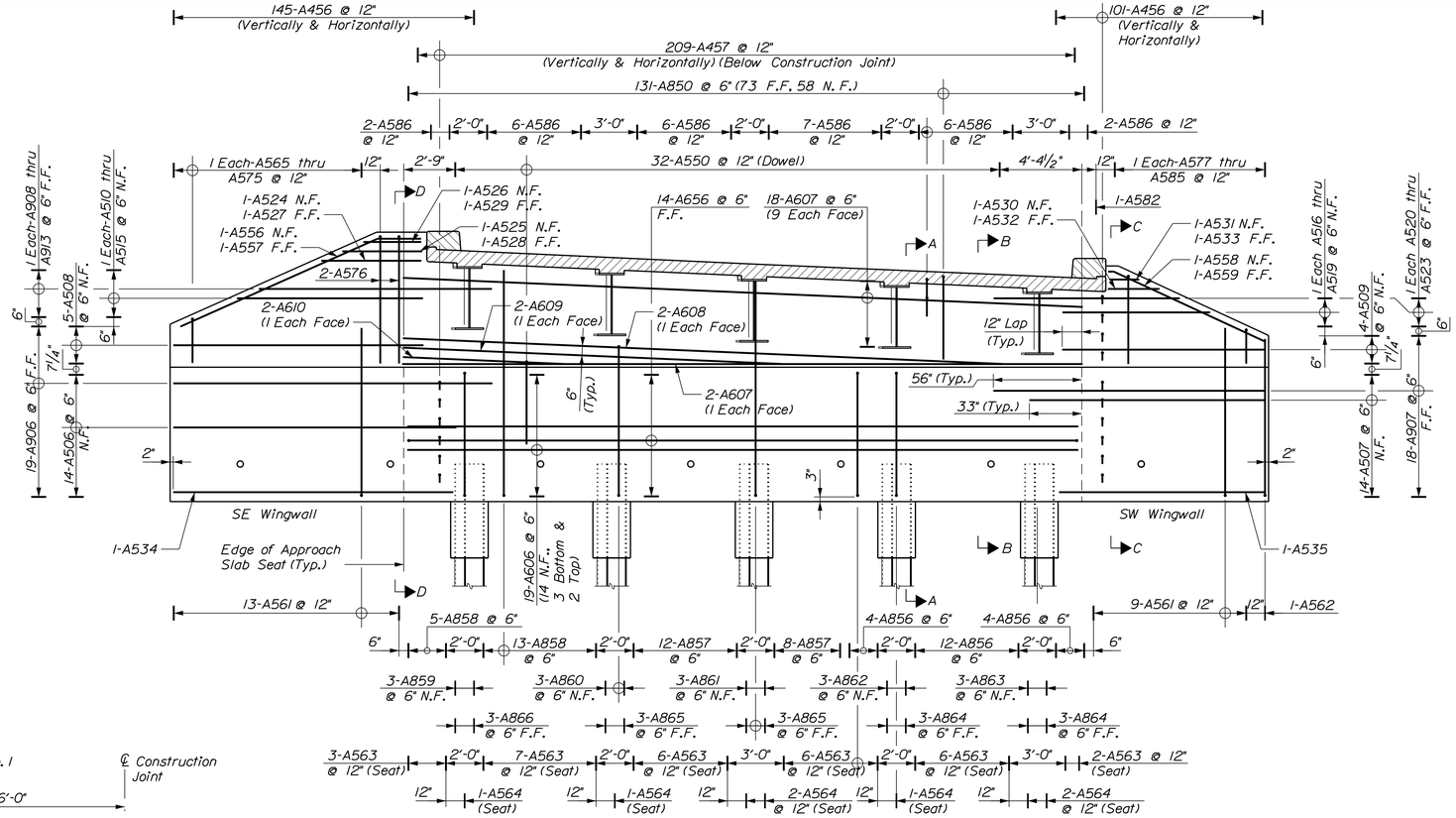

ELEVATION

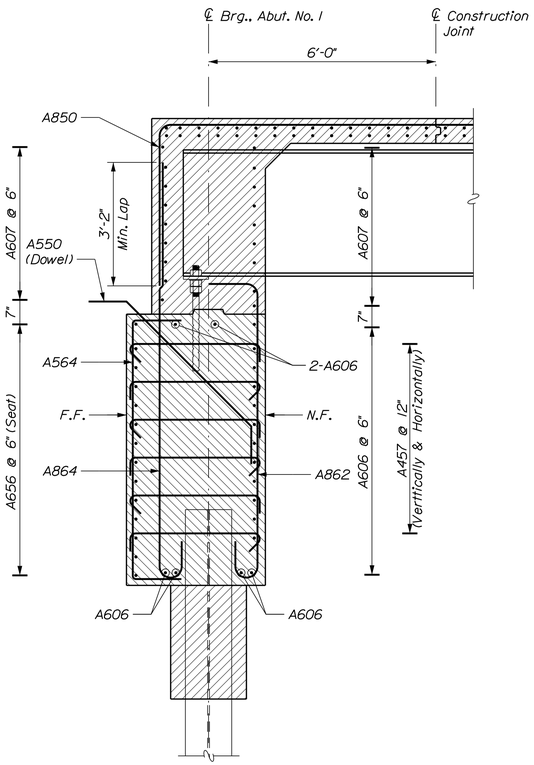

SECTION A-A
(At Piles and Girders)

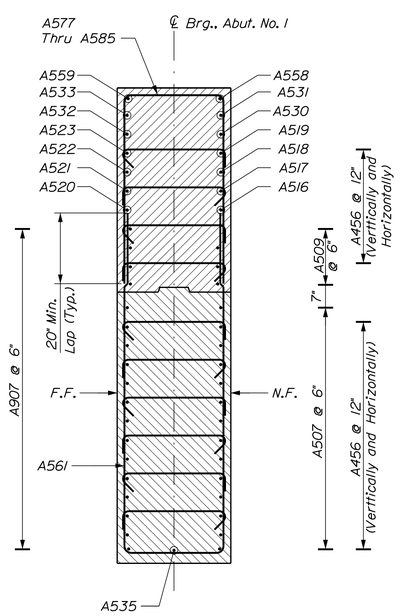

SECTION C-C
(SW Wingwall)

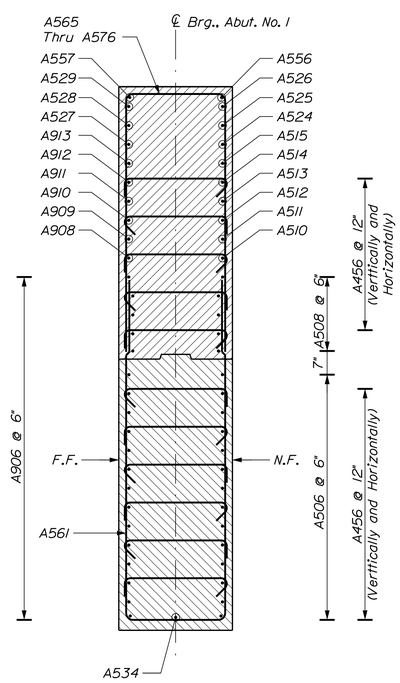

SECTION D-D
(SE Wingwall)

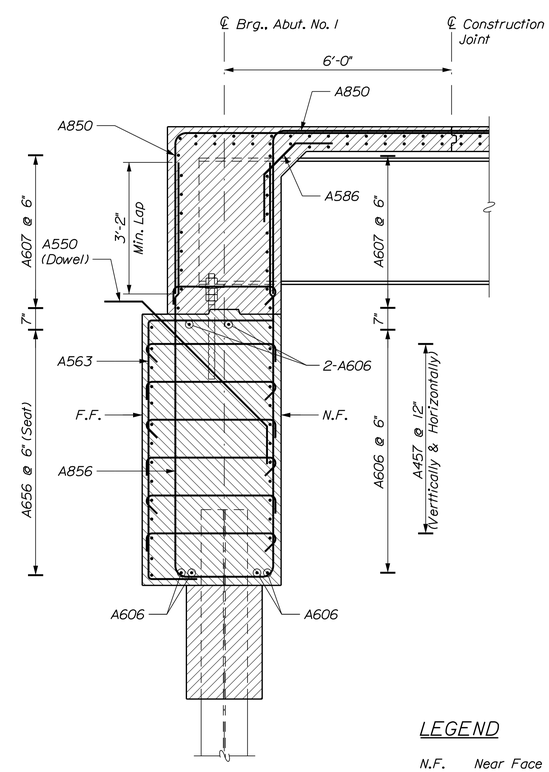

SECTION B-B
(Between Piles and Girders)

LEGEND

N.F. Near Face
F.F. Far Face

STATE OF MAINE
DEPARTMENT OF TRANSPORTATION

STP-2047(600)

WIN 20476.00

BRIDGE NO. 2807

BRIDGE PLANS

Hoyle, Tanner & Associates, Inc.
www.hoyletanner.com

PROJ. MANAGER	M. P-ARLIN	BY	DATE
DESIGN-DETAILED	RSW	PBD	APR 2016
CHECKED-REVIEWED	JCR	AML	APR 2016
DESIGN2-DETAILED2	BKM	BKM	APR 2016
DESIGN3-DETAILED3			
REVISIONS 1			
REVISIONS 2			
REVISIONS 3			
REVISIONS 4			
FIELD CHANGES			

STIMSON BRIDGE
LITTLE OSSIPEE RIVER
WATERBORO-LIMERICK YORK COUNTY

ABUTMENT NO. 1
REINFORCEMENT

SHEET NUMBER
24
OF 41

Filename: ...\MSTA\024_Abut1_rebar.dgn Division: BRIDGE Username: common Date:4/19/2016

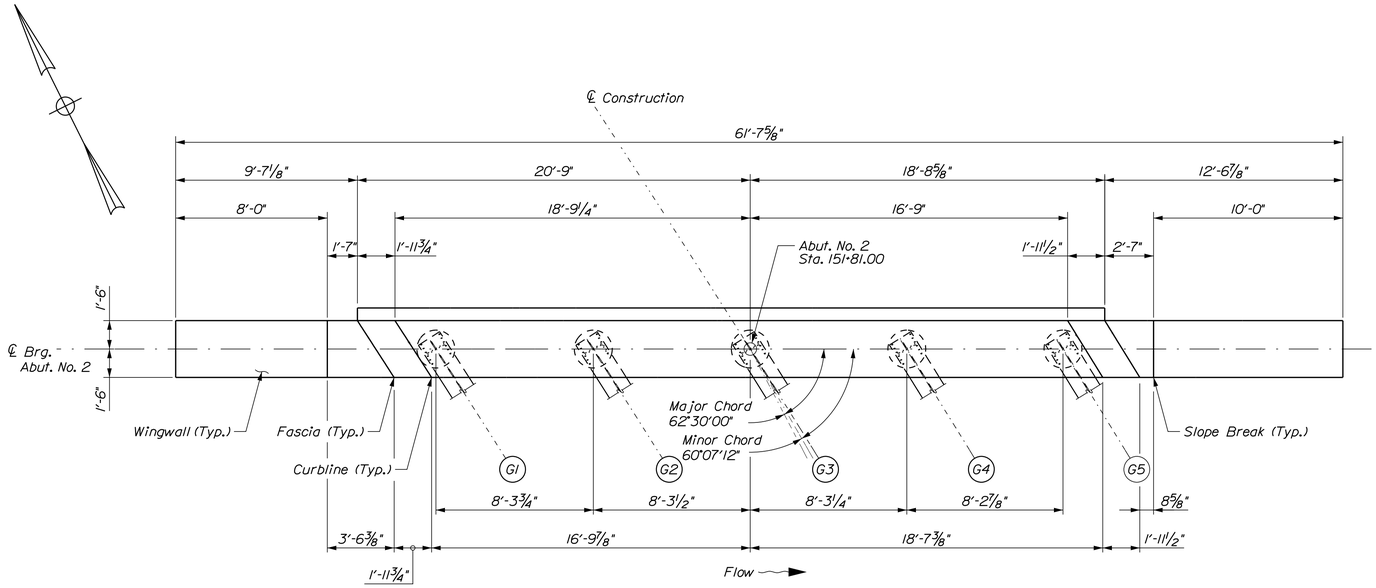

PLAN

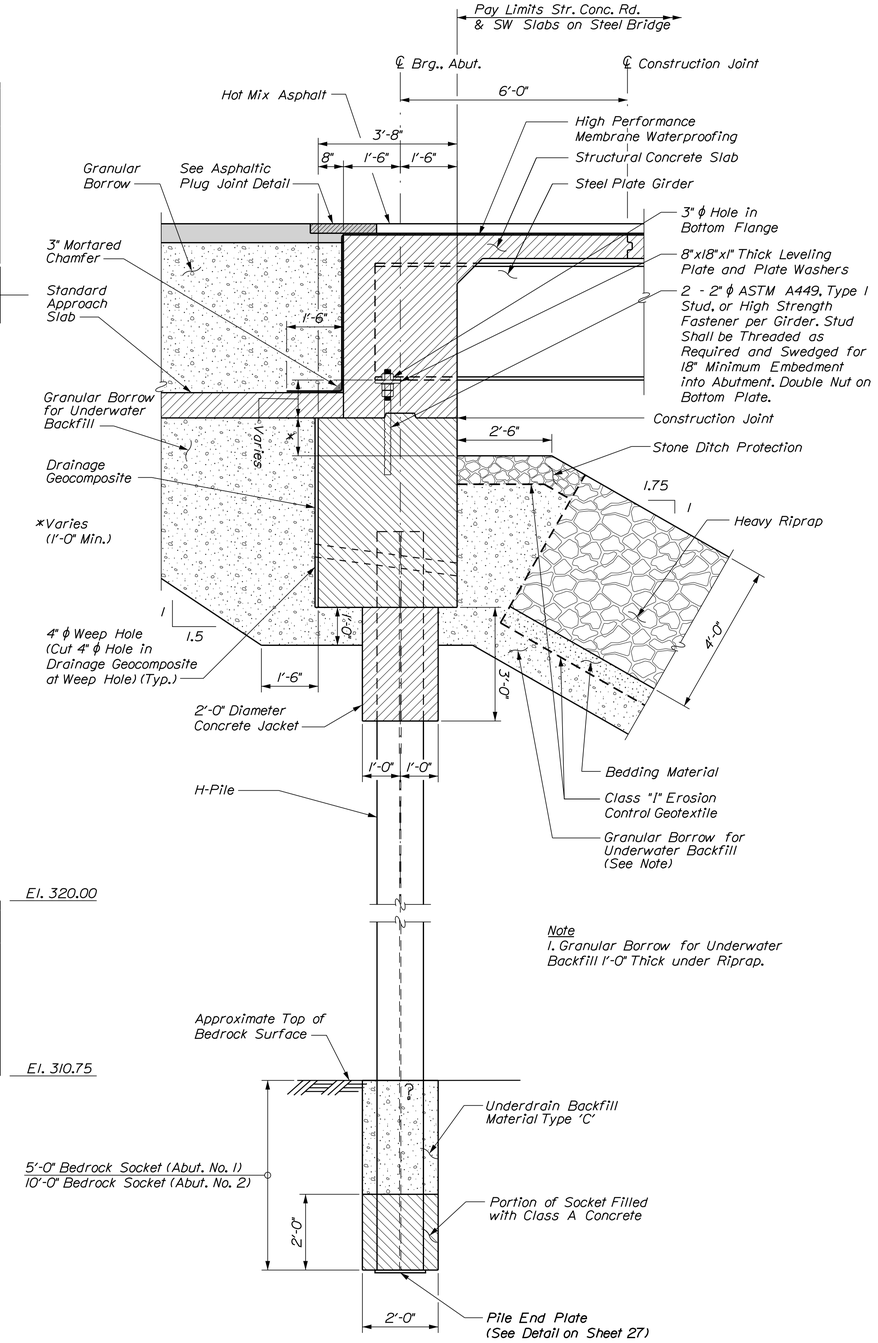

Note
1. Granular Borrow for Underwater Backfill 1'-0" Thick under Riprap.

TYPICAL SECTION AT
ABUTMENT NO. 1 AND NO. 2

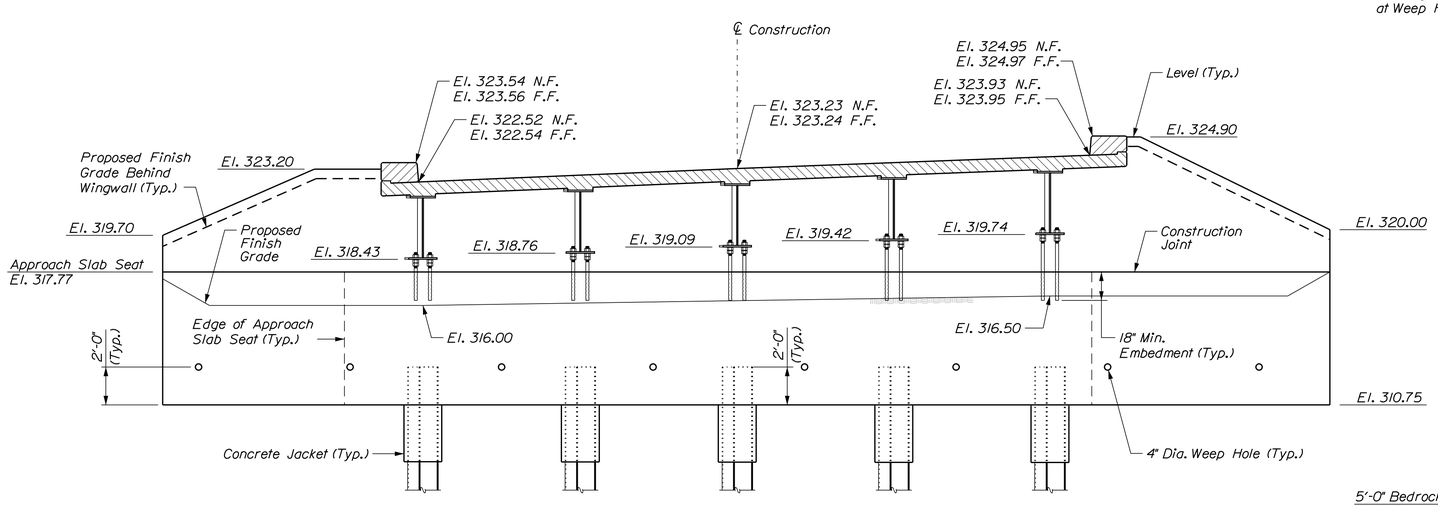

ELEVATION

Note
1. Wearing Surface and End Diaphragms Omitted for Clarity.

STATE OF MAINE
DEPARTMENT OF TRANSPORTATION

STP-2047(600)

WIN 20476.00

BRIDGE NO. 2807

BRIDGE PLANS

Hoyle, Tanner & Associates, Inc.
www.hoyletanner.com

PROJ. MANAGER	M. PARLIN	BY	DATE
DESIGN-DETAILED	RSW	PBD	APR 2016
CHECKED-REVIEWED	JCR	AML	APR 2016
DESIGN2-DETAILED2	BKM	BKM	APR 2016
DESIGN3-DETAILED3			-----
REVISIONS 1	-----	-----	-----
REVISIONS 2	-----	-----	-----
REVISIONS 3	-----	-----	-----
REVISIONS 4	-----	-----	-----
FIELD CHANGES	-----	-----	-----

STIMSON BRIDGE
LITTLE OSSIPEE RIVER
WATERBORO-LIMERICK YORK COUNTY

ABUTMENT NO. 2
PLAN AND ELEVATION

SHEET NUMBER
25
OF 41

Filename: ...\BRIDGE\MSTA\025_Abut2_plan.dgn Division: BRIDGE Username: common Date:4/19/2016

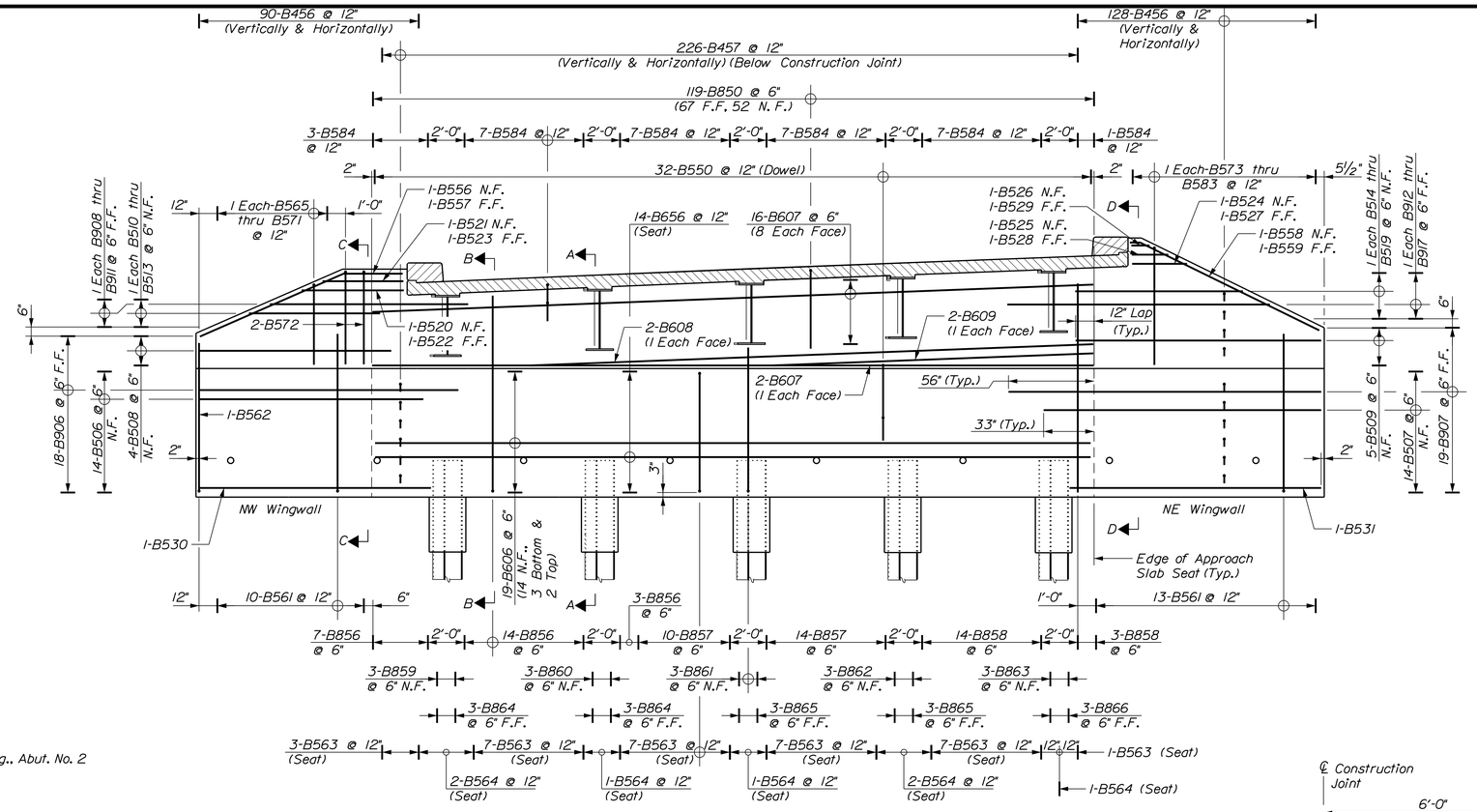

ELEVATION

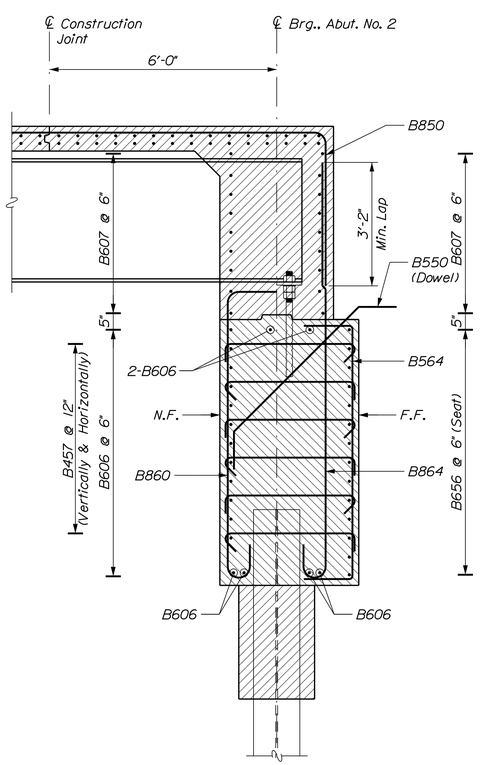

SECTION A-A
(At Piles and Girders)

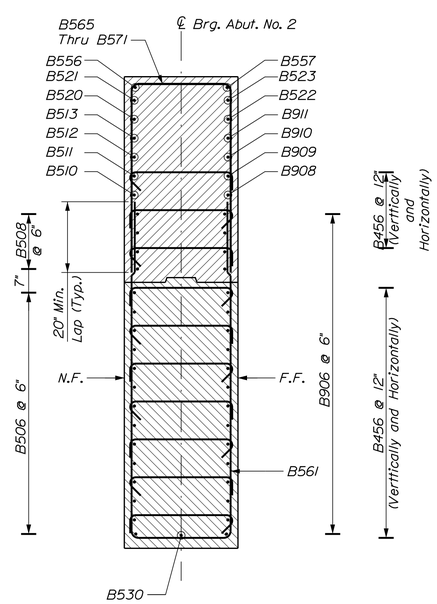

SECTION C-C
(NW Wingwall)

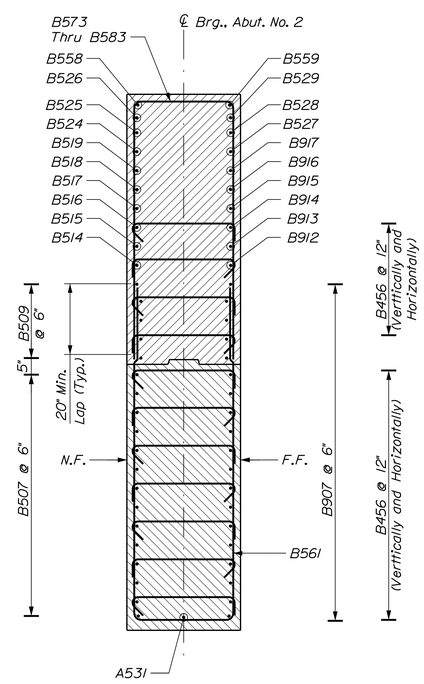

SECTION D-D
(NE Wingwall)

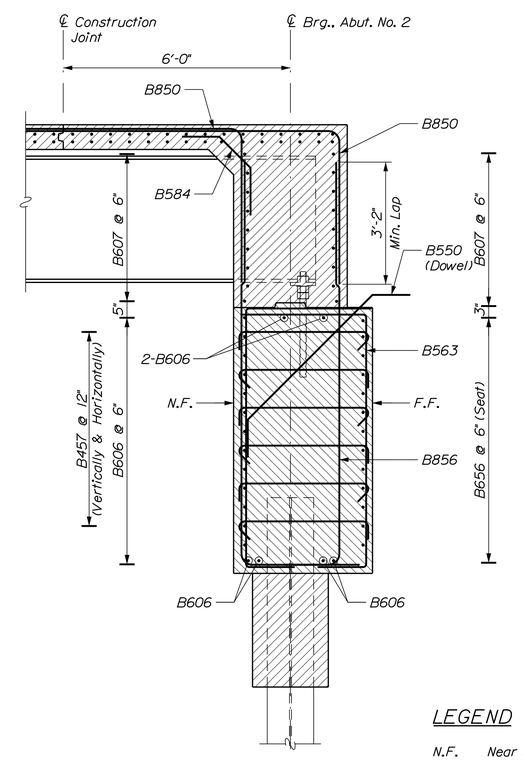

SECTION B-B
(Between Piles)

LEGEND

N.F. Near Face

F.F. Far Face

STATE OF MAINE
DEPARTMENT OF TRANSPORTATION

STP-2047(600)

WIN 20476.00

BRIDGE NO. 2807

BRIDGE PLANS

Hoyle, Tanner & Associates, Inc.
www.hoyletanner.com

PROJ. MANAGER	M. P-ARLIN	BY	DATE
DESIGN-DETAILED	RSW	PBD	APR 2016
CHECKED-REVIEWED	JCR	AML	APR 2016
DESIGN2-DETAILED2	BKM	BKM	APR 2016
DESIGN3-DETAILED3			
REVISIONS 1			
REVISIONS 2			
REVISIONS 3			
REVISIONS 4			
FIELD CHANGES			

STIMSON BRIDGE
LITTLE OSSIPEE RIVER
WATERBORO-LIMERICK YORK COUNTY

ABUTMENT NO. 2
REINFORCEMENT

SHEET NUMBER
26
OF 41

Filename: ...\MSTA\026_Abut2_rebar.dgn Division: BRIDGE Username: common Date:4/19/2016

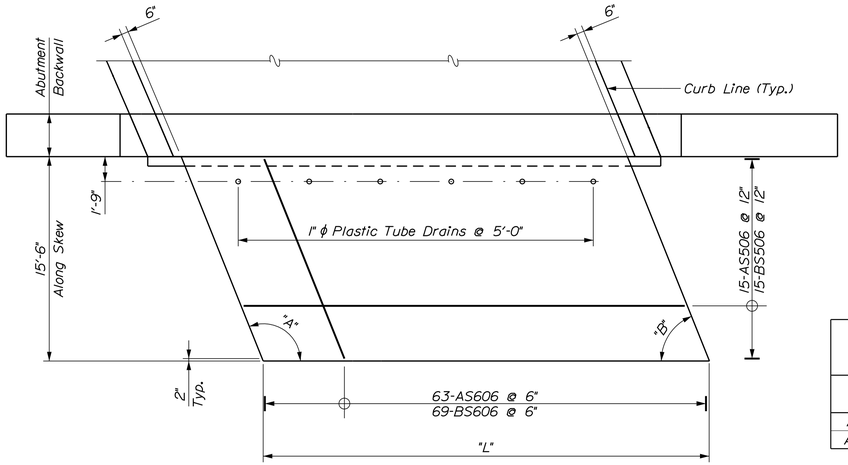

PLAN

TABLE OF APPROACH SLAB LENGTH AND SKEW ANGLE			
Location	"A"	"B"	"L"
Abut. No. 1	111°52'38"	68°7'22"	31'-5"
Abut. No. 2	122°16'54"	57°43'6"	34'-4"

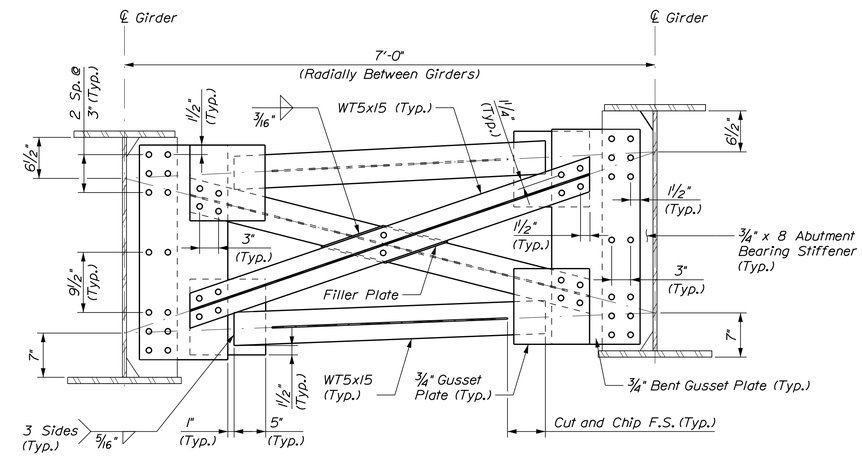

CROSS FRAME AT ABUTMENT NO. 1 AND ABUTMENT NO. 2

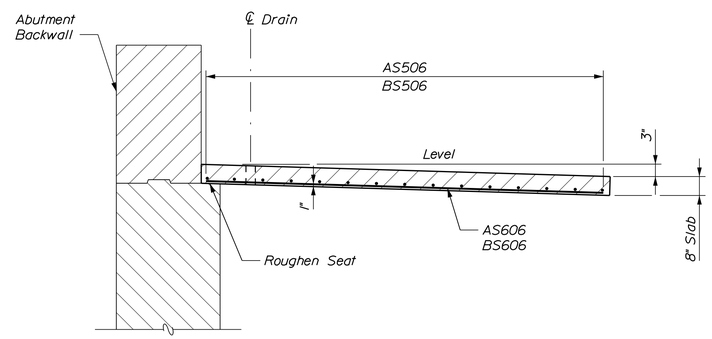

SECTION

CONCRETE APPROACH SLAB

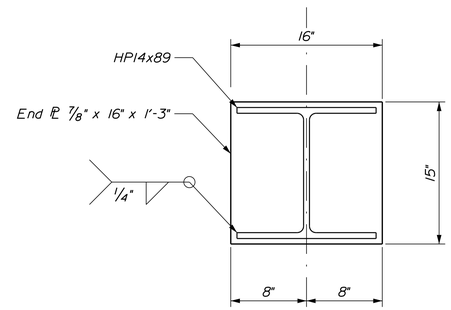

PILE END PLATE DETAIL

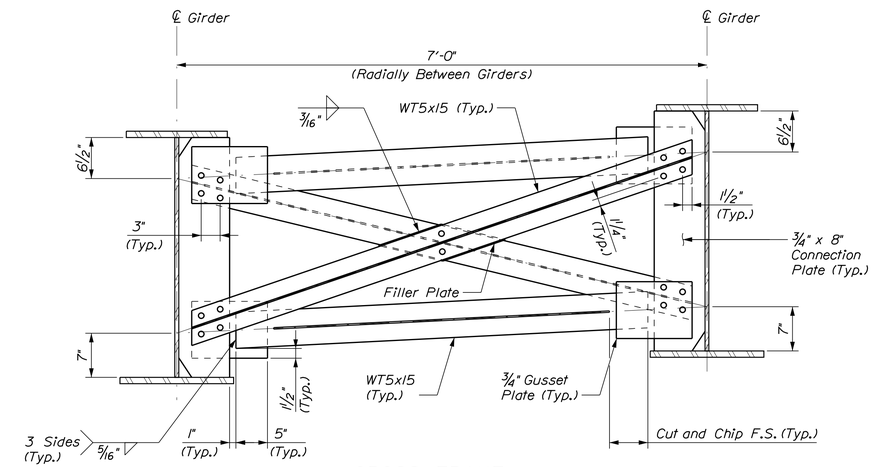

CROSS FRAME

(Intermediate Shown, Pier Similar)

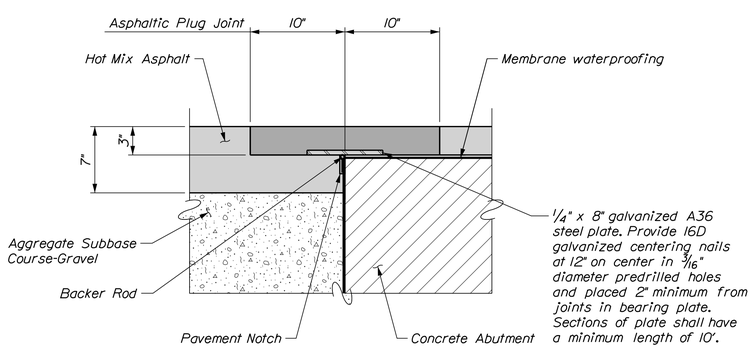

ASPHALTIC PLUG JOINT DETAIL

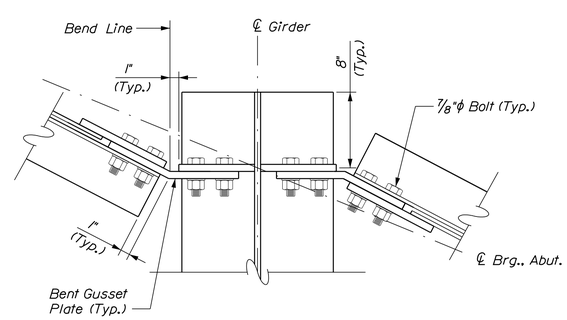

BENT GUSSET PLATE DETAIL

CROSS FRAME NOTES - DIAPHRAGM SUBSTITUTION

1. The Contractor, at their option, may substitute a W27x84 diaphragm for the cross frame assembly detailed herein.

2. Diaphragms, if used, shall conform to the geometry of a Type B diaphragm per Standard Detail 504(01), except that the web ends shall be cut perpendicular to the girder flanges.

3. Cross frame bent gusset plates for use with optional diaphragms shall be as detailed herein.

4. The number and layout of diaphragms, if used, shall be the same as the proposed cross frame layout.

5. Partial substitution of diaphragms for cross frames is not allowed.

6. The Department shall have final approval of the proposed diaphragm substitution during the shop drawing review process.

7. No additional payment will be made for the use of diaphragms as a substitution for cross frames.

STATE OF MAINE
DEPARTMENT OF TRANSPORTATION

STP-2047(600)

WIN 20476.00

BRIDGE NO. 2807

BRIDGE PLANS

Hoyle, Tanner & Associates, Inc.
www.hoyletanner.com

PROJ. MANAGER	M. PARLIN
DESIGN-DETAILED	RSW
CHECKED-REVIEWED	JCR
DESIGN2-DETAILED2	BKM
DESIGN3-DETAILED3	
REVISIONS: 1	
REVISIONS: 2	
REVISIONS: 3	
REVISIONS: 4	
FIELD CHANGES	

BY	DATE
PBD	APR 2016
AML	APR 2016
BKM	APR 2016

STIMSON BRIDGE
LITTLE OSSIPEE RIVER
WATERBORO-LIMERICK YORK COUNTY

MISCELLANEOUS DETAILS

SHEET NUMBER
27
OF 41

Filename: ...\MSTA\027_Abutments_01.dgn Division: BRIDGE Username: common Date:4/20/2016

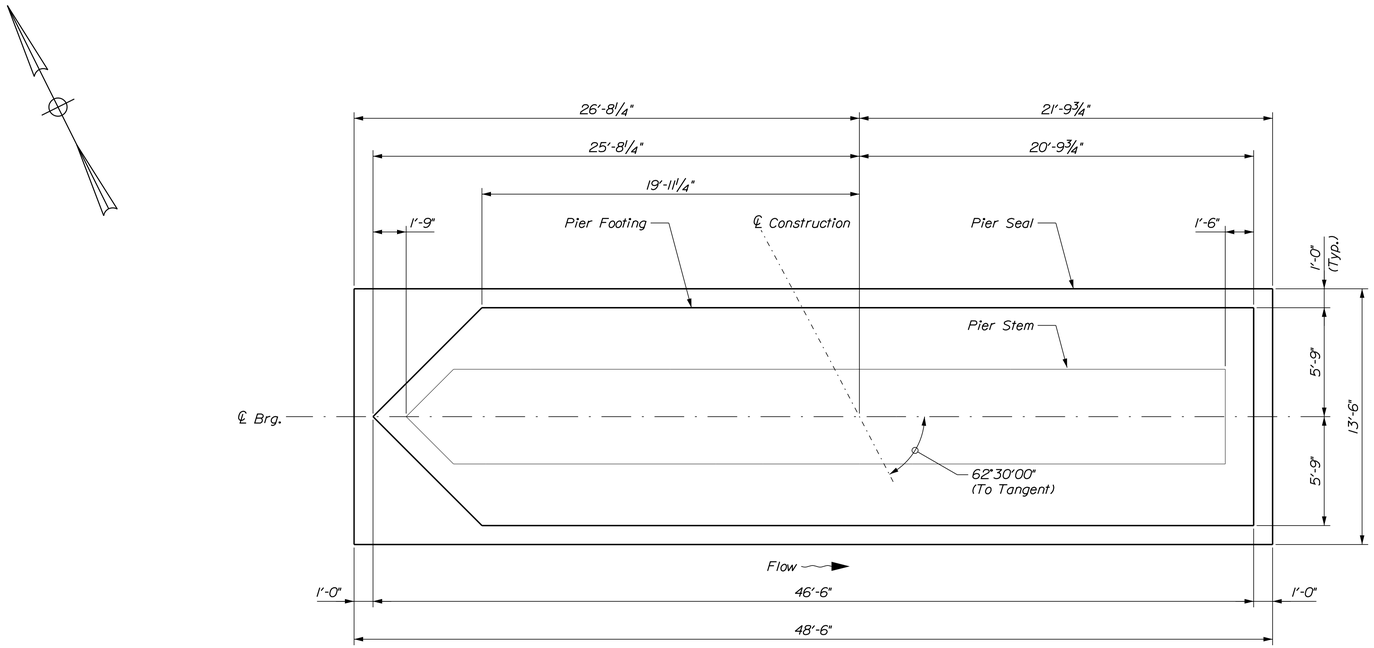

PIER SEAL AND FOOTING PLAN

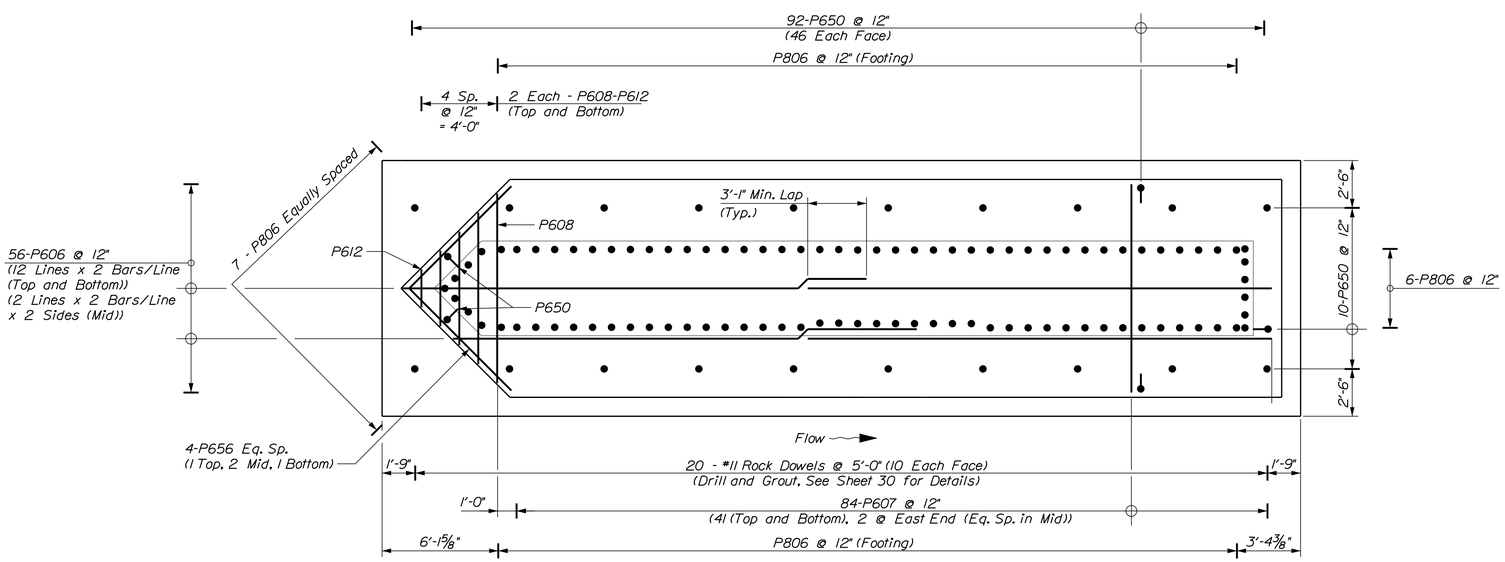

PIER FOOTING REINFORCEMENT PLAN

PIER DESIGN CRITERIA

1. Critical AASHTO Load Combination - Maine Modified Strength I with Ice.

2. Buoyancy: Water level assumed at elevation 307.31 at Q1.1 and elevation 312.97 at Q50.

3. Stream flow: Maximum Velocity of 7.0 fps at Q1.1 and 11.02 fps at Q50 skewed at 10° to longitudinal centerline of pier.

4. Wind: 100 mph.

5. Ice: Thickness 1.5 feet, pressure 28.8 ksf at elevation 307.31 for Q1.1, or pressure 14.4 ksf at elevation 312.97 for Q50 (strength limit states). Thickness 2.5 feet, pressure 28.8 ksf at elevation 307.31 for Q1.1 or pressure 14.4 ksf at elevation 312.97 for Q50 (extreme limit states). 30% of nose force applied transverse to pier (strength and extreme limit states).

PIER NOTES

1. Reinforcing steel shall have 3 inches minimum cover unless otherwise noted.

2. The maximum factored applied footing pressure is 6.0 ksf.

3. The maximum factored applied seal pressure is 6.6 ksf.

PIER SEAL COFFERDAM NOTES

1. The seal concrete placement dimensions represent the minimum seal size necessary to meet design requirements and are not based on the use of any particular sheet pile section.

2. The horizontal pay limit for seal concrete shall be to the dimensions shown on the plans. No additional payment will be made for concrete placed outside of these limits.

3. When sheet piling is used for seal cofferdams, appropriate rolled corners shall be used, and the inside face of the sheet piling shall be at or outside of the seal concrete dimensions shown.

4. The depth of the seal is set for a water elevation of 310.6. If the water elevation at the time of construction is higher, the depth of the seal shall be adjusted.

5. The concrete seal shall be placed on bedrock cleaned of all loose, weathered or fractured rock and loose soil. Where the bedrock surface slope exceeds 4H:1V, the bedrock surface shall be benched in level steps or made less steep than 4H:1V.

6. The bedrock may vary in nature, slope and degree of fracturing. Actual rock elevations may vary. After the foundation excavation is complete and all unsound bedrock is removed, the Contractor shall obtain foundation bedrock elevations in accordance with the Contractor's written procedure per Section 511 of the Standard Specifications.

PIER ROCK DOWEL NOTES

1. The connection between the concrete seal and the bearing surface, as well as the concrete seal and the pier footing shall be doweled.

2. The method of installing dowels shall be approved by the Resident.

3. Holes drilled for #11 Dowel reinforcing steel shall be a minimum diameter of 3 1/2 inches.

4. The Geotechnical Engineer and Resident shall be provided the opportunity to review and approve the prepared bedrock surface. Evaluation of the excavated rock bearing surface is necessary at the pier to consider the stability of the supporting rock mass.

STATE OF MAINE
DEPARTMENT OF TRANSPORTATION

STP-2047(600)

WIN 20476.00

BRIDGE NO. 2807

BRIDGE PLANS

Hoyle, Tanner & Associates, Inc.
www.hoyletanner.com

PROJ. MANAGER	M. PARLIN	BY	DATE
DESIGN-DETAILED	RSW	PBD	APR 2016
CHECKED-REVIEWED	JCR	AML	APR 2016
DESIGN2-DETAILED2	BKM	BKM	APR 2016
DESIGN3-DETAILED3			
REVISIONS 1			
REVISIONS 2			
REVISIONS 3			
REVISIONS 4			
FIELD CHANGES			

STIMSON BRIDGE
LITTLE OSSIPEE RIVER
WATERBORO-LIMERICK YORK COUNTY

PIER
SEAL AND FOOTING

SHEET NUMBER
28
OF 41

Filename: ...\00\BRIDGE\MSTA\028_Pier_01.dgn Division: BRIDGE Username: common Date:4/19/2016

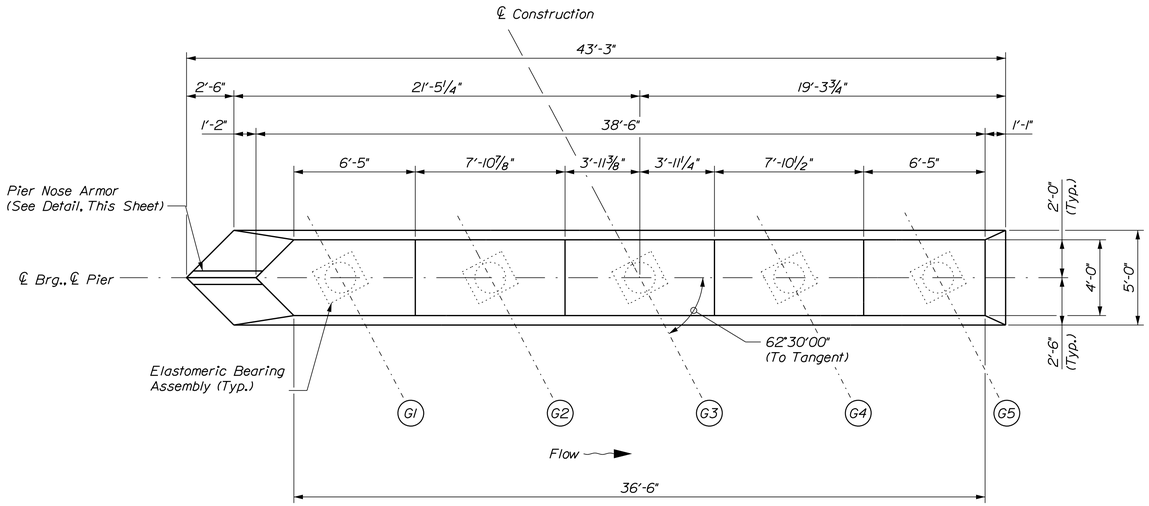

PIER STEM PLAN

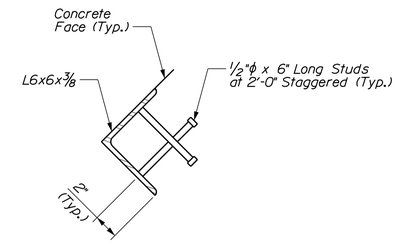

PIER NOSE ARMOR DETAIL

PIER NOSE ARMOR NOTES

1. Payment for furnishing and placing the concrete anchors and pier nose shall be incidental to the unit price bid for the concrete pier.

2. Pier nose protection shall be extended from top of footing to El. 317.26.

3. Nose armor, including anchor studs, shall be cleaned and galvanized in accordance with Section 506 of the Standard Specifications and included in Pay Item 502.239 - Structural Concrete Piers.

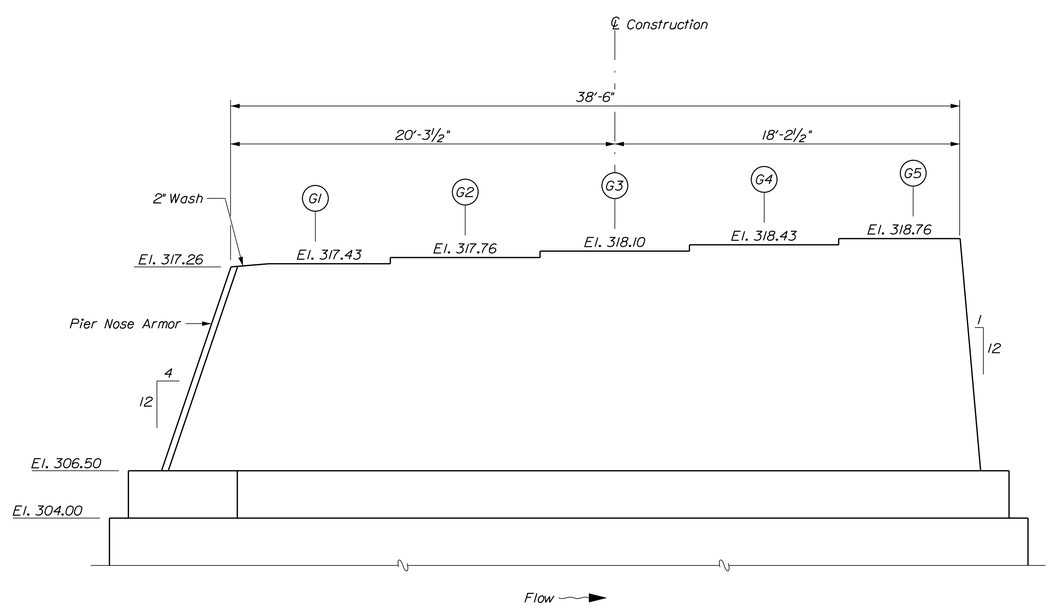

ELEVATION

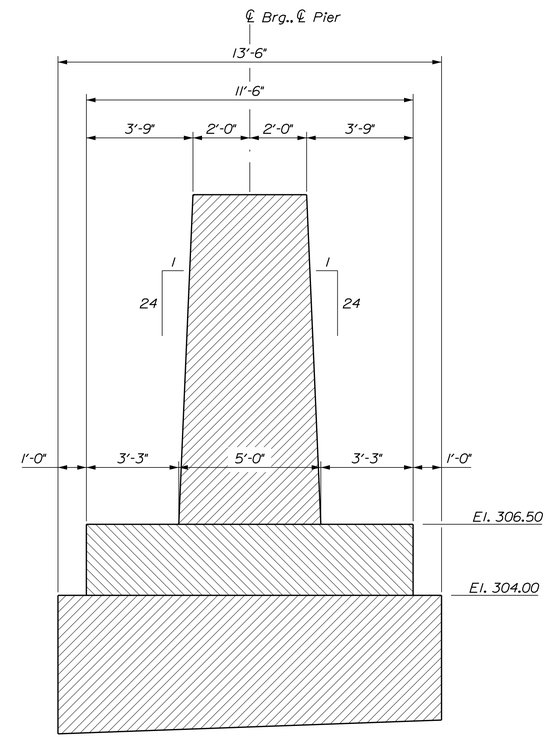

TYPICAL SECTION

STATE OF MAINE
DEPARTMENT OF TRANSPORTATION

STP-2047(600)

WIN 20476.00

BRIDGE NO. 2807

BRIDGE PLANS

Hoyle, Tanner & Associates, Inc.
www.hoyletanner.com

PROJ. MANAGER	M. PARLIN	BY	DATE
DESIGN-DETAILED	RSW	PBD	APR 2016
CHECKED-REVIEWED	JCR	AML	APR 2016
DESIGN2-DETAILED2	BKM	BKM	APR 2016
DESIGN3-DETAILED3			
REVISIONS 1			
REVISIONS 2			
REVISIONS 3			
REVISIONS 4			
FIELD CHANGES			

STIMSON BRIDGE
LITTLE OSSIPEE RIVER
WATERBORO-LIMERICK YORK COUNTY

PIER PLAN

SHEET NUMBER
29
OF 41

Filename: ...\00\BRIDGE\MSTA\029_Pier_02.dgn Division: BRIDGE Username: common Date:4/19/2016

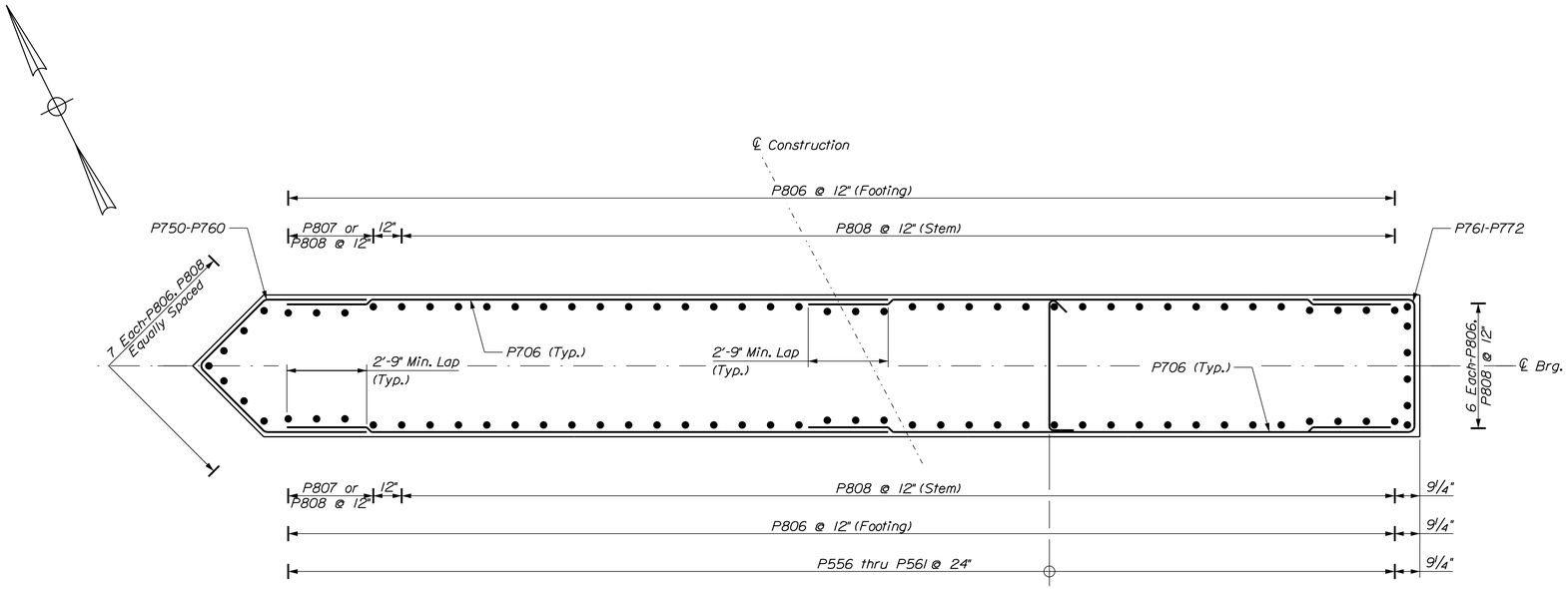

PIER STEM LONGITUDINAL SECTION

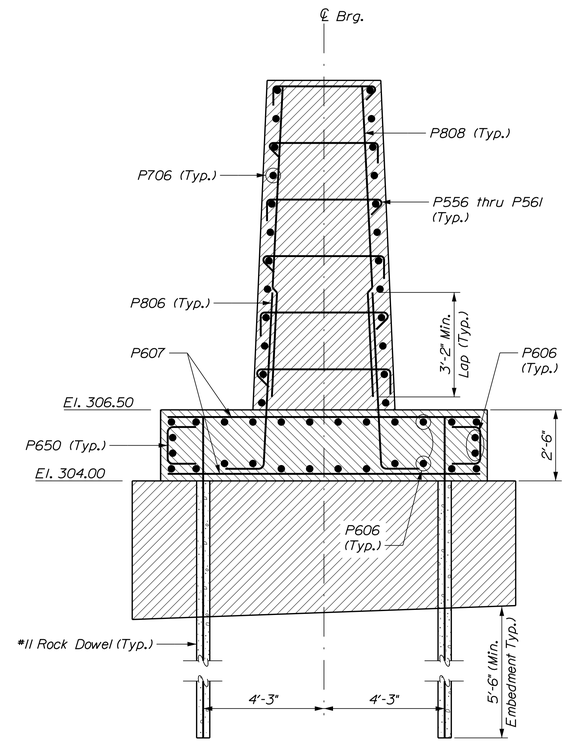

TYPICAL PIER STEM TRANSVERSE SECTION

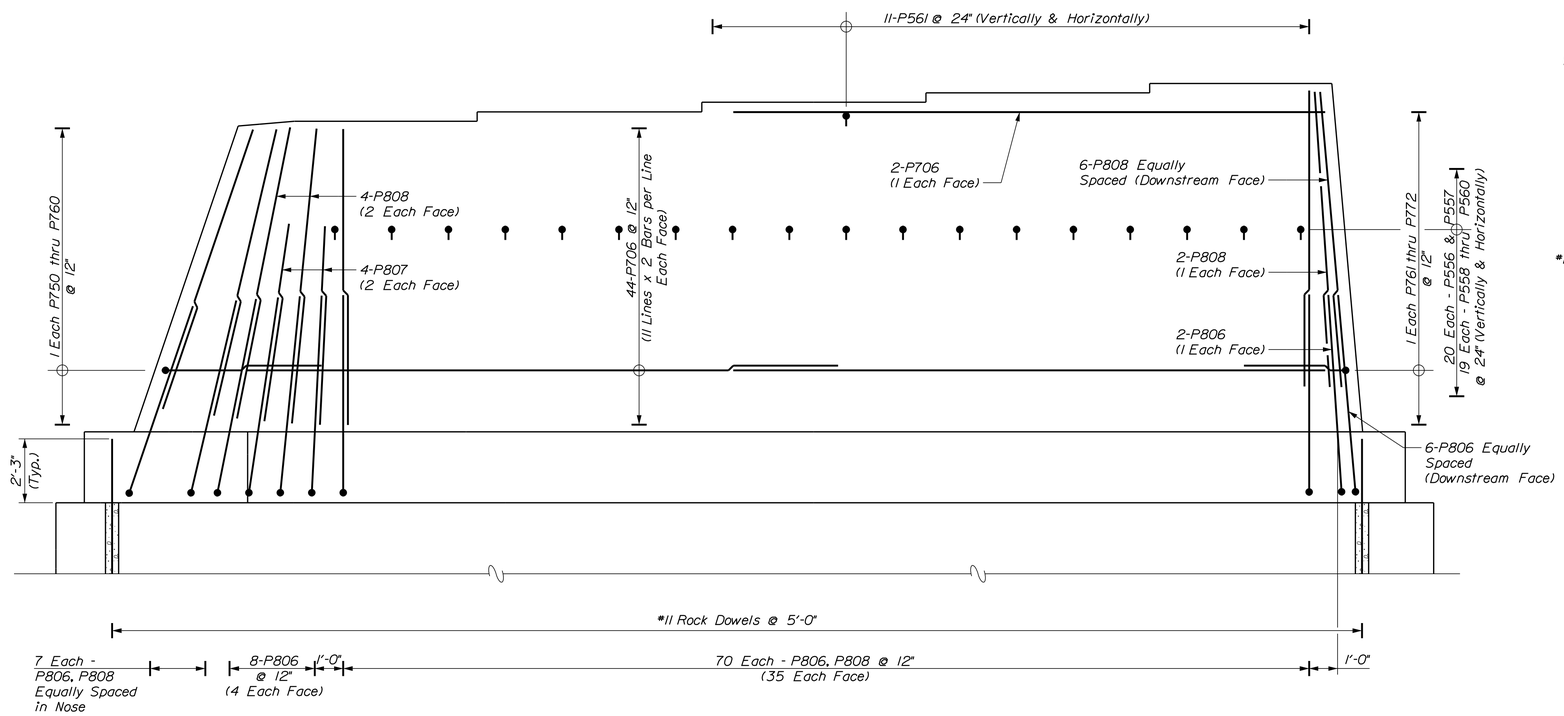

PIER STEM ELEVATION

STATE OF MAINE
DEPARTMENT OF TRANSPORTATION

STP-2047(600)

WIN 20476.00

BRIDGE NO. 2807

BRIDGE PLANS

Hoyle, Tanner & Associates, Inc.
www.hoyletanner.com

PROJ. MANAGER	M. PARLIN	BY	DATE
DESIGN-DETAILED	RSW	PBD	APR 2016
CHECKED-REVIEWED	JCR	AML	APR 2016
DESIGN2-DETAILED2	BKM	BKM	APR 2016
DESIGN3-DETAILED3			
REVISIONS 1			
REVISIONS 2			
REVISIONS 3			
REVISIONS 4			
FIELD CHANGES			

STIMSON BRIDGE
LITTLE OSSIPEE RIVER
WATERBORO-LIMERICK YORK COUNTY

PIER REINFORCEMENT

SHEET NUMBER
30
OF 41

Filename: ...\BRIDGE\MSTA\030_Pier_rebar.dgn Division: BRIDGE Username: common Date:4/19/2016

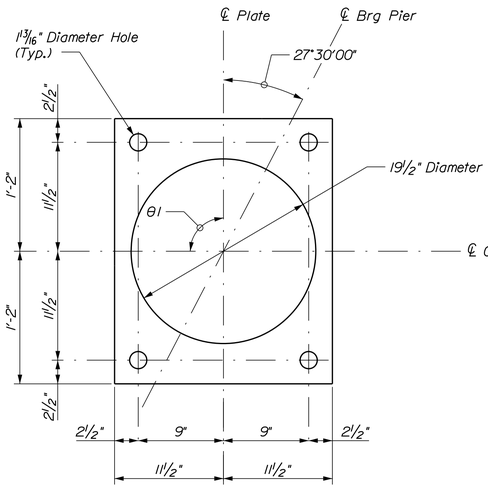

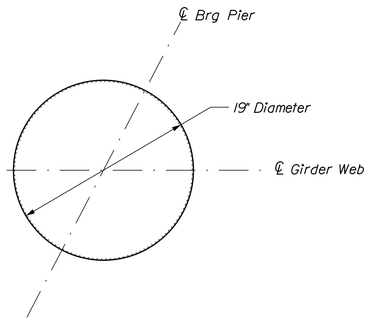

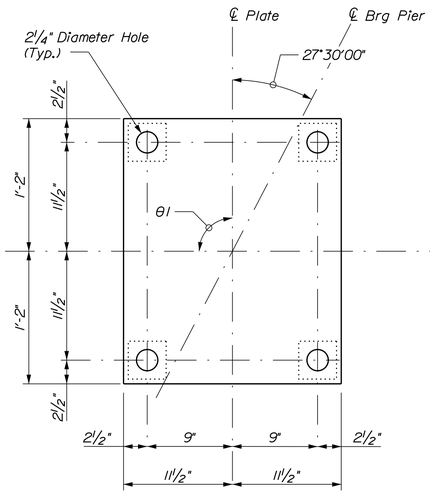

TABLE OF BEARING ANGLES	
Girder	θ1
G1	90°25'10.51"
G2	90°12'29.26"
G3	90°00'00"
G4	89°47'42.43"
G5	89°35'36.26"

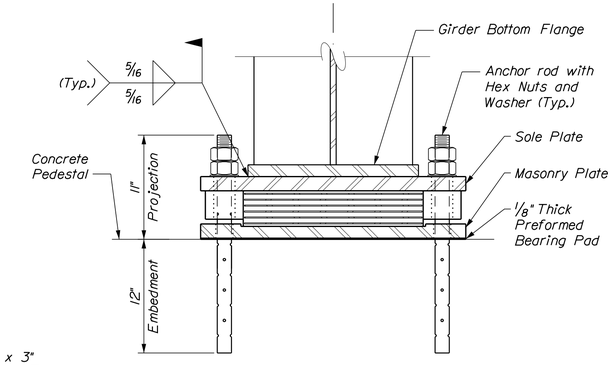

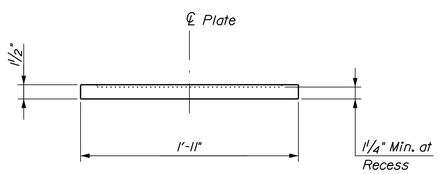

MASONRY PLATE

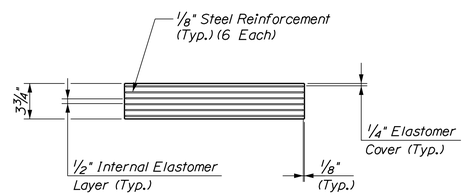

ELASTOMERIC BEARING

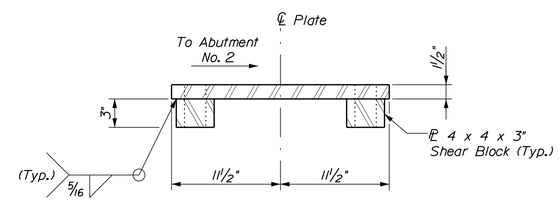

SOLE PLATE

BEARING ASSEMBLY

EXPANSION BEARING AT PIER

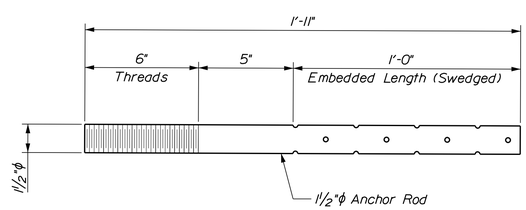

ANCHOR ROD DETAIL

ELASTOMERIC BEARING NOTES

1. The elastomer compound shall be Grade 4 or with a shear modulus of 112 psi ±15%.

2. Vulcanizing of the elastomer to the sole plates shall be done during the primary mold process.

3. Upset the threads on the anchor rods after assembly of the bearing.

4. Anchor rods shall meet the requirements or ASTM F1554, Grade 105 and swedged on the embedded portion of the rod.

5. Bearings shall be covered during transit.

6. Sole plates and shear blocks shall meet the requirements of ASTM A709/A709M, Grade 50W. Masonry plates shall meet the requirements of ASTM A709/A709M, Grade 50.

7. Sole plates and shear blocks for steel superstructures shall be treated in the same manner as the structural steel. Anchor rods, washers and nuts shall be galvanized to ASTM A153 or ASTM B695, Class 50, Type 1.

8. All bearings shall be marked prior to shipping. The marks shall include the bearing location on the bridge and a direction arrow that points upstation. All marks shall be permanent and shall be visible after the bearing is installed.

9. All necessary precautions shall be taken to protect bearing components from field weld flash and spatter. Heat from welding operations shall be controlled such that steel adjacent to the elastomer does not exceed 200 °F. The temperature shall be verified by the use of temperature indicating crayons or other suitable means.

10. The "Bearing Design Load" for each bearing, as noted in the Standard Specifications Subsection 523.23, is 303 kips. This is the total load for the Service I load combination, without impact.

STATE OF MAINE
DEPARTMENT OF TRANSPORTATION
STP-2047(600)
WIN 20476.00
BRIDGE NO. 2807
BRIDGE PLANS

Hoyle, Tanner & Associates, Inc.
www.hoyletanner.com

PROJ. MANAGER	M. PARLIN	BY	DATE
DESIGN-DETAILED	RSW	PBD	APR 2016
CHECKED-REVIEWED	JCR	AML	APR 2016
DESIGN2-DETAILED2	BKM	BKM	APR 2016
DESIGN3-DETAILED3			
REVISIONS 1			
REVISIONS 2			
REVISIONS 3			
REVISIONS 4			
FIELD CHANGES			

STIMSON BRIDGE
LITTLE OSSIPEE RIVER
WATERBORO-LIMERICK YORK COUNTY

BEARING DETAILS

SHEET NUMBER
31
OF 41

Filename: ...\MSTA\031_Bearings_01.dgn Division: BRIDGE Username: common Date:4/19/2016

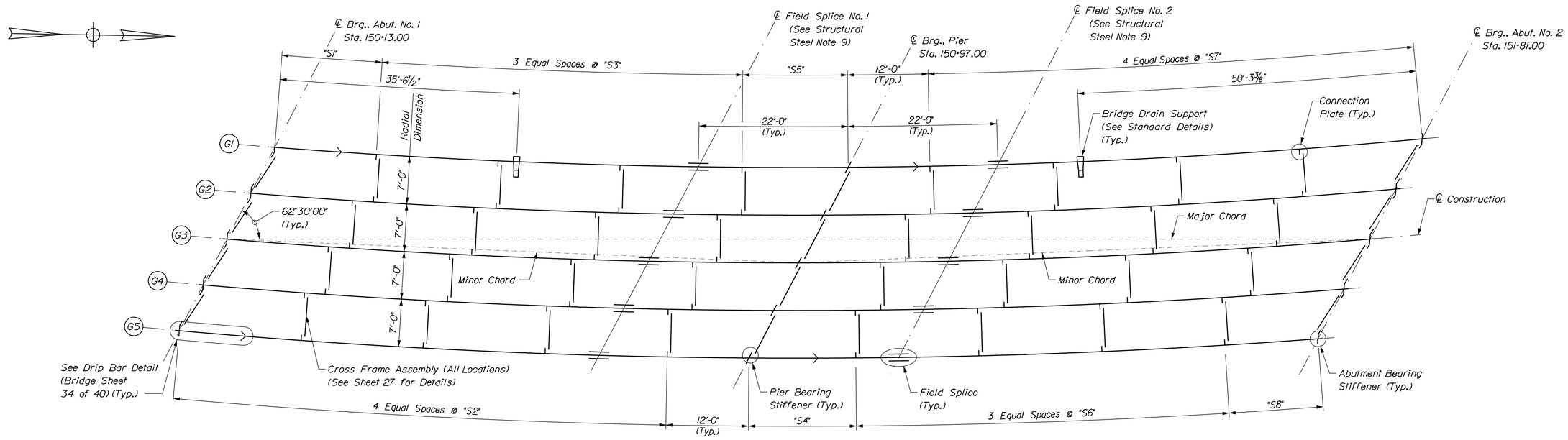

FRAMING PLAN

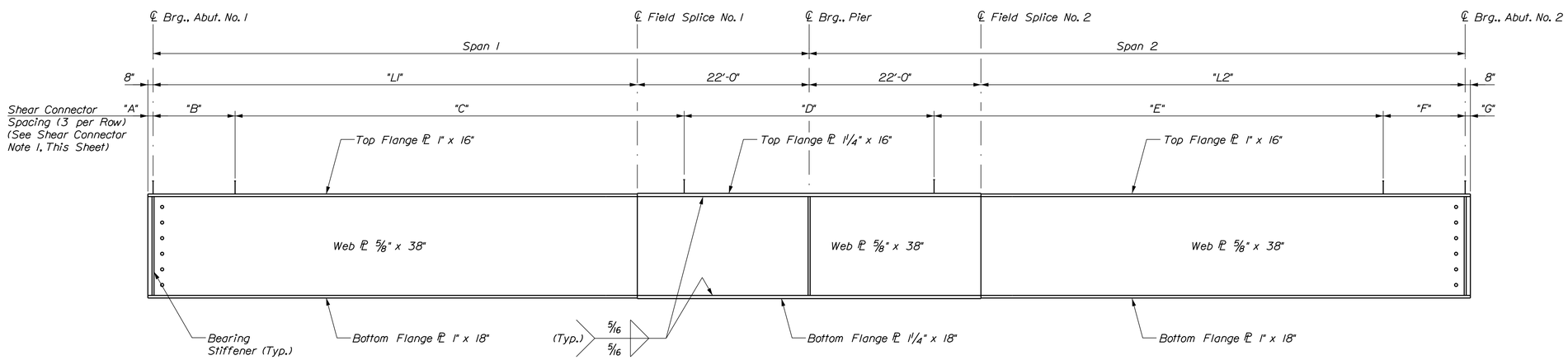

GIRDER ELEVATION

Vertical Scale Exaggerated for Clarity

TABLE OF DIMENSIONS

Girder	Span 1	Span 2	Radius	L1	L2	S1	S2	S3	S4	S5	S6	S7	S8	A	B	C	D	E	F	G
G1	84'-3 3/16"	84'-4 3/4"	997'-1 1/4"	62'-3 3/16"	62'-4 3/4"	14'-11 3/8"	-	17'-10 7/8"	-	15'-7 1/8"	-	18'-1 3/16"	-	3 1/8"	5 Sp. @ 6" = 2'-6"	98 Sp. @ 9" = 73'-6"	32 Sp. @ 6" = 16'-0"	98 Sp. @ 9" = 73'-6"	5 Sp. @ 6" = 2'-6"	4 13/16"
G2	84'-1 9/16"	84'-2 3/8"	1004'-1 1/4"	62'-1 9/16"	62'-2 3/8"	14'-11 1/4"	18'-0 3/8"	17'-10 1/2"	15'-9 1/2"	15'-6 3/4"	18'-2 11/16"	18'-0 9/16"	13'-8 3/4"	4 9/16"	6 Sp. @ 6" = 3'-0"	97 Sp. @ 9" = 72'-9"	32 Sp. @ 6" = 16'-0"	97 Sp. @ 9" = 72'-9"	6 Sp. @ 6" = 3'-0"	5 1/4"
G3	84'-0"	84'-0"	1011'-1 1/4"	62'-0"	62'-0"	14'-11 3/16"	18'-0"	17'-10 1/8"	15'-9 1/16"	15'-6 3/8"	18'-2 1/8"	18'-0"	13'-8 5/8"	3"	6 Sp. @ 6" = 3'-0"	97 Sp. @ 9" = 72'-9"	32 Sp. @ 6" = 16'-0"	97 Sp. @ 9" = 72'-9"	6 Sp. @ 6" = 3'-0"	3"
G4	83'-10 1/2"	83'-9 11/16"	1018'-1 1/4"	61'-10 1/2"	61'-9 11/16"	14'-11 1/8"	17'-11 5/8"	17'-9 3/4"	15'-8-11/16"	15'-6"	18'-1 1/2"	17'-11 7/16"	13'-8 9/16"	1 7/16"	6 Sp. @ 6" = 3'-0"	97 Sp. @ 9" = 72'-9"	32 Sp. @ 6" = 16'-0"	96 Sp. @ 9" = 72'-0"	7 Sp. @ 6" = 3'-6"	3 3/4"
G5	83'-9"	83'-7 1/2"	1025'-1 1/4"	61'-9"	61'-7 1/2"	-	17'-11 1/4"	-	15'-8-5/16"	-	18'-0 15/16"	-	13'-8 7/16"	3"	7 Sp. @ 6" = 3'-6"	96 Sp. @ 9" = 72'-0"	32 Sp. @ 6" = 16'-0"	95 Sp. @ 9" = 71'-3"	8 Sp. @ 6" = 4'-0"	4 7/16"

SHEAR CONNECTOR NOTES

1. The shear connector layout using 3 rows of connectors is included for use with a cast-in-place deck. For shear connector layout for precast deck panels, see Alternative Shear Connector Detail on sheet 34.

STATE OF MAINE
DEPARTMENT OF TRANSPORTATION

STP-2047(600)

WIN 20476.00

BRIDGE NO. 2807

BRIDGE PLANS

Hoyle, Tanner & Associates, Inc.
www.hoyletanner.com

PROJ. MANAGER	M. P-ARLIN	BY	DATE
DESIGN-DETAILED	RSW	PBD	APR 2016
CHECKED-REVIEWED	JCR	AML	APR 2016
DESIGN2-DETAILED2	BKM	BKM	APR 2016
DESIGN3-DETAILED3			------
REVISIONS 1			------
REVISIONS 2			------
REVISIONS 3			------
REVISIONS 4			------
FIELD CHANGES			------

STIMSON BRIDGE
LITTLE OSSIPEE RIVER
WATERBORO-LIMERICK YORK COUNTY

FRAMING PLAN

SHEET NUMBER
32
OF 41

Filename: ...\MSTA\032_Framing_plan.dgn Division: BRIDGE Username: common Date:4/19/2016

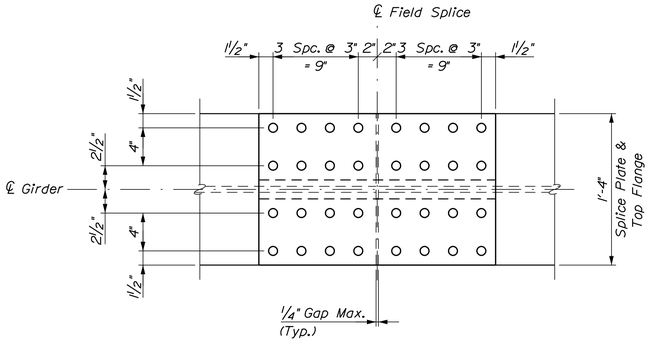

TOP VIEW

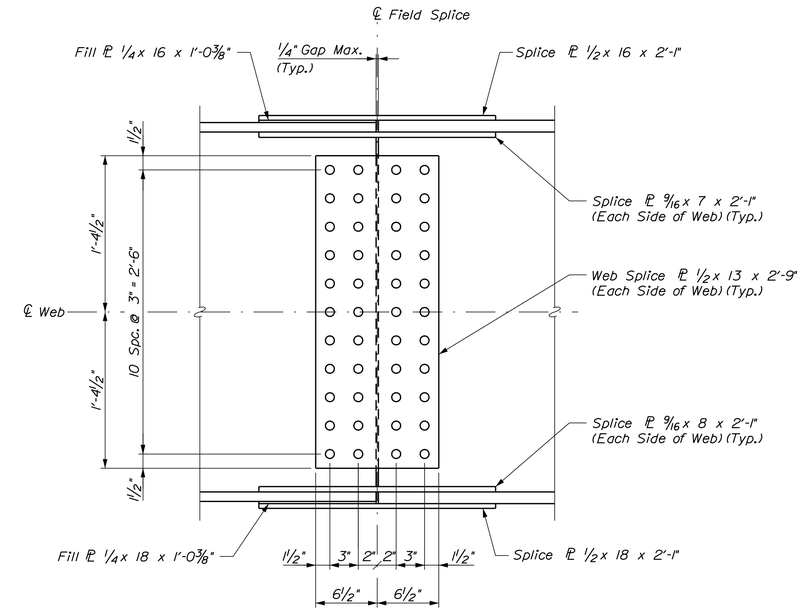

ELEVATION

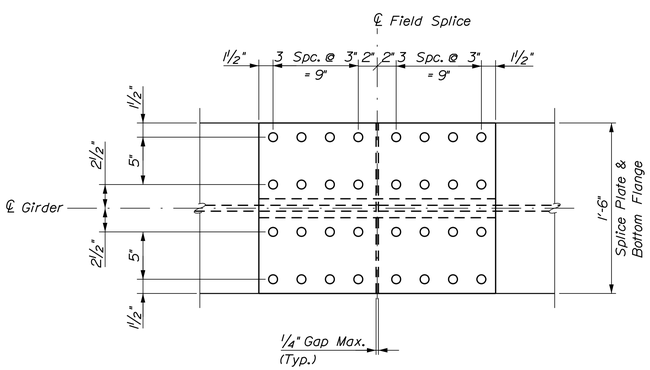

BOTTOM VIEW

BOLTED FIELD SPLICE

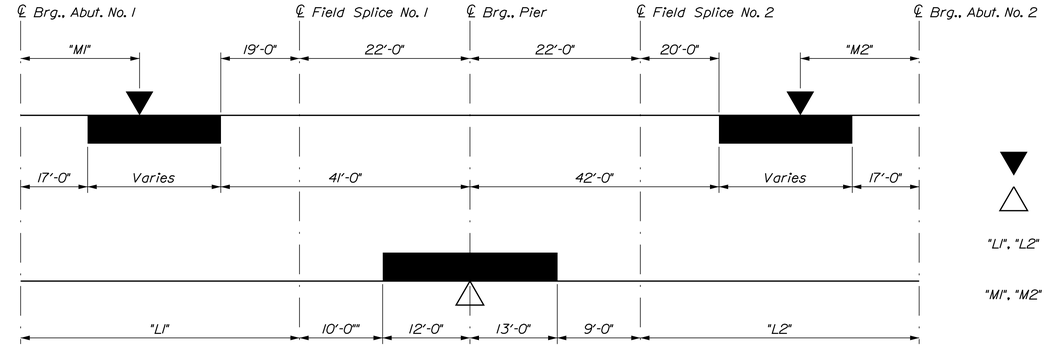

STRESS DIAGRAM - EXTERIOR GIRDERS (G1 & G5)

(Shaded areas are always in compression, others are in tension or have stress reversals)

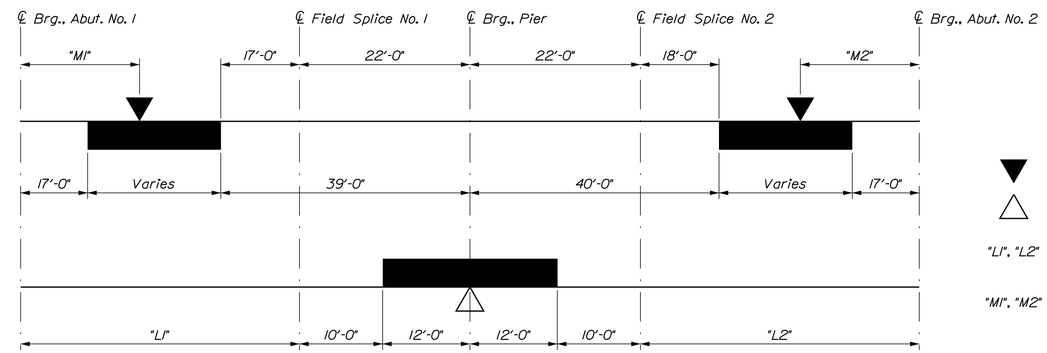

STRESS DIAGRAM - INTERIOR GIRDERS (G2 - G4)

(Shaded areas are always in compression, others are in tension or have stress reversals)

MAXIMUM POSITIVE MOMENT LOCATIONS (FT)		
Girder	"M1"	"M2"
G1	34'-0"	37'-0"
G2	33'-0"	32'-0"
G3	32'-0"	32'-0"
G4	36'-0"	32'-0"
G5	35'-0"	32'-0"

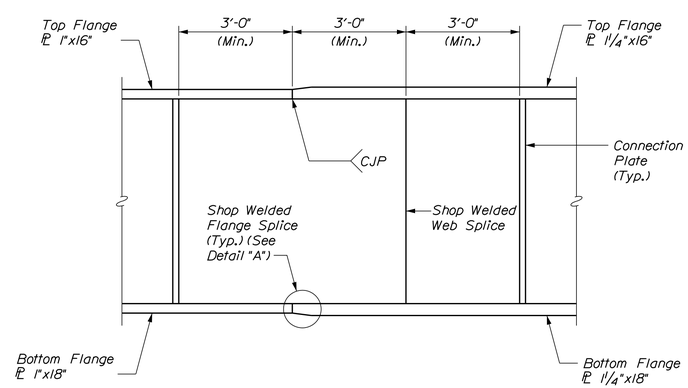

WELDED SPLICE TRANSITION DETAIL

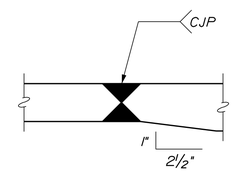

DETAIL "A"

STATE OF MAINE
DEPARTMENT OF TRANSPORTATION

STP-2047(600)

WIN 20476.00

BRIDGE NO. 2807

BRIDGE PLANS

Hoyle, Tanner & Associates, Inc.
www.hoyletanner.com

PROJ. MANAGER	M. PARLIN	BY	DATE
DESIGN-DETAILED	RSW	PBD	APR 2016
CHECKED-REVIEWED	JCR	AML	APR 2016
DESIGN2-DETAILED2	BKM	BKM	APR 2016
DESIGN3-DETAILED3			
REVISIONS 1			
REVISIONS 2			
REVISIONS 3			
REVISIONS 4			
FIELD CHANGES			

STIMSON BRIDGE
LITTLE OSSIPEE RIVER
WATERBORO-LIMERICK YORK COUNTY

GIRDER DETAILS (1 OF 2)

SHEET NUMBER
33
OF 41

Filename: ...\BRIDGE\MSTA\033_Girder_01.dgn Division: BRIDGE Username: common Date:4/19/2016

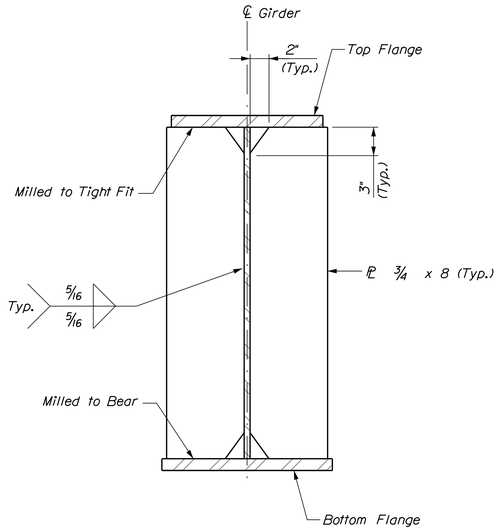

BEARING STIFFENERS AT ABUTMENT

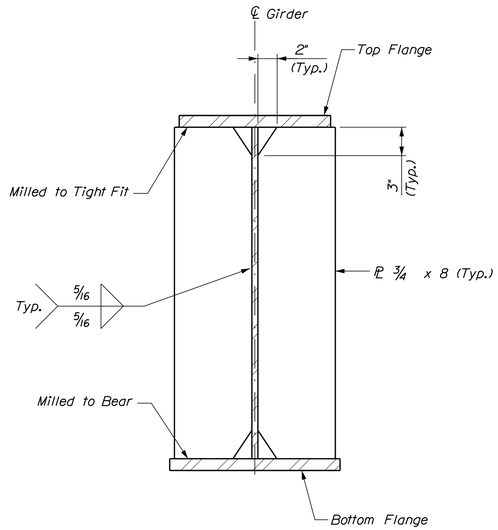

BEARING STIFFENERS AT PIER

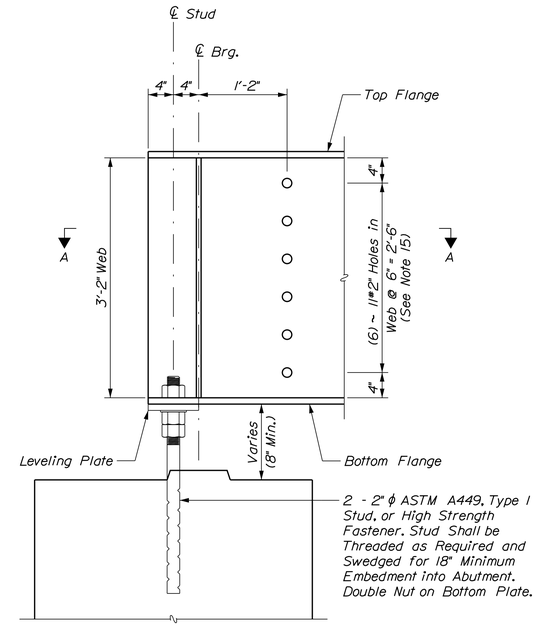

GIRDER END DETAIL

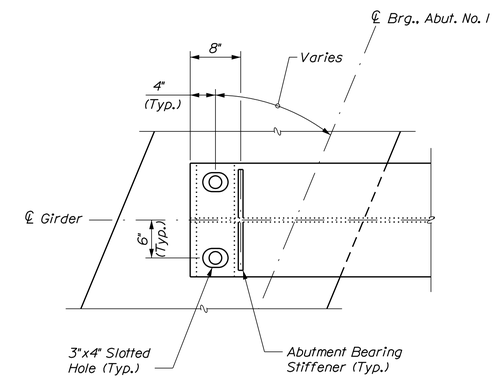

SECTION A-A

(Abutment No. 1 Shown, Abutment No. 2 Similar)

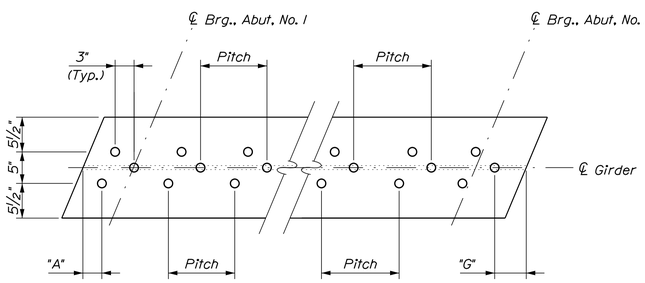

Notes
1. For use with precast deck panels only. If cast-in-place deck is used, follow Standard Detail 505(01).
2. See "Table of Dimensions" on sheet 32 for Shear connector pitch.

ALTERNATIVE SHEAR CONNECTOR DETAIL

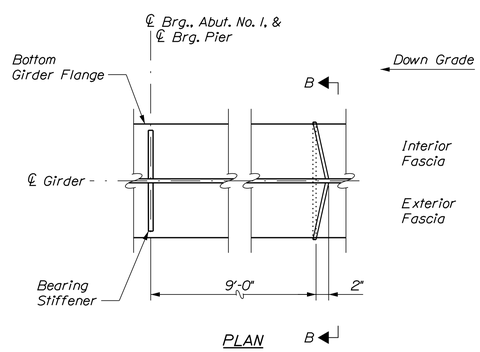

PLAN

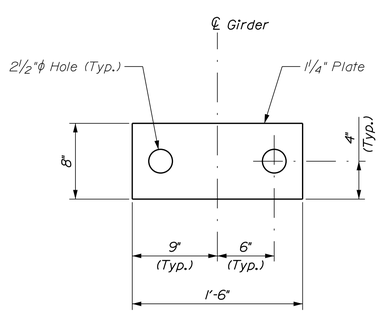

LEVELING PLATE

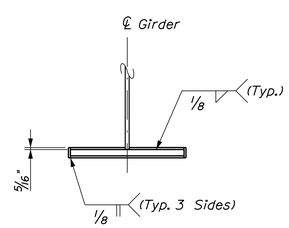

SECTION B-B

DRIP BAR DETAIL

(Abutment No. 1 and Pier Typical)

STRUCTURAL STEEL NOTES

1. Camber ordinates, as shown on sheet 36, are computed to compensate for all dead load deflections and for the curvature of the finished grade profile.

2. No transverse butt weld splices will be allowed in the flange plates or web plates within 10 feet or 10 percent of the span length (whichever is greater) from the points of maximum negative moment or maximum positive moment. Butt weld splices in flanges shall be not less than three feet from transverse butt welds in the web plates and no transverse web or flange butt welds shall be located within three feet of other transverse welds (e.g. connection plates to web welds) on either flange or web. No transverse butt weld splices will be allowed in areas of stress reversal.

3. Sections of flange plates or web plates between transverse shop splices or between a transverse shop splice and a field splice shall be not less than 10 feet in length unless otherwise shown on the plans.

4. Bearing stiffeners shall be plumb after erection and dead loading of the structure. Intermediate connection plates may be either plumb or normal to the top flange.

5. Cross frame connection plates may be either plumb or normal to the top flange.

6. Filler plates shall be weathering steel conforming to the requirements of ASTM A709, Grade 50W.

7. For cross frame details, see sheet 27.

8. Girder ends and cross frames shall be coated to a distance of 10 feet from centerline of bearing at abutments with a zinc rich coating system. Color shall conform to Federal Color Number 30045 (Brown).

9. For field splice details, see sheet 33 of 40. The Contractor may substitute a shop welded splice at either bolted field splice location.

10. Bolted field splice connections shall be made using ⅞" diameter ASTM A325 type 3 H.S. bolts. Hole size shall be 15/16" unless otherwise shown. Bolt threads shall be excluded from the shear plane of field splice connections.

11. Bolted cross frame connections shall be made using ⅞" diameter, ASTM A325 Type 3 H.S. bolts. Hole size shall be 15/16" diameter. The minimum edge distance shall be 1½" unless otherwise shown. Oversized or short-slotted holes are not permitted for use in cross frame connections. Bolt threads shall be excluded from the shear plane of cross frame connections.

12. Prior to structural steel erection, the Contractor shall submit an erection sequence to the Engineer for approval.

13. All web, flange, field splice plates and diaphragms (including connection plates) in tension or stress reversal areas shall conform to zone 2 Charpy V-notch impact test requirements of ASSHTO M270.

14. Girder webs shall be vertical under full dead load.

15. Holes in web shall be vertical (plumb) after superstructure slab placement number 1. Reinforcement through Web holes must be installed after superstructure slab placement number 1.

16. Temporary bearing pedestals, including 2" diameter studs or fasteners, leveling plates and any associated hardware and labor required for installation, shall be incidental to related Contract Items. No separate payment will be made.

STATE OF MAINE
DEPARTMENT OF TRANSPORTATION
STP-2047(600)
WIN 20476.00
BRIDGE NO. 2807
BRIDGE PLANS

Hoyle, Tanner & Associates, Inc.
www.hoyletanner.com

PROJ. MANAGER	M. PARLIN		BY	DATE
DESIGN-DETAILED	RSW	PBD		APR 2016
CHECKED-REVIEWED	JCR	AML		APR 2016
DESIGN2-DETAILED2	BKM	BKM		APR 2016
DESIGN3-DETAILED3				
REVISIONS 1				
REVISIONS 2				
REVISIONS 3				
REVISIONS 4				
FIELD CHANGES				

STIMSON BRIDGE
LITTLE OSSIPEE RIVER
WATERBORO-LIMERICK YORK COUNTY

GIRDER DETAILS (2 OF 2)

SHEET NUMBER
34
OF 41

Filename: ...\BRIDGE\MSTA\034_Girder_02.dgn Division: BRIDGE Username: common Date:4/19/2016

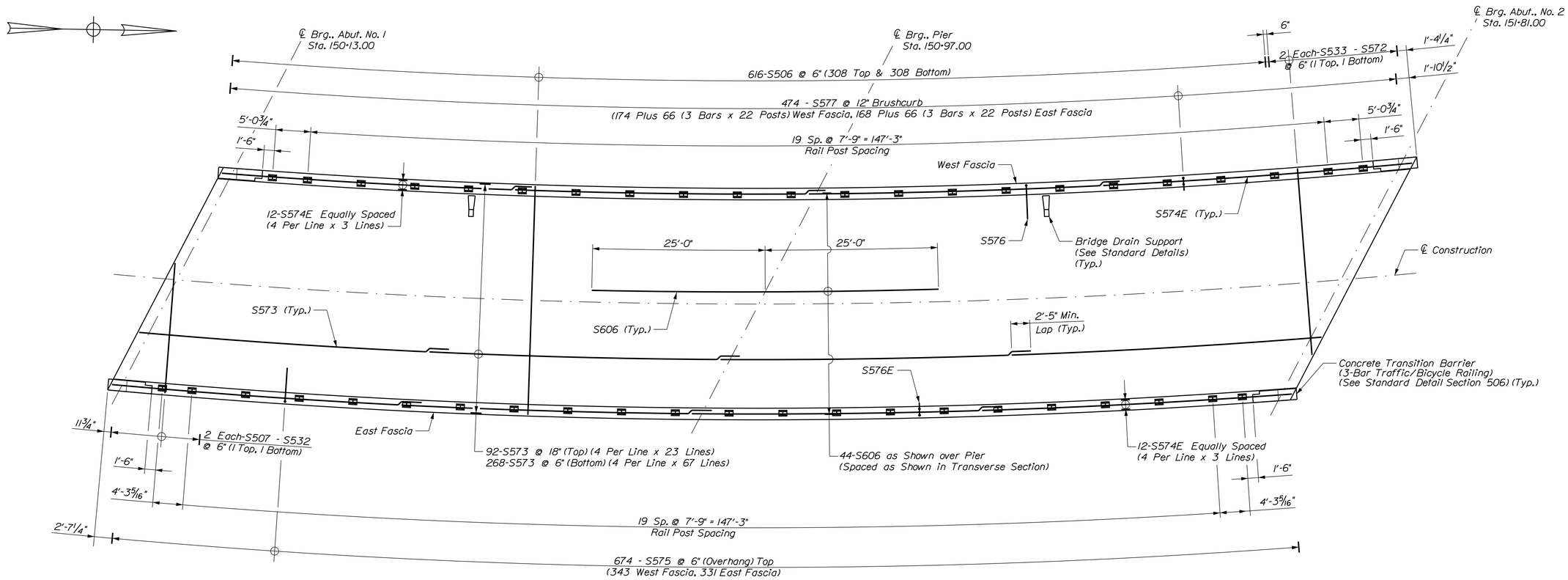

SUPERSTRUCTURE PLAN

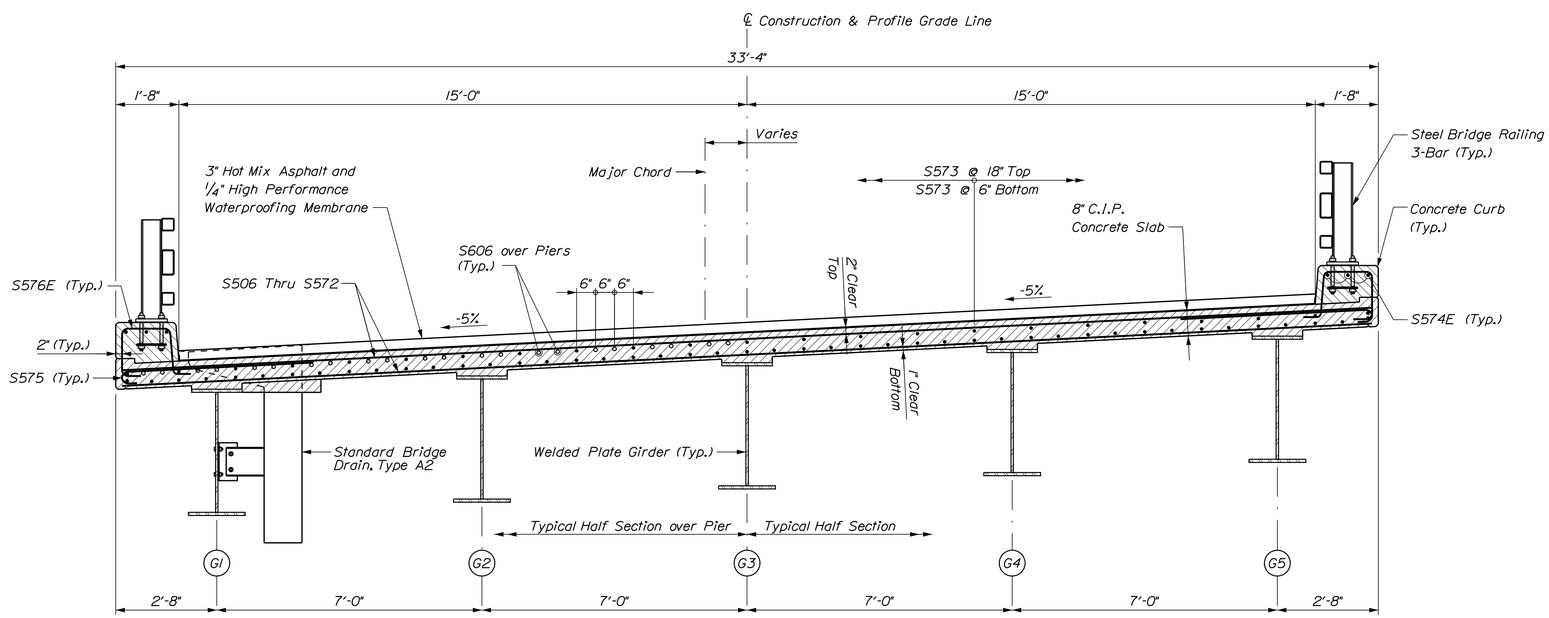

TRANSVERSE SECTION

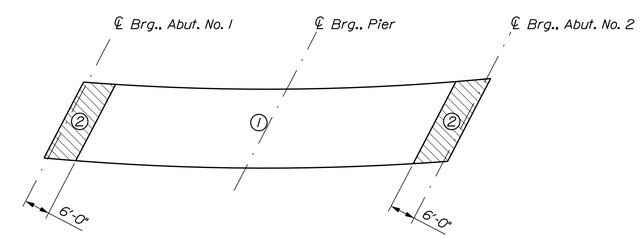

SUPERSTRUCTURE SLAB
PLACEMENT SEQUENCE

STATE OF MAINE
DEPARTMENT OF TRANSPORTATION

STP-2047(600)

WIN 20476.00

BRIDGE NO. 2807

BRIDGE PLANS

Hoyle, Tanner & Associates, Inc.
www.hoyletanner.com

PROJ. MANAGER	M. P-ARLIN	BY	DATE
DESIGN-DETAILED	RSW	PBD	APR 2016
CHECKED-REVIEWED	JCR	AML	APR 2016
DESIGN2-DETAILED2	BKM	BKM	APR 2016
DESIGN3-DETAILED3			
REVISIONS 1			
REVISIONS 2			
REVISIONS 3			
REVISIONS 4			
FIELD CHANGES			

STIMSON BRIDGE
LITTLE OSSIPEE RIVER
WATERBORO-LIMERICK YORK COUNTY

SUPERSTRUCTURE PLAN

SHEET NUMBER
35
OF 41

Filename: ...\035_Superstructure_plan.dgn Division: BRIDGE Username: common Date:4/19/2016

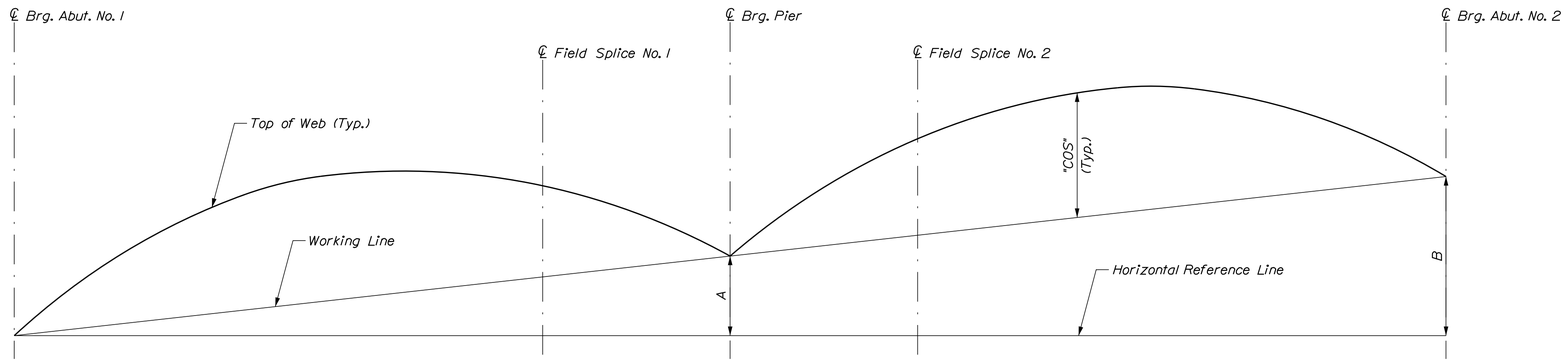

CAMBER DIAGRAM BY SPAN

TABLE OF CAMBER ORDINATES PER SPAN ("COS") (in)

Girder	Span 1											Span 2										
	℄ Brg. Abut. No. 1	1.10	1.20	1.30	1.40	1.50	1.60	1.70	1.80	1.90	℄ Brg. Pier	℄ Brg. Pier	2.10	2.20	2.30	2.40	2.50	2.60	2.70	2.80	2.90	℄ Brg. Abut. No. 2
G1	0.00	0.40	0.74	0.97	1.06	1.01	0.84	0.60	0.33	0.10	0.00	0.00	0.11	0.35	0.63	0.88	1.04	1.08	0.98	0.75	0.40	0.00
G2	0.00	0.38	0.76	1.02	1.11	1.06	0.88	0.55	0.31	0.06	0.00	0.00	0.06	0.32	0.55	0.90	1.06	1.11	1.00	0.81	0.34	0.00
G3	0.00	0.39	0.78	1.04	1.14	1.09	0.91	0.57	0.32	0.06	0.00	0.00	0.06	0.31	0.55	0.90	1.07	1.11	1.01	0.82	0.35	0.00
G4	0.00	0.39	0.79	1.06	1.15	1.11	0.93	0.58	0.33	0.07	0.00	0.00	0.05	0.30	0.54	0.89	1.05	1.10	1.00	0.81	0.35	0.00
G5	0.00	0.44	0.81	1.06	1.17	1.12	0.95	0.68	0.38	0.12	0.00	0.00	0.09	0.32	0.59	0.86	1.04	1.09	1.00	0.76	0.41	0.00

TABLE OF CAMBER DIMENSIONS (ft)

Girder	A	B	A'	B'	C'	D'	P1	P2	P3
G1	0.43	0.86	0.36	0.43	0.58	0.85	62.26	44.00	62.40
G2	0.42	0.85	0.36	0.42	0.58	0.85	62.13	44.00	62.20
G3	0.42	0.84	0.36	0.42	0.57	0.84	62.00	44.00	62.00
G4	0.42	0.83	0.35	0.42	0.57	0.83	61.87	44.00	61.81
G5	0.41	0.83	0.35	0.41	0.56	0.83	61.75	44.00	61.62

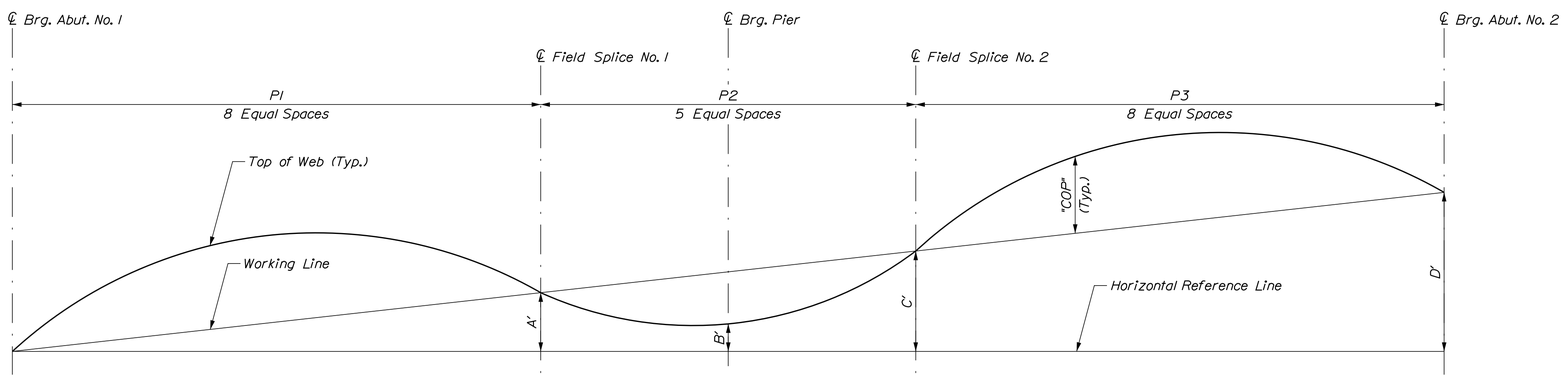

CAMBER DIAGRAM BY PIECE

TABLE OF CAMBER ORDINATES PER SPAN ("COP") (in)

Girder	Piece 1									Piece 2						Piece 3								
	℄ Brg. Abut. No. 1	1/8	2/8	3/8	4/8	5/8	6/8	7/8	℄ Field Splice No. 1	℄ Field Splice No. 1	1/5	2/5	3/5	4/5	℄ Field Splice No. 2	℄ Field Splice No. 2	1/8	2/8	3/8	4/8	5/8	6/8	7/8	℄ Brg. Abut. No. 2
G1	0.00	0.31	0.57	0.74	0.80	0.74	0.57	0.31	0.00	0.00	-0.28	-0.47	-0.47	-0.28	0.00	0.00	0.32	0.58	0.75	0.81	0.75	0.58	0.33	0.00
G2	0.00	0.33	0.60	0.77	0.84	0.77	0.59	0.32	0.00	0.00	-0.29	-0.49	-0.49	-0.29	0.00	0.00	0.33	0.60	0.78	0.84	0.78	0.60	0.34	0.00
G3	0.00	0.33	0.61	0.79	0.85	0.79	0.61	0.33	0.00	0.00	-0.30	-0.50	-0.50	-0.30	0.00	0.00	0.32	0.59	0.76	0.82	0.76	0.58	0.30	0.00
G4	0.00	0.34	0.62	0.80	0.86	0.80	0.61	0.34	0.00	0.00	-0.30	-0.50	-0.50	-0.30	0.00	0.00	0.32	0.59	0.77	0.83	0.77	0.60	0.33	0.00
G5	0.00	0.34	0.62	0.81	0.87	0.81	0.62	0.34	0.00	0.00	-0.29	-0.50	-0.50	-0.30	0.00	0.00	0.31	0.58	0.75	0.82	0.75	0.57	0.30	0.00

STATE OF MAINE
DEPARTMENT OF TRANSPORTATION

STP-2047(600)

WIN 20476.00

BRIDGE NO. 2807

BRIDGE PLANS

Hoyle, Tanner & Associates, Inc.
www.hoyletanner.com

PROJ. MANAGER	M. PARLIN	BY	DATE
DESIGN-DETAILED	RSW	PBD	APR 2016
CHECKED-REVIEWED	JCR	AML	APR 2016
DESIGN2-DETAILED2	BKM	BKM	APR 2016
DESIGN3-DETAILED3			------
REVISIONS 1			------
REVISIONS 2			------
REVISIONS 3			------
REVISIONS 4			------
FIELD CHANGES			------

STIMSON BRIDGE
LITTLE OSSIPEE RIVER
WATERBORO-LIMERICK YORK COUNTY

SUPERSTRUCTURE DETAILS
(1 OF 2)

SHEET NUMBER
36
OF 41

Filename: ...\MSTA\036_Superstructure_01.dgn Division: BRIDGE Username: common Date:4/19/2016

DEAD LOAD DEFLECTION TABLE - GIRDER 1 (in)

		℄ Brg. Abut. No. 1	1.10	1.20	1.30	1.40	1.50	1.60	1.70	1.80	1.90	℄ Brg. Pier
Span 1	Steel	0.000	0.079	0.146	0.190	0.208	0.200	0.166	0.118	0.065	0.020	0.000
	Fluid	0.000	0.249	0.457	0.596	0.652	0.624	0.518	0.367	0.200	0.060	0.000
	Superimposed	0.000	0.075	0.137	0.180	0.197	0.189	0.158	0.133	0.062	0.019	0.000
		℄ Brg. Pier	2.10	2.20	2.30	2.40	2.50	2.60	2.70	2.80	2.90	℄ Brg. Abut. No. 2
Span 2	Steel	0.000	0.022	0.069	0.124	0.173	0.205	0.212	0.193	0.147	0.079	0.000
	Fluid	0.000	0.068	0.215	0.386	0.540	0.641	0.665	0.604	0.460	0.250	0.000
	Superimposed	0.000	0.021	0.065	0.117	0.163	0.193	0.200	0.181	0.138	0.075	0.000

DEAD LOAD DEFLECTION TABLE - GIRDER 2 (in)

		℄ Brg. Abut. No. 1	1.10	1.20	1.30	1.40	1.50	1.60	1.70	1.80	1.90	℄ Brg. Pier
Span 1	Steel	0.000	0.073	0.148	0.198	0.215	0.207	0.173	0.107	0.060	0.012	0.000
	Fluid	0.000	0.236	0.478	0.636	0.692	0.664	0.552	0.341	0.189	0.036	0.000
	Superimposed	0.000	0.068	0.137	0.183	0.199	0.192	0.160	0.100	0.056	0.011	0.000
		℄ Brg. Pier	2.10	2.20	2.30	2.40	2.50	2.60	2.70	2.80	2.90	℄ Brg. Abut. No. 2
Span 2	Steel	0.000	0.012	0.061	0.108	0.175	0.206	0.215	0.195	0.157	0.067	0.000
	Fluid	0.000	0.037	0.197	0.347	0.564	0.655	0.693	0.627	0.508	0.215	0.000
	Superimposed	0.000	0.011	0.057	0.100	0.162	0.191	0.198	0.179	0.145	0.062	0.000

DEAD LOAD DEFLECTION TABLE - GIRDER 3 (in)

		℄ Brg. Abut. No. 1	1.10	1.20	1.30	1.40	1.50	1.60	1.70	1.80	1.90	℄ Brg. Pier
Span 1	Steel	0.000	0.075	0.151	0.202	0.220	0.212	0.177	0.110	0.062	0.012	0.000
	Fluid	0.000	0.244	0.492	0.656	0.715	0.687	0.572	0.356	0.199	0.039	0.000
	Superimposed	0.000	0.069	0.139	0.185	0.202	0.195	0.163	0.102	0.057	0.011	0.000
		℄ Brg. Pier	2.10	2.20	2.30	2.40	2.50	2.60	2.70	2.80	2.90	℄ Brg. Abut. No. 2
Span 2	Steel	0.000	0.011	0.060	0.107	0.174	0.206	0.215	0.195	0.157	0.067	0.000
	Fluid	0.000	0.036	0.195	0.346	0.566	0.670	0.700	0.635	0.514	0.219	0.000
	Superimposed	0.000	0.010	0.056	0.099	0.160	0.189	0.197	0.178	0.144	0.061	0.000

DEAD LOAD DEFLECTION TABLE - GIRDER 4 (in)

		℄ Brg. Abut. No. 1	1.10	1.20	1.30	1.40	1.50	1.60	1.70	1.80	1.90	℄ Brg. Pier
Span 1	Steel	0.000	0.076	0.153	0.204	0.223	0.215	0.180	0.113	0.064	0.013	0.000
	Fluid	0.000	0.246	0.496	0.662	0.722	0.695	0.580	0.363	0.204	0.042	0.000
	Superimposed	0.000	0.070	0.142	0.190	0.207	0.200	0.167	0.105	0.059	0.012	0.000
		℄ Brg. Pier	2.10	2.20	2.30	2.40	2.50	2.60	2.70	2.80	2.90	℄ Brg. Abut. No. 2
Span 2	Steel	0.000	0.011	0.059	0.105	0.172	0.204	0.213	0.193	0.156	0.067	0.000
	Fluid	0.000	0.033	0.188	0.337	0.555	0.658	0.689	0.626	0.508	0.217	0.000
	Superimposed	0.000	0.010	0.056	0.099	0.161	0.190	0.198	0.180	0.145	0.062	0.000

DEAD LOAD DEFLECTION TABLE - GIRDER 5 (in)

		℄ Brg. Abut. No. 1	1.10	1.20	1.30	1.40	1.50	1.60	1.70	1.80	1.90	℄ Brg. Pier
Span 1	Steel	0.000	0.086	0.158	0.207	0.227	0.219	0.184	0.132	0.073	0.024	0.000
	Fluid	0.000	0.274	0.505	0.660	0.725	0.696	0.585	0.418	0.232	0.075	0.000
	Superimposed	0.000	0.082	0.151	0.198	0.217	0.209	0.176	0.126	0.070	0.023	0.000
		℄ Brg. Pier	2.10	2.20	2.30	2.40	2.50	2.60	2.70	2.80	2.90	℄ Brg. Abut. No. 2
Span 2	Steel	0.000	0.018	0.063	0.115	0.168	0.202	0.212	0.193	0.148	0.080	0.000
	Fluid	0.000	0.057	0.197	0.363	0.531	0.640	0.672	0.615	0.471	0.256	0.000
	Superimposed	0.000	0.018	0.062	0.113	0.163	0.196	0.205	0.187	0.143	0.078	0.000

Deflections given at 10th points.

BOTTOM OF SLAB ELEVATION TABLE

	Girder	℄ Brg. Abut. No. 1	1.10	1.20	1.30	1.40	1.50	1.60	1.70	1.80	1.90	℄ Brg. Pier
Span 1	G1	321.06	321.13	321.19	321.25	321.30	321.34	321.37	321.40	321.42	321.45	321.48
	G2	321.39	321.46	321.53	321.59	321.64	321.68	321.71	321.73	321.75	321.78	321.82
	G3	321.73	321.80	321.86	321.92	321.97	322.01	322.04	322.06	322.08	322.11	322.15
	G4	322.06	322.13	322.20	322.26	322.31	322.35	322.38	322.39	322.42	322.44	322.48
	G5	322.40	322.47	322.54	322.59	322.64	322.68	322.71	322.73	322.75	322.78	322.81
		℄ Brg. Pier	2.10	2.20	2.30	2.40	2.50	2.60	2.70	2.80	2.90	℄ Brg. Abut. No. 2
Span 2	G1	321.48	321.54	321.59	321.66	321.71	321.77	321.81	321.85	321.88	321.90	321.91
	G2	321.82	321.86	321.92	321.98	322.05	322.10	322.14	322.18	322.21	322.22	322.24
	G3	322.15	322.19	322.25	322.31	322.38	322.43	322.47	322.51	322.54	322.55	322.57
	G4	322.48	322.52	322.58	322.64	322.71	322.76	322.80	322.84	322.87	322.88	322.90
	G5	322.81	322.86	322.92	322.97	323.03	323.09	323.13	323.17	323.19	323.21	323.22

Bottom of slab elevations given at 10th points.

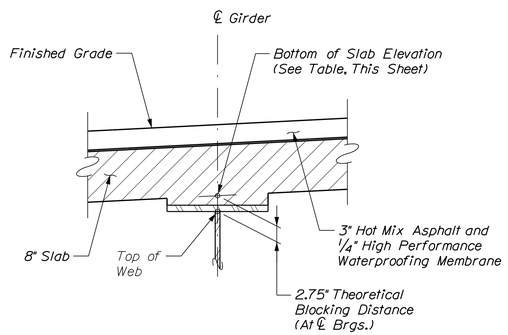

BLOCKING DETAIL

SUPERSTRUCTURE NOTES

1. The theoretical blocking used for design of the structure is 2¾" inch at the centerline of bearing of the abutments and pier. Refer to Standard Detail 502(03) for blocking details.

2. Reinforcing steel shall have a minimum concrete cover of 2 inches unless otherwise noted.

3. Adjust reinforcing steel to fit around the bridge drains in a manner approved by the Resident. Do not cut transverse reinforcing bars.

4. Form a one inch V-groove on the fascias at the horizontal joint between the curb and slab.

5. The superstructure slab concrete (except for a 6 foot legth at both ends) shall be placed in one continuous operation and the concrete shall be kept plastic until the entire placement has been made. The beginning and end 6 feet shall be completed in a separate placement. A minimum of 5 days shall elapse between successive partial placements.

6. Payment for reinforcing steel fabricated, delivered, and placed in the cast-in-place portion of the structural concrete slab will be considered incidental to the appropriate Standard Specifications Section 502 pay item.

7. At the Contractor's option, Precast Deck Panels may be used in place of the full depth cast-in-place slab in accordance with Special Provision 502, Structural Concrete - Precast Deck Panels, and in accordance with the Standard Details.

8. The Contractor shall install Transition Barrier vertical closed stirrups, as shown in Standard Details Section 526, prior to the placement of the curb or sidewalk concrete.

9. Provide 3 additional stirrups in the curbs at each Transition Barrier location.

STATE OF MAINE
DEPARTMENT OF TRANSPORTATION
STP-2047(600)
WIN 20476.00
BRIDGE NO. 2807
BRIDGE PLANS

Hoyle, Tanner & Associates, Inc.
www.hoyletanner.com

PROJ. MANAGER	M. PARLIN	BY	DATE
DESIGN-DETAILED	RSW	PBD	APR 2016
CHECKED-REVIEWED	JCR	AML	APR 2016
DESIGN2-DETAILED2	BKM	BKM	APR 2016
DESIGN3-DETAILED3			
REVISIONS 1			
REVISIONS 2			
REVISIONS 3			
REVISIONS 4			
FIELD CHANGES			

STIMSON BRIDGE
LITTLE OSSIPEE RIVER
WATERBORO-LIMERICK YORK COUNTY

SUPERSTRUCTURE DETAILS
(2 OF 2)

SHEET NUMBER
37
OF 41

Filename: ...\MSTA\037_Superstructure_02.dgn Division: BRIDGE Username: common Date:4/19/2016

STRAIGHT BARS

MARK	QTY.	LENGTH	LOCATION
Abutment No. 1			
A506	14	15'-1"	Longitudinal - N.F. - SE Wing
A507	14	12'-7"	Longitudinal - N.F. - SW Wing
A508	5	13'-4"	Longitudinal - N.F. - SE Wing
A509	4	10'-10"	Longitudinal - N.F. - SW Wing
A510	1	12'-2"	Longitudinal - N.F. - SE Wing
A511	1	11'-1"	Longitudinal - N.F. - SE Wing
A512	1	9'-11"	Longitudinal - N.F. - SE Wing
A513	1	8'-10"	Longitudinal - N.F. - SE Wing
A514	1	7'-8"	Longitudinal - N.F. - SE Wing
A515	1	6'-7"	Longitudinal - N.F. - SE Wing
A516	1	9'-6"	Longitudinal - N.F. - SW Wing
A517	1	8'-5"	Longitudinal - N.F. - SW Wing
A518	1	7'-4"	Longitudinal - N.F. - SW Wing
A519	1	6'-3"	Longitudinal - N.F. - SW Wing
A520	1	13'-2"	Longitudinal - F.F. - SW Wing
A521	1	12'-1"	Longitudinal - F.F. - SW Wing
A522	1	11'-0"	Longitudinal - F.F. - SW Wing
A523	1	9'-11"	Longitudinal - F.F. - SW Wing
A524	1	5'-4"	Longitudinal - N.F. - SE Wing
A525	1	4'-3"	Longitudinal - N.F. - SE Wing
A526	1	3'-1"	Longitudinal - N.F. - SE Wing
A527	1	4'-2"	Longitudinal - F.F. - SE Wing
A528	1	3'-1"	Longitudinal - F.F. - SE Wing
A529	1	2'-0"	Longitudinal - F.F. - SE Wing
A530	1	2'-9"	Longitudinal - N.F. - SW Wing
A531	1	1'-7"	Longitudinal - N.F. - SW Wing
A532	1	3'-10"	Longitudinal - F.F. - SW Wing
A533	1	2'-9"	Longitudinal - F.F. - SW Wing
A534	1	14'-11"	Longitudinal - Mid. & Bot. - SE Wing
A535	1	11'-0"	Longitudinal - Mid. & Bot. - SW Wing
A606	19	35'-9"	Longitudinal - N.F. - Abut.
A607	20	36'-3"	Longitudinal - N.F. & F.F. - Abut.
A608	2	33'-11"	Longitudinal - N.F. & F.F. - Abut.
A609	2	22'-8"	Longitudinal - N.F. & F.F. - Abut.
A610	2	11'-4"	Longitudinal - N.F. & F.F. - Abut.
A906	19	17'-0"	Longitudinal - F.F. - SE Wing
A907	18	14'-6"	Longitudinal - F.F. - SW Wing
A908	1	15'-10"	Longitudinal - F.F. - SE Wing
A909	1	14'-8"	Longitudinal - F.F. - SE Wing
A910	1	13'-7"	Longitudinal - F.F. - SE Wing
A911	1	12'-5"	Longitudinal - F.F. - SE Wing
A912	1	11'-4"	Longitudinal - F.F. - SE Wing
A913	1	10'-2"	Longitudinal - F.F. - SE Wing

MARK	QTY.	LENGTH	LOCATION
Abutment No. 2			
B506	14	12'-3"	Longitudinal - N.F. - NW Wing
B507	14	15'-2"	Longitudinal - N.F. - NE Wing
B508	4	10'-6"	Longitudinal - N.F. - NW Wing
B509	5	13'-5"	Longitudinal - N.F. - NE Wing
B510	1	9'-8"	Longitudinal - N.F. - NW Wing
B511	1	8'-6"	Longitudinal - N.F. - NW Wing
B512	1	7'-5"	Longitudinal - N.F. - NW Wing
B513	1	6'-3"	Longitudinal - N.F. - NW Wing
B514	1	12'-5"	Longitudinal - N.F. - NE Wing
B515	1	11'-5"	Longitudinal - N.F. - NE Wing
B516	1	10'-5"	Longitudinal - N.F. - NE Wing
B517	1	9'-5"	Longitudinal - N.F. - NE Wing
B518	1	8'-4"	Longitudinal - N.F. - NE Wing
B519	1	7'-4"	Longitudinal - N.F. - NE Wing
B520	1	5'-8"	Longitudinal - N.F. - NW Wing
B521	1	4'-6"	Longitudinal - N.F. - NW Wing
B522	1	3'-11"	Longitudinal - F.F. - NW Wing
B523	1	2'-9"	Longitudinal - F.F. - NW Wing
B524	1	3'-3"	Longitudinal - N.F. - NE Wing
B525	1	2'-3"	Longitudinal - N.F. - NE Wing
B526	1	1'-3"	Longitudinal - N.F. - NE Wing
B527	1	4'-11"	Longitudinal - F.F. - NE Wing
B528	1	3'-11"	Longitudinal - F.F. - NE Wing
B529	1	2'-11"	Longitudinal - F.F. - NE Wing
B530	1	12'-8"	Mid. Bot. - NW Wing
B531	1	13'-9"	Mid. Bot. - NE Wing
B606	19	39'-1"	Longitudinal - N.F. - Abut.
B607	18	39'-5"	Longitudinal - N.F. & F.F. - Abut.
B608	2	30'-9"	Longitudinal - N.F. & F.F. - Abut.
B609	2	17'-7"	Longitudinal - N.F. & F.F. - Abut.
B906	18	14'-2"	Longitudinal - F.F. - NW Wing
B907	19	17'-1"	Longitudinal - F.F. - NE Wing
B908	1	13'-4"	Longitudinal - F.F. - NW Wing
B909	1	12'-2"	Longitudinal - F.F. - NW Wing
B910	1	11'-1"	Longitudinal - F.F. - NW Wing
B911	1	9'-11"	Longitudinal - F.F. - NW Wing
B912	1	16'-1"	Longitudinal - F.F. - NE Wing
B913	1	15'-1"	Longitudinal - F.F. - NE Wing
B914	1	14'-1"	Longitudinal - F.F. - NE Wing
B915	1	13'-1"	Longitudinal - F.F. - NE Wing
B916	1	12'-0"	Longitudinal - F.F. - NE Wing
B917	1	11'-0"	Longitudinal - F.F. - NE Wing

BENT BARS

MARK	QTY.	LENGTH	TYPE	A	B	C	D	E	F	G	H	O	R	LOCATION
Abutment No. 1														
A456	246	3'-8"	T9		6"	2'-8"	6"							Ties - SE & SW Wings & Abut.
A457	209	4'-4"	T9		6"	3'-4"	6"							Ties - Abut. Stem Below Const. Joint
A550	32	6'-11"	W				1'-0"	4'-11"	1'-0"		8 1/2"			Approach Slab Dowel
A556	1	14'-2"	V				11'-10"	2'-4"			11 3/8"			N.F. - SE Top of Wing
A557	1	13'-1"	V				11'-10"	1'-3"			6 1/8"			F.F. - SE Top of Wing
A558	1	9'-2"	V				8'-8"	6"			2 1/2"			N.F. - SW Top of Wing
A559	1	10'-3"	V				8'-8"	1'-7"			8"			F.F. - SW Top of Wing
A561	22	20'-2"	U		8'-9"	2'-8"	8'-9"							Hoop - SE & SW Bottom of Wing
A562	1	19'-6"	U		8'-5"	2'-8"	8'-5"							Hoop - SW Bottom of Wing
A563	30	11'-1"	U		1'-1"	6'-8"	3'-4"							Hoop - Seat (Between Piles)
A564	7	8'-10"	S		1'-1"	6'-8"	1'-1"							Hoop - Seat (at Piles)
A565	1	6'-8"	U		2'-0"	2'-8"	2'-0"							Hoop - SE Top of Wing
A566	1	7'-6"	U		2'-5"	2'-8"	2'-5"							Hoop - SE Top of Wing
A567	1	8'-6"	U		2'-11"	2'-8"	2'-11"							Hoop - SE Top of Wing
A568	1	9'-4"	U		3'-4"	2'-8"	3'-4"							Hoop - SE Top of Wing
A569	1	10'-4"	U		3'-10"	2'-8"	3'-10"							Hoop - SE Top of Wing
A570	1	11'-2"	U		4'-3"	2'-8"	4'-3"							Hoop - SE Top of Wing
A571	1	12'-0"	U		4'-8"	2'-8"	4'-8"							Hoop - SE Top of Wing
A572	1	13'-0"	U		5'-2"	2'-8"	5'-2"							Hoop - SE Top of Wing
A573	1	13'-10"	U		5'-7"	2'-8"	5'-7"							Hoop - SE Top of Wing
A574	1	14'-8"	U		6'-0"	2'-8"	6'-0"							Hoop - SE Top of Wing
A575	1	15'-6"	U		6'-5"	2'-8"	6'-5"							Hoop - SE Top of Wing
A576	2	16'-4"	U		6'-10"	2'-8"	6'-10"							Hoop - SE Top of Wing
A577	1	5'-6"	U		1'-5"	2'-8"	1'-5"							Hoop - SW Top of Wing
A578	1	6'-4"	U		1'-10"	2'-8"	1'-10"							Hoop - SW Top of Wing
A579	1	7'-4"	U		2'-4"	2'-8"	2'-4"							Hoop - SW Top of Wing
A580	1	8'-4"	U		2'-10"	2'-8"	2'-10"							Hoop - SW Top of Wing
A581	1	9'-2"	U		3'-3"	2'-8"	3'-3"							Hoop - SW Top of Wing
A582	2	10'-2"	U		3'-9"	2'-8"	3'-9"							Hoop - SW Top of Wing
A583	1	11'-0"	U		4'-2"	2'-8"	4'-2"							Hoop - SW Top of Wing
A584	1	12'-0"	U		4'-8"	2'-8"	4'-8"							Hoop - SW Top of Wing
A585	1	12'-8"	U		5'-0"	2'-8"	5'-0"							Hoop - SW Top of Wing
A586	29	3'-2"	W				1'-0"	1'-2"	1'-0"		8 7/8"			Deck Haunch
A656	14	37'-11"	U		1'-1"	35'-9"	1'-1"							Hoop - F.F. - Seat
A850	131	15'-10"	L	4'-3"	11'-7"									Hook - N.F. & F.F. - Deck to Abut.
A856	20	24'-6"	S		10'-11"	2'-8"	10'-11"							Hoop - Bot. Abut. (Between Piles)
A857	20	25'-8"	S		11'-6"	2'-8"	11-6"							Hoop - Bot. Abut. (Between Piles)
A858	18	26'-10"	S		12'-1"	2'-8"	12'-1"							Hoop - Bot. Abut. (Between Piles)
A859	3	11'-0"	JC	1'-4"	8'-9"	11"								Vertical - N.F. Abut. (at Pile)
A860	3	10'-8"	JC	1'-4"	8'-5"	11"								Vertical - N.F. Abut. (at Pile)
A861	3	10'-4"	JC	1'-4"	8'-1"	11"								Vertical - N.F. Abut. (at Pile)
A862	3	10'-0"	JC	1'-4"	7'-9"	11"								Vertical - N.F. Abut. (at Pile)
A863	3	9'-8"	JC	1'-4"	7'-5"	11"								Vertical - N.F. Abut. (at Pile)
A864	6	11'-10"	C		10'-11"	11"								Vertical - F.F. Abut. (at Pile)
A865	6	12'-5"	C		11'-6"	11"								Vertical - F.F. Abut. (at Pile)
A866	3	13'-0"	C		12'-1"	11"								Vertical - F.F. Abut. (at Pile)
Abutment No. 2														
B456	218	3'-8"	T9		6"	2'-8"	6"							Ties - NE & NW Wings & Abut.
B457	226	4'-4"	T9		6"	3'-4"	6"							Ties - NE & NW Wings & Abut.
B550	32	6'-11"	W				1'-0"	4'-11"	1'-0"		8 1/2"			Approach Slab Dowel
B556	1	11'-10"	V				8'-7"	3'-3"			1'- 3 5/8"			N.F. - Top - NW Wing
B557	1	10'-0"	V				8'-7"	1'-5"			7"			F.F. - Top - NW Wing
B558	1	11'-6"	V				10'-11"	7"			3 1/8"			N.F. - Top - NE Wing
B559	1	13'-1"	V				10'-11"	2'-2"			11 1/2"			F.F. - Top - NE Wing
B561	22	20'-0"	U		8'-8"	2'-8"	8'-8"							Hoop - Bot. NW & NE Wings
B562	1	19'-10"	U		8'-7"	2'-8"	8'-7"							Hoop - Bot. NW Wing
B563	32	10'-11"	U		1'-1"	6'-7"	3'-3"							Hoop - Seat (Between Piles)
B564	7	8'-9"	U		1'-1"	6'-7"	1'-1"							Hoop - Seat (at Piles)
B565	1	6'-10"	U		2'-1"	2'-8"	2'-1"							Hoop - Top NW Wing
B566	1	7'-8"	U		2'-6"	2'-8"	2'-6"							Hoop - Top NW Wing
B567	1	8'-6"	U		2'-11"	2'-8"	2'-11"							Hoop - Top NW Wing
B568	1	9'-4"	U		3'-4"	2'-8"	3'-4"							Hoop - Top NW Wing
B569	1	10'-2"	U		3'-9"	2'-8"	3'-9"							Hoop - Top NW Wing
B570	1	11'-2"	U		4'-3"	2'-8"	4'-3"							Hoop - Top NW Wing
B571	1	12'-0"	U		4'-8"	2'-8"	4'-8"							Hoop - Top NW Wing
B572	2	12'-10"	U		5'-1"	2'-8"	5'-1"							Hoop - Top NW Wing
B573	1	6'-10"	U		2'-1"	2'-8"	2'-1"							Hoop - Top NE Wing
B574	1	7'-10"	U		2'-7"	2'-8"	2'-7"							Hoop - Top NE Wing
B575	1	8'-10"	U		3'-1"	2'-8"	3'-1"							Hoop - Top NE Wing
B576	1	9'-10"	U		3'-7"	2'-8"	3'-7"							Hoop - Top NE Wing
B577	1	10'-10"	U		4'-1"	2'-8"	4'-1"							Hoop - Top NE Wing
B578	1	11'-8"	U		4'-6"	2'-8"	4'-6"							Hoop - Top NE Wing
B579	1	12'-8"	U		5'-0"	2'-8"	5'-0"							Hoop - Top NE Wing
B580	1	13'-8"	U		5'-6"	2'-8"	5'-6"							Hoop - Top NE Wing
B581	1	14'-8"	U		6'-0"	2'-8"	6'-0"							Hoop - Top NE Wing
B582	1	15'-8"	U		6'-6"	2'-8"	6'-6"							Hoop - Top NE Wing
B583	1	16'-2"	U		6'-9"	2'-8"	6'-9"							Hoop - Top NE Wing
B584	32	3'-2"	W				1'-0"	1'-2"	1'-0"		8 7/8"			Deck Haunch
B656	14	41'-3"	U		1'-1"	39'-1"	1'-1"							Hoop - F.F. - Abut. Stem
B850	119	16'-1"	L	4'-6"	11'-7"									
B856	24	24'-0"	U		10'-8"	2'-8"	10'-8"							Hoop - Bot. Abut. (Between Piles)
B857	24	25'-2"	U		11'-3"	2'-8"	11'-3"							Hoop - Bot. Abut. (Between Piles)
B858	17	26'-4"	U		11'-10"	2'-8"	11'-10"							Hoop - Bot. Abut. (Between Piles)
B859	3	9'-6"	JC	1'-4"	7'-3"	11"								Vertical - N.F. - Abut. (at Pile)
B860	3	9'-10"	JC	1'-4"	7'-7"	11"								Vertical - N.F. - Abut. (at Pile)
B861	3	10'-2"	JC	1'-4"	7'-11"	11"								Vertical - N.F. - Abut. (at Pile)

TYPE - BENDING DIAGRAMS

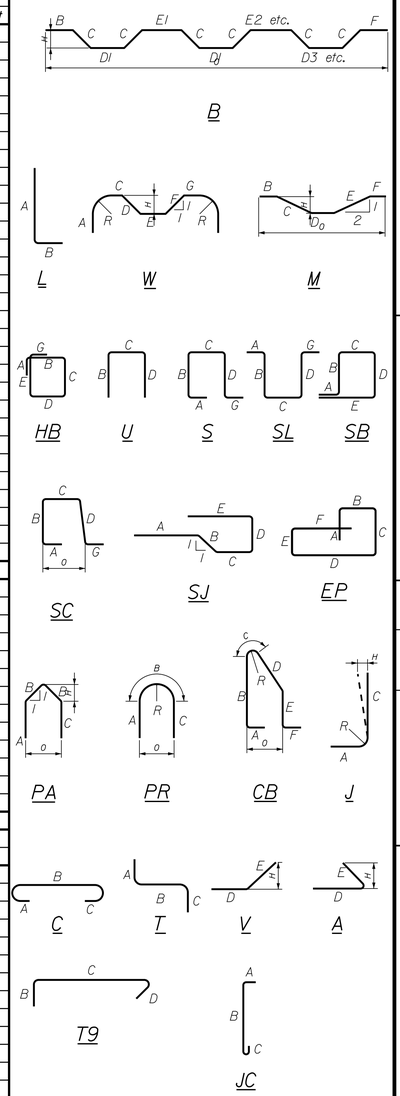

All dimensions are out-to-out of bar.

Bending details and hooks shall conform to the recommendations of the current revision of ACI Standard 315 and ACI Standard 318.

Reinforcing Bar: Plain - ASTM A615/A615M, Grade 60
Epoxy Coated - ASTM A775/A775M, Grade 60

GENERAL NOTES

1. The first two digits following the letter(s) of the mark indicate the size ofthe bar:

   Mark "A502" = bar size #5
   Mark "P805" = bar size #8
   Mark "S650" = bar size #6

2. Each crank bar, Type B, may be replaced by two (2) straight bars (one top and one bottom) of the same bar size as the crank bar. Payment in either case shall be based on crank bars as schedule on the plans.

3. Mark Legend:

   "E" = Epoxy Coated

STATE OF MAINE
DEPARTMENT OF TRANSPORTATION

STP-2047(600)

WIN 20476.00

BRIDGE NO. 2807

BRIDGE PLANS

Hoyle, Tanner & Associates, Inc.
www.hoyletanner.com

PROJ. MANAGER	M. P-ARLIN	BY	DATE
DESIGN-DETAILED	RSW	PBD	APR 2016
CHECKED-REVIEWED	JCR	AML	APR 2016
DESIGN2-DETAILED2	BKM	BKM	APR 2016
DESIGN3-DETAILED3			
REVISIONS 1			
REVISIONS 2			
REVISIONS 3			
REVISIONS 4			
FIELD CHANGES			

STIMSON BRIDGE
LITTLE OSSIPEE RIVER
WATERBORO-LIMERICK YORK COUNTY

REINFORCING STEEL SCHEDULE (1 OF 2)

SHEET NUMBER

38

OF 41

Filename: ...\BRIDGE\MSTA\038_Rebar_01.dgn Division: BRIDGE Username: common Date:4/19/2016

STRAIGHT BARS

MARK	QTY.	LENGTH	LOCATION
			Approach Slab No. 1
AS506	15	31'-0"	Transverse - Bottom
AS606	63	15'-1"	Longitudinal - Bottom
			Superstructure
S506	616	33'-0"	Transverse - Top & Bottom - Deck
S507	2	1'-11"	Transverse - Top & Bottom - Deck
S508	2	3'-2"	Transverse - Top & Bottom - Deck
S509	2	4'-4"	Transverse - Top & Bottom - Deck
S510	2	5'-7"	Transverse - Top & Bottom - Deck
S511	2	6'-10"	Transverse - Top & Bottom - Deck
S512	2	8'-0"	Transverse - Top & Bottom - Deck
S513	2	9'-3"	Transverse - Top & Bottom - Deck
S514	2	10'-6"	Transverse - Top & Bottom - Deck
S515	2	11'-8"	Transverse - Top & Bottom - Deck
S516	2	12'-11"	Transverse - Top & Bottom - Deck
S517	2	14'-1"	Transverse - Top & Bottom - Deck
S518	2	15'-4"	Transverse - Top & Bottom - Deck
S519	2	16'-6"	Transverse - Top & Bottom - Deck
S520	2	17'-8"	Transverse - Top & Bottom - Deck
S521	2	18'-11"	Transverse - Top & Bottom - Deck
S522	2	20'-1"	Transverse - Top & Bottom - Deck
S523	2	21'-3"	Transverse - Top & Bottom - Deck
S524	2	22'-5"	Transverse - Top & Bottom - Deck
S525	2	23'-8"	Transverse - Top & Bottom - Deck
S526	2	24'-10"	Transverse - Top & Bottom - Deck
S527	2	26'-0"	Transverse - Top & Bottom - Deck
S528	2	27'-2"	Transverse - Top & Bottom - Deck
S529	2	28'-4"	Transverse - Top & Bottom - Deck
S530	2	29'-6"	Transverse - Top & Bottom - Deck
S531	2	30'-8"	Transverse - Top & Bottom - Deck
S532	2	31'-10"	Transverse - Top & Bottom - Deck
S533	2	32'-7"	Transverse - Top & Bottom - Deck
S534	2	31'-9"	Transverse - Top & Bottom - Deck
S535	2	30'-11"	Transverse - Top & Bottom - Deck
S536	2	30'-1"	Transverse - Top & Bottom - Deck
S537	2	29'-4"	Transverse - Top & Bottom - Deck
S538	2	28'-6"	Transverse - Top & Bottom - Deck
S539	2	27'-8"	Transverse - Top & Bottom - Deck
S540	2	26'-10"	Transverse - Top & Bottom - Deck
S541	2	26'-1"	Transverse - Top & Bottom - Deck
S542	2	25'-3"	Transverse - Top & Bottom - Deck
S543	2	24'-5"	Transverse - Top & Bottom - Deck
S544	2	23'-8"	Transverse - Top & Bottom - Deck
S545	2	22'-10"	Transverse - Top & Bottom - Deck
S546	2	22'-0"	Transverse - Top & Bottom - Deck
S547	2	21'-3"	Transverse - Top & Bottom - Deck
S548	2	20'-5"	Transverse - Top & Bottom - Deck
S549	2	19'-8"	Transverse - Top & Bottom - Deck
S550	2	18'-10"	Transverse - Top & Bottom - Deck
S551	2	18'-1"	Transverse - Top & Bottom - Deck
S552	2	17'-3"	Transverse - Top & Bottom - Deck
S553	2	16'-6"	Transverse - Top & Bottom - Deck
S554	2	15'-8"	Transverse - Top & Bottom - Deck
S555	2	14'-11"	Transverse - Top & Bottom - Deck
S556	2	14'-1"	Transverse - Top & Bottom - Deck
S557	2	13'-4"	Transverse - Top & Bottom - Deck
S558	2	12'-7"	Transverse - Top & Bottom - Deck
S559	2	11'-9"	Transverse - Top & Bottom - Deck
S560	2	11'-0"	Transverse - Top & Bottom - Deck
S561	2	10'-3"	Transverse - Top & Bottom - Deck
S562	2	9'-5"	Transverse - Top & Bottom - Deck
S563	2	8'-8"	Transverse - Top & Bottom - Deck
S564	2	7'-11"	Transverse - Top & Bottom - Deck
S565	2	7'-1"	Transverse - Top & Bottom - Deck
S566	2	6'-4"	Transverse - Top & Bottom - Deck
S567	2	5'-7"	Transverse - Top & Bottom - Deck
S568	2	4'-10"	Transverse - Top & Bottom - Deck
S569	2	4'-0"	Transverse - Top & Bottom - Deck
S570	2	3'-3"	Transverse - Top & Bottom - Deck
S571	2	2'-6"	Transverse - Top & Bottom - Deck
S572	2	1'-9"	Transverse - Top & Bottom - Deck
S573	360	44'-9"	Longitudinal - Top & Bottom - Deck
S574E	24	44'-9"	Longitudinal - Brush Curb
S606	44	50'-0"	Longitudinal over Pier - Top - Deck

MARK	QTY.	LENGTH	LOCATION
			Approach Slab No. 2
BS506	14	33'-11"	Transverse - Bottom
BS606	69	15'-1"	Longitudinal - Bottom
			Pier
P606	56	24'-6"	Longitudinal - Top, Mid., Bot. - Footing
P607	84	11'-0"	Transverse - Top & Bottom - Footing
P608	2	9'-9"	Transverse - Top & Bottom - Footing
P609	2	7'-9"	Transverse - Top & Bottom - Footing
P610	2	5'-9"	Transverse - Top & Bottom - Footing
P611	2	3'-9"	Transverse - Top & Bottom - Footing
P612	2	1'-9"	Transverse - Top & Bottom - Footing
P706	46	20'-10"	Longitudinal - Each Face - Stem
P807	4	7'-0"	Vertical - Each Face - Stem
P808	89	10'-5"	Vertical - Each Face - Stem

BENT BARS

MARK	QTY.	LENGTH	TYPE	A	B	C	D	E	F	G	H	O	R	LOCATION
								Abutment No. 2 (Cont.)						
B862	3	10'-6"	JC	1'-4"	8'-3"	11"								Vertical - N.F. - Abut. (at Pile)
B863	3	10'-9"	JC	1'-4"	8'-6"	11"								Vertical - N.F. - Abut. (at Pile)
B864	6	11'-7"	C		10'-8"	11"								Vertical - Abut. Stem (at Piles)
B865	6	12'-2"	C		11'-3"	11"								Vertical - Abut. Stem (at Piles)
B866	3	12'-9"	C		11'-10"	11"								Vertical - Abut. Stem (at Piles)
								Superstructure						
S575	674	5'-9"	C	7"	5'-2"									Overhang - Deck
S576E	474	5'-9"	SC	10"	1'-5"	1'-3"	1'-5"			10"		1'-3¾"		Brush Curb
								Pier						
P556	20	5'-3"	T9		6"	4'-5"	6"							Stirrup - Stem
P557	20	5'-3"	T9		6"	4'-3"	6"							Stirrup - Stem
P558	19	5'-1"	T9		6"	4'-1"	6"							Stirrup - Stem
P559	19	4'-11"	T9		6"	3'-11"	6"							Stirrup - Stem
P560	19	4'-9"	T9		6"	3'-9"	6"							Stirrup - Stem
P561	11	4'-7"	T9		6"	3'-7"	6"							Stirrup - Stem
P650	102	4'-0"	U		1'-0"	2'-0"	1'-0"							Stirrup - Footing
P656	4	15'-6"	V				7'-9"	7'-9"			7'-9"			Top, Mid., Bot. - Footing (Nose)
P750	1	12'-10"	PA	3'-10"	2'-7"	3'-10"					1'-10"	3'-7¾"		Stirrup - Stem (Nose)
P751	1	12'-10"	PA	3'-9"	2'-8"	3'-9"					1'-10¾"	3'-9¼"		Stirrup - Stem (Nose)
P752	1	12'-11"	PA	3'-9"	2'-8½"	3'-9"					1'-11"	3'-10"		Stirrup - Stem (Nose)
P753	1	12'-10"	PA	3'-8"	2'-9"	3'-8"					1'-11½"	3'-11"		Stirrup - Stem (Nose)
P754	1	13'-0"	PA	3'-8"	2'-10"	3'-8"					2'-0"	4'-0"		Stirrup - Stem (Nose)
P755	1	13'-1"	PA	3'-8"	2'-10½"	3'-8"					2'-0½"	4'-0¾"		Stirrup - Stem (Nose)
P756	1	13'-2"	PA	3'-8"	2'-11"	3'-8"					2'-0¾"	4'-1½"		Stirrup - Stem (Nose)
P757	1	13'-2"	PA	3'-7"	3'-0"	3'-7"					2'-1½"	4'-3"		Stirrup - Stem (Nose)
P758	1	13'-4"	PA	3'-7"	3'-1"	3'-7"					2'-2¼"	4'-4¼"		Stirrup - Stem (Nose)
P759	1	13'-4"	PA	3'-7"	3'-1"	3'-7"					2'-2¼"	4'-4¾"		Stirrup - Stem (Nose)
P760	1	13'-4"	PA	3'-6"	3'-2"	3'-6"					2'-2¾"	4'-5¾"		Stirrup - Stem (Nose)
P761	1	10'-9"	U		3'-7"	3'-7"	3'-7"							Stirrup - Stem
P762	1	10'-10"	U		3'-7"	3'-8"	3'-7"							Stirrup - Stem
P763	1	10'-11"	U		3'-7"	3'-9"	3'-7"							Stirrup - Stem
P764	1	11'-0"	U		3'-7"	3'-10"	3'-7"							Stirrup - Stem
P765	1	11'-1"	U		3'-7"	3'-11"	3'-7"							Stirrup - Stem
P766	1	11'-2"	U		3'-7"	4'-0"	3'-7"							Stirrup - Stem
P767	1	11'-3"	U		3'-7"	4'-1"	3'-7"							Stirrup - Stem
P768	1	11'-4"	U		3'-7"	4'-2"	3'-7"							Stirrup - Stem
P769	1	11'-5"	U		3'-7"	4'-3"	3'-7"							Stirrup - Stem
P770	1	11'-6"	U		3'-7"	4'-4"	3'-7"							Stirrup - Stem
P771	1	11'-7"	U		3'-7"	4'-5"	3'-7"							Stirrup - Stem
P772	1	11'-8"	U		3'-7"	4'-6"	3'-7"							Stirrup - Stem
P806	93	7'-0"	J	1'-4"		5'-8"					2⅛"		6"	Vertical - Each Face - Stem

TYPE - BENDING DIAGRAMS

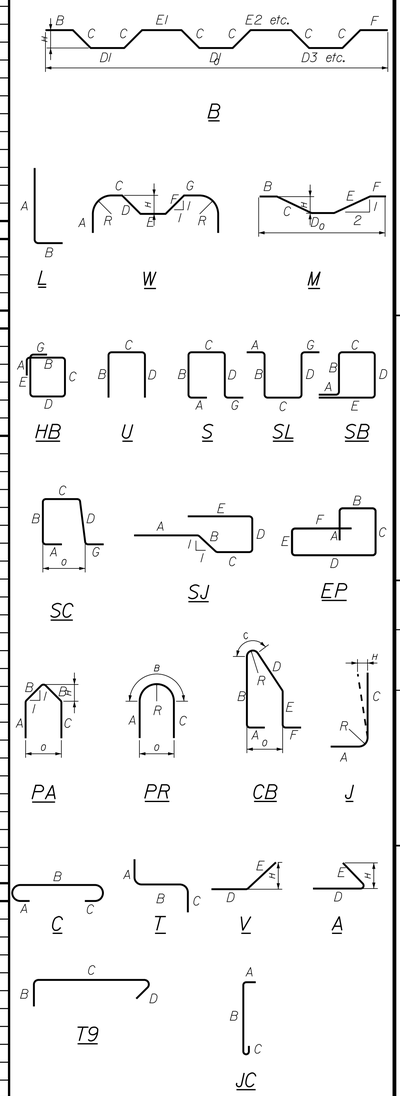

All dimensions are out-to-out of bar.

Bending details and hooks shall conform to the recommendations of the current revision of ACI Standard 315 and ACI Standard 318.

Reinforcing Bar: Plain - ASTM A615/A615M, Grade 60
Epoxy Coated - ASTM A775/A775M, Grade 60

GENERAL NOTES

1. The first two digits following the letter(s) of the mark indicate the size ofthe bar:

   Mark "A502" = bar size #5
   Mark "P805" = bar size #8
   Mark "S650" = bar size #6

2. Each crank bar, Type B, may be replaced by two (2) straight bars (one top and one bottom) of the same bar size as the crank bar. Payment in either case shall be based on crank bars as schedule on the plans.

3. Mark Legend:

   "E" = Epoxy Coated

STATE OF MAINE
DEPARTMENT OF TRANSPORTATION

STP-2047(600)

WIN 20476.00

BRIDGE PLANS

BRIDGE NO. 2807

Hoyle, Tanner & Associates, Inc.
www.hoyletanner.com

PROJ. MANAGER	M. P-ARLIN	BY	DATE
DESIGN-DETAILED	RSW	PBD	APR 2016
CHECKED-REVIEWED	JCR	AML	APR 2016
DESIGN2-DETAILED2	BKM	BKM	APR 2016
DESIGN3-DETAILED3			
REVISIONS 1			
REVISIONS 2			
REVISIONS 3			
REVISIONS 4			
FIELD CHANGES			

STIMSON BRIDGE
LITTLE OSSIPEE RIVER
WATERBORO-LIMERICK YORK COUNTY

REINFORCING STEEL SCHEDULE (2 OF 2)

SHEET NUMBER

39

OF 41

Filename: ...\BRIDGE\MSTA\039_Rebar_02.dgn Division: BRIDGE Username: common Date:4/19/2016

PLAN LEGEND

Town, County, State
Approx. Property Lines — P.L.
Existing Right of Way
Limits of Wrought Portion — L.O.W.P.
Control Of Access — C.O.A.
New Right of Way
New Easement
New Temporary Rights
New R/W Within Existing R/W

New R/W Along Existing R/W
Building — Clearing Limit Line — CLL
Trees — Conifer — Deciduous
Tree Line — Bush Line
Water Edge
Ledge — Rock/Boulder — Flag Pole
Fence — CHAIN LINK — BARB WIRE — STOCKADE
Sign — Well — WELL — Mailbox

	Existing	Proposed
Sanitary Sewer		
Telephone Line	T	T
Electric Line	E	E
Water Line	W	W
Underdrain Line		
Gas Line	G	G
Guardrail		
Culvert		

	Existing	Proposed
Traveled Way		
Ditch		
Catch Basin		
Manhole		
Sewer Manhole		
Utility Pole		
Fire Hydrant		
Curbing		

Cut Line — Fill Line
Stonewall — Retaining Wall
Baseline — 10+00 — 11+00 — 12+00
Monument — Traverse Point
Iron Rod Found — IRF — Pipe Found — IPF
Replacement Pin Set

STATE OF MAINE
REGISTRY OF DEEDS
COUNTY _____
RECEIVED _____, _____
at _____h_____m_____M and recorded in
Plan Book _____, Page _____
Attest: _____
REGISTER

THIS PLAN WAS PREPARED IN CONNECTION WITH THE DEPARTMENT'S ACQUISITION OF REAL PROPERTY FOR TRANSPORTATION PURPOSES. IT CANNOT BE USED TO ESTABLISH LEGAL BOUNDARIES BETWEEN ABUTTING PROPERTY OWNERS.

25 0 25 50 75 100
Scale of Feet

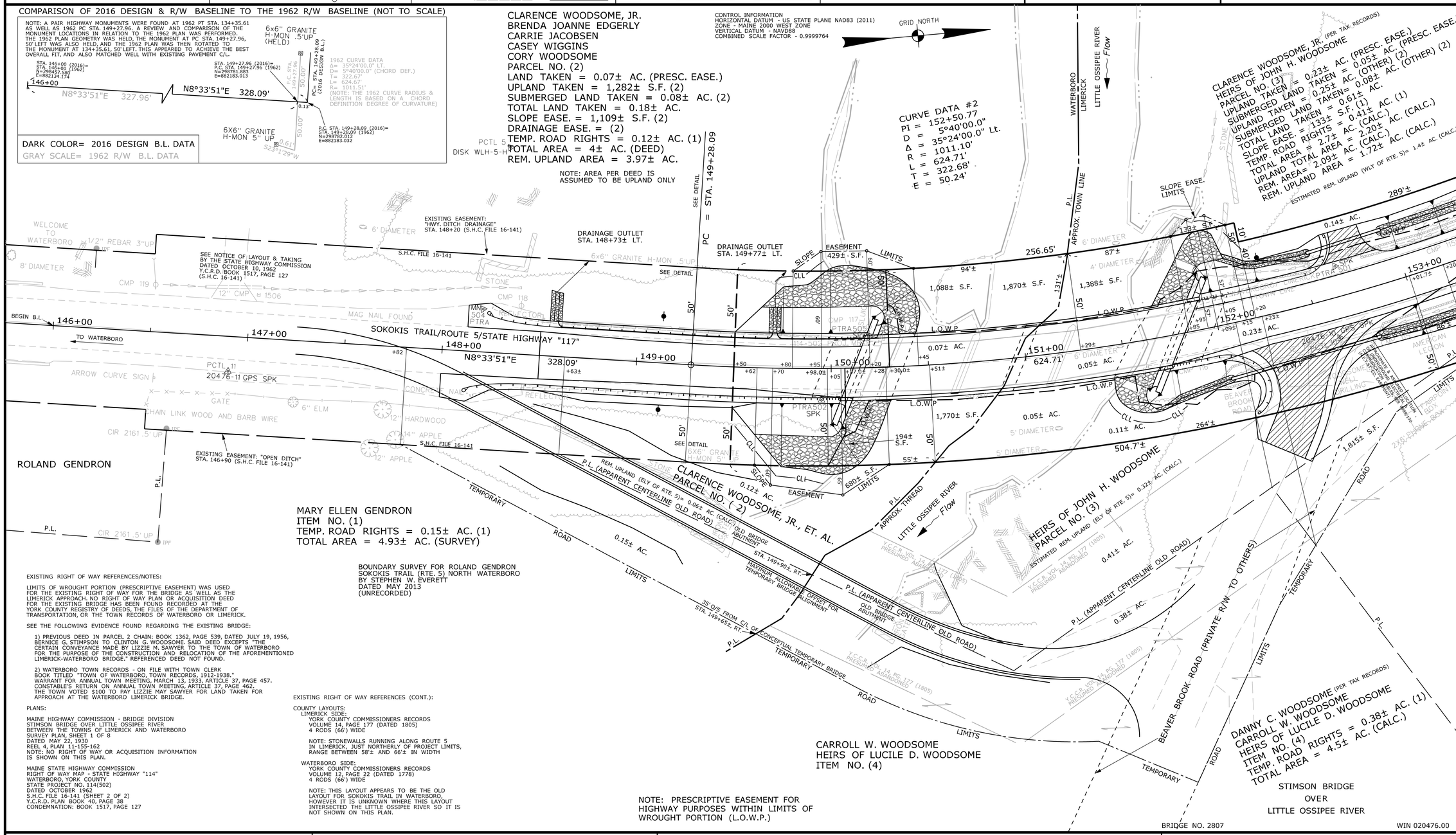

MARY ELLEN GENDRON
ITEM NO. (1)
TEMP. ROAD RIGHTS = 0.15± AC. (1)
TOTAL AREA = 4.93± AC. (SURVEY)

BOUNDARY SURVEY FOR ROLAND GENDRON
SOKOKIS TRAIL (RTE. 5) NORTH WATERBORO
BY STEPHEN W. EVERETT
DATED MAY 2013
(UNRECORDED)

EXISTING RIGHT OF WAY REFERENCES/NOTES:

LIMITS OF WROUGHT PORTION (PRESCRIPTIVE EASEMENT) WAS USED FOR THE EXISTING RIGHT OF WAY FOR THE BRIDGE AS WELL AS THE LIMERICK APPROACH. NO RIGHT OF WAY PLAN OR ACQUISITION DEED FOR THE EXISTING BRIDGE HAS BEEN FOUND RECORDED AT THE YORK COUNTY REGISTRY OF DEEDS, THE FILES OF THE DEPARTMENT OF TRANSPORTATION, OR THE TOWN RECORDS OF WATERBORO OR LIMERICK.

SEE THE FOLLOWING EVIDENCE FOUND REGARDING THE EXISTING BRIDGE:

1) PREVIOUS DEED IN PARCEL 2 CHAIN: BOOK 1362, PAGE 539, DATED JULY 19, 1956, BERNICE G. STIMPSON TO CLINTON G. WOODSOME. SAID DEED EXCEPTS "THE CERTAIN CONVEYANCE MADE BY LIZZIE M. SAWYER TO THE TOWN OF WATERBORO FOR THE PURPOSE OF THE CONSTRUCTION AND RELOCATION OF THE AFOREMENTIONED LIMERICK-WATERBORO BRIDGE." REFERENCED DEED NOT FOUND.

2) WATERBORO TOWN RECORDS - ON FILE WITH TOWN CLERK
BOOK TITLED "TOWN OF WATERBORO, TOWN RECORDS, 1912-1938."
WARRANT FOR ANNUAL TOWN MEETING, MARCH 13, 1933, ARTICLE 37, PAGE 457.
CONSTABLE'S RETURN ON ANNUAL TOWN MEETING, ARTICLE 37, PAGE 462.
THE TOWN VOTED $100 TO PAY LIZZIE MAY SAWYER FOR LAND TAKEN FOR APPROACH AT THE WATERBORO LIMERICK BRIDGE.

PLANS:

MAINE HIGHWAY COMMISSION - BRIDGE DIVISION
STIMSON BRIDGE OVER LITTLE OSSIPEE RIVER
BETWEEN THE TOWNS OF LIMERICK AND WATERBORO
SURVEY PLAN, SHEET 1 OF 8
DATED MAY 22, 1930
REEL 4, PLAN 11-155-162
NOTE: NO RIGHT OF WAY OR ACQUISITION INFORMATION IS SHOWN ON THIS PLAN.

MAINE STATE HIGHWAY COMMISSION
RIGHT OF WAY MAP - STATE HIGHWAY "114"
WATERBORO, YORK COUNTY
STATE PROJECT NO. 114(502)
DATED OCTOBER 1962
S.H.C. FILE 16-141 (SHEET 2 OF 2)
Y.C.R.D. PLAN BOOK 40, PAGE 38
CONDEMNATION: BOOK 1517, PAGE 127

EXISTING RIGHT OF WAY REFERENCES (CONT.):

COUNTY LAYOUTS:
LIMERICK SIDE:
YORK COUNTY COMMISSIONERS RECORDS
VOLUME 14, PAGE 177 (DATED 1805)
4 RODS (66') WIDE

NOTE: STONEWALLS RUNNING ALONG ROUTE 5 IN LIMERICK, JUST NORTHERLY OF PROJECT LIMITS, RANGE BETWEEN 58'± AND 66'± IN WIDTH

WATERBORO SIDE:
YORK COUNTY COMMISSIONERS RECORDS
VOLUME 12, PAGE 22 (DATED 1778)
4 RODS (66') WIDE

NOTE: THIS LAYOUT APPEARS TO BE THE OLD LAYOUT FOR SOKOKIS TRAIL IN WATERBORO, HOWEVER IT IS UNKNOWN WHERE THIS LAYOUT INTERSECTED THE LITTLE OSSIPEE RIVER SO IT IS NOT SHOWN ON THIS PLAN.

NOTE: PRESCRIPTIVE EASEMENT FOR HIGHWAY PURPOSES WITHIN LIMITS OF WROUGHT PORTION (L.O.W.P.)

ITEM	CHECKED	TECH
EXISTING CONDITION PLAN	C.W.K.	N.T.A.
FINAL RIGHT OF WAY	G.L.L.	N.T.A.
AREAS	G.L.L.	N.T.A.

STATE OF MAINE
DEPARTMENT OF TRANSPORTATION
16 STATE HOUSE STATION - AUGUSTA, ME 04333-0016 - 207-624-3460

WATERBORO-LIMERICK
RIGHT OF WAY MAP

REVISIONS

NO.	DATE	DESCRIPTION	BY

PLAN FILED IN PLAN BOOK PAGE COUNTY RECORD

NO.	GRANTOR	INSTRUMENT	DATE	BOOK	PAGE

DAVID BERNHARDT
COMMISSIONER
JOYCE NOEL TAYLOR
CHIEF ENGINEER
DATE

To the best of my knowledge and belief the Highway Right of Way lines depicted hereon are based upon a survey conforming to the Standards of Practice promulgated by the Maine Board of Licensure for Professional Land Surveyors 02-360 CMR, Chapter 90; Exceptions: (1) No separate survey report, (2) Monumentation only as shown on plan. See sheet X of this plan set for coordinates. (3) Other boundary lines, including lines between abutters are approximate and for general reference purposes only.

STATE HIGHWAY "117"
ROUTE 5 / SOKOKIS TRAIL
WATERBORO-LIMERICK YORK COUNTY
FEDERAL AID PROJECT NO. STP-2047(600)

FEBRUARY 2016 | RIGHT-OF-WAY MAP | D.O.T. FILE NO.16-510
SCALE 1" = 25' | SHEET 1 OF 2

SHEET NUMBER
1
OF _

Filename: ...\00\ROW\MSTA\001_RWPLAN1.dgn Division: ROW Username: Nicholos.Acheson Date:3/14/2016

PLAN LEGEND

Town, County, State	New R/W Along Existing R/W	Existing / Proposed: Sanitary Sewer, Telephone Line, Electric Line, Water Line, Underdrain Line, Gas Line, Guardrail, Culvert	Existing / Proposed: Traveled Way, Ditch, Catch Basin, Manhole, Sewer Manhole, Utility Pole, Fire Hydrant, Curbing	Cut Line, Fill Line, Stonewall, Retaining Wall, Baseline (10+00, 11+00, 12+00), Monument, Traverse Point, Iron Rod Found (IRF), Pipe Found (IPF), Replacement Pin Set
Approx. Property Lines — P.L.	Building, Clearing Limit Line — CLL			
Existing Right of Way	Trees: Conifer, Deciduous			
Limits of Wrought Portion — L.O.W.P.	Tree Line, Bush Line			
Control Of Access — C.O.A.	Water Edge			
New Right of Way	Ledge, Rock/Boulder, Flag Pole			
New Easement	Fence: CHAIN LINK, BARB WIRE, STOCKADE			
New Temporary Rights				
New R/W Within Existing R/W	Sign, Well (WELL), Mailbox			

STATE OF MAINE
REGISTRY OF DEEDS
COUNTY _____
RECEIVED _____, _____
at _____h_____m_____M and recorded in
Plan Book _____, Page _____
Attest: _____
REGISTER

THIS PLAN WAS PREPARED IN CONNECTION WITH THE DEPARTMENT'S ACQUISITION OF REAL PROPERTY FOR TRANSPORTATION PURPOSES. IT CANNOT BE USED TO ESTABLISH LEGAL BOUNDARIES BETWEEN ABUTTING PROPERTY OWNERS.

25 0 25 50 75 100
Scale of Feet

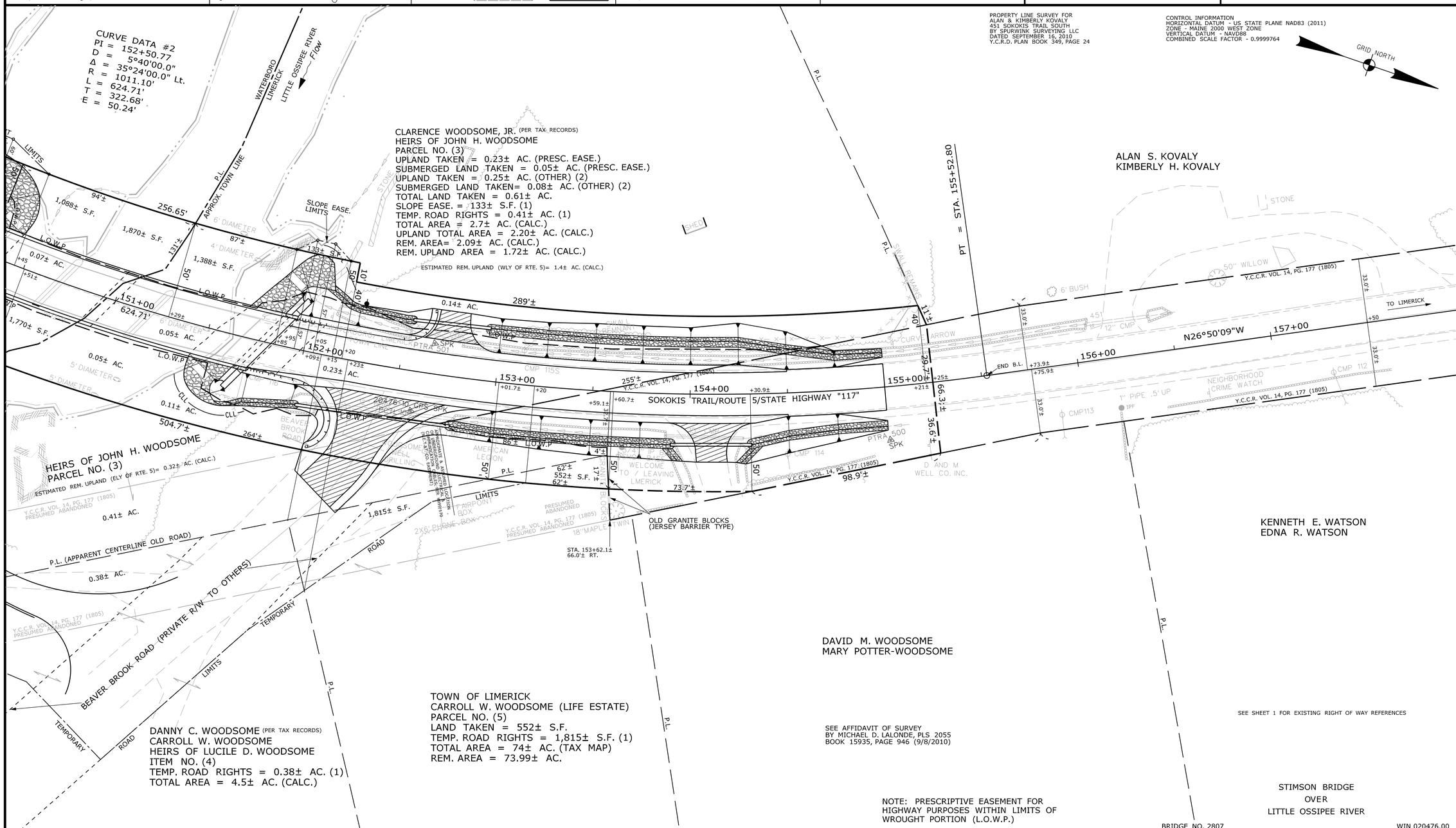

ITEM	TECH	CHECKED
EXISTING CONDITION PLAN	N.T.A.	C.W.K.
FINAL RIGHT OF WAY	N.T.A.	G.L.L.
AREAS	N.T.A.	G.L.L.

STATE OF MAINE
DEPARTMENT OF TRANSPORTATION
16 STATE HOUSE STATION - AUGUSTA, ME 04333-0016 - 207-624-3460
WATERBORO-LIMERICK
RIGHT OF WAY MAP

REVISIONS

NO.	DATE	DESCRIPTION	BY

PLAN FILED IN PLAN BOOK	PAGE	COUNTY RECORD			
NO.	GRANTOR	INSTRUMENT	DATE	BOOK	PAGE

DAVID BERNHARDT
COMMISSIONER
JOYCE NOEL TAYLOR
CHIEF ENGINEER
DATE

To the best of my knowledge and belief the Highway Right of Way lines depicted hereon are based upon a survey conforming to the Standards of Practice promulgated by the Maine Board of Licensure for Professional Land Surveyors 02-360 CMR, Chapter 90; Exceptions: (1) No separate survey report, (2) Monumentation only as shown on plan. See sheet X of this plan set for coordinates. (3) Other boundary lines, including lines between abutters are approximate and for general reference purposes only.

STATE HIGHWAY "117"
ROUTE 5 / SOKOKIS TRAIL
WATERBORO-LIMERICK YORK COUNTY
FEDERAL AID PROJECT NO. STP-2047(600)

FEBRUARY 2016 | RIGHT-OF-WAY MAP | D.O.T. FILE NO.16-510
SCALE 1" = 25' | SHEET 2 OF 2

SHEET NUMBER
2
OF _

Filename: ...\00\ROW\MSTA\002_RWPLAN2.dgn Division: ROW Username: Nicholas.Acheson Date:3/14/2016