STATE OF MAINE
DEPARTMENT OF TRANSPORTATION

SPECIFICATIONS

Design: Load and Resistance Factor Design per AASHTO LRFD Bridge Design Specifications, Seventh Edition 2014 with 2015 Interim Revisions.

DESIGN LOADING

Live Load ..... HL - 93 Modified for Strength I

TRAFFIC DATA

Current (2014) AADT	1800
Future (2034) AADT	2340
DHV - % of AADT	12
Design Hour Volume	281
Heavy Trucks (% of AADT)	7
Heavy Trucks (% of DHV)	5
Directional Distribution (% of DHV)	65
18 kip Equivalent P 2.0	51
18 kip Equivalent P 2.5	49
Design Speed (mph)	30

HYDROLOGIC DATA

Drainage Area	16.0 sq mi
Design Discharge (Q50)	850 cfs
Check Discharge (Q100)	975 cfs
Headwater Elevation (Q1.1)	265.13 ft
Headwater Elevation (Q25)	266.91 ft
Headwater Elevation (Q50)	267.01 ft
Headwater Elevation (Q100)	267.11 ft

MATERIALS

Concrete:	
Curbs & Transition Barriers	Class "LP"
Precast NEXT Beams	Class "P"
All Other	Class "A"
Reinforcing:	
Plain Reinforcing Steel	ASTM A 615/A 615M, Grade 60
Stainless Reinforcing Steel	ASTM A 955, Grade 60
Glass Fiber Reinforced Polymer (GFRP)	CSA S807-10, ACI 440.1R-15
Prestressing Strands	AASHTO M 203 (ASTM A 416), Grade 270, Low Relaxation
Spun Pipe Piles	API 5CT N80 or ASTM A 252, Grade 3

BASIC DESIGN STRESSES

Cast - In - Place Concrete	f 'c = 4000 psi
Precast Concrete:	
Abutments & Approach Slabs	f 'c = 4000 psi
Prestressed NEXT Beams	f 'c = 8000 psi
	f 'ci = 6400 psi
Plain & Stainless Reinforcing Steel	f y = 60,000 psi
Glass Fiber Reinforced Polymer:	
#5 Bar	F μ = 95,000 psi
#6 Bar	F μ = 90,000 psi
#7 Bar	F μ = 85,000 psi
#8 Bar	F μ = 80,000 psi
Minimum Elastic Modulus	5,700,000 psi
Prestressing Strand	F μ = 270,000 psi
Spun Pipe Piles	Fy = 80,000 psi

NAPLES
CUMBERLAND COUNTY
CROCKETT BRIDGE
OVER
MUDDY RIVER
STATE ROUTES 11 / 114
PROJECT NO. STP-2046(600)
PROJECT LENGTH 0.114 mi.
BRIDGE NO. 2199

LIST OF DRAWINGS

Title Sheet	1
Estimated Quantities	2
General Construction Notes	3
General Plan	4
Profile	5
Boring Location Plan	6
Interpretive Subsurface Profile	7
Boring Logs	8 - 9
Typical Sections	10
Highway Cross Sections	11 - 25
Precast Abutments	26 - 29
Abutments	30 - 32
Precast NEXT Beams	33 - 34
Superstructure	35 - 37
End Diaphragm	38
Longitudinal Section	39
Reinforcing Schedule	40
Detour Plan	41 - 42
Right of Way Map	43 - 44

UTILITIES

Central Maine Power Company
Fairpoint Communications
Time Warner Cable

MAINTENANCE OF TRAFFIC

Bridge closure with a detour on U.S. Route 302, Route 117 / Sandy Creek Road, Route 117, Route 107, and Long Hill Road

PROJECT LOCATION	In Naples, on State Routes 11 & 114 (Sebago Road) over Muddy River, 3.9 miles south of U. S. Route 302 and 1.0 mile north of the Sebago town line. Lat./Long. 43°55'36.0" N 70°36'52.3" W
PROGRAM AREA	Highway Bridges - Traditional
OUTLINE OF WORK	Bridge Replacement

STATE OF MAINE
DEPARTMENT OF TRANSPORTATION

APPROVED — DATE 4/7/16
COMMISSIONER: [signature]
CHIEF ENGINEER: [signature] — DATE 4-5-16

STATE OF MAINE — GARRETT GUSTAFSON 13553 — LICENSED PROFESSIONAL ENGINEER
SIGNATURE [signature] — P.E. NUMBER 13553 — DATE 4-5-16

PROJECT INFORMATION		DATE
PROGRAM	BRIDGE PROGRAM	
PROJECT MANAGER	MARK PARLIN	
DESIGNER	GARRETT GUSTAFSON	
CONSULTANT	N/A	
PROJECT RESIDENT		
CONTRACTOR		
PROJECT COMPLETION DATE		

NAPLES
CROCKETT BRIDGE

TITLE SHEET

WIN 20466.00

STP-2046(600)

SHEET NUMBER
1
OF 44

Filename:\00\BRIDGE\MSTA\001_Title.dgn Division: BRIDGE Username: dana.damren Date:4/4/2016

Filename: ...\bridge\msto\002_Estimate.dgn Division: BRIDGE Username: dono.damren Date:4/4/2016

ESTIMATED QUANTITIES

ITEM NO.	DESCRIPTION	QUANTITY	UNIT
201.23	REMOVING SINGLE TREE TOP ONLY	2	EA
201.24	REMOVING STUMP	2	EA
202.19	REMOVING EXISTING BRIDGE (600 CY GRANULAR BACKFILL) (215 CY CONCRETE)	1	LS
202.20	REMOVING BITUMINOUS CONCRETE PAVEMENT	200	SY
203.20	COMMON EXCAVATION	3100	CY
203.21	ROCK EXCAVATION	160	CY
203.211	PRESPLITTING ROCK	125	LF
203.24	COMMON BORROW	10	CY
203.25	GRANULAR BORROW	450	CY
206.082	STRUCTURAL EARTH EXCAVATION - MAJOR STRUCTURES	530	CY
304.10	AGGREGATE SUBBASE COURSE - GRAVEL	1510	CY
403.2081	12.5 MM POLYMER MODIFIED HMA SURFACE	155	T
403.210	HOT MIX ASPHALT, 9.5 MM MAXIMUM SIZE	32	T
403.211	HOT MIX ASPHALT (SHIMMING)	5	T
403.2131	12.5 MM POLYMER MODIFIED HMA BASE	260	T
409.15	BITUMINOUS TACK COAT - APPLIED	60	G
501.221	SPUN PIPE PILE	315	LF
501.805	DRILLING EQUIPMENT MOBILIZATION - SPUN PIPE PILES	1	LS
502.219	STRUCTURAL CONCRETE, ABUTMENTS AND RETAINING WALLS (CAST IN PLACE) (12 CY)	1	LS
502.261	STRUCTURAL CONCRETE ROADWAY AND SIDEWALK SLABS ON CONCRETE BRIDGES (95 CY)	1	LS
502.291	SAW CUT GROOVING (2324 SF)	1	LS
502.49	STRUCTURAL CONCRETE CURBS AND SIDEWALKS (8 CY)	1	LS
503.12	REINFORCING STEEL, FABRICATED AND DELIVERED	940	LB
503.13	REINFORCING STEEL, PLACING	940	LB
503.26	STAINLESS STEEL REINFORCEMENT - FABRICATED & DELIVERED	7640	LB
503.27	STAINLESS STEEL REINFORCEMENT - PLACING	7640	LB
507.0821	STEEL BRIDGE RAILING, 3 BAR (145 LF)	1	LS
514.06	CURING BOX FOR CONCRETE CYLINDERS	1	EA
515.21	PROTECTIVE COATING FOR CONCRETE SURFACES (370 SY)	1	LS
523.52	BEARING INSTALLATION	16	EA
523.5403	PLAIN ELASTOMERIC BEARINGS	16	EA
526.301	TEMPORARY CONCRETE BARRIER TYPE 1 (100 LF)	1	LS
526.34	PERMANENT CONCRETE TRANSITION BARRIER	4	EA
530.30	GLASS FIBER REINFORCED POLYMER, FABRICATED AND DELIVERED	19,000	LF
530.31	GLASS FIBER REINFORCED POLYMER, PLACING	19,000	LF
534.76	PRECAST ABUTMENT (81 CY)	1	LS
534.7601	PRECAST APPROACH SLAB (21 CY)	1	LS
535.622	PRESTRESSED STRUCTURAL CONCRETE NEXT BEAM (107 CY)	1	LS
601.221	GABIONS - PVC COATED & HAND FILLED	45	CY
606.1721	BRIDGE TRANSITION - TYPE 1	4	EA
606.23	GUARDRAIL TYPE 3C - SINGLE RAIL	425	LF
606.231	GUARDRAIL TYPE 3C - 15 FOOT RADIUS AND LESS	25	LF
606.232	GUARDRAIL TYPE 3C - OVER 15 FOOT RADIUS	12.5	LF
606.265	TERMINAL END - SINGLE RAIL - GALVANIZED STEEL	2	EA
606.353	REFLECTORIZED FLEXIBLE GUARDRAIL MARKER	8	EA
606.79	GUARDRAIL 350 FLARED TERMINAL	2	EA
610.08	PLAIN RIPRAP	1200	CY
610.18	STONE DITCH PROTECTION	150	CY
613.319	EROSION CONTROL BLANKET	80	SY
615.07	LOAM	60	CY
618.14	SEEDING METHOD NUMBER 2	6	UN
618.141	SEEDING METHOD NUMBER 3	9	UN
619.1201	MULCH	9	UN
619.1401	EROSION CONTROL MIX	185	CY
620.58	EROSION CONTROL GEOTEXTILE	1500	SY
620.661	DRAINAGE GEOCOMPOSITE	75	SY
627.733	4" WHITE OR YELLOW PAINTED PAVEMENT MARKING LINE	2100	LF

ESTIMATED QUANTITIES

ITEM NO.	DESCRIPTION	QUANTITY	UNIT
629.05	HAND LABOR, STRAIGHT TIME	20	HR
631.12	ALL PURPOSE EXCAVATOR (INCLUDING OPERATOR)	10	HR
631.14	GRADER (INCLUDING OPERATOR)	10	HR
631.15	ROLLER, EARTH AND BASE COURSE (INCLUDING OPERATOR)	10	HR
631.172	TRUCK - LARGE (INCLUDING OPERATOR)	10	HR
631.22	FRONT END LOADER (INCLUDING OPERATOR)	10	HR
637.071	DUST CONTROL	1	LS
639.18	FIELD OFFICE TYPE A	1	EA
645.103	DEMOUNT GUIDE SIGN	2	EA
645.106	DEMOUNT REGULATORY, WARNING, CONFIRMATION AND ROUTE MARKER ASSEMBLY SIGN	3	EA
645.113	REINSTALL GUIDE SIGN	2	EA
645.116	REINSTALL REGULATORY, WARNING, CONFIRMATION AND ROUTE MARKER ASSEMBLY SIGN	1	EA
652.312	TYPE III BARRICADE	4	EA
652.33	DRUM	10	EA
652.34	CONE	10	EA
652.35	CONSTRUCTION SIGNS	912	SF
652.361	MAINTENANCE OF TRAFFIC CONTROL DEVICES (50 CD)	1	LS
652.38	FLAGGER	100	HR
652.41	PORTABLE CHANGEABLE MESSAGE SIGN	5	EA
656.75	TEMPORARY SOIL EROSION AND WATER POLLUTION CONTROL	1	LS
659.10	MOBILIZATION	1	LS

STATE OF MAINE
DEPARTMENT OF TRANSPORTATION

STP-2046(600)

WIN 20466.00

BRIDGE PLANS

BRIDGE NO. 2199

SIGNATURE

P.E. NUMBER

DATE

	M. Parlin	G. Gustafson					
BY	D. Damren	-----	-----	-----	-----	-----	-----
DATE	Mar. 2016	-----	-----	-----	-----	-----	-----
PROJ. MANAGER							
DESIGN-DETAILED							
CHECKED-REVIEWED							
DESIGN2-DETAILED2							
DESIGN3-DETAILED3							
REVISIONS 1							
REVISIONS 2							
REVISIONS 3							
REVISIONS 4							
FIELD CHANGES							

CROCKETT BRIDGE
MUDDY RIVER
NAPLES CUMBERLAND COUNTY

ESTIMATED QUANTITIES

SHEET NUMBER

2

OF 44

Filename: ...\003_General Construction Notes.dgn Division: BRIDGE Username: dana.damren Date:4/4/2016

GENERAL CONSTRUCTION NOTES

1. During construction, the road will be closed to traffic for a time period specified in the Special Provisions.

2. For easements, construction limits and right of way lines, refer to Right of Way Map.

3. The clearing limits as shown on the plans are approximate. The exact limits will be established in the field by the Resident. Payment for clearing will be considered incidental to Contract items.

4. All utility facilities shall be adjusted by the respective utilities unless otherwise noted.

5. Do not excavate for Aggregate Subbase Course where existing material is suitable as determined by the Resident.

6. In areas where the Resident directs the Contractor not to excavate to the subgrade line shown on the plans, payment for removing existing pavement, grubbing, shaping, ditching, and compacting the existing subbase and layers of new subbase 6 inches or less thick will be made under appropriate equipment rental items.

7. All embankment material, except as otherwise shown, placed below EL. 273.0 at Abutment No. 1 and EL. 276.5 at Abutment No. 2 shall be Granular Borrow meeting the requirements of Subsection 703.19, Material for Underwater Backfill.

8. From Sta. 114+25 to Sta. 115+00, place riprap sideslopes up to EL. 270.0. From Sta. 115+00 to Sta. 116+60, place riprap sideslopes up to EL. 273.0. From Sta. 112+70 to Sta. 114+75, place 2 feet thick riprap layer up to 2 feet from the berm line as shown on the Cross Sections sheets and in accordance with the Standard Details.

9. Construct the riprap shelf at each abutment at the elevations shown on the Profile.

10. Place loam 2 inches deep on all new or reconstructed sideslopes or as directed by the Resident.

11. Erosion Control Mix may be substituted in those areas normally receiving loam and seed as directed by the Resident. Placement shall be in accordance with Standard Specifications Section 619, Mulch. Payment will be made under Item No. 619.1401, Erosion Control Mix.

13. Place a 24-in. wide strip of Temporary Erosion Control Blanket on the sideslopes along the top of the riprap and behind the wingwalls.

14. An NCHRP350 compliant guardrail end treatment shall be installed concurrently with the placement of each section of beam guardrail.

15. Extended-use Erosion Control Blanket, seeded gutters, riprap downspouts, and other gutters lined with Stone Ditch Protection shall be constructed after paving and shoulder work is completed, where it is apparent that runoff will cause continual erosion. Payment will be made under the appropriate Contract items.

16. Protective Coating for Concrete Surfaces shall be applied to the following areas:

All exposed surfaces of concrete curbs.
Fascias down to the drip notch.
All exposed surfaces of Concrete Transition Barriers.
Concrete wearing surface.
Back face of abutments to one foot below the roadway surface.

17. Project information referred to below may be accessed at the following MaineDOT web address: http://www.maine.gov/mdot/contractors/.

18. The existing bridge plans may be accessed at the MaineDOT web address. The plans are reproductions of the original drawings as prepared for the construction of the bridge. It is very unlikely that the plans will show any construction field changes or any alterations which may have been made to the bridge during its life span.

19. The hydrologic report of the bridge site may be accessed at the MaineDOT web address. The hydrologic report is based on MaineDOT's interpretation of the information obtained for the subject site. No assurance is given that the information or the conclusions of the report will be representative of actual conditions at the time of construction.

20. The project geotechnical report titled: Geotechnical Design Report, Crockett Bridge No. 2199 over the Muddy River, MaineDot WIN 20466.00, Naples, Maine, dated March 23, 2016, may be accessed at the MaineDOT web address.

21. Geotechnical information furnished or referred to in this plan set is for the use of the Bidders and the Contractor. No assurance is given that the information or interpretations will be representative of actual subsurface conditions at the construction site. MaineDOT will not be responsible for the Bidders' or Contractor's interpretations of, or conclusions drawn from, the geotechnical information. The boring logs contained in the plan set present factual and interpretive subsurface information collected at discrete locations. Data provided may not be representative of the subsurface conditions between the boring locations.

22. Quantities included for pay items measured and paid for by Lump Sum are estimated quantities and are provided by MaineDOT for informational purposes only. Lump Sum pay items will be paid for at the Contract Bid amount, with no addition or reduction in payment to the Contractor if the actual final quantities are different from the MaineDOT provided estimated quantities, except as follows:

a. If a Lump Sum pay item is eliminated, the requirements of Standard Specifications Section 109.2, Elimination of Items, will take precedence.

b. If other Contract Documents specifically allow a change in payment for a Lump Sum pay item, those requirements will be followed.

c. If a design change results in changes to estimated quantities for Lump Sum pay items, price adjustments will be made in accordance with Standard Specifications Section 109.7, Equitable Adjustments to Compensation.

23. All costs for cofferdams, including pumping, maintenance, related temporary soil erosion and water pollution controls and removal, will not be paid for directly, but will be considered incidental to related Contract items.

24. The Contractor shall submit a Bridge Demolition Plan to the Resident at least 10 business days prior to the start of demolition work. The plan shall outline the methods and equipment to be used to remove and dispose of all materials included in the existing bridge. No work related to the removal of the bridge shall be undertaken by the Contractor until MaineDOT has reviewed the Bridge Demolition Plan for appropriateness and completeness. Payment for all work necessary for developing, submitting and finalizing the Demolition Plan will be considered incidental to the bridge removal pay item.

25. The existing bridge shall be removed by and become the property of the Contractor. Remove the existing bridge a minimum of 4 feet below the final grade in areas of new riprap including at the toe of slope, a minimum of 1 foot below the existing grade in all other areas, and as directed by the Resident. Payment for excavation of material retained by the existing structure will be included under Item No. 202.19, Removing Existing Bridge, in accordance with Standard Specifications Section 202. No separate payment will be made.

26. Payment for installation and removal of any temporary structures necessary to complete the removal of the existing bridge, including, but not limited to, cofferdams or other falsework, is included under Item No. 202.19, Removing Existing Bridge. No separate payment will be made.

27. Payment for removal of the four Type 3 Object Markers (Chevrons) at each corner of the existing bridge is included under Item No. 202.19, Removing Existing Bridge. No separate payment will be made.

28. The existing hidden drive / pedestrian warning sign located approximately at Sta. 112+95, 22 feet left, shall be removed and reinstalled as directed by the Resident. Payment for removal will be made under Item No. 645.106, Demount Regulatory, Warning, Confirmation and Route Marker Assembly Sign and payment for reinstallation will be made under Item No. 645.116 Reinstall Regulatory, Warning, Confirmation and Route Marker Assembly Sign.

29. The two existing narrow bridge signs, one on each approach, shall be removed after the bridge closure period and any scheduled alternating one-way traffic. Payment will be made under Item No. 645.106, Demount Regulatory, Warning, Confirmation and Route Marker Assembly Sign.

30. The two existing milfoil signs, one on each bridge fascia, shall be removed and reinstalled as directed by the Resident. Payment for removal will be made under Item No. 645.103, Demount Guide Sign and payment for reinstallation will be made under Item No. 645.113 Reinstall Guide Sign.

31. Install two layers of 6 mil polyethylene sheeting under approach slabs. Payment will be included under Item No. 534.7601, Precast Approach Slab. No separate payment will be made.

32. These Plans were developed with an assumed Final Camber of 2 inches. Dimensions and elevations shall be adjusted in accordance with Special Provision Section 535, Precast, Prestressed Concrete Superstructure - Camber.

33. The Bridge Transition at Abutment No. 2 right side shall be constructed on a 20-ft. radius. Payment will be made under Item No. 606.1721, Bridge Transition - Type 1.

ANCHORED GABION NOTES

1. Gabions shall meet the requirements of Standard Specifications Section 601 and Special Provisions Section 601 - Gabions, Galvanized and PVC Coated.

2. Anchored gabions shall be galvanized and PVC coated.

3. The bearing surface of the gabion shall be at a slope of 4H:1V or flatter. Where the bedrock surface slope exceeds 4H:1V, the bedrock surface shall be benched in a level step or made less steep than 4H:1V. Alternatively, concrete fill may be used to create a bearing surface less steep than 4H:1V. Gabion surface preparation costs will be considered incidental to the gabion pay item.

4. Gabions shall be anchored with #8 ASTM A 615, Grade 75, all - thread galvanized reinforcing bars. See "Dowel Notes" for installation instructions.

5. The maximum dowel spacing shall be 3'-0" along the length of the wall, with a minimum of 2 dowels installed per gabion.

6. Bearing plates shall meet the requirements of ASTM A 709/A 709M, Grade 50.

7. Bearing plates shall be galvanized in accordance with Standard Specifications Section 506. All - thread rebar, washers and nuts shall be galvanized to ASTM A 153 or ASTM B 695, Class 50, Type 1. Payment for galvanizing will be considered incidental to the gabion pay item.

8. Install hex nuts hand tight and upset anchor rod threads after tightening.

DOWEL NOTES

1. The method of installing dowels shall be approved by the Resident.

2. Holes drilled for the dowels shall be a minimum of 2½ inches in diameter.

3. Minimum embedment depth into bedrock for the dowels shall be 2'-0"

4. The anchoring material shall be one of the products shown on the MaineDOT list of prequalified grout materials for keyways and anchoring. Installation shall be in conformance with the manufacturer's recommendations. The anchoring material chosen shall be submitted to the Resident for approval.

5. Grout for the dowels shall contain an approved non - shrink additive, with a maximum water / cement ratio of 0.45 by weight and a minimum unconfined compressive strength of 4.0 KSI at the time of testing.

STATE OF MAINE
DEPARTMENT OF TRANSPORTATION

STP-2046(600)

WIN 20466.00

BRIDGE NO. 2199

BRIDGE PLANS

PROJ. MANAGER	M. Parlin	BY	DATE
DESIGN-DETAILED	G. Gustafson	D. Damren	Mar. 2016
CHECKED-REVIEWED	-----	-----	-----
DESIGN2-DETAILED2	-----	-----	-----
DESIGN3-DETAILED3	-----	-----	-----
REVISIONS 1	-----	-----	-----
REVISIONS 2	-----	-----	-----
REVISIONS 3	-----	-----	-----
REVISIONS 4	-----	-----	-----
FIELD CHANGES	-----	-----	-----

SIGNATURE

P.E. NUMBER

DATE

CROCKETT BRIDGE
MUDDY RIVER
NAPLES CUMBERLAND COUNTY

GENERAL CONSTRUCTION NOTES

SHEET NUMBER

3

OF 44

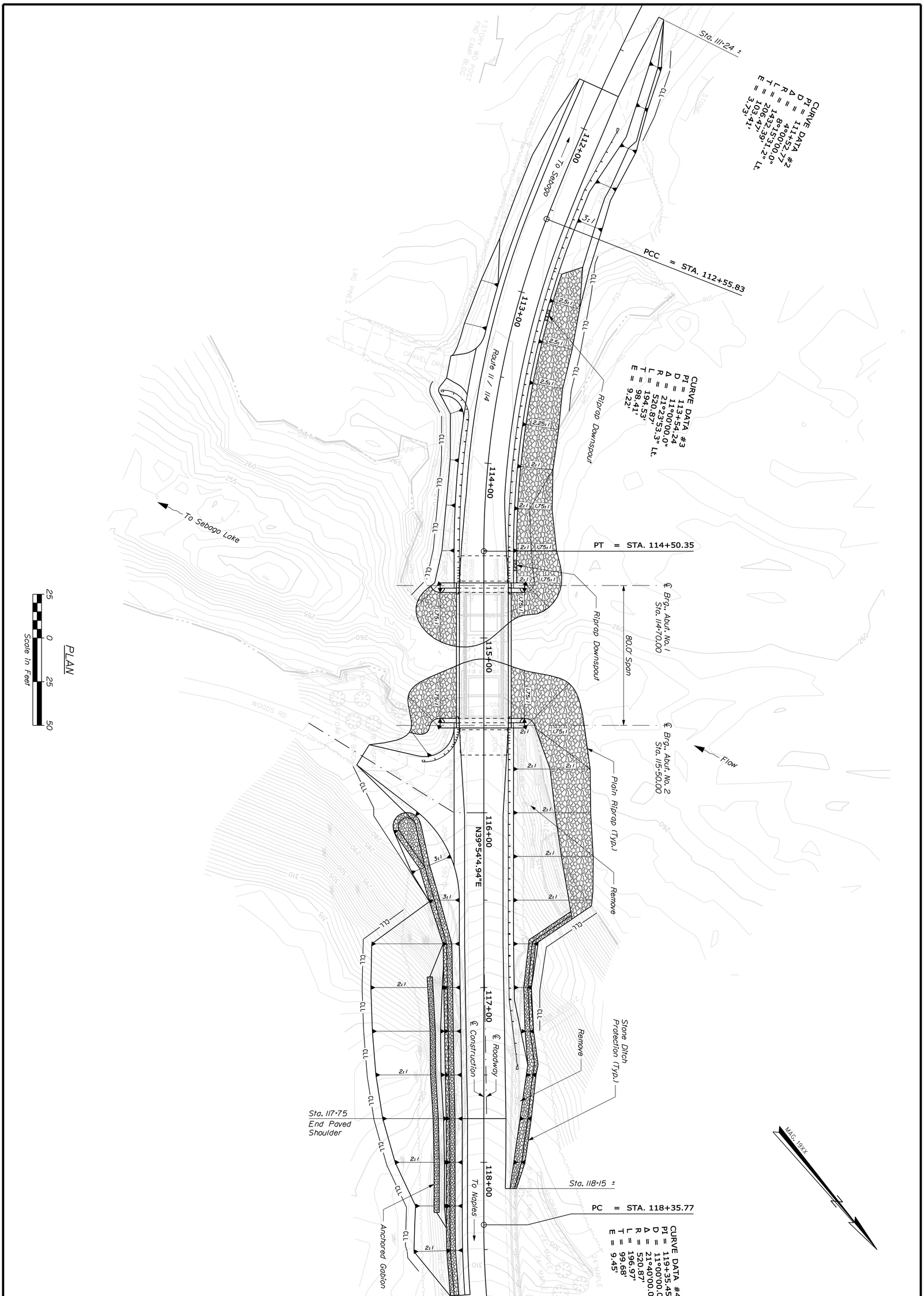

CROCKETT BRIDGE
MUDDY RIVER
NAPLES CUMBERLAND COUNTY

GENERAL PLAN

PROJ. MANAGER	M. Parlin	BY	DATE
DESIGN-DETAILED	G. Gustafson	D. Damren	Mar. 2016
CHECKED-REVIEWED	_____	_____	_____
DESIGN2-DETAILED2	_____	_____	_____
DESIGN3-DETAILED3	_____	_____	_____
REVISIONS 1	_____		_____
REVISIONS 2	_____		_____
REVISIONS 3	_____		_____
REVISIONS 4	_____		_____
FIELD CHANGES	_____		_____

SIGNATURE

P.E. NUMBER

DATE

STATE OF MAINE
DEPARTMENT OF TRANSPORTATION

STP-2046(600)

BRIDGE NO. 2199 WIN 20466.00 BRIDGE PLANS

SHEET NUMBER 4 OF 44

Filename: ...\bridge\rmsto\005_ Profile.dgn Division: BRIDGE Username: dana.damren Date:4/4/2016

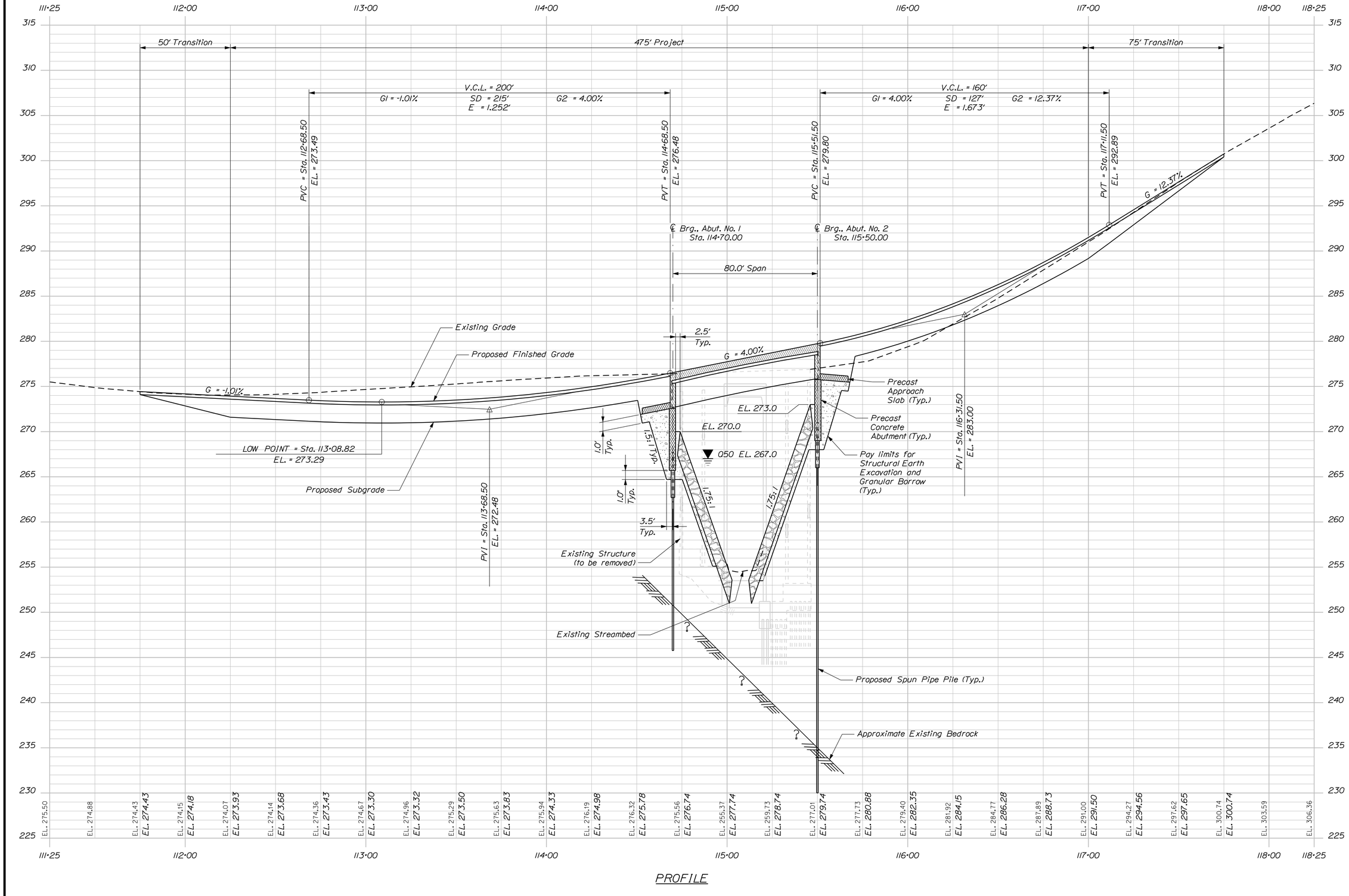

PROFILE

STATE OF MAINE
DEPARTMENT OF TRANSPORTATION

STP-2046(600)

WIN 20466.00

BRIDGE NO. 2199

BRIDGE PLANS

PROJ. MANAGER	M. Parlen		
DESIGN-DETAILED	G. Gustafson	D. Damren	Mar. 2016
CHECKED-REVIEWED	G. Gustafson		
DESIGN2-DETAILED2			
DESIGN3-DETAILED3			
REVISIONS 1			
REVISIONS 2			
REVISIONS 3			
REVISIONS 4			
FIELD CHANGES			

SIGNATURE

P.E. NUMBER

DATE

CROCKETT BRIDGE
MUDDY RIVER
CUMBERLAND COUNTY
NAPLES

PROFILE

SHEET NUMBER

5

OF 44

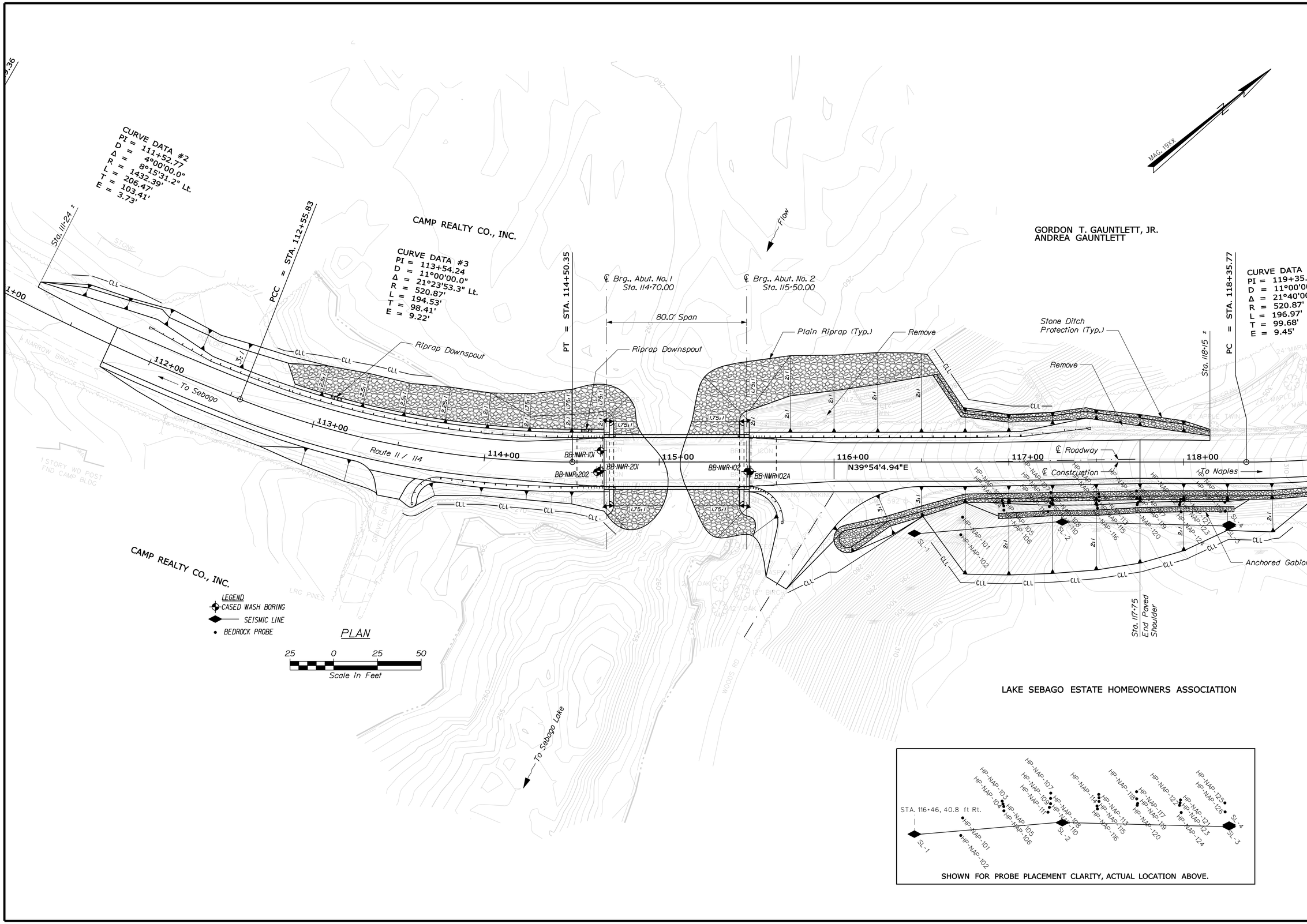

STATE OF MAINE
DEPARTMENT OF TRANSPORTATION

STP-2046(600)

WIN 20466.00

BRIDGE NO. 2199

BRIDGE PLANS

	BY	DATE
PROJ. MANAGER	M. Parlin	
DESIGN-DETAILED	G. Gustafson	D. Damren
CHECKED-REVIEWED		
DESIGN2-DETAILED2	GZA	T.WHITE	MAR 2016
DESIGN3-DETAILED3		
REVISIONS 1		
REVISIONS 2		
REVISIONS 3		
REVISIONS 4		
FIELD CHANGES		

SIGNATURE

P.E. NUMBER

DATE

CROCKETT BRIDGE
MUDDY RIVER
NAPLES CUMBERLAND COUNTY

BORING LOCATION PLAN

SHEET NUMBER

6

OF 44

Filename: ...\00\GEOTECH\MSTA\006_BLP1.dgn Division: BRIDGE Username: dana.damren Date:4/4/2016

Filename: ...\00\GEOTECH\MSTA\007_ISP1.dgn Division: BRIDGE Username: dana.damren Date:4/4/2016

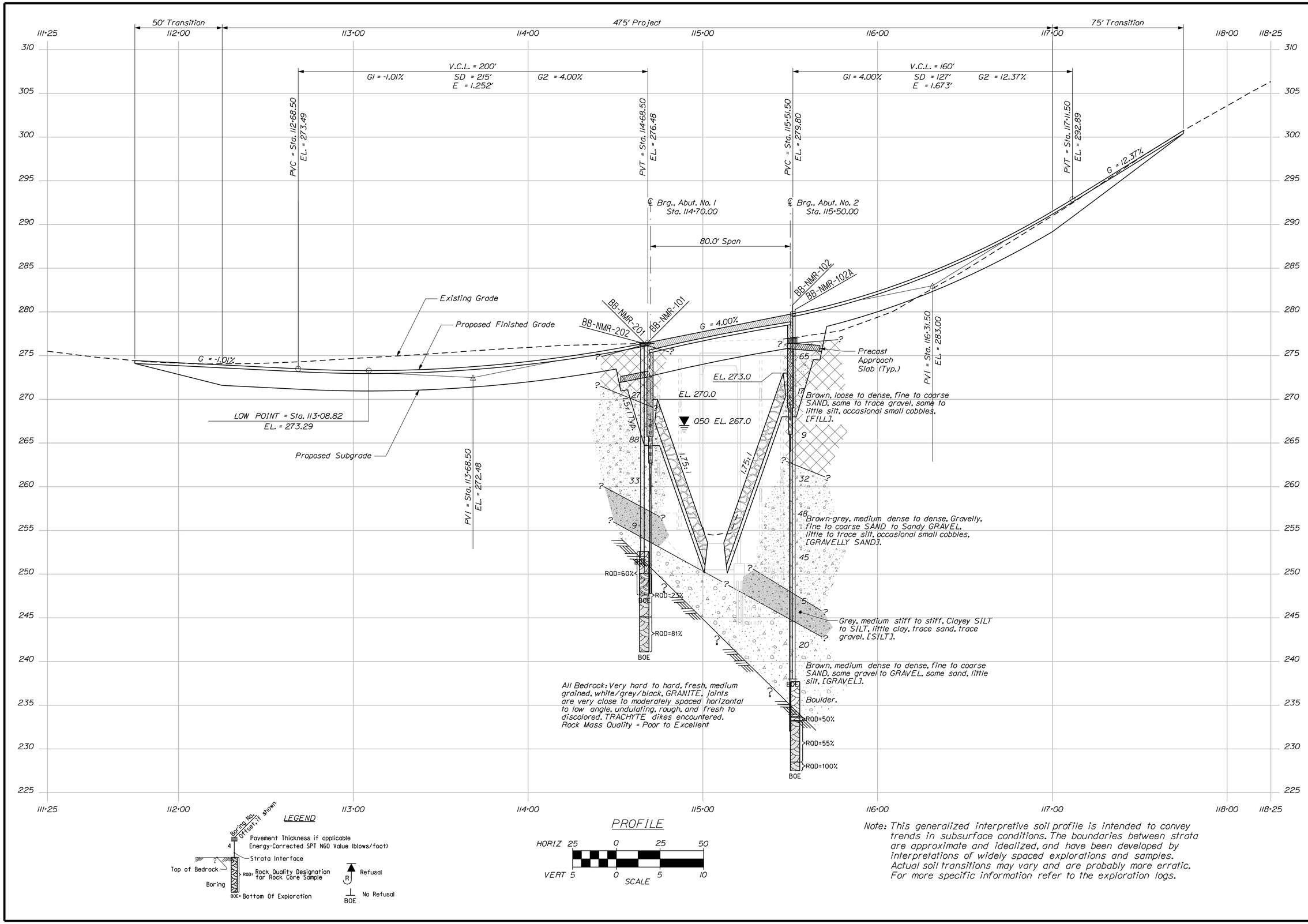

LEGEND

PROFILE

Note: This generalized interpretive soil profile is intended to convey trends in subsurface conditions. The boundaries between strata are approximate and idealized, and have been developed by interpretations of widely spaced explorations and samples. Actual soil transitions may vary and are probably more erratic. For more specific information refer to the exploration logs.

STATE OF MAINE
DEPARTMENT OF TRANSPORTATION

STP-2046(600)

WIN 20466.00

BRIDGE NO. 2199 — BRIDGE PLANS

		BY	DATE
PROJ. MANAGER	M. Perlin		
DESIGN-DETAILED	G. Gustafson	D. Damren	-----
CHECKED-REVIEWED	-----	-----	-----
DESIGN2-DETAILED2	GZA	T. WHITE	MAR 2016
DESIGN3-DETAILED3	-----	-----	-----
REVISIONS 1	-----	-----	-----
REVISIONS 2	-----	-----	-----
REVISIONS 3	-----	-----	-----
REVISIONS 4	-----	-----	-----
FIELD CHANGES	-----	-----	-----

SIGNATURE

P.E. NUMBER

DATE

CROCKETT BRIDGE
MUDDY RIVER
CUMBERLAND COUNTY
NAPLES

INTERPRETIVE SUBSURFACE PROFILE

SHEET NUMBER

7

OF 44

Username: dana.damren Date:4/4/2016

Filename: ...\MSTA\008_BORING LOGS1.dgn Division: BRIDGE

Maine Department of Transportation — BB-NMR-202

Soil/Rock Exploration Log — US CUSTOMARY UNITS

Project: Crockett Bridge #2199 carries Routes 11 & 114 over Muddy River
Location: Naples, Maine

Boring No.: BB-NMR-202
WIN: 20466.00

Driller:	Northern Test Boring	Elevation (ft.) 276.5	Auger ID/OD: 5" Solid Stem
Operator:	M. Nadeau	Datum: NAVD 88	Sampler: Standard Split Spoon
Logged By:	B. Wilder	Rig Type: CME 45C	Hammer Wt./Fall: 140#/30"
Date Start/Finish:	12/28/15-12/28/15	Drilling Method: Cased Wash Boring	Core Barrel: NQ-2"
Boring Location:	114+64.4, 5.8 ft Rt.	Casing ID/OD: NW	Water Level(ft): Not measured

Hammer Efficiency Factor: -- Hammer Type: Automatic ☐ Hydraulic ☐ Rope & Cathead ☐

Definitions:
D = Split Spoon Sample
WO = Unsuccessful Split Spoon Sample attempt
U = Thin Wall Tube Sample
WU = Unsuccessful Thin Wall Tube Sample attempt
V = Insitu Vane Shear Test. PP = Pocket Penetrometer
WV = Unsuccessful Insitu Vane Shear Test attempt
R = Rock Core Sample
SSA = Solid Stem Auger
HSA = Hollow Stem Auger
RC = Roller Cone
WOH = weight of rods or casing
WOR = weight of one person
S_u = Insitu Field Vane Shear Strength (psf)
T_v = Pocket Torvane Shear Strength (psf)
q_u = Unconfined Compressive Strength (ksf)
Uncorrected = Raw Field SPT Nvalue
Hammer Efficiency Factor = Annual Calibration Value
N_{60} = SPT N-uncorrected corrected for hammer efficiency
$S_{u(LAB)}$ = Lab Vane Shear Strength (psf)
WC = water content, percent
LL = Liquid Limit
PL = Plastic Limit
PI = Plasticity Index
G = Grain Size Analysis
C = Consolidation Test

Depth (ft.)	Sample No.	Pen./Rec. (in.)	Sample Depth (ft.)	Blows / 6 in. Recovery Strength (tsf) or RQD (%)	Uncorrected N60	Casing Blows	Elevation (ft.)	Graphic Log	Visual Description and Remarks	Laboratory Testing Results/ AASHTO and Unified Class
0									Augered to 20.0' bgs set HW casing. Drove casing to 20.9' bgs.	
5										
10										
15										
20										
25	R1	60/36	23.90 - 28.90	RQD = 60%					Increased resistance encountered at 20.9' bgs1 roller coned from 20.9'-23.9' bgs through possible rock. R1: Very hard to hard, fresh, medium grained, white/gray/black, GRANITE. Joints are very close to moderately spaced, horizontal to low angle, undulating, rough, fresh to discolored. Rock Mass Quality = Good R1: Core Times (minissec/ft): 2:30, 1:45, 1:40, 4:10, 4:15 100% Recovery.	
							252.60			
							247.60		Bottom of Exploration at 28.90 feet below ground surface.	
30										
35										
40										
45										
50										

Remarks:

Stratification lines represent approximate boundaries between soil typest transitions may be gradual.

* Water level readings have been made at times and under conditions stated. Groundwater fluctuations may occur due to conditions other than those present at the time measurements were made.

Page 1 of 1

Boring No.: BB-NMR-202

Maine Department of Transportation — BB-NMR-201

Soil/Rock Exploration Log — US CUSTOMARY UNITS

Project: Crockett Bridge #2199 carries Routes 11 & 114 over Muddy River
Location: Naples, Maine

Boring No.: BB-NMR-201
WIN: 20466.00

Driller:	MaineDOT	Elevation (ft.) 276.5	Auger ID/OD: 5" Solid Stem
Operator:	B. Wilder	Rig Type: CME Trailer Rig	Sampler: --
Logged By:	E. Lanstein	Drilling Method: Cased Wash Boring	Hammer Wt./Fall: --
Date Start/Finish:	12/10/2015-12/10/2015	Casing ID/OD: NW	Core Barrel: --
Boring Location:	114+46.4, 4.8 ft Rt.	Water Level(ft): Not measured	

Hammer Efficiency Factor: -- Hammer Type: Automatic ☐ Hydraulic ☐ Rope & Cathead ☐

Definitions:
D = Split Spoon Sample
WO = Unsuccessful Split Spoon Sample attempt
U = Thin Wall Tube Sample
WU = Unsuccessful Thin Wall Tube Sample attempt
V = Insitu Vane Shear Test. PP = Pocket Penetrometer
WV = Unsuccessful Insitu Vane Shear Test attempt
R = Rock Core Sample
SSA = Solid Stem Auger
HSA = Hollow Stem Auger
RC = Roller Cone
WOH = weight of rods or casing
WOR = weight of one person
S_u = Insitu Field Vane Shear Strength (psf)
T_v = Pocket Torvane Shear Strength (psf)
q_u = Unconfined Compressive Strength (ksf)
Uncorrected = Raw Field SPT Nvalue
Hammer Efficiency Factor = Annual Calibration Value
N_{60} = SPT N-uncorrected corrected for hammer efficiency
$S_{u(LAB)}$ = Lab Vane Shear Strength (psf)
WC = water content, percent
LL = Liquid Limit
PL = Plastic Limit
PI = Plasticity Index
G = Grain Size Analysis
C = Consolidation Test

Depth (ft.)	Sample No.	Pen./Rec. (in.)	Sample Depth (ft.)	Blows / 6 in. Recovery Strength (tsf) or RQD (%)	Uncorrected N60	Casing Blows	Elevation (ft.)	Graphic Log	Visual Description and Remarks	Laboratory Testing Results/ AASHTO and Unified Class
0									Augered to 20.0' bgs set NW casing. Drove casing to 19.7' bgs. 3.5'-4.3': Apparent cobbles based on drill action. 15.7'-16.2': Apparent cobbles based on drill action. Advanced roller cone below casing through soil from 19.7'-25.5' bgs. Drove casing to 21.0' bgs. Driller indicated drive shoe was damaged1 abandoned boring.	
5										
10										
15										
20										
25							251.00		Bottom of Exploration at 25.50 feet below ground surface.	
30										
35										
40										
45										
50										

Remarks:

Stratification lines represent approximate boundaries between soil typest transitions may be gradual.

* Water level readings have been made at times and under conditions stated. Groundwater fluctuations may occur due to conditions other than those present at the time measurements were made.

Page 1 of 1

Boring No.: BB-NMR-201

Maine Department of Transportation — BB-NMR-101

Soil/Rock Exploration Log — US CUSTOMARY UNITS

Project: Crockett Bridge #2199 carries Routes 11 & 114 over Muddy River
Location: Naples, Maine

Boring No.: BB-NMR-101
WIN: 20466.00

Driller:	MaineDOT	Elevation (ft.) 276.2	Auger ID/OD: 5" Solid Stem
Operator:	Giles/Daggett/Giles	Datum: NAVD 88	Sampler: Standard Split Spoon
Logged By:	B. Wilder	Rig Type: CME 45C	Hammer Wt./Fall: 140#/30"
Date Start/Finish:	5/6/2015 10:30-15:30	Drilling Method: Cased Wash Boring	Core Barrel: NQ-2"
Boring Location:	114+65.6, 5.0 ft Lt.	Casing ID/OD: NW	Water Level(ft): None Observed

Hammer Efficiency Factor: 0.908 Hammer Type: Automatic ☒ Hydraulic ☐ Rope & Cathead ☐

Definitions:
D = Split Spoon Sample
WO = Unsuccessful Split Spoon Sample attempt
U = Thin Wall Tube Sample
WU = Unsuccessful Thin Wall Tube Sample attempt
V = Insitu Vane Shear Test. PP = Pocket Penetrometer
WV = Unsuccessful Insitu Vane Shear Test attempt
R = Rock Core Sample
SSA = Solid Stem Auger
HSA = Hollow Stem Auger
RC = Roller Cone
WOH = weight of rods or casing
WOR = weight of one person
S_u = Insitu Field Vane Shear Strength (psf)
T_v = Pocket Torvane Shear Strength (psf)
q_u = Unconfined Compressive Strength (ksf)
Uncorrected = Raw Field SPT Nvalue
Hammer Efficiency Factor = Annual Calibration Value
N_{60} = SPT N-uncorrected corrected for hammer efficiency
$S_{u(LAB)}$ = Lab Vane Shear Strength (psf)
WC = water content, percent
LL = Liquid Limit
PL = Plastic Limit
PI = Plasticity Index
G = Grain Size Analysis
C = Consolidation Test

Depth (ft.)	Sample No.	Pen./Rec. (in.)	Sample Depth (ft.)	Blows / 6 in. Recovery Strength (tsf) or RQD (%)	Uncorrected N60	Casing Blows	Elevation (ft.)	Graphic Log	Visual Description and Remarks	Laboratory Testing Results/ AASHTO and Unified Class
0						SSA	276.62		1" Pavement — 0.58	
5	10	24/14	5.00 - 7.00	5/9/9/10	18	27	269.20		Brown, damp, medium dense, fine to coarse SAND, some gravel, little silt, occasional small cobbles. -FILL- (SM) 7.00	GM263325 A-1-b, SM WC=7.7%
10	20	24/4	10.00 - 12.00	10/47/11/6	58	88	262.70		Brown, wet, dense, gravelly, fine to coarse SAND, trace silt, occasional small cobbles. -GRAVELLY SAND- (SP) 13.50	
15	30	24/10	14.00 - 16.00	6/9/13/10	22	33	257.20		Brown, wet, medium dense, sandy GRAVEL, trace silt. -GRAVELLY SAND- (SW-GW) 19.00	GM263374 A-1-b, GW-GM WC=19.3%
20	40	24/17	19.00 - 21.00	5/3/3/4	6	9	253.70		Grey, wet, medium stiff to stiff, SILT, little clay, trace sand, trace gravel. -SILT- (ML) 22.50	GM263315 A-4, ML WC=27.2%
25	50	9.6/9.6	24.00 - 24.80	34/50(3.6")	---	180	250.20		Brown, wet, very dense, GRAVEL, some fine to coarse sand, cobbles. Roller Coned ahead to 26.0 ft bgs. -GRAVEL- (GP) 26.00 Top of Bedrock at Elev. 250.2 ft. R1: 26.0'-29.3': Very hard, fresh, aphanitic, red/brown, TRACHYTE. Primary joints are very close to close, low angle to moderately dipping, undulating, rough, discolored, tight to open. Secondary joints are moderately spaced, high angle, undulating, rough, discolored, tight. Rock Mass Quality = Very Poor R 1:(Core Times (minissec/ft): 2:57, 3:36, 5:38, 3:33, 7:35 95% Recovery No water return.	
						150				
	R1	60/57	26.00 - 31.00	RQD = 23%		NQ-2	246.90			
									29.30	
	R2	48/48	31.00 - 35.00	RQD = 81%			242.70		29.3'-31.0': Very hard, fresh, medium grained, white/gray/black, GRANITE. R2: 31.0'-33.5': Very hard, fresh, medium grained, white/gray/black, GRANITE. Joints are very close to moderately spaced, undulating, rough, fresh to discolored, tight to partially open. Rock Mass Quality = Good R2:(Core Times (minissec/ft): 4:47, 6:33, 9:54, 7:18 100% Recovery	Ref q_u=4,940 ksf
							241.40		33.50	
							241.20		33.5'-34.8': Very hard, fresh, aphanitic, red/brown, TRACHYTE.	
									34.80	
									34.8'-35.0': Very hard, fresh, medium grained, white/gray/black, GRANITE.	
									35.00	
40									Bottom of Exploration at 35.00 feet below ground surface.	
45										
50										

Remarks:

Stratification lines represent approximate boundaries between soil typest transitions may be gradual.

* Water level readings have been made at times and under conditions stated. Groundwater fluctuations may occur due to conditions other than those present at the time measurements were made.

Page 1 of 1

Boring No.: BB-NMR-101

Maine Department of Transportation — BB-NMR-102

Soil/Rock Exploration Log — US CUSTOMARY UNITS

Project: Crockett Bridge #2199 carries Routes 11 & 114 over Muddy River
Location: Naples, Maine

Boring No.: BB-NMR-102
WIN: 20466.00

Driller:	MaineDOT	Elevation (ft.) 277.0	Auger ID/OD: 5" Solid Stem
Operator:	Giles/Daggett/Giles	Datum: NAVD 88	Sampler: Standard Split Spoon
Logged By:	B. Wilder	Rig Type: CME 45C	Hammer Wt./Fall: 140#/30"
Date Start/Finish:	5/5/2015-5/6/2015	Drilling Method: Cased Wash Boring	Core Barrel: NQ-2"
Boring Location:	115+51.4, 4.8 ft Rt.	Casing ID/OD: NW	Water Level(ft): None Observed

Hammer Efficiency Factor: 0.908 Hammer Type: Automatic ☒ Hydraulic ☐ Rope & Cathead ☐

Definitions:
D = Split Spoon Sample
WO = Unsuccessful Split Spoon Sample attempt
U = Thin Wall Tube Sample
WU = Unsuccessful Thin Wall Tube Sample attempt
V = Insitu Vane Shear Test. PP = Pocket Penetrometer
WV = Unsuccessful Insitu Vane Shear Test attempt
R = Rock Core Sample
SSA = Solid Stem Auger
HSA = Hollow Stem Auger
RC = Roller Cone
WOH = weight of rods or casing
WOR = weight of one person
S_u = Insitu Field Vane Shear Strength (psf)
T_v = Pocket Torvane Shear Strength (psf)
q_u = Unconfined Compressive Strength (ksf)
Uncorrected = Raw Field SPT Nvalue
Hammer Efficiency Factor = Annual Calibration Value
N_{60} = SPT N-uncorrected corrected for hammer efficiency
$S_{u(LAB)}$ = Lab Vane Shear Strength (psf)
WC = water content, percent
LL = Liquid Limit
PL = Plastic Limit
PI = Plasticity Index
G = Grain Size Analysis
C = Consolidation Test

Depth (ft.)	Sample No.	Pen./Rec. (in.)	Sample Depth (ft.)	Blows / 6 in. Recovery Strength (tsf) or RQD (%)	Uncorrected N60	Casing Blows	Elevation (ft.)	Graphic Log	Visual Description and Remarks	Laboratory Testing Results/ AASHTO and Unified Class
0						SSA	276.42		1" Pavement — 0.58	
5	10	24/14	1.00 - 3.00	9/19/24/11	43	65	273.00		Brown, damp, dense, fine to coarse SAND, little gravel, little silt, occasional small cobble. -FILL- (SW) 4.00	GM263400 A-1-b, SW WC=5.0%
10	20	24/12	5.00 - 7.00	6/6/5/5	11	17	269.00		Brown, moist, medium dense, fine to coarse SAND, some silt, trace gravel. -POSSIBLE FILL- (SW) 8.00	GM263913 A-2-4, SM WC=3.9%
	30	24/4	10.00 - 12.00	3/3/3/6	6	9	262.50		Light brown, wet, loose, fine to coarse SAND, some silt, trace gravel. -POSSIBLE FILL- (SW) 14.50	
15	40	24/8	15.00 - 17.00	18/10/11/10	21	32	257.00		Brown, wet, medium dense, Gravelly, fine to coarse SAND, little silt. -GRAVELLY SAND- (SW) 19.00	GM263914 A-1-b, SM WC=13.4%
20	50	24/9	19.00 - 21.00	10/22/10/6	32	48	253.00		Grey, wet, dense, Gravelly, fine to coarse SAND, little silt, with granite cobble. -GRAVELLY SAND- (SW) Roller Coned ahead to 24.0 ft bgs. 24.00	
25	60	24/13	24.00 - 26.00	6/17/13/13	30	45	248.00		Grey, wet, dense, Gravelly, fine to coarse SAND, trace silt. -GRAVELLY SAND- (SW-SM) 29.00	GM263915 A-1-b, SW-SM WC=10.3%
	TO	24/3	29.00 - 31.00	2/1/2/1	3	5	245.00		Grey, wet, medium stiff, Clayey SILT, trace fine sand. -SILT- (ML) 32.00	GM263916 Insufficient material
30	80	24/9	34.00 - 36.00	5/7/6/6	13	20	238.00		Brown, wet, medium dense, fine to coarse SAND, some gravel, little silt. -GRAVEL- (SP-SM) 39.00 Bottom of Exploration at 39.00 feet below ground surface. BROKE NW CASING, left in 25.0' in bore hole. Moved to BB-NMR-102A. NO REFUSAL	GM263917 A-1-b, SP-SM WC=12.8%
35										
40										
45										
50										

Remarks:

Stratification lines represent approximate boundaries between soil typest transitions may be gradual.

* Water level readings have been made at times and under conditions stated. Groundwater fluctuations may occur due to conditions other than those present at the time measurements were made.

Page 1 of 1

Boring No.: BB-NMR-102

STATE OF MAINE
DEPARTMENT OF TRANSPORTATION

STP-2046(600)
WIN 20466.00
BRIDGE NO. 2199
BRIDGE PLANS

		BY	DATE
PROJ. MANAGER	M. Parlin		
DESIGN-DETAILED	G. Gustafson	D. Damren	-----
CHECKED-REVIEWED	-----	-----	-----
DESIGN2-DETAILED2	GZA	T. WHITE	MAR 2016
DESIGN3-DETAILED3	-----	-----	-----
REVISIONS 1	-----	-----	-----
REVISIONS 2	-----	-----	-----
REVISIONS 3	-----	-----	-----
REVISIONS 4	-----	-----	-----
FIELD CHANGES	-----	-----	-----

SIGNATURE

P.E. NUMBER

DATE

CROCKETT BRIDGE
MUDDY RIVER
CUMBERLAND COUNTY
NAPLES

BORING LOGS

SHEET NUMBER
8
OF 44

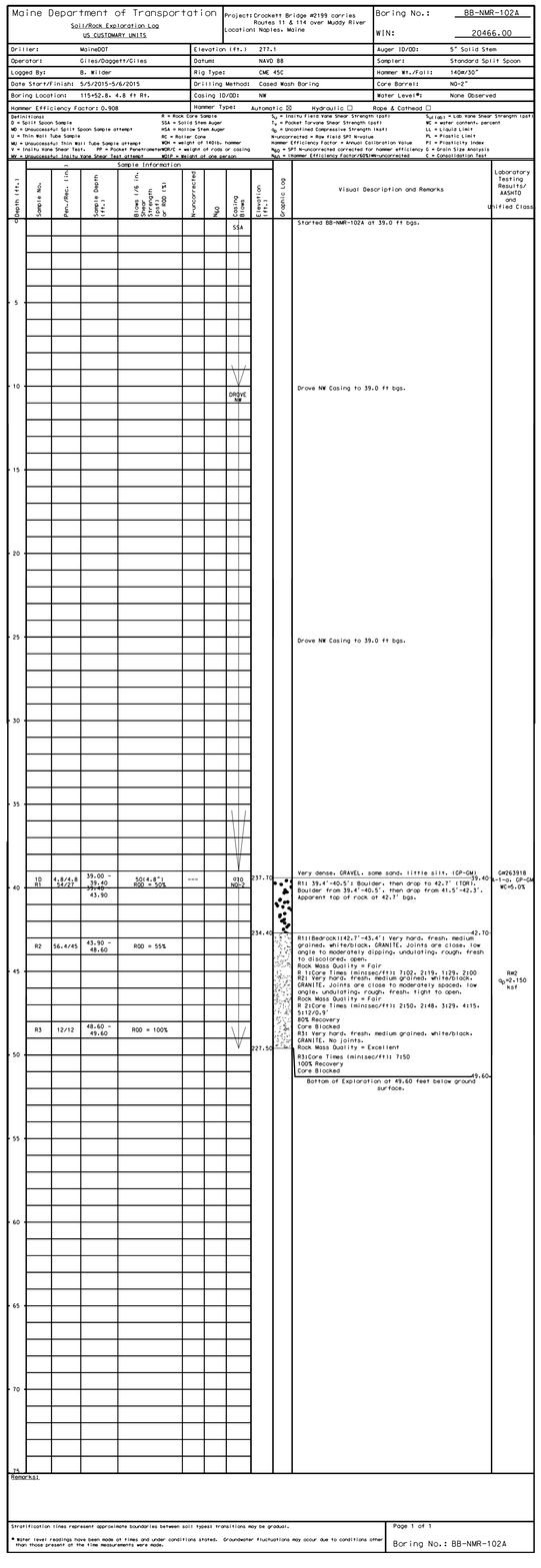

INTERPRETED BEDROCK DATA FROM AIR ROTARY PROBES			
Probe Designation	Estimated Top of Rock		
	Elevation (ft - NAVD 88)	Station	Offset (ft)
HP-NAP-101	289.1	116+73.6	41.4
HP-NAP-102	292.6	116+72.5	60.4
HP-NAP-103	291.3	116+96.2	22.7
HP-NAP-104	294.0	116+96.6	26.1
HP-NAP-105	294.6	116+97.1	27.5
HP-NAP-106	298.6	116+97.2	36.3
HP-NAP-107	296.8	117+23.9	17.4
HP-NAP-108	299.8	117+23.9	20.4
HP-NAP-109	301.7	117+23.8	31.2
HP-NAP-110	303.8	117+23.2	39.3
HP-NAP-111	304.7	117+22.4	49.0
HP-NAP-112	301.7	117+51.4	18.5
HP-NAP-113	304.1	117+51.5	20.9
HP-NAP-114	304.6	117+51.5	31.9
HP-NAP-115	305.4	117+50.4	61.5
HP-NAP-116	308.9	117+50.7	62.1
HP-NAP-117	302.5	117+73.0	16.6
HP-NAP-118	304.4	117+73.1	26.2
HP-NAP-119	303.8	117+73.6	46.0
HP-NAP-120	< 312.0	117+73.4	> 67.8
HP-NAP-121	304.6	117+98.2	21.3
HP-NAP-122	305.3	117+97.9	28.8
HP-NAP-123	307.2	117+97.6	43.1
HP-NAP-124	307.9	117+98.5	59.9
HP-NAP-125	308.2	118+23.5	24.9
HP-NAP-126	309.9	118+23.7	37.8

STATE OF MAINE
DEPARTMENT OF TRANSPORTATION
STP-2046(600)
WIN 20466.00
BRIDGE NO. 2199
BRIDGE PLANS

		BY	DATE
PROJ. MANAGER	M. Perlin		
DESIGN-DETAILED	G. Gustafson	D. Domren	
CHECKED-REVIEWED	-----	-----	-----
DESIGN2-DETAILED2	GZA	T. WHITE	MAR 2016
DESIGN3-DETAILED3	----------	----------	----------
REVISIONS 1	------	------	------
REVISIONS 2	------	------	------
REVISIONS 3	------	------	------
REVISIONS 4	------	------	------
FIELD CHANGES	------	------	------

SIGNATURE

P.E. NUMBER

DATE

CROCKETT BRIDGE
MUDDY RIVER
CUMBERLAND COUNTY
NAPLES

BORING LOGS

SHEET NUMBER
9
OF 44

Username: dana.domren Date:4/4/2016
Filename: ...\MSTA\009_BORING LOGS2.dgn Division: BRIDGE

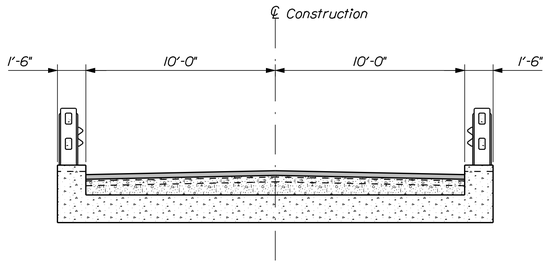

EXISTING TRANSVERSE SECTION

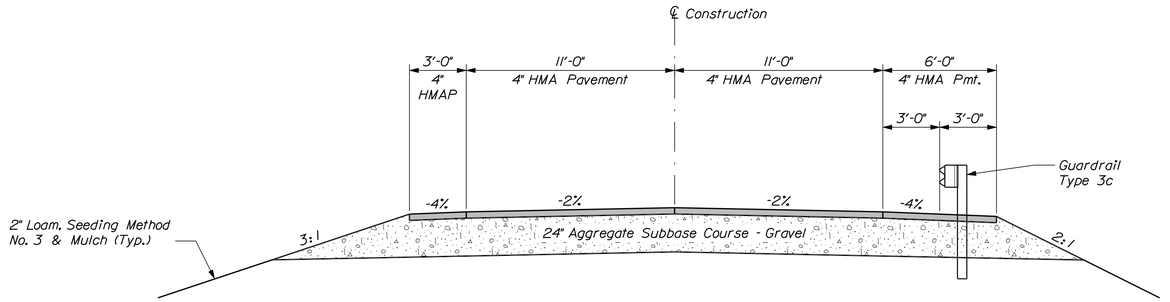

APPROACH DESIGN SECTION
Typical

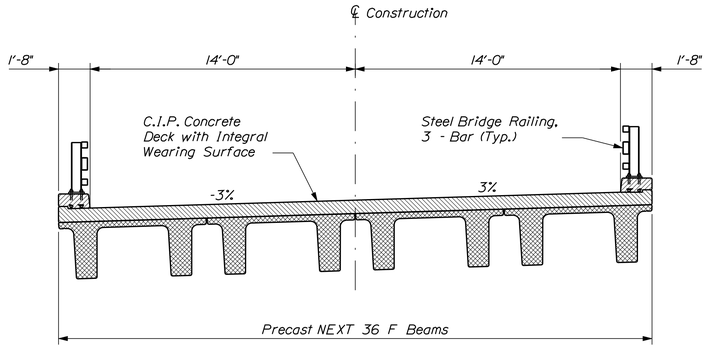

PROPOSED TRANSVERSE SECTION

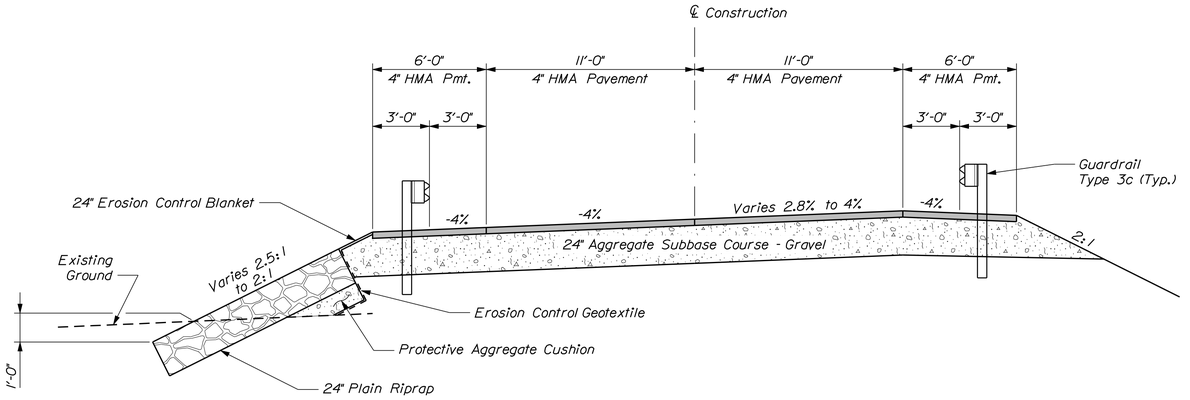

APPROACH DESIGN SECTION
Sta. 113+00 to 114+00

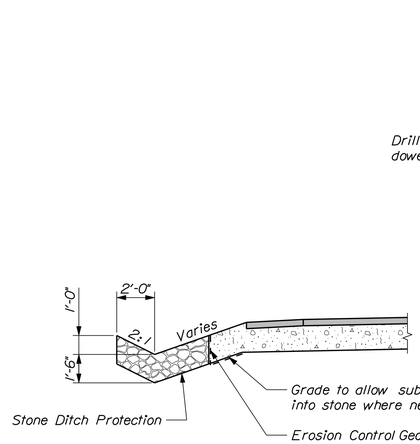

DITCH SECTION
Sta. 116+75 ± to 118+15 ±

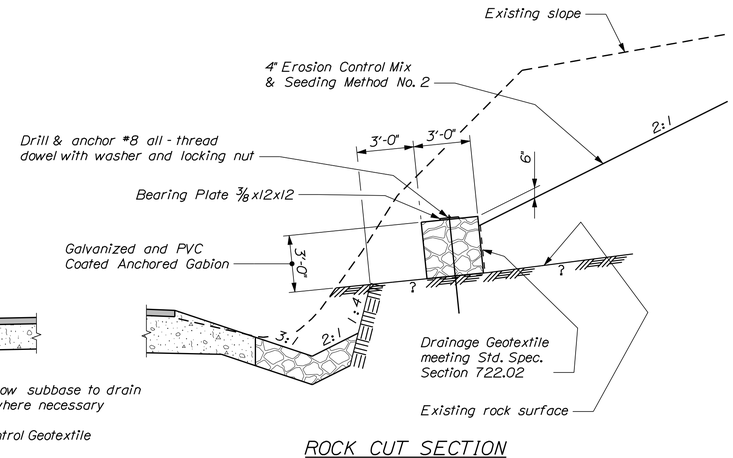

ROCK CUT SECTION
Sta. 117+00 ± to 118+25 ±

STATE OF MAINE
DEPARTMENT OF TRANSPORTATION

STP-2046(600)

WIN 20466.00

BRIDGE NO. 2199

BRIDGE PLANS

PROJ. MANAGER	M. Perin		
DESIGN-DETAILED	G. Gustafson	D. Damren	Mar. 2016
CHECKED-REVIEWED	-----	-----	-----
DESIGN2-DETAILED2	-----	-----	-----
DESIGN3-DETAILED3	-----	-----	-----
REVISIONS 1	-----	-----	-----
REVISIONS 2	-----	-----	-----
REVISIONS 3	-----	-----	-----
REVISIONS 4	-----	-----	-----
FIELD CHANGES	-----	-----	-----

SIGNATURE

P.E. NUMBER

DATE

CROCKETT BRIDGE
MUDDY RIVER
CUMBERLAND COUNTY
NAPLES

TYPICAL SECTIONS

SHEET NUMBER

10

OF 44

Filename: ...\MSTA\010_Typical Sections.dgn Division: BRIDGE Username: dana.damren Date:4/4/2016

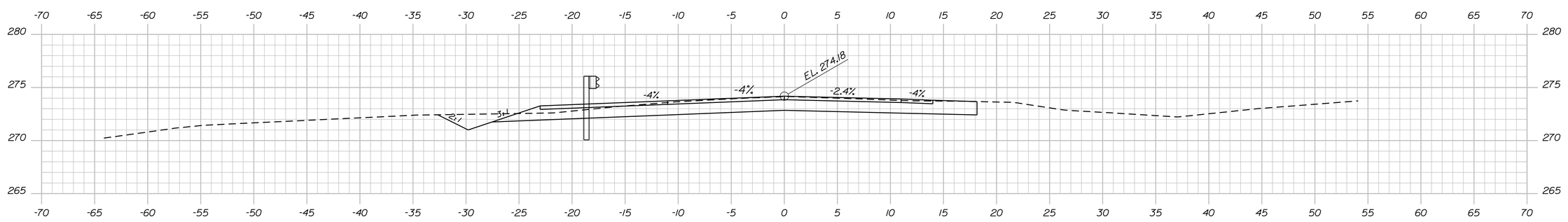

Sta. 111+94.3, 18.0' Lt. to Sta. 112+32.0, 14.0' Lt.
Install GR 350 Flared Terminal

112+00.00

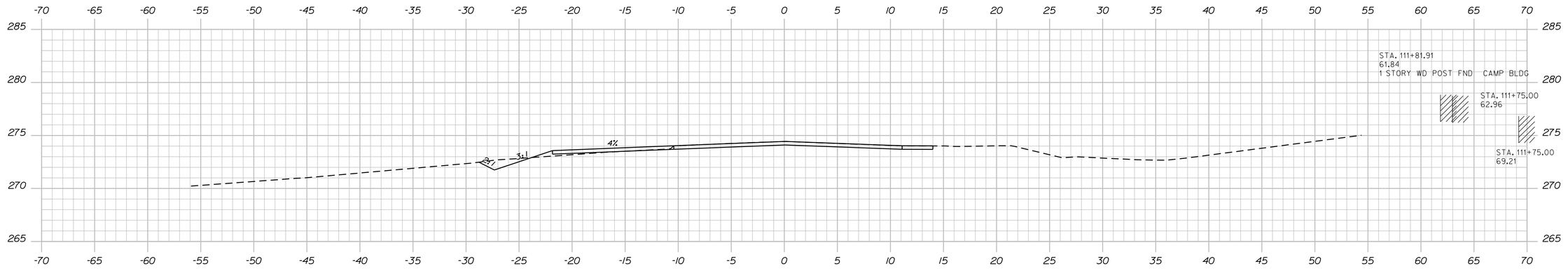

Match Existing Roadway 111+75.00 Begin Transition

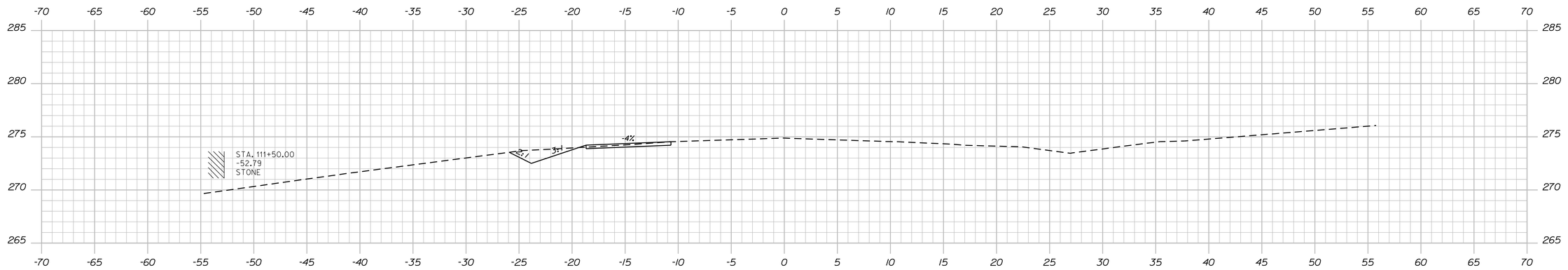

111+50.00

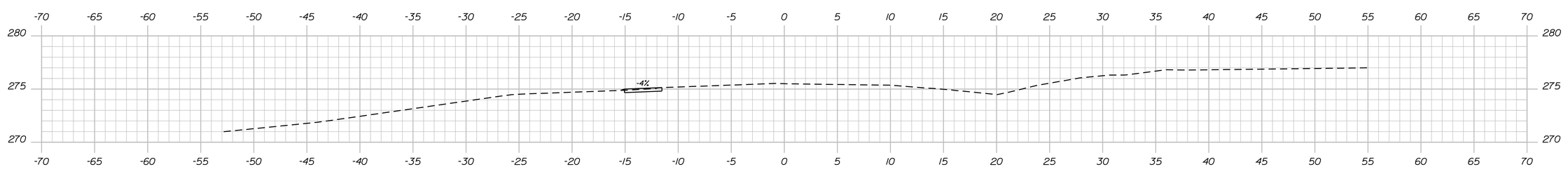

Sta. 111+24 ± Begin Shoulder Work 111+25.00

Sta. 111+25.00 to Sta. 112+00.00

STATE OF MAINE
DEPARTMENT OF TRANSPORTATION

STP-2046(600)

WIN 20466.00

BRIDGE NO. 2199

BRIDGE PLANS

PROJ. MANAGER	M. Perlin	DATE	
DESIGN-DETAILED	G. Gustafson	BY	
CHECKED-REVIEWED	D. Domren	Mar. 2016	
DESIGN2-DETAILED2	-----	-----	
DESIGN3-DETAILED3	-----	-----	
REVISIONS 1	-----	-----	
REVISIONS 2	-----	-----	
REVISIONS 3	-----	-----	
REVISIONS 4	-----	-----	
FIELD CHANGES	-----	-----	

SIGNATURE

P.E. NUMBER

DATE

CROCKETT BRIDGE
MUDDY RIVER
CUMBERLAND COUNTY
NAPLES

CROSS SECTIONS

SHEET NUMBER

11

OF 44

Filename: ...\MSTA\011_Xsect_111+50_001.dgn Division: BRIDGE Username: dana.domren Date:4/4/2016

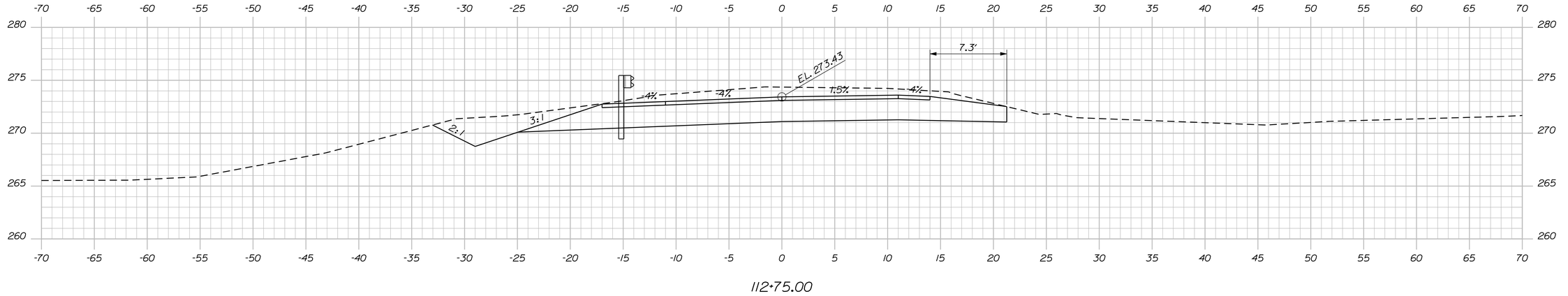

112+75.00

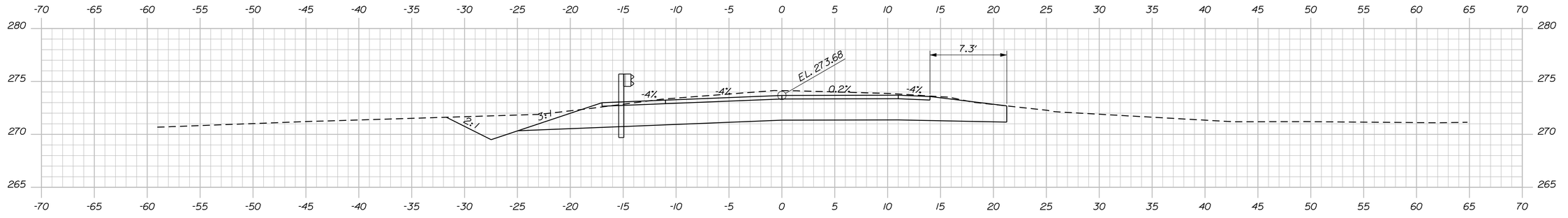

Sta. 112+32.0, 14.0' Lt. to Sta. 114+50.4, 14.0' Lt.
Install 212.5 L.F. GR Type 3c - Single Rail

112+50.00

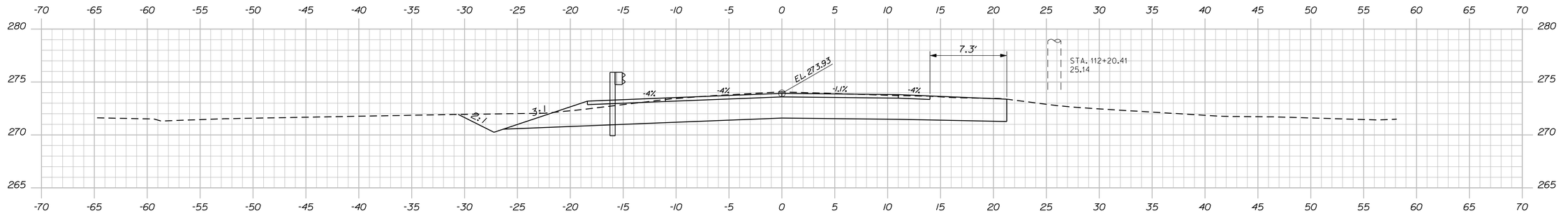

End Transition 112+25.00 Begin Project

STATE OF MAINE
DEPARTMENT OF TRANSPORTATION

STP-2046(600)

WIN 20466.00

BRIDGE NO. 2199 BRIDGE PLANS

PROJ. MANAGER	M. Perlin	BY	DATE
DESIGN-DETAILED	G. Gustafson	D. Domren	Mar. 2016
CHECKED-REVIEWED	-----	-----	-----
DESIGN2-DETAILED2	-----	-----	-----
DESIGN3-DETAILED3	-----	-----	-----
REVISIONS 1	-----	-----	-----
REVISIONS 2	-----	-----	-----
REVISIONS 3	-----	-----	-----
REVISIONS 4	-----	-----	-----
FIELD CHANGES	-----	-----	-----

SIGNATURE

P.E. NUMBER

DATE

CROCKETT BRIDGE
MUDDY RIVER
CUMBERLAND COUNTY
NAPLES

CROSS SECTIONS

SHEET NUMBER

12

OF 44

Sta. 112+25.00 to Sta. 112+75.00

Username: dana.domren Date:4/4/2016
Filename: ...\MSTA\012_Xsect_112+25_002.dgn Division: BRIDGE

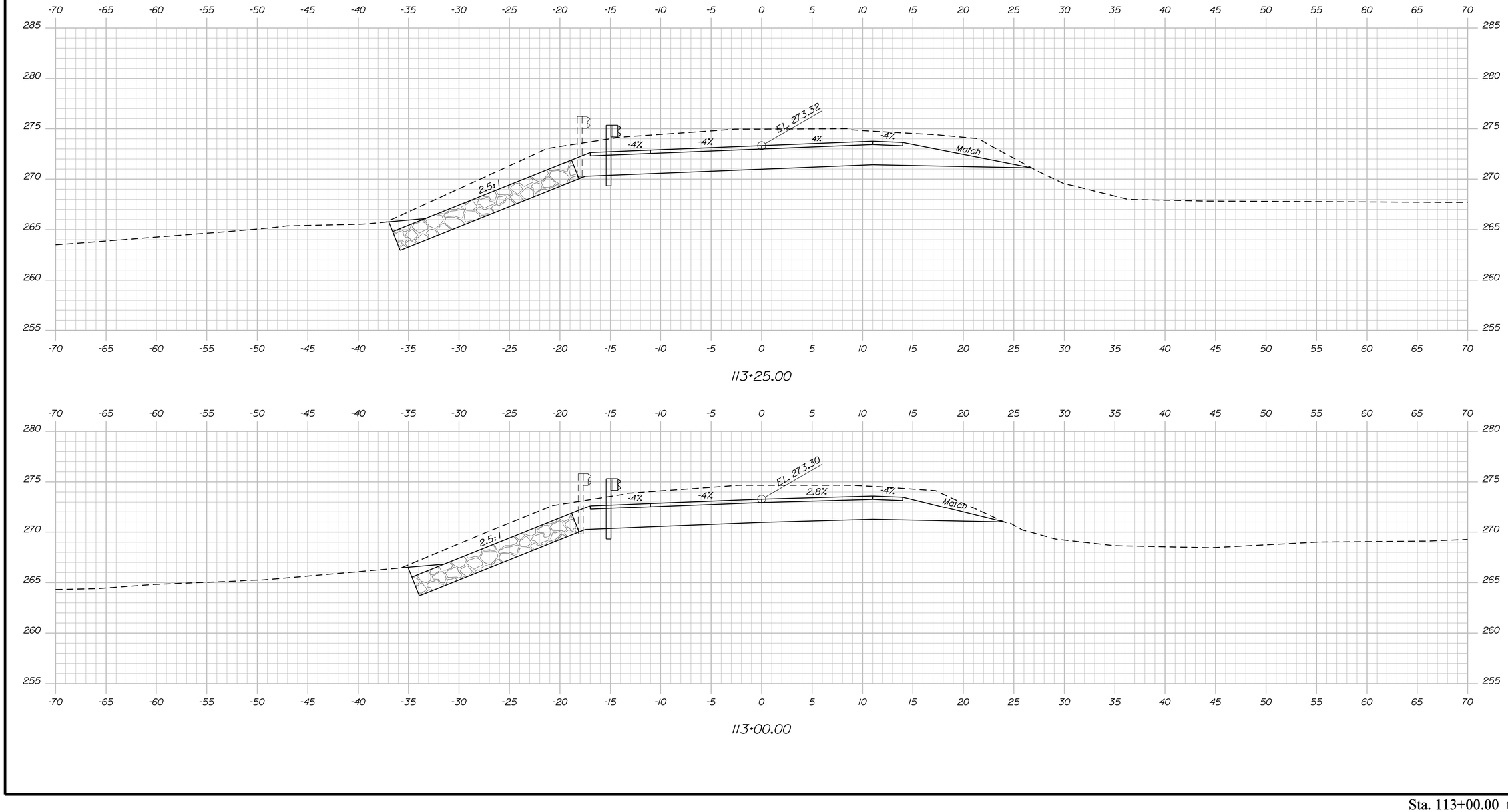

Sta. 113+00.00 to Sta. 113+25.00

STATE OF MAINE
DEPARTMENT OF TRANSPORTATION

STP-2046(600)

WIN 20466.00

BRIDGE NO. 2199

BRIDGE PLANS

PROJ. MANAGER	M. Perlin	BY	DATE
DESIGN-DETAILED	G. Gustafson	D. Domren	Mar. 2016
CHECKED-REVIEWED	-----	-----	-----
DESIGN2-DETAILED2	-----	-----	SIGNATURE
DESIGN3-DETAILED3	-----	-----	-----
REVISIONS 1	-----	-----	-----
REVISIONS 2	-----	-----	P.E. NUMBER
REVISIONS 3	-----	-----	-----
REVISIONS 4	-----	-----	-----
FIELD CHANGES	-----	-----	DATE

CROCKETT BRIDGE
MUDDY RIVER
CUMBERLAND COUNTY
NAPLES

CROSS SECTIONS

SHEET NUMBER

13

OF 44

Username: dona.domren Date:4/4/2016

Division: BRIDGE

Filename: ...\MSTA\013_Xsect_113+00_003.dgn

Filename: ...\MSTA\014_Xsect_113+50_004.dgn Division: BRIDGE Username: dana.damren Date:4/4/2016

Sta. 113+77.0, 14.0' Rt. to Sta. 114+50.4, 14.0' Rt.
Install 75.0 L.F. GR Type 3c - Single Rail

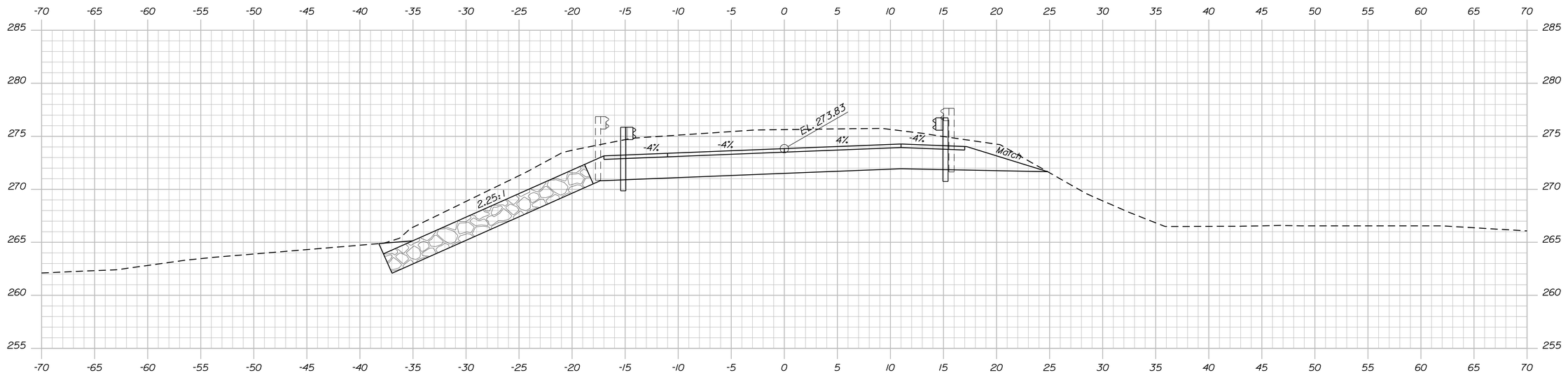

113+75.00

Sta. 113+62.8, 29.8' Rt. to Sta. 113+77.0, 14.0' Rt.
Install 25.0 L.F. GR Type 3c @ 15" R.
with Terminal End

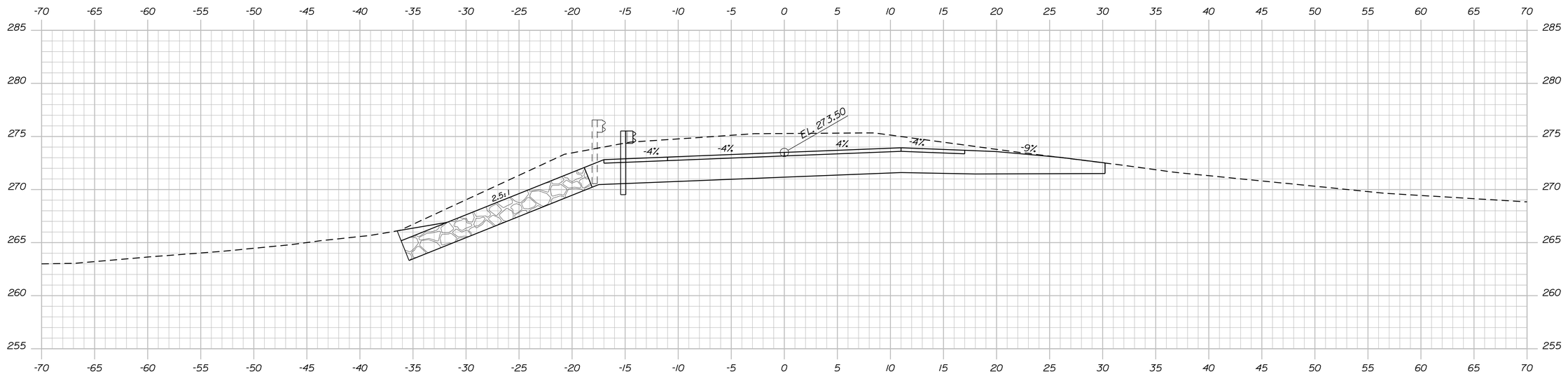

113+50.00

Gravel Entrance Right

Sta. 113+50.00 to Sta. 113+75.00

STATE OF MAINE
DEPARTMENT OF TRANSPORTATION

STP-2046(600)

WIN 20466.00

BRIDGE NO. 2199 BRIDGE PLANS

PROJ. MANAGER	M. Perlin					
DESIGN-DETAILED	G. Gustafson	D. Damren	Mar. 2016			
CHECKED-REVIEWED	-----	-----	-----			
DESIGN2-DETAILED2	-----	-----	-----			
DESIGN3-DETAILED3	-----	-----	-----			
REVISIONS 1	-----	-----	-----			
REVISIONS 2	-----	-----	-----			
REVISIONS 3	-----	-----	-----			
REVISIONS 4	-----	-----	-----			
FIELD CHANGES	-----	-----	-----			

SIGNATURE

P.E. NUMBER

DATE

CROCKETT BRIDGE
MUDDY RIVER
CUMBERLAND COUNTY
NAPLES

CROSS SECTIONS

SHEET NUMBER

14

OF 44

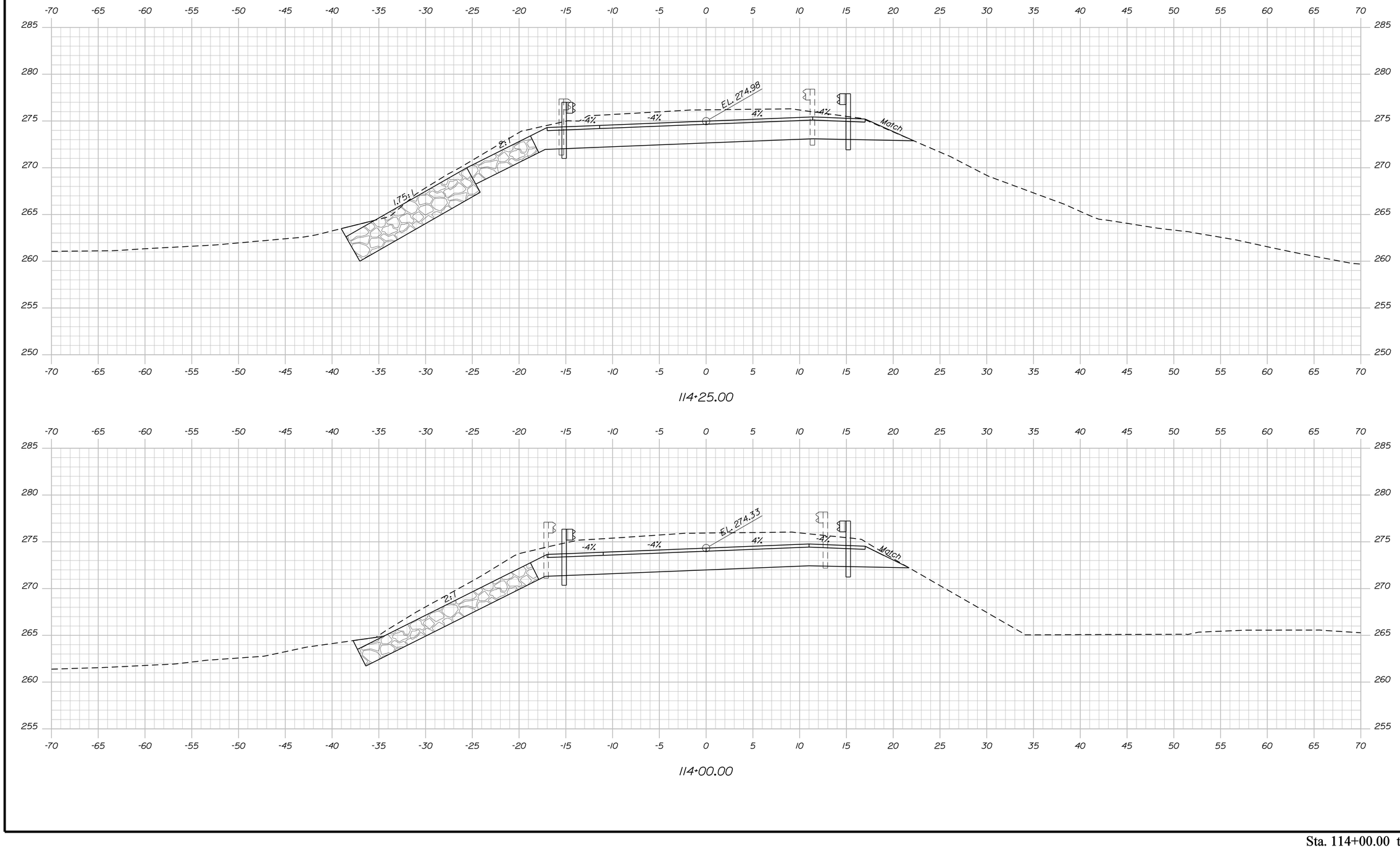

STATE OF MAINE
DEPARTMENT OF TRANSPORTATION

STP-2046(600)

WIN 20466.00

BRIDGE NO. 2199 — BRIDGE PLANS

PROJ. MANAGER	M. Perlin		
DESIGN-DETAILED	G. Gustafson	Mar. 2016	
CHECKED-REVIEWED	-----	-----	
DESIGN2-DETAILED2	-----	-----	P.E. NUMBER
DESIGN3-DETAILED3	-----	-----	-----
REVISIONS 1	-----	-----	-----
REVISIONS 2	-----	-----	-----
REVISIONS 3	-----	-----	-----
REVISIONS 4	-----	-----	-----
FIELD CHANGES	-----	-----	-----
BY	DATE	SIGNATURE	DATE

CROCKETT BRIDGE
MUDDY RIVER
CUMBERLAND COUNTY
NAPLES

CROSS SECTIONS

SHEET NUMBER
15
OF 44

Sta. 114+00.00 to Sta. 114+25.00

Filename: ...\MSTA\015_Xsect_114+00_005.dgn Division: BRIDGE Username: dana.damren Date:4/4/2016

Filename: ...\MSTA\016_Xsect_114+50_006.dgn Division: BRIDGE Username: dana.domren Date:4/4/2016

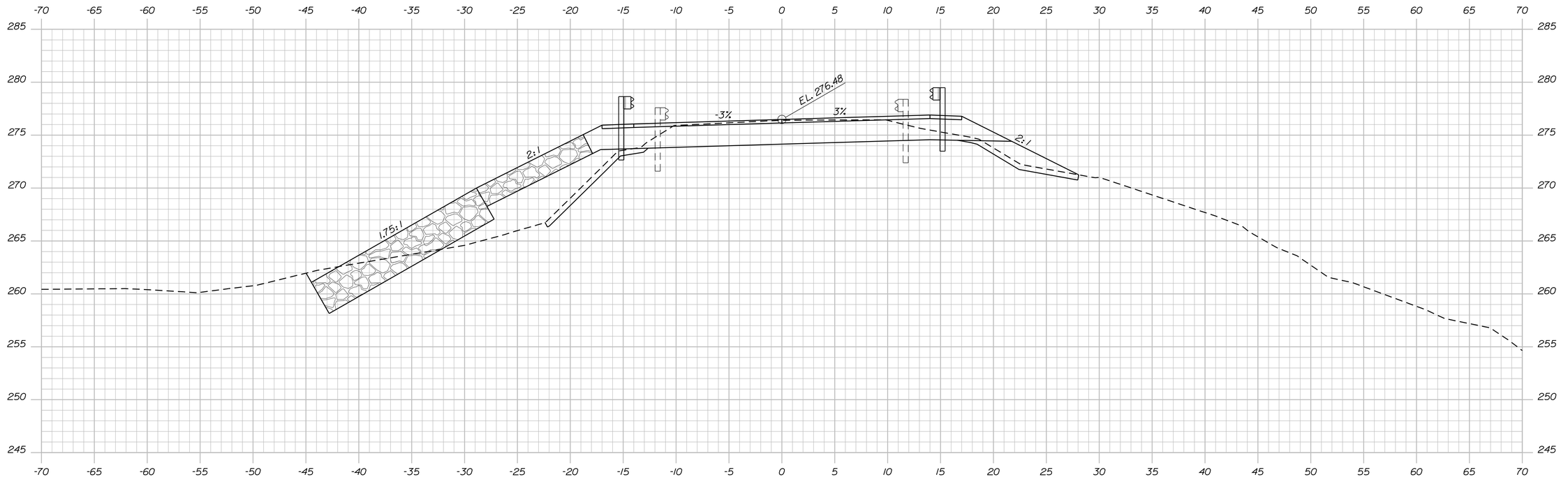

Sta. 114+50.4, 14.0' Lt. to Bridge
Install Bridge Transition Type I

114+68.50

Sta. 114+50.4, 14.0' Rt. to Bridge
Install Bridge Transition Type I

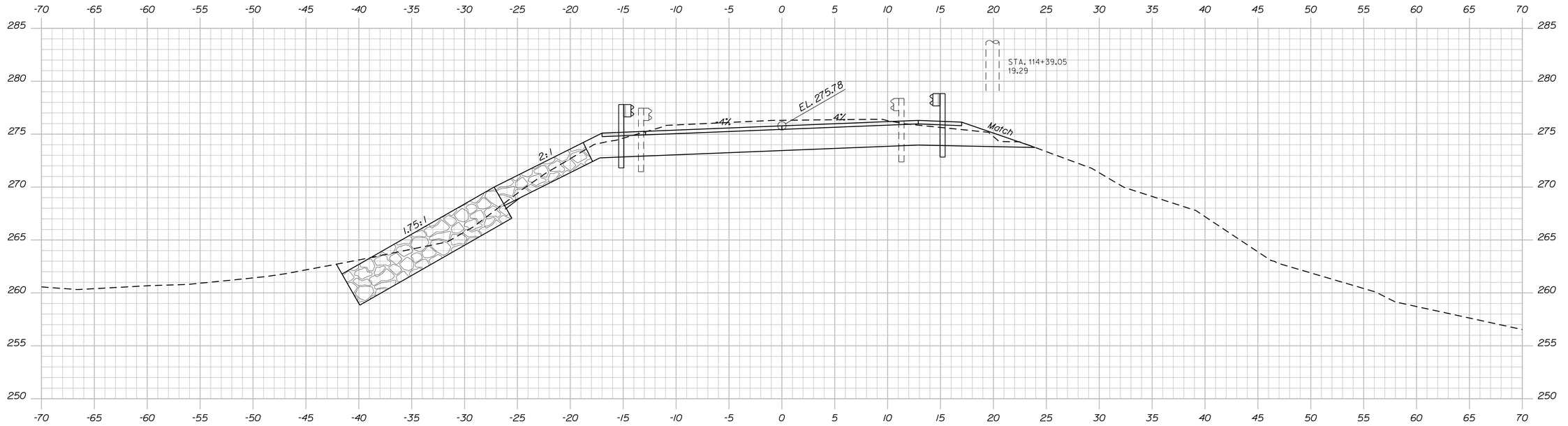

114+50.00

STATE OF MAINE
DEPARTMENT OF TRANSPORTATION

STP-2046(600)

WIN 20466.00

BRIDGE NO. 2199

BRIDGE PLANS

PROJ. MANAGER	M. Perlin		
DESIGN-DETAILED	G. Gustafson	-----	-----
CHECKED-REVIEWED	-----	-----	-----
DESIGN2-DETAILED2	D. Domren	-----	-----
DESIGN3-DETAILED3	-----	-----	-----
REVISIONS 1	-----	-----	-----
REVISIONS 2	-----	-----	-----
REVISIONS 3	-----	-----	-----
REVISIONS 4	-----	-----	-----
FIELD CHANGES	-----	-----	-----

BY | DATE

SIGNATURE

P.E. NUMBER

DATE

CROCKETT BRIDGE
MUDDY RIVER
CUMBERLAND COUNTY
NAPLES

CROSS SECTIONS

SHEET NUMBER

16

OF 44

Sta. 114+50.00 to Sta. 114+68.50

Username: dana.damren Date:4/4/2016
Division: BRIDGE
Filename: ...\MSTA\017_Xsect_115+51_007.dgn

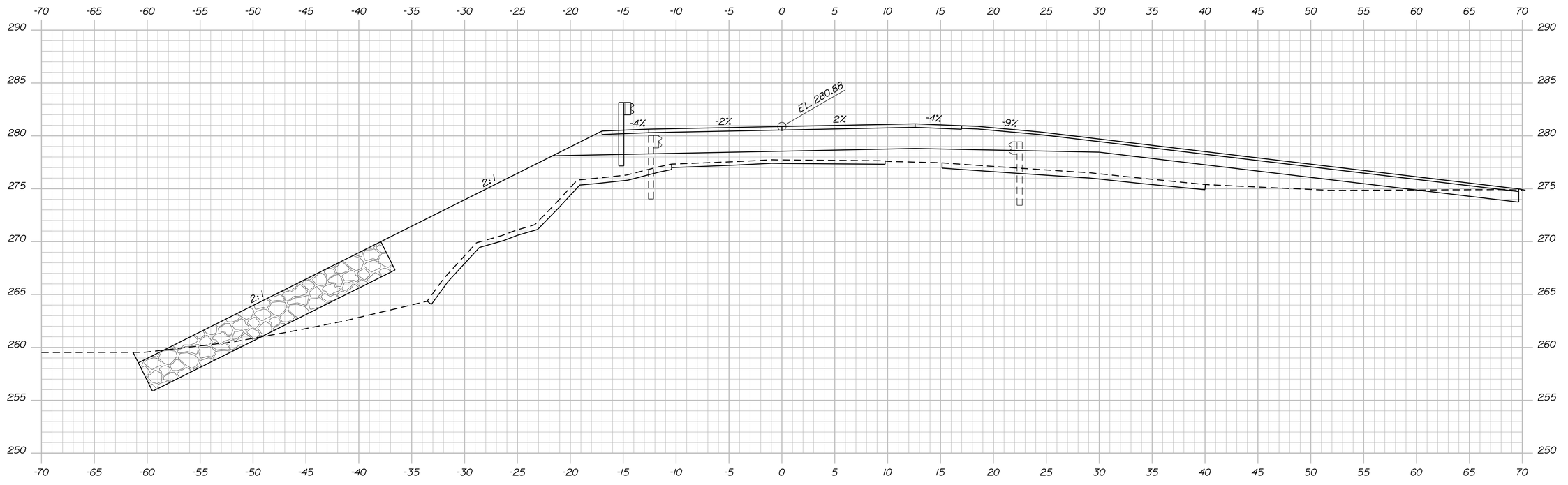

Sta. 115+69.7, 14.0' Lt. to Sta. 117+07.1, 14.0' Lt.
Install 137.5 L.F. GR Type 3c - Single Rail

115+75.00

Paved Entrance Right

Sta. 115+67.0, 22.2' Rt. to Sta. 115+70.9, 33.8' Rt.
Install 12.5 L.F. GR Type 3c @ 20' R.
with Terminal End

Bridge to Sta. 115+69.7, 14.0' Lt.
Install Bridge Transition Type I

Bridge to Sta. 115+67.0, 22.2' Rt.
Install Bridge Transition Type I @ 20' R.

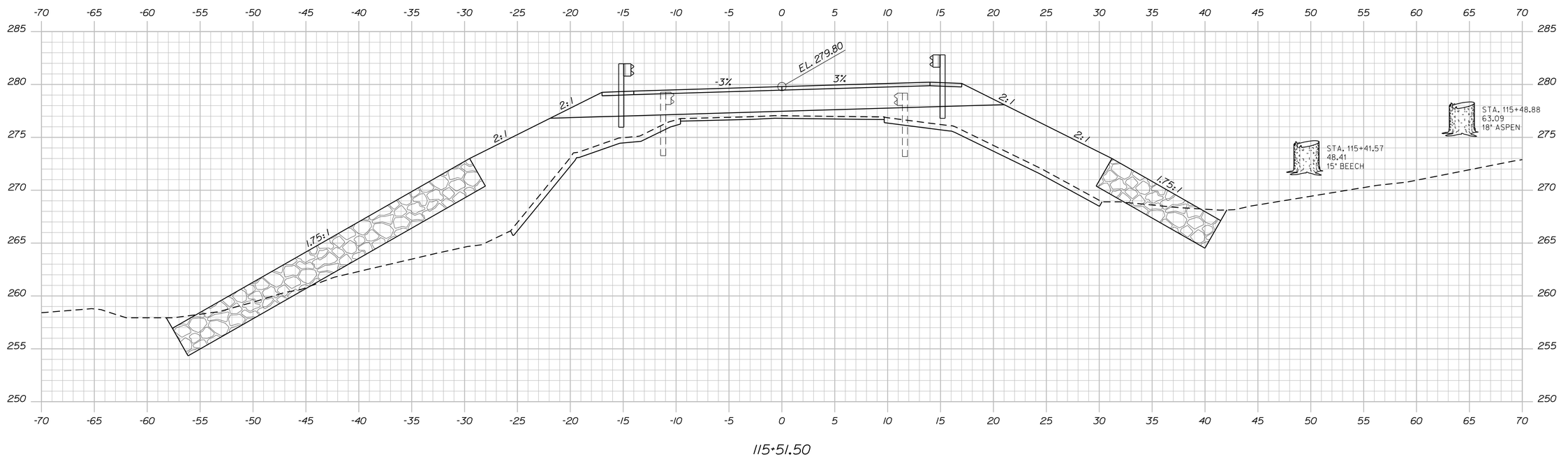

115+51.50

Sta. 115+51.50 to Sta. 115+75.00

STATE OF MAINE
DEPARTMENT OF TRANSPORTATION

STP-2046(600)

WIN 20466.00

BRIDGE NO. 2199

BRIDGE PLANS

PROJ. MANAGER	M. Perlin		
DESIGN-DETAILED	G. Gustafson	D. Damren	Mar. 2016
CHECKED-REVIEWED	-----	-----	-----
DESIGN2-DETAILED2	-----	-----	-----
DESIGN3-DETAILED3	-----	-----	-----
REVISIONS 1	-----	-----	-----
REVISIONS 2	-----	-----	-----
REVISIONS 3	-----	-----	-----
REVISIONS 4	-----	-----	-----
FIELD CHANGES	-----	-----	-----

SIGNATURE

P.E. NUMBER

DATE

CROCKETT BRIDGE
MUDDY RIVER
NAPLES CUMBERLAND COUNTY

CROSS SECTIONS

SHEET NUMBER

17

OF 44

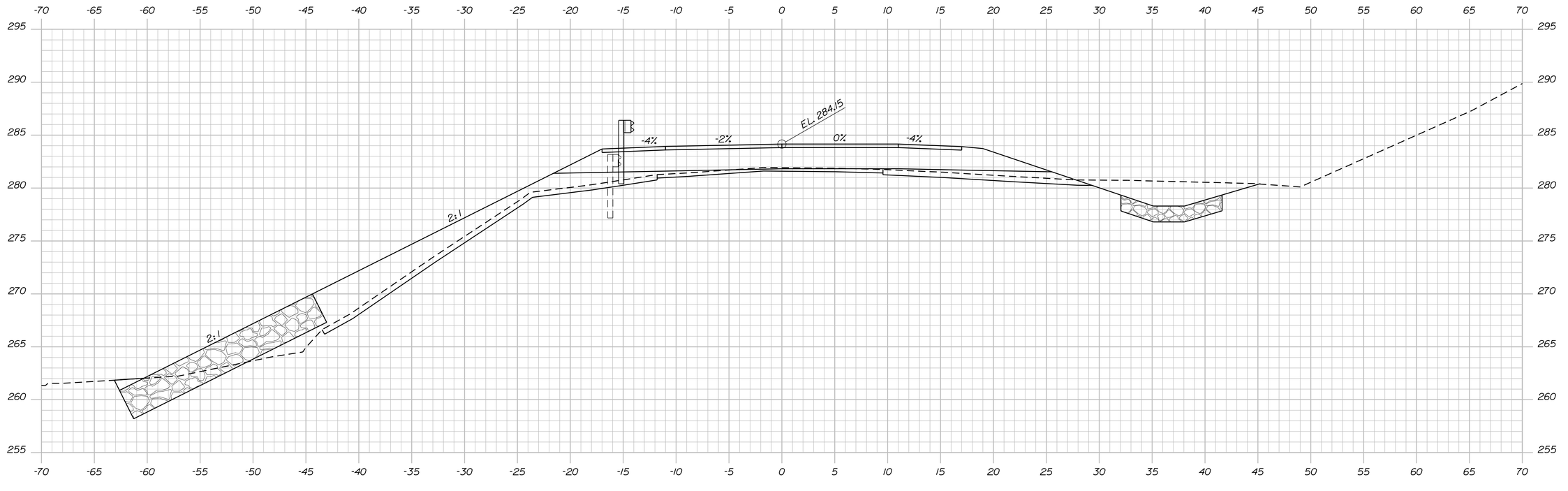

116+25.00

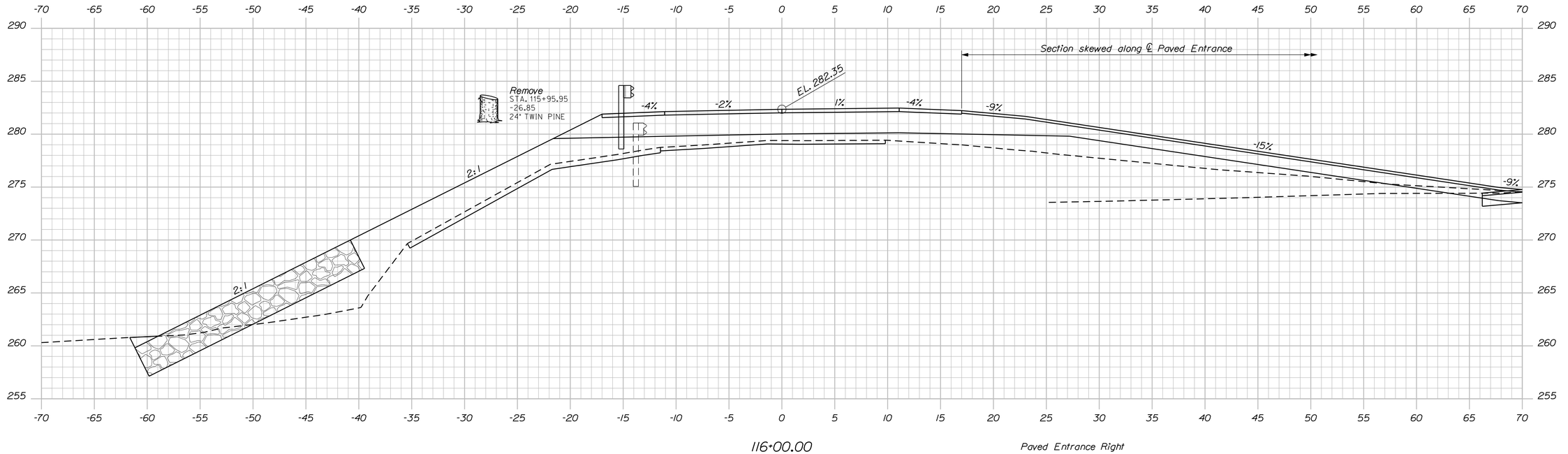

116+00.00 Paved Entrance Right

STATE OF MAINE
DEPARTMENT OF TRANSPORTATION

STP-2046(600)

WIN 20466.00

BRIDGE NO. 2199

BRIDGE PLANS

	BY	DATE
PROJ. MANAGER	M. Perlin	
DESIGN-DETAILED	G. Gustafson	Mar. 2016
CHECKED-REVIEWED	D. Domren	------
DESIGN2-DETAILED2	------	------
DESIGN3-DETAILED3	------	------
REVISIONS 1	------	------
REVISIONS 2	------	------
REVISIONS 3	------	------
REVISIONS 4	------	------
FIELD CHANGES	------	------

SIGNATURE

P.E. NUMBER

DATE

CROCKETT BRIDGE
MUDDY RIVER
NAPLES CUMBERLAND COUNTY

CROSS SECTIONS

SHEET NUMBER

18

OF 44

Sta. 116+00.00 to Sta. 116+25.00

Filename: ...\MSTA\018_Xsect_116+00_008.dgn Division: BRIDGE Username: dana.domren Date:4/4/2016

Username: dana.damren Date:4/4/2016
Division: BRIDGE
Filename: ...\MSTA\019_Xsect_116+50_001.dgn

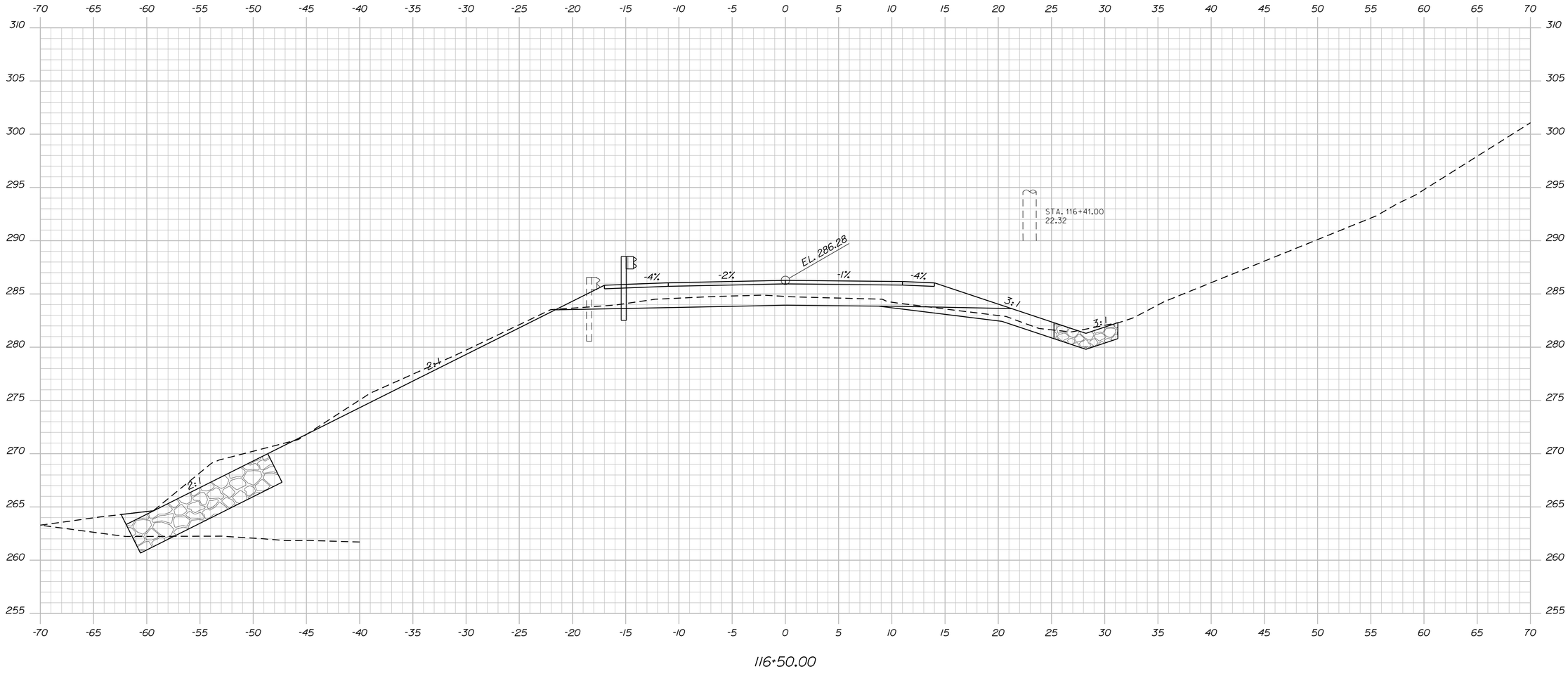

STATE OF MAINE
DEPARTMENT OF TRANSPORTATION

STP-2046(600)

WIN 20466.00

BRIDGE NO. 2199 BRIDGE PLANS

PROJ. MANAGER	M. Perlin	BY	DATE
DESIGN-DETAILED	G. Gustafson	D. Damren	Mar. 2016
CHECKED-REVIEWED	------	------	------
DESIGN2-DETAILED2	------	------	------
DESIGN3-DETAILED3	------	------	------
REVISIONS 1	------	------	------
REVISIONS 2	------	------	------
REVISIONS 3	------	------	------
REVISIONS 4	------	------	------
FIELD CHANGES	------	------	------

SIGNATURE

P.E. NUMBER

DATE

CROCKETT BRIDGE
MUDDY RIVER
CUMBERLAND COUNTY
NAPLES

CROSS SECTIONS

SHEET NUMBER

19

OF 44

Sta. 116+50.00 to Sta. 116+50.00

Filename: ...\MSTA\020_Xsect_116+75_004.dgn Username: dana.damren Date:4/4/2016 Division: BRIDGE

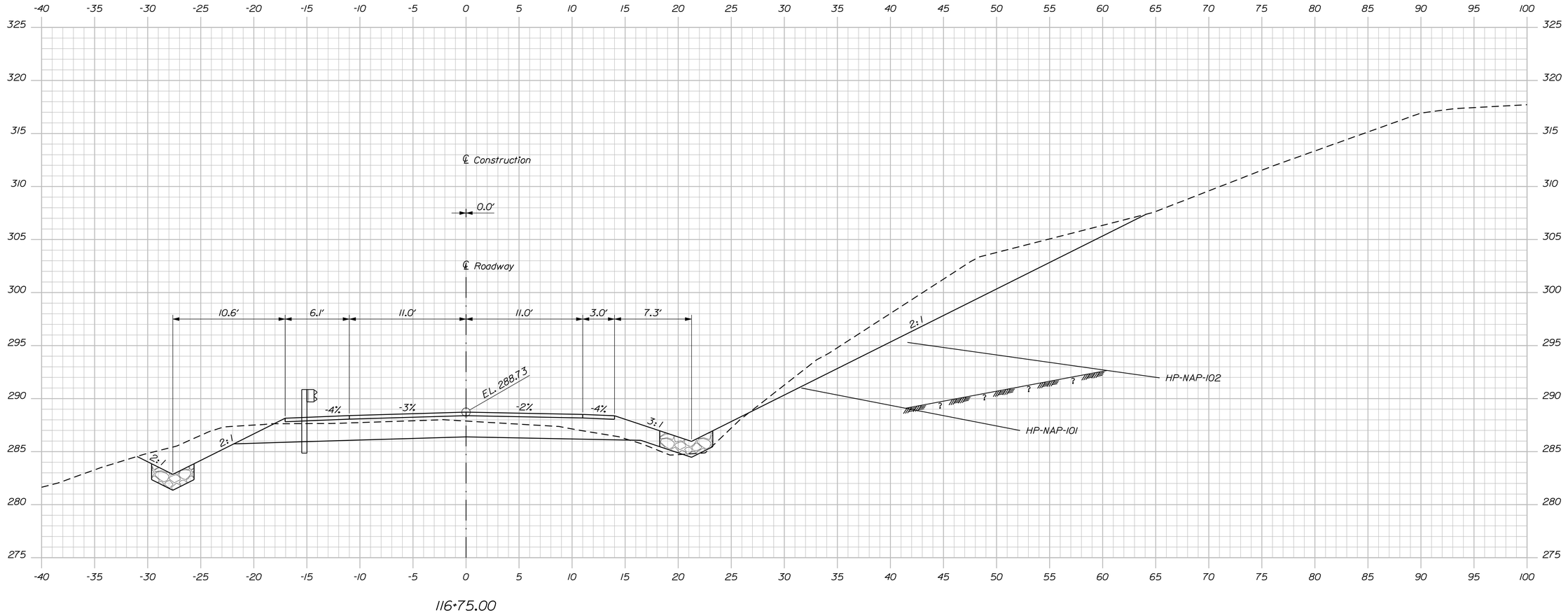

STATE OF MAINE
DEPARTMENT OF TRANSPORTATION

STP-2046(600)

WIN 20466.00

BRIDGE NO. 2199 BRIDGE PLANS

PROJ. MANAGER	M. Perlin		
DESIGN-DETAILED	G. Gustafson	DATE	Mar. 2016
CHECKED-REVIEWED	-----	BY	D. Damren
DESIGN2-DETAILED2	-----	SIGNATURE	-----
DESIGN3-DETAILED3	-----	P.E. NUMBER	-----
REVISIONS 1	-----	DATE	-----
REVISIONS 2	-----		-----
REVISIONS 3	-----		-----
REVISIONS 4	-----		-----
FIELD CHANGES	-----		-----

CROCKETT BRIDGE
MUDDY RIVER
NAPLES CUMBERLAND COUNTY

CROSS SECTIONS

SHEET NUMBER

20

OF 44

Sta. 116+75.00 to Sta. 116+75.00

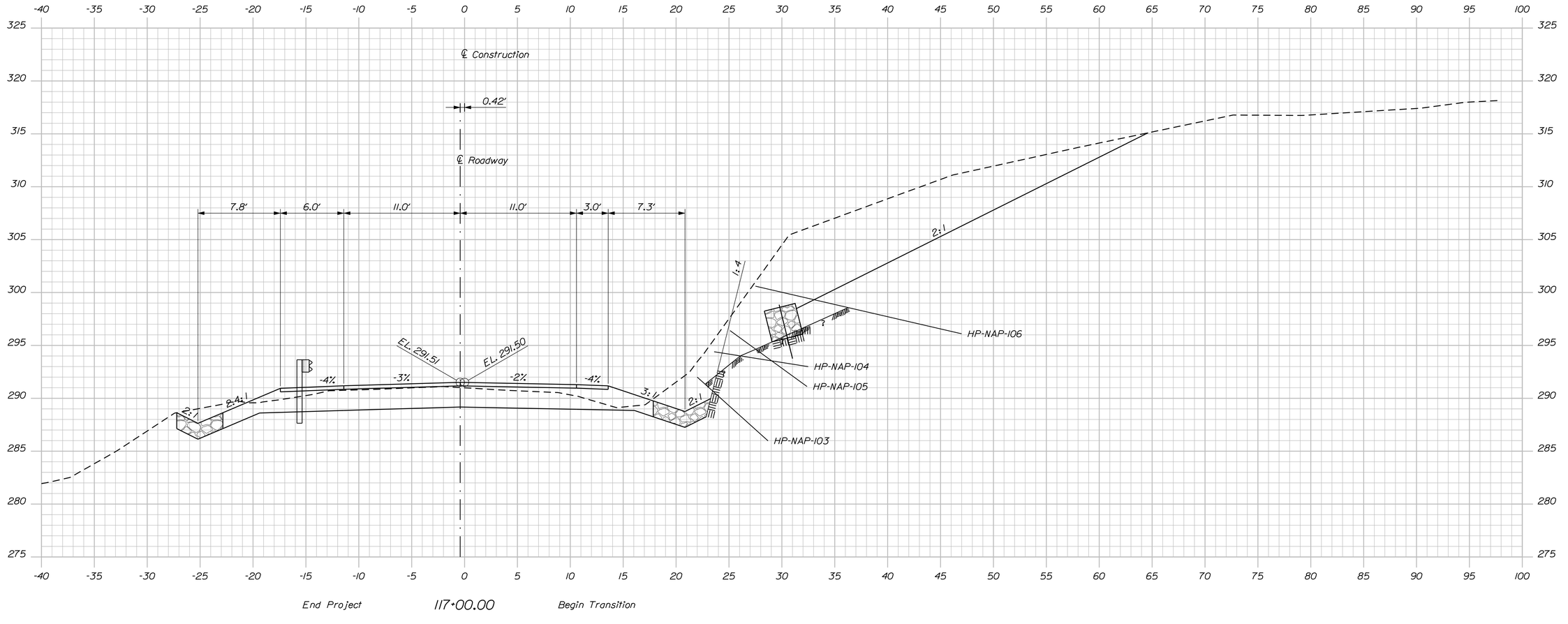

PROJ. MANAGER	M. Perlin
DESIGN-DETAILED	G. Gustafson
CHECKED-REVIEWED	-----
DESIGN2-DETAILED2	ED2
DESIGN3-DETAILED3	ED3
REVISIONS 1	-----
REVISIONS 2	-----
REVISIONS 3	-----
REVISIONS 4	-----
FIELD CHANGES	-----

BY	DATE
D. Domren	Mar. 2016
-----	-----
-----	-----
-----	-----
-----	-----
-----	-----
-----	-----
-----	-----
-----	-----

SIGNATURE

P.E. NUMBER

DATE

STATE OF MAINE
DEPARTMENT OF TRANSPORTATION

STP-2046(600)

WIN 20466.00

BRIDGE NO. 2199

BRIDGE PLANS

CROCKETT BRIDGE
MUDDY RIVER
NAPLES CUMBERLAND COUNTY

CROSS SECTIONS

SHEET NUMBER

21

OF 44

Sta. 117+00.00 to Sta. 117+00.00

Filename: ...\MSTA\021_Xsect_117+00_005.dgn Division: BRIDGE Username: dana.domren Date:4/4/2016

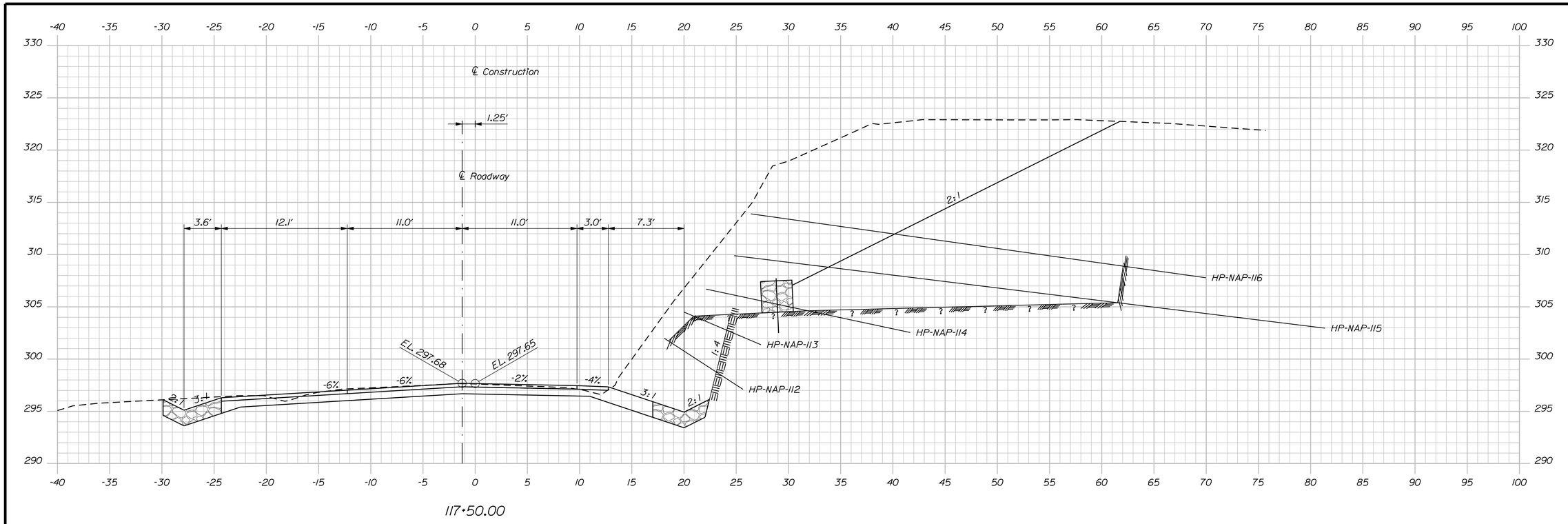

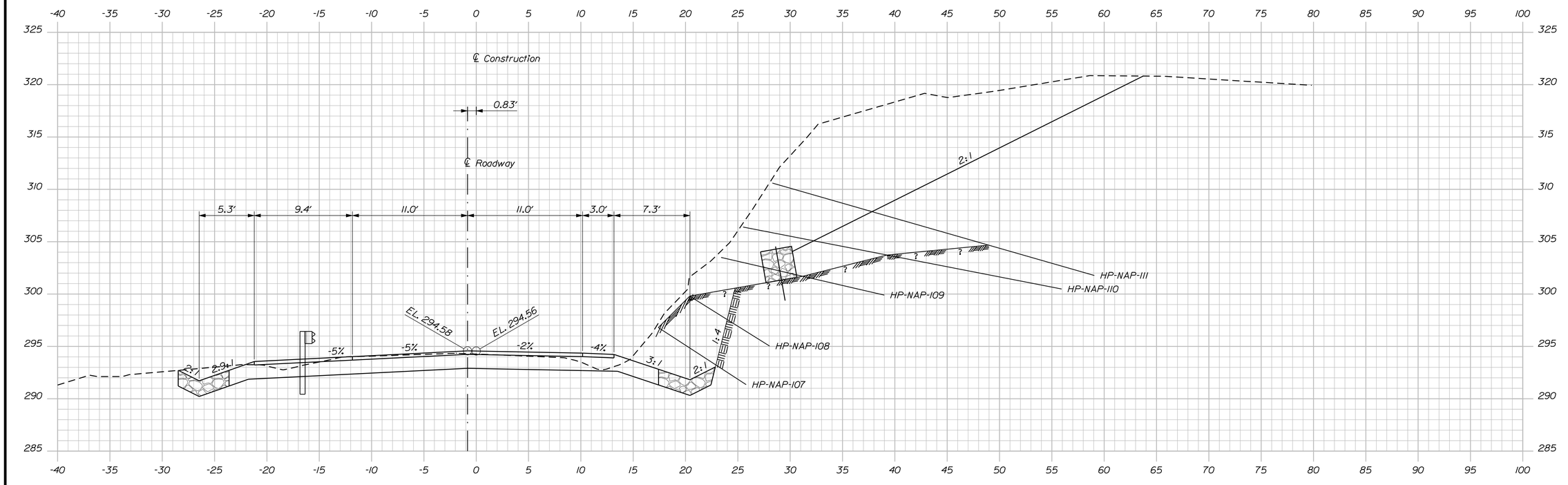

Sta. 117+07.1, 14.0' Lt. to Sta. 117+44.4, 19.2' Lt.
Install GR 350 Flared Terminal

STATE OF MAINE
DEPARTMENT OF TRANSPORTATION

STP-2046(600)

WIN 20466.00

BRIDGE NO. 2199 — BRIDGE PLANS

PROJ. MANAGER	M. Perlin		
DESIGN-DETAILED	G. Gustafson	D. Domren	Mar. 2016
CHECKED-REVIEWED	-----	-----	-----
DESIGN2-DETAILED2	-----	-----	-----
DESIGN3-DETAILED3	-----	-----	-----
REVISIONS 1	-----	-----	-----
REVISIONS 2	-----	-----	-----
REVISIONS 3	-----	-----	-----
REVISIONS 4	-----	-----	-----
FIELD CHANGES	-----	-----	-----

SIGNATURE

P.E. NUMBER

DATE

CROCKETT BRIDGE
MUDDY RIVER
NAPLES — CUMBERLAND COUNTY

CROSS SECTIONS

SHEET NUMBER

22

OF 44

Sta. 117+25.00 to Sta. 117+50.00

Username: dana.domren Date:4/4/2016 Division: BRIDGE Filename: ...\MSTA\022_Xsect_117+25_006.dgn

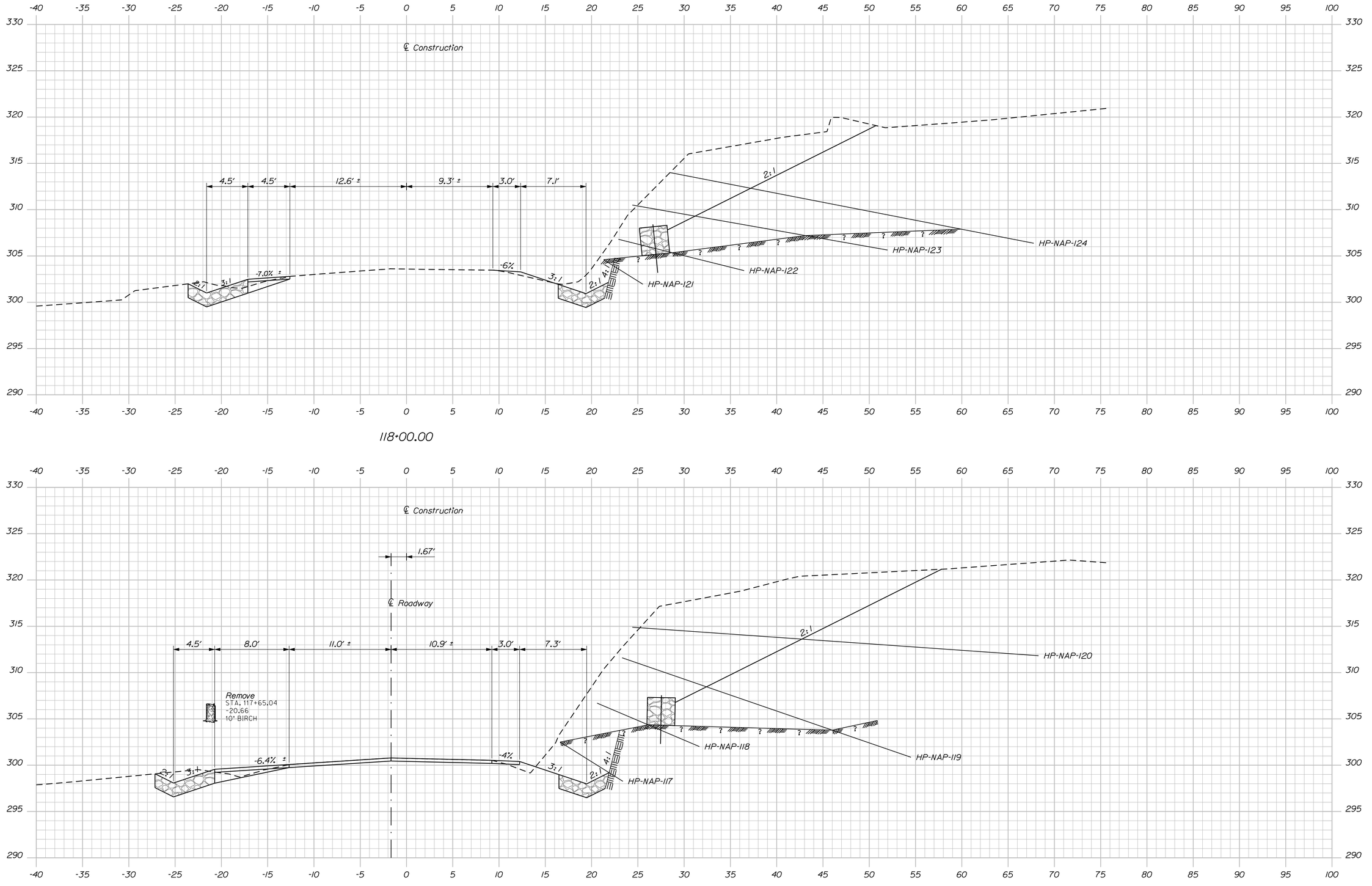

Sta. 117+75.00 to Sta. 118+00.00

STATE OF MAINE
DEPARTMENT OF TRANSPORTATION

STP-2046(600)

WIN 20466.00

BRIDGE NO. 2199

BRIDGE PLANS

PROJ. MANAGER	M. Perlin	BY	DATE
DESIGN-DETAILED	G. Gustafson	D. Domren	Mar. 2016
CHECKED-REVIEWED	-----	-----	-----
DESIGN2-DETAILED2	-----	-----	-----
DESIGN3-DETAILED3	-----	-----	-----
REVISIONS 1	-----	-----	-----
REVISIONS 2	-----	-----	-----
REVISIONS 3	-----	-----	-----
REVISIONS 4	-----	-----	-----
FIELD CHANGES	-----	-----	-----

SIGNATURE

P.E. NUMBER

DATE

CROCKETT BRIDGE
MUDDY RIVER
NAPLES CUMBERLAND COUNTY

CROSS SECTIONS

SHEET NUMBER

23

OF 44

Username: dono.domren Date:4/4/2016

Division: BRIDGE

Filename: ...\MSTA\023_Xsect_117+75_007.dgn

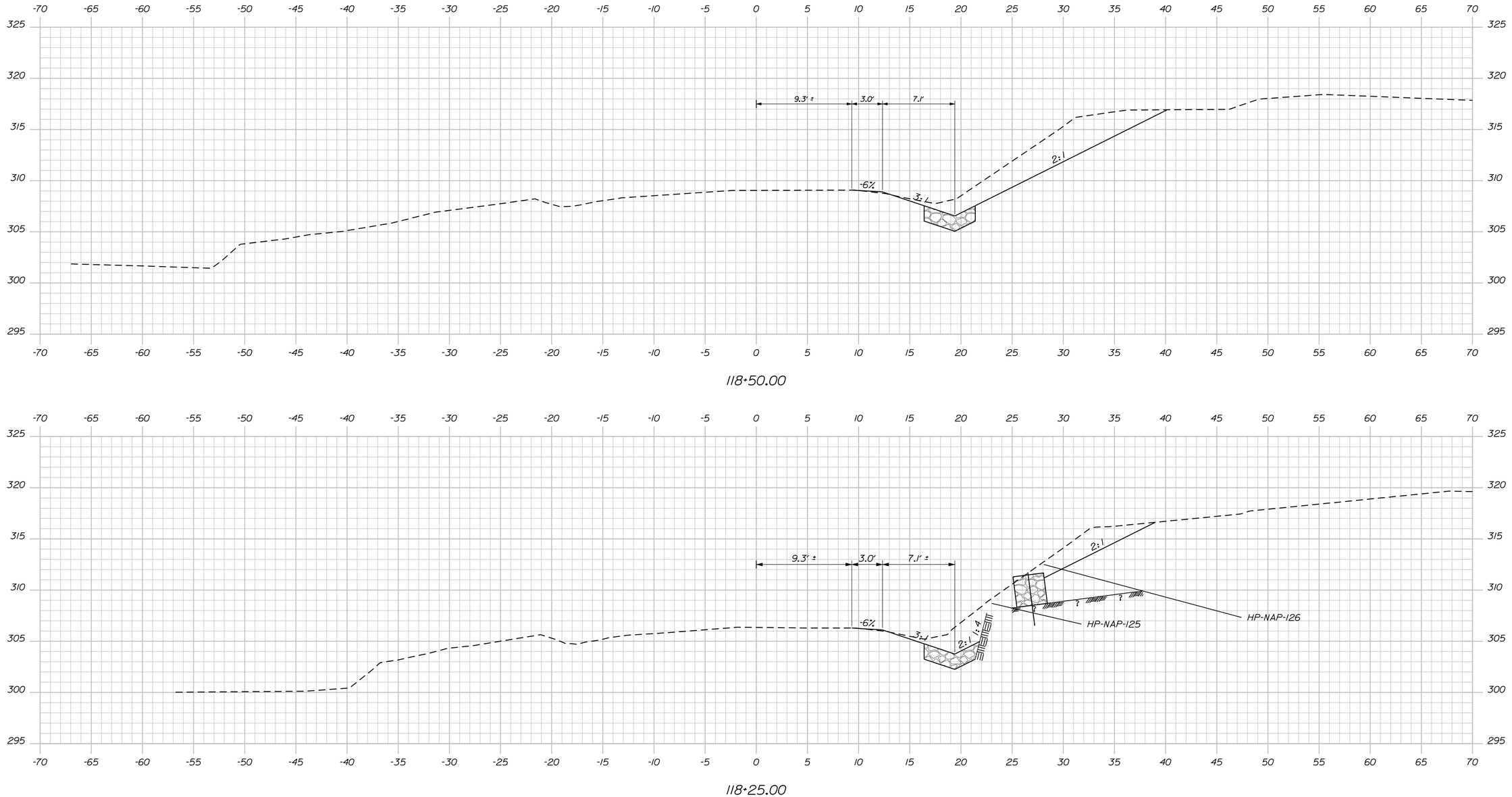

Filename: ...\MSTA\024_Xsect_118+25_002.dgn Username: dana.damren Date:4/4/2016
Division: BRIDGE

STATE OF MAINE
DEPARTMENT OF TRANSPORTATION

STP-2046(600)

WIN 20466.00

BRIDGE NO. 2199 BRIDGE PLANS

PROJ. MANAGER	M. Perlin		
DESIGN-DETAILED	G. Gustafson	BY	DATE
CHECKED-REVIEWED	-----	D. Damren	Mar. 2016
DESIGN2-DETAILED2	-----	-----	-----
DESIGN3-DETAILED3	-----	-----	-----
REVISIONS 1	-----	-----	-----
REVISIONS 2	-----	-----	-----
REVISIONS 3	-----	-----	-----
REVISIONS 4	-----	-----	-----
FIELD CHANGES	-----	-----	-----

SIGNATURE

P.E. NUMBER

DATE

CROCKETT BRIDGE
MUDDY RIVER
CUMBERLAND COUNTY
NAPLES

CROSS SECTIONS

SHEET NUMBER

24

OF 44

Sta. 118+25.00 to Sta. 118+50.00

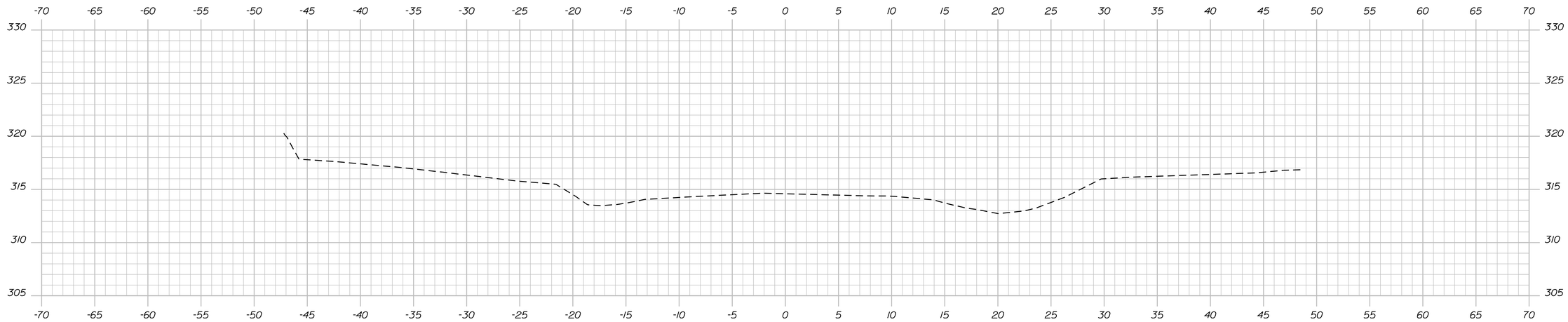

119+00.00

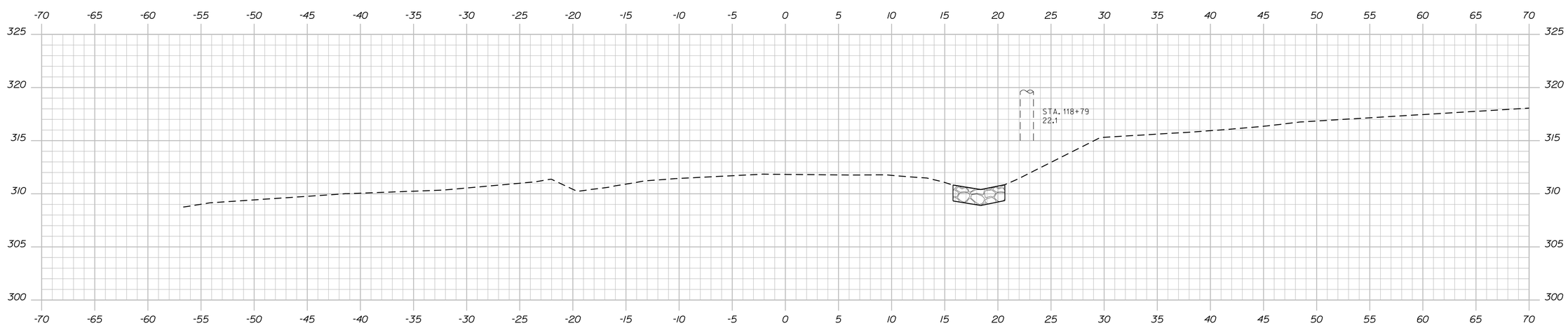

118+75.00 End Slope & Ditch Work

STATE OF MAINE
DEPARTMENT OF TRANSPORTATION

STP-2046(600)

WIN 20466.00

BRIDGE NO. 2199

BRIDGE PLANS

	BY	DATE
PROJ. MANAGER	M. Parlin	
DESIGN-DETAILED	G. Gustafson	Mar. 2016
CHECKED-REVIEWED	D. Damren	
DESIGN2-DETAILED2		
DESIGN3-DETAILED3		
REVISIONS 1		
REVISIONS 2		
REVISIONS 3		
REVISIONS 4		
FIELD CHANGES		

SIGNATURE

P.E. NUMBER

DATE

CROCKETT BRIDGE
MUDDY RIVER
NAPLES CUMBERLAND COUNTY

CROSS SECTIONS

SHEET NUMBER

25

OF 44

Sta. 118+75.00 to Sta. 119+00.00

Filename: ...\MSTA\025_Xsect_118+75_003.dgn Division: BRIDGE Username: dana.damren Date:4/4/2016

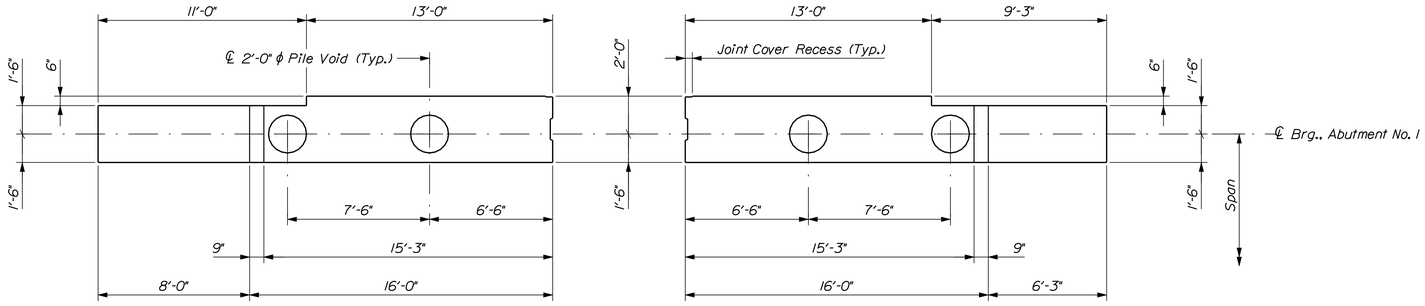

PRECAST ABUTMENT NO. 1 PLAN

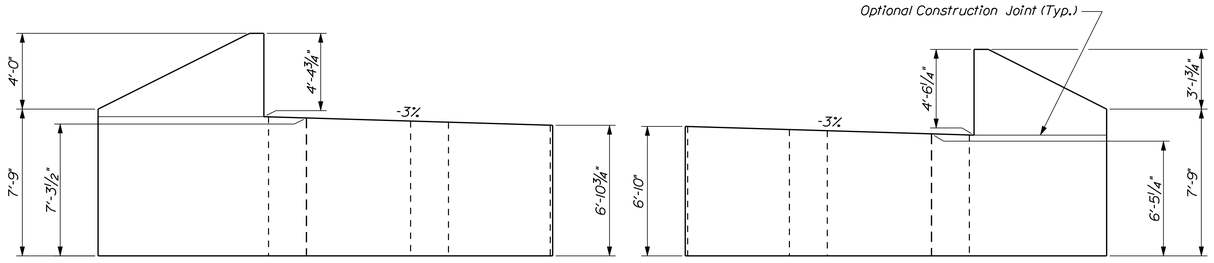

PRECAST ABUTMENT NO. 1 ELEVATION

PRECAST ABUTMENT NOTES

1. The construction, handling, and assembly of the Precast Abutments shall be in accordance with Special Provision Section 534, Precast Structural Concrete - Precast Abutment & Approach Slab, and with the Manufacturer's specifications as applicable.

2. Reinforcing steel shall have a minimum concrete cover of 2 inches unless otherwise noted.

3. Place 4-in. diameter drains in abutments and wingwalls at 10 feet maximum spacing and to clear the finished front fill slope. The exact location shall be shown on the shop drawings.

4. The pile voids shall be formed with galvanized steel or the bottom 6 inches of the abutment voids shall be formed with removable forms.

5. Provide a recess to accomodate a concrete Joint Cover, as shown on Standard Detail 502(01), along the back corner of the precast elements adjacent to the closure pour.

6. Provide a shear key as shown on Standard Detail 502(01) in the closure pour interface. A PVC waterstop is not required.

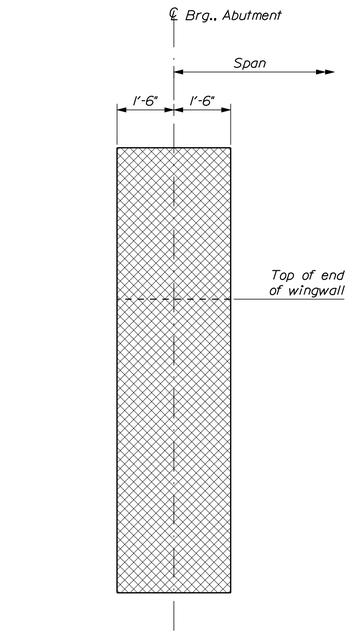

TYPICAL WINGWALL SECTION

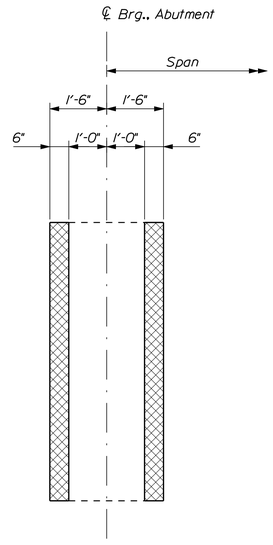

BREASTWALL SECTION
Section at center of Exterior Pile Void

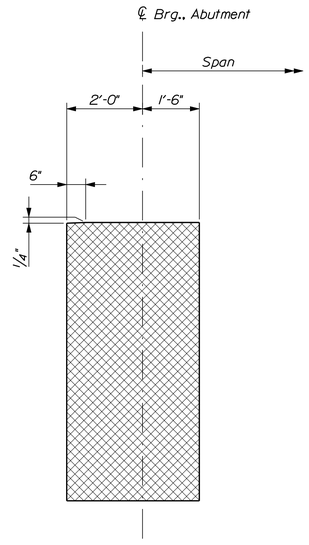

BREASTWALL SECTION
Section between Pile Voids

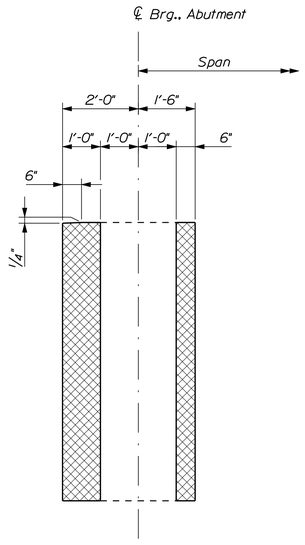

BREASTWALL SECTION
Section at center of Interior Pile Void

STATE OF MAINE
DEPARTMENT OF TRANSPORTATION

STP-2046(600)

WIN 20466.00

BRIDGE NO. 2199

BRIDGE PLANS

PROJ. MANAGER	M. Perkins		
DESIGN-DETAILED	G. Gustafson	BY	DATE
CHECKED-REVIEWED	-----	D. Domren	Mar. 2016
DESIGN2-DETAILED2	-----	-----	-----
DESIGN3-DETAILED3	-----	-----	-----
REVISIONS 1	-----	-----	-----
REVISIONS 2	-----	-----	-----
REVISIONS 3	-----	-----	-----
REVISIONS 4	-----	-----	-----
FIELD CHANGES	-----	-----	-----

SIGNATURE

P.E. NUMBER

DATE

CROCKETT BRIDGE
MUDDY RIVER
NAPLES CUMBERLAND COUNTY

PRECAST ABUTMENT NO. 1

SHEET NUMBER

26

OF 44

Filename: ...\026_Precast_Abutment No. 1.dgn Division: BRIDGE Username: dona.domren Date:4/4/2016

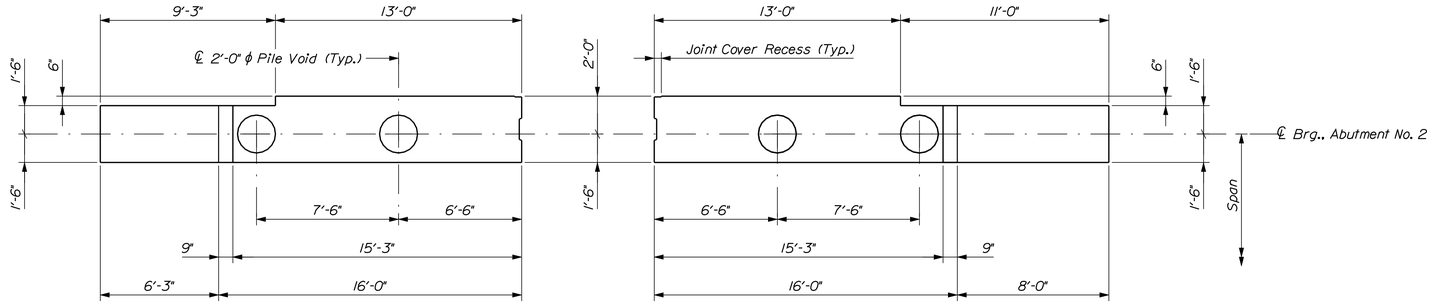

PRECAST ABUTMENT NO. 2 PLAN

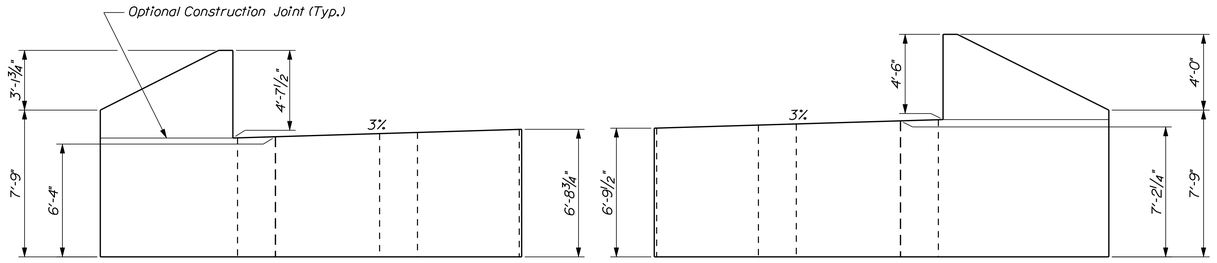

PRECAST ABUTMENT NO. 2 ELEVATION

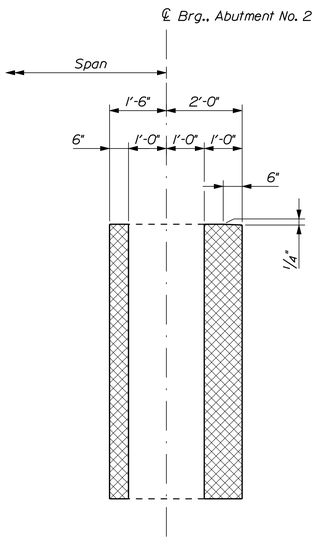

BREASTWALL SECTION
Section at center of Interior Pile Void

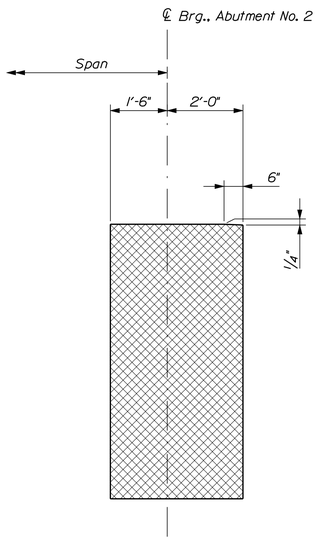

BREASTWALL SECTION
Section between Pile Voids

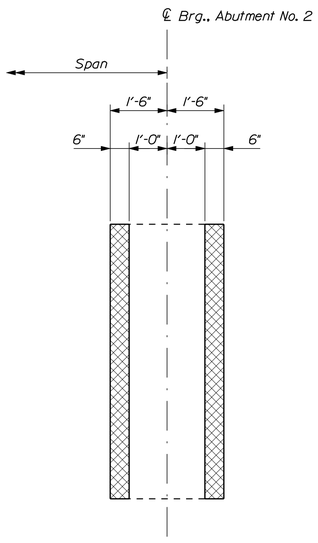

BREASTWALL SECTION
Section at center of Exterior Pile Void

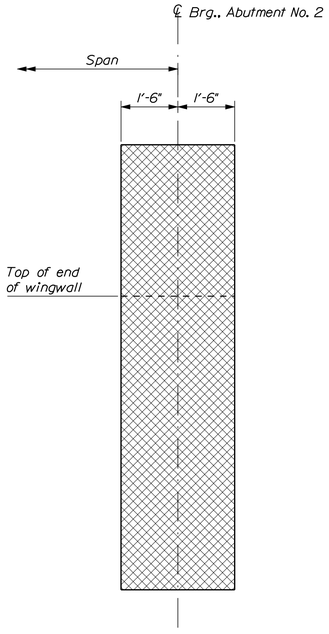

TYPICAL WINGWALL SECTION

Filename: ...\027_Precast_Abutment No. 2.dgn Division: BRIDGE Username: dona.domren Date:4/4/2016

STATE OF MAINE
DEPARTMENT OF TRANSPORTATION

STP-2046(600)

WIN 20466.00

BRIDGE NO. 2199

BRIDGE PLANS

PROJ. MANAGER	M. Perlin	BY	DATE
DESIGN-DETAILED	G. Gustafson	D. Domren	Mar. 2016
CHECKED-REVIEWED	------	------	------
DESIGN2-DETAILED2	------	------	------
DESIGN3-DETAILED3	------	------	------
REVISIONS 1	------	------	------
REVISIONS 2	------	------	------
REVISIONS 3	------	------	------
REVISIONS 4	------	------	------
FIELD CHANGES	------	------	------

SIGNATURE

P.E. NUMBER

DATE

CROCKETT BRIDGE
MUDDY RIVER
NAPLES CUMBERLAND COUNTY

PRECAST ABUTMENT NO. 2

SHEET NUMBER

27

OF 44

Filename: ...\028_Precast Abutment Reinforcing Layout.dgn BRIDGE Division
Username: dana.damren Date:4/4/2016

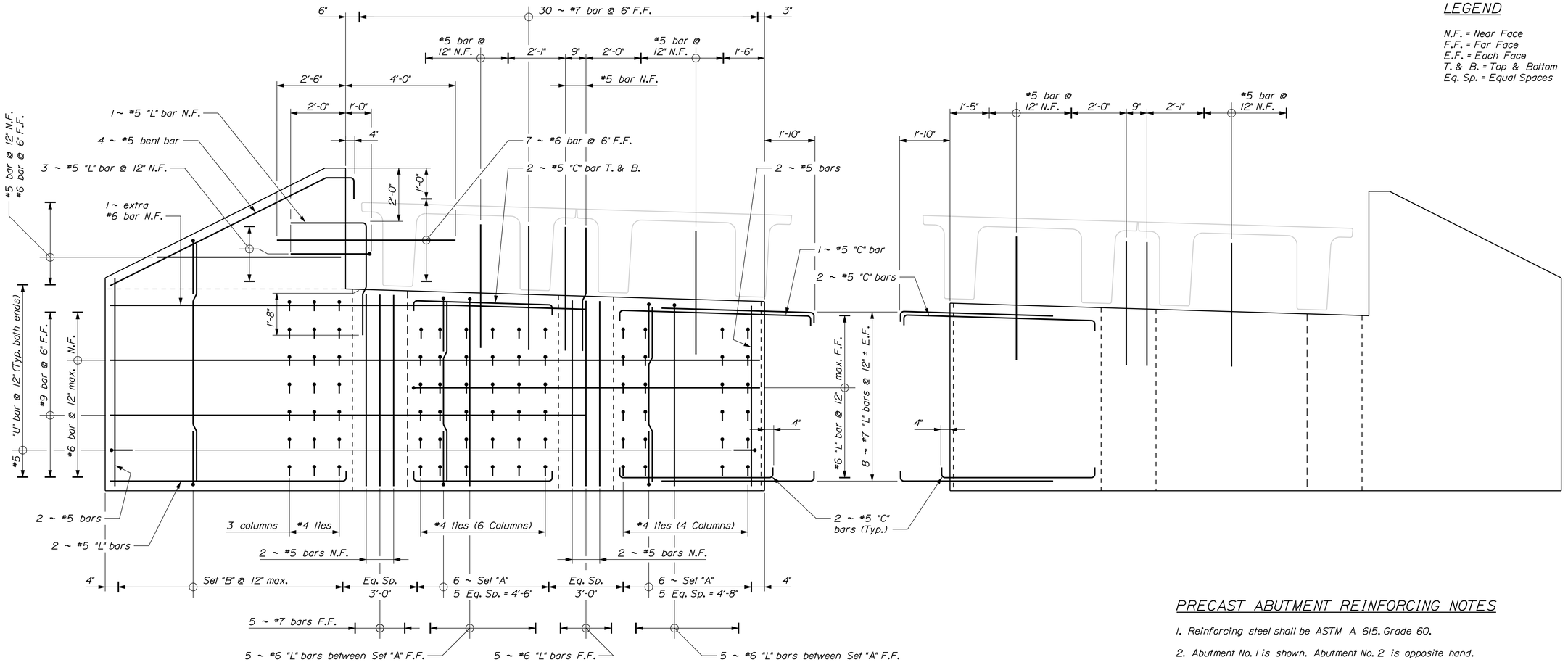

PRECAST ABUTMENT ~ ELEVATION OF REINFORCING

LEGEND

N.F. = Near Face
F.F. = Far Face
E.F. = Each Face
T. & B. = Top & Bottom
Eq. Sp. = Equal Spaces

PRECAST ABUTMENT REINFORCING NOTES

1. Reinforcing steel shall be ASTM A 615, Grade 60.
2. Abutment No. 1 is shown. Abutment No. 2 is opposite hand.
3. Reinforcing is typical for each abutment element except as shown.
4. Place #4 ties at 12" ± spacing vertically and horizontally.
5. Place #4 ties at pile voids on the side of Set "A" or "B" closest to the void.

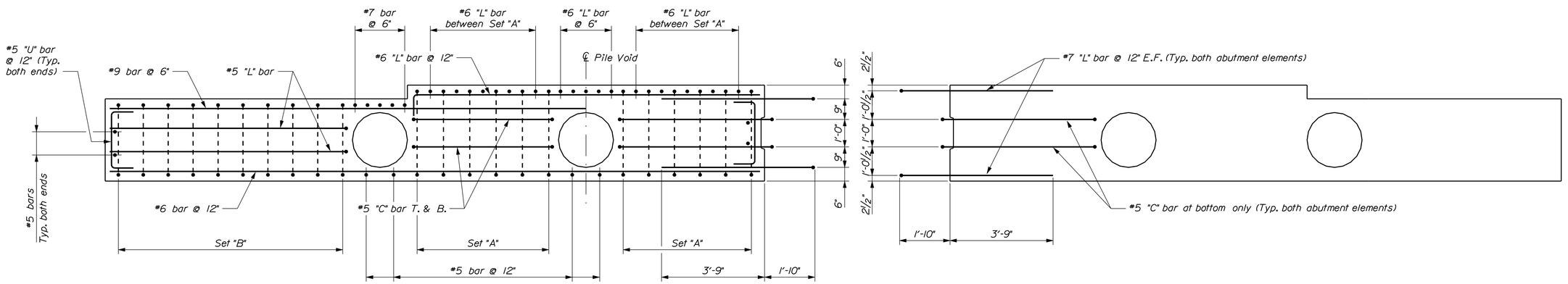

PRECAST ABUTMENT ~ HORIZONTAL SECTION OF LOWER REINFORCING

STATE OF MAINE
DEPARTMENT OF TRANSPORTATION

STP-2046(600)

WIN 20466.00

BRIDGE NO. 2199

BRIDGE PLANS

PROJ. MANAGER	M. Perlin	BY	DATE
DESIGN-DETAILED	G. Gustafson	D. Damren	Mar. 2016
CHECKED-REVIEWED	-----	-----	-----
DESIGN2-DETAILED2	-----	-----	-----
DESIGN3-DETAILED3	-----	-----	-----
REVISIONS 1	-----	-----	-----
REVISIONS 2	-----	-----	-----
REVISIONS 3	-----	-----	-----
REVISIONS 4	-----	-----	-----
FIELD CHANGES	-----	-----	-----

SIGNATURE

P.E. NUMBER

DATE

CROCKETT BRIDGE
MUDDY RIVER
NAPLES CUMBERLAND COUNTY

PRECAST ABUT. REINFORCING

SHEET NUMBER

28

OF 44

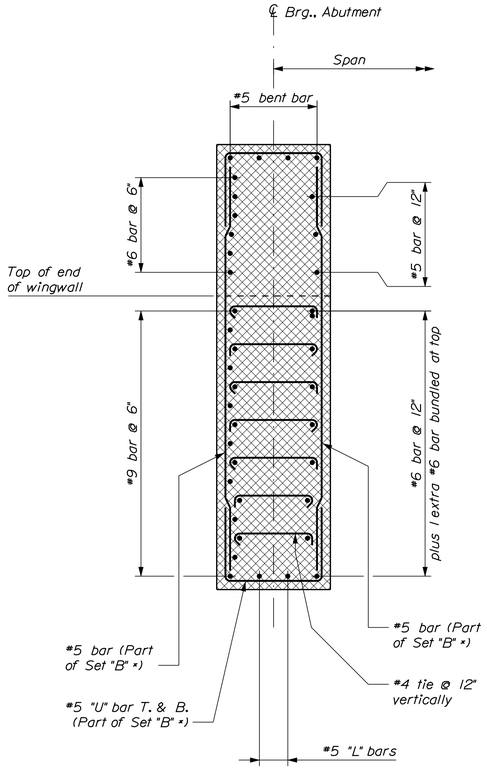

SECTION THROUGH WINGWALL

* Set "B" consists of 2 ~ #5 vertical bars (1 E.F.) and 2 ~ #5 "U" bars (1 top and 1 bottom)

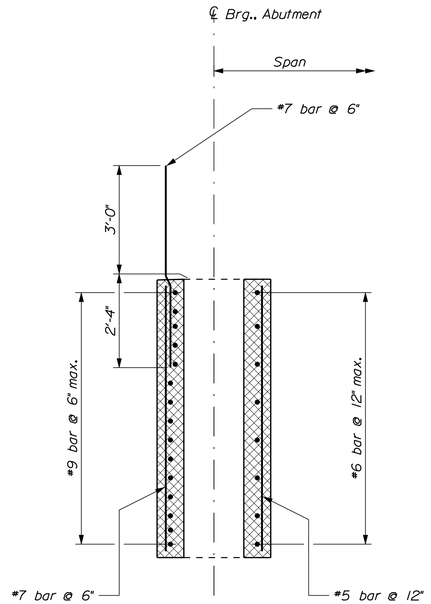

SECTION THROUGH EXTERIOR PILE VOID

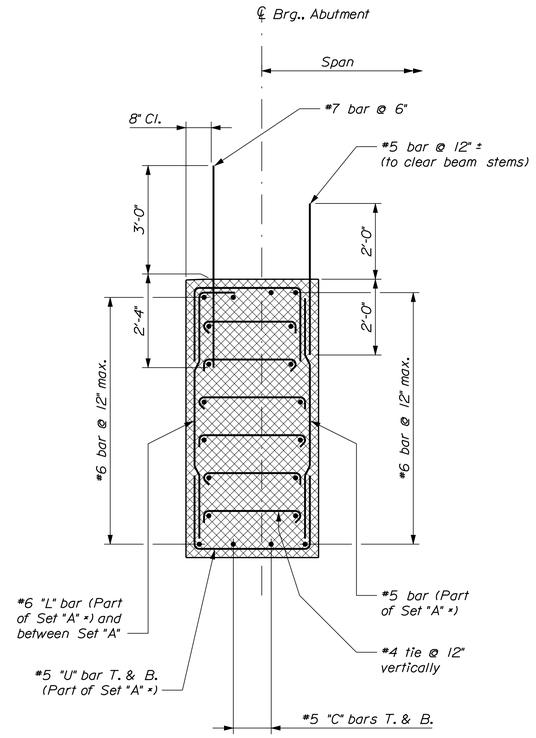

SECTION BETWEEN PILE VOIDS

* Set "A" consists of 1 ~ #5 vertical bar, 1 ~ #6 vertical "L" bar and 2 ~ #5 "U" bars (1 top and 1 bottom)

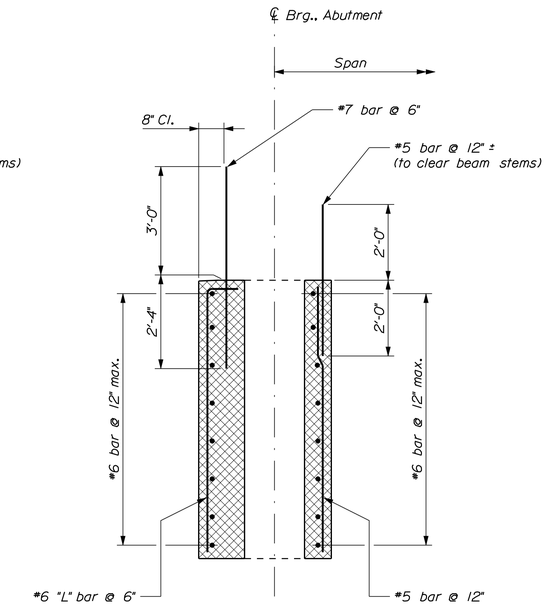

SECTION THROUGH INTERIOR PILE VOID

LEGEND

N.F. = Near Face
F.F. = Far Face
E.F. = Each Face
T. & B. = Top & Bottom
Eq. Sp. = Equal Spaces

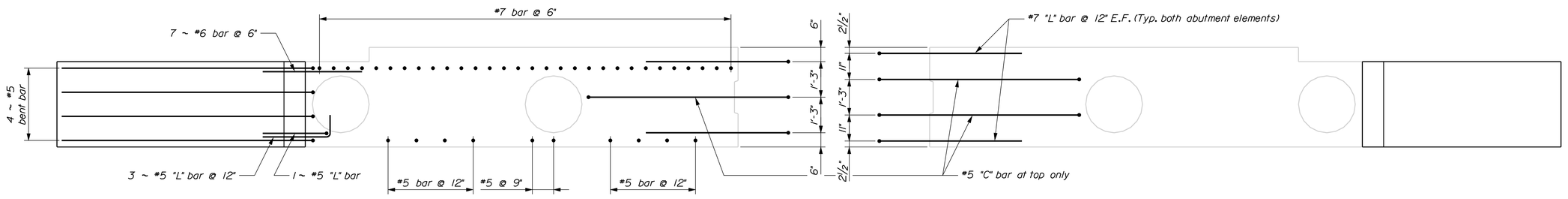

PRECAST ABUTMENT ~ TOP VIEW OF UPPER REINFORCING

Showing only those bars which project from the precast elements

STATE OF MAINE
DEPARTMENT OF TRANSPORTATION

STP-2046(600)

BRIDGE NO. 2199 WIN 20466.00 BRIDGE PLANS

		BY	DATE
PROJ. MANAGER	M. Parlin		
DESIGN-DETAILED	G. Gustafson	D. Damren	Mar. 2016
CHECKED-REVIEWED			
DESIGN2-DETAILED2			
DESIGN3-DETAILED3			
REVISIONS 1			
REVISIONS 2			
REVISIONS 3			
REVISIONS 4			
FIELD CHANGES			

SIGNATURE

P.E. NUMBER

DATE

CROCKETT BRIDGE
MUDDY RIVER
NAPLES CUMBERLAND COUNTY

PRECAST ABUT. REINF. SECTIONS

SHEET NUMBER

29

OF 44

Filename: ...\029_Precast_Abutment Reinforcing Sections.dgn Date:4/4/2016 Username: dana.damren

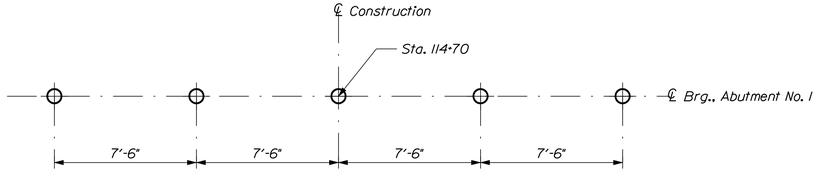

ABUTMENT NO. 1 SPUN PIPE PILE LAYOUT

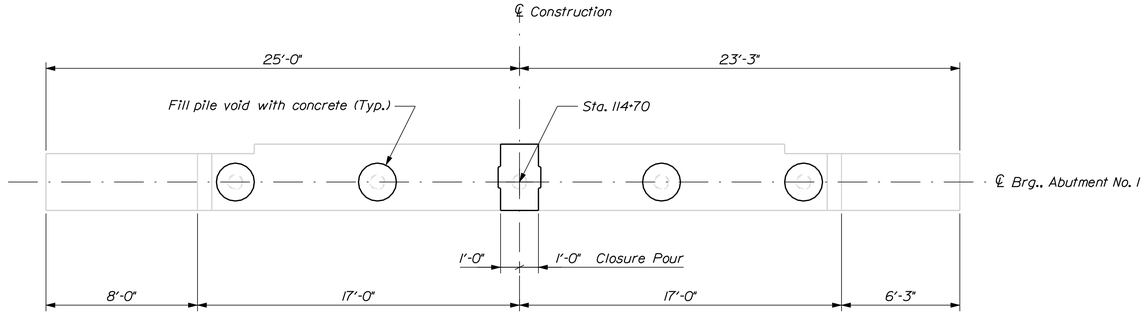

ABUTMENT NO. 1 PLAN

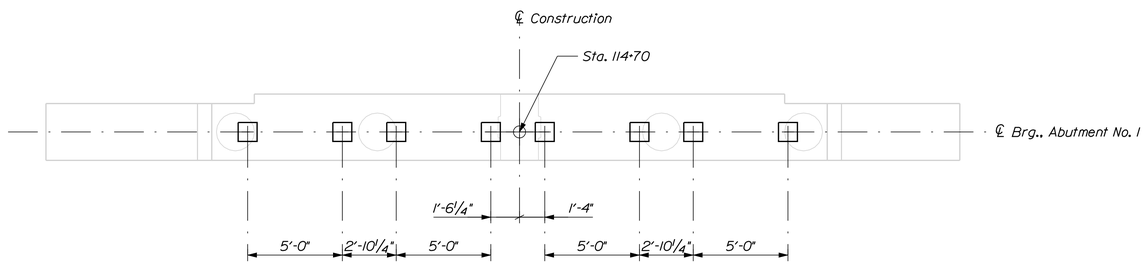

ABUTMENT NO. 1 BEARING PAD LAYOUT

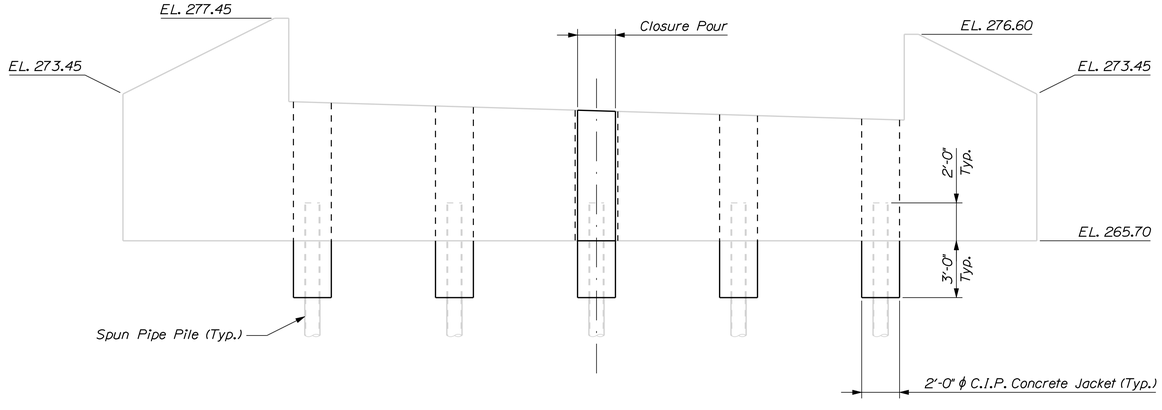

ABUTMENT NO. 1 ELEVATION

SPUN PIPE PILE NOTES

1. The spun pipe pile shall consist of a steel pile casing filled with grout. No internal reinforcing steel is required.

2. Construct spun pipe piles in accordance with Special Provisions Section 501, Foundation Piles - Spun Pipe Piles.

3. The spun pipe piles are designed to support a maximum factored Strength Limit State compressive axial load of 365 kips per pile and 0 kips per pile in tension.

4. The pile casing shall be in accordance with Special Provisions Section 501, Foundation Piles - Spun Pipe Piles or approved equal.

5. The pile casing shall have a 9.625 inch outside diameter and a 0.545 inch thick wall.

6. Spun pipe piles shall be constructed plumb.

7. Spun pipe piles shall be drilled 5 feet into competent bedrock under observation of the Geotechnical Engineer.

8. Estimate of Spun Pipe Piles required:

Abutment No. 1: 5 ~ Spun Pipe Piles @ 22 feet.
Abutment No. 2: 5 ~ Spun Pipe Piles @ 41 feet.

STATE OF MAINE
DEPARTMENT OF TRANSPORTATION

STP-2046(600)

WIN 20466.00

BRIDGE NO. 2199

BRIDGE PLANS

	BY	DATE
PROJ. MANAGER	M. Perkins	
DESIGN-DETAILED	G. Gustafson	Mar. 2016
CHECKED-REVIEWED	D. Domren	-----
DESIGN2-DETAILED2	-----	-----
DESIGN3-DETAILED3	-----	-----
REVISIONS 1	-----	-----
REVISIONS 2	-----	-----
REVISIONS 3	-----	-----
REVISIONS 4	-----	-----
FIELD CHANGES	-----	-----

SIGNATURE

P.E. NUMBER

DATE

CROCKETT BRIDGE
MUDDY RIVER
NAPLES CUMBERLAND COUNTY

ABUTMENT NO. 1

SHEET NUMBER

30

OF 44

Filename: ...\MSTA\030_Abutment_No. 1.dgn Division: BRIDGE Username: dona.domren Date:4/4/2016

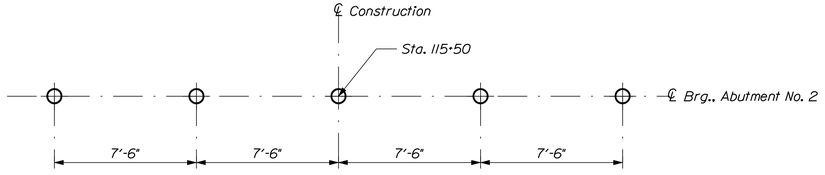

ABUTMENT NO. 2 SPUN PIPE PILE LAYOUT

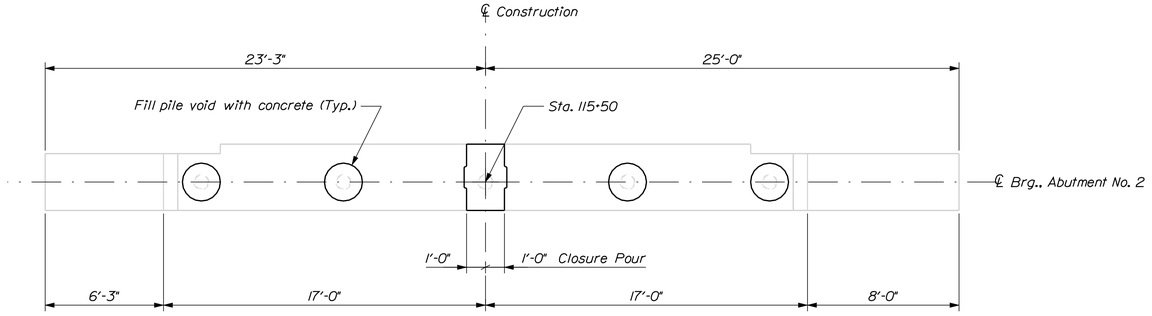

ABUTMENT NO. 2 PLAN

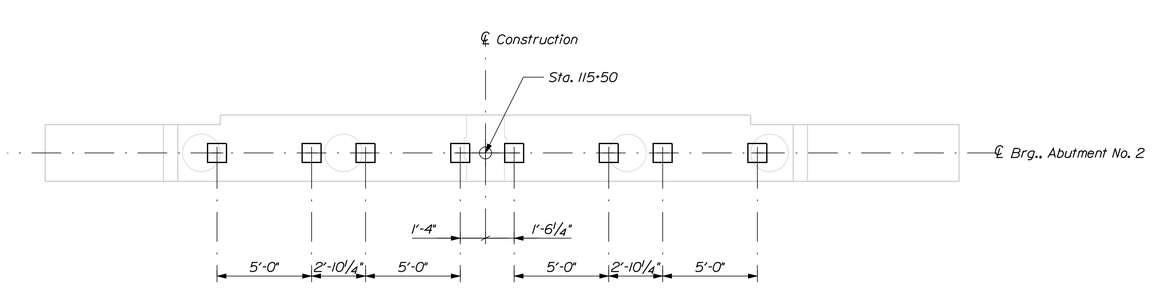

ABUTMENT NO. 2 BEARING PAD LAYOUT

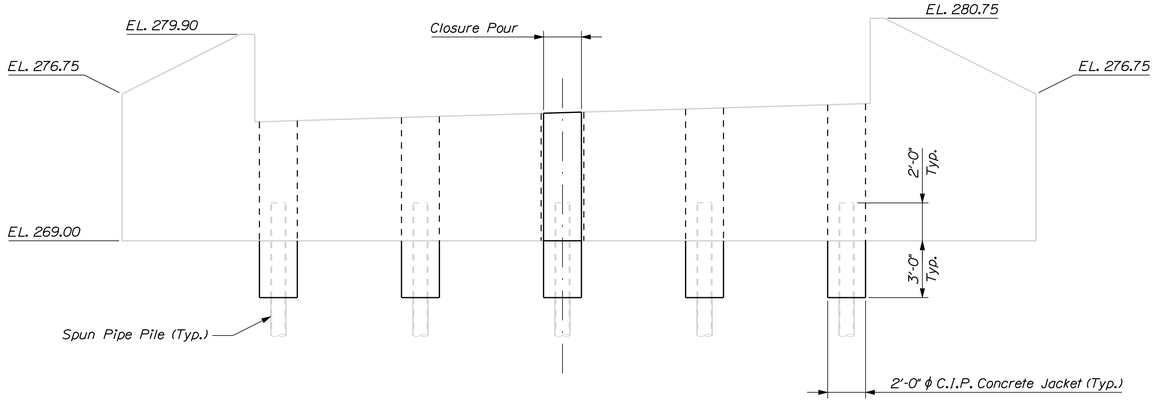

ABUTMENT NO. 2 ELEVATION

ABUTMENT NOTES

1. The precast concrete abutment elements shall be set at an elevation adjusted in accordance with Special Provision Section 535, Precast, Prestressed Concrete Superstructure - Camber.

2. Reinforcing steel shall have a minimum concrete cover of 2 inches unless otherwise noted.

3. Cover joints where waterstops are not required in accordance with Standard Details Section 502.

4. Install drainage geocomposite behind the abutments and wingwalls up to the approach slab seat elevation and in accordance with Special Provision Section 620, Drainage Geocomposite.

5. Structural Earth Excavation, Abutments and Retaining Walls, required more than 12 inches below the bottom of the structure, will be paid for in accordance with Standard Specifications Section 206, Structural Excavation, except that payment for excavation necessary to construct the concrete pile jackets will be considered incidental to related Contract items. No separate payment will be made.

6. Payment for the concrete jackets around the tops of the spun pipe piles will be considered incidental to related Contract items. No separate payment will be made. Fill concrete may be used for the concrete jackets.

7. Abutments and wingwalls shall be backfilled with Granular Borrow for Underwater Backfill. Pay limits will be as shown on the Profile.

8. Concrete in the precast abutment pile voids and closure pours shall be placed and reach a minimum compressive strength of 2400 psi prior to backfilling or placing riprap against the abutments.

9. Concrete in the precast abutment pile voids and closure pours will be paid for under Item No. 502.219, Structural Concrete, Abutments and Retaining Walls (Cast In Place).

STATE OF MAINE
DEPARTMENT OF TRANSPORTATION

STP-2046(600)

WIN 20466.00

BRIDGE NO. 2199

BRIDGE PLANS

PROJ. MANAGER	M. Perkins			
DESIGN-DETAILED	G. Gustafson	-----	Mar. 2016	-----
CHECKED-REVIEWED	D. Domren	-----	-----	-----
DESIGN2-DETAILED2	-----	-----	-----	-----
DESIGN3-DETAILED3	-----	-----	-----	-----
REVISIONS 1	-----	-----	-----	-----
REVISIONS 2	-----	-----	-----	-----
REVISIONS 3	-----	-----	-----	-----
REVISIONS 4	-----	-----	-----	-----
FIELD CHANGES	-----	-----	-----	-----

SIGNATURE

P.E. NUMBER

DATE

CROCKETT BRIDGE
MUDDY RIVER
NAPLES CUMBERLAND COUNTY

ABUTMTENT NO. 2

SHEET NUMBER

31

OF 44

Filename: ...\MSTA\031_Abutment_No. 2.dgn Username: dana.domren Division: BRIDGE Date:4/4/2016

LEGEND

N.F. = Near Face
F.F. = Far Face
E.F. = Each Face
T. & B. = Top & Bottom
Eq. Sp. = Equal Spaces

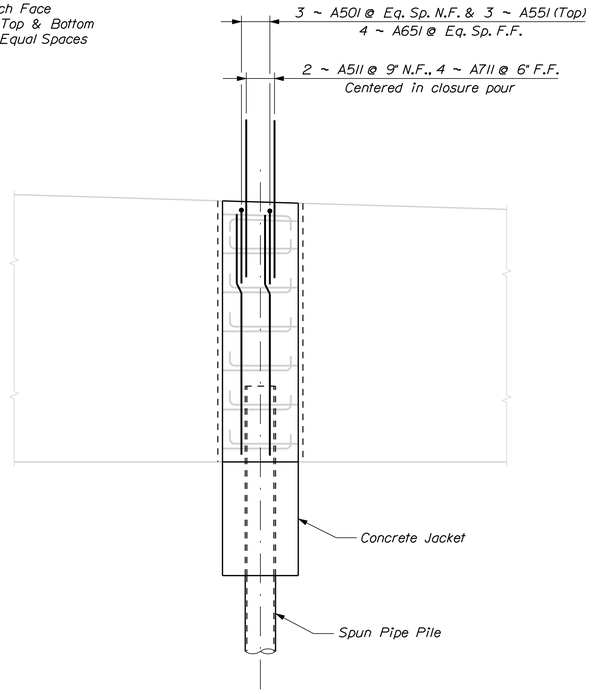

CLOSURE POUR REINFORCING ELEVATION

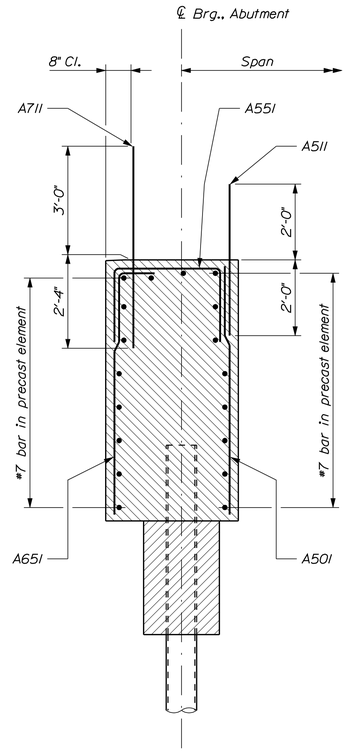

SECTION THROUGH CLOSURE POUR

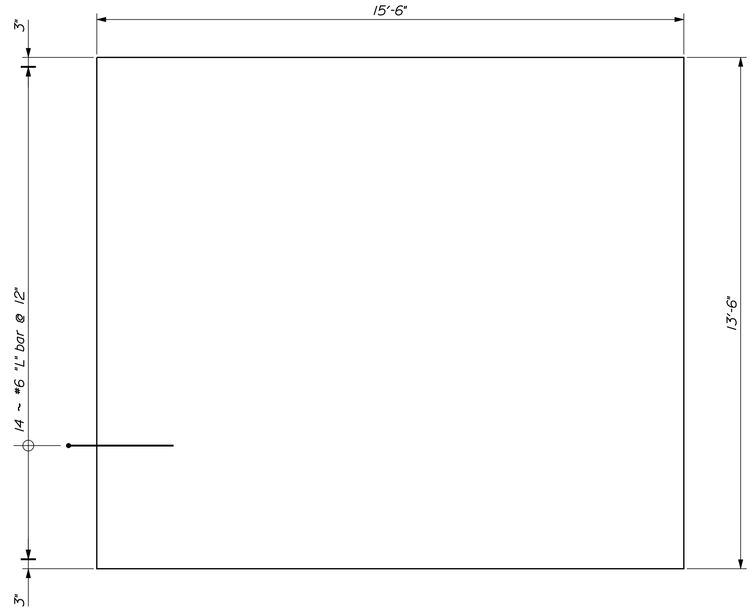

PRECAST APPROACH SLAB PLAN

4 Approach Slabs as shown are required (2 at each abutment)
Refer to Standard Detail 502(02) for information and reinforcing not shown

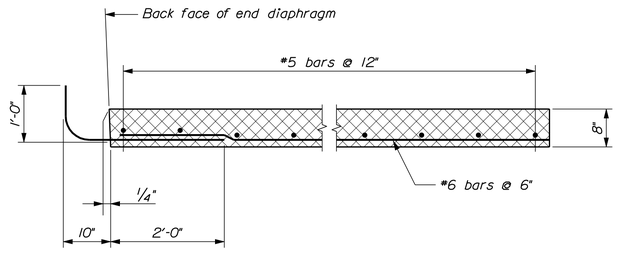

PRECAST APPROACH SLAB SECTION

STATE OF MAINE
DEPARTMENT OF TRANSPORTATION

STP-2046(600)

WIN 20466.00
BRIDGE NO. 2199

BRIDGE PLANS

		BY	DATE
PROJ. MANAGER	M. Perlin		
DESIGN-DETAILED	G. Gustafson	D. Domren	Mar. 2016
CHECKED-REVIEWED	-----	-----	-----
DESIGN2-DETAILED2	-----	-----	-----
DESIGN3-DETAILED3	-----	-----	-----
REVISIONS 1	-----	-----	-----
REVISIONS 2	-----	-----	-----
REVISIONS 3	-----	-----	-----
REVISIONS 4	-----	-----	-----
FIELD CHANGES	-----	-----	-----

SIGNATURE

P.E. NUMBER

DATE

CROCKETT BRIDGE
MUDDY RIVER
NAPLES CUMBERLAND COUNTY

ABUTMENT DETAILS

SHEET NUMBER
32
OF 44

Filename: ...\MSTA\032_Abutment_Details.dgn Division: BRIDGE Username: dona.domren Date:4/4/2016

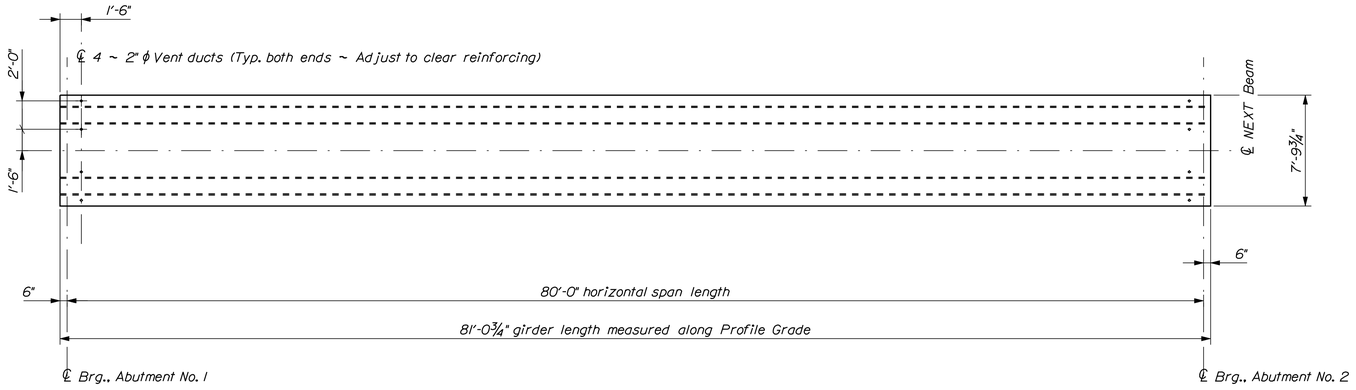

NEXT 36 F BEAM PLAN

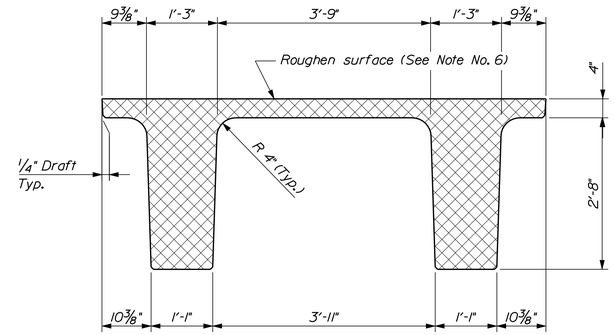

NEXT 36 F BEAM SECTION

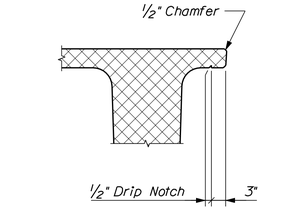

FASCIA OVERHANG DETAIL

PRECAST CONCRETE SUPERSTRUCTURE NOTES

1. NEXT F Beams are a non - proprietary shape developed by PCI NORTHEAST (PCINE). Standardized section properties and details may be found at http://www.pcine.org.

2. The estimated camber at release is 2.0 inches and the estimated camber at erection is 2⅞ inches. Refer to Special Provision Section 535, Precast, Prestressed Concrete Superstructure - Camber.

3. Prestressing strands shall be 0.6 inch diameter. The tensioning force is 44 kips per prestressing strand, including the top strands.

4. Reinforcing steel shall have a minimum concrete cover of 2 inches unless otherwise noted.

5. The drilling of holes in the prestressed beams and the use of power - actuated tools on the beams will not be permitted.

6. The top surface of the upper flange of the prestressed beams shall be raked to a surface roughness of ±¼ inch, except at 10-ft. increments along the centerline of each beam. At these locations a flattened area of sufficient size shall be left to facilitate taking elevations for setting bottom of slab elevations.

7. A maximum of 50 percent of the strands in the bottom 5 rows may be debonded 6 inches from the end of the beam. All 4 top row strands shall be fully bonded.

8. A mat of mild reinforcing steel, #4 bars @ 12 inches in both directions, may be substituted for the welded wire fabric. Reinforcing steel shall be ASTM A 615, Grade 60.

ELASTOMERIC BEARING PAD NOTES

1. Elastomeric Bearing Pads shall be 12 inches by 12 inches in plan and 1¼ inches tall.

2. The elastomer shall have a shear modulus of 260 psi +/- 15% and a Shore A Durometer hardness of 70.

3. Elastomeric Bearing Pads shall conform to the requirements of the latest edition of the AASHTO LRFD Bridge Construction Specifications, Section 18.2.

STATE OF MAINE
DEPARTMENT OF TRANSPORTATION

STP-2046(600)

WIN 20466.00

BRIDGE NO. 2199

BRIDGE PLANS

PROJ. MANAGER	M. Perkins			
DESIGN-DETAILED	G. Gustafson	BY	DATE	SIGNATURE
CHECKED-REVIEWED	-----	D. Domren	Mar. 2016	-----
DESIGN2-DETAILED2	-----	-----	-----	-----
DESIGN3-DETAILED3	-----	-----	-----	P.E. NUMBER
REVISIONS 1	-----	-----	-----	-----
REVISIONS 2	-----	-----	-----	-----
REVISIONS 3	-----	-----	-----	DATE
REVISIONS 4	-----	-----	-----	-----
FIELD CHANGES	-----	-----	-----	-----

CROCKETT BRIDGE
MUDDY RIVER
NAPLES CUMBERLAND COUNTY

PRECAST NEXT BEAM

SHEET NUMBER

33

OF 44

Filename: ...\MSTA\033_Precast_NEXT Beam.dgn Division: BRIDGE Username: dana.damren Date:4/4/2016

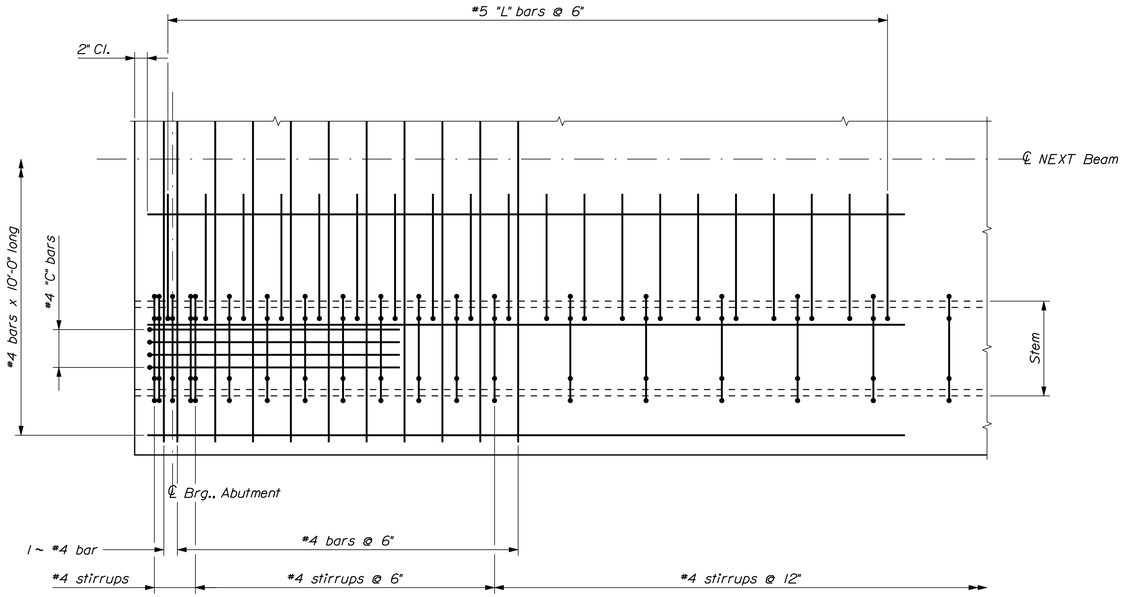

NEXT F BEAM PART REINFORCING PLAN

Welded wire fabric, prestressing strands and full-length #4 bars in stems not shown

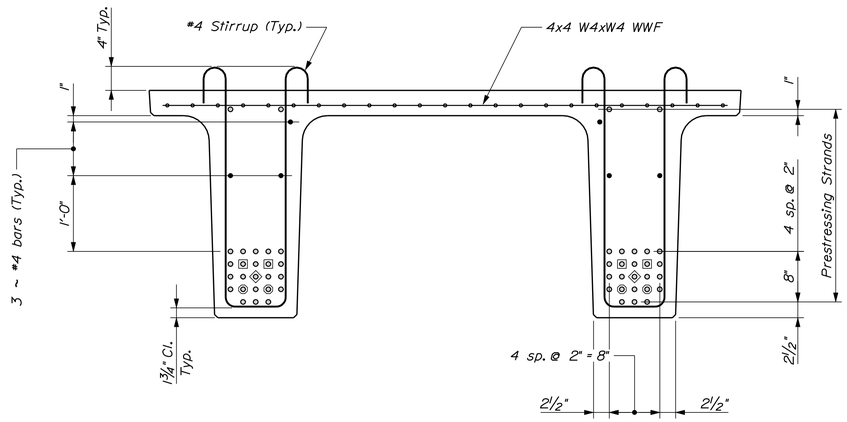

NEXT F BEAM TYPICAL REINFORCING SECTION

◎ Strands debonded 4 ft.
◈ Strands debonded 8 ft.
◎ Strands debonded 12 ft.

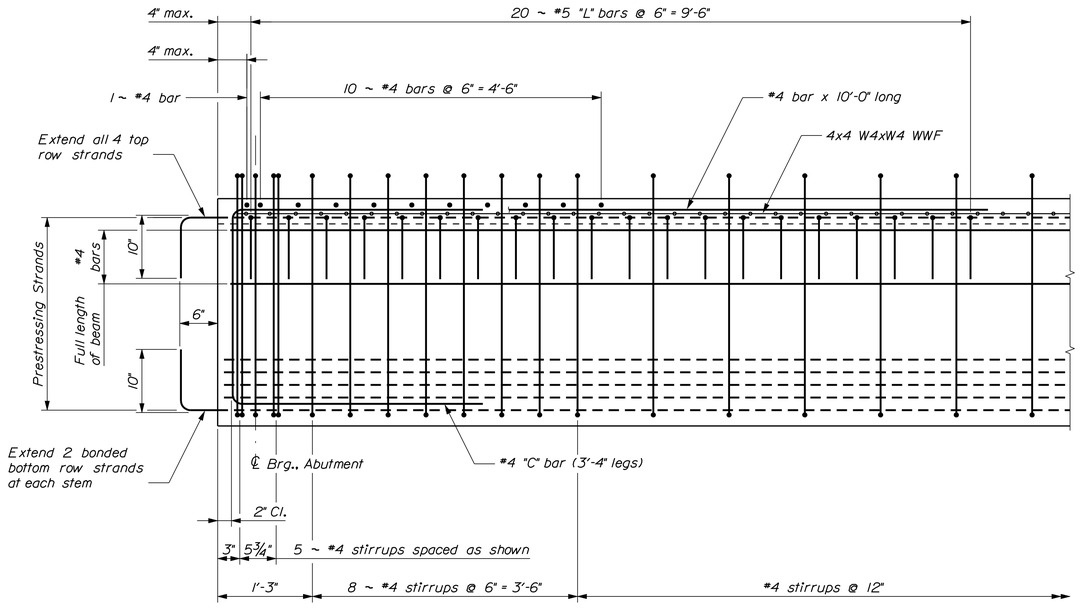

NEXT F BEAM PART REINFORCING ELEVATION

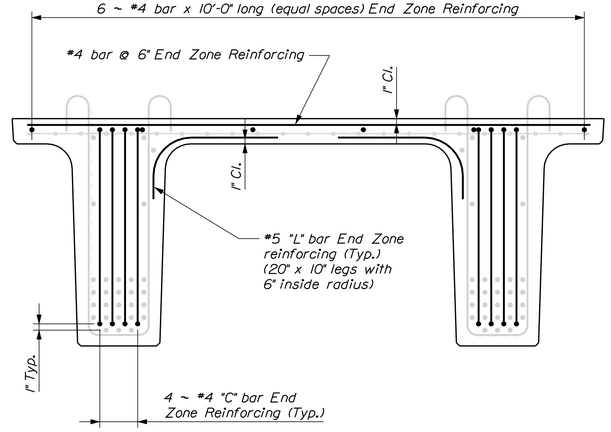

NEXT F BEAM END REINFORCING SECTION

STATE OF MAINE
DEPARTMENT OF TRANSPORTATION

STP-2046(600)

WIN 20466.00

BRIDGE NO. 2199

BRIDGE PLANS

PROJ. MANAGER	M. Perlin			
DESIGN-DETAILED	G. Gustafson	D. Domren	Mar. 2016	
CHECKED-REVIEWED	-----	-----	-----	SIGNATURE
DESIGN2-DETAILED2	-----	-----	-----	
DESIGN3-DETAILED3	-----	-----	-----	P.E. NUMBER
REVISIONS 1	-----	-----	-----	
REVISIONS 2	-----	-----	-----	
REVISIONS 3	-----	-----	-----	DATE
REVISIONS 4	-----	-----	-----	
FIELD CHANGES	-----	-----	-----	

CROCKETT BRIDGE
MUDDY RIVER
NAPLES CUMBERLAND COUNTY

PRECAST NEXT BEAM

SHEET NUMBER

34

OF 44

Filename: ...\MSTA\034_Precast_NEXT Beam.dgn Division: BRIDGE Username: dana.domren Date:4/4/2016

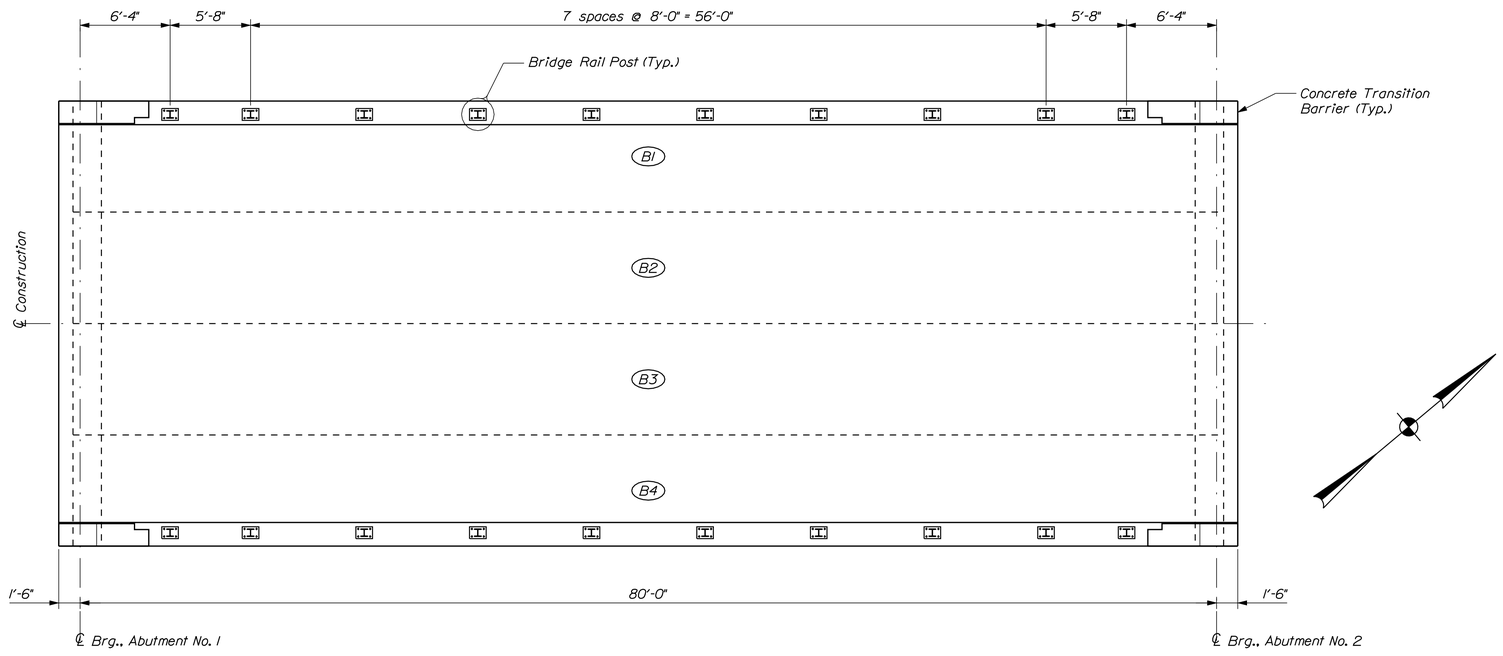

SUPERSTRUCTURE PLAN

Dimensions are horizontal

SUPERSTRUCTURE NOTES

1. The deck thickness and curb stirrup dimensions shall be adjusted in accordance with Special Provision Section 535, Precast, Prestressed Concrete Superstructure - Camber.

2. Form a one inch V-groove on the fascias at the horizontal joint between the curb and slab.

3. Reinforcing shall have a minimum concrete cover of 2 inches unless otherwise noted.

4. The superstructure slab concrete shall be placed continuously and shall be kept plastic until the entire placement, including both end diaphragms, has been made.

5. End diaphragm concrete will be paid for under Item No. 502.261, Structural Concrete Roadway and Sidewalk Slabs on Concrete Bridges.

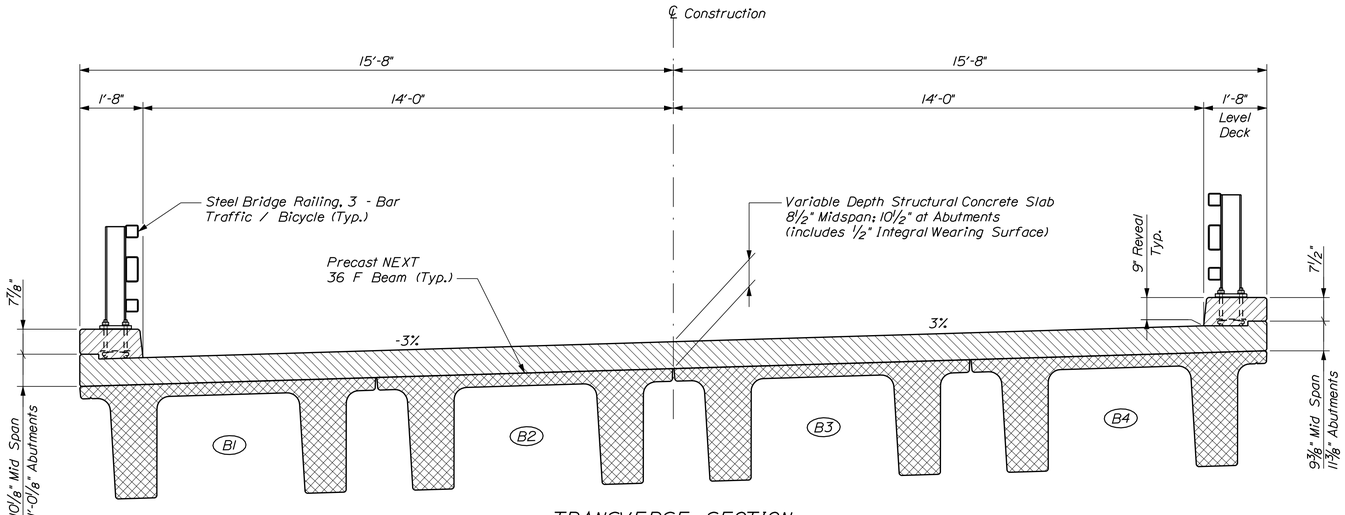

TRANSVERSE SECTION

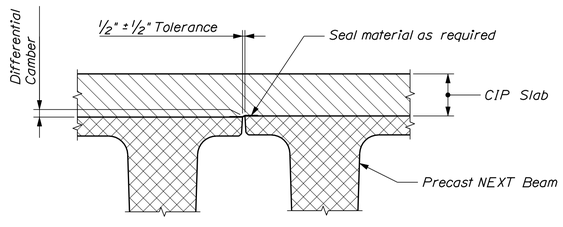

NEXT BEAM GAP FORM DETAIL

STATE OF MAINE
DEPARTMENT OF TRANSPORTATION

STP-2046(600)

WIN 20466.00

BRIDGE NO. 2199

BRIDGE PLANS

PROJ. MANAGER	M. Perlin		
DESIGN-DETAILED	G. Gustafson	D. Domren	Mar. 2016
CHECKED-REVIEWED	-----	-----	-----
DESIGN2-DETAILED2	-----	-----	-----
DESIGN3-DETAILED3	-----	-----	-----
REVISIONS 1	-----	-----	-----
REVISIONS 2	-----	-----	-----
REVISIONS 3	-----	-----	-----
REVISIONS 4	-----	-----	-----
FIELD CHANGES	-----	-----	-----

SIGNATURE

P.E. NUMBER

DATE

CROCKETT BRIDGE
MUDDY RIVER
NAPLES CUMBERLAND COUNTY

SUPERSTRUCTURE

SHEET NUMBER

35

OF 44

Filename: ...\MSTA\035_Superstructure.dgn Division: BRIDGE Username: dona.domren Date:4/4/2016

Filename: ...\036_Superstructure_Reinforcing.dgn Division: BRIDGE Username: dana.damren Date:4/4/2016

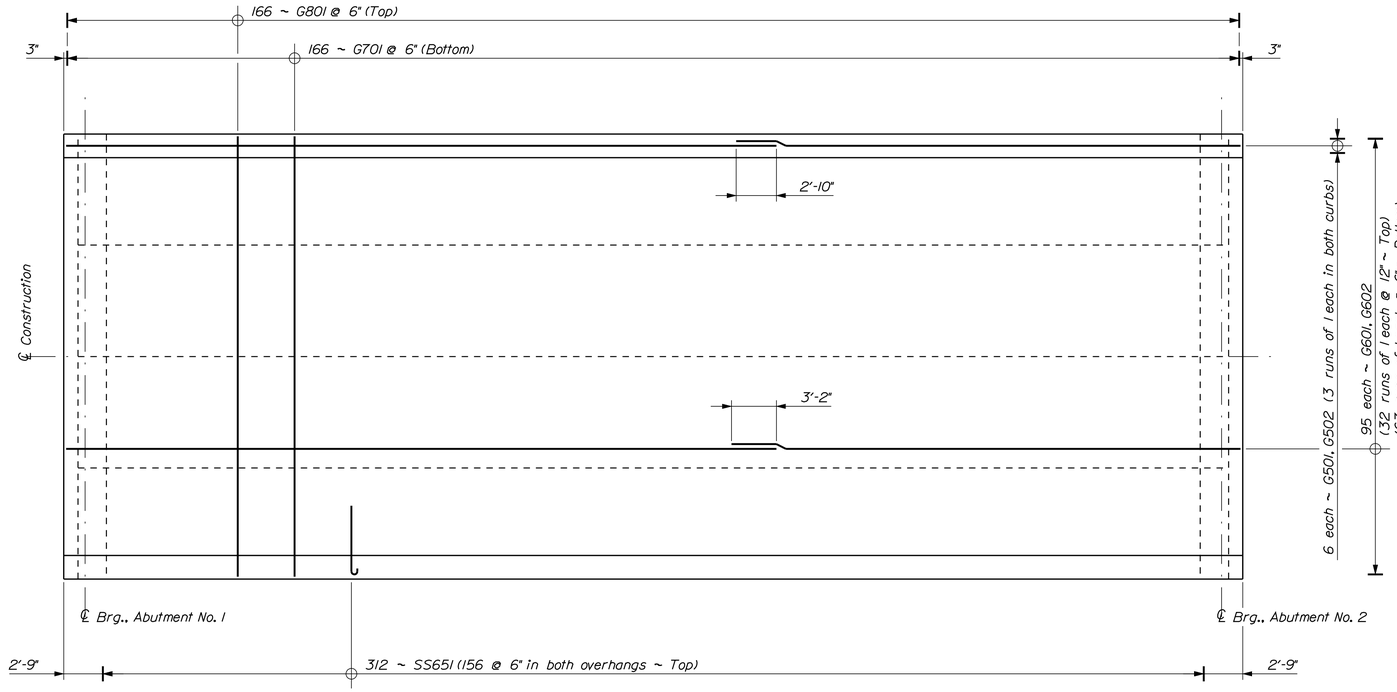

SUPERSTRUCTURE REINFORCING PLAN

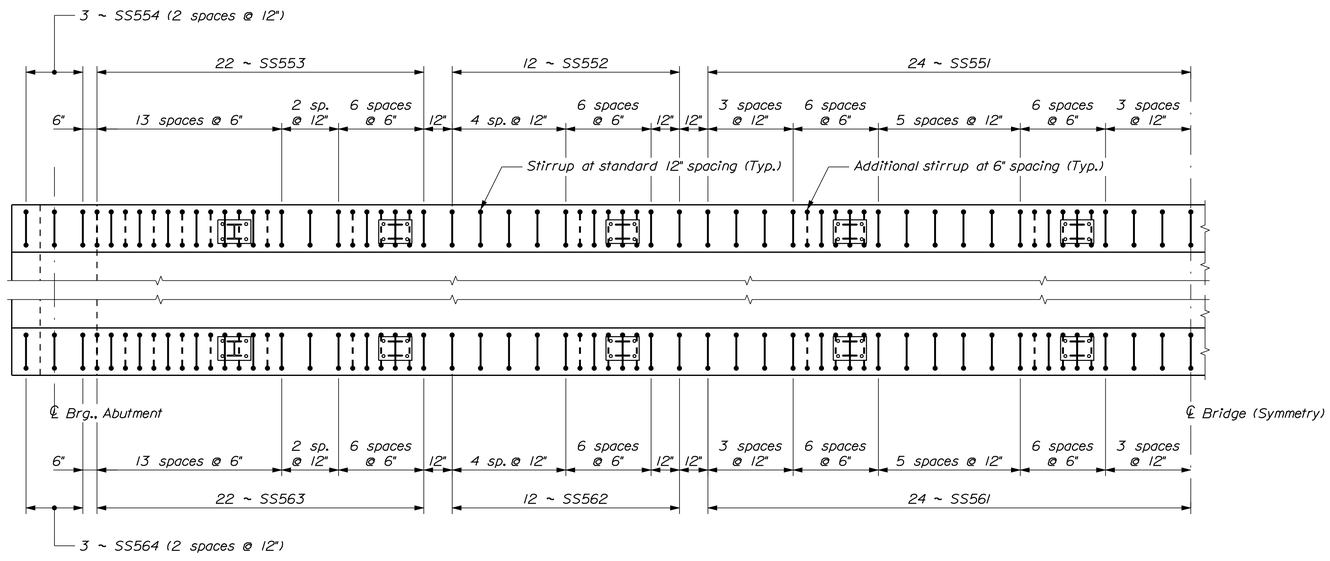

CURB STIRRUP HALF LAYOUT PLAN

STATE OF MAINE
DEPARTMENT OF TRANSPORTATION

STP-2046(600)

WIN 20466.00

BRIDGE NO. 2199 BRIDGE PLANS

PROJ. MANAGER	M. Perlin	BY	DATE
DESIGN-DETAILED	G. Gustafson	D. Damren	Mar. 2016
CHECKED-REVIEWED	------	------	------
DESIGN2-DETAILED2	------	------	------
DESIGN3-DETAILED3	------	------	------
REVISIONS 1	------	------	------
REVISIONS 2	------	------	------
REVISIONS 3	------	------	------
REVISIONS 4	------	------	------
FIELD CHANGES	------	------	------

SIGNATURE

P.E. NUMBER

DATE

CROCKETT BRIDGE
MUDDY RIVER
CUMBERLAND COUNTY
NAPLES

SUPERSTURCTURE REINF.

SHEET NUMBER

36

OF 44

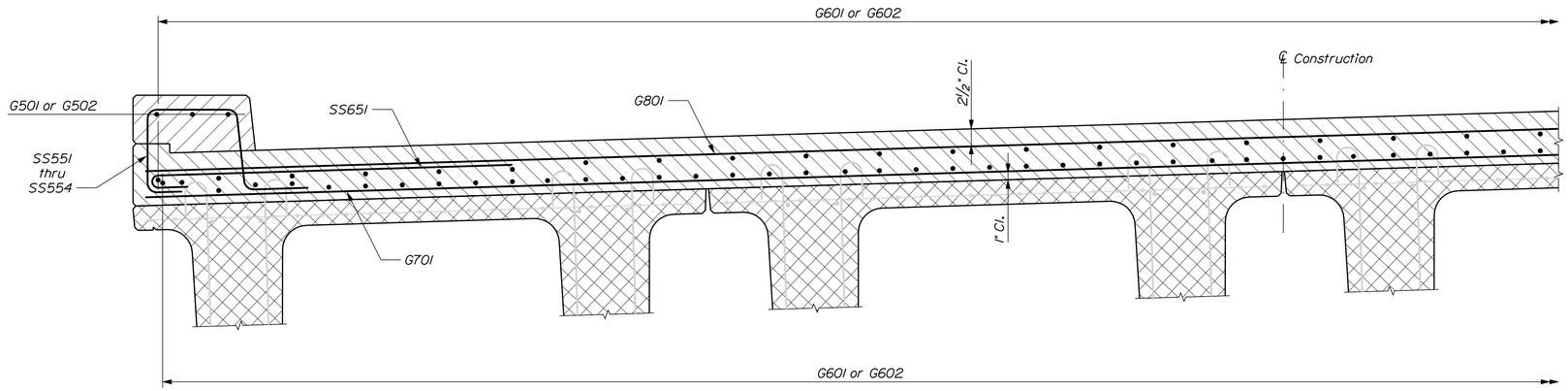

HALF UPSTREAM DECK REINFORCING SECTION

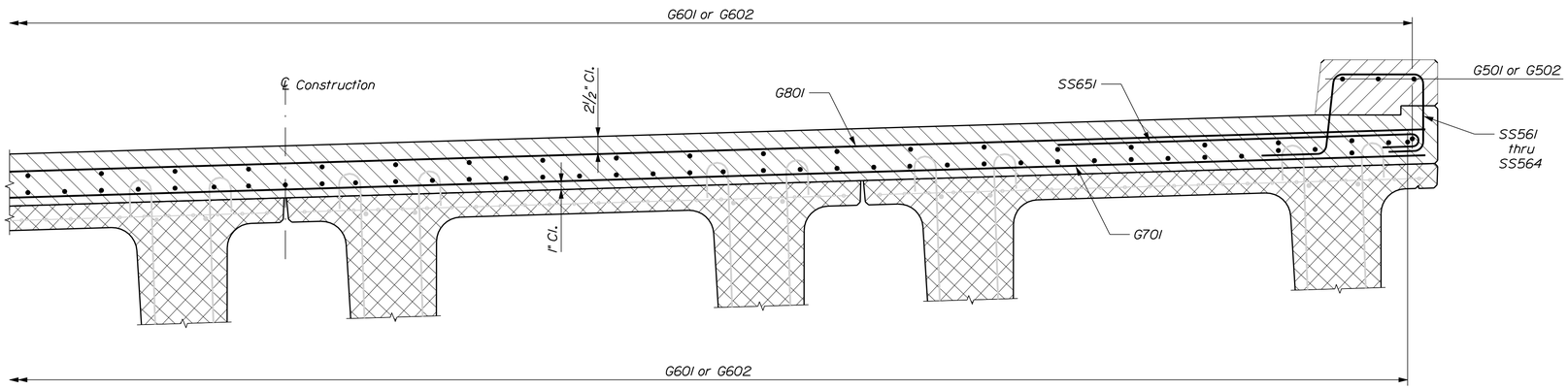

HALF DOWNSTREAM DECK REINFORCING SECTION

Filename: ...\037_Superstructure_Reinforcing.dgn Division: BRIDGE Username: dona.domren Date:4/4/2016

STATE OF MAINE
DEPARTMENT OF TRANSPORTATION

STP-2046(600)

WIN 20466.00

BRIDGE NO. 2199

BRIDGE PLANS

	BY	DATE
PROJ. MANAGER	M. Parlin	
DESIGN-DETAILED	G. Gustafson	Mar. 2016
CHECKED-REVIEWED	D. Domren	-----
DESIGN2-DETAILED2	-----	-----
DESIGN3-DETAILED3	-----	-----
REVISIONS 1	-----	-----
REVISIONS 2	-----	-----
REVISIONS 3	-----	-----
REVISIONS 4	-----	-----
FIELD CHANGES	-----	-----

SIGNATURE

P.E. NUMBER

DATE

CROCKETT BRIDGE
MUDDY RIVER
CUMBERLAND COUNTY
NAPLES

SUPERSTURCTURE REINF.

SHEET NUMBER

37

OF 44

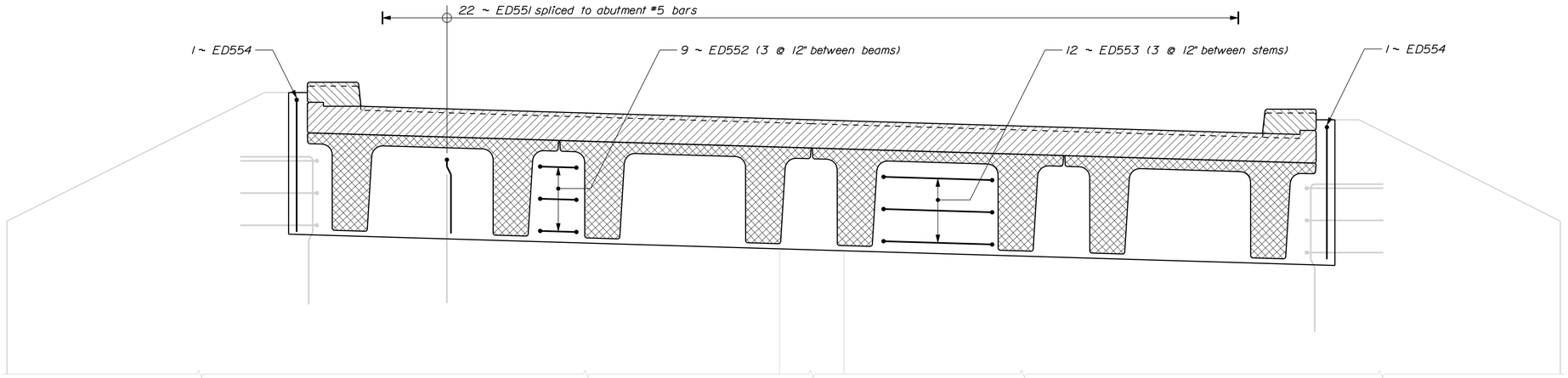

END DIAPHRAGM REINFORCING ELEVATION

Abutment No. 1 Front Face shown; Abutment No. 2 opposite hand

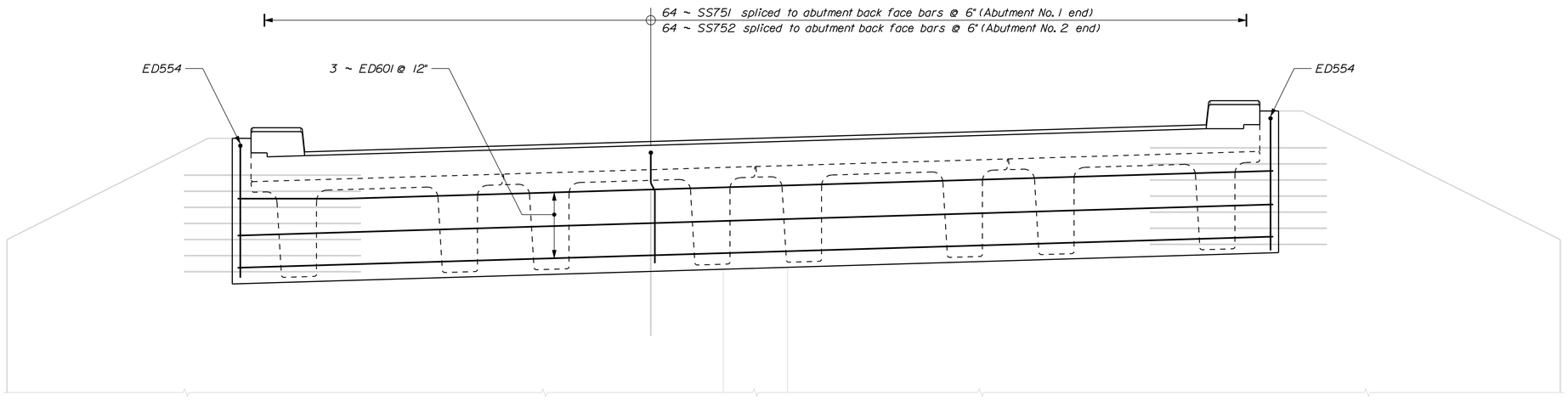

END DIAPHRAGM REINFORCING ELEVATION

Abutment No. 1 Back Face shown; Abutment No. 2 opposite hand

Username: dona.domren Date:4/4/2016

Division: BRIDGE

Filename: ...\MSTA\038_End Diaphragm.dgn

STATE OF MAINE
DEPARTMENT OF TRANSPORTATION

STP-2046(600)

WIN 20466.00

BRIDGE NO. 2199 BRIDGE PLANS

PROJ. MANAGER	M. Parlin		
DESIGN-DETAILED	G. Gustafson	BY	DATE
CHECKED-REVIEWED	------	D. Domren	Mar. 2016
DESIGN2-DETAILED2	------	------	------
DESIGN3-DETAILED3	------	------	------
REVISIONS 1	------	------	------
REVISIONS 2	------	------	------
REVISIONS 3	------	------	------
REVISIONS 4	------	------	------
FIELD CHANGES	------	------	------

SIGNATURE

P.E. NUMBER

DATE

CROCKETT BRIDGE
MUDDY RIVER
NAPLES CUMBERLAND COUNTY

END DIAPHRAGM REINF.

SHEET NUMBER

38

OF 44

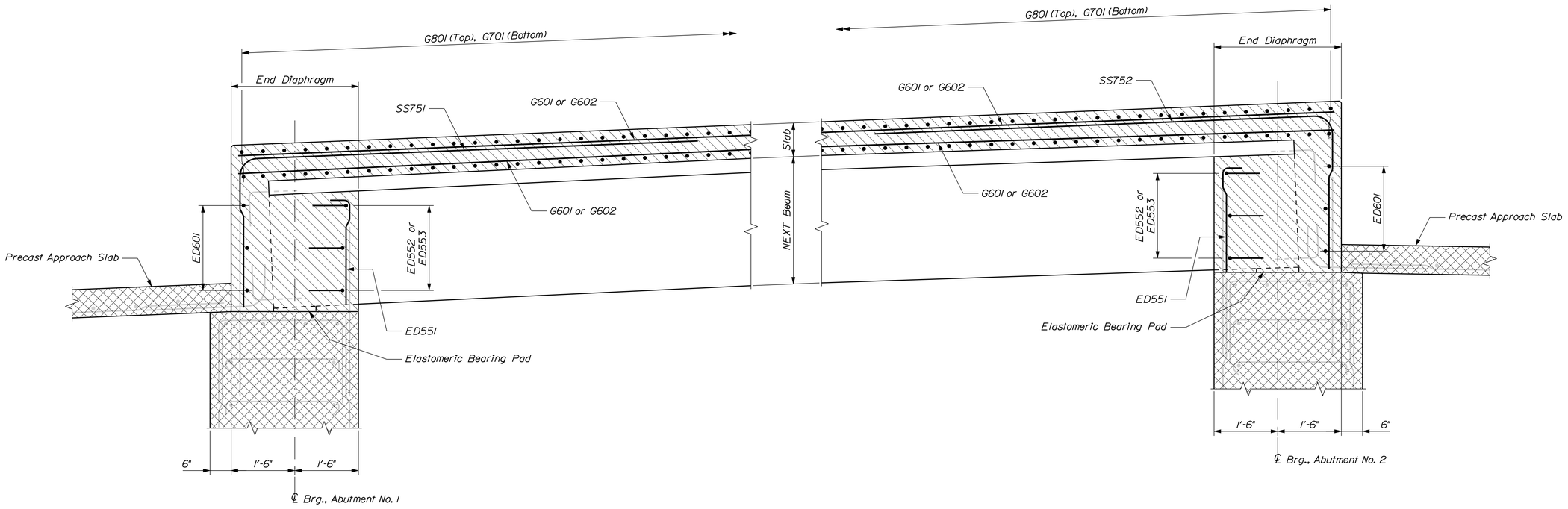

LONGITUDINAL SECTION

Filename: ...\039_Longitudinal Section.dgn Division: BRIDGE Username: dona.domren Date:4/4/2016

STATE OF MAINE
DEPARTMENT OF TRANSPORTATION

STP-2046(600)

WIN 20466.00

BRIDGE NO. 2199

BRIDGE PLANS

PROJ. MANAGER	M. Perlin		
DESIGN-DETAILED	G. Gustafson	BY	DATE
CHECKED-REVIEWED	-----	D. Domren	Mar. 2016
DESIGN2-DETAILED2	-----	-----	-----
DESIGN3-DETAILED3	-----	-----	-----
REVISIONS 1	-----	-----	-----
REVISIONS 2	-----	-----	-----
REVISIONS 3	-----	-----	-----
REVISIONS 4	-----	-----	-----
FIELD CHANGES	-----	-----	-----

SIGNATURE

P.E. NUMBER

DATE

CROCKETT BRIDGE
MUDDY RIVER
NAPLES CUMBERLAND COUNTY

LONGITUDINAL SECTION

SHEET NUMBER

39

OF 44

Filename: ...\00\BRIDGE\MSTA\040_Rebar.dgn Division: BRIDGE Date:4/4/2016 Username: dana.damren

STRAIGHT BARS

MARK	QTY.	LENGTH	LOCATION
ABUTMENTS (Plain Bars)			
A501	6	6'-6"	Vertical - Closure Pour
A511	4	4'-0"	Vertical - Closure Pour
A711	8	5'-4"	Vertical - Closure Pour
SUPERSTRUCTURE (GFRP Composite Bars)			
G501	6	50'-0"	Curbs - Longitudinal
G502	6	35'-8"	Curbs - Longitudinal
G601	95	50'-0"	Deck - Longitudinal
G602	95	36'-0"	Deck - Longitudinal
G701	166	31'-0"	Deck - Transverse
G801	166	31'-0"	Deck - Transverse
END DIAPHRAGMS (Plain Bars)			
ED601	6	32'-0"	Horizontal - Back Face

BENT BARS

MARK	QTY.	LENGTH	TYPE	A	B	C	D	E	F	G	H	O	R	LOCATION
ABUTMENTS (Plain Bars)														
A551	6	4'-10"	S	0	0'-10"	3'-2"	0'-10"	--	--	0	--	--	--	Closure Pour
A651	8	7'-6"	L	6'-6"	1'-0"	--	--	--	--	--	--	--	--	Vertical - Closure Pour
SUPERSTRUCTURE (Stainless Steel Bars)														
SS551	48	5'-1"	SC	0'-6"	1'-3"	1'-3"	1'-2 1/2"	--	--	0'-10"	--	1'-4 3/4"	--	Curb (Low side) - Vertical
SS552	24	5'-2"	SC	0'-6"	1'-3 1/2"	1'-3"	1'-3"	--	--	0'-10"	--	1'-5"	--	Curb (Low side) - Vertical
SS553	44	5'-3"	SC	0'-6"	1'-4"	1'-3"	1'-3 1/2"	--	--	0'-10"	--	1'-5	--	Curb (Low side) - Vertical
SS554	6	5'-5"	SC	0'-6"	1'-5"	1'-3"	1'-4 1/2"	--	--	0'-10"	--	1'-5"	--	Curb (Low side) - Vertical
SS561	48	5'-0"	SC	0'-6"	1'-2"	1'-3"	1'-2 1/2"	--	--	0'-10"	--	1'-4 3/4"	--	Curb (High side) - Vertical
SS562	24	5'-1"	SC	0'-6"	1'-2 1/2"	1'-3"	1'-3"	--	--	0'-10"	--	1'-5"	--	Curb (High side) - Vertical
SS563	44	5'-2"	SC	0'-6"	1'-3"	1'-3"	1'-3 1/2"	--	--	0'-10"	--	1'-5"	--	Curb (High side) - Vertical
SS564	6	5'-4"	SC	0'-6"	1'-4"	1'-3"	1'-4 1/2"	--	--	0'-10"	--	1'-5"	--	Curb (High side) - Vertical
SS651	312	5'-8"	C	0'-8"	5'-0"	0	--	--	--	--	--	--	--	Overhangs
SS751	62	14'-6"	L 1	11'-0	3'-6"	--	--	--	--	--	0'-1 1/2"	--	--	End of Deck at Abutment No. 1
SS752	62	14'-6"	L 2	11'-0	3'-6"	--	--	--	--	--	0'-1 1/2"	--	--	End of Deck at Abutment No. 2
END DIAPHRAGMS (Plain Bars)														
ED551	44	3'-4"	L	0'-10"	2'-6"	--	--	--	--	--	--	--	--	Vertical
ED552	18	2'-11"	S	0	0'-10"	1'-3"	0'-10"	--	--	0	--	--	--	Horizontal
ED553	24	5'-2"	S	0	0'-10"	3'-6"	0'-10"	--	--	0	--	--	--	Horizontal
ED554	4	10'-10"	S	0	4'-2"	2'-6"	4'-2"	--	--	0	--	--	--	Parapets

TYPE - BENDING DIAGRAMS

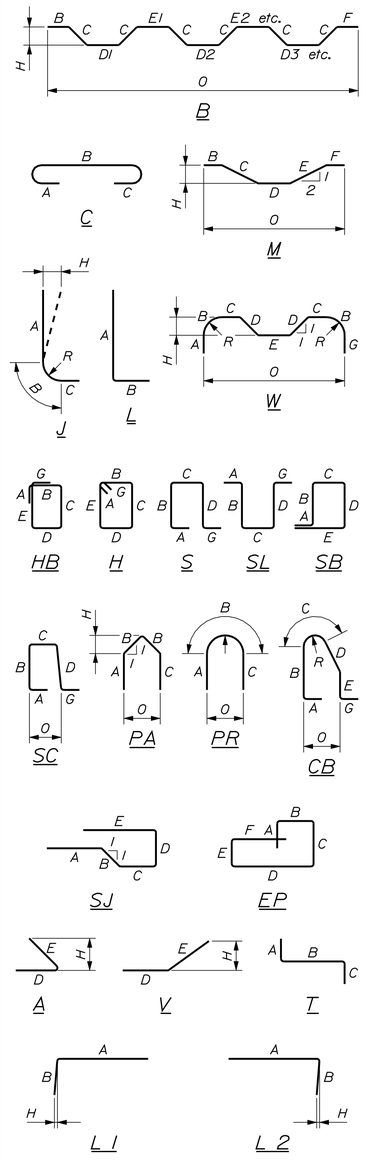

All dimensions are out-to-out of bar.

Bending details and hooks shall conform to the recommendations of the current revision of ACI Standard 315 and ACI Standard 318.

Plain Bars: ASTM A 615/A 615M, Grade 60
Stainless Bars: ASTM A 955, Grade 60
GFRP Bars: CSA S807-10, ACI 440.1R-15

GENERAL NOTES

1. The first two digits following the letter(s) of the mark indicate the size of the bar:

   Mark "A502" = bar size #5
   Mark "P805" = bar size #8
   Mark "S650" = bar size #6

2. Each crank bar, Type B, may be replaced by two (2) straight bars (one top and one bottom) of the same bar size as the crank bar. Payment in either case will be based on crank bars as scheduled on the plans.

STATE OF MAINE
DEPARTMENT OF TRANSPORTATION

STP-2046(600)

WIN 20466.00

BRIDGE PLANS

BRIDGE NO. 2199

PROJ. MANAGER	M. Perlin		
DESIGN-DETAILED	G. Gustafson	DATE	Mar. 2016
CHECKED-REVIEWED	-----	BY	D. Damren
DESIGN2-DETAILED2	-----	SIGNATURE	-----
DESIGN3-DETAILED3	-----		-----
REVISIONS 1	-----	P.E. NUMBER	-----
REVISIONS 2	-----		-----
REVISIONS 3	-----	DATE	-----
REVISIONS 4	-----		-----
FIELD CHANGES	-----		-----

CROCKETT BRIDGE
MUDDY RIVER
CUMBERLAND COUNTY
NAPLES

REINFORCING SCHEDULE

SHEET NUMBER

40

OF 44

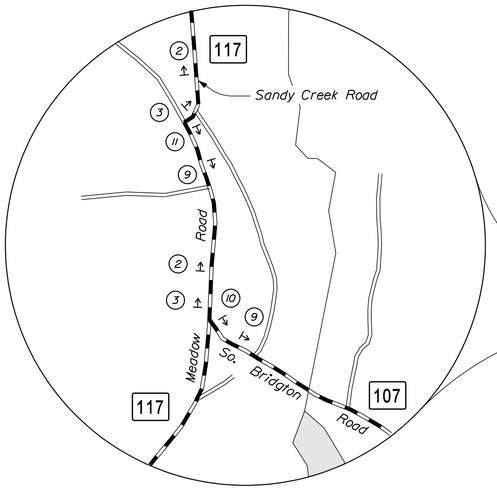

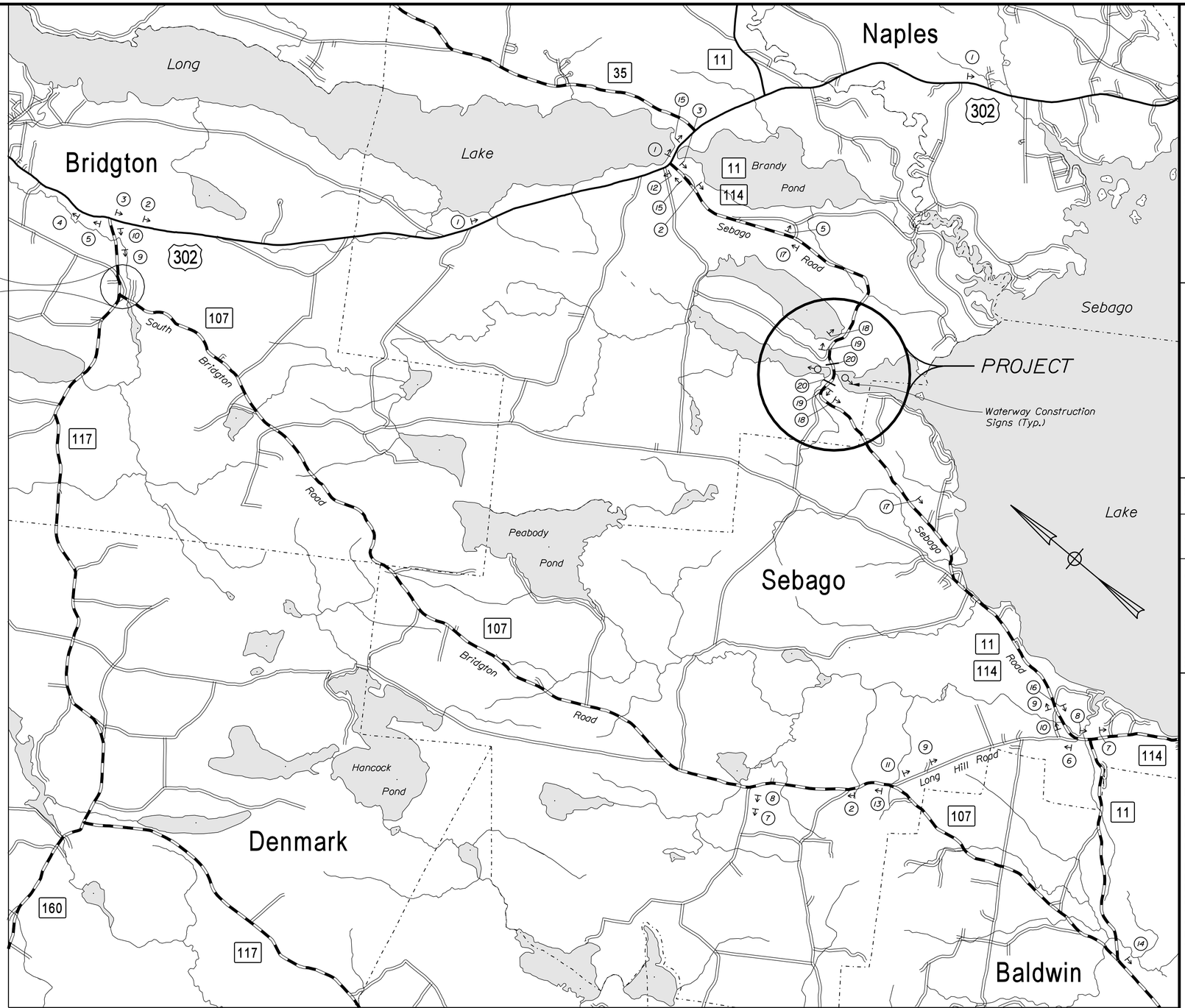

DETOUR PLAN

Scale in MILES

STATE OF MAINE
DEPARTMENT OF TRANSPORTATION

STP-2046(600)

WIN 20466.00

BRIDGE NO. 2199 BRIDGE PLANS

	BY	DATE
PROJ. MANAGER	M. Perlen	
DESIGN-DETAILED	G. Gustafson	Mar. 2016
CHECKED-REVIEWED	D. Domren	-----
DESIGN2-DETAILED2	-----	-----
DESIGN3-DETAILED3	-----	-----
REVISIONS 1	-----	-----
REVISIONS 2	-----	-----
REVISIONS 3	-----	-----
REVISIONS 4	-----	-----
FIELD CHANGES	-----	-----

SIGNATURE

P.E. NUMBER

DATE

CROCKETT BRIDGE
MUDDY RIVER
CUMBERLAND COUNTY
NAPLES

DETOUR PLAN

SHEET NUMBER

41

OF 44

Filename: ...\MSTA\041_Detour Plan.dgn Division: BRIDGE Username: dana.domren Date:4/4/2016

DETOUR SIGNS

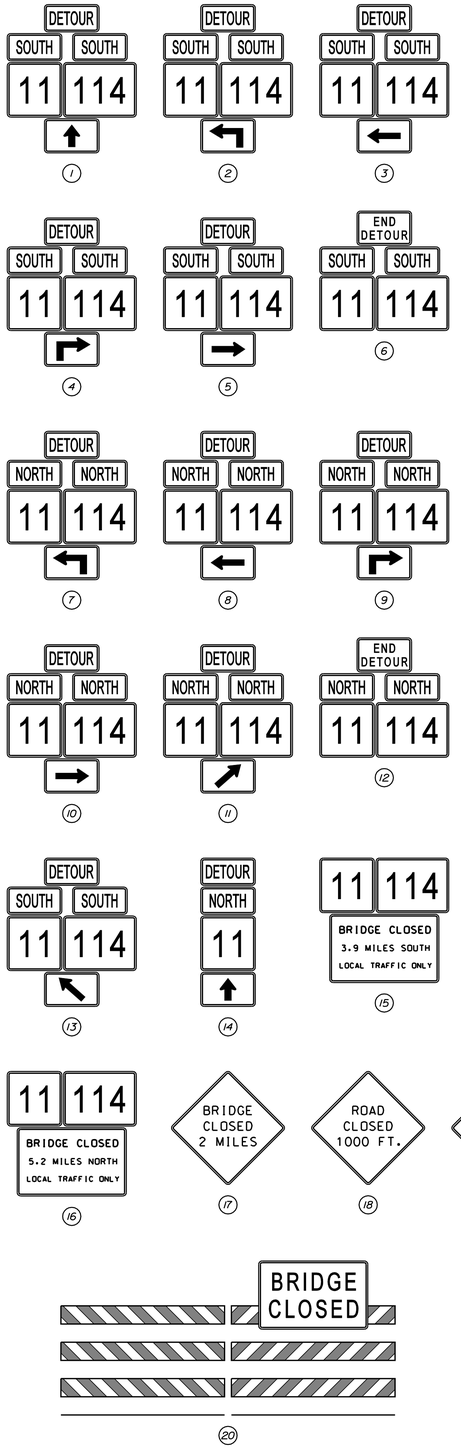

WATERWAY CONSTRUCTION SIGNS

BRIDGE UNDER CONSTRUCTION
FOR YOUR SAFETY, STAY BETWEEN CHANNEL MARKERS AT THE CONSTRUCTION SITE. PASS AT YOUR OWN RISK.

52" x 96"

BRIDGE CLOSING TO PASSAGE ON (DATE / DATES)

52" x 96"

BRIDGE CLOSED TO PASSAGE

52" x 96"

DETOUR NOTES

1. All modifications to traffic control devices shall be in accordance with the Manual on Uniform Traffic Control Devices.

2. Any and all changes and adjustments to traffic control devices shall be included in the Traffic Control Plan submitted, designed and stamped by a Professional Engineer licensed in the State of Maine, and shall be approved by the Resident prior to implementation.

3. The Resident shall approve locations and text on message boards.

4. Cover all conflicting route signs.

5. Install 30 feet of Temporary Concrete Barrier at each end of the project (60 feet total). Payment will be made under Item No. 526.301, Temporary Concrete Barrier.

6. Place Portable Changeable Message Signs in the following locations a minimum of 14 Calendar Days prior to the bridge closure. The final locations and message text shall be at the direction of the Resident.

On US 302 West, 0.10 mile east of ME 11/114
On US 302 East, 0.10 mile west of ME 11/114
On ME 107 North, 0.10 mile south of ME 11
On ME 35 North, 0.10 mile south of ME 114
On ME 114 North, 0.10 mile south of ME 35

WATERWAY CONSTRUCTION NOTES

1. The Contractor shall locate the waterway construction signs near the bridge site, upstream and downstream of the bridge, in the navigation channel and as directed by the Resident. The Contractor shall change or cover waterway construction signs as appropriate.

2. The "BRIDGE CLOSING TO PASSAGE ON ..." waterway construction sign shall be in place a minimum of 14 Calendar Days prior to closure of the bridge to waterway traffic.

STATE OF MAINE
DEPARTMENT OF TRANSPORTATION

STP-2046(600)

WIN 20466.00

BRIDGE NO. 2199

BRIDGE PLANS

		BY	DATE
PROJ. MANAGER	M. Parlin		
DESIGN-DETAILED	G. Gustafson	D. Domren	Mar. 2016
CHECKED-REVIEWED			
DESIGN2-DETAILED2			
DESIGN3-DETAILED3			
REVISIONS 1			
REVISIONS 2			
REVISIONS 3			
REVISIONS 4			
FIELD CHANGES			

SIGNATURE

P.E. NUMBER

DATE

CROCKETT BRIDGE
MUDDY RIVER
CUMBERLAND COUNTY
NAPLES

DETOUR PLAN

SHEET NUMBER

42

OF 44

Filename: ...\MSTA\042_Detour Plan.dgn Division: BRIDGE Username: dona.domren Date:4/4/2016

PLAN LEGEND

Town, County, State	New R/W Along Existing R/W	Sanitary Sewer	Existing / Proposed	Traveled Way	Existing / Proposed	Cut Line C—C—C	Fill Line F—F—F
Approx. Property Lines P.L.	Building / Clearing Limit Line CLL	Telephone Line	Existing / Proposed	Ditch		Stonewall	Retaining Wall
Existing Right of Way	Trees Conifer / Deciduous	Electric Line	Existing / Proposed	Catch Basin		Baseline 10+00 11+00 12+00	
Limits of Wrought Portion L.O.W.P.	Tree Line / Bush Line	Water Line	Existing / Proposed	Manhole		Monument	Traverse Point
Control Of Access C.O.A.	Water Edge	Underdrain Line	Existing / Proposed	Sewer Manhole		Iron Rod Found ● IRF	Pipe Found ● IPF
New Right of Way	Ledge / Rock/Boulder / Flag Pole	Gas Line	Existing / Proposed	Utility Pole		Replacement Pin Set ○	
New Easement	Fence CHAIN LINK / BARB WIRE / STOCKADE	Guardrail	Existing / Proposed	Fire Hydrant			
New Temporary Rights	Sign / Well WELL / Mailbox	Culvert	Existing / Proposed	Curbing			
New R/W Within Existing R/W							

STATE OF MAINE
REGISTRY OF DEEDS
COUNTY _____
RECEIVED _____, _____
at _____h _____m _____M and recorded in
Plan Book _____, Page _____
Attest: _____
REGISTER

THIS PLAN WAS PREPARED IN CONNECTION WITH THE DEPARTMENT'S ACQUISITION OF REAL PROPERTY FOR TRANSPORTATION PURPOSES. IT CANNOT BE USED TO ESTABLISH LEGAL BOUNDARIES BETWEEN ABUTTING PROPERTY OWNERS.

25 0 25 50 75 100
Scale of Feet

PLAN SHOWING
CAMP MATAPONI PROPERTY
FOR FRED GREENBERG
BY EARL HOTCHKISS
DATE - OCTOBER 27, 1983
CUMBERLAND COUNTY REGISTRY OF DEEDS
PLAN BOOK 141, PAGE 49

CONTROL INFORMATION

HORIZONTAL DATUM - US STATE PLANE NAD83(2011)
ZONE - MAINE 2000 WEST ZONE
VERTICAL DATUM - NAVD 88
COMBINED FACTOR - 0.9999688

GRID NORTH
MAINE 2000 WEST ZONE

CAMP REALTY CO., INC.
ITEM NO. (1)
SLOPE EASE. = 862± S.F. (1)
TEMP. CONST. RIGHTS = 195± S.F. (1)
TOTAL AREA = 26.0± AC. (PER TAX MAP)

CURVE DATA
PI = 113+54.24
D = 11°00'00.0"
Δ = 21°23'53.3" Lt.
R = 520.87'
L = 194.53'
T = 98.41'
E = 9.22'

CURVE DATA
PI = 109+60.51
D = 15°00'00.3"
Δ = 27°10'35.6" Lt.
R = 381.97'
L = 181.18'
T = 92.33'
E = 11.00'

CURVE DATA
PI = 111+52.77
D = 4°00'00.0"
Δ = 8°15'31.2" Lt.
R = 1432.39'
L = 206.47'
T = 103.41'
E = 3.73'

PC = STA. 108+68.18
PCC = STA. 110+49.36
PCC = STA. 112+55.83
PT = STA. 114+50.36

MUDDY RIVER
A/K/A SEBAGO COVE

TEMP. CONST. LIMITS
195± S.F.

862± S.F.

TO SEBAGO

HOUSE

BEGIN B.L.

STATE HIGHWAY "126" / ROUTE 114 / SEBAGO ROAD

SEBAGO LAKE

BUILDING
1 STORY WD POST
FND. CAMP BLDG

EXISTING RIGHT OF WAY REFERENCES
1) ROUTE 114
A) MAINE STATE HIGHWAY COMMISSION
PROPOSED RELOCATION OF STATE AID HIGHWAY NO. 5
ACROSS THE LAND OF EUGENE H. LEHMAN ET AL
& PHILLIP CHAPMAN
DATE - MARCH 1932
CUMBERLAND COUNTY REGISTRY OF DEEDS
PLAN BOOK 22, PAGE 38
B) STATE OF MAINE - DEPARTMENT OF TRANSPORTATION
RIGHT OF WAY MAP - STATE AID HIGHWAY "5"
NAPLES CUMBERLAND COUNTY
COMPILED FROM MARCH 1931 PLANS
DATE - JUNE 1993
D.O.T. FILE NO. S-3-207

AS-BUILT INFORMATION
1) MAINE HIGHWAY COMMISSION - BRIDGE DIVISION
CROCKETT BRIDGE OVER MUDDY RIVER
DATE - JANUARY 7, 1930
REEL NO. 5, PLAN 13:198-200

TAX MAP INFORMATION
1) TOWN OF NAPLES
TAX MAPS R1, R6 & U27

CAMP REALTY CO., INC.

PLAN SHOWING
CAMP MATAPONI PROPERTY
FOR FRED GREENBERG
BY EARL HOTCHKISS
DATE - OCTOBER 27, 1983
CUMBERLAND COUNTY REGISTRY OF DEEDS
PLAN BOOK 141, PAGE 49

CROCKETT BRIDGE
OVER
MUDDY RIVER

BRIDGE NO. 2199 WIN 20466.00

TECH	CHECKED
C.W.K.	
G.L.L.	
G.L.L.	N.T.A.
G.L.L.	

ITEM	
EXISTING CONDITION PLAN	G
FINAL RIGHT OF WAY	G
AREAS	G

STATE OF MAINE
DEPARTMENT OF TRANSPORTATION
16 STATE HOUSE STATION - AUGUSTA, ME 04333-0016 - 207-624-3460

NAPLES
RIGHT OF WAY MAP

REVISIONS				PLAN FILED IN PLAN BOOK PAGE COUNTY RECORD					
NO.	DATE	DESCRIPTION	BY	NO.	GRANTOR	INSTRUMENT	DATE	BOOK	PAGE

DAVID BERNHARDT
COMMISSIONER
JOYCE NOEL TAYLOR
CHIEF ENGINEER
DATE

To the best of my knowledge and belief the Highway Right of Way lines depicted hereon are based upon a survey conforming to the Standards of Practice promulgated by the Maine Board of Licensure for Professional Land Surveyors 02-360 CMR, Chapter 90; Exceptions: (1) No separate survey report, (2) Monumentation only as shown on plan. See sheet X of this plan set for coordinates. (3) Other boundary lines, including lines between abutters are approximate and for general reference purposes only.

STATE HIGHWAY "126"
ROUTE 114 / SEBAGO ROAD
NAPLES CUMBERLAND COUNTY
FEDERAL AID PROJECT NO. STP-2046(600)

FEBRUARY 2016 | RIGHT-OF-WAY MAP | D.O.T. FILE NO. 3-607
SCALE 1" = 25' | SHEET 1 OF 2

SHEET NUMBER
43
OF 44

Filename: ...\00\ROW\MSTA\043_RWPLAN1.dgn Division: BRIDGE Username: dono.domren Date:4/4/2016

PLAN LEGEND

Town, County, State	New R/W Along Existing R/W	Sanitary Sewer	Traveled Way	Cut Line C—C—C	Fill Line F—F—F
Approx. Property Lines P.L.	Building	Clearing Limit Line CLL	Telephone Line	Ditch	Stonewall	Retaining Wall
Existing Right of Way	Trees Conifer	Deciduous	Electric Line	Catch Basin	Baseline 10+00 11+00 12+00	
Limits of Wrought Portion L.O.W.P.	Tree Line	Bush Line	Water Line	Manhole	Monument	Traverse Point
Control Of Access C.O.A.	Water Edge		Underdrain Line	Sewer Manhole	Iron Rod Found ● IRF	Pipe Found ● IPF
New Right of Way	Ledge	Rock/Boulder	Flag Pole	Gas Line	Utility Pole	Replacement Pin Set ○	
New Easement	Fence CHAIN LINK	BARB WIRE	STOCKADE	Guardrail	Fire Hydrant		
New Temporary Rights	Sign	Well WELL	Mailbox	Culvert	Curbing		
New R/W Within Existing R/W							

Existing	Proposed
	T
	E
	W
	G

STATE OF MAINE
REGISTRY OF DEEDS
COUNTY _____
RECEIVED _____, _____
at _____h _____m _____M and recorded in
Plan Book _____, Page _____
Attest: _____
REGISTER

THIS PLAN WAS PREPARED IN CONNECTION WITH THE DEPARTMENT'S ACQUISITION OF REAL PROPERTY FOR TRANSPORTATION PURPOSES. IT CANNOT BE USED TO ESTABLISH LEGAL BOUNDARIES BETWEEN ABUTTING PROPERTY OWNERS.

25 0 25 50 75 100
Scale of Feet

CONTROL INFORMATION

HORIZONTAL DATUM - US STATE PLANE NAD83(2011)
ZONE - MAINE 2000 WEST ZONE
VERTICAL DATUM - NAVD 88
COMBINED FACTOR - 0.9999688

GRID NORTH
MAINE 2000 WEST ZONE

CURVE DATA
PI = 113+54.24
D = 11°00'00.0"
Δ = 21°23'53.3" Lt.
R = 520.87'
L = 194.53'
T = 98.41'
E = 9.22'

FLOW
MUDDY RIVER
A/K/A SEBAGO COVE

GORDON T. GAUNTLETT, JR.
ANDREA GAUNTLETT
ITEM NO. (3)
DRAINAGE EASE. = 990± S.F. (1)
SLOPE EASE. = 720± S.F. (1)
TEMP. CONST. RIGHTS = 150± S.F. (1)
TOTAL AREA = 6.5± AC. (PER TAX MAP)

CURVE DATA
PI = 119+35.45
D = 11°00'00.0"
Δ = 21°40'00.0" Lt.
R = 520.87'
L = 196.97'
T = 99.68'
E = 9.45'

SWAN LAKE POND

PT = STA. 121+84.91

PT = STA. 120+32.74

PT = STA. 114+50.36

PC = STA. 118+35.77

OUTLET DRAINAGE STRUCTURE
STA. 116+42± LT. TO STA. 116+90± LT.

TEMP. CONST. LIMITS
150± S.F.

720± S.F.

990± S.F.

114+00 194.53'

115+00

116+00

117+00

118+00 385.42' N39°54'05"E

119+00 196.97'

120+00

121+00 TO U.S. ROUTE 302

END B.L.

STATE HIGHWAY "126" / ROUTE 114 / SEBAGO ROAD

SLOPE EASE. LIMITS

0.12± AC.

0.08± AC.

RICHARD W. MURRAY
KARENA L. MURRAY
ITEM NO. (4)
SLOPE EASE. = 0.08± AC. (1)
TOTAL AREA = 7.23± AC. (CALC.)

LAKE SEBAGO ESTATES HOMEOWNERS ASSOCIATION
ITEM NO. (2)
SLOPE EASE. = 0.12± AC. (1)
TOTAL AREA = 4.0± AC. (PER SUBDIVISION PLAN)

PLAN OF
LAKE SEBAGO ESTATES
FOR PATTEN CORPORATION OF MAINE
COMPILED BY MAIN-LAND DEVELOPMENT CONSULTANTS INC.
DATE - JUNE 1, 1987
CUMBERLAND COUNTY REGISTRY OF DEEDS
PLAN BOOK 166, PAGE 53 - 4 SHEETS

SEBAGO LAKE

To Sebago Lake

EXISTING RIGHT OF WAY REFERENCES
1) ROUTE 114
A) MAINE STATE HIGHWAY COMMISSION
PROPOSED RELOCATION OF STATE AID HIGHWAY NO. 5
ACROSS THE LAND OF EUGENE H. LEHMAN ET AL
& PHILLIP CHAPMAN
DATE - MARCH 1932
CUMBERLAND COUNTY REGISTRY OF DEEDS
PLAN BOOK 22, PAGE 38
B) STATE OF MAINE - DEPARTMENT OF TRANSPORTATION
RIGHT OF WAY MAP - STATE AID HIGHWAY "5"
NAPLES, CUMBERLAND COUNTY
COMPILED FROM MARCH 1931 PLANS
DATE - JUNE 1993
D.O.T. FILE NO. S-3-207

AS-BUILT INFORMATION
1) MAINE HIGHWAY COMMISSION - BRIDGE DIVISION
CROCKETT BRIDGE OVER MUDDY RIVER
DATE - JANUARY 7, 1930
REEL NO. 5, PLAN 13:198-200

TAX MAP INFORMATION
1) TOWN OF NAPLES
TAX MAPS R1, R6 & U27

CROCKETT BRIDGE
OVER
MUDDY RIVER

BRIDGE NO. 2199 WIN 20466.00

TECH	CHECKED
G.L.L.	C.W.K.
G.L.L.	
G.L.L.	N.T.A.

ITEM
EXISTING CONDITION PLAN
FINAL RIGHT OF WAY
AREAS

STATE OF MAINE
DEPARTMENT OF TRANSPORTATION
16 STATE HOUSE STATION - AUGUSTA, ME 04333-0016 - 207-624-3460

NAPLES
RIGHT OF WAY MAP

REVISIONS			
NO.	DATE	DESCRIPTION	BY

PLAN FILED IN PLAN BOOK PAGE COUNTY RECORD

NO.	GRANTOR	INSTRUMENT	DATE	BOOK	PAGE

DAVID BERNHARDT
COMMISSIONER
JOYCE NOEL TAYLOR
CHIEF ENGINEER
DATE

To the best of my knowledge and belief the Highway Right of Way lines depicted hereon are based upon a survey conforming to the Standards of Practice promulgated by the Maine Board of Licensure for Professional Land Surveyors 02-360 CMR, Chapter 90; Exceptions: (1) No separate survey report, (2) Monumentation only as shown on plan. See sheet X of this plan set for coordinates. (3) Other boundary lines, including lines between abutters are approximate and for general reference purposes only.

STATE HIGHWAY "126"
ROUTE 114 / SEBAGO ROAD
NAPLES CUMBERLAND COUNTY
FEDERAL AID PROJECT NO. STP-2046(600)

FEBRUARY 2016 | RIGHT-OF-WAY MAP | D.O.T. FILE NO. 3-607
SCALE 1" = 25' | SHEET 2 OF 2

SHEET NUMBER
44
OF 44

Filename: ...\00\ROW\MSTA\044_RWPLAN2.dgn Division: BRIDGE Username: dono.domren Date:4/4/2016